Stefan | 10072FTOI

Job Name:_____ Job Type:_____ Quantity:_____ Comments:_____

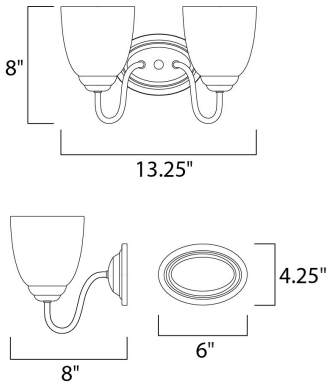

Measurements:

Height	Width	Extension
8.00''	13.25''	4.20''
BP Height	BP Width	
6.00''	4.25''	
Hanging Weight		
2.87 lb		

Lamping:

Incandescent MB Incandescent

2.00 60W MB Incandescent

120 total watt

Dimmable : Standard Dimmer

0 Rated Lumens

Color Temperature

Shipping:

Carton Weight	Carton Width	Carton Height	Carton Length
4.01 lb	9.00''	6.00''	14.75''
Master Pack Qty	UPC	UPS	
1.0000	783209108431	Yes	

Finish:

Oil Rubbed Bronze OI

Glass:

Frosted FT

Material:

Steel

Certification:

Damp Location

Additional:

MB Incandescent (Not Included)
Lighting Direction: BOTH

253 NORTH VINELAND AVE. | CITY OF INDUSTRY, CA 91746
T. 626.956.4200 | F. 626.956.4225

maximlighting.com
#Maximlighting

Always consult a qualified, licensed electrician before installation of any products....