RACO® Steel Boxes and Covers

Applications: Steel Boxes

RACO® high-quality steel boxes:

- Are used in branch circuit wiring
- Accommodate wiring devices, such as switches and receptacles
- Most may also serve as fixture supports
- Provide excellent protection for wiring system or devices
- Must be closed with a cover, light fixture canopy or wallplate
- Permit access to conductors for maintenance
- Allow for branch circuit runs
- Provide two-hour fire rating for 4x4 or smaller wall opening

Product Features: Outlet Boxes for Fixture or Fan Support

These high-quality boxes:

- Are listed to support lighting fixture canopies or fans
- Feature oversized #10 screws to provide strength and rigidity

Product Features: Patented TKO® Knockouts

- TKO® knockouts offer greater flexibility with RACO® * combination 1/2" and 3/4" knockout
- Stock just one product instead of two or three
- One product for the installer to carry

*U.S. Patent has expired.

TKO® Provides Reliable Grounding Path

- Independent tests conducted by UL prove that the TKO® passes the same high-current fault test used to test grounding bushings and ground lugs
- RACO® TKO® knockout is UL Listed, providing bonding without the use of bonding jumpers
- Suitable for bonding without any additional bonding means around concentric (or eccentric, TKO) knockouts where used in circuits above or below 250V
- This knockout does not impair the electrical connection to ground

Most Raco® Boxes Have At Least One Tapped #10-32 Grounding Hole

- The products that do not have a grounding hole are: plenum boxes catalog numbers 226 and 239

Product Features: Combination Screw Heads

- Cover and clamp screws have combination slotted/Phillips heads
- Self-tapping screws provide for 100% thread engagement

Metallic Boxes: Fire Resistance Rating Wall Penetrations*

Listed single- and double-gang metallic outlet and switch boxes with metallic or nonmetallic cover plates, also 4x4 and octagon boxes may be used in bearing and non-bearing wood stud and steel stud walls with ratings not exceeding two hours.

The surface area of individual metallic outlet or switch boxes shall not exceed 16 square inches through a fire rated wall. The aggregate surface area of the boxes shall not exceed 100 square inches per 100 square feet. Boxes located on opposite sides of walls or partitions shall be separated by a horizontal distance of 24 inches.

The metallic outlet or switch boxes shall be securely fastened to the studs, and the opening in the wallboard facing shall be cut so that the clearance between the box and the wallboard does not exceed 1/8 inch.

*Reference: UL Fire Resistance Directory (Orange Book)

Standard Material: Steel Covers, Outlet And Switch Boxes

- Steel boxes and covers are made of .0625 inch thick pre-galvanized sheet steel
- Handy Box covers are made of .030 inch thick galvanized sheet steel

Compliances

RACO® steel boxes and covers generally carry the following compliance ratings. Check specific catalog pages for individual compliances.

- UL Listed – Standard 514-A, file E195978 ("QCIT" Category)
- Boxes are listed for their Electrical Applications (electrical codes), UL Green Book
- Boxes are listed for mechanical properties, including the Two-Hour Fire Rating, (building codes) UL Orange Book
- CSA Certified – C22.2 #18, CSA File LR-1082
- U.S. Federal Specification and Standards W-J-800
- ANSI/NEMA OS1
- Federal Manufacturer's number 28488

Reference Data

- TKO® knockout U.S. Patent 4,640,433; Canada Patent 1,260,597
- Ceiling fan outlet box U.S. Patent 4,892,211; Canada Patent 1,324,360; Mexico Patent 166,125
- Far-side support (#978) U.S. Patent 4,898,357
- Box-Loc® U.S. Patent 5,408,045 MEXICO Patent 186848
- Adjust-A-Brace® U.S. Patent 5,330,137 and 5,927,667 U.S.
- Steel Stud box Support (#978) 4,898,357 U.S.
- W.P. self tap holes 4,898,453 U.S. and 4,906,206 U.S.

For installation guidelines and to learn more about RACO products, visit the NEMA website at *http://www.nema.org*. The National Electrical Manufacturers Association (NEMA) website is a valuable electrical resource providing the information you need - quickly.

RACO® UL Guide Cards

You can download and print out any or all UL Guide Cards issued to RACO. Just go to the RACO website at *www.hubbell-raco.com* and click on the UL symbol. Every RACO UL guide card is listed by product category. Click on the live link (right hand column in blue type) and the UL Guide Card will appear. Save to your computer or print it out.

UL Guide Information Pages

UL publishes the most frequently asked questions concerning product ratings, configurations, installations, uses allowed or not allowed, grounding and bonding, and much more. Each UL category has a unique Guide Information Page. Live links to each UL Guide Information Page appears just below the RACO UL guide card for each product category.

Wiring Capacity: Steel Outlet And Switch Boxes; Cubic Inches

Maximum Number of Conductors or Minimum Size Box Required – National Electrical Code Article 314.16 (A and B) also table 314.16(A)

The purpose of NEC Article 314.16 is to determine the maximum conductor count or the minimum box size required for an application. It also may be used to determine how many other conductors may be added without exceeding the Code-prescribed limit. Most applications have determined the number of conductors. The question that then remains is the smallest (minimum) size box that is permitted. The rules of Article 314.16 are to be used to determine the Code-recognized limit.

Selection of an outlet or junction box for use in an electrical circuit work must take into consideration the maximum number of wires permitted in the box. Safe electrical practice demands that wires not be jammed into boxes because of the possibility of nicks, abrasions or other damage to the insulating material, creating the potential for ground faults or short circuits.

Article 314 – Boxes and Fittings

NEC 314.16 (A and B) also table 314.16(A). Number of Conductors in Outlet, Device, and Junction Boxes, and Conduit Bodies.

Boxes shall be of sufficient size to provide free space for all enclosed conductors. In no case shall the volume of the box, as calculated in (a) below, be less than the fill calculation as calculated in (b) below. The minimum volume for conduit bodies shall be as calculated in (c) below.

The provisions of this section shall not apply to terminal housings supplied with motors. See Section 430-12.

Boxes and conduit bodies enclosing conductors, size #4 or larger, shall also comply with the provisions of Section 314-28.

(a) Box Volume Calculations. The volume of a wiring enclosure (box) shall be the total volume of the assembled sections, and, where used, the space provided by plaster rings, domed covers, extension rings, etc., that are marked with their volume in cubic inches or are made from boxes the dimensions of which are listed in Table 314-16(A).

(1) Standard Boxes. The volume of standard boxes that are not marked with a cubic inch capacity shall be as given in *Table 314-16(A).

(2) Other Boxes. Boxes 100 cubic inches (1,640 cu. cm^3.) or less, other than those described in table, and nonmetallic boxes shall be durably and legibly marked by the manufacturer with their cubic inch capacity. Boxes described in table that have a larger cubic inch capacity than is designated in the table shall be permitted to have their cubic inch capacity marked as required by this section.

(b) Box Fill Calculations. The volumes in paragraphs (1) through (5) below, as applicable, shall be added together. No allowance shall be required for small fittings such as locknuts and bushings.

(1) Conductor Fill. Each conductor that originates outside the box and terminates or is spliced within the box shall be counted once, and each conductor that passes through the box without splice or termination shall be counted once. The conductor fill, in cubic inches, shall be computed using Table 314.16(B)(1). A conductor, no part of which leaves the box, shall not be counted.

Exception: Where an equipment grounding conductor or not over four fixture wires smaller than #14, or both, enter a box, from a domed fixture or similar canopy and terminate within that box, it shall be permitted to omit these conductors from the calculations.

(2) Clamp Fill. Where one or more internal cable clamps, whether factory or field supplied, are present in the box, a single volume allowance in accordance with NEC 314.16(B)(2) shall be made based on the largest conductor present in the box. No allowance shall be required for a cable connector with this clamping mechanism outside the box.

(3) Support Fittings Fill. Where one or more fixture studs or hickeys are present in the box, a single volume allowance in accordance with NEC 314.16(B)(3) shall be made for each type of fitting based on the largest conductor present in the box.

(4) Device or Equipment Fill. For each yoke or strap containing one or more devices or equipment, a double volume allowance in accordance with NEC 314.16(B)(4) shall be made for each yoke or strap based on the largest conductor connected to a device(s) or equipment supported by that yoke or strap.

(5) Equipment Grounding Conductor Fill. Where one or more equipment grounding conductor(s) enter(s) a box, a single volume allowance in accordance with Table 314.16B shall be made based on the largest equipment grounding conductor present in the box. Where an additional set of equipment grounding conductors, as permitted by NEC 314.16(B)(5) are present in the box, an additional volume allowance shall be made based on the largest equipment grounding conductor in the additional set.

MOST OFTEN REQUESTED ARTICLES OF THE 2008 NATIONAL ELECTRICAL CODE®	HOW RACO® PRODUCTS HELP COMPLETE THE INSTALLATION
250-97 (d) Method of Bonding Service Equipment — Bonding Jumpers. Bonding jumpers are not required for concentric and eccentric knockouts if they are listed for the purpose.	This Article is used to ensure that there is ground continuity when a concentric or eccentric knockout is encountered. A bonding jumper is not required when using any of the RACO® patented TKO® knockout boxes, Catalog Numbers 189, 232, etc.
314-27 (A) Boxes at Lighting Fixture Outlets. Boxes to support light fixtures must be listed for fixture support. Exception: Device boxes are allowed to support wall mounted fixtures not over 6 lbs.	Device boxes use #6-32 screws to secure devices such as snap-switches and receptacles. They are not suitable for support of other than very lightweight lighting fixtures, such as some wall-bracket types. See Article 410-16. All RACO® 4" and 4-11/16" square boxes are listed for fixture support.
314.27 (C) Floor Boxes. Boxes listed specifically for this application shall be used for receptacles located in the floor. Exception: Boxes located in elevated floors of show windows and similar locations where the authority having jurisdiction judges them free from physical damage, moisture and dirt.	Only boxes that are UL Listed for the application may be fastened into the floor. RACO® floor boxes are in Section E of this catalog.
314.27 (D) Boxes at Fan Outlets. Boxes that support ceiling fans must be listed for that purpose.	For any ceiling outlet that is intended to have a ceiling (paddle) fan installed, a UL Listed outlet box rated for ceiling fan support must be installed. RACO® offers a complete line of products designed for various applications and mounting needs.
314.16 (A) Space for Conductors. Canopies and outlet boxes taken together shall provide adequate space so that fixture conductors and their connecting devices can be properly installed.	When calculating the minimum cubic inch requirements for an outlet box, the canopy may be included in the calculation at the discretion of the Authority Having Jurisdiction. If the canopy of the fixture/fan is marked with the cubic inch capacity, then the additional volume must be accepted by the Authority Having Jurisdiction.
314.27 (B) Maximum Luminaire Weight. Fixtures greater than 50 pounds cannot be supported by a fixture box unless the box has been listed for a heavier load.	All outlet boxes that are intended to be used with fixtures are tested in accordance with UL Standard 514-A.
250.146 (A) Receptacles in Raised Covers. A bonding jumper is no longer required for raised covers. However, (1) a cover with flat corners, (2) two device attachment screws, and (3) A lock washer or equivalent is required.	This new method provides better bonding for the cover than the bonding wire did. RACO flat corner covers and mud rings comply.

MOST OFTEN REQUESTED ARTICLES OF THE 2008 NATIONAL ELECTRICAL CODE®	HOW RACO® PRODUCTS HELP COMPLETE THE INSTALLATION
314.27 (D) Support of Ceiling Fans. **(a) Ceiling Fans 70 lbs. or Less.** Listed ceiling fans that do not exceed 35 pounds in weight, with or without accessories, shall be permitted to be supported by outlet boxes identified for such use. (1) Boxes that can support more than 35 pounds must be marked with the maximum fan weight they are listed for. **(b) Ceiling Fans Exceeding 35 lbs.** (1) Boxes that can support more than 35 pounds must be marked with the maximum fan weight they are listed for.	Unless otherwise marked, a UL Listed outlet box listed for ceiling fan support can support a maximum of 35 pounds. All of RACO® steel fan outlet boxes use hardened #10-32 screws for support of the fan. Captive star lock-washers prevent the screws from loosening, providing a safe and secure installation.
800.133 Exception (c) Installation of Communications Wires, Cables and Equipment — Electric Light or Power Circuits. Communications conductors shall not be placed in any raceway, compartment, outlet box, junction box, or similar fitting with conductors of electric light or power circuits or Class 1 circuits.	When power and voice/data are brought to one enclosure, a means of dividing the wiring is required. Voltage barriers are available on the following box types: 4"and 4-11/16" square boxes, three- and four-gang switch boxes, masonry boxes, and gang boxes.
406.11 Tamper-resistant Receptacles in Dwelling Units. In all areas specified in 210.52, all 125 volt, 15 and 20 amp receptacles shall be listed tamper-resistant receptacles.	This is to prevent shocks ot small children that like to insert keys, paper clips, etc. into the receptacle slots.
NEC 314.24 Minimum depth of boxes for outlets, devices, and utilization equipment.	Boxes must be a minimum depth depending on their use and/or are required to have a minimum clearance behind the device or equipment of 1/4 inch.

STEEL BOX SELECTION CHART

CU. IN.	42.0	30.3	29.5	21.5	21.0	18.0	16.5
CONDUIT STEEL BOXES							
	4-11/16" Sq. 2-1/8" Deep INSIDE	4" Sq. 2-1/8" Deep INSIDE	4-11/16" Sq. 1-1/2" Deep INSIDE	4" Oct. 2-1/8" Deep INSIDE	4" Sq. 1-1/2" Deep INSIDE	Switch 3-1/2" Deep OUTSIDE	Handy 2-1/8" Deep INSIDE

CU. IN.	15.5	14.0	13.0	12.5	6.0
CONDUIT STEEL BOXES					
	4" Oct. 1-1/2" Deep INSIDE	Switch 2-3/4" Deep OUTSIDE	Handy 1-7/8" Deep OUTSIDE	Switch 2-1/2" Deep OUTSIDE	4" Rnd. Pan 1/2" Deep INSIDE

CU. IN.	30.3	21.5	21.0	18.0	15.8
CABLE STEEL BOXES					
	4" Sq. 2-1/8" Deep INSIDE	4" Oct. 2-1/8" Deep INSIDE	4" Sq. 1-1/2" Deep INSIDE	Switch 3-1/2" Deep OUTSIDE	Switch 2-9/64" Deep OUTSIDE

	15.5	14.0	12.5	4.0
	4" Oct. 1-1/2" Deep INSIDE	Switch 2-3/4" Deep OUTSIDE	Switch 2-1/2" Deep OUTSIDE	3-1/2" Pan 1/2" Deep INSIDE

BOX SELECTION

Calculate The Minimum Size Box

NEC 314.16 (A and B) describes the detailed way of counting wires, as well as clamps, fittings or devices (i.e., switches, receptacles, combination devices) — by establishing an equivalent conductor value for each. Those values are added together to get a total number of conductors. The minimum size box is the smallest one in Table 314.16(A) that can accommodate that number of conductors.

1. No matter how many ground wires come into a box, they only count as one conductor within the box.
2. Any wire running unbroken through the box counts as one wire.
3. Each wire coming into a splice device (crimp or twist-on type) is counted as one wire.
4. Each wire coming into the box and connecting to a device counts as one wire of that size.
5. Fixture studs, cable clamps and hickeys are to be counted as one regardless of how many there may be. If a box contains two cable clamps, the total is only to be increased by one.
6. Where devices are mounted in the box, the total conductor count must be increased by two for each mounting strap.

Example #1: — Conduit Boxes:
Supply power to a switch that will control a remote light with #14 conductors. Metal conduit and fittings will be used as the wire way. You must provide space for four conductors and one switch, totaling 6. Read across the line "Deductions" in the **Box Fill Table** to column 6, then read down to the minimum cubic inches required for #14 conductor. This example requires a minimum of 12.0 cubic inches.

Example #2: — Cable Boxes:
This example will illustrate how the minimum size is determined for a box with cable clamps fed by two #12-2 nonmetallic sheathed cables and supplying a 15A duplex receptacle. After supplying the receptacle, the conductors are extended to other outlets.

Circuit conductors	4
Ground conductors	1
Cable clamps	1
Device (receptacle)	2
Total	**8**

Using the **Box Fill Table** below, read across the line "deductions" to column 8, then down to the minimum cubic inches required for #12 conductor. This example requires a minimum of 18.0 cubic inches.

BOX FILL TABLE

DEDUCTIONS		6	7	8	9	10	11	12	13	14
Volume Required per Conductor Size per Deductions	#18 (1.50)	9.00	10.50	12.00	13.50	15.00	16.50	18.00	19.50	21.00
	#16 (1.75)	10.50	12.25	14.00	15.75	17.50	19.25	21.00	22.75	24.50
	#14 (2.00)	12.00	14.00	16.00	18.00	20.00	22.00	24.00	26.00	28.00
	#12 (2.25)	13.50	15.75	18.00	20.25	22.50	24.75	27.00	29.25	31.50
	#10 (2.50)	15.00	17.50	20.00	22.50	25.00	27.50	30.00	32.50	35.00
	#8 (3.00)	18.00	21.00	24.00	27.00	30.00	33.00	36.00	39.00	42.00
	#6 (5.00)	30.00	35.00	40.00	45.00	50.00	55.00	60.00	65.00	70.00

CLAMP TECHNICAL DATA AND STUD TYPE

CLAMP TYPE	RACEWAY TYPE					
	ARMORED CABLE (BX)		METAL CLAD CABLE INTERLOCKING (MCI)		NONMETALLIC SHEATHED CABLE	FLEXIBLE METAL CONDUIT
	STEEL	ALUMINUM	STEEL	ALUMINUM		
"L" TYPE					#14-2 to #10-3 w/ground	
"X" TYPE	#14-2 (.444 in outer diam.) to largest size to fit in clamp	#14-2 (.444 in outer diam.) to largest size to fit in clamp	.425 to .600 outer diam.	.400 to .495 outer diam.		3/8" trade size
"#9 OR AOL" TYPE					#14-2 w/ground	
"BN" TYPE					#14-2 to #10-3 w/ground	
"Q" TYPE					#14-2 w/ground or #12-2 w/ground	

"L" TYPE

"X" TYPE

"#9 or AOL" TYPE

"BN" TYPE

"Q" TYPE

KNOCKOUTS AND PRIOUTS

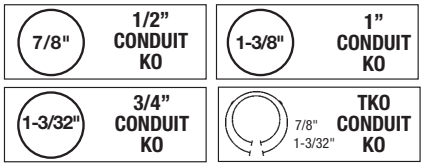

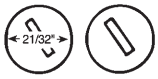

CABLE PRIOUTS
Always in pairs.

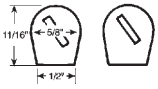

FLAT-BOTTOMED CABLE PRIOUTS
Eliminate chance of cable being cut.

PLASTER EARS

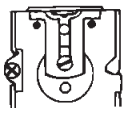
ONE-SCREW EAR

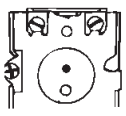
TWO-SCREW EAR

Adjustable plaster ears are included on many switch boxes and one octagon box. They are set forward 1/32".

HUBBELL RACO

BRACKET TECHNICAL DATA

BRACKET TYPE	"A"	"B"	"D"	"FA"	"FH"	"FM"	"J"	"LB"	"MS"	"TS"	"W"	"H" or "M"
LENGTH	6-7/16"	1-61/64"	6-1/4"	5-1/2"	7-3/8"	6-7/8"	2-3/8"	1-31/32"	4-1/2"	7"	6-25/32"	4-15/16"
WIDTH	5/8"	2"	21/32"	2-1/4"	1-9/16"	1-9/16"	2-23/32"	3-3/64"	1-1/2"	1-1/16"	1-1/16"	7/8"
OFFSET					3/8"	3/8"	1/4"			17/64"	1-5/16"	3/8"
FOR METAL	✓		✓	✓		✓			✓	✓	✓	✓
FOR WOOD	✓	✓	✓	✓	✓	✓	✓	✓		✓	✓	✓

"A" Bracket
Positions handy box against face and side of stud.

"FH" Bracket
Side-mount bracket with hooks that drive into face of stud.

BOX-LOC® "MS" Bracket
Positions box on either side of stud. BOX-LOC® (MS) Bracket Box is a snap to install. Place the bracket on the open side of the stud first. Slots in the bracket engage the lip of the stud and actually crimp it as you press the bracket on the stud. Barbed hooks dig into the flat side of the stud, quickly locking it into place.

"UBS" Support
Universal Back Side support to provide bracing on back of box for wall cavities 2-1/2" - 6" thick.

"B" Bracket
Face mounts on front edge of wood stud. Use when space between studs is limited.

"FM" Bracket
Mounts on flat side of stud.

"TS" Bracket
Side-mount bracket for octagon, square, switch and handy boxes. Gauging tabs and recessed nailing spurs.

"D" Bracket
Mounts on flat side of stud.

"J" Bracket
Spurs, slotted holes for toe-nailing. Gauging notches at 3/8" and 1/2".

"W" Bracket
Positions box away from side of stud to clear the trim molding of a door frame.

"FA" Bracket
Allows box to be flush mounted to stud or joist.

"LB" Bracket
Face mounts on front edge of wood stud. Use when space between studs is limited. 5/8" offset to clear narrow door molding.

"H" Bracket
Narrow bracket allows side-by-side mounting on stud. Positioning tabs locate box perfect distance from stud. V notch centers box. Dimples protect flush drywall installation.

"M" Bracket
Brackets on both/opposite sides of box

Application

- The RACO® 7120, and 7120-1 are premium boxes for rugged new work, old work ceiling fan and fixture installations

Product Features

- The 7120, and 7120-1 are made of heavy-duty engineered polycarbonate plastic 7120VB for vapor barrier applications
- Rated for 70 pound ceiling fan and 210 pound fixture support
- Self-gripping wire entry clamps
- Grips the joist for hands free positioning and installation
- Designed to accommodate 1/2" thick drywall
- Mounting hardware and instructions included

Reference Data

- Cable clamp U.S. Patent 4,874,905 & 4,605,816; Canada Patent 1,233,900
- Mounting holes U.S. Patent 4,580,689; Canada Patent 1,237,515
- Hex device holes U.S. Patent 4,666,055; Canada Patent 1,260,599
- Cat. #7120 U.S. Patent 5,234,119; Mexico Patent 179,825

Compliances

- UL – Standard 514-C, File E104681 and R9320
- RACO® 7120, 7120-1 and 7120VB are UL listed for nonmetallic wiring systems
- Boxes are listed for their Electrical Applications (Electrical Codes), UL Green Book
- Boxes are listed for mechanical properties, including the 2-hr. Fire Rating, (building codes) UL Orange Book
- Federal Manufacturer's number 28488

7120VB

7120-1
SADDLE BOX®

7120
SADDLE BOX®

loabofkd=fkcloj^qflk=J=afjbkpflkp

4" ROUND CEILING FAN AND FIXTURE BOX – SADDLE BOX® FOR NONMETALLIC SHEATHED CABLE OR CONDUIT – 12.5 CUBIC INCHES							
CATALOG NUMBER	DESCRIPTION	CABLE CLAMPS	CU. IN. CAP.	STD. PKG.	UPC BAR CODE	RECOMMENDED MAX. SUPPORT LOADS	
						CEILING FAN (DYNAMIC) LBS.	FIXTURE (STATIC) LBS.
7120VB	Ceiling box	4	12.5	24*	IIIIIIII	70	210
7120	SADDLE BOX®	4	12.5	20*	IIIIIIII	70	210
7120-1	SADDLE BOX®	4	12.5	24	IIIIIIII	70	210

*Packaged in a stackable, individual chipboard box suitable for shelf display

SADDLE BOX®

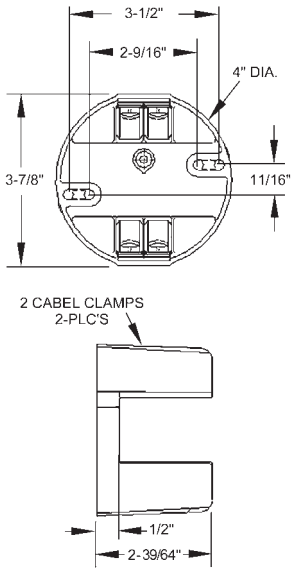

Application

- RACO® Ceiling Support Boxes are specifically designed for ceiling fan and ceiling or wall light fixture support

Product Features

- See page B87 for **THE INSIDER®** (part #4714) nonmetallic sheathed cable connector information
- Mounting hardware and instructions are included

295-1, w/4714 THE INSIDER®

294, 295, 296, 299

294-1

299

296-1

4” ROUND PAN

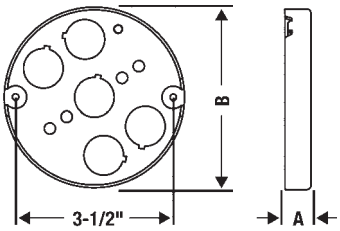

4” OCTAGON BOXES

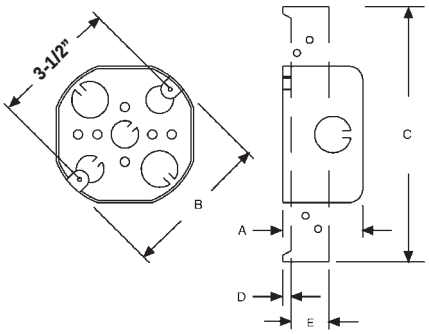

Compliance

- UL – File E195978

loabofkd=fkclo j ^qflk=J=afj bkpflkp

4” ROUND CEILING FAN PAN - 1/2” DEEP – DRAWN WITH CONDUIT KO’S 6.0 CUBIC INCHES

CATALOG NUMBER	DESCRIPTION	KNOCKOUTS		STD. PKG.	UPC BAR CODE	RECOMMENDED MAX. SUPPORT LOADS	
		CABLE	BOTTOM COND.			CEILING FAN (DYNAMIC) LBS.	FIXTURE (STATIC) LBS.
295-1	—	INSIDER	5-1/2”	10	—	70	150
295*	—	INSIDER	5-1/2”	10	|||||||	70	150

4” OCTAGON CEILING FAN BOX – 1-1/2” AND 2-1/8” DEEP – DRAWN WITH INSIDER® CONNECTOR FOR NONMETALLIC SHEATHED CABLE

CATALOG NUMBER	BOX DEPTH	BOX VOL. CU. IN.	KNOCKOUTS			STD. PKG.	UPC BAR CODE	RECOMMENDED MAX. SUPPORT LOADS	
			CABLE	SIDES COND.	BOTTOM COND.			CEILING FAN (DYNAMIC) LBS.	FIXTURE (STATIC) LBS.
296-1	1-1/2”	15.5	INSIDER	4-1/2”	3-1/2”	20	—	70	150
296*	1-1/2”	15.5	INSIDER	4-1/2”	3-1/2”	8	|||||||	70	150
299*	2-1/8”	21.5	INSIDER	4-1/2”	3-1/2”	6	|||||||	70	150

4” OCTAGON CEILING FAN BOX – 2-1/8” DEEP – DRAWN WITH INSIDER® CONNECTOR FOR NONMETALLIC SHEATHED CABLE – 21.5 CUBIC INCHES

CATALOG NUMBER	DESCRIPTION BRACKET & SETBACK	KNOCKOUTS			STD. PKG.	UPC BAR CODE	RECOMMENDED MAX. SUPPORT LOADS	
		CABLE	SIDES COND.	BOTTOM COND.			CEILING FAN (DYNAMIC) LBS.	FIXTURE (STATIC) LBS.
294-1	FA brkt., 1/2”	INSIDER	3-1/2”	3-1/2”	10	—	70	150
294*	FA brkt., 1/2”	INSIDER	3-1/2”	3-1/2”	10	|||||||	70	150

REPLACEMENT HARDWARE – FAN MOUNTING SCREWS

CATALOG NUMBER	DESCRIPTION	SHIP CARTON QTY.	INNER PACK QTY.
8994*	#10-32 x 1-3/8” replacement screws for RACO catalog numbers 295, 295-1	500	50
8995*	#10-32 x 2-3/8” replacement screws for RACO catalog numbers 296, 296-1	300	30
8996*	#10-32 x 3-1/8” replacement screws for RACO catalog numbers 294, 294-1, 299	250	25

DIMENSIONS

CATALOG NUMBER	A (INSIDE)	B	C	D	E
294, 294-1	2-1/8”	4”	5-1/2”	1/2”	2-1/4”
295, 295-1	1/2”	4”	—	—	—
296, 296-1	1-1/2”	4”	—	—	—
299	2-1/8”	4”	—	—	—

* Packaged in a stackable, individual chipboard box suitable for shelf display. Sold in master carton quantities only. Hubbell® RACO® does not break carton quantities on these items

4714, THE INSIDER® will secure nonmetallic sheathed cable in 1/2” KO (See pg. B87)

HUBBELL RACO

Brace Applications

- RACO® RETRO-BRACE® is intended for installations of heavy lighting fixtures or ceiling paddle fans in old work or new work applications
- KWIK-BRACE® is for new work installations where the ceiling drywall has not been installed
- They are ideal for heavy lighting fixtures and ceiling paddle fans

Brace Product Features

- RETRO-BRACE is adjustable for joist spacing from 16" to 24"
- RETRO-BRACE - Simple "tool free" expansion of brace
- RETRO-BRACE has preset support brackets
- Easy-to-follow instructions and mounting hardware included
- KWIK-BRACE slides apart to accommodate joist spacing from 16" to 24"
- Nailing spurs allow for easy brace positioning
- Outlet box can be positioned in any location along its length
- Simple fastener for tightening outlet box and brace
- See page B87 for **THE INSIDER**® (part #4714) nonmetallic sheathed cable connector information

Concrete Ring Application

- Concrete rings are used with poured deck (floor) in high-rise construction

GORILLA RING® Product Features

- GORILLA RING features mounting screws that allow for safe and secure mounting of any chandeliers, or lighting fixtures 70 lbs. or less
- Double row of KO's allow greater installation flexibility with a minimum of bends or offsets for working around reinforcing rods

Compliance

- UL – File E195978

923, 924
KWIK-BRACE®
w/4714 THE INSIDER®

936, 937
RETRO-BRACE®
w/4714 THE INSIDER®

926 - 926-1
KWIK-BRACE®

927, 928 KWIK-BRACE®
w/4714 THE INSIDER®

284
GORILLA-RING®

loabofkd=fkclo j ^qflk=J=afj bkpflkp

REMODELING BRACES FOR LIGHTING FIXTURES OR CEILING FANS – RETRO-BRACE WITH BOX

CATALOG NUMBER	DESCRIPTION	CU. IN. CAP.	STD. PKG.	UPC BAR CODE	RECOMMENDED MAX. SUPPORT LOADS①	
					CEILING FAN (DYNAMIC) LBS.	FIXTURE (STATIC) LBS.
936*	1-1/2" Deep Box Remodeling Kit	15.5	6	|||||||	70/35	110/50
937*	2-1/8" Deep Box Remodeling Kit	21.5	4	|||||||	70/35	110/50

①70/110 ratings @ 16" span; 35/50 ratings @ 24" spans

NEW CONSTRUCTION BRACES FOR LIGHTING FIXTURES OR CEILING FANS KWIK-BRACE WITH BOX

CATALOG NUMBER	DESCRIPTION	CU. IN. CAP.	STD. PKG.	UPC BAR CODE	RECOMMENDED MAX. SUPPORT LOADS②	
					CEILING FAN (DYNAMIC) LBS.	FIXTURE (STATIC) LBS.
923	1/2" Deep box	6.0	18	|||||||	70	210/90
924*	1/2" Deep box	6.0	6	|||||||	70	210/90
926-1	1-1/2" Deep box	15.5	12	|||||||	70	210/90
926*	1-1/2" Deep box	15.5	6	|||||||	70	210/90
927	2-1/8" Deep box	21.5	12	|||||||	70	210/90
928*	2-1/8" Deep box	21.5	6	|||||||	70	210/90

②70/210 ratings @ 16" span; 70/90 ratings @ 24" spans

REPLACEMENT HARDWARE – FAN MOUNTING SCREWS

CATALOG NUMBER	DESCRIPTION	SHIP CARTON QTY.	INNER PACK QTY.
8994*	#10-32 x 1-3/8" replacement screws for RACO catalog numbers 295, 295-1, 923, 924	500	50
8995*	#10-32 x 2-3/8" replacement screws for RACO catalog numbers 296, 926, 936	300	30
8996*	#10-32 x 3-1/8" replacement screws for RACO catalog numbers 294, 299, 928, 937	250	25

CONCRETE RING - 4" DEEP – FOR CEILING FAN SUPPORT – GORILLA RING

CATALOG NUMBER	DESCRIPTION	KNOCKOUTS			CU. IN. CAP.	STD. PKG.	UPC BAR CODE	RECOMMENDED MAX. SUPPORT LOADS	
		SIDES		BOTTOM					
		CABLE	COND.	COND.				CEILING FAN (DYNAMIC) LBS.	FIXTURE (STATIC) LBS.
284	RACO 890 or 892 cover must be ordered separately	—	Double row 1/2" & 3/4"	—	49.3	6	—	35	70

* Packaged in a stackable, individual chipboard box suitable for shelf display. *Sold in master carton quantities only. Hubbell® RACO® does not break carton quantities on these items

4714, THE INSIDER® will secure nonmetallic sheathed cable in 1/2" KO (See pg. B87)

HUBBELL RACO

Application

- Ceiling pans are used in the installation of ceiling or wall lighting fixtures

Product Features

- Combination screw heads provide for faster installation
- See page B87 for **THE INSIDER®** (part #4714) nonmetallic sheathed cable connector information

3-1/2" ROUND PAN

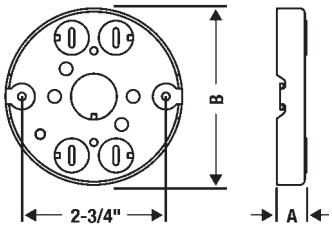

4" ROUND PAN

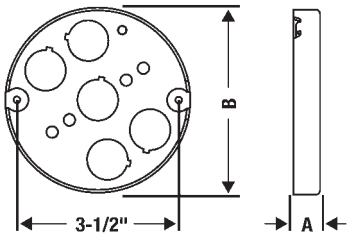

Compliance

- UL – File E195978

292, 8292

287

293, 8293

295, 295-1, w/4714 THE INSIDER®

703, 8703-5

loabofkd=fkclojqflk=J=afjbkpflkp

3-1/2” ROUND PAN – 1/2” DEEP – DRAWN WITH NONMETALLIC SHEATHED CABLE CLAMPS – 4.0 CUBIC INCHES

CATALOG NUMBER	DESCRIPTION	KNOCKOUTS BOTTOM CABLE	KNOCKOUTS BOTTOM COND.	STD. PKG.	UPC BAR CODE	RECOMMENDED MAX. SUPPORT LOADS CEILING FAN (DYNAMIC) LBS.	RECOMMENDED MAX. SUPPORT LOADS FIXTURE (STATIC) LBS.
292	Round ceiling pan	4 prioutsl	1-1/2”	50	—	No	50
8292	Round ceiling pan	4 prioutsl	1-1/2”	50	IIIIIIII	No	50

3-1/2” ROUND PAN – 11/16” DEEP – DRAWN WITH NONMETALLIC SHEATHED CABLE CLAMPS – 5.0 CUBIC INCHES

CATALOG NUMBER	DESCRIPTION	KNOCKOUTS BOTTOM CABLE	KNOCKOUTS BOTTOM COND.	STD. PKG.	UPC BAR CODE	RECOMMENDED MAX. SUPPORT LOADS CEILING FAN (DYNAMIC) LBS.	RECOMMENDED MAX. SUPPORT LOADS FIXTURE (STATIC) LBS.
287	Round ceiling pan	4 prioutsl	1-1/2”	50	—	No	50

4” ROUND CEILING FAN AND FIXTURE PAN – 1/2” DEEP – DRAWN WITH CONDUIT KO’S 6.0 CUBIC INCHES

CATALOG NUMBER	DESCRIPTION	KNOCKOUTS BOTTOM CABLE	KNOCKOUTS BOTTOM COND.	STD. PKG.	UPC BAR CODE	RECOMMENDED MAX. SUPPORT LOADS CEILING FAN (DYNAMIC) LBS.	RECOMMENDED MAX. SUPPORT LOADS FIXTURE (STATIC) LBS.
293	Round ceiling pan	—	5-1/2”	50	—	No	50
8293	Round ceiling pan	—	5-1/2”	50	IIIIIIII	No	50
295-1*	Round ceiling pan	INSIDER	5-1/2”	10	—	70	150
295*	Round ceiling pan	INSIDER	5-1/2”	10	IIIIIIII	70	150

3-1/2” ROUND COVER

CATALOG NUMBER	DESCRIPTION	STD. PKG.	UPC BAR CODE
703	Flat, 1/2" KO in center	25	IIIIIIII
8703-5	Flat, 1/2" KO in center	50*	IIIIIIII

*5 Bundles of 10

DIMENSIONS

CATALOG NUMBER	A (INSIDE)	B
292, 8292	1/2”	3-3/8”
287	11/16”	3-3/8”
293, 8293	1/2”	4”
295, 295-1	1/2”	4”

* Packaged in a stackable, individual chipboard box suitable for shelf display. Sold in master carton quantities only. Hubbell® RACO® does not break carton quantities on these items

4714, THE INSIDER® will secure nonmetallic sheathed cable in 1/2” KO (See pg. B87)

Applications

- Octagon boxes are used in the installation of ceiling or wall lighting fixtures
- Extension rings provide a means for adding additional cubic capacity or as an outlet box for surface conduit

Product Features

- Combination screw heads provide for faster installation
- Reference the Box Selection section in the front of this catalog for complete description of bracket types and features

3-1/2” OCTAGON BOXES

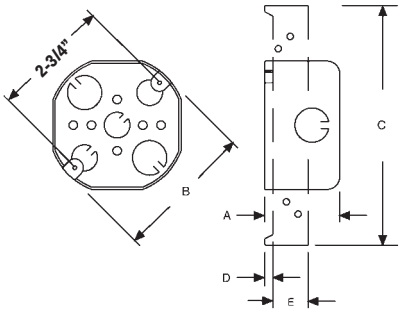

Compliance

- UL – File E195978

110

112

119

111

l o a b o f k d=f k c l o j ^q f l k=J=a f j b k p f l k p

3-1/2” OCTAGON BOX – 1-1/2” DEEP – DRAWN WITH CONDUIT KO’S – 11.8 CUBIC INCHES

CATALOG NUMBER	DESCRIPTION BRACKET & SETBACK	KNOCKOUTS		STD. PKG.	UPC BAR CODE	RECOMMENDED MAX. SUPPORT LOADS	
		SIDES	BOTTOM				
		COND.	COND.			CEILING FAN (DYNAMIC) LBS.	FIXTURE (STATIC) LBS.
110	—	4-1/2”	1-1/2”	25	IIIIIIII	No	50

3-1/2” OCTAGON BOX – 1-1/2” DEEP – DRAWN WITH NONMETALLIC SHEATHED CABLE CLAMPS – 11.8 CUBIC INCHES

CATALOG NUMBER	DESCRIPTION BRACKET & SETBACK	KNOCKOUTS			STD. PKG.	UPC BAR CODE	RECOMMENDED MAX. SUPPORT LOADS	
		SIDES		BOTTOM				
		CABLE	COND.	COND.			CEILING FAN (DYNAMIC) LBS.	FIXTURE (STATIC) LBS.
112	—	4	2-1/2”	1-1/2”	25	IIIIIIII	No	50
119	TS brkt., 1/2”	4	1-1/2”	1-1/2”	25	IIIIIIII	No	50

3-1/2” OCTAGON EXTENSION RING – 1-1/2” DEEP – DRAWN WITH CONDUIT KO’S – 11.8 CUBIC INCHES

CATALOG NUMBER	DESCRIPTION BRACKET & SETBACK	KNOCKOUTS		STD. PKG.	UPC BAR CODE
		SIDES COND.	BOTTOM COND.		
111	Extension ring	4-1/2”	—	25	IIIIIIII

DIMENSIONS

CATALOG NUMBER	A (INSIDE)	B	C	D	E
110	1-1/2”	3-1/2”	—	—	—
112	1-1/2”	3-1/2”	—	—	—
119	1-1/2”	3-1/2”	7”	1/2”	1-1/16”
111	1-1/2”	3-1/2”	—	—	—

4714, THE INSIDER® will secure nonmetallic sheathed cable in 1/2” KO (See pg. B87)

Application

- Octagon boxes are used in the installation of ceiling or wall lighting fixtures

Product Features

- Combination screw heads provide for faster installation
- Reference the Box Selection section in the front of this catalog for complete description of bracket types and features
- Fixture bar hanger allows box to be located anywhere along length of bar
- RACO® 324 includes 3/8”-18 NPS trade sized stud to accommodate fixture stem. Locknut is not required for mounting box

125, 8125

126

127

158

161

324

l oabofkd=fkc l o j ^qf l k=J=af j bkpf l kp

4” OCTAGON BOX – 1-1/2” DEEP – DRAWN WITH CONDUIT KO’S – 15.5 CUBIC INCHES

CATALOG NUMBER	DESCRIPTION BRACKET & SETBACK	KNOCKOUTS		STD. PKG.	UPC BAR CODE	RAISED GROUND PROVISION	RECOMMENDED MAX. SUPPORT LOADS	
		SIDES	BOTTOM					
		COND.	COND.				CEILING FAN (DYNAMIC) LBS.	FIXTURE (STATIC) LBS.
125	—	4-1/2”	5-1/2”	50	—	—	No	50
8125	—	4-1/2”	4-1/2”	50	IIIIIIII	Yes	No	50
126	—	4-3/4”	2-1/2” 2-3/4”	50	—	Yes	No	50
127	—	2-1/2” 2-3/4”	2-1/2” 2-3/4”	50	IIIIIIII	Yes	No	50
158	J brkt., 3/8” or 1/2”	4 –1/2”	5-1/2”	50	IIIIIIII	—	No	50
161	TS brkt., 1/2”	3-1/2”	5-1/2”	50	IIIIIIII	—	No	50

4” OCTAGON BOXES

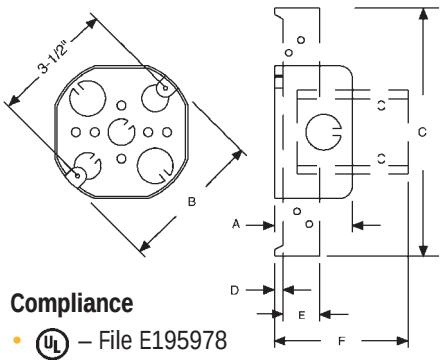

DIMENSIONS

CATALOG NUMBER	A (INSIDE)	B	C	D	E	F
125, 8125	1-1/2”	4”	—	—	—	—
126	1-1/2”	4”	—	—	—	—
127	1-1/2”	4”	—	—	—	—
158	1-1/2”	4”	2-3/8”	—	—	3-1/8”
161	1-1/2”	4”	7”	1/2”	1-1/16”	—

Compliance

- UL – File E195978

4” OCTAGON BOX WITH BAR HANGER – 1-1/2” DEEP (INSIDE) – DRAWN WITH CONDUIT KO’S – 15.5 CUBIC INCHES

CATALOG NUMBER	DESCRIPTION BRACKET & SETBACK	KNOCKOUTS		STD. PKG.	UPC BAR CODE	RECOMMENDED MAX. SUPPORT LOADS	
		SIDES	BOTTOM				
		COND.	COND.			CEILING FAN (DYNAMIC) LBS.	FIXTURE (STATIC) LBS.
324*	3/8” Stud, adj. 14-1/4” to 22-1/2”	4-1/2”	4-1/2”	25	IIIIIIII	No	50

*UL Rated at 16” on center joist

Application

- Octagon boxes are used in the installation of ceiling or wall lighting fixtures

Product Features

- RACO® offers a variety of labor saving mounting brackets that allow for easy positioning of box along studs or joists
- Reference the Box Selection section in the front of this catalog for complete description of bracket and clamp types and features
- Fixture bar hanger allows box to be located anywhere along length of bar
- RACO® 326, 8326 includes 3/8”-18 NPS trade sized stud to accommodate fixture stem. Locknut not required to mount box
- Combination screw heads provide for faster installation

4” OCTAGON BOXES

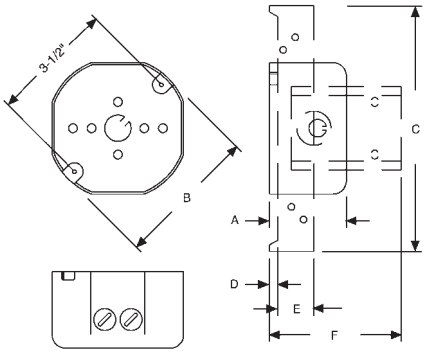

Compliance

- UL – File E195978

146, 8146

145

150

160

164

326, 8326

l oabofkd=fkc l o j ^qf l k=J=af j bkpf l kp

4” OCTAGON BOX – 1-1/2” DEEP – DRAWN WITH NONMETALLIC SHEATHED CABLE CLAMPS – 15.5 CUBIC INCHES

CATALOG NUMBER	DESCRIPTION	KNOCKOUTS			STD. PKG.	UPC BAR CODE	RECOMMENDED MAX. SUPPORT LOADS	
		SIDES		BOTTOM				
		CABLE	COND.	COND.			CEILING FAN (DYNAMIC) LBS.	FIXTURE (STATIC) LBS.
146	—	4	2-1/2”	1-1/2”	50	—	No	50
8146	—	4	2-1/2”	1-1/2”	50		No	50
145	Side holes, 1/8” & 1/4”	4	2-1/2”	1-1/2”	50	—	No	50
150	Ears	4	2-1/2”	1-1/2”	50		No	50
160	J brkt., 3/8” or 1/2”	4	2-1/2"	1-1/2”	50		No	50
164	TS brkt., 1/2”	4	1-1/2”	1-1/2”	50		No	50

4” OCTAGON WITH BAR HANGER – 1-1/2” DEEP – DRAWN WITH NONMETALLIC SHEATHED CABLE CLAMPS – 15.5 CUBIC INCHES

CATALOG NUMBER	DESCRIPTION BRACKET & SETBACK	KNOCKOUTS			STD. PKG.	UPC BAR CODE	RECOMMENDED MAX. SUPPORT LOADS	
		SIDES		BOTTOM				
		CABLE	COND.	COND.			CEILING FAN (DYNAMIC) LBS.	FIXTURE (STATIC) LBS.
326*	3/8” Stud, adj. 14-1/4” to 22-1/2”	4	2-1/2”	—	25	—	No	50
8326*	3/8” Stud, adj. 14-1/4” to 22-1/2”	4	2-1/2”	—	25		No	50

*UL Rated at 16” on center joist

DIMENSIONS

CATALOG NUMBER	A (INSIDE)	B	C	D	E	F
146, 8146	1-1/2”	4”	—	—	—	—
145	1-1/2”	4”	—	—	—	—
150	1-1/2”	4”	—	—	—	—
160	1-1/2”	4”	2-3/8”	—	—	3-1/8”
164	1-1/2”	4”	7”	1/2”	1-1/16”	—

Applications

- Octagon boxes are used in the installation of ceiling or wall lighting fixtures

Product Features

- RACO® offers a variety of labor saving mounting brackets that allow for easy positioning of box along studs or joists
- Reference the Box Selection section in the front of this catalog for complete description of bracket and clamp types and features
- Fixture bar hanger allows box to be located anywhere along length of bar
- RACO® 325, 8325 includes 3/8”-18 NPS trade sized stud to accommodate fixture stem. Locknut not required to mount box

4” OCTAGON BOXES

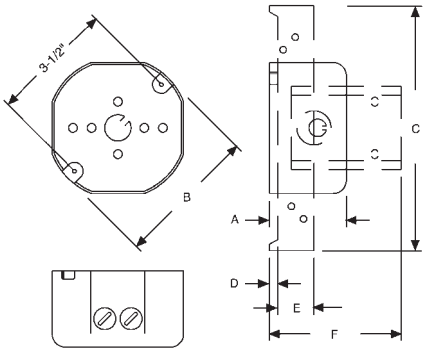

Compliance

- UL – File E195978

325, 8325

153

155

157

l oabofkd=fkc l o j ^qf l k=J=af j bkpf l kp

4” OCTAGON BOX WITH BAR HANGER – 1-1/2” DEEP – DRAWN WITH ARMORED CABLE/ METAL CLAD/FLEX CLAMPS – 15.5 CUBIC INCHES

CATALOG NUMBER	DESCRIPTION BRACKET & SETBACK	KNOCKOUTS			STD. PKG.	UPC BAR CODE	RECOMMENDED MAX. SUPPORT LOADS	
		SIDES		BOTTOM				
		CABLE	COND.	COND.			CEILING FAN (DYNAMIC) LBS.	FIXTURE (STATIC) LBS.
325*	3/8” Stud, adj. 14-1/4” – 22-1/2”	4	2-1/2”	—	25	—	No	50
8325*	3/8” Stud, adj. 14-1/4” – 22-1/2”	4	2-1/2”	—	25	IIIIIIII	No	50

*UL Rated at 16” on center joist

4” OCTAGON BOX – 1-1/2” DEEP – DRAWN WITH ARMORED CABLE/METAL CLAD/ FLEX CLAMPS – 15.5 CUBIC INCHES

CATALOG NUMBER	DESCRIPTION BRACKET & SETBACK	KNOCKOUTS			STD. PKG.	UPC BAR CODE	RECOMMENDED MAX. SUPPORT LOADS	
		SIDES		BOTTOM				
		CABLE	COND.	COND.			CEILING FAN (DYNAMIC) LBS.	FIXTURE (STATIC) LBS.
153	—	4	2-1/2”	1-1/2”	25	IIIIIIII	No	50
155	TS brkt., 1/2”	4	1-1/2”	1-1/2”	50	IIIIIIII	No	50
157	J brkt., 3/8” or 1/2”	4	2-1/2”	1-1/2”	50	IIIIIIII	No	50

DIMENSIONS

CATALOG NUMBER	A (INSIDE)	B	C	D	E	F
153	1-1/2”	4”	—	—	—	—
155	1-1/2”	4”	7”	1/2”	1-1/16”	—
157	1-1/2”	4”	2-3/8”	1/2”	—	3-1/8”

Application

- Octagon boxes are used in the installation of ceiling or wall lighting fixtures

166

167

165

l o a b o f k d=f k c l o j ^q f l k=J=a f j b k p f l k p

4” OCTAGON BOXES

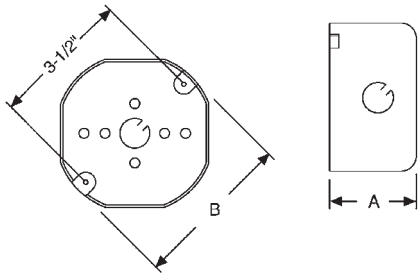

4” OCTAGON BOX – 2-1/8” DEEP (INSIDE) – DRAWN WITH CONDUIT KNOCKOUTS – 21.5 CUBIC INCHES							
CATALOG NUMBER	DESCRIPTION BRACKET & SETBACK	KNOCKOUTS		STD. PKG.	UPC BAR CODE	RECOMMENDED MAX. SUPPORT LOADS	
		SIDES	BOTTOM				
		COND.	COND.			CEILING FAN (DYNAMIC) LBS.	FIXTURE (STATIC) LBS.
165	—	4-1/2”	5-1/2”	50	—	No	50
166	—	4-3/4”	3-1/2” 2-3/4”	50	—	No	50
167	—	2-1/2” 2-3/4”	2-3/4” 3-1/2”	50	IIIIIIII	No	50

DIMENSIONS		
CATALOG NUMBER	A (INSIDE)	B
165	2-1/8”	4”
166	2-1/8”	4”
167	2-1/8”	4”

Compliance

- UL – File E195978

4714, THE INSIDER® will secure nonmetallic sheathed cable in 1/2” KO (See pg. B87)

Q” l `q^d l k=_ l ubp

OJNLU” abbm= t fqe=k l k j bq^ i if `=` ^_ i b=` i ^ j mp

Application

- Octagon boxes are used in the installation of ceiling or wall lighting fixtures
- Extension rings provide a means for adding additional cubic capacity or as an outlet box for surface conduit

Product Features

- Reference Box Selection section in the front of this catalog for complete description of bracket and clamp types and features
- Combination screw heads provide for faster installation

175

176

177

128

130

131RAC

4” OCTAGON BOXES

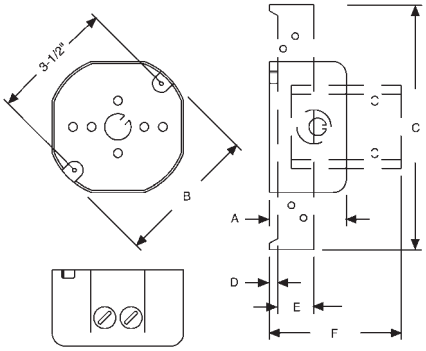

Compliance

- UL – File E195978
- CSA – File LR-1082 (128, 130, 131RAC)

l oabofkd=fkc l o j ^qf l k=J=af j bkpf l kp

4” OCTAGON BOX – 2-1/8” DEEP – DRAWN WITH NONMETALLIC SHEATHED CABLE CLAMPS – 21.5 CUBIC INCHES

CATALOG NUMBER	DESCRIPTION BRACKET & SETBACK	KNOCKOUTS			STD. PKG.	UPC BAR CODE	RECOMMENDED MAX. SUPPORT LOADS	
		SIDES		BOTTOM				
		CABLE	COND.	COND.			CEILING FAN (DYNAMIC) LBS.	FIXTURE (STATIC) LBS.
175	—	4	2-1/2”	1-1/2”	50		No	50
176	J brkt., 5/8”	4	2-1/2”	1-1/2”	25		No	50
177	TS brkt., 1/2”	4	1-1/2”	1-1/2”	25	—	No	50

4” OCTAGON EXTENSION RINGS – 1-1/2” DEEP – DRAWN WITH CONDUIT KO’S – 15.5 CU. IN.

CATALOG NUMBER	DESCRIPTION BRACKET & SETBACK	KNOCKOUTS SIDES COND.	STD. PKG.	UPC BAR CODE	RECOMMENDED MAX. SUPPORT LOADS	
					CEILING FAN (DYNAMIC) LBS.	FIXTURE (STATIC) LBS.
128	Extension ring	4-1/2”	25		NO	50
130	Extension ring	2-1/2”, 2-3/4”	50		NO	50
131RAC	Extension ring	4-3/4”	25		NO	50

DIMENSIONS

CATALOG NUMBER	A (INSIDE)	B	C	D	E	F
128	1-1/2”	4”	—	—	—	—
130	1-1/2”	4”	—	—	—	—
131RAC	1-1/2”	4”	—	—	—	—
175	2-1/8”	4”	—	—	—	—
176	2-1/8”	4”	2-3/8”	5/8”	—	3-1/8”
177	2-1/8”	4”	7”	1/2”	1-1/16”	—

Applications

- Covers are used to close an outlet box
- Switches or receptacles may be installed into octagon boxes by using covers 729 or 731
- Raised covers are used for mounting lighting fixtures
- 5” Round closure plates are designed for use in dry locations for closure at unused ceiling outlets

Product Features

- 5” Round covers feature state-of-the-art powder coat paint finish which provides a light texture finish and scratch resistance
- Swivel cover restricted to 20º swing from vertical
- KWIK-HANG® allows easy installation of high bay lighting fixtures. Fixture nests in cover while wiring is completed

ROUND CLOSURE PLATES

CAT. NO. 5652-1

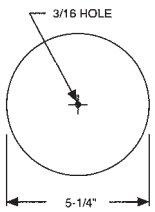

CAT. NO. 5653-1

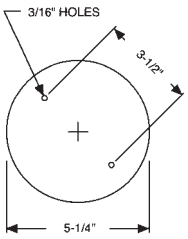

CAT. NO. 5654-1

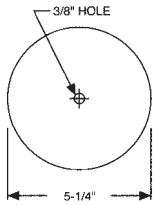

Compliance

- UL – File E195978
- CSA – File LR-1082 (722, 729, 731)

894

895

722, 8722-5

724, 8724-5

729

731, 8731-5

727, 732, 737

5652-1

5653-1

5654-1

loabofkd=fkclo j ^qflk=J=afj bkpflkp

4” OCTAGON AND ROUND COVERS

CATALOG NUMBER	DESCRIPTION	CU. IN.	STD. PKG.	UPC BAR CODE	RECOMMENDED MAX. SUPPORT LOADS	
					CEILING FAN (DYNAMIC) LBS.	FIXTURE (STATIC) LBS.
722	Flat, blank	—	50	—	No	No
8722-5	Flat, blank	—	50*	|||||||	No	No
724	Flat, 1/2” KO	—	50	|||||||	No	No
8724-5	Flat, 1/2” KO	—	50*	|||||||	No	No
729	Flat, toggle switch	—	50	|||||||	No	No
731	Flat, duplex receptacle	—	25	|||||||	No	No
8731-5	Flat, duplex receptacle	—	50*	|||||||	No	No
737	Raised 1/2”, open, ears 2-3/4” O.C.	3.3	25	|||||||	No	50
727	Raised 5/8”, open, ears 2-3/4” O.C.	3.8	25	|||||||	No	50
732	Raised 1”, open, ears 2-3/4” O.C.	6.5	25	—	No	50

*5 Bundles of 10

SWIVEL FIXTURE, SUPPORT COVERS

CATALOG NUMBER	DESCRIPTION	STD. PKG.	UPC BAR CODE	RECOMMENDED MAX. SUPPORT LOADS	
				CEILING FAN (DYNAMIC) LBS.	FIXTURE (STATIC) LBS.
894	KWIK-HANG®, For 3-1/2” or 4” octagon boxes, 1/2” or 3/4” conduit	25	|||||||	No	50
895	For 3-1/2” or4” octagon boxes, 1/2” or 3/4” conduit	25	|||||||	No	50

5” ROUND STEEL CLOSURE PLATES

CATALOG NUMBER	COLOR	DESCRIPTION TYPE	PKG. PKG.	STD. BAR CODE	UPC
5652-1	Off-white	Screw & universal mount strap	Shrink	10	—
5653-1	Off-white	(2) 8-3 2 screws, direct mount to fixture outlet box	Shrink	10	—
5654-1	Off-white	Fixture stud & universal mount strap	Shrink	10	—

HUBBELL RACO

Applications

- Boxes are installed in walls or ceilings for lighting fixtures, switches or receptacles
- Square boxes are used where multiple conductor runs are split into two or more directions to bring power to a number of electrical devices
- Drawn boxes are ideal for exposed work applications

Product Features

- Combination screw heads provide for faster installation
- Thru-the-wall box is designed for shallow wall applications and allows for attachment of wall plate to both faces of box
- TKO® knockouts offer greater flexibility with RACO® patented combination 1/2” and 3/4” knockout
- TKO® knockouts allow for design and installation flexibility
- UBS Support - Welded to box, preset bend points to work with wall thickness 2-1/2” to 6”
- Red boxes, covers and extensions for dedicated life safety alarm circuits

Compliances

- UL – File E195978

All RACO® single gang, two gang, 4” square, and single gang gangable U.L. listed steel boxes are acceptable for use in 2-hour fire rated walls. For additional information, consult U.L. “Fire Resistance Directory” or the U.L. website at www.ul.com

600V Per U.L. 514-A, suitable for use without a bonding jumper in circuits up to 600 volts

189SM | 189F | 189, 8189 | 911-9 | 190, 8190 | 191, 8191

192, 8192 | 192SM | 181 | 185 | 204

l oabofkd=fkc l o j ^qf l k=J=af j bkpf l kp

4” SQUARE – 1-1/4” DEEP (INSIDE) – DRAWN WITH CONDUIT KO’S – 18.0 CUBIC INCHES

CATALOG NUMBER	UBS FARSIDE SUPPORT	KNOCKOUTS		STD. PKG.	RAISED GROUND PROVISION	PIG-TAIL	UPC BAR CODE
		SIDES COND.	BOTTOM COND.				
185	—	10-1/2”	5-1/2”	50	No	No	

4” SQUARE – 1-1/2” DEEP (INSIDE) – DRAWN WITH CONDUIT KO’S – 21.0 CUBIC INCHES

CATALOG NUMBER	UBS FARSIDE SUPPORT	KNOCKOUTS		STD. PKG.	RAISED GROUND PROVISION	PIG-TAIL	UPC BAR CODE
		SIDES COND.	BOTTOM COND.				
190	—	12-1/2”	4-1/2”	50	Yes	No	
8190	—	12-1/2”	4-1/2”	50	Yes	No	
191	—	8-3/4”	1-1/2”, 3-3/4”	50	Yes	No	
8191	—	8-3/4”	1-1/2”, 3-3/4”	25	Yes	No	
192	—	8-1/2”, 4-3/4”	2-1/2”, 2-3/4”	50	Yes	No	
8192	—	8-1/2”, 4-3/4”	2-1/2”, 2-3/4”	50	Yes	No	
192SM	—	8-1/2”, 4-3/4”	2-1/2”, 2-3/4”	50	Yes	Yes	

4” SQUARE – 1-1/2” DEEP (INSIDE) – WELDED WITH CONDUIT KO’S – 21.0 CUBIC INCHES

	CATALOG NUMBER	UBS FARSIDE SUPPORT	KNOCKOUTS		STD. PKG.	RAISED GROUND PROVISION	PIG-TAIL	UPC BAR CODE
			SIDES COND.	BOTTOM COND.				
	181	—	8-3/4”	1-1/2”, 4-3/4”	50	No	No	—
600V	189	—	8-1/2”, 4-TKO®	2-1/2”, 2-TKO®	50	Yes	No	—
600V	8189	—	8-1/2”, 4-TKO®	3-1/2”, 2-TKO®	50	No	No	
600V	189SM	—	8-1/2”, 4-TKO®	2-1/2”, 2-TKO®	50	Yes	Yes	—
600V	189F	Yes	8-1/2”, 4-TKO®	2-1/2”, 2-TKO®	50	Yes	Yes	—
600V	911-9	—	8-1/2”, 4-TKO®	3-1/2”, 2-TKO®	50	No	No	—

4” SQ. – THRU-THE-WALL BOX – 1-1/2” DEEP (INSIDE) – DRAWN WITH CONDUIT KO’S – 22.5 CU. IN.

CATALOG NUMBER	UBS FARSIDE SUPPORT	KNOCKOUTS		CU. IN.	STD. PKG.	PIG-TAIL	UPC BAR CODE
		SIDES COND.	BOTTOM COND.				
204	—	8-1/2”, 4-3/4”	—	22.5	50	No	—

4714, THE INSIDER® will secure nonmetallic sheathed cable in 1/2” KO (See pg. B87)

NJNLO” abbmL`lkarfq

Applications

- Boxes are installed in walls or ceilings for lighting fixtures, switches or receptacles
- Square boxes are used where multiple conductor runs are split into two or more directions to bring power to a number of electrical devices

Product Features

- Reference Box Selection section in the front of this catalog for complete description of bracket types and features
- BOX-LOC® (MS) Bracket Box is a snap to install. Place the bracket on the open side of the stud first. Slots in the bracket engage the lip of the stud and actually crimp it as you press the bracket on the stud. Barbed hooks dig into the flat side of the stud, quickly locking it in place
- TKO® knockouts offer greater flexibility with RACO® patented combination 1/2” and 3/4” knockout
- UBS Support - Welded to box, preset bend points to work with wall thickness 2-1/2” to 6”

4” SQUARE BOXES

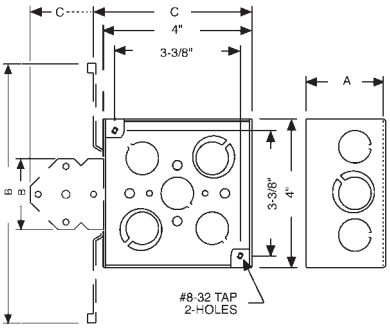

Compliances

- UL – File E195978

All RACO® single gang, two gang, 4” square, and single gang gangable U.L. listed steel boxes are acceptable for use in 2-hour fire rated walls. For additional information, consult U.L. “Fire Resistance Directory” or the U.L. website at www.ul.com

600V Per U.L. 514-A, suitable for use without a bonding jumper in circuits up to 600 volts

loabofkd=fkclo j^qflk=J=afj bkpflkp

4” SQUARE BRACKETED BOXES – 1-1/2” DEEP – WELDED WITH CONDUIT KO’S – 21.0 CUBIC INCHES

	CATALOG NUMBER	DESCRIPTION BRACKET & SETBACK	KNOCKOUTS SIDES COND.	KNOCKOUTS BOTTOM COND.	STD. PKG.	UBS SUP-PORT	PIG-TAIL	RSD. GRND. PRVSN.	UPC BAR CODE
600V	189H	HM	6-1/2”, 3 – TKO®	2-1/2”, 2 – TKO®	20	Yes	Yes	Yes	—
	189HS*	HM	6-1/2”, 3 – TKO®	2-1/2”, 2 – TKO®	20	Yes	Yes	Yes	—
600V	189M	HM	4-1/2”, 2 – TKO®	2-1/2”, 2 – TKO®	20	Yes	Yes	Yes	—
600V	189HWP	HM	6-1/2”, 3 – TKO®	2-1/2”, 2 – TKO®	20	Yes	No	Yes	—
600V	193	B, flush	6-1/2”, 3 – TKO®	3-1/2”, 2 – TKO®	25	—	No	—	—
600V	8193	B, flush	6-1/2”, 3 – TKO®	3-1/2”, 2 – TKO®	10	—	No	—	||||||||
600V	196	FM, flush	6-1/2”, 3 – TKO®	3-1/2”, 2 – TKO®	25	—	No	—	—
600V	8196	FM, flush	6-1/2”, 3 – TKO®	3-1/2”, 2 – TKO®	25	—	No	—	||||||||
600V	197	FH, flush	6-1/2”, 3 – TKO®	3-1/2”, 2 – TKO®	25	—	No	—	—
600V	8197	FH, flush	6-1/2”, 3 – TKO®	3-1/2”, 2 – TKO®	25	—	No	—	||||||||
600V	199	FM, flush	6-3/4”	1-1/2”, 4-3/4"	25	—	No	—	—
600V	208	W, flush	6-1/2”, 3 – TKO®	3-1/2”, 2 – TKO®	25	—	No	—	—
	8208	W, flush	6-1/2”, 3 – TKO®	3-1/2”, 2 – TKO®	25	—	No	—	||||||||
600V	227	BOX-LOC® (MS) flush	6-1/2”, 3 – TKO®	3-1/2”, 2 – TKO®	25	Plastic	No	—	||||||||

*Box has stranded pigtail assembled

DIMENSIONS

CATALOG NUMBER	A (INSIDE)	B	C
189H	1-1/2”	3-1/8”	4-5/16”
189HS	1-1/2”	3-1/8”	4-5/16”
189M	1-1/2”	3-1/8”	4-5/16”
189HWP	1-1/2”	3-1/8”	4-5/16”
193, 8193	1-1/2”	1-31/32”	6”
196, 8196	1-1/2”	6-7/8”	4-3/8”
197, 8197	1-1/2”	7-3/8”	4-3/8”
199	1-1/2”	6-7/8”	4-3/8”
208, 8208	1-1/2”	6-13/16”	5-15/16”
227	1-1/2”	4-5/8”	5-1/2”

4714, THE INSIDER® will secure nonmetallic sheathed cable in 1/2” KO (See pg. B87)

Applications

- Boxes are installed in walls or ceilings for lighting fixtures, switches or receptacles
- Square boxes are used where multiple conductor runs are split into two or more directions to bring power to a number of electrical devices

Product Features

- Reference Box Selection section in the front of this catalog for complete description of bracket and clamp types and features
- BOX-LOC® (MS) Bracket Box is a snap to install. Place the bracket on the open side of the stud first. Slots in the bracket engage the lip of the stud and actually crimp it as you press the bracket on the stud. Barbed hooks dig into the flat side of the stud, quickly locking it in place
- Combination screw heads provide for faster installation
- TKO® knockouts offer greater flexibility with RACO® patented combination 1/2” and 3/4” knockout

4” SQUARE BOXES

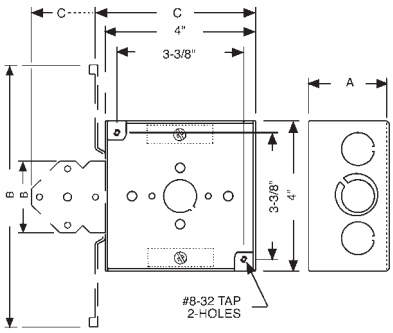

Compliances

- UL – File E195978

All RACO® single gang, two gang, 4” square, and single gang gangable U.L. listed steel boxes are acceptable for use in 2-hour fire rated walls. For additional information, consult U.L. “Fire Resistance Directory” or the U.L. website at www.ul.com

600V Per U.L. 514-A, suitable for use without a bonding jumper in circuits up to 600 volts

213, 8213

218, 8218

219

229 BOX-LOC®

224

213HWP

loabofkd=fkcloj^qflk=J=afjbkpflkp

4” SQUARE – 1-1/2” DEEP – WELDED WITH ARMORED CABLE/METAL CLAD/FLEX CLAMPS – 21.0 CUBIC INCHES

	CATALOG NUMBER	DESCRIPTION BRACKET & SETBACK	KNOCKOUTS			UBS SUP-PORT	STD. PKG.	UPC BAR CODE
			SIDES		BOTTOM			
			CABLE	COND.	COND.			
600V	213	—	4	4-1/2”, 2 – TKO®	1-1/2”	—	50	—
600V	8213	—	4	4-1/2”, 2 – TKO®	1-1/2”	—	50	|||||||
600V	219	FH, flush	4	2-1/2”, 1 – TKO®	1-1/2”	—	25	—
600V	224	B, flush	4	2-1/2”, 1 – TKO®	1-1/2”	—	25	—
600V	218	FM, flush	4	2-1/2”, 1 – TKO®	1-1/2”	—	25	—
600V	8218	FM, flush	4	2-1/2”, 1 – TKO®	1-1/2”	—	25	|||||||
600V	229*	BOX-LOC® (MS) flush	4	2-1/2”, 1 – TKO®	1-1/2”	Plastic	25	|||||||
600V	213HWP	HM Bracket	4	2-1/2” , 1 - TKO®	1-1/2”	Yes	20	—

*Provided w/far-side support (part #978)

DIMENSIONS

CATALOG NUMBER	A (INSIDE)	B	C
213, 8213	1-1/2”	—	—
218, 8218	1-1/2”	6-7/8”	4-3/8”
219	1-1/2”	7-3/8”	4-3/8”
224	1-1/2”	1-31/32”	6”
229	1-1/2”	4-5/8”	5-1/2”

Applications

- Boxes are installed in walls or ceilings for lighting fixtures, switches or receptacles
- Square boxes are used where multiple conductor runs are split into two or more directions to bring power to a number of electrical devices

Product Features

- Reference Box Selection section in the front of this catalog for complete description of bracket and clamp types and features
- BOX-LOC® (MS) Bracket Box is a snap to install. Place the bracket on the open side of the stud first. Slots in the bracket engage the lip of the stud and actually crimp it as you press the bracket on the stud. Barbed hooks dig into the flat side of the stud, quickly locking it in place
- Combination screw heads provide for faster installation
- TKO® knockouts offer greater flexibility with RACO® patented combination 1/2” and 3/4” knockout

4” SQUARE BOXES

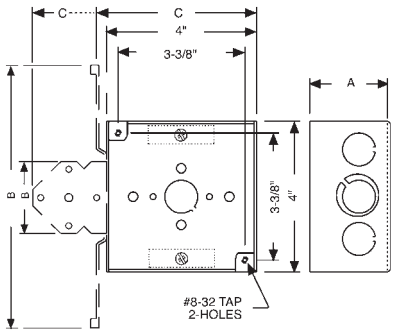

Compliances

- UL – File E195978

All RACO® single gang, two gang, 4” square, and single gang gangable U.L. listed steel boxes are acceptable for use in 2-hour fire rated walls. For additional information, consult U.L. “Fire Resistance Directory” or the U.L. website at www.ul.com

600V Per U.L. 514-A, suitable for use without a bonding jumper in circuits up to 600 volts

211, 8211 | 220, 8220 | 223 | 228 BOX-LOC® | 225

loabofkd=fkclo j^qflk=J=afj bkpflkp

4” SQUARE – 1-1/2” DEEP – WELDED WITH NONMETALLIC SHEATHED CABLE CLAMPS – 21.0 CUBIC INCHES

	CATALOG NUMBER	DESCRIPTION BRACKET & SETBACK	KNOCKOUTS			UBS SUP-PORT	STD. PKG.	UPC BAR CODE
			SIDES		BOTTOM			
			CABLE	COND.	COND.			
600V	211	—	4	4-1/2”, 2 – TKO®	1-1/2”	—	50	—
600V	8211	—	4	4-1/2”, 2 – TKO®	1-1/2”	—	50	|||||||
600V	220	FH, flush	4	2-1/2”, 1 – TKO®	1-1/2”	—	25	—
600V	8220	FH, flush	4	2-1/2”, 1 – TKO®	1-1/2”	—	25	|||||||
600V	223	FM, flush	4	2-1/2”, 1 – TKO®	1-1/2”	—	25	|||||||
600V	225	B, flush	4	2-1/2”, 1 – TKO®	1-1/2”	—	25	—
600V	228*	BOX-LOC® (MS) flush	4	2-1/2”, 1 – TKO®	1-1/2”	Plastic	25	|||||||

*Provided w/far-side support (part #978)

DIMENSIONS

CATALOG NUMBER	A (INSIDE)	B	C
211, 8211	1-1/2”	—	—
220, 8220	1-1/2”	7-3/8”	4-3/8”
223	1-1/2”	6-7/8”	4-3/8”
225	1-1/2”	1-31/32”	6”
228	1-1/2”	4-5/8”	5-1/2”

Application

- Extension rings provide a means for adding additional cubic capacity or as an outlet box for surface conduit

Product Feature

- Combination screw heads provide for faster installation
- Red boxes, covers and extensions for dedicated life safety alarm circuits
- RACO 187 can be positioned to accommodate one or two switch boxes

Compliance

- UL – File E195978

201, 8201

202

203, 8203

187

911-6

l oabofkd=fkc l o j ^qf l k=J=af j bkpf l kp

4” SQUARE EXTENSION RINGS – 1-1/2” DEEP (INSIDE) – DRAWN WITH CONDUIT KO’S – 22.5 CUBIC INCHES

CATALOG NUMBER	DESCRIPTION BRACKET & SETBACK	KNOCKOUTS		STD. PKG.	UPC BAR CODE
		SIDES COND.	BOTTOM COND.		
201	—	12-1/2”	—	50	—
8201	—	12-1/2”	—	25	|||||||
202	—	8-3/4”	—	50	—
203	—	8-1/2”, 4-3/4”	—	50	—
8203	—	8-1/2”, 4-3/4”	—	50	|||||||
187	Attaches to switch boxes	8-1/2”, 4-3/4”	—	25	|||||||
911-6	Painted Red	8-1/2”, 4-3/4”	—	50	—

Applications

- Plenum boxes are used in above-ceiling applications where air-tight enclosures are required

Product Features

- To maintain plenum seal, both RACO® 226 and 239 do not provide ground screw holes
- Cover gasket is PVC foam material

Compliance

- UL – File E195978

226

239

762

l oabofkd=fkc l o j ^qf l k=J=af j bkpf l kp

4” SQUARE PLENUM BOXES & COVER – 1-1/2” & 2-1/8” DEEP (INSIDE) – DRAWN WITH CONDUIT KO’S

CATALOG NUMBER	DESCRIPTION BRACKET & SETBACK	KNOCKOUTS		CU. IN.	STD. PKG.	UPC BAR CODE
		SIDES	BOTTOM			
226	1-1/2” Deep	8-1/2”, 4-3/4”	3-1/2”, 2-3/4”	21.0	50	—
239	2-1/8” Deep	8-1/2”, 4-3/4”	3-1/2”, 2-3/4”	30.3	25	—
762	Gasketed cover for 4” square boxes	—	—	—	50	—

Applications

- Boxes are installed in walls or ceilings for lighting fixtures, switches or receptacles
- Square boxes are used where multiple conductor runs are split into two or more directions to bring power to a number of electrical devices

Product Features

- Combination screw heads provide for faster installation
- TKO® knockouts offer greater flexibility with RACO® patented combination 1/2” and 3/4” knockout
- Red boxes, covers and extensions for dedicated life safety alarm circuits

Compliances

- UL – File E195978

All RACO® single gang, two gang, 4” square, and single gang gangable U.L. listed steel boxes are acceptable for use in 2-hour fire rated walls. For additional information, consult U.L. “Fire Resistance Directory” or the U.L. website at www.ul.com

600V Per U.L. 514-A, suitable for use without a bonding jumper in circuits up to 600 volts

231, 8231

232, 8232

232F

232SM

233, 8233

911-3

loabofkd=fkclo j^qflk=J=afj bkpflkp

	4” SQUARE – 2-1/8” DEEP (INSIDE) – WELDED WITH CONDUIT KO’S – 30.3 CUBIC INCHES							
	CATALOG NUMBER	UBS FARSIDE SUPPORT	KNOCKOUTS		STD. PKG.	RAISED GROUND PROVISION	PIGTAIL	UPC BAR CODE
			SIDES COND.	BOTTOM COND.				
	231	—	8-3/4”	1-1/2”, 4-3/4”	25	No	No	—
	8231	—	8-3/4”	1-1/2”, 4-3/4”	25	No	No	IIIIIIII
600V	232	—	8-1/2”, 4-TKO®	2-1/2”, 2-TKO®	25	Yes	No	—
600V	8232	—	8-1/2”, 4-TKO®	3-1/2”, 2-TKO®	25	No	No	IIIIIIII
600V	232F	Yes	8-1/2”, 4-TKO®	2-1/2”, 2-TKO®	25	Yes	Yes	—
600V	232SM	—	8-1/2”, 4-TKO®	2-1/2”, 2-TKO®	25	Yes	Yes	IIIIIIII
	233	—	8-1”	3-1/2”, 2-3/4”	25	No	No	—
	8233	—	8-1”	3-1/2”, 2-3/4”	25	No	No	IIIIIIII
600V	911-3	—	8-1/2”, 4-TKO®	3-1/2”, 2-TKO®	25	No	No	—

4714, THE INSIDER® will secure nonmetallic sheathed cable in 1/2” KO (See pg. B87)

Applications

- Boxes are installed in walls or ceilings for lighting fixtures, switches or receptacles
- Square boxes are used where multiple conductor runs are split into two or more directions to bring power to a number of electrical devices

Product Features

- Reference Box Selection section in the front of this catalog for complete description of bracket types and features
- BOX-LOC® (MS) Bracket Box is a snap to install. Place the bracket on the open side of the stud first. Slots in the bracket engage the lip of the stud and actually crimp it as you press the bracket on the stud. Barbed hooks dig into the flat side of the stud, quickly locking it in place
- Combination screw heads provide for faster installation
- TKO® knockouts offer greater flexibility with RACO® patented combination 1/2” and 3/4” knockout
- UBS Support - Welded to box, preset bend points to work with wall thickness 2-1/2” to 6”
- Red boxes, covers and extensions for dedicated life safety alarm circuits

4” SQUARE BOXES

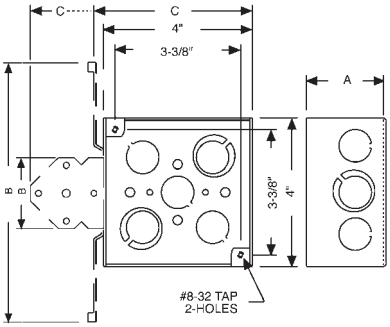

Compliances

- UL – File E195978

All RACO® single gang, two gang, 4” square, and single gang gangable U.L. listed steel boxes are acceptable for use in 2-hour fire rated walls. For additional information, consult U.L. “Fire Resistance Directory” or the U.L. website at www.ul.com

600V Per U.L. 514-A, suitable for use without a bonding jumper in circuits up to 600 volts

232H, 232HS

232HWP

232M

235, 8235
1/2" & 3/4" TKO®

236

237

238
BOX-LOC®

251

911-4

loabofkd=fkclo j ^qflk=J=afj bkpflkp

4” SQUARE – 2-1/8” DEEP – WELDED WITH CONDUIT KO’S – 30.3 CUBIC INCHES								
CATALOG NUMBER	DESCRIPTION BRACKET & SETBACK	KNOCKOUTS		STD. PKG.	UBS SUP-PORT	RSD. GRND. PRVSN.	PIG-TAIL	UPC BAR CODE
		SIDES COND.	BOTTOM COND.					
232H	HM Brkt	8-1/2”, 4-TKO®	2-1/2”, 2-TKO®	25	Yes	Yes	Yes	—
232HS*	HM Brkt	8-1/2”, 4-TKO®	2-1/2”, 2-TKO®	25	Yes	Yes	Yes	—
232HWP	HM Brkt	8-1/2”, 4-TKO®	2-1/2”, 2-TKO®	25	Yes	Yes	No	—
600V 232M	HM Brkt	8-1/2”, 4-TKO®	2-1/2”, 2-TKO®	25	Yes	Yes	Yes	—
600V 235	TS, flush	6-1/2”, 3-TKO®	3-1/2”, 2-TKO®	25	—	—	No	—
8235	TS, flush	6-1/2”, 3-TKO®	3-1/2”, 2-TKO®	25	—	—	No	IIIIIIII
600V 236	FM, flush	6-3/4”	1-1/2”, 4-3/4"	25	—	—	No	IIIIIIII
600V 237	FM, flush	6-1/2”, 3-TKO®	3-1/2”, 2-TKO®	25	—	—	No	IIIIIIII
238	BOX-LOC® (MS) flush	6-1/2”, 3-TKO®	3-1/2”, 2-TKO®	25	Plastic	—	No	IIIIIIII
251	B Brkt	6-1/2”, 3-TKO®	3-1/2”, 2-TKO®	25	—	—	No	—
911-4	FM, flush	6-1/2”, 3-TKO®	3-1/2”, 2-TKO®	25	—	—	No	—

*Box has stranded pigtail assembled

DIMENSIONS			
CATALOG NUMBER	A (INSIDE)	B	C
232H, 232HS	2-1/8”	3-1/4”	4-5/16”
232HWP	2-1/8”	3-1/4”	4-5/16”
232M	2-1/8”	3-1/4”	4-5/16”
235, 8235	2-1/8”	7”	4-5/16”
236	2-1/8”	7-5/8”	4-3/8”
237	2-1/8”	7-5/8”	4-3/8”
238	2-1/8”	4-5/8”	5-1/2”
251	2-1/8”	1-31/32”	6”
911-4	2-1/8”	7-5/8”	4-3/8”

4714, THE INSIDER® will secure nonmetallic sheathed cable in 1/2” KO (See pg. B87)

4" SQUARE BOXES

2-1/8" DEEP WITH CLAMPS (NONMETALLIC AND ARMORED CABLE)

Applications

- Boxes are installed in walls or ceilings for lighting fixtures, switches or receptacles
- Square boxes are used where multiple conductor runs are split into two or more directions to bring power to a number of electrical devices

Product Features

- Reference Box Selection section in the front of this catalog for complete description of bracket and clamp types and features
- BOX-LOC® (MS) Bracket Box is a snap to install. Place the bracket on the open side of the stud first. Slots in the bracket engage the lip of the stud and actually crimp it as you press the bracket on the stud. Barbed hooks dig into the flat side of the stud, quickly locking it in place
- Combination screw heads provide for faster installation
- TKO® knockouts offer greater flexibility with RACO® patented combination 1/2" and 3/4" knockout

4" SQUARE BOXES

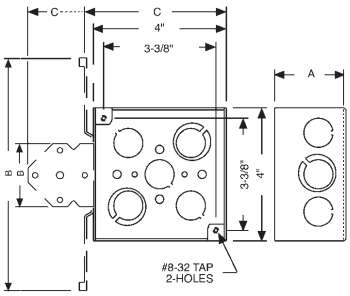

Compliances

- UL – File E195978

All RACO® single gang, two gang, 4" square, and single gang gangable U.L. listed steel boxes are acceptable for use in 2-hour fire rated walls. For additional information, consult U.L. "Fire Resistance Directory" or the U.L. website at www.ul.com

600V Per U.L. 514-A, suitable for use without a bonding jumper in circuits up to 600 volts

242

240, 8240

241, 8241

243 BOX-LOC®

248

249

ORDERING INFORMATION - DIMENSIONS

4" SQUARE – 2-1/8" DEEP WITH NONMETALLIC SHEATHED CABLE CLAMPS – 30.3 CUBIC INCHES

	CATALOG NUMBER	DESCRIPTION BRACKET & SETBACK	KNOCKOUTS SIDES CABLE	KNOCKOUTS SIDES COND.	KNOCKOUTS BOTTOM COND.	STD. PKG.	UPC BAR CODE
600V	240	TS, flush	4	2-1/2", 1 – TKO®	1-1/2"	25	—
600V	8240	TS, flush	4	2-1/2", 1 – TKO®	1-1/2"	25	
600V	242	—	4	4-1/2", 2 – TKO®	1-1/2"	25	—

4" SQUARE – 2-1/8" DEEP WITH ARMORED CABLE/METAL CLAD/FLEX CLAMPS – 30.3 CUBIC INCHES

	CATALOG NUMBER	DESCRIPTION BRACKET & SETBACK	KNOCKOUTS SIDES CABLE	KNOCKOUTS SIDES COND.	KNOCKOUTS BOTTOM COND.	STD. PKG.	UPC BAR CODE
600V	241	TS, flush	4	2-1/2", 2 – TKO®	1-1/2"	25	—
600V	8241	TS, flush	4	2-1/2", 1 – TKO®	1-1/2"	25	
600V	243*	BOX-LOC® (MS) flush	4	2-1/2", 1 – TKO®	1-1/2"	25	
600V	248	—	4	4-1/2", 2 – TKO®	1-1/2"	25	
600V	249	B, flush	4	2-1/2", 1 – TKO®	1-1/2"	25	—

*Provided w/far-side support (part #978)

DIMENSIONS

CATALOG NUMBER	A (INSIDE)	B	C
240, 8240	2-1/8"	7"	4-5/16"
241, 8241	2-1/8"	7"	4-5/16"
242	2-1/8"	—	—
243	2-1/8"	4-5/8"	5-1/2"
248	2-1/8"	—	—
249	2-1/8"	1-31/32"	6"

3-3/4" SQUARE BOXES AND 4" SQUARE RETRO RING®

3-1/2" DEEP/CONDUIT

Applications

- Square boxes are used where multiple conductor runs are split into two or more directions to bring power to a number of electrical devices

Product Features

- 3-3/4" opening in wall allows for margin of error when using a 4" square cover
- Will accept all 4" square covers and mudrings
- Red boxes, covers and extensions for dedicated life safety alarm circuits

3-3/4" SQUARE BOXES

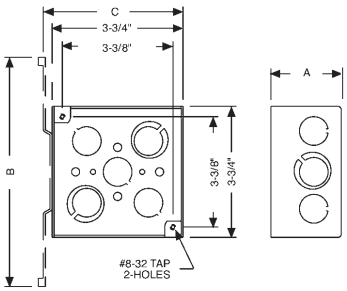

Compliance

- UL – File E195978

Applications

- RETRO-RING® 205RAC and 206RAC are used to position a 4" sq. steel junction box in a sheet rock covered wall cavity
- Use 205RAC in old work, life safety appliance installations
- 206RAC is used in old work installations where one or two devices are required

Product Features

- Works in 3/8" to 1-1/2" thick wall or ceiling applications
- Small footprint is covered by most popular life safety devices
- Steel old work wings allow for secure mounting of box and device to wall
- Includes one wall template per carton

Compliance

- ETL Listed

255

911-1

256

911-2

ORDERING INFORMATION - DIMENSIONS

3-3/4" SQUARE, LARGE CAPACITY BOXES – 3-1/2" DEEP – WELDED WITH CONDUIT KO'S

CATALOG NUMBER	DESCRIPTION BRACKET & SETBACK	KNOCKOUTS		CU. IN.	STD. PKG.	UPC BAR CODE
		SIDES	BOTTOM			
255*	FM, flush	10, 1/2" - 3/4" conc.	4, 1/2" - 3/4" conc.	40.5	10	||||||||
911-1*	FM, flush, Painted Red	10, 1/2" - 3/4" conc.	4, 1/2" - 3/4" conc	40.5	10	—
256*	No bracket	12, 1/2 - 3/4" conc.	4, 1/2" - 3/4" conc.	40.5	25	||||||||
911-2*	No bracket, Painted Red	12, 1/2" - 3/4" conc.	4, 1/2" - 3/4" conc.	40.5	25	—

*Will accept a 4" square cover

DIMENSIONS

CATALOG NUMBER	A	B	C
255	3-1/2"	7- 5/8"	4-1/8"
911-1	3-1/2"	7- 5/8"	4-1/8"
256	3-1/2"	—	—
911-2	3-1/2"	—	—

4714, THE INSIDER® will secure nonmetallic sheathed cable in 1/2" KO (See pg. B87)

205RAC

206RAC, 8206RAC

4" SQUARE RETRO-RINGS®

CATALOG NUMBER	DESCRIPTION	STD. PKG.	UPC BAR CODE
205RAC	Old work ring for alarm installation	20	—
206RAC	Old work ring for device installation	20	—
8206RAC	Old work ring for device installation	10	||||||||

4" SQUARE COVERS

Applications

- Covers are used to close an outlet box
- Raised device covers are used for mounting switches or receptacles

Product Features

- Angled mounting slots compensate up to 12° for box misalignment
- Swivel covers restricted to 20° swing from vertical
- KWIK-HANG® allows easy installa-tion of high bay lighting fixtures. Fixture rests in position while wiring is com-pleted
- Red boxes, covers and extensions for dedicated life safety alarm circuits

Compliances

- UL – File E195978
- CSA – File LR-1082

*5 Bundles of 10

752, 8752, 8752-5

753, 8753, 8753-5

911-8

787, 8787

768, 771, 773-775, 782, 8768, 8773, 8775

772, 8772

785-786

756-759, 767, 8756, 8767

896

897

ORDERING INFORMATION - DIMENSIONS

4" SQUARE COVERS

CATALOG NUMBER	DESCRIPTION	CU. IN. CAP.	STD. PKG.	UPC BAR CODE	RECOMMENDED MAX. SUPPORT LOADS	
					CEILING FAN (DYNAMIC) LBS.	FIXTURE (STATIC) LBS.
752	Flat, blank	—	50	—	No	No
8752	Flat, blank	—	50		No	No
8752-5	Flat, blank	—	50*		No	No
753	Flat, 1/2" KO in center	—	50	—	No	No
8753	Flat, 1/2" KO in center	—	50		No	No
8753-5	Flat, 1/2" KO in center	—	50*		No	No
911-8	Flat, blank, Painted Red	—	50	—	No	No

4" SQUARE DEVICE AND TILE COVERS - SINGLE DEVICE

CATALOG NUMBER	DESCRIPTION	CU. IN. CAP.	STD. PKG.	UPC BAR CODE	RECOMMENDED MAX. SUPPORT LOADS	
					CEILING FAN (DYNAMIC) LBS.	FIXTURE (STATIC) LBS.
767	Raised 1/2" open, ears 2-3/4" O.C.	3.0	25	—	No	50
8767	Raised 1/2" open, ears 2-3/4" O.C.	3.0	25		No	50
756	Raised 5/8" open, ears 2-3/4" O.C.	4.0	100	—	No	50
8756	Raised 5/8" open, ears 2-3/4" O.C.	4.0	25		No	50
759	Raised 3/4" open, ears 2-3/4" O.C.	5.0	25		No	50
757	Raised 1" open, ears 2-3/4" O.C.	6.8	25		No	50
758	Raised 1-1/4" open, ears 2-3/4" O.C.	8.5	25	—	No	50
787	Flat	—	50	—	—	—
8787	Flat	—	50		—	—
771	Raised 1/4"	1.5	100	—	—	—
8771	Raised 1/4"	1.5	25		—	—
772	Raised 1/2" drawn	3.5	100	—	—	—
8772	Raised 1/2" drawn	3.5	50		—	—
782	Raised 1/2" tile	3.5	25		—	—
768	Raised 5/8"	4.5	50	—	—	—
8768	Raised 5/8"	4.5	25		—	—
773	Raised 3/4"	5.5	50	—	—	—
8773	Raised 3/4"	5.5	50		—	—
774	Raised 1"	7.5	25		—	—
775	Raised 1-1/4"	9.5	25	—	—	—
8775	Raised 1-1/4"	9.5	25		—	—
785	Raised 1-1/2"	11.3	25	—	—	—
786	Raised 2"	14.5	25		—	—

SWIVEL FIXTURE COVERS

CATALOG NUMBER	DESCRIPTION	CU. IN. CAP.	STD. PKG.	UPC BAR CODE	RECOMMENDED MAX. SUPPORT LOADS	
					CEILING FAN (DYNAMIC) LBS.	FIXTURE (STATIC) LBS.
896	For 4" sq. boxes,1/2" or 3/4" pipe	—	25	—	No	50
897	KWIK-HANG® For 4" sq. boxes 1/2" or 3/4" pipe	—	25	—	No	50

HUBBELL RACO

4" SQUARE COVERS AND PARTITIONS

Applications

- Covers are used to close an outlet box
- Raised device covers are used for mounting switches or receptacles

Product Feature

- Angled mounting slots compensate up to 12° for box misalignment

Low Voltage Partitions Applications

- Low voltage partitions may be added to conduit-type boxes to divide power from voice/data
- Must be used with raised covers

Product Features

- Partition divides 4" square boxes into two compartments
- Use with two-device covers which have a slot for the partition
- Partition is scored, so it can be broken at the proper depth of box and cover combination
- Helpful hint: Assemble the box with the partition in place before breaking off at the scored tab. This will prevent you from breaking off more tab than needed

Compliances

- UL – File E195978
- CSA – File LR-1082
- Low voltage partitions are not UL listed

791

777-781, 769, 8769-8781, 8777-0

795, 796

706RAC, 707RAC

708, 709

ORDERING INFORMATION - DIMENSIONS

4" SQUARE COMBINATION DEVICE AND TILE COVERS TWO DEVICE

CATALOG NUMBER	DESCRIPTION	CU. IN.	STD. PKG.	UPC BAR CODE
791	Flat	—	50	|||||||
777	Raised 1/4", drawn	3.0	50	—
8777-0	Raised 1/4", drawn	3.0	10	|||||||
778	Raised 1/2", drawn	5.5	50	—
8778	Raised 1/2", drawn	5.5	25	|||||||
769	Raised 5/8", drawn	7.3	50	—
8769	Raised 5/8", drawn	7.3	25	|||||||
779	Raised 3/4", drawn	8.8	50	—
8779	Raised 3/4", drawn	8.8	50	|||||||
780	Raised 1", drawn	12.0	25	|||||||
781	Raised 1-1/4", drawn	15.0	25	—
8781	Raised 1-1/4", drawn	15.0	25	|||||||
795	Raised 1-1/2", welded	15.5	25	—
796	Raised 2", welded	20.5	25	—

LOW VOLTAGE PARTITIONS – FOR 1-1/2" & 2-1/8" DEEP

CATALOG NUMBER	DESCRIPTION	STD. PKG.	UPC BAR CODE
For 1-1/2" Deep Box and 2-Device Raised Cover*:			
706RAC	1/4", 1/2", 3/4" or 1" (777, 778, 8778, 779, 8779, 780)	25	—
708	1-1/4", 1-1/2", or 2" (781, 8781, 795, 796)	25	—
For 2-1/8" Deep Box and 2-Device Raised Cover:*			
707RAC	1/4", 1/2", 3/4" or 1" (777, 778, 8778, 779, 8779, 780)	25	—
709	1-1/4", 1-1/2", or 2" (781, 8781, 795, 796)	25	—

* Boxes, covers, and partitions must be ordered separately
* For 1-1/2" deep box with 5/8" cover, partition not available
* For 2-1/8" deep box with 5/8" cover, use #708 partition
* Partitions are usable but not UL listed for 4-11/16" sq. box

HUBBELL RACO

4" SQUARE EXPOSED WORK COVERS

Application

- Surface covers are used to support switches or receptacles in areas where the box is surface mounted or positioned in exposed work applications.

Product Features

- RACO® exposed work covers include required hardware for mounting the receptacle(s)
- RACO® exposed work covers meet the requirements of the 2008 NEC Article 250.146 (A). No bonding jumper is required for covers with (1) crushed corners (2) two or more device attachment screws and (3) a lockwasher or equivalent
- Hardware and cover are packed in a poly-bag with printed catalog number, compliances and installation instructions

  HELPFUL HINT: Remove a portion of the GFCI receptacle ear to mount device to 4" square cover

  NOTE: 808, 809, 814, 915 covers are not crushed corners and require longer screws to attach to box. Longer screws are provided with covers

Compliances

- UL – File E195978
- CSA – File LR-1082

800C 803C 902C 907C 906C 801C, 811C, 812C

808C 808 814C 814 915C 915

809C 809 804C 807C 805C 806C

831C 816C 830C 815C 817C 810C 813C

ORDERING INFORMATION - DIMENSIONS

4" SQUARE SURFACE COVERS – RAISED 1/2"

CATALOG NUMBER	DESCRIPTION	CU. IN.	STD. PKG.	CRUSHED CORNERS	UPC BAR CODE
800C	1 Toggle switch	6.5	10	Yes	
801C	1 Receptacle 1.406" dia.	6.5	10	Yes	
803C	2 Toggle switches	6.5	10	Yes	
804C	Blank, no holes	6.5	10	Yes	
805C	1 Toggle switch & 1 1.406" dia.	6.5	10	Yes	
806C	1 Duplex & 1 1.406" dia.	6.5	10	Yes	
807C	2 Receptacles, 1.406" dia. holes	6.5	10	Yes	
808C	1 GFCI	6.5	10	Yes	
808	1 GFCI	7.3	10	No	
809C	2 GFCI	6.5	10	Yes	
809	2 GFCI	7.3	10	No	
810C	30-50A Receptacle 2.141" dia.	6.5	10	Yes	
811C	30A locking 1.719" dia.	6.5	10	Yes	
812C	20A Receptacle 1.594" dia.	6.5	10	Yes	
813C	30-60A Receptacle 2.625" dia.	6.5	10	Yes	
814C	1 GFCI & 1 toggle switch	6.5	10	Yes	
814	1 GFCI & 1 toggle switch	7.3	10	No	
815C	1 Receptacle, 2.165" dia. hole, offset	6.5	10	Yes	
816C	1 Receptacle, 2.480" dia. hole	6.5	10	Yes	
817C	1 Receptacle, 2.275" dia. hole	6.5	10	Yes	
830C	1 Receptacle, 2.55" dia. hole	6.5	10	Yes	
831C	1 Duplex , 1 20A Twist Lock® 1.620" dia.	6.5	10	Yes	
902C	1 Duplex receptacle	6.5	10	Yes	
906C	1 Dup. & 1 toggle switch	6.5	10	Yes	
907C	2 Duplex receptacles	6.5	10	Yes	
915C	1 GFCI & 1 duplex receptacle	6.5	10	Yes	
915	GFCI & 1 duplex receptacle	7.3	10	No	

HUBBELL RACO

4-11/16" SQUARE BOXES

1-1/2" AND 2-1/8" DEEP

Applications

- Boxes are used for a wide variety of industrial applications where larger-sized conductors or wiring devices are needed and more volume is required
- Drawn boxes are ideal for exposed work applications (surface mounted wiring)

Product Features

- Reference Box Selection section in the front of this catalog for complete description of bracket and clamp types and features
- BOX-LOC® (MS) Bracket Box is a snap to install. Place the bracket on the open side of the stud first. Slots in the bracket engage the lip of the stud and actually crimp it as you press the bracket on the stud. Barbed hooks dig into the flat side of the stud, quickly locking it in place
- Combination screw heads provide for faster installation
- TKO® knockouts offer greater flexibility with RACO® patented combination 1/2" and 3/4" knockout
- UBS Support - Welded to box, preset bend points to work with wall thickness 2-1/2" to 6"
- Red boxes, covers and extensions for dedicated life safety alarm circuits

4-11/16" SQUARE BOXES

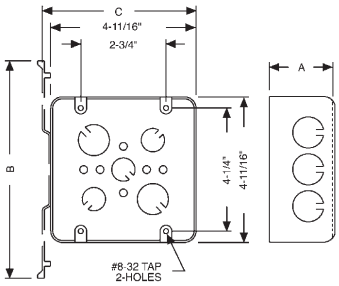

Compliances

- UL – File E195978

600V Per U.L. 514-A, suitable for us without a bonding jumper in circuits up to 600 volts

245

246

247

257, 8257

257SM

257F

257H, 257HS

257M

258

258SM

259

265, 8265

254

266 BOX-LOC®

252

911-12

ORDERING INFORMATION - DIMENSIONS

4-11/16" SQUARE BOXES – 1-1/2" DEEP – DRAWN WITH CONDUIT KO'S – 29.5 CUBIC INCHES

CATALOG NUMBER	DESCRIPTION BRACKET & SETBACK	KNOCKOUTS SIDES COND.	KNOCKOUTS BOTTOM COND.	STD. PKG.	RAISED GROUND PROVISION	UPC BAR CODE
245	—	12-1/2"	3-1/2", 2-3/4"	25	—	—
246	—	10-3/4"	3-1/2", 2-3/4"	25	—	—
247	—	8-1/2", 4- 3/4"	3-1/2", 2-3/4"	25	—	—

4-11/16" SQUARE BOXES – 2-1/8" DEEP – WELDED WITH CONDUIT KO'S – 42.0 CUBIC INCHES

	CAT. NUMBER	DESCR. BRACKET & SETBACK	KNOCKOUTS SIDES COND.	KNOCKOUTS BOTTOM COND.	STD. PKG.	UBS SUP-PORT	PIG-TAIL	RSD. GRND. PRVSN.	UPC BAR CODE
600V	257	—	12-TKO®	1-1/2", 3-TKO®	25	No	—	Yes	—
600V	8257	—	12-TKO®	1-1/2", 3-TKO®	25	No	—	Yes	|||||||
600V	257F	—	12-TKO®	1-1/2", 3-TKO®	20	Yes	Yes	Yes	—
600V	257H	HM	12-TKO®	1-1/2", 3-TKO®	20	Yes	Yes	Yes	—
600V	257HS*	HM	12-TKO®	1-1/2", 3-TKO®	20	Yes	Yes	Yes	—
600V	257M	HM	12-TKO®	1-1/2", 3-TKO®	20	Yes	Yes	Yes	—
600V	257SM	—	12-TKO®	1-1/2", 3-TKO®	25	No	Yes	Yes	|||||||
600V	258	—	8-1"	1-1/2", 3-TKO®	25	No	—	Yes	—
600V	258SM	—	8-1"	1-1/2", 3-TKO®	25	No	Yes	Yes	|||||||
600V	259	—	6-1-1/4"	1-1/2", 3-TKO®	25	No	—	Yes	—
600V	265	—	4-3/4", 4-1"	1-1/2", 3-TKO®	25	No	—	Yes	—
600V	8265	—	4-3/4", 4-1"	1-1/2", 3-TKO®	25	No	—	Yes	|||||||
600V	254	FM brkt.	9-TKO®	1-1/2", 3-TKO®	25	No	—	Yes	|||||||
600V	266	BOX-LOC®	9-TKO, MS flsh.	1-1/2", 3-TKO®	25	No	—	Yes	|||||||
600V	911-12	—	12-TKO®	1-1/2",2-3/4", 2-TKO	25	No	—	No	—

*Box has stranded pigtail assembled

4-11/16" SQUARE BOXES – 2-1/8" DEEP – WELDED WITH ARMORED CABLE/METAL CLAD/FLEX CLAMPS – 42.0 CUBIC INCHES

	CATALOG NUMBER	DESCRIPTION BRACKET & SETBACK	KNOCKOUTS SIDES CABLE	KNOCKOUTS SIDES COND.	KNOCKOUTS BOTTOM	STD. PKG. CODE	UPC BAR
600V	252	—	4	6-TKO	1-1/2"	25	|||||||

DIMENSIONS

CATALOG NUMBER	A (INSIDE)	B	C
245, 246, 247	1-1/2"	—	—
257H, 257HS, 257M	2-1/8"	—	—
266	2-1/8"	4-5/8"	6-3/16"
254	2-1/8"	7-5/8"	5-1/16"
252, 257, 8257, 257F, 257SM 258, 258SM, 259, 265, 8265	2-1/8"	—	—

4714, THE INSIDER® will secure nonmetallic sheathed cable in 1/2" KO (See pg. B87)

HUBBELL RACO

4-11/16” SQUARE COVERS AND EXTENSIONS

1-1/2” DEEP AND 2-1/8” DEEP

Applications

- Extension rings provide a means for adding additional cubic capacity or as an outlet box for surface conduit
- Covers are used to close an outlet box
- Raised device covers are used for mounting switches or receptacles

Product Feature

- Angled mounting slots compensate up to 12º for box misalignment
- Red boxes, covers and extensions for dedicated life safety alarm circuits

Compliances

- UL – File E195978
- CSA – File LR-1082

250

262

832

833, 8833-5

829, 835

837-839, 8837
842-843

898-899

911-11

ORDERING INFORMATION - DIMENSIONS

4-11/16" SQUARE EXTENSION – 1-1/2" DEEP (INSIDE) - DRAWN WITH CONDUIT KO’S – 29.5 CUBIC INCHES

CATALOG NUMBER	DESCRIPTION BRACKET & SETBACK	KNOCKOUTS		STD. PKG.	STD. PKG.
		SIDE COND.	BOTTOM COND.		
250	—	8-1/2", 4-3/4"	—	25	|||||||

4-11/16" SQUARE EXTENSION – 2-1/8" DEEP (INSIDE) – DRAWN WITH CONDUIT KO’S – 43.0 CUBIC INCHES

CATALOG NUMBER	DESCRIPTION BRACKET & SETBACK	KNOCKOUTS		STD. PKG.	STD. PKG.
		SIDE COND.	BOTTOM COND.		
262	—	8-1/2", 4-3/4"	—	25	|||||||

4-11/16" SQUARE COVERS

CATALOG NUMBER	DESCRIPTION	CU. IN. CAP.	STD. PKG.	UPC BAR CODE
832	Flat, blank	—	50	|||||||
833	Flat, 1/2"KO centered	—	50	|||||||
8833-5	Flat, 1/2" KO centered	—	50*	|||||||
911-11	Red, Flat, blank	—	50	—

*5 Bundles of 10

4-11/16" SQUARE FIXTURE COMBINATION DEVICE AND TILE COVERS – SINGLE DEVICE

CATALOG NUMBER	DESCRIPTION	CU. IN. CAP.	STD. PKG.	UPC BAR CODE	RECOMMENDED MAX. SUPPORT LOADS	
					CEILING FAN (DYNAMIC) LBS.	FIXTURE (STATIC) LBS.
829	Raised 1/2”, open, ears 2-3/4” O.C.	3.0	25	|||||||	—	50
835	Raised 5/8”, open, ears 2-3/4” O.C.	4.0	25	—	—	50
837	Raised 1/2"	3.5	25	—	—	—
8837	Raised 1/2”	3.5	25	|||||||	—	—
843	Raised 5/8"	4.5	25	|||||||	—	—
838	Raised 3/4"	5.5	25	—	—	—
839	Raised 1"	7.5	25	—	—	—
842	Raised 1-1/4"	9.5	25	—	—	—
898	Raised 1-1/2"	11.0	20	—	—	—
899	Raised 2"	16.0	20	—	—	—

HUBBELL RACO

4-11/16" SQUARE COVERS

Applications

- Raised device covers are for mounting switches or receptacles
- Exposed work covers are used to support switches or receptacles independent of the box

Product Features

- RACO® exposed work covers meet the requirements of the 2008 NEC Article 250.146 (A). No bonding jumper is required for covers with (1) flat corners (2) two or more device attachment screws and (3) a lockwasher or equivalent
- RACO® exposed work covers include required hardware needed for mounting the device(s)
- Hardware and cover are packed in a poly-bag printed with catalog number, compliances and installation instructions

Compliances

- UL – File E195978
- CSA – File LR-1082

818-820, 840, 841

885

870RAC

972

979

887

888

878

856

857

858

959

ORDERING INFORMATION - DIMENSIONS

4-11/16" SQUARE COMBINATION DEVICE AND TILE COVERS – TWO DEVICE

CATALOG NUMBER	DESCRIPTION	CU. IN.	STD. PKG.	UPC BAR CODE
841	Raised 1/2"	5.5	25	
818	Raised 5/8"	7.3	25	—
840	Raised 3/4"	8.8	25	—
819	Raised 1"	12.0	25	—
820	Raised 1-1/4"	15.0	25	—
885	Raised 1-1/2"	15.5	20	—

4-11/16" SQUARE SURFACE COVERS – RAISED 1/2"

CATALOG NUMBER	DESCRIPTION	CU. IN.	STD. PKG.	UPC BAR CODE
856	1 Decorator dev. or GFCI	10.3	10	
857	2 Decorator dev. or GFCI	10.3	10	
858	1 Toggle & 1 GFCI	10.3	10	
870RAC	1 Toggle switch	10.3	10	
878	30-50A Receptacle 2.141" dia.	10.3	10	
887	20A Receptacle 1.594" dia.	10.3	10	
888	30-60A Receptacle 2.625" dia.	10.3	10	
959	1 Duplex & 1 GFCI	10.3	10	
972	1 Duplex receptacle	10.3	10	
979	2 Duplex receptacles	10.3	10	

HANDY BOXES

1-1/2" AND 1-7/8" DEEP

Applications

- Handy Boxes, also called utility boxes, are used for convenience outlets, switch boxes or small junction boxes
- They are popular for exposed work applications (surface mounted wiring)
- The NEC requires that surface-mounted wiring be enclosed with a protective covering such as EMT conduit

Product Features

- Reference Box Selection section in the front of this catalog for complete description of bracket types and features

650, 8650 655 660, 8660 660SM 611

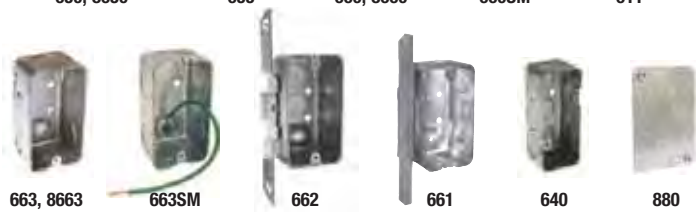

663, 8663 663SM 662 661 640 880

STEEL HANDY BOXES

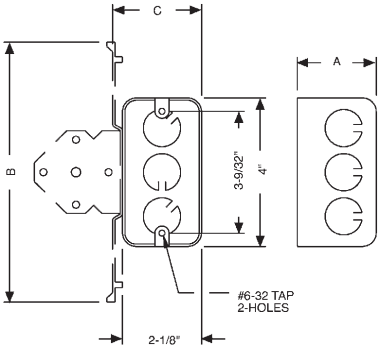

Compliances

- UL – File E195978
- CSA – File LR-1082 (611 only)

ORDERING INFORMATION - DIMENSIONS

4" x 2" HANDY BOXES – 1-1/2" DEEP (INSIDE) – WELDED WITH CONDUIT KO'S – 11.5 CUBIC INCHES

CATALOG NUMBER	DESCRIPTION BRACKET & SETBACK	KNOCKOUTS SIDES	KNOCKOUTS ENDS	KNOCKOUTS BOTTOM	STD. PKG.	PIG-TAIL	RSD. GRND. PRVSN.	UPC BAR CODE
650	—	6-1/2"	2-1/2"	3-1/2"	50	—	—	—
8650	—	6-1/2"	2-1/2"	3-1/2"	50	—	—	|||||||
655	B brkt., 1/4"	3-1/2"	2-1/2"	3-1/2"	50	—	—	—

4" x 2" HANDY BOXES – 1-7/8" DEEP (INSIDE) – DRAWN WITH CONDUIT KO'S – 13.0 CUBIC INCHES

CATALOG NUMBER	DESCRIPTION BRACKET & SETBACK	KNOCKOUTS SIDES	KNOCKOUTS ENDS	KNOCKOUTS BOTTOM	STD. PKG.	PIG-TAIL	RSD. GRND. PRVSN.	UPC BAR CODE
611	Ground screw incl.	6-1/2"	2-1/2"	2-1/2"	50	No	Yes	—
660	—	6-1/2"	2-1/2"	2-1/2"	50	No	Yes	—
8660	—	6-1/2"	2-1/2"	2-1/2"	50	No	Yes	|||||||
660SM	—	6-1/2"	2-1/2"	2-1/2"	50	Yes	Yes	|||||||
661	A brkt., 5/8"	3-1/2"	2-1/2"	2-1/2"	50	No	Yes	|||||||
662	TS brkt., 1/2	3-1/2"	2-1/2"	2-1/2"	50	No	Yes	|||||||
663	—	4-3/4"	2-3/4"	1-3/4"	50	No	Yes	—
8663	—	4-3/4"	2-3/4"	1-3/4"	50	No	Yes	|||||||
663SM	—	4-3/4"	2-3/4"	1-3/4"	50	Yes	Yes	|||||||

3-3/4" x 1-9/16" INDUSTRIAL HANDY BOX & COVER – 1-1/2" DEEP (INSIDE) – DRAWN WITH CONDUIT KO'S – 7.3 CUBIC INCHES

CATALOG NUMBER	DESCRIPTION BRACKET & SETBACK	KNOCKOUTS SIDES	KNOCKOUTS ENDS	KNOCKOUTS BOTTOM	STD. PKG.	UPC BAR CODE
640	—	6-1/2"	2-1/2"	3-1/2"	50	—
880	Blank cover & captive screws	—	—	—	50	—

DIMENSIONS

CATALOG NUMBER	A	B	C
661	1-7/8"	6-7/16"	2-11/32"
662	1-7/8"	7"	2-3/8"
655	1-1/2"	1-31/32"	4"

4714, THE INSIDER® will secure nonmetallic sheathed cable in 1/2" KO (See pg. B87)

HUBBELL RACO

HANDY BOXES

2-1/8" DEEP

Applications

- Handy Boxes, also called utility boxes, are used for convenience outlets, switch boxes or small junction boxes
- They are popular for exposed work applications (surface mounted wiring)
- The NEC requires that surface mounted wiring be enclosed with a protective covering such as EMT conduit

Product Features

- Reference Box Selection section in the front of this catalog for complete description of bracket types and features

STEEL HANDY BOXES

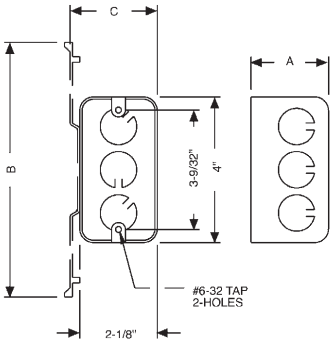

Compliances

- UL – File E195978

All RACO® Handy Box, U.L. listed steel boxes are acceptable for use in 2-hour fire rated walls. For additional information, consult U.L. "Fire Resistance Directory" or the U.L. website at www.ul.com

670RAC, 8670

674

678

671

ORDERING INFORMATION - DIMENSIONS

4" x 2" HANDY BOXES – 2-1/8" DEEP (INSIDE) – WELDED WITH CONDUIT KO'S – 16.5 CUBIC INCHES

CATALOG NUMBER	DESCRIPTION BRACKET & SETBACK	KNOCKOUTS			STD. PKG.	RAISED GROUNDING PROVISION	UPC BAR CODE
		SIDES	ENDS	BOTTOM			
670RAC	—	6-1/2"	2-1/2"	3-1/2"	50	—	—
8670	—	6-1/2"	2-1/2"	3-1/2"	50	—	||||||||
674	—	4-3/4"	2-3/4"	2-3/4"	50	—	||||||||
678	TS brkt., 1/2	3-1/2"	2-1/2"	3-1/2"	50	—	||||||||
671	A brkt., 5/8"	3-1/2"	2-1/2"	3-1/2"	50	—	||||||||

DIMENSIONS

CATALOG NUMBER	A	B	C
670RAC, 8670	2-1/8"	—	—
674	2-1/8"	—	—
678	2-1/8"	7"	2-3/8"
671	2-1/8"	6-7/16"	2-11/32"

4714, THE INSIDER® will secure nonmetallic sheathed cable in 1/2" KO (See pg. B87)

HUBBELL RACO

HANDY BOX COVERS AND EXTENSION

Applications

- Handy Box covers are used to close a Handy Box
- Covers also may be used as single-gang wall plates
- Extension rings provide a means for adding additional cubic capacity or as an outlet box for surface conduit

Product Features

- RACO® Handy Box covers are designed to match the contours of the box
- Cover corners are rounded
- All covers have captive screws

Compliances

- UL – File E195978 (Cat. #861 not UL Listed)
- CSA – File LR-1082 (Covers only)

860

861

865

864

863, 867

653

665

ORDERING INFORMATION - DIMENSIONS

4" x 2" HANDY BOX COVERS – 2-5/16" WIDE x 4-3/16" LENGTH

CATALOG NUMBER	DESCRIPTION	STD. PKG.	UPC BAR CODE
860	Blank	25	
861	1/2" KO centered	25	
865	Toggle switch	25	
864	Duplex receptacle	25	
863	Single receptacle 1.406" dia.	25	
867	20A Receptacle 1.594" dia.	25	

4" x 2" HANDY BOX EXTENSION – 1-1/2" DEEP (INSIDE) – WELDED WITH CONDUIT KO'S – 11.5 CUBIC INCHES

CATALOG NUMBER	DESCRIPTION BRACKET & SETBACK	KNOCKOUTS			STD. PKG.	UPC BAR CODE
		SIDES	ENDS	BOTTOM		
653	—	6-1/2"	2-1/2"	—	25	

4" x 2" HANDY BOX EXTENSION – 1-7/8" DEEP (INSIDE) – DRAWN WITH CONDUIT KO'S – 13.0 CUBIC INCHES

CATALOG NUMBER	DESCRIPTION BRACKET & SETBACK	KNOCKOUTS			STD. PKG.	UPC BAR CODE
		SIDES	ENDS	BOTTOM		
665	—	6-1/2"	2-1/2"	—	50	

SINGLE GANG - 1" DEEP

Application

- Shallow switch boxes are made for use with furring strips and 1/4" paneling

Product Features

- RACO® "D" bracket is pre-scored and can be broken off if needed
- Reference Box Selection section in the front of this catalog for complete description of bracket types and features
- 418 will accept 4" square mud ring or cover

Compliances

- UL – File E195978 (Cat. #404 and #405 not UL Listed)

All RACO® single gang, two gang, 4" square, and single gang gangable U.L. listed steel boxes are acceptable for use in 2-hour fire rated walls. For additional information, consult U.L. "Fire Resistance Directory" or the U.L. website at www.ul.com

404

405

418

ORDERING INFORMATION - DIMENSIONS

3-3/4" x 2" SWITCH BOXES – 1" DEEP – NONGANGABLE – WITH NONMETALLIC SHEATHED CABLE CLAMPS – 6.5 CUBIC INCHES

CATALOG NUMBER	DESCRIPTION BRACKET & SETBACK	KNOCKOUTS				STD. PKG.	UPC BAR CODE
		SIDES COND.	ENDS		BOTTOM COND.		
			CABLE	COND.			
404	Q clamp, 1/4"	—	2	1-1/2"	—	25	
405	Q clamp, 1/4"	—	4	—	—	25	

4" x 4" SWITCH BOX – 1" DEEP – NONGANGABLE – WITH NONMETALLIC SHEATHED CABLE CLAMPS – 14.8 CUBIC INCHES

CATALOG NUMBER	DESCRIPTION BRACKET & SETBACK	KNOCKOUTS				STD. PKG.	UPC BAR CODE
		SIDES COND.	ENDS		BOTTOM COND.		
			CABLE	COND.			
418	(2) Q clamp, 1/4"	—	4	2-1/2"	—	25	

SWITCH BOXES

SINGLE GANG - 1-1/2" AND 2" DEEP

Application

- Switch boxes are used to house wiring devices such as switches or outlets

Product Features

- Gangable switch boxes offer the option of constructing a box to hold two or more devices
- Plaster ears allow box to be used in "old work" applications

STEEL SWITCH BOXES

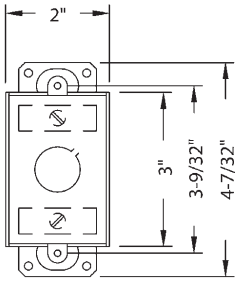

Compliances

- UL – File E195978

All RACO® single gang, two gang, 4" square, and single gang gangable U.L. listed steel boxes are acceptable for use in 2-hour fire rated walls. For additional information, consult U.L. "Fire Resistance Directory" or the U.L. website at www.ul.com

400

410

420, 8420

445

ORDERING INFORMATION - DIMENSIONS

3" x 2" SWITCH BOX – 1-1/2" DEEP – GANGABLE WITH CONDUIT KO'S – 7.5 CUBIC INCHES

CATALOG NUMBER	DESCRIPTION BRACKET & SETBACK	KNOCKOUTS			STD. PKG.	UPC BAR CODE
		SIDES	ENDS	BOTTOM		
400	Ears	—	2-1/2"	1-1/2"	20	

3" x 2" SWITCH BOX – 1-1/2" DEEP – NONGANGABLE WITH NONMETALLIC SHEATHED CABLE CLAMPS – 7.5 CUBIC INCHES

CATALOG NUMBER	DESCRIPTION BRACKET & SETBACK	KNOCKOUTS				STD. PKG.	UPC BAR CODE
		SIDES COND.	ENDS		BOTTOM COND.		
			CABLE	COND.			
410	Ears	—	4	—	—	50	

3" x 2" SWITCH BOX – 2" DEEP – GANGABLE WITH CONDUIT KO'S – 10.0 CUBIC INCHES

CATALOG NUMBER	DESCRIPTION BRACKET & SETBACK	KNOCKOUTS			STD. PKG.	UPC BAR CODE
		SIDES	ENDS	BOTTOM		
420	Ears	4-1/2"	2-1/2"	2-1/2"	50	—
8420	Ears	4-1/2"	2-1/2"	2-1/2"	50	

3" x 2" SWITCH BOX – 2" DEEP – GANGABLE WITH NONMETALLIC SHEATHED CABLE CLAMPS – 10.0 CUBIC INCHES

CATALOG NUMBER	DESCRIPTION BRACKET & SETBACK	KNOCKOUTS				STD. PKG.	UPC BAR CODE
		SIDES COND.	ENDS		BOTTOM COND.		
			CABLE	COND.			
445	Ears	—	4	—	1-1/2"	50	—

4714, THE INSIDER® will secure nonmetallic sheathed cable in 1/2" KO (See pg. B87)

SWITCH BOXES

SINGLE GANG - 2", 2-1/8" AND 2-1/4" DEEP

Application

- Switch boxes are used to house wiring devices such as switches or outlets

Product Features

- Gangable boxes offer the option of constructing a box to hold two or more devices
- Beveled corner boxes are designed to prevent the clamp screws from protruding into back wall
- Plaster ears allow box to be used in "old work" applications
- Reference box selection section in the front of this catalog for complete description of clamp types and features

STEEL SWITCH BOXES

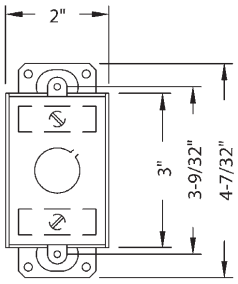

Compliance

- UL – File E195978 (Cat. #513 not UL Listed)

All RACO® single gang, two gang, 4" square, and single gang gangable U.L. listed steel boxes are acceptable for use in 2-hour fire rated walls. For additional information, consult U.L. "Fire Resistance Directory" or the U.L. website at www.ul.com

440

513

471, 8471

473

487

ORDERING INFORMATION - DIMENSIONS

3" x 2" SWITCH BOX – 2" DEEP – GANGABLE WITH ARMORED CABLE/METAL CLAD/ FLEX CLAMPS – 10.0 CUBIC INCHES

CATALOG NUMBER	DESCRIPTION BRACKET & SETBACK	KNOCKOUTS				STD. PKG.	UPC BAR CODE
		SIDES COND.	ENDS		BOTTOM COND.		
			CABLE	COND.			
440	Ears	—	4	—	1-1/2"	50	—

3" x 2" SWITCH BOX – 2-1/8" DEEP – NONGANGABLE – "SNAP IN CLIP" "OLD WORK" WITH CONDUIT KO'S – 11.0 CUBIC INCHES

CATALOG NUMBER	DESCRIPTION BRACKET & SETBACK	KNOCKOUTS			STD. PKG.	UPC BAR CODE
		SIDES	ENDS	BOTTOM		
513	Old Work With Snap In Clips And Ears	4-1/2"	2-1/2"	2-1/2"	24	

3" x 2" SWITCH BOXES – 2-1/4" DEEP – GANGABLE – BEVELED CORNERS WITH NONMETALLIC SHEATHED CABLE CLAMPS – 10.5 CUBIC INCHES

CATALOG NUMBER	DESCRIPTION BRACKET & SETBACK	KNOCKOUTS				STD. PKG.	UPC BAR CODE
		SIDES COND.	ENDS		BOTTOM COND.		
			CABLE	COND.			
471	One screw, Ears	—	4	—	1-1/2"	50	—
8471	One screw, Ears	—	4	—	1-1/2"	50	
473	Level bumps	—	4	2-1/2"	1-1/2"	20	
487	Old work, Tigergrip®	—	4	—	1-1/2"	20	

SWITCH BOXES

SINGLE GANG - 2-1/2" DEEP

Application

- Switch boxes are used to house wiring devices such as switches or outlets

Product Features

- Reference Box Selection section in the front of this catalog for complete description of bracket types and features
- Gangable switch boxes offer the option of constructing a box to hold two or more devices
- Plaster ears allow the box to be used in "old work" applications

500, 503, 8500

501

504, 8504, 505

502

506

509

508

STEEL SWITCH BOXES

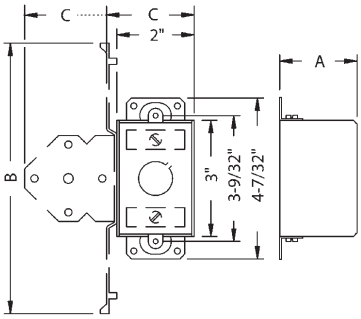

Compliance

- UL – File E195978

All RACO® single gang, two gang, 4" square, and single gang gangable U.L. listed steel boxes are acceptable for use in 2-hour fire rated walls. For additional information, consult U.L. "Fire Resistance Directory" or the U.L. website at www.ul.com

ORDERING INFORMATION - DIMENSIONS

3" x 2" SWITCH BOXES – 2-1/2" DEEP – GANGABLE WITH CONDUIT KO'S – 12.5 CUBIC INCHES

CATALOG NUMBER	DESCRIPTION BRACKET & SETBACK	KNOCKOUTS			STD. PKG.	UPC BAR CODE
		SIDES	ENDS	BOTTOM		
500	Ears	4-1/2"	2-1/2"	2-1/2"	50	—
8500	Ears	4-1/2"	2-1/2"	2-1/2"	25	||||||||
501	Without ears	4-1/2"	2-1/2"	2-1/2"	50	||||||||
502	B brkt., 5/8"	4-1/2"	2-1/2"	2-1/2"	10	—
503	Ears	4-1/2"	2-3/4"	2-1/2"	50	—
504	TS brkt., 1/2"	2-1/2"	2-1/2"	2-1/2"	50	—
8504	TS brkt., 1/2"	2-1/2"	2-1/2"	2-1/2"	20	||||||||
505	TS brkt., 1/2"	2-1/2"	2-3/4"	2-1/2"	50	—
506	Old work, Tigergrip®	—	2-1/2"	2-1/2"	20	||||||||
509	Old work	—	2-1/2"	2-1/2"	20	||||||||

3" x 2" SWITCH BOX – 2-1/2" DEEP – NONGANGABLE WITH CONDUIT KO'S – 12.5 CUBIC INCHES

CATALOG NUMBER	DESCRIPTION BRACKET & SETBACK	KNOCKOUTS				STD. PKG.	UPC BAR CODE
		SIDES COND.	ENDS		BOTTOM COND.		
			CABLE	COND.			
508	Old work, 3/4" sheet rock max.	—	—	2-1/2"	—	20	||||||||

DIMENSIONS

CATALOG NUMBER	A	B	C
500, 8500	2-1/2"	—	—
501	2-1/2"	—	—
502	2-1/2"	1-31/32"	4"
503	2-1/2"	—	—
504, 8504	2-1/2"	7"	2-13/64"
505	2-1/2"	7"	2-13/64"
506	2-1/2"	—	—
508	2-1/2"	—	—
509	2-1/2"	—	—

4714, THE INSIDER® will secure nonmetallic sheathed cable in 1/2" KO (See pg. B87)

HUBBELL RACO

SINGLE GANG - 2-1/2" DEEP WITH NONMETALLIC CABLE CLAMPS

Application

- Switch boxes are used to house wiring devices such as switches or outlets

Product Features

- Reference Box Selection section in the front of this catalog for complete description of bracket and clamp types and features
- Gangable switch boxes offer the option of constructing a box to hold two or more devices
- Plaster ears allow box to be used in "old work" applications

519, 8519 528, 8528 531, 8531 540

529 517 512 596 545

STEEL SWITCH BOXES

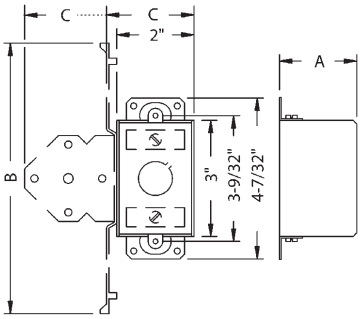

Compliance

- UL – File E195978

All RACO® single gang, two gang, 4" square, and single gang gangable U.L. listed steel boxes are acceptable for use in 2-hour fire rated walls. For additional information, consult U.L. "Fire Resistance Directory" or the U.L. website at www.ul.com

ORDERING INFORMATION - DIMENSIONS

3" x 2" SWITCH BOXES – 2-1/2" DEEP – GANGABLE WITH NONMETALLIC SHEATHED CABLE CLAMPS – 12.5 CUBIC INCHES

CATALOG NUMBER	DESCRIPTION BRACKET & SETBACK	KNOCKOUTS				STD. PKG.	UPC BAR CODE
		SIDE COND.	ENDS CABLE	ENDS COND.	BOTTOM COND		
512	Ears, Old work	—	4	—	1-1/2"	20	—
517	Ears, Old work, Tigergrip®	—	4	—	1-1/2"	20	|||||||
519	Ears	—	4	—	1-1/2"	50	—
8519	Ears	—	4	—	1-1/2"	50	|||||||
528	Level bumps	—	4	2-1/2"	1-1/2"	50	—
8528	Level bumps	—	4	2-1/2"	1-1/2"	25	|||||||
529	LB brkt., 5/8"	—	4	2-1/2"	1-1/2"	20	|||||||
531	TS brkt., 1/2"	—	4	2-1/2"	1-1/2"	50	—
8531	TS brkt., 1/2"	—	4	2-1/2"	1-1/2"	50	|||||||
540	B brkt., 1/4"	—	4	2-1/2"	1-1/2"	50	—

3" x 2" SWITCH BOXES – 2-1/2" DEEP – NONGANGABLE WITH NONMETALLIC SHEATHED CABLE CLAMPS – 12.5 CUBIC INCHES

CATALOG NUMBER	DESCRIPTION BRACKET & SETBACK	KNOCKOUTS				STD. PKG.	UPC BAR CODE
		SIDE COND.	ENDS CABLE	ENDS COND.	BOTTOM COND.		
545	Ears, Old work, 3/4" sheet rock max.	—	4	2-1/2"	—	20	|||||||
596	Without ears	—	4	2-1/2"	—	50	—

DIMENSIONS

CATALOG NUMBER	A	B	C
512	2-1/2"	—	—
517	2-1/2"	—	—
519, 8519	2-1/2"	—	—
528, 8528	2-1/2"	—	—
529	2-1/2"	1-31/32"	5-3/64"
531, 8531	2-1/2"	7"	2-13/64"
540	2-1/2"	1-31/32"	4"
545	2-1/2"	—	—
596	2-1/2"	—	—

SWITCH BOXES

SINGLE GANG - 2-1/2" DEEP WITH ARMORED CABLE CLAMPS

Application

- Switch boxes are used to house wiring devices such as switches or outlets

Product Features

- Reference Box Selection section in the front of this catalog for complete description of bracket and clamp types and features
- Gangable switch boxes offer the option of constructing a box to hold two or more devices
- Plaster ears allow box to be used in "old work" applications

STEEL SWITCH BOXES

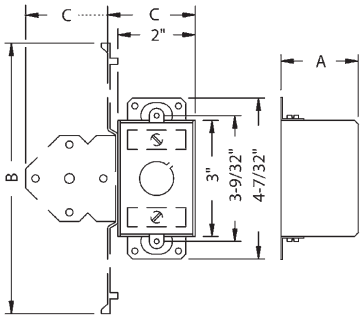

Compliance

- UL – File E195978

All RACO® single gang, two gang 4" square, and single gang gangable boxes U.L. listed steel boxes are acceptable for use in 2-hour fire rated walls. For additional information, consult U.L. "Fire Resistance Directory" or the U.L. website at www.ul.com

518, 8518

524, 8524

522, 8522

523, 8523

526

ORDERING INFORMATION - DIMENSIONS

3" x 2" SWITCH BOXES – 2-1/2" DEEP – GANGABLE WITH ARMORED CABLE/METAL CLAD/ FLEX CLAMPS – 12.5 CUBIC INCHES

CATALOG NUMBER	DESCRIPTION BRACKET & SETBACK	KNOCKOUTS				STD. PKG.	UPC BAR CODE
		SIDES	ENDS		BOTTOM		
		COND.	CABLE	COND.	COND.		
518	Ears	—	4	—	1-1/2"	50	—
8518	Ears	—	4	—	1-1/2"	50	||||||||
522	LB brkt., 5/8"	—	4	2-1/2"	1-1/2"	50	—
8522	LB brkt., 5/8"	—	4	2-1/2"	1-1/2"	50	||||||||
523	Ears, Old work, Griptite	—	4	—	1-1/2"	—	||||||||
8523	Ears, Old work, Griptite	—	4	—	1-1/2"	50	||||||||
524	TS brkt., 1/2"	—	4	2-1/2"	1-1/2"	50	—
8524	TS brkt., 1/2"	—	4	2-1/2"	1-1/2"	50	||||||||

3" x 2" SWITCH BOX – 2-1/2" DEEP – NONGANGABLE WITH ARMORED CABLE/METAL CLAD/ FLEX CLAMPS – 12.5 CUBIC INCHES

CATALOG NUMBER	DESCRIPTION BRACKET & SETBACK	KNOCKOUTS				STD. PKG.	UPC BAR CODE
		SIDES	ENDS		BOTTOM		
		COND.	CABLE	COND.	COND.		
526	Ears, Old work, 3/4" sheet rock max.	—	4	—	—	20	||||||||

DIMENSIONS

CATALOG NUMBER	A	B	C
518, 8518	2-1/2"	—	—
522, 8522	2-1/2"	1-31/32"	5-3/64"
523, 8523	2-1/2"	—	—
524, 8524	2-1/2"	7"	2-13/64"
526	2-1/2"	1-3/8"	3-13/32"

HUBBELL RACO

SWITCH BOXES

SINGLE GANG - 2-3/4" AND 2-27/32" DEEP

Application

- Switch boxes are used to house wiring devices such as switches or outlets

Product Features

- RACO® 353, 355 and 8355 are extra-wide for ease of GFCI device installation
- Reference Box Selection section in the front of this catalog for complete description of bracket and clamp types and features
- Plaster ears allow the box to be used in "old work" applications

CAT. NO. 353, 355, 8355

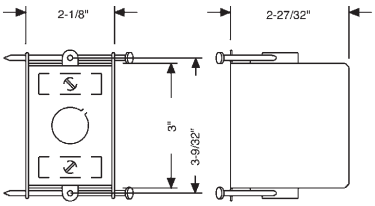

STEEL SWITCH BOXES

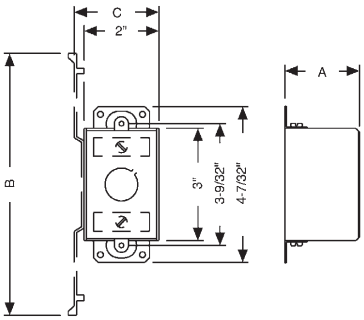

Compliance

- UL – File E195978

All RACO® single gang, two gang, 4" square, and single gang gangable U.L. listed steel boxes are acceptable for use in 2-hour fire rated walls. For additional information, consult U.L. "Fire Resistance Directory" or the U.L. website at www.ul.com

353

355, 8355

560, 8560, 565

561

562

ORDERING INFORMATION - DIMENSIONS

3" x 2-1/8" SWITCH BOX – 2-27/32" DEEP – NONGANGABLE WITH ARMORED CABLE/ METAL CLAD/FLEX CLAMPS – 15.8 CUBIC INCHES

CATALOG NUMBER	DESCRIPTION BRACKET & SETBACK	KNOCKOUTS				STD. PKG.	UPC BAR CODE
		SIDES	ENDS		BOTTOM		
		COND.	CABLE	COND.	COND.		
353	S brkt., Nails	—	4	—	1-1/2"	50	

3" x 2-1/8" SWITCH BOX – 2-27/32" DEEP – NONGANGABLE WITH NONMETALLIC SHEATHED CABLE CLAMPS – 15.8 CUBIC INCHES

CATALOG NUMBER	DESCRIPTION BRACKET & SETBACK	KNOCKOUTS				STD. PKG.	UPC BAR CODE
		SIDES	ENDS		BOTTOM		
		COND.	CABLE	COND.	COND.		
355	S brkt., Nails	—	4	—	1-1/2"	50	—
8355	S brkt., Nails	—	4	—	1-1/2"	20	

3" x 2" SWITCH BOXES – 2-3/4" DEEP – GANGABLE WITH CONDUIT KO'S – 14.0 CUBIC INCHES

CATALOG NUMBER	DESCRIPTION BRACKET & SETBACK	KNOCKOUTS			STD. PKG.	UPC BAR CODE
		SIDES	ENDS	BOTTOM		
560	Ears	4-1/2"	2-1/2"	2-1/2"	50	—
8560	Ears	4-1/2"	2-1/2"	2-1/2"	50	
565	Ears	4-3/4"	2-3/4"	2-1/2"	50	—
561	Without ears	4-1/2"	2-1/2"	2-1/2"	50	—
562	TS brkt., 1/2"	2-1/2"	2-1/2"	2-1/2"	50	—

DIMENSIONS

CATALOG NUMBER	A	B	C
560, 8560	2-3/4"	—	—
561	2-3/4"	—	—
562	2-3/4"	7"	2-13/64"
565	2-3/4"	—	—

4714, THE INSIDER® will secure nonmetallic sheathed cable in 1/2" KO (See pg. B87)

HUBBELL RACO

SWITCH BOXES

SINGLE GANG - 2-3/4" DEEP

Application

- Switch boxes are used to house wiring devices such as switches or outlets

Product Features

- Reference Box Selection section in the front of this catalog for complete description of bracket and clamp types and features
- Plaster ears allow the box to be used in "old work" applications

STEEL SWITCH BOXES

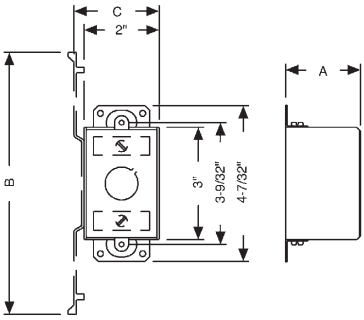

Compliances

- UL – File E195978

All RACO® single gang, two gang, 4" square, and single gang gangable U.L. listed steel boxes are acceptable for use in 2-hour fire rated walls. For additional information, consult U.L. "Fire Resistance Directory" or the U.L. website at www.ul.com

567

564

570RAC

574

ORDERING INFORMATION - DIMENSIONS

3" x 2" SWITCH BOXES – 2-3/4" DEEP – GANGABLE WITH NONMETALLIC SHEATHED CABLE CLAMPS – 14.0 CUBIC INCHES

CATALOG NUMBER	DESCRIPTION BRACKET & SETBACK	KNOCKOUTS				STD. PKG.	UPC BAR CODE
		SIDES COND.	ENDS		BOTTOM COND.		
			CABLE	COND.			
567	Ears	4-1/2"	4	2-1/2"	1-1/2"	50	
564	TS brkt., 1/2"	2-1/2"	4	2-1/2"	1-1/2"	50	

3" x 2" SWITCH BOXES – 2-3/4" DEEP – GANGABLE WITH ARMORED CABLE/METAL CLAD/ FLEX CLAMPS – 14.0 CUBIC INCHES

CATALOG NUMBER	DESCRIPTION BRACKET & SETBACK	KNOCKOUTS				STD. PKG.	UPC BAR CODE
		SIDES COND.	ENDS		BOTTOM COND.		
			CABLE	COND.			
570RAC	Ears	4-1/2"	4	2-1/2"	1-1/2"	50	—
574	TS brkt., 1/2"	2-1/2"	4	2-1/2"	1-1/2"	25	

DIMENSIONS

CATALOG NUMBER	A	B	C
567	2-3/4"	—	—
564	2-3/4"	7"	2-13/64"
570RAC	2-3/4"	—	—
574	2-3/4"	7"	2-13/64"

HUBBELL RACO

SINGLE GANG - 3-1/2" DEEP

Application

- Switch boxes are used to house wiring devices such as switches or outlets

Product Features

- Reference Box Selection section in the front of this catalog for complete description of bracket and clamp types and features
- Gangable switch boxes offer the option of constructing a box to hold two or more devices
- Plaster ears allow the box to be used in "old work" applications

STEEL SWITCH BOXES

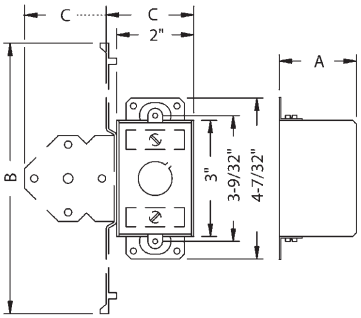

Compliance

- UL – File E195978

All RACO® single gang, two gang, 4" square, and single gang gangable U.L. listed steel boxes are acceptable for use in 2-hour fire rated walls. For additional information, consult U.L. "Fire Resistance Directory" or the U.L. website at www.ul.com

ORDERING INFORMATION - DIMENSIONS

3" x 2" SWITCH BOXES – 3-1/2" DEEP – GANGABLE WITH NONMETALLIC SHEATHED CABLE CLAMPS – 18.0 CUBIC INCHES

CATALOG NUMBER	DESCRIPTION BRACKET & SETBACK	KNOCKOUTS SIDES COND.	ENDS CABLE	ENDS COND.	BOTTOM COND.	STD. PKG.	UPC BAR CODE
601	Ears	4-1/2"	4	2-1/2"	1-1/2"	25	—
8601	Ears	4-1/2"	4	2-1/2"	1-1/2"	25	||||||||
603	B brkt., 5/8"	4-1/2"	4	2-1/2"	1-1/2"	25	—
605	TS brkt., 1/2"	4-1/2"	4	2-1/2"	1-1/2"	25	||||||||

3" x 2" SWITCH BOXES – 3-1/2" DEEP – GANGABLE WITH ARMORED CABLE/METAL CLAD/ FLEX CLAMPS – 18.0 CUBIC INCHES

CATALOG NUMBER	DESCRIPTION BRACKET & SETBACK	KNOCKOUTS SIDES COND.	ENDS CABLE	ENDS COND.	BOTTOM COND.	STD. PKG.	UPC BAR CODE
600	Ears	4-1/2"	4	2-1/2"	1-1/2"	25	—
604	TS brkt., 1/2"	4-1/2"	4	2-1/2"	1-1/2"	25	||||||||

3" x 2" SWITCH BOXES – 3-1/2" DEEP – GANGABLE WITH CONDUIT KO'S – 18.0 CUBIC INCHES

CATALOG NUMBER	DESCRIPTION BRACKET & SETBACK	KNOCKOUTS SIDES	ENDS	BOTTOM	STD. PKG.	UPC BAR CODE
590	Ears	4-1/2"	4-1/2"	1-1/2"	50	—
8590	Ears	4-1/2"	4-1/2"	1-1/2"	25	||||||||
591	Ears	4-3/4"	4-3/4"	1-1/2"	50	||||||||
592	Without ears	4-1/2"	4-1/2"	1-1/2"	50	—

DIMENSIONS

CATALOG NUMBER	A	B	C
590, 8590	3-1/2"	—	—
591	3-1/2"	—	—
592	3-1/2"	—	—
600	3-1/2"	—	—
601, 8601	3-1/2"	—	—
603	3-1/2"	1-31/32"	4"
604	3-1/2"	7"	2-13/64"
605	3-1/2"	7"	2-13/64"

4714, THE INSIDER® will secure nonmetallic sheathed cable in 1/2" KO (See pg. B87)

SWITCH BOXES AND WALL PLATES

TWO GANG, 2-1/8" DEEP

Applications

- Installers can save time and cut installation costs with two gang switch boxes
- Larger capacity boxes are ideal for today's designs where there is a need to install two devices at one location
- Drawn boxes are ideal for exposed work applications (surface mounted wiring)

Product Features

- 681, 685 bracketed boxes are set back 1/2" eliminating the need for a plaster ring
- Reference Box Selection section in the front of this catalog for complete description of bracket and clamp types and features
- Covers are unpainted and manufactured from pre-galvanized steel

TWO GANG SWITCH BOXES

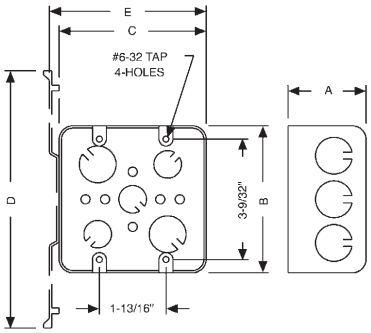

Compliance

- UL – File E195978

All RACO® single gang, two gang, 4" square, and single gang gangable U.L. listed steel boxes are acceptable for use in 2-hour fire rated walls. For additional information, consult U.L. "Fire Resistance Directory" or the U.L. website at www.ul.com

ORDERING INFORMATION - DIMENSIONS

4" SQUARE TWO DEVICE SWITCH BOX – 2-1/8" DEEP – DRAWN WITH CONDUIT KO'S – 30.3 CUBIC INCHES

CATALOG NUMBER	DESCRIPTION BRACKET & SETBACK	KNOCKOUTS		STD. PKG.	UPC BAR CODE
		SIDES	BOTTOM		
680	—	12-1/2"	5-1/2"	25	||||||||
681	TS brkt., 1/2"	9-1/2"	5-1/2"	25	||||||||
683	—	8-1/2",4-3/4"	3-1/2", 2-3/4"	25	||||||||
685	TS brkt., 1/2"	6-3/4"	3-1/2", 2-3/4"	25	||||||||

4" SQUARE – TWO-DEVICE WALL PLATES*

CATALOG NUMBER	DESCRIPTION	STD. PKG.	UPC BAR CODE
871	2 Toggle switches	25	||||||||
872	1 Dup. & 1 Toggle switch	25	||||||||
873	2 Duplex receptacles	25	||||||||

*Cover face surface is 1/4" from wall when installed

DIMENSIONS

CATALOG NUMBER	A	B	C	D	E
680	2-1/8"	4"	4"	—	—
681	2-1/8"	4"	4"	7"	4-9/32"
683	2-1/8"	4"	4"	—	—
685	2-1/8"	4"	4"	7"	4-9/32"

4714, THE INSIDER® will secure nonmetallic sheathed cable in 1/2" KO (See pg. B87)

HUBBELL RACO

SWITCH BOXES AND PARTITIONS

MULTI-GANG - 2-1/2" DEEP

Applications

- Installers can save time and cut installation costs with multi-gang switch boxes
- These larger capacity boxes are ideal for today's designs where there is a need to install more than two devices at one location

Product Features

- Reference Box Selection section in the front of this catalog for complete description of bracket types and features

MULTI-GANG SWITCH BOXES

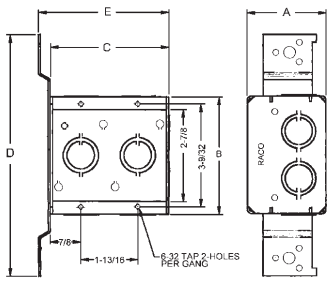

Compliance

- UL – File E195978 (Cat. #971 not UL Listed)

686

687

971

ORDERING INFORMATION - DIMENSIONS

MULTI-DEVICE SWITCH BOXES – 2-1/2" DEEP – WELDED WITH CONDUIT KO'S

CATALOG NUMBER	DESCRIPTION BRACKET & SETBACK	KNOCKOUTS			CU. IN. CAP.	STD. PKG.	UPC BAR CODE
		ENDS	SIDES	BOTTOM			
686	3-Gang 1/2" setback	2-1/2", 2-3/4"	6-1/2", 6-3/4"	3-1/2", 3-3/4"	47.8	10	||||||||
687	4-Gang 1/2" setback	2-1/2", 2-3/4"	8-1/2", 8-3/4"	4-1/2", 4-3/4"	63.5	10	||||||||
971	Low voltage partition	—	—	—	—	25	—

DIMENSIONS

CATALOG NUMBER	A	B	C	D	E
686	2-1/2"	3-3/4"	5-9/16"	7-5/8"	5-31/32"
687	2-1/2"	3-3/4"	7-3/8"	7-5/8"	7-25/32"

4714, THE INSIDER® will secure nonmetallic sheathed cable in 1/2" KO (See pg. B87)

HUBBELL RACO

GANG BOXES

1-5/8" AND 2-1/2" DEEP

Application

- Gang boxes are used where a number of wiring devices are to be centrally located

Product Features

- Gang boxes save time in installation, no need to gang boxes together
- Have 1/2" and 3/4" concentric KO's for use with a wide variety of wiring methods
- Bottom KO pattern, 3-1/2" and 2-3/4" at either end of box
- Accept two styles of covers, flat and 3/4" raised device cover
- Device covers also fit next smaller box, i.e. three-gang cover fits two or three-gang box
- Use low voltage partitions #974 or #949

STEEL GANG BOXES

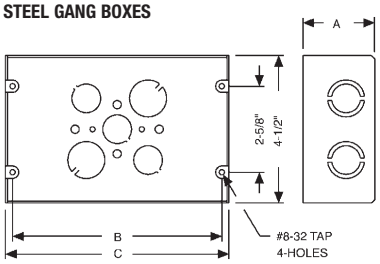

Compliance

- UL – File E195978

941 through 945

951 through 958

ORDERING INFORMATION - DIMENSIONS

GANG BOXES – 1-5/8" & 2-1/2" DEEP – WELDED WITH CONDUIT KO'S

CATALOG NUMBER	NO. OF GANGS	KNOCKOUTS TOP &* BOTTOM	KNOCKOUTS SIDES*	KNOCKOUTS BACK	CU. IN.	STD. PKG.	UPC BAR CODE
941	2	4-3/4", 4-conc.	4-conc.	3-1/2", 2-3/4"	70.0	5	
942	3	8-3/4", 2-conc.	4-conc.	6-1/2", 4-3/4"	90.0	5	
943	4	4-3/4", 4-conc.	4-conc.	6-1/2", 4-3/4"	110.0	5	
944	5	6-3/4", 4-conc.	4-conc.	6-1/2", 4-3/4"	130.0	5	
945	6	6-3/4", 6-conc.	4-conc.	6-1/2", 4-3/4"	150.0	1	
951	2	8-conc.	4-conc.	3-1/2", 2-3/4"	47.0	5	—
952	3	10-conc.	4-conc.	6-1/2", 4-3/4"	60.0	5	
953	4	12-conc.	4-conc.	6-1/2", 4-3/4"	72.8	5	
954	5	14-conc.	4-conc.	6-1/2", 4-3/4"	85.8	5	—
955	6	16-conc.	4-conc.	6-1/2", 4-3/4"	98.5	1	—
956	7	18-conc.	4-conc.	6-1/2", 4-3/4"	111.5	1	—
957	8	20-conc.	4-conc.	6-1/2", 4-3/4"	124.5	1	—
958	9	22-conc.	4-conc.	6-1/2", 4-3/4"	137.3	1	—

*1-5/8" deep boxes, concentric KO's are 1/2" & 3/4" *2-1/2" deep boxes, concentric KO's are 3/4" & 1"

DIMENSIONS

CATALOG NUMBER	NO. OF GANGS	A	B	C
941	2	2-1/2"	6-3/8"	6-13/16"
942	3	2-1/2"	8-3/16"	8-5/8"
943	4	2-1/2"	10"	10-7/16"
944	5	2-1/2"	11-13/16"	12-1/4"
945	6	2-1/2"	13-5/8"	14-1/16"
951	2	1-5/8"	6-3/8"	6-13/16"
952	3	1-5/8"	8-3/16"	8-5/8"
953	4	1-5/8"	10"	10-7/16"
954	5	1-5/8"	11-13/16"	12-1/4"
955	6	1-5/8"	13-5/8"	14-1/16"
956	7	1-5/8"	15-7/16"	15-7/8"
957	8	1-5/8"	17-1/4"	17-11/16"
958	9	1-5/8"	19-1/16"	19-1/2"

4714, THE INSIDER® will secure nonmetallic sheathed cable in 1/2" KO (See pg. B87)

HUBBELL RACO

Application

- Gang box covers permit the mounting of devices

Product Feature

- Device covers also fit next smaller box, i.e. three gang cover fits two or three gang box

Compliance

- UL – File E195978 (Cat. #974 and 949 not UL Listed)

846

823

974

949

ORDERING INFORMATION - DIMENSIONS

FLAT, BLANK COVERS FOR GANG BOXES

CATALOG NUMBER	NO. OF GANGS	WIDTH	CU. IN.	STD. PKG.	UPC BAR CODE
844	2	7-1/16"	—	5	—
845	3	8-7/8"	—	5	—
846	4	10-11/16"	—	5	—
847	5	12-1/2"	—	1	—
848	6	14-5/16"	—	1	—
849	7	16-1/8"	—	1	—
850	8	17-15/16"	—	1	—
851	9	19-3/4"	—	1	—

DEVICE COVERS FOR GANG BOXES RAISED 3/4"

CATALOG NUMBER	NO. OF GANGS	WIDTH	CU. IN.	STD. PKG.	UPC BAR CODE
821	2	7-1/16"	10.0	5	—
822	3	8-7/8"	15.3	5	|||||||
823	4	10-11/16"	20.3	5	|||||||
824	5	12-1/2"	25.5	5	—
825	6	14-5/16"	30.5	1	—
826	7	16-1/8"	35.5	1	—
827	8	17-15/16"	40.8	1	—
828	9	19-3/4"	45.8	1	—

LOW VOLTAGE PARTITION FOR GANG BOXES

CATALOG NUMBER	DESCRIPTION	STD. PKG.	UPC BAR CODE
974	For 1-5/8" Deep	25	—
949	For 2-1/2" Deep	25	—

STEEL CONCRETE RINGS

Applications

- Concrete rings are used with poured deck (floor) in high-rise construction
- These boxes are installed on wooden or steel concrete forms. After the forms are removed, the box is flush with the concrete
- RACO® Ceiling Fan Concrete Ring 284 is listed for support of ceiling fans

Product Features

- Flat sides provide excellent contact for locknuts
- External ears are used to nail the ring to the wood form
- The top cover is removable for before-pour work
- Ears on inside of box are for fixtures
- Waxed fixture ears prevent concrete from interfering with the threads
- Variety of cover plates are available
- Cover plate must be ordered separately with all (except 280 which includes a 891 cover) RACO® concrete rings

STEEL CONCRETE RINGS

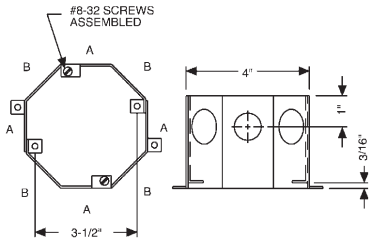

Compliance

- UL – File E195978

270RAC, 271, 272, 273, 274, 275, 276, 277, 278, 279

284 GORILLA-RING™

*280 shown with 918 BARS

890

891

892

893

ORDERING INFORMATION - DIMENSIONS

CONCRETE RINGS

CATALOG NUMBER	DEPTH	KO SIZES	NO. ROWS KO'S	CU. IN.	STD. PKG.	UPC BAR CODE	RECOMMENDED MAX. SUPPORT LOAD	
							CEILING FAN (DYNAMIC) LBS.	FIXTURE (STATIC) LBS.
270RAC	2"	1/2" & 3/4"	Single	24.5	25	—	No	50
271	2-1/2"	1/2" & 3/4"	Single	30.8	25	—	No	50
272	3"	1/2" & 3/4"	Single	37.0	25	—	No	50
277	3"	3/4" & 1"	Single	37.0	25	—	No	50
273	3-1/2"	1/2" & 3/4"	Double	43.0	20	—	No	50
278	3-1/2"	3/4" & 1"	Single	43.0	20	—	No	50
274	4"	1/2" & 3/4"	Double	49.3	20	—	No	50
279	4"	3/4" & 1"	Double	49.3	20	—	No	50
275	5"	1/2" & 3/4"	Double	61.5	10	—	No	50
276	6"	1/2" & 3/4"	Double	74.0	10	—	No	50
284*	4"	1/2" & 3/4"	Double	49.3	6	—	35	75

*Ceiling Fan Support Box

HUNG CEILING BOX – 3-1/2" DEEP

CATALOG NUMBER	DESCRIPTION	CU. IN.	STD. PKG.	UPC BAR CODE
280	3/8" x 1/2" Long stud, 8-1/2", 8-3/4" KO's*	43.0	20	—
918	30" Long bars for hung ceiling box	—	40	—

*Order bars separately

CONCRETE RING – BACK PLATES/COVERS AND ADAPTER RING

CATALOG NUMBER	DESCRIPTION	KNOCKOUTS	O.D. DIAM.	STD. PKG.	UPC BAR CODE
890	—	3-1/2", 2-3/4"	4-1/2"	25	—
891	3/8" Stud	2-1/2", 2-3/4"	4-1/2"	25	—
892	Flat, blank	—	4-1/2"	25	—
893	Joins Oct. Ext. ring to concrete ring Includes two retained screws	—	4-1/2"	50	—

KNOCKOUT LOCATIONS

KNOCKOUT SIZE	A	B
1/2" and 3/4" KOs	1/2"	3/4"
3/4" and 1" KOs	3/4"	1"

HUBBELL RACO

MASONRY BOXES AND PARTITIONS

2-1/2" AND 3-1/2" DEEP

Applications

- Masonry boxes are designed to accommodate the mounting of switches or other devices in masonry walls
- Gangable masonry boxes offer the option of constructing a box to hold two or more devices
- 2-1/2" deep boxes are used in 4" block walls, 3-1/2" deep boxes are used in 6" or 8" block walls

Non-Gangable Product Features

- Rugged welded construction does not fall apart during construction
- Available from one to six gang configurations in both 2-1/2" and 3-1/2" depths
- Rectangular shape fits square cuts in block
- Large volume design allows for additional work room inside the box
- Standard 1/2" and 3/4" concentric knockouts
- Device ears are formed inside the box, preventing mortar from getting in the device holes
- Steel low voltage partition: 971 fits all 2-1/2" or 3-1/2" depths (non-gangable versions only)
- Standard wall plates cover the box

Gangable Product Features

- Rugged design does not fall apart during construction
- Gangable design allows installer to build unlimited number of gangs to hold multiple devices
- Rectangular shape fits square cuts in block
- Standard 1/2"- 3/4" TKO® knockouts
- Device ears are formed inside the box, preventing mortar from getting in the device holes
- Steel low voltage partitions: 675 fits 2-1/2" deep box, 676 fits 3-1/2" deep box
- Forward mounted grounding provision allows for easy installation of grounding pigtail
- Standard wall plates cover the box

Compliance

- UL – File E195978 (Cat. #971 not UL Listed)

690 691 692 695, 8695 696

697 971 675, 676 688, 689

ORDERING INFORMATION - DIMENSIONS

MASONRY BOXES – 2-1/2" DEEP – NONGANGABLE WITH CONDUIT KO'S

CATALOG NUMBER	NO. OF GANGS	WIDTH (B)	KNOCKOUTS ENDS	KNOCKOUTS BOTTOM	KNOCKOUTS SIDES	CU. IN.	STD. PKG.	UPC BAR CODE
690	1	1-31/32"	2 conc.	2 conc.	4 conc.	16.0	25	—
691	2	3-25/32"	4 conc.	4 conc.	4 conc.	31.8	25	—
692	3	5-19/32"	6 conc.	3 conc.	4 conc.	47.8	10	—
693	4	7-13/32"	8 conc.	4 conc.	4 conc.	63.5	10	—
694	5	9-7/32"	10 conc.	5 conc.	4 conc.	79.5	10	—
960	6	11-1/32"	12 conc.	6 conc.	4 conc.	95.3	1	—

MASONRY BOXES – 3-1/2" DEEP – NONGANGABLE WITH CONDUIT KO'S

CATALOG NUMBER	NO. OF GANGS	WIDTH (B)	KNOCKOUTS ENDS	KNOCKOUTS BOTTOM	KNOCKOUTS SIDES	CU. IN.	STD. PKG.	UPC BAR CODE
695	1	1-31/32"	4 conc.	2 conc.	4 conc.	22.5	25	—
8695	1	1-31/32"	4 conc.	2 conc.	4 conc.	22.5	25	||||||||
696	2	3-25/32"	8 conc.	4 conc.	4 conc.	45.0	25	||||||||
697	3	5-19/32"	12 conc.	3 conc.	4 conc.	67.3	10	||||||||
698	4	7-13/32"	16 conc.	4 conc.	4 conc.	89.8	10	—
699	5	9-7/32"	20 conc.	5 conc.	4 conc.	112.3	10	—
965	6	11-1/32"	24 conc.	6 conc.	4 conc.	134.8	1	—

MASONRY BOXES – GANGABLE WITH CONDUIT KO'S

CATALOG NUMBER	NO. OF GANGS	DEPTH	WIDTH (B)	KNOCKOUTS ENDS	KNOCKOUTS BOTTOM	KNOCKOUTS SIDES	CU. IN.	STD. PKG.	UPC BAR CODE
688	1	2-1/2"	1-15/16"	2 TKO®	2 TKO®	4 TKO®	15.5	20	||||||||
689	1	3-1/2"	1-15/16"	4 TKO®.	2 TKO®	4 TKO®	22.5	20	||||||||

LOW VOLTAGE PARTITION FOR MASONRY BOXES

CATALOG NUMBER	DESCRIPTION	STD. PKG.	UPC BAR CODE
FOR NON-GANGABLE MASONRY BOXES			
971	For 2-1/2" or 3-1/2" deep boxes	25	||||||||
FOR GANGABLE MASONRY BOXES			
675	For 2-1/2" deep boxes	20	||||||||
676	For 3-1/2" deep boxes	20	||||||||

4714, THE INSIDER® will secure nonmetallic sheathed cable in 1/2" KO (See pg. B87)

STEEL MASONRY BOXES 691, 696

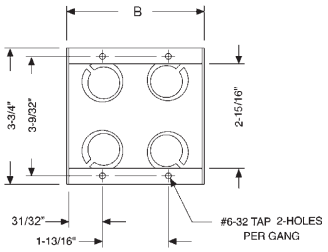

HUBBELL RACO

UNIVERSAL PROTECTOR PLATES

FOR USE WITH MUDRINGS - POWER

Applications

- Eliminates drywall compound, debris, paint, and drywall router bit from entering box or damaging conductors or devices
- Available in raised or flat versions — **Raised** covers all Decora™, duplex and switch wiring devices
  Flat close off mudring opening and protect wires from drywaller's router bit tools

Product Features

- Covers entire opening of mudring
- No hardware required for use - simply snaps on and off standard mudring
- Durable steel construction allows cover to be used multiple times
- Holes in cover allow for use of screws to prevent theft and add additional security (screws not included)
- Recessed tab allows cover to be easily removed using pliers, side cutters or flat screw driver

Reference Data

- Patent 7,102,079

701R 702R 701F 702F 700F 701FG

ORDERING INFORMATION - DIMENSIONS

RAISED 3/4" FOR DEVICE AND WIRE PROTECTION			
CATALOG NUMBER	DESCRIPTION	STD. PKG.	UPC BAR CODE
701R	To protect 1 device / for 1 device mudring*	24	—
702R	To protect 2 devices / for 2 device mudring*	24	—

*For protection of switch, GFCI, or duplex receptacles

FLAT FOR WIRE PROTECTION			
CATALOG NUMBER	DESCRIPTION	STD. PKG.	UPC BAR CODE
701F	To protect 1 device opening / for 1 device mudring	100	—
702F	To protect 2 device opening / for 2 device mudring	50	—
700F	To protect round opening for fixture mudring with 2-3/4" O.C. device ears	50	—

FLAT FOR WIRE PROTECTION (GANGABLE)			
CATALOG NUMBER	DESCRIPTION	STD. PKG.	UPC BAR CODE
701FG	Gangable for RACO 686, 687, and RACO non-gangable masonry boxes	100	—

CATALOG NUMBER	SINGLE DEVICE MUDRING	TWO DEVICE MUDRING	ROUND MUDRING	RACO® 686 & 687 & NONGANGABLE MASONRY BOXES	CADDY® MP1S™	CADDY® MP2S™
701R	X	—	—	—	—	—
702R	—	X	—	—	—	—
701F	X	—	—	—	S	—
702F	—	X	—	—	—	S
700F	—	—	X	—	—	—
701FG	—	—	—	X	—	—

S = Secondary Use

UNIVERSAL PROTECTOR PLATES

FOR LOW VOLTAGE MOUNTING RINGS/BRACKETS - DATA

Applications

- Eliminates drywall compound, debris, paint, and drywall router bit from entering box or damaging conductors or devices
- Available in raised or flat versions — **Raised** covers all Decora™, duplex and switch wiring devices
  Flat close off mudring opening and protect wires from drywaller's router bit tools

Product Features

- Covers entire opening of low voltage plate
- Features patented wire retrieval loop that allows data cable to be attached to cover — NO MORE LOST CABLES IN THE WALL!
- No hardware required for use - simply snaps on and off standard mudring
- Durable steel construction allows cover to be used multiple times
- Finger pull bail allows cover to be easily removed from ring
- Allows for multi access to work area for multi stage jobs
- Holes in cover allow for use of screws to prevent theft and add additional security (screws not included)

Reference Data

- Patent 7,102,079

701RD 702RD 701FD 702FD

ORDERING INFORMATION - DIMENSIONS

RAISED 3/4" FOR CONTROL DEVICE AND WIRE PROTECTION

CATALOG NUMBER	DESCRIPTION	STD. PKG.	UPC BAR CODE
701RD	To protect 1 device, for Caddy® Ring / low voltage mounting bracket MP1S™*	24	—
702RD	To protect 2 device, for Caddy® Ring / low voltage mounting bracket MP2S™*	24	—

*For protection of control devices, cable jacks, most Decora® style inserts and similar devices

FLAT FOR LOW VOLTAGE WIRE PROTECTION

CATALOG NUMBER	DESCRIPTION	STD. PKG.	UPC BAR CODE
701FD	To protect 1 device opening, for Caddy® Ring / low voltage mounting bracket MP1S™ *	50	—
702FD	To protect 2 device opening, for Caddy® Ring / low voltage mounting bracket MP2S™ *	25	—

*Can also be used on most steel single gang mudrings

CATALOG NUMBER	SINGLE DEVICE MUDRING	TWO DEVICE MUDRING	ROUND MUDRING	RACO® 686 & 687 & NONGANGABLE MASONRY BOXES	CADDY® MP1S™	CADDY® MP2S™
701FD	X	—	—	—	S	—
702FD	—	X	—	—	—	S
701RD	X	—	—	—	S	—
702RD	—	X	—	—	—	S

S = Secondary Use

HUBBELL RACO

BOX SUPPORT PRODUCTS

BRACES AND EXTENDERS

Applications (9003 - 9006, 9012 -9015)

- For metal or wood stud box postitioning

Features

- Available for 1-1/2" or 2-1/8" deep boxes
- Locator dimples on face of bar allows for exact positioning of single or multiple boxes
- Dimple feature provides quick start of screws, and reinforcement to prevent box mounting screws from stripping out when box is mounted
- Design of adjustable brace allows ground screw to clear when box is mounted
- Boxes attach easily with self-tapping screws

Compliances

9003 - 9006

9012 - 9015

ORDERING INFORMATION - DIMENSIONS

NON-ADJUSTABLE BOX MOUNTING BRACE FOR 4" AND 4-11/16" SQUARE BOX			
CATALOG NUMBER	DESCRIPTION	STD. PKG.	UPC BAR CODE
9003	For 16" stud spacing, 1-1/2" deep box	50	—
9004	For 16" stud spacing, 2-1/8" deep box	50	—
9005	For 24" stud spacing, 1-1/2" deep box	50	—
9006	For 24" stud spacing, 2-1/8" deep box	50	—

ADJUSTABLE BOX MOUNTING BRACE FOR 4" AND 4-11/16" SQUARE BOX			
CATALOG NUMBER	DESCRIPTION	STD. PKG.	UPC BAR CODE
9012	Adjusts from 10-3/8" to 18", 1-1/2" deep box	50	—
9013	Adjusts from 10-3/8" to 18", 2-1/8" deep box	50	—
9014	Adjusts from 15" to 26", 1-1/2" deep box	50	—
9015	Adjusts from 15" to 26", 2-1/8" deep box	50	—

Applications (9016)

- Extension for leg to accommodate 6" deep studs

Features

- To be used with the following RACO® SKU's: 9001, 9002, 9009, 9010, 9011
- Simple snap-on design

Compliances

9016

ORDERING INFORMATION - DIMENSIONS

LEG EXTENDER			
CATALOG NUMBER	DESCRIPTION	STD. PKG.	UPC BAR CODE
9016	To be used for 6" stud size	100	—

BRACKETS

Applications (9007, 9018)

- Supports electrical boxes when mounted to a stud

Features

- Dual-point mounting ensures a secure, stable installation
- When properly mounted, the leg cannot be bent by other trades during the construction process
- Mounts 4” or 4-11/16” sq. box to 2-1/2”, 3-1/2”, 4” and 6” studs
- Box can be mounted on bracket without raised cover to save time by providing maximum work area in box
- When mounted, drywall ring is brought to within 1/16” of drywall every time and will not bulge or break out drywall

Compliance

- UL, CSA

9007

9018

ORDERING INFORMATION - DIMENSIONS

TWO-POINT BOX MOUNTING BRACKETS			
CATALOG NUMBER	DESCRIPTION	STD. PKG.	UPC BAR CODE
9007	Right side stud mount	100	—
9018	Left or right side stud mount	100	—

Applications (9001, 9002)

- Positions electrical boxes, plaster rings, and low voltage devices between studs

Features

- Fold-back stabilizer leg prevents bracket from being pushed back in wall cavity during drywall installation
- Designed for 2-1/2” or 3-1/2” studs. Add RACO® 9016 to leg to accommodate 6” depth studs
- Mounts 4” or 4-11/16” sq. boxes
- Box can be mounted on ring without raised cover to save time by providing maximum work area inside box
- When mounted, raised cover is brought to within 1/16” of drywall every time and will not bulge or break out drywall

Compliances

- UL, CSA

9001

9002

ORDERING INFORMATION - DIMENSIONS

FIXED POSITION BOX MOUNTING BRACKETS			
CATALOG NUMBER	DESCRIPTION	STD. PKG.	UPC BAR CODE
9001	3 - box, for 16” on center studs	50	—
9002	4 - box, for 24” on center studs	50	—

BOX SUPPORT PRODUCTS

BRACKETS AND BOX SUPPORTS

Applications (9011)

- Supports 3" x 2" switch boxes when mounted to stud

Features

- Accommodates all 3" x 2" switch boxes with one or two screw plaster ears
- Bracket can be ganged on same side of stud allowing for increased flexibility
- Bracket can be mounted on both sides of stud for double mounting
- Will not bulge or break out drywall when mounted

Compliances

- UL, CSA

Applications (9008, 9017)

- Mounts standard low voltage wall plates, old work (existing walls) or new work (wood or metal studs)

Features

- For use on low voltage Class 2 circuits only where electrical boxes are not required
- Can be used to mount telephone jacks, computer outlets, security/sound systems, television antennas, etc.
- Fast, precise mounting of low voltage wall plates to walls or studs

Compliances

- UL, CSA

Applications (9009, 9010)

- Supports electrical boxes from floor or concrete forms

Features

- Fold-back stabilizer prevents bracket from being pushed back in wall cavity during drywall installation
- Designed for mounting sq. boxes 12" or 18" above floor. Mounts to metal or wood plate
- Mounts 4" or 4-11/16" sq. boxes
- Box can be mounted on support without drywall ring to save time by providing maximum working area in box
- When mounted, raised cover is brought to within 1/16" of drywall every time. Will not bulge or break out drywall

Compliances

- UL, CSA

9011

9008 - 9017

ORDERING INFORMATION - DIMENSIONS

BOX MOUNTING BRACKET FOR 3" X 2" SWITCH BOXES			
CATALOG NUMBER	DESCRIPTION	STD. PKG.	UPC BAR CODE
9011	For 2-1/2" or 3-1/2" metal studs	100	—

LOW VOLTAGE MOUNTING BRACKET			
CATALOG NUMBER	DESCRIPTION	STD. PKG.	UPC BAR CODE
9008	New or old work, single-gang	100	—
9017	New or old work, single-gang	20 bags*	

*2 brackets per poly-bag

9009

9010

ORDERING INFORMATION - DIMENSIONS

FLOOR MOUNTED BOX SUPPORT			
CATALOG NUMBER	DESCRIPTION	STD. PKG.	UPC BAR CODE
9009	12" tall bracket	25	—
9010	18" tall bracket	25	—

HUBBELL RACO

Application (920, 922)

- Adjustable bar hanger allows box to be placed between ceiling joists or wall studs quickly and easily

Product Features

- Both RACO® 920 and 922 bar fixture hangers allow box to be located anywhere along length of bar
- RACO® 920 includes 3/8" trade size stud to accommodate fixture stem
- 922 Clip installs in 1/2" knockout located in bottom (back) of box
- RACO® box must be ordered separately

Box Installation

- Bar hangers attach to octagon or square boxes through center 1/2" knockouts
- Remove the knockout
- Remove the screw and fixture stud (or clip) from bar hanger
- Place the stud inside the box and replace the screw
- When box is located accurately between the joists, tighten the screw securely

Compliance

- UL – File E195973

BOX-LOC® Application (980)

- Allows any box to be attached to either side of a metal stud quickly and easily

BOX-LOC® Product Features

- Patented spring steel design
- Installs in seconds without tools
- Mounts on either side of stud
- Repositions easily
- Bracket may be added to any RACO® 4" or 4-11/16" square steel box - simply tap the bracket with a hammer and the barbed hooks hold it in place
- BOX-LOC® is a snap to install. Place the bracket on the open side of the stud first. Slots in the bracket engage the lip of the stud and actually crimp it as you press the bracket on the stud. Barbed hooks dig into the flat side of the stud, locking it in place

Far Side Box Support Application (978)

- Prevents installed box from "floating" in wall cavity

Far Side Box Support Features

- Snaps into hole in back of box
- Easy to cut to fit depth of cavity

920

922

BOX-LOC®
980

978

ORDERING INFORMATION - DIMENSIONS

ADJUSTABLE BAR HANGERS

CATALOG NUMBER	DESCRIPTION	STD. PKG.	UPC BAR CODE	RECOMMENDED MAX. SUPPORT LOAD	
				CEILING FAN (DYNAMIC) LBS.	FIXTURE (STATIC) LBS.
920*	3/8" Stud, adj. 14-1/4" to 22-1/2"	50		No	50
922*	Clip, adj. 14-1/4" to 22-1/2"	50		No	50

*UL Rated at 16" span on center

BOX-LOC® METAL STUD CLIP

CATALOG NUMBER	DESCRIPTION	STD. PKG.	UPC BAR CODE
980	Spring-steel bracket	50	|||||||

FAR SIDE BOX SUPPORT

CATALOG NUMBER	DESCRIPTION	STD. PKG.	UPC BAR CODE
978	1-7/8" Rigid, plastic support	50	—

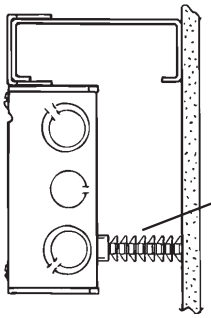

"Old Work Saddle" Application (970RAC)

- The "Old Work Saddle" #970 is designed to be used with 2-1/2" deep switch boxes that have plaster ears

"Old Work Saddle" Product Feature

- #970RAC installs into the 1/2" bottom conduit knockout

GRIP-LOK™ Application (977, 8977, 8977-5)

- The GRIP-LOK™ support is designed to be used with any deep switch box that has plaster ears

GRIP-LOK™ Product Feature

- Simply slip GRIP-LOK™ between box and wall, then bend tabs into the box

Add-A-Depth Applications (976)

- Add-A-Depth ring or "goof-ring" is designed to act as a barrier between combustible wall surfaces and the wiring system
- For single and two-gang device boxes
- There is no UL standard for this product
- Subject to acceptance by an electric inspector

The NEC Code States: 314.20 in Wall or Ceiling

- In walls or ceilings of concrete, tile, or other non-combustible material, boxes shall be installed so that the front edge of the box will not set back of the finished surface more than 1/4 inch (6.35 mm). In walls and ceilings constructed of wood or other combustible material, boxes shall be flush with the finished surface or project there from

Nailing Spur Applications (2709, 2710)

- Protects nonmetallic sheathed cable or raceway type wires running through wood members from accidental nail, screw or drill penetration
- No nails required

Compliance

- UL – File E195973, E195968 (not 970RAC)

Applications (969)

- Old work box support clips convert standard switch box to old work type

Product Feature

- Old work switch box clips for use with 1/2" thick standard drywall
- One pair per box

969

970RAC

GRIP-LOK™ 977, 8977, 8977-5

976

2709, 2710, 2709-9

ORDERING INFORMATION - DIMENSIONS

SWITCH BOX SUPPORT "OLD WORK SADDLE"

CATALOG NUMBER	DESCRIPTION	STD. PKG.	UPC BAR CODE
970RAC	Mounts switch boxes with plaster ears in hollow walls or ceilings	10	

GRIP-LOK™ "OLD WORK" SWITCH BOX SUPPORT

CATALOG NUMBER	DESCRIPTION	STD. PKG.	UPC BAR CODE
977	Supplied as a pair. Use pair to mount switch box with plaster ears in hollow wall, 1-7/8" long legs	100 pairs	—
8977	Supplied as a pair. Use pair to mount switch box with plaster ears in hollow wall, 1-7/8" long legs	50 pairs	
8977-5	Supplied as a pair. Use pair to mount switch box with plaster ears in hollow wall, 1-7/8" long legs	100 pairs*	

*4 Bundles of 25

SWITCH BOX ACCESSORIES

CATALOG NUMBER	DESCRIPTION	FOR RACO SWITCH BOXES	STD. PKG.	UPC BAR CODE
961	Plaster Ears - Open Style w/screws	410, 420, 440, 445, 500, 503, 506, 508, 526, 545, 560, 565, 567, 570RAC, 590, 600, 601	100	
962	Plaster Ears - Clipped Style w/screws	150, 400, 591	100	
963	Plaster Ears - 1 Screw Style w/screws	471, 487, 517, 518, 519, 523	100	
964	Old Work Griptite Clip w/screws	523	100	
966	Old Work Tigergrip Clip w/screws	487, 506, 517	100	

OLD WORK SWITCH BOX CLIPS

CATALOG NUMBER	DESCRIPTION	STD. PKG.	UPC BAR CODE
969	Old work clips for switch box	50	

ADD-A-DEPTH RING EXTENDS SWITCH BOX SET TOO DEEP IN WALL

CATALOG NUMBER	DESCRIPTION	STD. PKG.	UPC BAR CODE
976	Adjustment range 1/4"-1", Two 1-1/8" screws included	25	

CABLE PROTECTOR

CATALOG NUMBER	DESCRIPTION	STD. PKG.	UPC BAR CODE
2709	Nailing spurs, 2-9/16" H. x 1-1/2" W. x 1/16" TH. 1/2" Spike	100	
2710	Nailing spurs, 2-9/16" H. x 1-1/2" W. x 1/16" TH. 1/2" Spike	200	—
2709-9	Nailing spurs, 2-9/16" H. x 1-1/2" W. x 1/16" TH. 1/2" Spike	100	—

ACCESSORIES FOR STEEL BOXES

Grounding Applications

- Grounding accessories provide a safe electrical path to ground to help prevent shock
- Grounding screws thread into the box and provide a means of fastening the ground conductor
- Ground wires fasten to the box and are then connected to wiring system or wiring device
- RACO® 6" and 8" ground pigtails feature 4-way (slotted, phillips, hex-head) combo 10-32 captive screw
- Ground clips provide a quick method of fastening a ground conductor to the edge of a steel outlet box
- Ground clips are designed for use with solid No. 14, 12, and 10 gauge copper conductor or No. 12 and 10 gauge aluminum conductor
- Only one solid ground wire to be installed per ground clip

Compliance

- UL – File E195975 (975, 8975-1)

982, 994 #14 WIRE
996, 8996-1, 8983-1, 983 #12 WIRE

984, 997 #14 WIRE

992 #14 WIRE
993 #12 WIRE

998, 8998-1

973, 8973-1

975, 8975-1

4714 THE INSIDER®

ORDERING INFORMATION - DIMENSIONS

GROUNDING PIGTAILS

CATALOG NUMBER WIRE LENGTH 6"	8"	DESCRIPTION	STD. PKG.	UPC BAR CODE
982	994	#14 Solid insulated copper wire, captive 4-way combo head green dye finish ground screw one end (25 pc. bundles)	1000	—
983	996	#12 Solid insulated copper wire, captive 4-way combo head green dye finish ground screw one end (25 pc. bundles)	1000	—
8983-1	8996-1	#12 Solid insulated copper wire, captive 4-way combo head green dye finish ground screw one end, poly bag (10 pcs per poly bag)	40 bags*	
984	997	#14 Solid bare copper wire, captive 4-way combo head green dye finish ground screw one end (25 pc. bundles)	1000	—
—	992	#14 Stranded insulated copper wire, captive 4-way combo head green dye finish ground screw one end, spade terminal one end (100 pc. bundles)	500	—
—	993	#12 Stranded insulated copper wire, captive 4-way combo head green dye finish ground screw one end, spade terminal one end (100 pc. bundles)	500	—

GROUNDING SCREWS AND CLIPS

CATALOG NUMBER	DESCRIPTION	STD. PKG.	UPC BAR CODE
998	4-Way combo head green dye finish 3/8" ground screw for 10-32 tapped hole, clam shell package (100 pcs per clam shell	1000	
8998-1	4-Way combo head green dye finish 3/8"ground screw for 10-32 tapped hole, poly bag (10 pcs. per bag)	50 bags*	
973	Slotted head green dye finish 3/8"ground screw for 10-32 tapped hole, clam shell package (100 pcs per clam shell)	1000	
8973-1	Slotted head green dye finish 3/8"ground screw for 10-32 tapped hole, poly bag (10 pcs. per bag)	50 bags*	
975	Green dye finish ground clip for #14-#10 AWG copper, clam shell package (100 pcs per clam shell)	1000	
8975-1	Green dye finish ground clip for #14-#10 AWG copper, poly bag (10 pcs. per bag)	50 bags*	

*Order standard package bag quantities only, not per piece

4714, THE INSIDER® will secure nonmetallic sheathed cable in 1/2" KO (See pg. B87)

RACO® Nonmetallic Cable Boxes

MOST OFTEN REQUESTED ARTICLES OF THE 2008 NATIONAL ELECTRICAL CODE®	HOW RACO® PRODUCTS HELP COMPLETE THE INSTALLATION
314.27 (A) Boxes at Lighting Fixture Outlets. Boxes used at lighting fixture outlets shall be designed for the purpose.	Our octagon boxes are designed for direct mounting of light fixtures. Device boxes are designed for the mounting, (by #6-32 screws), of devices such as snap-switches and receptacles. They are not suitable for support other than for very lightweight devices, such as a smoke alarm unit. (See Article 314.27 (A)) or wall fixtures 6 lbs. or less [See 314.27 (A) exception].
314.16 (A) Space for Conductors. Canopies and outlet boxes taken together shall provide adequate space so that fixture conductors and their connecting devices can be properly installed.	When calculating the minimum cubic inch requirements for an outlet box, the canopy may be included in the calculation. However, the canopy of the fixture/fan needs to be marked with the cubic inch capacity. The volume of an unmarked canopy may be used at the discretion of the local authority having jurisdiction.
314.27 (D) Boxes at Fan Outlets. Outlet boxes shall not be used as the sole support for ceiling (paddle) fans. Exception: Boxes listed for the application shall be permitted as the sole means of support.	At any ceiling outlet that is intended to have a ceiling (paddle) fan installed, a UL Listed outlet box rated for ceiling fan support must be used. RACO offers a complete line of products designed for various applications and mounting needs.
314.27 (C) Floor Boxes. Boxes listed specifically for this application shall be used for receptacles located in the floor. Exception: Boxes located in elevated floors of show windows and similar locations where the authority having jurisdiction judges them to be free from physical damage, moisture, and dirt.	Only boxes that are UL Listed for the application may be fastened into the floor. RACO® floor boxes are in Section C in this catalog.
410.36 (A) Means of Support — Outlet Boxes. Where the outlet box or fitting will provide adequate support, a fixture shall be attached thereto or be supported as required by Section 314.27(B) for boxes. A fixture that weighs more than 50 pounds (22.7 kg) shall be supported independently of the outlet box.	All outlet boxes that are intended to be used with fixtures are tested in accordance with UL Standard 514-A for steel boxes, 514-C for plastic boxes. The test does provide an ample margin for safety.
314.27 (D) Support of Ceiling Fans. **(a) Ceiling Fans 35 lbs. or Less.** Listed ceiling fans that do not exceed 35 pounds in weight, with or without accessories, shall be permitted to be supported by outlet boxes identified for such use and supported in accordance with Sections 370-23 and 370-27. **(b) Ceiling Fans Exceeding 35 lbs.** Listed ceiling fans exceeding 35 pounds in weight, with or without accessories, shall be supported independently of the outlet box. See Section 370-23.	If the outlet box is UL Listed for ceiling fan support, the maximum fan weight that can be supported is 35 pounds unless otherwise marked. The RACO® ceiling fan box (7120) is UL Listed for 70 lbs. RACO® ceiling fan outlet boxes use hardened screws for support of the fan. Captive star lock-washers prevent the screws from loosening, providing a safe and secure installation.
300.133 (A)(1)(C) Installation of Communications Wires, Cables, and Equipment — Electric Light or Power Circuits. Communications conductors shall not be placed in any raceway, compartment, outlet box, junction box, or similar fitting with conductors of electric light or power circuits or Class 1 circuits.	When power and voice/data are brought to one enclosure, a means of dividing the wiring is required. RACO® has a variety of metallic and nonmetallic low voltage partitions.
406/11 Tamper-Resistant Receptacles in dwelling units.	This prevents shocks to small children that like to insert keys, paper clips, etc. into the receptacle slots.

NONMETALLIC CABLE BOXES

Applications

- RACO® nonmetallic cable boxes are used in branch circuit wiring to splice wires
- Accommodate wiring devices such as switches and receptacles
- Provide excellent protection for wiring system or devices

Product Features

- RACO® nonmetallic cable boxes provide the installer with a cost alternative that is lightweight and easy to install
- Single-gang boxes have knockouts that break out quickly and cleanly for faster installation
- Positioning tabs for fast accurate mounting on studs or joists
- Oversized nail support that resists hammer impact and prevents box deformation

Standard Material

- Made of heavy-duty PVC (Polyvinyl chloride) compound

Reference Data

- Mounting holes U.S. Patent 4,580,689; Canada Patent 1,237,515
- Hex device holes U.S. Patent 4,666,055; Canada Patent 1,260,599

Compliances

- UL – Standard 514-C, File E104681 and R9320
- Boxes are listed for their Electrical Applications (Electrical Codes), UL Green Book
- Boxes are listed for mechanical properties, including the 2-hour Fire Rating, (building codes) UL Orange Book
- Federal Manufacturer's number 28488

7302RAC, 7820RAC

ORDERING INFORMATION - DIMENSIONS

SINGLE-GANG WITH CAPTIVE NAILS FOR NONMETALLIC SHEATHED CABLE					
CATALOG NUMBER	DESCRIPTION/ SETBACK	CABLE KNOCKOUTS	CU. IN. CAP.	STD. PKG.	UPC BAR CODE
7302RAC	Nails, 1/2" setback	4	18.0	100	|||||||
7820RAC	Nails, 1/2" setback	4	20.0	100	|||||||

DIMENSIONS	
CATALOG NUMBER	A (DEPTH)
7302RAC	2-3/4"
7820RAC	3-3/16"

NONMETALLIC BOXES

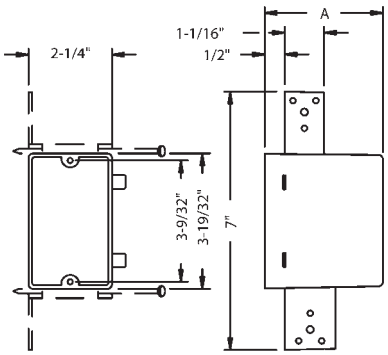

NONMETALLIC CABLE BOXES

MULTIGANG

Applications
- RACO® nonmetallic cable boxes are used in branch circuit wiring to splice wires
- Accommodate wiring devices such as switches and receptacles
- Provide excellent protection for wiring system or devices

Product Features
- RACO® nonmetallic cable boxes provide the installer with a cost alternative that is lightweight and easy to install
- Self-clamping wire entry clamps
- Positioning tabs for fast accurate mounting on studs or joists
- Oversized nail support that resists hammer impact

Standard Material
- Made of heavy-duty PVC (Polyvinyl chloride) compound

Reference Data
- Cable clamp U.S. Patent 4,605,816; Canada Patent 1,233,900
- Mounting holes U.S. Patent 4,580,689; Canada Patent 1,237,515
- Hex device holes U.S. Patent 4,666,055; Canada Patent 1,260,599
- Four-gang box support U.S. Patent 5,065,968

Compliances
- UL – Standard 514-C,
  – File E104681 and R9320
- Boxes are listed for their Electrical Applications (Electrical Codes), UL Green Book
- Boxes are listed for mechanical properties, including the 2-hour Fire Rating (except 7645RAC), (building codes) UL Orange Book
- Federal Manufacturer's number 28488

7835RAC

7645RAC

7846RAC

ORDERING INFORMATION - DIMENSIONS

TWO-GANG WITH CAPTIVE NAILS FOR WOOD STUDS FOR NONMETALLIC SHEATHED CABLE

CATALOG NUMBER	DESCRIPTION	CABLE CLAMPS	CU. IN. CAP.	STD. PKG.	UPC BAR CODE
7835RAC	Nails	8	32.0	15	

MULTI-GANG WITH CAPTIVE NAILS FOR METAL OR WOOD STUDS FOR NONMETALLIC SHEATHED CABLE

CATALOG NUMBER	DESCRIPTION	CABLE CLAMPS	CU. IN. CAP.	STD. PKG.	UPC BAR CODE
7645RAC	Four-gang, nails, 1/2" setback bracket support	12	55.0	25	
7846RAC	Three-gang, nails, 1/2" setback	12	44.0	8	

DIMENSIONS

CATALOG NUMBER	GANG	WIDTH	DEPTH
7835RAC	2	4”	2-29/32”
7846RAC	3	5-7/8”	2-3/4”
7645RAC	4	7-5/8”	2-5/8”

MULTI-GANG CABLE BOX

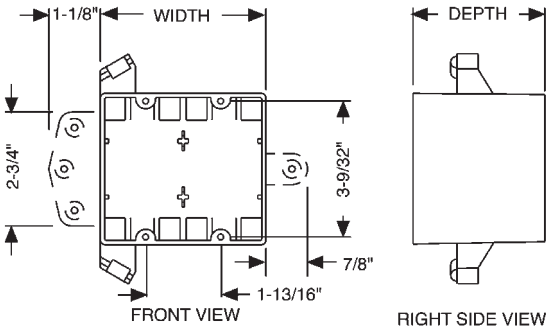

NONMETALLIC CABLE BOXES

Applications
- RACO® nonmetallic cable boxes are used in branch circuit wiring to splice wires
- Accommodate wiring devices such as switches and receptacles
- Provide excellent protection for wiring system or devices

Product Features
- RACO® nonmetallic cable boxes provide the installer with a cost alternative that is lightweight and easy to install
- Single-gang boxes have knockouts that break out quickly and cleanly for faster installation
- Positioning tabs for fast accurate mounting on studs or joists

Standard Material
- Made of heavy-duty PVC (Polyvinyl chloride) compound

Reference Data
- Mounting holes U.S. Patent 4,580,689; Canada Patent 1,237,515
- Hex device holes U.S. Patent 4,666,055; Canada Patent 1,260,599

Compliances
- UL – Standard 514-C, File E104681 and R9320
- Boxes are listed for their Electrical Applications (Electrical Codes), UL Green Book
- Boxes are listed for mechanical properties, including the 2-hour Fire Rating, (building codes) UL Orange Book
- Federal Manufacturer's number 28488

7308RAC

7717RAC

7318RAC

7881, 7883

ORDERING INFORMATION - DIMENSIONS

SINGLE-GANG WITH BRACKETS FOR METAL OR WOOD STUDS FOR NONMETALLIC SHEATHED CABLE

CATALOG NUMBER	DESCRIPTION	CABLE KNOCOUTS	CU. IN. CAP.	STD. PKG.	UPC BAR CODE
7308RAC	Bracketed, shallow, 3/8" setback	2	8.0	25	||||||||
7318RAC	Flanged, shallow	2	8.0	25	||||||||
7717RAC	Face mount, 1/2" setback	4	20.0	100	||||||||
7881	Side mount, 5/8" setback	4	18.0	50	||||||||
7883	Side mount, 5/8" setback	4	20.3	50	||||||||

DIMENSIONS

CATALOG NUMBER	A	B	C	D
7308RAC	1-1/4"	2-3/8"	3-1/2"	3/8"
7318RAC	1-1/4"	2-3/8"	3-1/2"	—
7717RAC	2-27/32"	2-1/4"	3-19/32"	1/2"
7881	2-27/32"	2-1/4"	3-19/32"	5/8"
7883	3-3/16"	2-1/4"	3-19/32"	5/8"

NONMETALLIC BOXES

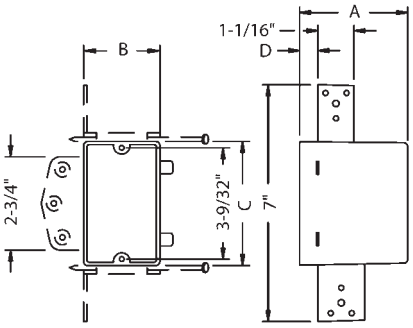

NONMETALLIC CABLE BOXES

Applications
- RACO® nonmetallic cable boxes are used in branch circuit wiring to splice wires
- Accommodate wiring devices such as switches and receptacles
- Provide excellent protection for wiring system or devices

Product Features
- RACO® nonmetallic cable boxes provide the installer with a cost alternative that is lightweight and easy to install
- Self-clamping wire entry clamps
- Extra long, metal swing arms ensure secure installation
- RACO® 7122RAC and 7922RAC features wrap-around metal clamp to secure box to sheetrock

Standard Material
- Made of heavy-duty PVC (Polyvinyl chloride) compound. 7122RAC and 7922RAC is polycarbonate

Reference Data
- Old work support U.S. Patent 4,183,486
- Cable clamp U.S. Patent 4,874,905
- Mounting holes U.S. Patent 4,580,689; Canada Patent 1,237,515
- Hex device holes U.S. Patent 4,666,055; Canada Patent 1,260,599

Compliances
- UL – Standard 514-C, File E104681 and R9320
- Boxes are listed for their Electrical Applications (Electrical Codes), UL Green Book
- Boxes are listed for mechanical properties, including the 2-hour Fire Rating, (building codes) UL Orange Book
- Federal Manufacturer's number 28488

7887RAC

7488RAC

7122RAC

7922RAC

ORDERING INFORMATION - DIMENSIONS

OLD WORK BOXES FOR NONMETALLIC SHEATHED CABLE

CATALOG NUMBER	DESCRIPTION	CABLE CLAMPS	CU. IN. CAP.	STD. PKG.	MAX.RECOMMENDED SUPPORT LOADS FIXTURE (STATIC) LBS.	UPC BAR CODE
7887RAC	Single-gang, old work, flush mount	4	14.0	50	No	
7488RAC	Two-gang, old work, flush mount	6	25.0	30	No	
7122RAC	3-1/2" Round, old work, flush mount	4	18.0	100	5	
7922RAC	3-1/2" Round, old work, flush mount w/grnd. plate	4	18.0	100	No	

DIMENSIONS

CATALOG NUMBER	GANG	A	B	C
7887RAC	1	2-29/32"	3-1/8"	2-1/4"
7488RAC	2	2-3/4"	4"	3"
7122RAC	—	2-11/16"	—	—
7922RAC	—	2-11/16"	—	—

CAT. NOs. 7887RAC, 7488RAC

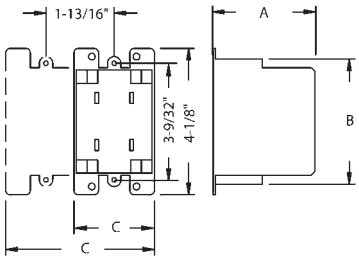

CAT. NOs. 7122RAC, 7922RAC

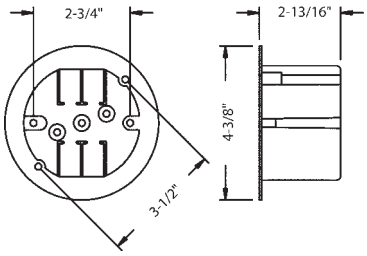

HUBBELL RACO

Applications
- RACO® nonmetallic cable boxes are used in branch circuit wiring to splice wires
- Accommodate wiring devices such as switches and receptacles
- Provide excellent protection for wiring systems or devices

Product Features
- RACO® nonmetallic cable boxes provide the installer with a cost alternative that is lightweight and easy to install
- Self-gripping wire entry clamps
- Oversized nail support that resists hammer impact and prevents box deformation
- The RACO® 980 BOX-LOC® for metal studs can be installed to either the 7220RAC or 7232RAC quickly and easily. With just a push, it simply snaps into the grooves on the side of box. The 978 far-side box support than can be added to complete a rigid and secure installation

Standard Material
- Made of heavy-duty PVC (Polyvinyl chloride) compound

Reference Data
- Cable clamp U.S. Patent 4,874,905 & 4,605,816; Canada Patent 1,233,900
- Mounting holes U.S. Patent 4,580,689; Canada Patent 1,237,515
- Hex device holes U.S. Patent 4,666,055; Canada Patent 1,260,599

Compliances
- UL – Standard 514-C, File E104681 and R9320
- Boxes are listed for their Electrical Applications (Electrical Codes), UL Green Book
- Boxes are listed for mechanical properties, including the 2-hour Fire Rating, (building codes) UL Orange Book
- Federal Manufacturer's number 28488

7220RAC

7232RAC

978

980 BOX-LOC®

ORDERING INFORMATION - DIMENSIONS

4" SQUARE WITH CAPTIVE NAILS FOR METAL* OR WOOD STUDS FOR NONMETALLIC SHEATHED CABLE

CATALOG NUMBER	DESCRIPTION	CABLE CLAMPS	CU. IN. CAP.	STD. PKG.	UPC BAR CODE
7220RAC	Nails	8	18.0	8	|||||||
7232RAC	Nails	10	32.0	8	|||||||

ACCESSORIES

CATALOG NUMBER	DESCRIPTION	STD. PKG.	UPC BAR CODE
978	Far-side box support	50	|||||||
980	BOX-LOC® metal stud clip	50	|||||||

DIMENSIONS

CATALOG NUMBER	A (DEPTH)
7220RAC	1-5/8"
7232RAC	2-5/8"

NONMETALLIC BOXES

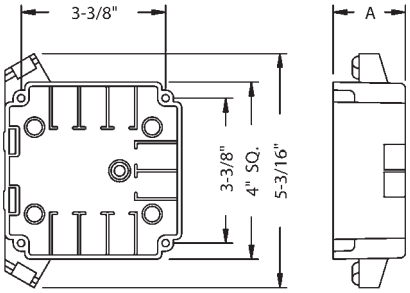

NONMETALLIC CABLE BOXES

Applications

- RACO® nonmetallic cable boxes are used in branch circuit wiring to splice wires
- Provide excellent protection for wiring systems or devices
- For use wherever lighting fixture canopies are to be installed
- Ceiling boxes on this page are not designed for ceiling fan support

Product Features

- RACO® nonmetallic cable boxes provide the installer with a cost alternative that is lightweight and easy to install
- Self-gripping wire entry clamps
- Round fixture boxes offer an optional front-mounted grounding screw
- Oversized nail support that resists hammer impact and prevents box deformation

Standard Material

- Made of heavy-duty engineered compound. Base material is polycarbonate

Reference Data

- Cable clamp U.S. Patent 4,874,905 & 4,605,816; Canada Patent 1,233,900
- Mounting holes U.S. Patent 4,580,689; Canada Patent 1,237,515
- Hex device holes U.S. Patent 4,666,055; Canada Patent 1,260,599

Compliances

- UL – Standard 514-C, File E104681 and R9320
- Boxes are listed for their Electrical Applications (Electrical Codes), UL Green Book
- Boxes are listed for mechanical properties, including the 2-hour Fire Rating, (building codes) UL Orange Book
- Federal Manufacturer's number 28488

7919RAC GRD. PLATE
7119RAC W/O PLATE

7823RAC GRD. PLATE
7824RAC W/O PLATE

ORDERING INFORMATION - DIMENSIONS

3-1/2" ROUND CEILING WITH CAPTIVE NAILS FOR NONMETALLIC SHEATHED CABLE

CATALOG NUMBER	DESCRIPTION SETBACK	CABLE CLAMPS	CU. IN. CAP.	STD. PKG.	UPC BAR CODE	RECOMMENDED MAX. SUPPORT LOADS	
						CEILING FAN (DYNAMIC) LBS.	FIXTURE (STATIC) LBS.
7119RAC	Nails, 1/2" setback	4	18.0	75	IIIIIIII	No	50
7919RAC	Nails, grd. plate 1/2" setback	6	18.0	75	IIIIIIII	No	50

4" ROUND CEILING WITH CAPTIVE NAILS FOR NONMETALLIC SHEATHED CABLE

CATALOG NUMBER	DESCRIPTION SETBACK	CABLE CLAMPS	CU. IN. CAP.	STD. PKG.	UPC BAR CODE	RECOMMENDED MAX. SUPPORT LOADS	
						CEILING FAN (DYNAMIC) LBS.	FIXTURE (STATIC) LBS.
7824RAC	Nails, 3/8" setback	4	20.0	75	IIIIIIII	No	50
7823RAC	Nails, grd. plate 3/8" setback	4	20.0	75	IIIIIIII	No	50

CAT. NOs. 7119RAC, 7919RAC

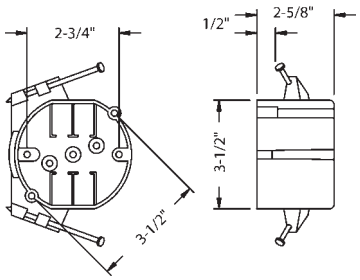

CAT. NOs. 7823RAC, 7824RAC

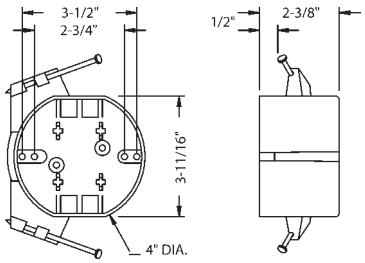

NONMETALLIC CEILING CABLE BOXES

Applications
- RACO® nonmetallic cable boxes are used in branch circuit wiring to splice wires
- Provide excellent protection for wiring systems or devices
- RACO® 7907, 7307, 7825, 7826RAC are not designed for ceiling fan support

Product Features
- RACO® nonmetallic cable boxes provide the installer with a cost alternative that is lightweight and easy to install
- Self-gripping wire entry clamps
- Round fixture boxes offer an optional front-mounted grounding screw
- For use wherever fans (Cat. #7120, 7120-1, 7120VB only) or lighting fixture canopies are to be installed

Standard Material
- Made of heavy-duty engineered compound. Base material is polycarbonate

Reference Data
- Cable clamp U.S. Patent 4,874,905 & 4,605,816; Canada Patent 1,233,900
- Mounting holes U.S. Patent 4,580,689; Canada Patent 1,237,515
- Hex device holes U.S. Patent 4,666,055; Canada Patent 1,260,599
- Cat. #7120 U.S. Patent 5,234,119; Mexico Patent 179,825

Compliances
- UL – Standard 514-C, File E104681 and R9320
- All versions of RACO® 7120 are UL approved for nonmetallic wiring systems
- Boxes are listed for their Electrical Applications (Electrical Codes), UL Green Book
- Boxes are listed for mechanical properties, including the 2-hour Fire Rating, (building codes) UL Orange Book
- Federal Manufacturer's number 28488

7907 GRD. PLATE
7307 W/O PLATE

7825 GRD. PLATE
7826RAC W/O PLATE

SADDLE BOX™
7120, 7120-1

7120VB

ORDERING INFORMATION - DIMENSIONS

3-1/2" ROUND CEILING SET-UP FOR SPANNING FROM JOIST TO JOIST FOR NONMETALLIC SHEATHED CABLE

CATALOG NUMBER	DESCRIPTION	CABLE CLAMPS	CU. IN. CAP.	STD. PKG.	UPC BAR CODE	RECOMMENDED MAX. SUPPORT LOADS	
						CEILING FAN (DYNAMIC) LBS.	FIXTURE (STATIC) LBS.
7307*	Adj. 14-3/4" - 22-1/2"	4	18.0	25		No	50
7907*	Adj. 14-3/4" - 22-1/2" Ground plate	4	18.0	25		No	50

* UL Rated at 16" on center

4" ROUND CEILING SET-UP FOR SPANNING FROM JOIST TO JOIST FOR NONMETALLIC SHEATHED CABLE

CATALOG NUMBER	DESCRIPTION	CABLE CLAMPS	CU. IN. CAP.	STD. PKG.	UPC BAR CODE	RECOMMENDED MAX. SUPPORT LOADS	
						CEILING FAN (DYNAMIC) LBS.	FIXTURE (STATIC) LBS.
7826RAC*	Adj. 14-3/4" - 22-1/2"	6	20.0	25		No	50
7825*	Adj. 14-3/4" - 22-1/2" Ground plate	6	20.0	20		No	50

* UL Rated at 16" on center

4" ROUND CEILING FAN/FIXTURE BOX FOR NONMETALLIC SHEATHED CABLE OR CONDUIT

CATALOG NUMBER	DESCRIPTION	KNOCK-OUTS SIDES	CABLE CLAMPS	CU. IN. CAP.	STD. PKG.	UPC BAR CODE	RECOMMENDED MAX. SUPPORT LOADS	
							CEILING FAN (DYNAMIC) LBS.	FIXTURE (STATIC) LBS.
7120*	Ceiling fan box	2-1/2"	4	12.5	20		70	210
7120-1	Ceiling fan box	2-1/2"	4	12.5	24		70	210
7120VB	Ceiling fan	2-1/2"	4	12.5	24		70	210

*Packaged in a stackable, individual chipboard box suitable for shelf display

CAT. NOs. 7120, 7120-1, 7120VB

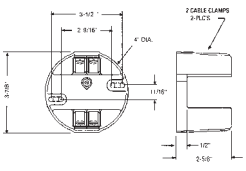

CAT. NOs. 7307, 7907

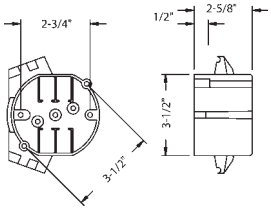

CAT. NOs. 7825, 7826RAC

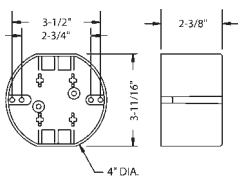

NONMETALLIC CABLE BOXES

CSA CERTIFIED

Applications

- RACO® nonmetallic cable boxes are used in branch circuit wiring to splice wires
- Accommodate wiring devices such as switches and receptacles
- Provide excellent protection for wiring systems or devices

Product Features

- RACO® nonmetallic cable boxes provide the installer with a cost alternative that is lightweight and easy to install
- Self-gripping wire entry clamps
- All outlet boxes have a front-mounted grounding screw with combination straight/ Robertson head
- Positioning tabs provide fast, accurate mounting on studs or joists
- Grounding screw provided

Standard Materials

- Made of high strength Noryl®
- Noryl® is a registered trademark of General Electric Corporation

CAT. NO. 7320

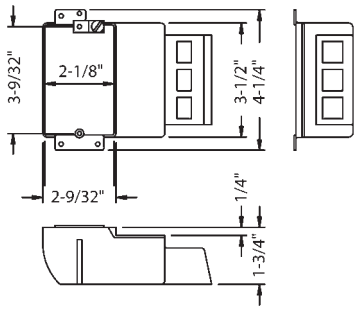

Compliances

- CSA – Specifications C22.2 #18
- Federal Manufacturer's number 28488

7320

7321

ORDERING INFORMATION - DIMENSIONS

SINGLE-GANG SHALLOW, FAST WIRE				
CATALOG NUMBER	DESCRIPTION	CU. IN. CAP.	STD. PKG.	UPC BAR CODE
7320	Shallow, fast wire	17.0	50	—
7321	Fast wire clamp	—	1000	—

HUBBELL RACO

NONMETALLIC CABLE BOXES

VAPOR BARRIER

Applications

- Vapor barrier boxes prevent unwanted penetration of exterior air and help maintain the existing interior environment from elements outside of the structure
- RACO® nonmetallic vapor barrier cable boxes provide the installer with a cost alternative that is lightweight and easy to install
- RACO® nonmetallic cable boxes are used in branch circuit wiring to splice wires
- Accommodate wiring devices such as switches and receptacles
- Serve as fixture support
- Provide excellent protection for wiring systems or devices
- RACO® 2008 FBAR is not designed for ceiling fan support

Product Features

- Self-gripping wire entry clamps
- 2008FBAR, 7120VB boxes have a front-mounted grounding screw with combination straight/ Robertson head
- Vapor/air barrier flange and integral wire entry seal provides superior energy savings and quick installation
- Unique saddle design straddles standard joists
- Hands free installation
- For 1/2", 5/8", or 3/4" drywall
- 7120VB prevents unwanted penetration of exterior air and helps maintain the existing interior environment from the elements outside the structure
- Fits any 1-1/2" wide joist

Standard Material

- Made of high strength Noryl®
- Noryl® is a registered trademark of General Electric Corporation

Compliances

- CSA – Specifications C22.2 #18 2011FBAR, 2002FBAR, 2003FBAR, 2008FBAR
- Federal Manufacturer's number 28488
- UL – Standard 514-C, File E104681 7120VB

2011FBAR 2002FBAR 2003FBAR 2008FBAR 7120VB

ORDERING INFORMATION - DIMENSIONS

VAPOR BARRIER SWITCH BOX - 2-1/4" W. x 3-3/4" H. x 2-3/4" D.

CATALOG NUMBER	DESCRIPTION SETBACK	CABLE CLAMPS	CU. IN. CAP.	STD. PKG.	UPC BAR CODE
2011FBAR	Single-gang with flush bracket, 1/2" setback	4	18.0	100	

VAPOR BARRIER 2-GANG SWITCH BOX - 4-1/8" W. x 3-5/8" H. x 2-3/4" D.

CATALOG NUMBER	DESCRIPTION SETBACK	CABLE CLAMPS	CU. IN. CAP.	STD. PKG.	UPC BAR CODE
2002FBAR	Two-gang with flush bracket, 1/2" setback	8	37.0	50	

VAPOR BARRIER 3-GANG SWITCH BOX - 5-7/8" W. x 3-5/8" H. x 2-3/4" D.

CATALOG NUMBER	DESCRIPTION SETBACK	CABLE CLAMPS	CU. IN. CAP.	STD. PKG.	UPC BAR CODE
2003FBAR	Three-gang with flush bracket, 1/2" setback	12	51.0	50	

VAPOR BARRIER 4" ROUND CEILING BOX - 2-1/4" D.

CATALOG NUMBER	DESCRIPTION	CABLE CLAMPS	CU. IN. CAP.	STD. PKG.	UPC BAR CODE	RECOMMENDED MAX. SUPPORT LOADS	
						CEILING FAN (DYNAMIC) LBS.	FIXTURE (STATIC) LBS.
2008FBAR	Round box with flush bracket, 1/2" setback	4	22.0	50		No	50

VAPOR BARRIER 4" ROUND CEILING FAN BOX - 2-39/64" D.

CATALOG NUMBER	DESCRIPTION	CABLE CLAMPS	CU. IN. CAP.	STD. PKG.	UPC BAR CODE	RECOMMENDED MAX. SUPPORT LOADS	
						CEILING FAN (DYNAMIC) LBS.	FIXTURE (STATIC) LBS.
7120VB	Ceiling fan box	4	12.5	24		70	210

HUBBELL RACO

ENT NONMETALLIC BOXES

Applications
- RACO® ENT boxes are used in branch circuit wiring to splice wires
- Accommodate wiring devices such as switches and receptacles
- Provide excellent protection for wiring system or devices

Product Features
- Knockouts offer greater flexibility with RACO's 1/2" and 3/4" knockout
- TKO® products help to reduce the number of products needed to do the same job
- Unique bracket design features automatic setback gauges for quick installation

Standard Material
- Made of heavy-duty PVC (Polyvinyl chloride) compound

Reference Data
- ENT box U.S. Patent 4,844,275
- Mounting Holes U.S. Patent 4,580,689; Canada Patent 1,237,515
- Hex Device Holes U.S. Patent 4,666,055; Canada Patent 1,260,599

Compliances
- UL – 514-C, File E104681 and R9320
- Boxes are listed for their Electrical Applications (Electrical Codes), UL Green Book
- Boxes are listed for mechanical properties, including the 2-hour Fire Rating, (building codes) UL Orange Book
- ANSI/NEMA TC13-1986
- Federal Manufacturer's number 28488

7050

7053

7054

ORDERING INFORMATION - DIMENSIONS

SINGLE-GANG - METAL OR WOOD STUDS FOR ENT

CATALOG NUMBER	DESCRIPTION	KNOCKOUTS			CU. IN. CAP.	STD. PKG.	UPC BAR CODE
		SIDES	ENDS	BOTTOM			
7050	Bracketed 1/2" setback	1	2	—	18.0	50	

4" SQUARE - METAL OR WOOD STUDS FOR ENT

CATALOG NUMBER	DESCRIPTION	KNOCKOUTS			CU. IN. CAP.	STD. PKG.	UPC BAR CODE
		SIDES	ENDS	BOTTOM			
7053	Bracketed	2-1/2"	6-1/2"	4-1/2"	22.5	50	
7054	Bracketed	2	4	4-TKO®	31.0	50	

DIMENSIONS

CATALOG NUMBER	A INSIDE
7053	1-1/2"
7054	2-1/8"

CAT. NO. 7050

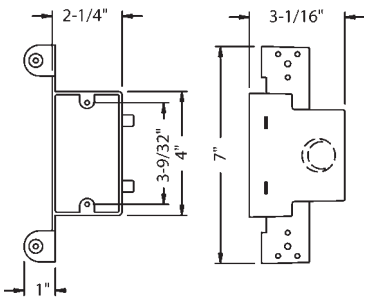

CAT. NOs. 7053, 7054

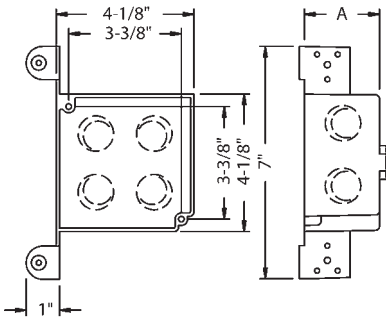

Applications
- RACO® ENT boxes are used in branch circuit wiring to splice wires
- Provide excellent protection for wiring system or devices
- Ceiling boxes on this page are not designed for ceiling fan support

Product Features
- Knockouts offer greater flexibility with RACO's combination 1/2" and 3/4" knockout
- Combination knockouts help to reduce the number of products needed to do the same job

Standard Material
- Made of heavy-duty engineered compound. Base material is polycarbonate

Reference Data
- ENT box U.S. Patent 4,844,275
- Mounting Holes U.S. Patent 4,580,689; Canada Patent 1,237,515
- Hex Device Holes U.S. Patent 4,666,055; Canada Patent 1,260,599

Compliances
- UL – 514-C, File E195978
- File E104681, R9320
- Boxes are listed for their Electrical Applications (Electrical Codes), UL Green Book
- Boxes are listed for mechanical properties, including the 2-hour Fire Rating, (building codes) UL Orange Book
- ANSI/NEMA TC13-1986
- Federal Manufacturer's number 28488

7052

7051

ORDERING INFORMATION - DIMENSIONS

4" ROUND CEILING BOX FOR ENT

CATALOG NUMBER	DESCRIPTION	KNOCKOUTS		CU. IN. CAP.	STD. PKG.	UPC BAR CODE	RECOMMENDED MAX. SUPPORT LOADS	
		SIDES	BOTTOM				CEILING FAN (DYNAMIC) LBS.	FIXTURE (STATIC) LBS.
7052	Bracketed 1/2" Setback	4	2-1/2"	20.3	50		No	50

4" ROUND CEILING - SET-UP FOR SPANNING FROM JOIST TO JOIST FOR ENT

CATALOG NUMBER	DESCRIPTION	KNOCKOUTS		CU. IN. CAP.	STD. PKG.	UPC BAR CODE	RECOMMENDED MAX. SUPPORT LOADS	
		SIDES	BOTTOM				CEILING FAN (DYNAMIC) LBS.	FIXTURE (STATIC) LBS.
*7051	Adjusts 14-1/4 to 22-1/2"	4	2-1/2"	20.3	25		No	50

*UL Rated at 16" on center

CAT. NOs. 7052, 7051

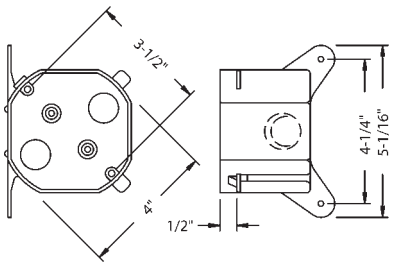

NONMETALLIC BOX ACCESSORIES

COVERS, PLASTIC RINGS, PARTITIONS, STRAPS

Applications

- RACO® ENT covers and plaster rings are used to finish off box installations
- Accommodate wiring devices such as switches and receptacles
- Provide excellent protection for wiring system or devices

Covers, Plaster Rings, Straps Standard Materials

- Made of heavy-duty PVC (Polyvinyl chloride) compound. 7081 is polycarbonate
- 7009 and 7010 are polyethylene

Reference Data

- ENT box U.S. Patent 4,844,275
- Mounting Holes U.S. Patent 4,580,689; Canada Patent 1,237,515
- Hex Device Holes U.S. Patent 4,666,055; Canada Patent 1,260,599

Compliances

- UL – 514-C, File E104681 and R9320
- Covers are listed for their Electrical Applications (Electrical Codes), UL Green Book
- ANSI/NEMA TC13-1986
- Federal Manufacturer's number 28488

7080

7070, 7071

7075, 7076

7090

7081

7009, 7010

ORDERING INFORMATION - DIMENSIONS

4-1/8" SQUARE/ 4" ROUND - COVERS/PLASTER RINGS/PARTITIONS

CATALOG NUMBER	DESCRIPTION	CU. IN. CAP.	STD. PKG.	UPC BAR CODE
7080	Flat, 1/2" KO in center	—	50	
7070	Raised, 1/2", 1 - device	3.3	50	
7071	Raised, 5/8", 1 - device	4.0	50	
7075	Raised, 1/2", 2 -device	6.0	50	
7076	Raised, 5/8", 2 - device	7.3	50	
*7090	Voltage partition	—	50	
7081	Round, flat, 1/2" KO in center	—	50	

* Not UL Listed

ENT CONDUIT STRAP

CATALOG NUMBER	DESCRIPTION	STD. PKG.	UPC BAR CODE
7009	1/2" with preset nail	1000	—
7010	3/4" with preset nail	500	—

HUBBELL RACO

RACO® Floor Boxes

General Applications
RACO floor boxes are ideally suited for heavy floor traffic applications, such as shopping malls, retail stores, banks and schools. Floor boxes are installed in poured concrete floors and are fed with conduit. RACO's complete line includes both single service and three-service (power and voice/data) floor boxes, which are available in cast iron, stamped steel and PVC plastic. Floor box covers and carpet flanges are offered in brushed brass and textured thermoplastic in two designer colors, ivory and gray. RACO floor boxes:

- Are used in branch circuit wiring
- Accommodate wiring devices such as receptacles for voice/data
- Provide excellent protection for wiring system or devices
- Must be closed with a cover
- Permit access to conductors for maintenance

Non-Adjustable Style Floor Box Features
This type of box has no means for adjustment. It is usually installed in wooden floors or used for retrofit in concrete.

RACO quality non-adjustable floor boxes feature:

- Rugged cast iron for strength and ground continuity
- Factory-installed ground wire
- Simple one-piece floor box design offers flexibility for power outlet or voice/data outlets
- Conveniently positioned conduit entries are tapped and plugged

Fully-Adjustable Floor Box Features
This type of box has leveling screws for height and leveling adjustments to be made before the concrete is poured, and final leveling adjustments after the concrete is poured. The maximum leveling adjustment is a 7° tilt.

Fully-Adjustable Floor Boxes feature:

- Concrete-tight floor boxes for use in power or voice/data
- Cast iron boxes classified as water-tight and concrete-tight, typically used below grade where excessive moisture is present
- Choice of materials — stamped steel or cast iron
- Cast iron floor box including factory-installed ground wire, and multiple gang boxes with one ground wire per gang
- Multiple gang boxes provided with low voltage partitions
- Ample wiring space for any combination of power outlet or voice/data outlets

Standard Materials

- Nonmetallic floor box is made of heavy-duty PVC (Polyvinyl chloride) compound. Base material is recycled
- Steel floor boxes are made of .0625 - inch - thick steel
- Cast iron floor boxes are made from cast iron having a high tensile strength
- Solid brass covers and carpet flanges
- Nonmetallic floor box covers and carpet flanges are made of high-strength thermoplastic (ABS).

Standard Finishes

- Natural gray finish on nonmetallic floor box
- Nonmetallic floor box covers and carpet flanges are available in gray and ivory
- Steel boxes have a zinc coating
- Cast iron floor boxes have a gray powder coat paint finish
- Solid brass covers and carpet flanges have a brushed finish

Compliances
Floor boxes are subject to the same code requirements and minimum conductor fill requirements as other boxes. RACO floor boxes carry the following compliances:

- UL Standard 514-A, file E4872
- Boxes are listed for their Electrical Applications (Electrical Codes), UL Green Book
- U.S. Federal Specification and Standards W-C-583B
- Federal Manufacturer's number 28488

Reference Data

- Minimum wiring capacity calculation can be found on pages A8 of this catalog.

Floor Box Installation
Installing a fully-adjustable floor box in a poured concrete floor: RACO provides with all box assemblies or flanges a metallic concrete cover. The concrete cover permits pouring concrete to the top of the box. The cover is then easily removed after the pour. To install the box:

- Locate box and install conduit in accordance with local codes
- Secure box to reinforcing bar (mesh)
- Make pre-pour height and leveling adjustments
- Grease inside of cement cover and install on box
- Grease outside of cement cover
- Apply bead of grease on exposed portion of adjusting collar
- Tape cement cover to box
- Pour concrete
- After the concrete has set, remove the concrete cover
- Pull wires and install wiring device
- Make final pour adjustments, and grout around the box if required
- Install cover plates and/or accessories

SUMMARY OF THE MOST OFTEN REQUESTED ARTICLES OF THE 2008 NATIONAL ELECTRICAL CODE	HOW RACO PRODUCTS HELP COMPLETE THE INSTALLATION
210-52 (a) Dwelling Unit Receptacle Outlets — General Provisions. In every kitchen, family room, dining room, living room, parlor, library, den, sun room, bedroom, recreation room, or similar room or area of dwelling units, receptacle outlets shall be installed so that no point along the floor line in any wall space is more than 6 feet, measured horizontally, from an outlet in that space, including any wall space 2 feet or more in width and the wall space occupied by fixed panels in exterior walls, but excluding sliding panels in exterior walls. The space afforded by fixed room dividers, such as freestanding bar-type counters or railings, shall be included in the 6-foot measurement.	Every 6 feet along the wall surface there should be a receptacle outlet regardless of the room within the dwelling. The purpose of this Article is to eliminate extension cords that are used within the dwelling. Electrically overloaded extension cords are often a source of fires. Installation of a RACO floor box may help alleviate the need for extension cords by locating receptacles where no wall outlets are installed. Receptacle outlets in floors can be counted as part of the required number of receptacles if they are within 18 inches of the wall.
250-146 Connecting Receptacle Grounding Terminal to Box. An equipment bonding jumper shall be used to connect the grounding terminal of a grounding-type receptacle to a grounded box. *Exception (c): Floor boxes designed for and listed as providing satisfactory ground continuity between the box and the device.*	All RACO floor boxes are designed and listed for having ground continuity without an equipment bonding jumper. RACO does provide on all of its cast floor boxes a factory-installed ground wire.
314.27(C) Outlet Boxes —Floor Boxes. Boxes listed specifically for this application shall be used for receptacles located in the floor. Exception: Boxes located in elevated floors of show windows and similar locations where the authority having jurisdiction judges them to be free from physical damage, moisture, and dirt.	Only boxes that are UL Listed for the application may be fastened into the floor.
800.133 (C) Installation of Communications Wires, Cables, and Equipment — Electric Light or Power Circuits. Communications conductors shall not be placed in any raceway, compartment, outlet box, junction box, or similar fitting with conductors of electric light or power circuits or Class 1 circuits.	This Article applies when power and voice/data are brought to one enclosure. A means of dividing the wiring is required. Voltage dividers are available for the following floor box types: PVC floor box and rectangular fully-adjustable.

NON-ADJUSTABLE FLOOR BOX SYSTEM

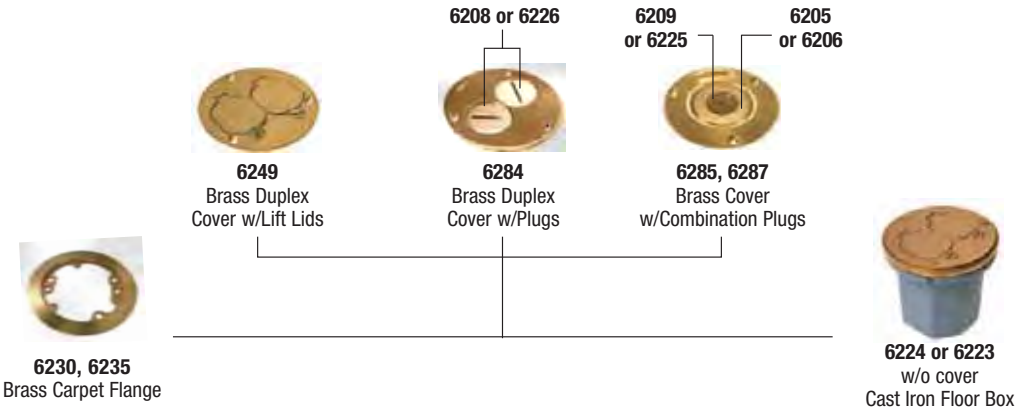

FULLY-ADJUSTABLE FLOOR BOX SYSTEM

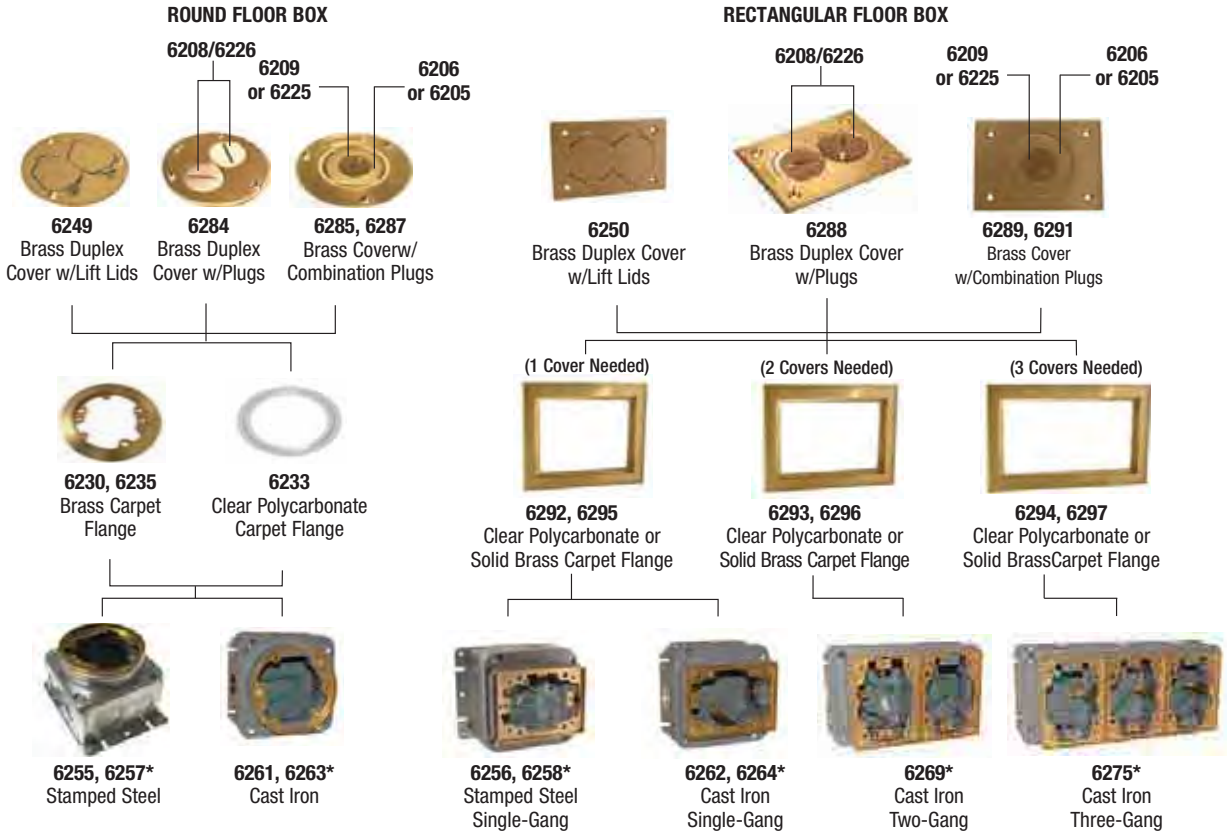

*Included brass tile ring must be removed and discarded before installation of brass carpet flanges.Polycarbonate flanges are installed between box and included brass ring

HUBBELL RACO

PVC FLOOR BOX SYSTEM

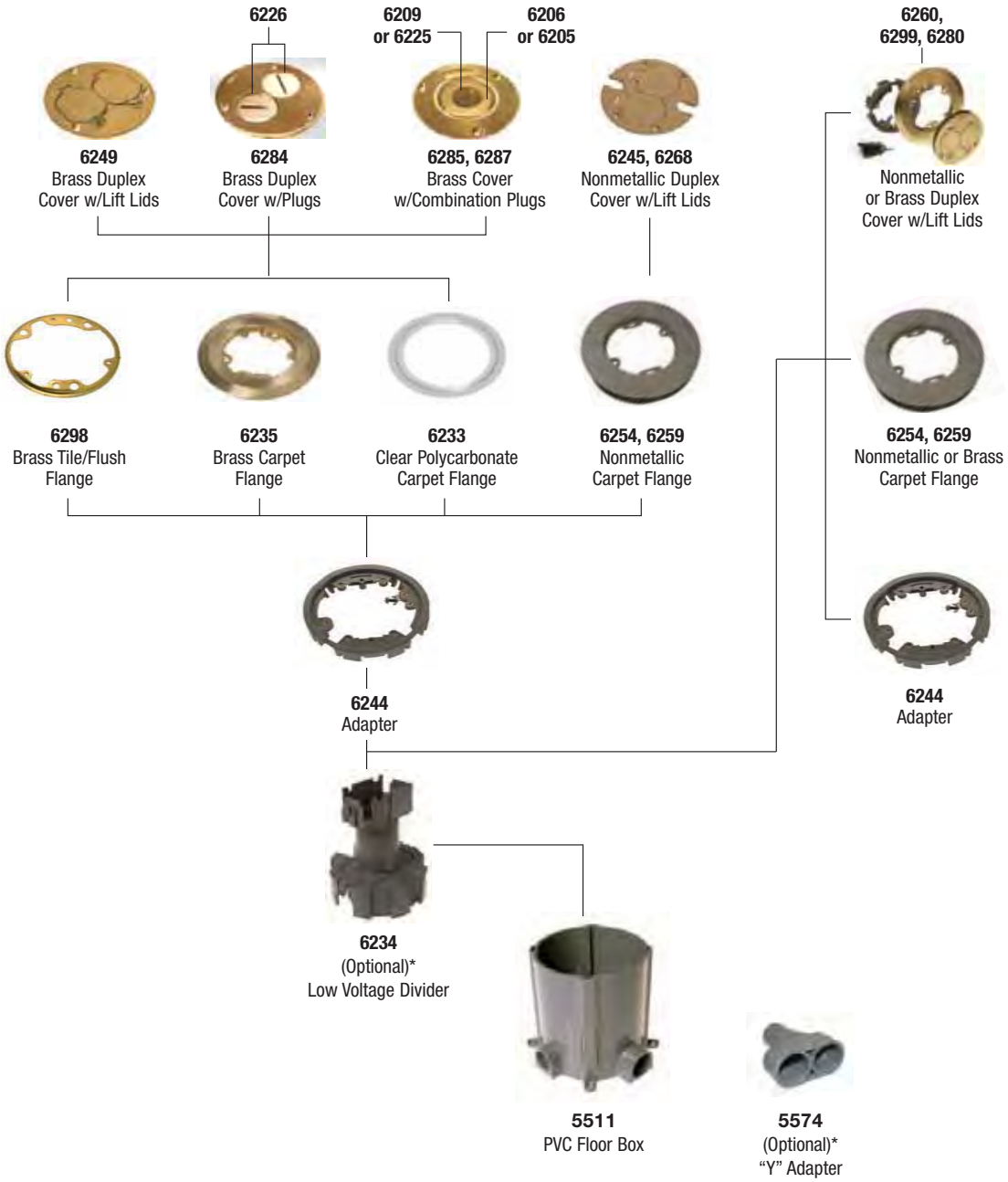

* Nonmetallic Box – Multi-Service Option: A voltage separation units allows the nonmetallic box to be used for telephone/data service as well as power. As shown, the unit has has two pieces. The lower portion has openings on opposite sides for power wires and ramps on the other two sides for telephone/data wires. Power wires run inside tube and attach to duplex receptacle. Telephone/data wires run outside of tube and pass through grommet(s) in the cover

Before installing lower part of voltage separation unit, cut off the same amount from the tube as you cut off the box. Complete the installation of the carpet flange, duplex receptacle and cover

FLOOR BOXES

FOR CONCRETE POUR - NONMETALLIC

Applications
- Used in branch circuit wiring
- Accommodate wiring devices for various receptacles
- Permit access to conductors for maintenance

General Features
- RACO® nonmetallic floor box has been engineered from the inside out with features that reduce installation time and offer increased capabilities from one box in power, voice, and data
- Hubbell nonmetallic floor boxes are economical to install and easy to level off
- A wide choice of cover materials and finishes are available
- 3” minimum pour depth

Low Voltage Divider Features
- Installs inside 5511 floor box for multi-service applications. Use separate conduit runs for power and voice/data cables
- Accepts Hubbell standard duplex receptacles or 15A Twist Lok® duplex receptacles (HBL 4700 series)
- Power capacity — 19.60 cubic inches plus 2.40 cubic inches per inch of tube

Adapter Ring Features
- Required for each 5511 floor box (accepts plastic and metal covers)
- Mechanically fasten adapter to 5511 floor box with included retaining clips and screws. Clips slide into slots in box wall

PVC Floor Box Features
- High-strength rigid non-corrosive PVC construction
- Large capacity box: 100 cubic inches of volume (before cut)
- Molded T-slots permit the adapter ring to be secured to the box no matter where the box has been cut
- One-piece box with pre-molded conduit hubs
- RACO® Y-Adapter permits two parallel feeds of 3/4" conduit, or feed in/out of the same side

Compliance
- UL

5511

6234

5574

6244

ORDERING INFORMATION - DIMENSIONS

ROUND FLOOR BOX AND ACCESSORIES – NONMETALLIC

CATALOG NUMBER	DESCRIPTION	STD. PKG.	UPC BAR CODE
5511	19.5 cubic inch capacity per inch of height 2 - 1” & - 3/4” openings. Temporary cover and (4) reducer/closure plugs included.	1	—
6234	Voltage separation unit, optional	10	—
5574	3/4” Y adapter, PVC	10	—
6244	Adapter ring for all nonmetallic and brass flanges	10	—

NONMETALLIC FLOOR BOX

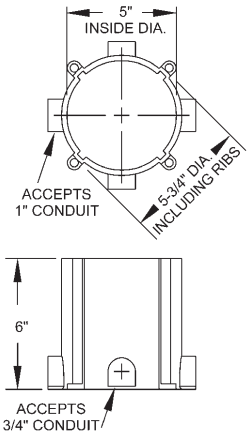

FLOOR BOX KITS, COVERS AND FLANGES

NONMETALLIC/ROUND

Application

- Floor box covers and flanges provide a quick, simple method of completing floor box installation on carpeted floor

Product Features

- Nonmetallic carpet flanges and covers are available in gray or ivory finish
- Covers are outfitted with duplex flaps that automatically close when not in use, preventing breakage and eliminating a potential trip hazard
- Cover design keeps debris out when receptacles are not in use
- Hubbell RACO® carpet flanges and covers install quickly and easily with provide screws
- 3-service floor box cover with duplex flap, two 1/2" diameter low-voltage knockouts. Each low-voltage knockout can accommodate up to (1) 25 pair telephone cable or (1) 50 wire data communications cable.
  Note: Brass cover is not 3-service

Compliance

- UL

6233

6245, 6268

6260

6299

6254, 6259

ORDERING INFORMATION - DIMENSIONS

FLOOR BOX COVER ASSEMBLY KITS NONMETALLIC

CATALOG NUMBER	DESCRIPTION	CARPET FLANGE O.S. DIAMETER	STD. PKG.	UPC BAR CODE
6260	Adapter, nonmetallic ivory carpet flange, Ivory duplex cover - Kit	6-1/2”	10	||||||||
6299	Adapter, nonmetallic gray carpet flange, Gray duplex cover - Kit	6-1/2”	10	||||||||

REPLACEMENT COVERS AND CARPET FLANGES – NONMETALLIC

CATALOG NUMBER	DESCRIPTION	CARPET FLANGE O.S. DIAMETER	STD. PKG.	UPC BAR CODE
6233	Clear polycarbonate carpet flange	5-1/4”	15	||||||||
6245	Ivory nonmetallic duplex cover with lift lids	—	10	—
6268	Gray nonmetallic duplex cover with lift lids	—	10	—
6254	Ivory nonmetallic carpet flange	6-1/4”	10	—
6259	Gray nonmetallic carpet flange	6-1/4”	10	—

REPLACEMENT COVERS

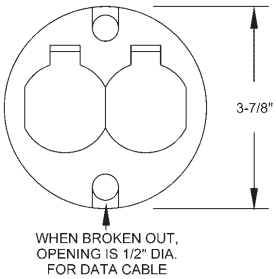

REPLACEMENT CARPET FLANGES

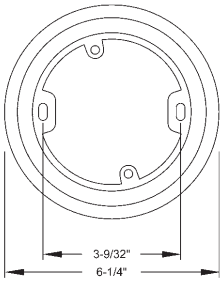

FLOOR BOX COVERS AND FLANGES

BRASS/ROUND

Application

- Floor box flanges and covers are used to complete floor box installations on either carpet or tile

Product Features

- Brass floor box covers are designed to be used with round RACO® carpet and tile flanges and RACO® round full adjustable stamped steel and cast iron floor boxes
- Flanges are designed to be installed to RACO® adapter ring, catalog number 5544
- 6230 is not designed to work with RACO® 5511 nonmetallic floor box
- 6230 and 6235 are not designed to be used with RACO® 6220
- Hubbell RACO® carpet flanges, tile flanges and covers install quickly and easily with provided screws
- Order of installation
  1. Install RACO® floor box
  2. Install nonmetallic adapter ring (if round 5511 nonmetallic box is used)
  3. Install device to box or 5544 adapter
  4. Install carpet or tile flange
  5. Install cover to carpet or tile flange

Compliances

- UL
- CSA

6-1/4" REPLACEMENT CARPET FLANGES

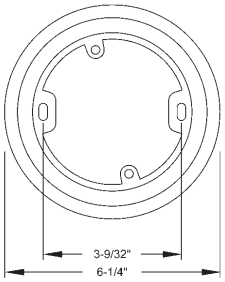

6249

6280 KIT

6284

6285, 6287

6205, 6206

6230, 6235

6298

ORDERING INFORMATION - DIMENSIONS

ROUND COVERS, BRASS 3-7/8" DIA.

CATALOG NUMBER	DESCRIPTION	STD. PKG.	UPC BAR CODE
6249	Brass duplex cover with lift lids	40	
6284	Brass duplex cover with 2, 1-1/2" threaded plugs	40	
6285	Brass cover with 2-1/8" x 1" combination plugs	40	
6287	Brass cover with 2-1/8" x 3/4" combination plugs	40	

FLOOR BOX COVER - FLANGE KIT

CATALOG NUMBER	DESCRIPTION	CARPET FLANGE O.S. DIAMETER	STD. PKG.	UPC BAR CODE
6280	Brass carpet flange, adapter and duplex cover	6-1/2"	10	

CARPET FLANGES

CATALOG NUMBER	DESCRIPTION	CARPET FLANGE O.S. DIAMETER	STD. PKG.	UPC BAR CODE
6230	Brass carpet flange, mop-tight	5-1/4"	10	
6235	Brass carpet flange*	6-1/4"	10	

* 6235 not UL Listed

TILE FLANGE

CATALOG NUMBER	DESCRIPTION	TILE FLANGE O.S. DIAMETER	STD. PKG.	UPC BAR CODE
6298	Brass tile/flush application flange	4-3/16"	15	

FLUSH CAP RINGS

CATALOG NUMBER	DESCRIPTION	RING O.S. DIAMETER	STD. PKG.	UPC BAR CODE
6205	Brass, for 1" plug	2-1/8"	30	
6206	Brass, for 3/4" plug	2-1/8"	30	

HUBBELL RACO

FLOOR BOXES

FOR WOOD FLOORS

Applications

- RACO® wood floor boxes provide flush service for power or voice/data
- Non-adjustable floor boxes may be used in wood or concrete floors and are suitable for carpet, tile or wood floor applications*

Product Features

- Boxes are non-adjustable
- Cast iron, water-tight
- Gray powder coat paint inside and out for additional corrosion resistance
- 1/2" and 3/4" threaded conduit openings are standard; all bottom openings are accessible
- If floor covering is used, discard included brass flush ring and replace with RACO® 6230 or 6235 brass carpet flange
- RACO® 6220 includes box, 2-1/8" brass flush plug cover, brass tile flange, and 15A, 125V single receptacle (H.W.D part number HBL5258)
- RACO® 6224 includes box, 6249 brass duplex cover with lift lids, and brass tile flange. Receptacle is not included
- RACO® 6223 – for use with any RACO® 3-7/8" diameter brass cover (6249, 6284, 6285, 6287) Cover must be ordered separately, brass tile flange included

Compliance

- UL

NON-ADJUSTABLE FLOOR BOX

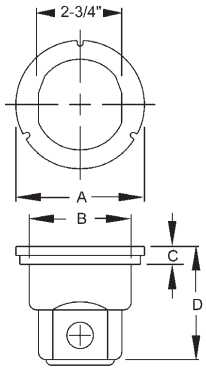

6220

6224

6223

ORDERING INFORMATION - DIMENSIONS

SINGLE RECEPTACLE ASSEMBLY					
CATALOG NUMBER	THREADED/HUBS SIDE	THREADED/HUBS BOTTOM	CU. IN.	STD. PKG.	UPC BAR CODE
6220	2-3/4"	1–1/2", 1-3/4"	10.3	4	

DUPLEX RECEPTACLE ASSEMBLY					
CATALOG NUMBER	THREADED/HUBS SIDE	THREADED/HUBS BOTTOM	CU. IN.	STD. PKG.	UPC BAR CODE
6224	—	2–1/2"	18.5	4	

FLOOR BOX					
CATALOG NUMBER	THREADED/HUBS SIDE	THREADED/HUBS BOTTOM	CU. IN.	STD. PKG.	UPC BAR CODE
6223	—	2–1/2"	18.5	4	

DIMENSIONS – CAST IRON FLOOR BOX				
SIZE	A	B	C	D
6223	4.19"	3.39"	0.59"	3.75"
6224	4.19"	3.39"	0.59"	3.75"
6220	3.44"	2.82"	.22"	2.63"

DIMENSIONS – WOOD FLOOR CUT OUT			
SIZE	A	B	C*
6224	4-1/4"	3-7/16"	5/8"
6220	3-5/8"	2-7/8"	7/16"

* If floor covering is used, vary counter bore depth accordingly. Additional bracing may be required

*CUT OUT FOR FLUSH INSTALLATION

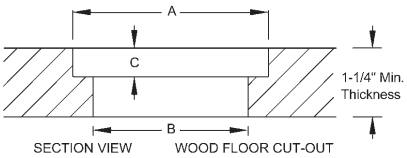

NOTE: Minimum floor thickness is 1-1/4". You may need to add support under the floor around the floor box opening.

FLOOR BOX ASSEMBLY

FOR WOOD FLOORS

Applications

- RACO® #5236 and 6236 floor box provide flush service for power
- Non-adjustable floor boxes may be used in wood floors and are suitable for carpet, tile or wood floor applications

Product Features

- Zinc plated steel yoke for corrosion resistance
- Back wiring – clamp-type terminals accepts up to #10 wire
- Side wiring – large brass binding head screw terminals accepts up to #10 wire
- 15A, 125V receptacle
- Floor box assembly cover plate is .058 thick brushed brass
- Brass cover size is 2-3/4" wide x 4-1/2" long
- Floor box (6236 only) is 3.5" deep

Compliance

- UL

5236

6236

ORDERING INFORMATION - DIMENSIONS

RECEPTACLE-DISPLAY TYPE FOR USE IN DRY LOCATIONS BRASS PLATE AND THREADED PLUG					
CATALOG NUMBER	KNOCKOUTS/HUBS		CU. IN.	STD. PKG.	UPC BAR CODE
	SIDE	BOTTOM			
5236	—	—	—	6	|||||||

FLOOR BOX/PLATE ASSEMBLY/GASKET, BRASS PLATE AND THREADED PLUG FLOOR BOX FOR NON-METALLIC SHEATHED CABLE OR CONDUIT						
CATALOG NUMBER	KNOCKOUTS			CU. IN.	STD. PKG.	UPC BAR CODE
	SIDES CONDUIT	ENDS CABLE	BOTTOM			
6236	4-1/2”	4	1-1/2”	18.0	4	|||||||

HUBBELL RACO

FLOOR BOXES

FOR CONCRETE POUR - ROUND

Applications

- Round floor boxes provide flush service for power or voice/data
- Floor boxes may be used for carpet or tile floor applications

Cast Iron Floor Boxes Product Features

- Cast iron, water-tight body, fully-adjustable
- Painted gray powder coat paint inside and out for additional corrosion resistance
- 3/4" threaded conduit openings are standard

Stamped Steel Floor Boxes Product Features

- Stamped steel, concrete-tight, fully-adjustable
- Zinc-coated finish
- 1/2", 3/4", 1" and 1-1/4" knockouts; all bottom knockouts are accessible

General Product Features

- Brass tile flange provided with box
- RACO® 6230 or 6235 carpet flange must be ordered separately (included brass tile ring must be discarded before installing carpet flange)
- RACO® 6249, 6284, 6285, or 6287 brass cover must be ordered separately
- Interior and exterior leveling screws permit adjustment to meet finished floor
- Disposable concrete cap to prevent the entry of concrete during pour included

Compliances

- UL
- CSA

6255, 6257

6261, 6263

ORDERING INFORMATION - DIMENSIONS

FULLY-ADJUSTABLE FLOOR BOX STAMPED STEEL

CATALOG NUMBER	KNOCKOUTS/HUBS		MIN. DEPTH OF POUR	BEFORE POUR EXT. HT. ADJUST.	AFTER POUR INT. FINAL ADJUST.	CU. IN.	STD. PKG. CODE	UPC BAR
	SIDE	BOTTOM						
6255	2-1/2", 2-3/4" 2-1", 2-1-1/4"	3-1/2", 2-3/4"	4"	1.25"	.38"	54.0	4	
6257	6-1/2", 4-3/4"	3-1/2"	3"	1.25"	.38"	37.3	4	

FULLY-ADJUSTABLE FLOOR BOX CAST IRON

CATALOG NUMBER	KNOCKOUTS/HUBS		MIN. DEPTH OF POUR	BEFORE POUR EXT. HT. ADJUST.	AFTER POUR INT. FINAL ADJUST.	CU. IN.	STD. PKG. CODE	UPC BAR
	SIDE	BOTTOM						
6261	4–3/4"	—	3-3/4"	1.25"	.38"	33.0	4	
6263	4–3/4"	—	3"	1.25"	.38"	30.0	4	

DIMENSIONS

	SHALLOW		DEEP	
	6263 (CAST)	6257 (STEEL)	6261 (CAST)	6255 (STEEL)
MIN. "A"	2.81"	2.91"	3.09"	3.88"
MAX. "A"	3.19"	3.29"	3.47"	4.26"
"B"	1.69"	1.69"	1.94"	2.71"

ADJUSTABLE FLOOR BOX

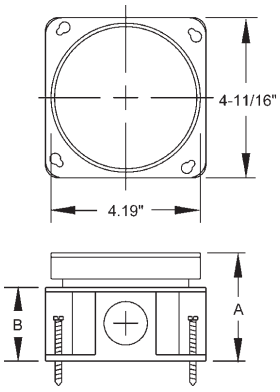

HUBBELL RACO

FOR CONCRETE POUR - RECTANGULAR

Applications

- RACO® rectangular series floor boxes are ideally suited for heavy floor traffic applications, such as malls, department stores, banks and schools
- Floor boxes are installed in poured concrete floors and are fed with conduit
- RACO® floor boxes are used in branch circuit wiring

Cast Iron Floor Boxes Product Features

- Cast iron, water-tight body, fully-adjustable
- Gray powder coat paint inside and out for additional corrosion resistance
- 3/4" threaded conduit openings are standard

Stamped Steel Floor Boxes Product Features

- Stamped steel, concrete-tight, fully-adjustable
- Zinc-coated finish

General Product Features

- Brass tile flange provided with box
- RACO® 6292 or 6295 carpet flange must be ordered separately
- RACO® 6250, 6288, 6289, or 6291 brass cover must be ordered separately
- Disposable concrete cap to prevent the entry of concrete during pour included
- Interior and exterior leveling screws permit adjustment to meet finished floor

SINGLE-GANG

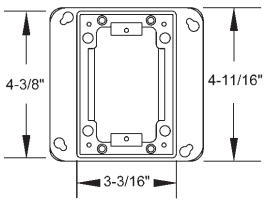

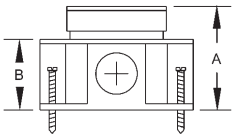

Compliances

- UL
- CSA

6256, 6258

6262, 6264

ORDERING INFORMATION - DIMENSIONS

SINGLE-GANG FLOOR BOX – FULLY-ADJUSTABLE, STAMPED STEEL

CATALOG NUMBER	KNOCKOUTS		MIN. DEPTH OF POUR	BEFORE POUR EXT. HT. ADJUST.	AFTER POUR INT. FINAL ADJUST.	CU. IN.	STD. PKG.	UPC BAR CODE
	SIDE*	BOTTOM						
6256	2-1/2", 2-3/4" 2-1", 2-1-1/4"	3-1/2", 2-3/4"	4"	1.25"	.38"	54.0	4	
6258	6-1/2", 4-3/4"	3-1/2", 2-3/4"	3"	1.25"	.38"	37.3	4	

SINGLE-GANG FLOOR BOX – FULLY-ADJUSTABLE, CAST IRON

CATALOG NUMBER	THREADED/HUBS		MIN. DEPTH OF POUR	BEFORE POUR EXT. HT. ADJUST.	AFTER POUR INT. FINAL ADJUST.	CU. IN.	STD. PKG.	UPC BAR CODE
	SIDE	BOTTOM						
6262	4–3/4"	—	3-3/4"	1.25"	.38"	33.0	4	
6264	4–3/4"	—	3"	1.25"	.38"	30.0	4	

DIMENSIONS

	SHALLOW		DEEP	
	6264 (CAST)	6258 (STEEL)	6262 (CAST)	6256 (STEEL)
MIN. "A"	2.88"	2.81"	3.19"	3.90"
MAX. "A"	3.26"	3.19"	3.57"	4.28"
"B"	1.81"	1.81"	2.06"	2.83"

* 6256 One 1" and one 3/4" knockouts on opposite sides
One 1-1/4" and one 1/2" knockouts on opposite ends

* 6258 One 1/2" and one 3/4" knockouts on opposite ends
Two 1/2" and one 3/4" knockouts on opposite sides

FLOOR BOXES

FOR CONCRETE POUR - RECTANGULAR

Applications

- RACO® rectangular series floor boxes are ideally suited for heavy floor traffic applications, such as malls, department stores, banks and schools
- Floor boxes are installed in poured concrete floors and are fed with conduit
- RACO® multiple-gang rectangular floor box series may be used for both single-service and three-service (power and voice/data) applications
- RACO® floor boxes are used in branch circuit wiring

Product Features

- Cast iron, water-tight body, fully-adjustable
- Gray powder coat paint inside and out for additional corrosion resistance
- Interior and exterior leveling screws permit adjustment to meet finished floor
- Removable partitions included to meet larger capacity requirements on two and three gang boxes
- Disposable concrete cap to prevent the entry of concrete during the pour included
- 3/4" threaded conduit openings are standard
- RACO® 6250, 6288, 6289, or 6291 brass cover must be ordered separately

Compliances

- UL
- CSA

6269

6275

ORDERING INFORMATION - DIMENSIONS

TWO-GANG FLOOR BOX – FULLY-ADJUSTABLE, CAST IRON

CATALOG NUMBER	THREADED/HUBS		MIN. DEPTH OF POUR	BEFORE POUR EXT. HT. ADJUST.	AFTER POUR INT. FINAL ADJUST.	CU. IN.	STD. PKG.	UPC BAR CODE
	SIDE	BOTTOM						
6269	6-3/4"	—	3-3/4"	1.25"	.63"	36.50 ea. gang	1	—

THREE-GANG FLOOR BOX – FULLY-ADJUSTABLE, CAST IRON

CATALOG NUMBER	THREADED/HUBS		MIN. DEPTH OF POUR	BEFORE POUR EXT. HT. ADJUST.	AFTER POUR INT. FINAL ADJUST.	CU. IN.	STD. PKG.	UPC BAR CODE
	SIDE	BOTTOM						
6275	8-3/4"	—	3-3/4"	1.25"	.63"	34.80 mid. gang 36.50 end gangs	1	—

DIMENSIONS

	DEEP	
	6269 (CAST)	6275 (CAST)
MIN. "A"	3.44"	3.44"
MAX. "A"	4.07"	4.07"
"B"	2.10"	2.10"

TWO-GANG

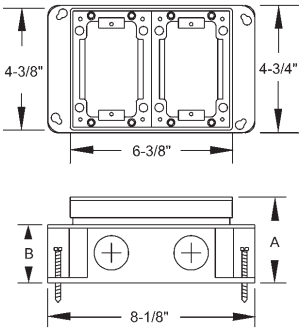

THREE-GANG

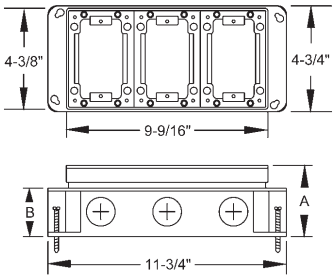

HUBBELL RACO

FLOOR BOX COVERS AND FLANGES

BRASS/RECTANGULAR

Application

- Rectangular floor box brass covers and flanges are used to complete floor box installations

Product Features

- Rectangular brass covers are used with RACO® single gang, two gang, and three gang rectangular floor boxes
- Covers are 3" wide x 4-5/32" long
- Cover screw centers are 3-5/32" x 2-1/8"
- Rectangular carpet flanges are available in brass or clear polycarbonate

Compliances

- UL
- CSA

6292, 6295

6293, 6296

6294, 6297

6250

6288

6289, 6291

ORDERING INFORMATION - DIMENSIONS

RECTANGULAR FLOOR BOX BRASS COVERS

CATALOG NUMBER	DESCRIPTION	STD. PKG.	UPC BAR CODE
6250	Brass duplex cover with lift lids	40	||||||||
6288	Brass duplex cover with 2, 1-1/2” threaded plugs	40	||||||||
6289	Brass cover with 2-1/8” x 1” combination plugs	40	||||||||
6291	Brass cover with 2-1/8” x 3/4” combination plugs	40	||||||||

RECTANGULAR CLEAR POLYCARBONATE AND BRASS CARPET FLANGES

CATALOG NUMBER	DESCRIPTION	STD. PKG.	UPC BAR CODE
6292	1-Gang brass	20	||||||||
6295	1-Gang clear polycarbonate	10	||||||||
6293	2-Gang brass	10	—
6296	2-Gang clear polycarbonate	10	—
6294	3-Gang brass	10	||||||||
6297	3-Gang clear polycarbonate	15	—

HUBBELL RACO

ACCESSORIES AND REPLACEMENT COVERS

Applications

- Brass abandon plugs are sold separately for replacement in brass covers
- Split nozzle for 2-1/8" threaded cover consists of interlocking halves that provide a protective housing when assembled. The nozzle may be easily installed without removing an electrical plug from cord. Nozzle is brass colored plastic

6208, 6209, 6225, 6226

6228

6237

6238

ORDERING INFORMATION - DIMENSIONS

ABANDON PLUGS – BRASS

CATALOG NUMBER	DESCRIPTION	THREAD TYPE	FITS RACO® BRASS COVER	STD. PKG.	UPC BAR CODE
6209	3/4" Crowned, Slotted Plug	—	6287, 6291	30	
6225	1" Crowned, Slotted Plug	—	6285, 6289	25	
6226	1-1/2" Flush Slotted Plug	Fine	6284, 6288	25	
6208	2-1/8" Flush Slotted Plug	Fine	6284, 6288	30	
6206	2-1/8" Flush Cap Ring for 3/4" Plug	—	6287, 6291	30	
6205	2-1/8" Flush Cap Ring for 1" Plug	—	6285, 6289	30	

REPLACEMENT COVER FLANGE & ADJUSTABLE COLLARS

CATALOG NUMBER	DESCRIPTION	STD. PKG.	UPC BAR CODE
6228	Rectangular cover flange	15	—
6237	Rectangular single-gang replacement adjustable collar	10	—
6238	Round replacement adjustable collar	4	—

FLOOR BOXES

SERVICE PEDESTALS AND ACCESSORIES

Service Pedestals Applications

- RACO® above-the-floor service pedestals satisfy most service requirements
- These are the traditional metallic pedestals, offered as component parts to satisfy any combination of power or voice/data requirements

Product Features

- Service pedestal housing die cast aluminum frame, aluminum housing
- Stainless steel faceplates

Pedestal Capacity Chart

- (Power or voice/data devices) In certain cases, the pedestal will accommodate two receptacles. In other cases, a device may be too deep, and the maximum capacity is one receptacle

SERVICE PEDESTAL

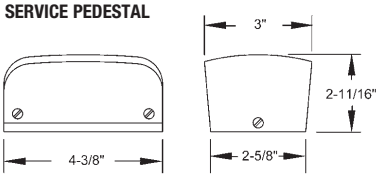

Compliance

- UL

6300, 6301

6310

6311

6312

6313

6314

6315

ORDERING INFORMATION - DIMENSIONS

LOW-PROFILE SERVICE PEDESTAL HOUSING - SINGLE SERVICE FOR POWER OR VOICE/DATA

CATALOG NUMBER	DESCRIPTION	STD. PKG.	UPC BAR CODE
6300	Frame housing, 3/4" chase nipple, w/o plates	4	
6301	Frame housing, 1" chase nipple, w/o plates	4	

Create your own pedestal to meet specific service requirements
Order housing, face plates separately

FACE PLATES

CATALOG NUMBER	DESCRIPTION	STD. PKG.	UPC BAR CODE
6310	Rectangular cover flange	25	
6311	Telephone bushing with 1.00" ID and (2) 3/8" KO for coaxial	25	
6312	Single receptacle plate with 1.39" opening	25	
6313	Duplex receptacle plate	25	
6314	Decorator style receptacle plate	25	
6315	Aluminum plate with 1.11" KO	25	

VOICE/DATA COMBINATIONS

MAX. NO. OF RECPT.	RECEPTACLE TYPE	PLATE(S) QTY.	REQUIRED RACO® CATALOG NUMBER
1	Duplex jack outlet	1	6313, 6310
1	Decorator style of telephone outlet	1	6314, 6310
2	Decorator style of coaxial outlet	2	6314
0	Bushed opening	1	6311, 6310

POWER COMBINATIONS

MAX. NO. OF RECPT.	RECEPTACLE TYPE	PLATE(S) QTY.	REQUIRED RACO® CATALOG NUMBER
2	Duplex receptacles	2	6313
1	GFI receptacle	1	6314, 6310
1	Surge duplex receptacle	1	6314, 6310
2	Decorator receptacles	2	6314
2	Single receptacles	2	6312