Overview

Finishes

1. Galv-Krom®

Commonly referred to as "gold," the Galv-Krom® finish is a combination of .5 mils electro-plated zinc and a gold trivalent chromium finish, offering superior rust protection and excellent electrical conductivity.

2. SilverGalv® (Suffix EG)

Often referred to as "zinc plated" or "electroplated zinc," the SilverGalv® finish applies .5 mils of zinc and a clear conversion coat. Electro-galvanizing is available for channel as well as small fittings, hardware and threaded products.

3. Pre-galvanized Steel (Suffix PG)

In addition to the standard Galv-Krom® finish, all Kindorf® channels are available in pre-galvanized steel. This material is identical to the standard steel except for its ASTM G-90 zinc coating. This coating is applied at the steel mill prior to the channel fabrication.

4. Green Coated (Suffix GR)

Green urethane powder resins are applied electrostatically to the steel after fabrication. Once the material is completely covered with the powdered-form urethane, it proceeds through a 400° baking process for ten minutes, creating a chemical bond. This results in a minimum of 1.5 mil thickness of urethane coating providing excellent resistance to chipping or peeling.

5. Hot-Dipped Galvanized (Suffix HD)

The material is zinc coated after fabrication providing total product protection on all surfaces. The fabricated channel or fitting is suspended and then dipped into tanks of hot zinc for a prolonged period, creating a coherent bond. The result is superior corrosion resistance as compared to pre-galvanized material. Hot-dipped galvanizing is not recommended for threaded products, considering the zinc coating thickness will often disrupt the threads.

Kindorf® hot-dipped galvanized channel is in conformance with ASTM Specifications A-123 (formerly A-386) and A-153.

Kindorf® channels maintain a minimum 1.5 ounces of zinc per square foot of steel or 2.5 mils (ASTM A-123, Thickness Grade 65). This finish is also referred to as "Hot-dipped galvanized after fabrication."

6. PVC Coated (Prefix P)

A polyvinyl chloride (PVC) plastic coating is fused to the channel, fitting or accessory after fabrication by immersing the part in fluidized PVC tanks. The fused-melt mixed powder PVC coating thickness is 15 mils (.015") plus or minus five mils. PVC material is a thermoplastic and will soften in high temperatures. An inherent weakness with PVC coatings occurs when field alterations are applied, such as cutting or drilling. These acts disrupt the sealed PVC product and warrant field touch-up. Thomas & Betts cannot be held responsible for field-altered PVC coated products.

Materials

1. Standard Steel

The standard Kindorf® Channel is made from high-quality ASTM A570 Grade 40 carbon steel sheet. These sections are cold formed into a unique and modular profile by an efficient roll forming process. Additionally, the process "cold works" the steel is to give it greater mechanical properties.

2. Extruded Aluminum (Suffix AL)

For more corrosive environments, T&B also offers extruded aluminum channel sections. These section are nearly identical to their steel counterparts. Aluminum channel is made from 6063 Aluminum and heat treated to a T-6 specification.

3. Non-Metallic (Suffix N)

Kindorf® channels are also available in fiberglass-reinforced polyester and vinylester. These products are pultruded into shapes similar to steel channels. They offer a high degree of corrosion protection and are very lightweight.

4. Stainless Steel (Suffix SS)

For the most corrosive environments, T&B offers Type 304 Stainless Steel channel sections and accessories. Type 316 stainless available upon request. Contact your local sales rep. These products are identical to their carbon steel counterparts except for a much greater corrosion resistance.

Warning

Load tables, charts and design criteria provided in this catalog are intended as guides only. Selection of proper product, installation intervals, erection and placement are the responsibility of the user.

Kindorf® products are intended to be used for the support and bracing of fixtures, cable, pipe and conduit. Improper use or installation may result in injury to persons or damage to property.

Material and finish specifications are subject to change without notice.

Conduit, Cable and Pipe Supports

C-105 and C-106 Pipe Straps

Kindorf® Pipe Straps are designed to be twist inserted anywhere along the slot side of the channel. Pipes can be placed as closely as pipe couplings permit.

Some unique features of the straps include:

- Bolt head is combination slot and hex head for flexibility of attachment
- Square nut is captivated on the shoulder for easy one-handed tightening
- Straps are interchangeable with 1⅝" strut for broader application
- Straps are shipped assembled so counting and sorting are easier
- Pipe or conduit sizes are shown on the strap for easy identification

All Kindorf® Straps are pre-assembled for easy handling and sorting.

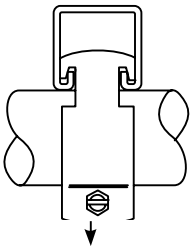

Design Load

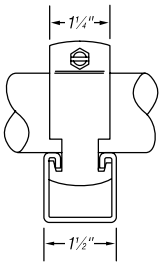

Kindorf® Straps for Rigid Conduit, IMC and Pipe

CAT. NO.	STEEL STRAPS — GALV-KROM® FINISH: RIGID CONDUIT OR PIPE SIZE (IN.)	O.D. SIZE (IN.)	STEEL STRAP THICKNESS	DESIGN LOAD (LBS.)	WT. LBS./C
C-105-3/8	⅜	.675	14 ga.	750	12
C-105-1/2	½	.840	14 ga.	750	13
C-105-3/4	¾	1.050	14 ga.	750	15
C-105-1	1	1.315	14 ga.	750	17
C-105-1-1/4	1¼	1.660	14 ga.	800	19
C-105-1-1/2	1½	1.900	12 ga.	800	28
C-105-2	2	2.375	12 ga.	800	31
C-105-2-1/2	2½	2.875	12 ga.	1000	36
C-105-3	3	3.500	12 ga.	1650	42
C-105-3-1/2	3½	4.000	11 ga.	1650	56
C-105-4	4	4.500	11 ga.	1650	64
C-105-4-1/2	4½	5.000	11 ga.	1650	72
C-105-5	5	5.563	11 ga.	1650	76
C-105-6	6	6.625	11 ga.	1650	89
C-105-8	8	8.625	11 ga.	1650	114
C-105-10	10	10.750	10 ga.	1650	160
C-105-12	12	12.750	10 ga.	1650	165

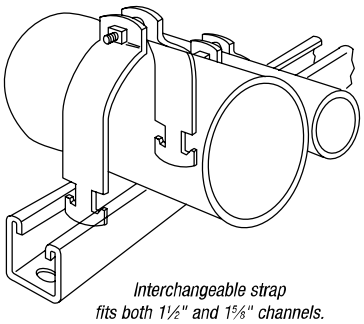

Interchangeable strap fits both 1½" and 1⅝" channels.

Kindorf® Straps for EMT

CAT. NO.	STEEL — GALV-KROM® FINISH: EMT SIZE (IN.)	O.D. SIZE (IN.)	STEEL STRAP THICKNESS	DESIGN LOAD (LBS.)	WT. LBS./C
C-106-3/8	⅜	.577	14 ga.	750	13
C-106-1/2	½	.706	14 ga.	750	14
C-106-3/4	¾	.922	14 ga.	750	13
C-106-1	1	1.163	14 ga.	750	16
C-106-1-1/4	1¼	1.510	14 ga.	750	19
C-106-1-1/2	1½	1.740	12 ga.	800	20
C-106-2	2	2.197	12 ga.	800	22