LEVITON®

Single Pole Cam-Type Connectors

15, 16 & 18 Series: For applications up to 400A, 600V AC/DC

rhino-hide®

Overview

Rhino-Hide Single Pole Cam-Type Connectors from Leviton supply temporary electrical power distribution for multiple indoor and outdoor applications.

Features and Benefits

- Plugs are available in set screw or crimp tube termination, taper nose and ball nose configurations
- Intermateable and compatible with competitive cam-type products — can be retrofitted to existing locations and power distribution systems
- Shatter and crack proof – high durometer thermoplastic vulcanizate (TPV) or neoprene rubber
- Color-coded insulating sleeves provide fast and easy phase identification
- Self compensating for wear – slit in male contact provides spring action for longer usage
- Quick connect/disconnect
- High conductivity – positive, vibration-proof connection provided by cam design
- Wide range of applications – usable with a wide range of cable and amperage ratings
- Meets NEC requirements and is UL Listed and CSA Certified; NEMA 3R-Rated for use in outside locations

Experience the Difference

Rhino-Hide Single Pole Cam-Type Connectors are designed for easy assembly and disassembly without special tools. A thermoplastic screw is used to tightly secure the contact inside the insulating sleeve, making assembly, disassembly and field repairs effortless. The plugs use plastic locking and reinforcement rings molded into insulating sleeves and receptacles ensuring the integrity of the connection. Under severe stress and load conditions, these rings will not melt, break or crack.

UL/CSA 1691 Compliant

rhino-hide®
Single Pole Cam-Type Connectors

For applications up to 400A, 600V AC or DC

Common Applications

- Sports, Entertainment and Movie Industry
- Theme Parks and Carnival Equipment
- Concert Venues and Convention Centers
- Motor and Generator Splices
- Mining Operations
- Welding and Construction Sites
- Commercial and Navy Shipbuilding/Repair
- Petrochemical and Manufacturing Plant Turnarounds
- Numerous Other Temporary Power Applications

Ordering Information

15 Series: Single Set Screw or Crimp Tube Termination — NEMA 3R Rated for Indoor/Outdoor Use

The 15 Series Taper Nose mini-cam plugs, receptacles and connectors are tough and reliable. Primary applications include carnivals and theme parks, as well as other entertainment applications.

15D21-UG

15R21-UR

15R22-UH

15S31-UB

15D22-UY

CAM-TYPE PLUGS

	Single Set Screw Termination Ⓤ Ⓒ	
Cable Size: #8 - #2 Max Ampacity: 150A	Male Plug	Female Plug
	15D21-U*	15D22-U*
Replacement Contacts	15D21-UC	15D22-UC
	Crimp Tube Termination Ⓤ Ⓒ	
Cable Size: #8 - #4 Max Ampacity: 140A	Male Plug	Female Plug
	15D23-U*	15D24-U*
Replacement Contacts	15D23-UC	15D24-UC

Replace * with the following: W (White), E (Black), H (Brown), R (Red), B (Blue), O (Orange), G (Green), Y (Yellow).

REPLACEMENT SLEEVES

	Male Plug	Female Plug
	15SDM-1U*	15SDF-1U*

Replace * with the following: W (White), E (Black), H (Brown), R (Red), B (Blue), O (Orange), G (Green), Y (Yellow).

CAM-TYPE PANEL MOUNT RECEPTACLES

	.5" Threaded Stud Term. Ⓤ Ⓒ		.75" Threaded Stud Term. Ⓤ Ⓒ	
Cable Size: #8 - #2 Max Ampacity: 150A	Male Plug	Female Plug	Male Plug	Female Plug
	15R21-U*	15R22-U*	15R21-1U*	15R22-1U*

Replace * with the following: W (White), E (Black), H (Brown), R (Red), B (Blue), O (Orange), G (Green), Y (Yellow).

COVERS

	Enclosure Male/Female
	15S31-U*

Replace * with the following: W (White), E (Black), H (Brown), R (Red), B (Blue), O (Orange), G (Green), Y (Yellow).

Note: Some items may require extended lead times; always consult with your local sales representative for current availability.

16 Series: Single or Double Set Screw or Crimp Tube Termination — NEMA 3R Rated for Outdoor Use

The 16 Series Taper Nose products are the connectors of choice for power distribution for construction sites, mining operations, concerts, sound stages, movie-making, television production, sporting events and conventions.

16D21-UR

16D29-UG

16D24-UE

16D33-UO

CAM-TYPE PLUGS

Cable Size: #6 - #2 **Max Ampacity: 190A**	**Double Set Screw Termination** Ⓤ Ⓒ			
	Male Plug		Female Plug	
	16D44-U*		16D45-U*	
Cable Size: #2 - #1 **Max Ampacity: 220A**	**Crimp Tube Termination** Ⓤ Ⓒ			
	Male Plug		Female Plug	
	16D25-U*		16D34-U*	
Cable Size: #2 - 2/0 **Max Ampacity: 300A**	**Single Set Screw Termination**		**Double Set Screw Termination** Ⓤ Ⓒ	
	Male Plug	Female Plug	Male Plug	Female Plug
	16D21-U*	16D29-U*	16D22-U*	16D31-U*
Replacement Contacts	—	—	16D22-UC	16D31-UC
Cable Size: 1/0 - 2/0 **Max Ampacity: 300A**	**Crimp Tube Termination** Ⓤ Ⓒ			
	Male Plug		Female Plug	
	16D26-U*		16D35-U*	
Cable Size: 2/0 - 4/0 **Max Ampacity: 400A**	**Single Set Screw Termination**		**Double Set Screw Termination** Ⓤ Ⓒ	
	Male Plug	Female Plug	Male Plug	Female Plug
	16D23-U*	16D32-U*	16D24-U*	16D33-U*
Replacement Contacts	—	—	16D24-UC	16D33-UC
Cable Size: 3/0 - 4/0 **Max Ampacity: 400A**	**Crimp Tube Termination** Ⓤ Ⓒ			
	Male Plug		Female Plug	
	16D28-U*		16D37-U*	

Replace * with the following: W (White), E (Black), H (Brown), R (Red), B (Blue), O (Orange), G (Green), Y (Yellow).

REPLACEMENT SLEEVES (TPV)

	For Plugs 1/0 to 4/0		**For Plugs #2 - 2/0**	
	Male Plug	Female Plug	Male Plug	Female Plug
	16SDM-1U*	16SDF-1U*	16SDM-2U*	16SDF-2U*

Replace * with the following: W (White), E (Black), H (Brown), R (Red), B (Blue), O (Orange), G (Green), Y (Yellow).

CAM-TYPE PLUGS

Cable Size: 2/0 - 4/0 **Max Ampacity: 400A** **Flame Retardant**	**Double Set Screw Termination** Ⓤ Ⓒ	
	Male Plug	Female Plug
	16D40-U	16D41-U

These devices available in White only.

Note: Some items may require extended lead times; always consult with your local sales representative for current availability.

Ordering Information

16 Series: Single or Double Set Screw or Crimp Tube Termination — NEMA 3R Rated for Outdoor Use

16R21-UR

16R24-UW

16R28-UB

16A32-UR

16A23-UB

CAM-TYPE PANEL MOUNT RECEPTACLE

Cable Size: 2/0 - 4/0 Max Ampacity: 400A	Double Set Screw Termination				
	Male, 90°	Female, 90°		Male, 45°	Female, 45°
	16R21-U*	16R22-U*		16R27-U*	16R28-U*
Cable Size: #2 - 4/0 Max Ampacity: 400A	.75"L Threaded Stud** Termination				
	Male, 90°	Female, 90°	w/microwsitch	Male, 45°	Female, 45°
	16R23-U*	16R24-U*	16RSW-U*	16R29-U*	16R30-U*
Cable Size: #2 - 4/0 Max Ampacity: 400A	1.125"L Threaded Stud** Termination				
	Male, 90°	Female, 90°	Self-Clinching Nut Male, 90°	Self-Clinching Nut Female, 90°	
	16R23-1U*	16R24-1U*	16R25-1U*	16R26-1U*	
Cable Size: #2 - 4/0 Max Ampacity: 400A	1.25"L Threaded Stud** Termination - 0.75" Extended Shoulder				
	Male, 90°		Female, 90°		
	16R31-X*		16R32-X*		
Cable Size: #2 - 4/0 Max Ampacity: 400A	Half Round w/Tapped Hole				
	Male, 90°		Female, 90°		
	16R19-U*		16R20-U*		

Replace * with the following: W (White), E (Black), H (Brown), R (Red), B (Blue), O (Orange), G (Green), Y (Yellow).
**Threaded stud termination type receptacles are available with custom stud lengths, from .75"L to 3.00"L.
Please contact your local sales representative for ordering information and availability.

TERMINAL CONNECTORS

Cable Size: #2 - 4/0 Max Ampacity: 400A	Bus Bar Mount		
	Male Angle	Female Angle	Offset
	16M21-2U*	16F21-U*	16F22-U*

Replace * with the following: W (White), E (Black), H (Brown), R (Red), B (Blue), O (Orange), G (Green), Y (Yellow).

COVERS

	Enclosure Male/Female	Caps Male	Caps Female
	16S31-U*	16P21-U*	16P22-U*

Replace * with the following: W (White), E (Black), H (Brown), R (Red), B (Blue), O (Orange), G (Green), Y (Yellow), CL (Clear).

CAM-TYPE ADAPTERS

Max Ampacity: 400A	Paralleling Tee F-M-M	Tapping Tee F-F-M	3-Fer M-F-F-F	Reverse 3-Fer F-M-M-M
	16A21-U*	16A22-U*	16A23-U*	16A26-U*
Max Ampacity: 400A	Double Male		Double Female	
	16A25-U*		16A24-U*	

Replace * with the following: W (White), E (Black), H (Brown), R (Red), B (Blue), O (Orange), G (Green), Y (Yellow).

Assembled Adapters Cable Size: 4/0 Max Ampacity: 400A	Paralleling Tee F-M-M	Tapping Tee F-M-F	3-Fer M-F-F-F	Reverse 3-Fer F-M-M-M
	16A31-U*	16A32-U*	16A33-U*	16A36-U*

Replace * with the following: W (White), E (Black), R (Red), B (Blue), G (Green).

Note: Some items may require extended lead times; always consult with your local sales representative for current availability.

18 Series: Single or Double Set Screw Termination — NEMA 3R Rated for Outdoor Use

18D21-UG

18R21-UB

18F21-UW

18R24-UG

18D26-UG

The 18 Series Ball Nose plugs, receptacles and connectors are used by the broadcast industry in Canada, as well as the welding industry in the United States.

CAM-TYPE PLUGS

	Single Set Screw Termination		Double Set Screw Termination	
	Male Plug	Female Plug	Male Plug	Female Plug
Cable Size: #2 - 2/0 Max Ampacity: 300A	18D21-U*	18D29-U*	18D22-U*	18D31-U*
Cable Size: 2/0 - 4/0 Max Ampacity: 400A	18D23-U*	18D32-U*	18D24-U*	18D33-U*

Replace * with the following: W (White), E (Black), H (Brown), R (Red), B (Blue), O (Orange), G (Green), Y (Yellow).

CAM-TYPE PANEL MOUNT RECEPTACLES

	.75"L Threaded Stud** Termination	
	Male, 90°	Female, 90°
Cable Size: #2 - 4/0 Max Ampacity: 400A	18R21-U*	18R22-U*
	Double Set Screw Termination	
	Male, 90°	Female, 90°
Cable Size: 2/0 - 4/0 Max Ampacity: 400A	18R23-U*	18R24-U*

Replace * with the following: W (White), E (Black), H (Brown), R (Red), B (Blue), O (Orange), G (Green), Y (Yellow).
**Threaded stud termination type receptacles are available with custom stud lengths, from .75"L to 3.00"L.
Please contact your local sales representative for ordering information and availability.

FEMALE TERMINAL CONNECTORS / COVERS

	Bus Bar Mount		Caps	
	Angle	Offset	Male	Female
Cable Size: #2 - 4/0 Max Ampacity: 400A	18F21-U*	18F22-U*	18P21-U*	18P22-U*

Replace * with the following: W (White), E (Black), H (Brown), R (Red), B (Blue), O (Orange), G (Green), Y (Yellow).

CAM-TYPE ADAPTERS

	Paralleling Tee F-M-M	Tapping Tee F-F-M	3-Fer M-F-F-F
Max Ampacity: 400A	18A21-UW	18A22-UW	18A23-UW

	Double Male	Double Female
Max Ampacity: 400A	18A25-UW	18A24-UW

Replace * with the following: W (White), E (Black), H (Brown), R (Red), B (Blue), O (Orange), G (Green), Y (Yellow).

Note: Some items may require extended lead times; always consult with your local sales representative for current availability.

Accessories

15 SERIES DEVICES

"Com-A-Long"Assembly Tools	15CLM-U for Female Plug	15CLF-U for Male Plug
Lubricating Spray (16 Fl. oz. can)	C0001	
Copper Shims (Sold 10 per package)	A0006	
Strain Relief Wire (Sold 10 per package)	A0007	
Set Screws (Sold 10 per package)	A0001	
Plastic Screws (Sold 10 per package)	A0011	

16 AND 18 SERIES DEVICES

"Com-A-Long"Assembly Tools	16CLM-U for Female Plug	16CLF-U for Male Plug
Lubricating Spray (16 Fl. oz. can)	C0001	
Copper Shims (Sold 10 per package)	A0004	
Strain Relief Wire (Sold 10 per package)	A0003	
Set Screws (Sold 10 per package)	A0002	
Plastic Screws (Sold 10 per package)	A0010	

16CLM-U

C0001

16CLF-U

Specifications

Material Specifications

Insulator:	TPV
Contact:	Solid Brass
Strain Relief:	Copper Wire
Assembly Screw:	Thermoplastic

Standards and Certifications

NEMA:	3R
UL:	1691
CSA:	C22.2 No. 1691-12

Ampacity Table

Cable Size	Ampacity
#8	80
#6	105
#4	140
#2	190
#1	220
1/0	260
2/0	300
3/0	350
4/0	405

Excerpted from NEC Article 400, Table 400.5(A)(2), 90° column

Dimensional Diagrams

15 Series Devices

Male Plug

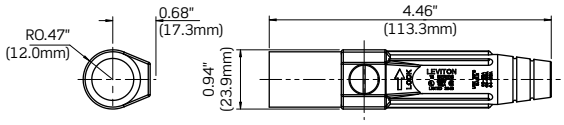

Female Plug

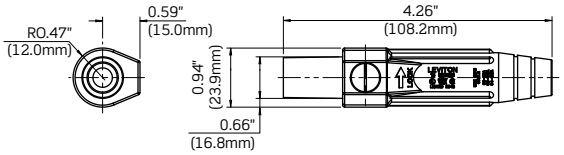

Male Panel Receptacle

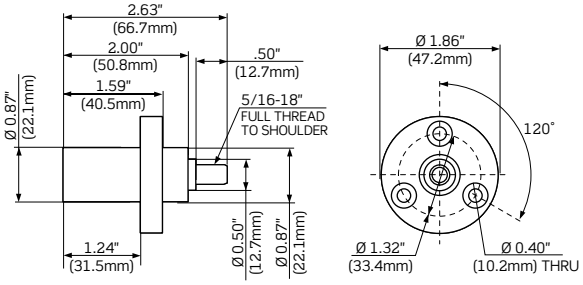

Female Panel Receptacle

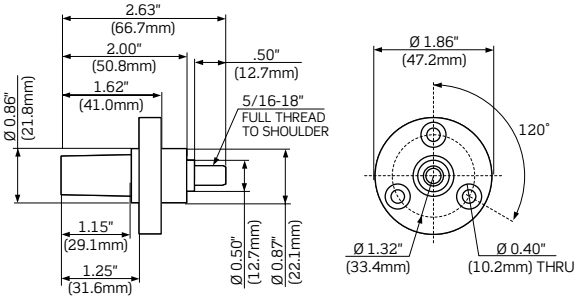

Enclosure for Male and Female Panel Receptacles

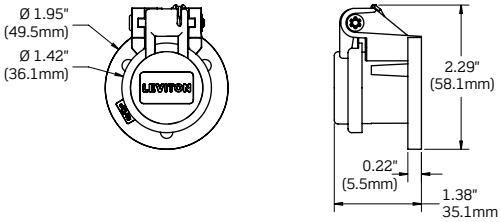

Dimensional Diagrams

16 Series Devices

Male Detachable Plug

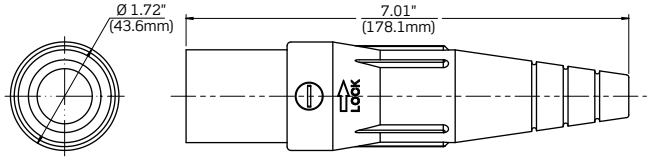

Female Detachable Plug

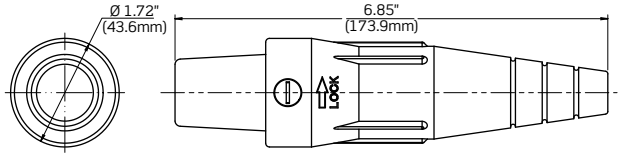

16F21 Female Terminal Connector

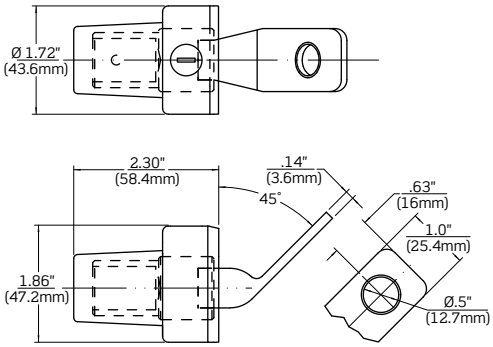

16F22 Female Terminal Connector

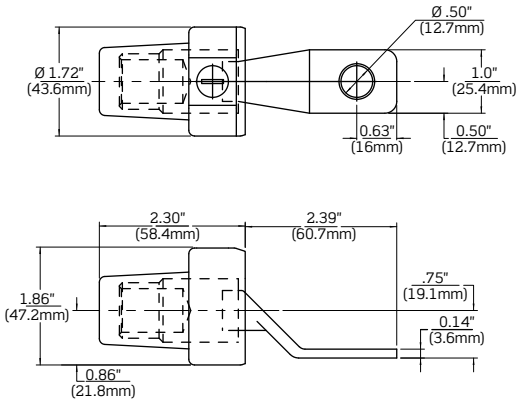

Male Protective Cap

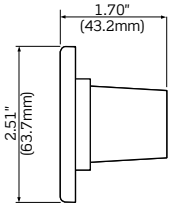

Female Protective Cap

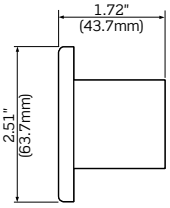

Enclosure for Male and Female Panel Receptacles

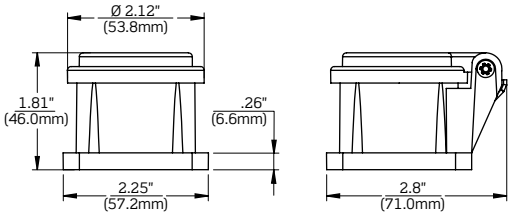

16 Series Devices

Typical Front for
45° Male Panel Receptacle

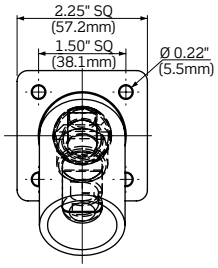

Typical for Double
Set Screw Termination

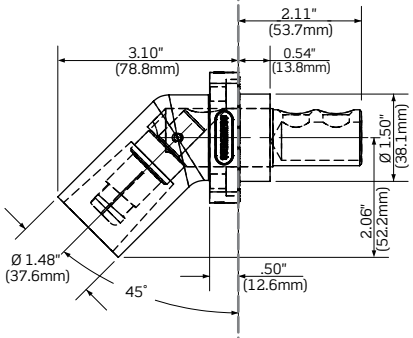

Typical Front for
45° Female Panel Receptacle

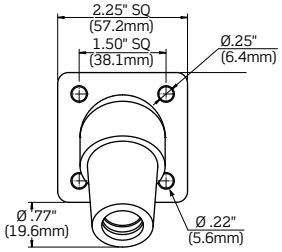

Typical for Threaded
Stud Termination

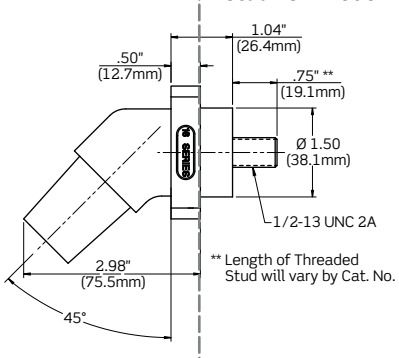

** Length of Threaded
Stud will vary by Cat. No.

Typical Front for
Male Panel Receptacle

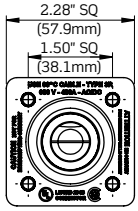

Typical for Bus Bar
Termination (Top View)

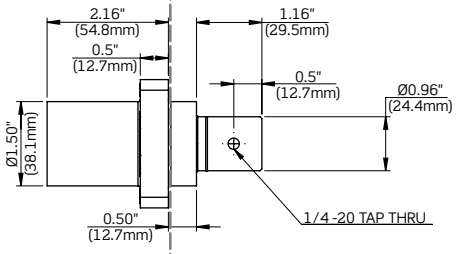

Typical for Threaded Stud with
0.75" Extended Shoulder (Top &
Side Dimensions are Consistent)

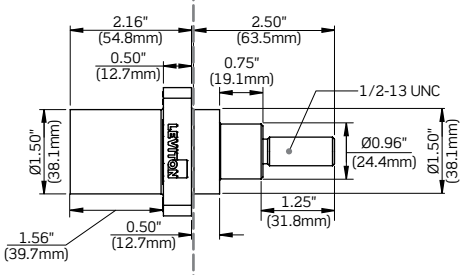

Typical Front for Female Panel
Receptacle with PEM Nuts

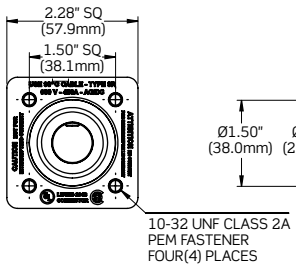

Typical for Bus Bar
Termination (Side View)

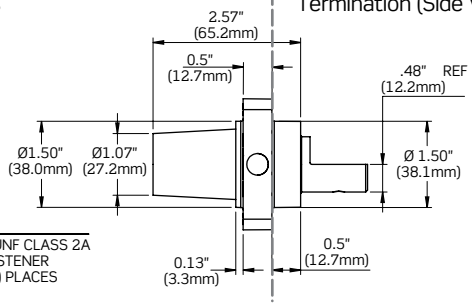

Typical for Threaded Stud with
0.75" Extended Shoulder (Top &
Side Dimensions are Consistent)

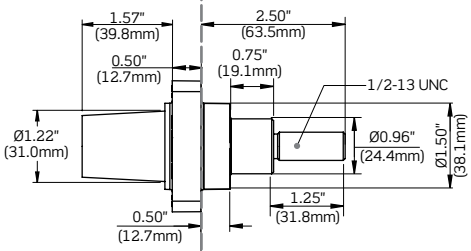

Dimensional Diagrams

16 Series Devices

Paralleling Tee
Adapter 16A21

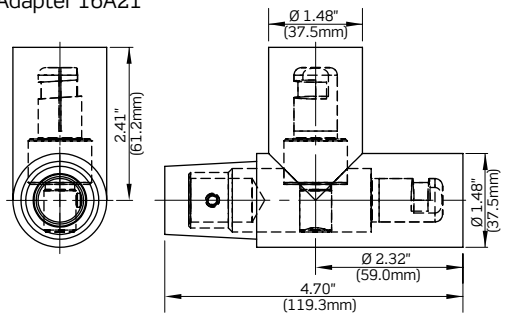

Tapping Tee
Adapter 16A22

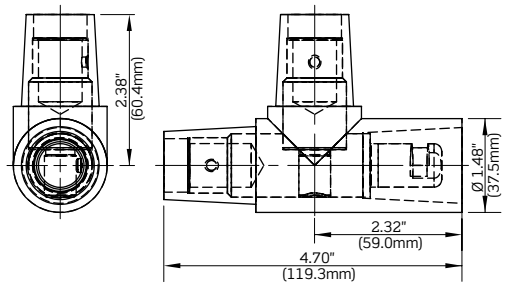

Double Female
Adapter 16A24

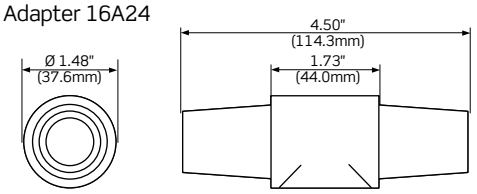

Double Male
Adapter 16A25

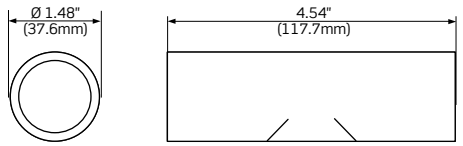

3-Fer Adapter
16A23

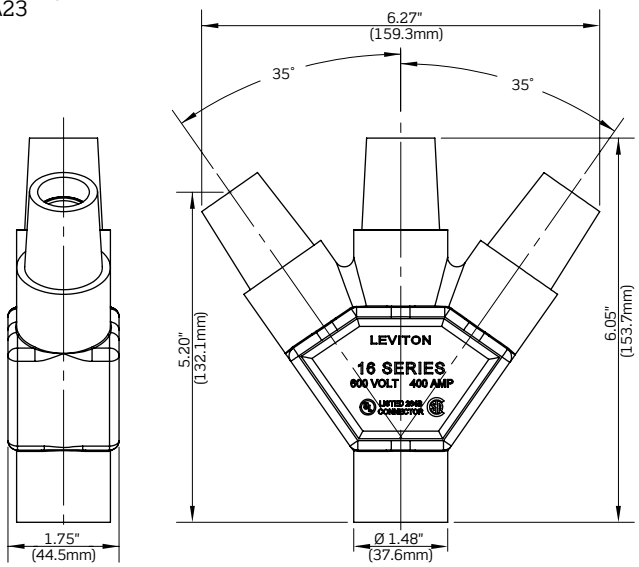

Reverse 3-Fer
Adapter 16A26

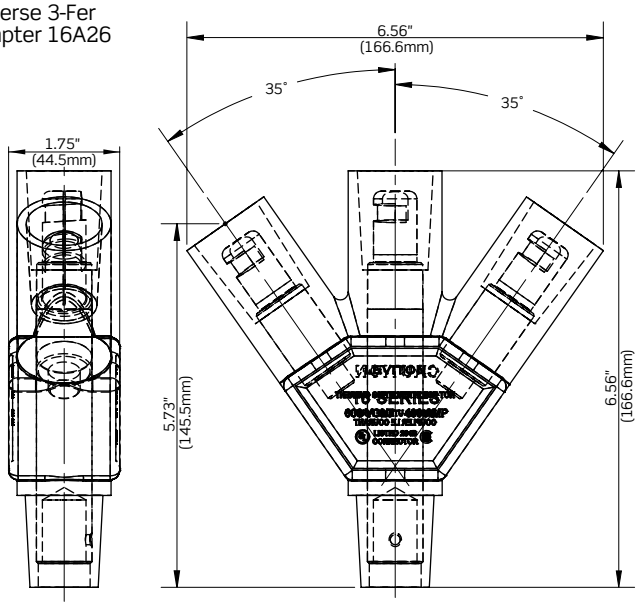

16 Series Devices

Typical for Assembled Paralleling Tee (F-M-M)

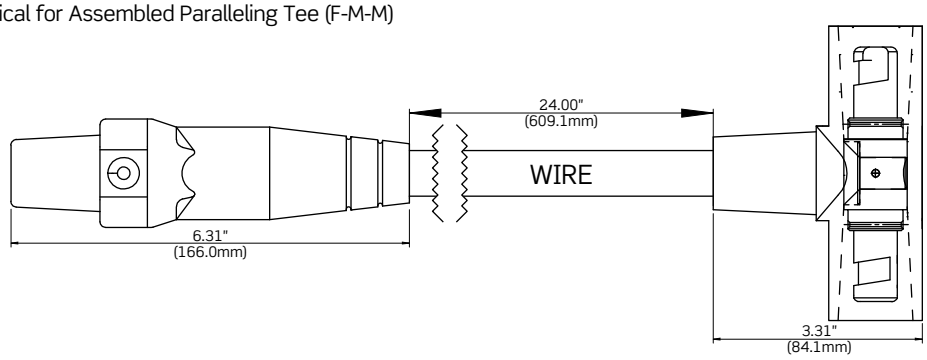

Typical for Assembled Tapping Tee (F-F-M)

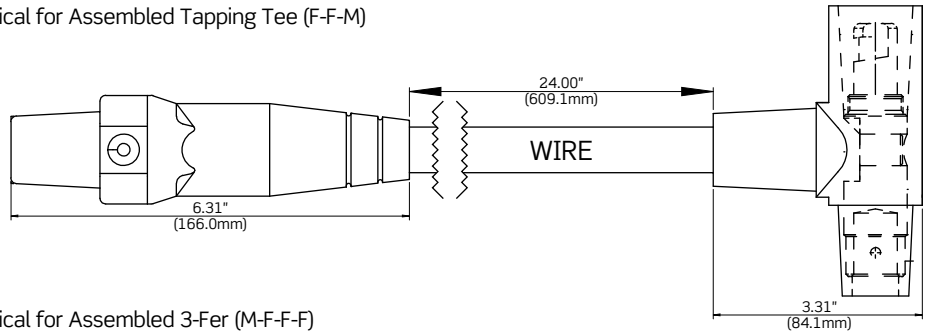

Typical for Assembled 3-Fer (M-F-F-F)

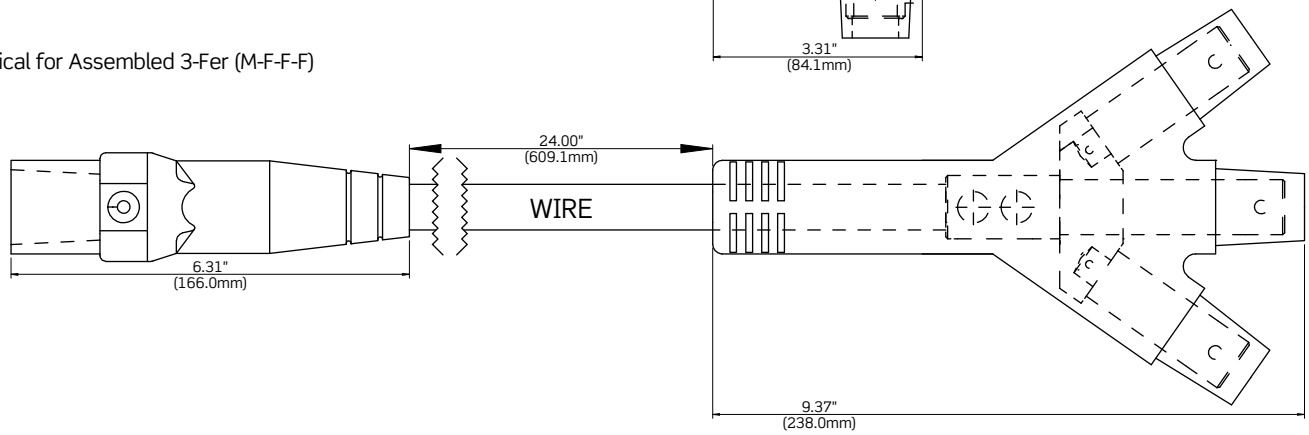

Dimensional Diagrams

18 Series Devices

Male Detachable Plug

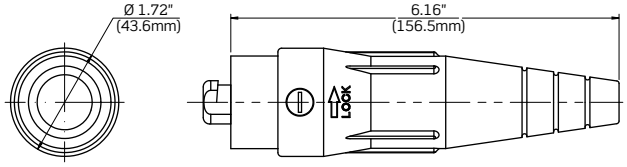

Female Detachable Plug

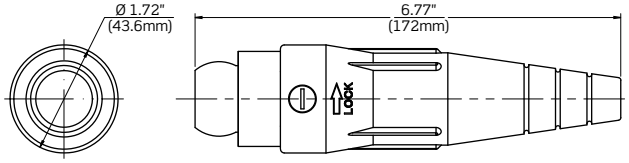

Typical Front for Male Panel Receptacle

Typical for Double Set Screw Termination

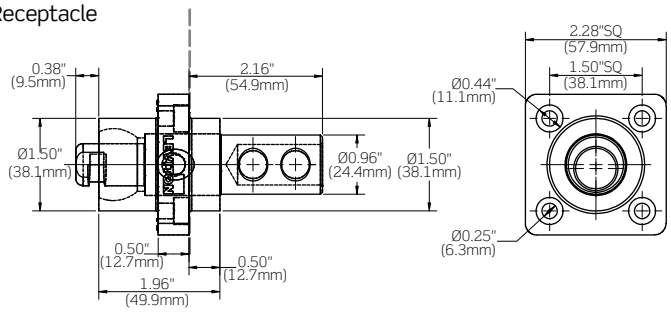

Typical Front for Female Panel Receptacle

Typical for Threaded Stud Termination

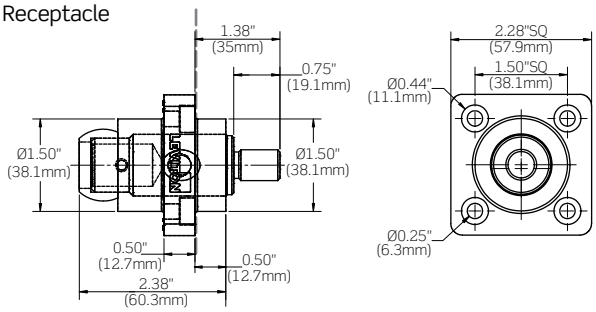

18F21 Female Terminal Connector - Bus Bar Mount, Angled

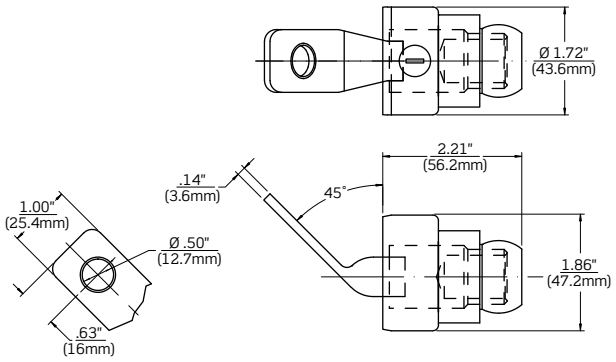

18F22 Female Terminal Connector - Bus Bar Mount, Offset

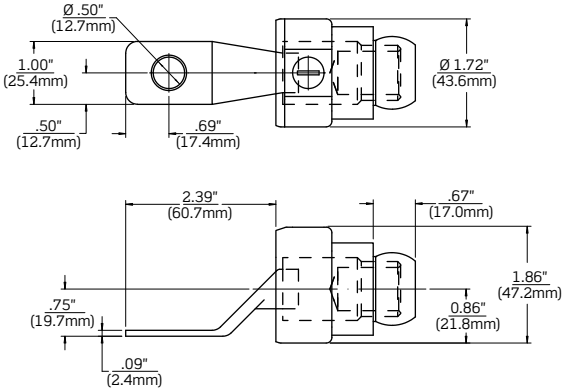

18P21 Male Protective Cap

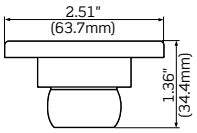

18P22 Female Protective Cap

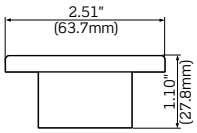

18 Series Devices

18A25 Double Male Adapter

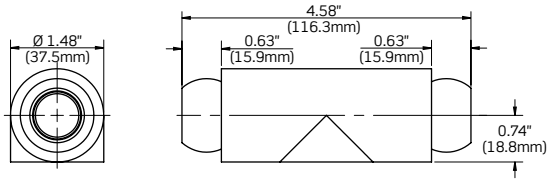

18A24 Double Female Adapter

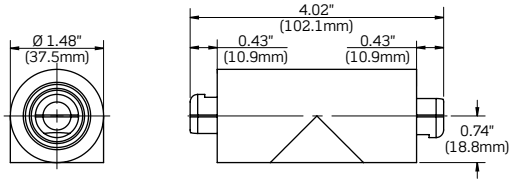

Paralleling Tee Adapter

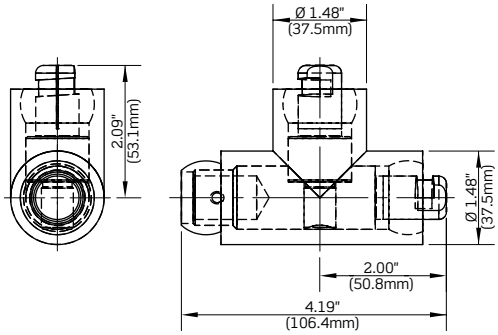

Tapping Tee Adapter

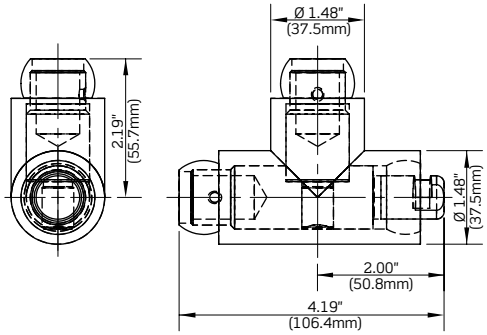

3-Fer Adapter

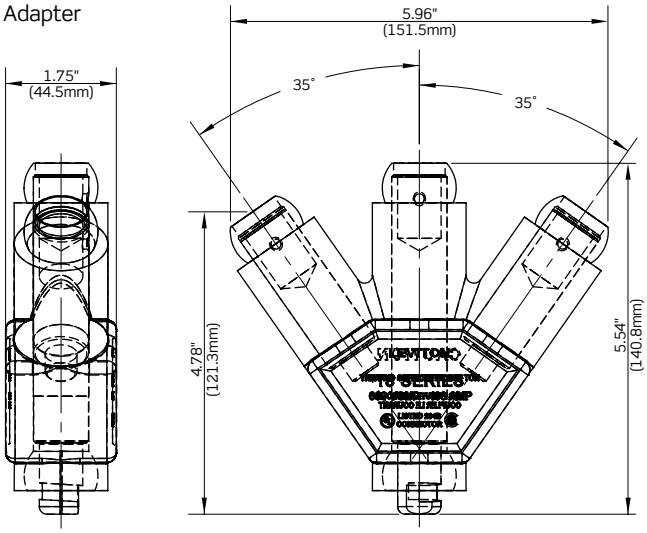

Also Available!

Rhino-Hide® NEMA Wiring Devices

Ideal for physically demanding environments that suffer from exposure to weather, chemicals, vibration, and physical strain

Common Applications

- Oil Drilling Rigs
- Mining Operations
- Shore Power
- Wind Power Turbines
- Construction Sites

Features & Benefits

- Submersible, watertight, and dust-tight for outdoor and other wet environments; rated to NEMA Enclosure Type 3R, 4, 4X, 6, 6P, 12, 13 and IP66/IP67/IP68/IP69K (high-pressure steam cleaning); ABS certified – suitable for marine environments
- Coated aluminum components provide superior corrosion resistance to bare aluminum, especially in salt-air environments, which extends service life of the device and facilitates easier installation and removal of threaded components
- Threaded connections make these devices ideal in high-vibration environments such as oil-drilling and mining operations
- Nickel-plated brass electrical contacts provide superior electrical performance and corrosion resistance for extended service life
- Devices are compatible with other manufacturers' devices as well as standard NEMA configured devices
- Available in seven voltage/amperage configurations

Visit our Website at:
www.leviton.com/rhinohide
email: industrial@leviton.com

Q-934E

Leviton Manufacturing Co., Inc.
201 N Service Rd, Melville, NY 11747
Telephone: 1-800-323-8920 • FAX: 1-800-832-9538
Tech Line (8:30AM-7:30PM E.S.T. Monday-Friday): 1-800-824-3005

© 2018 Leviton Manufacturing Co., Inc. All rights reserved. 080718

IADC MEMBER

ISO 9001 REGISTERED Quality Manufacturer