2015

$22

Supplemental and Obsolescence Digest 177

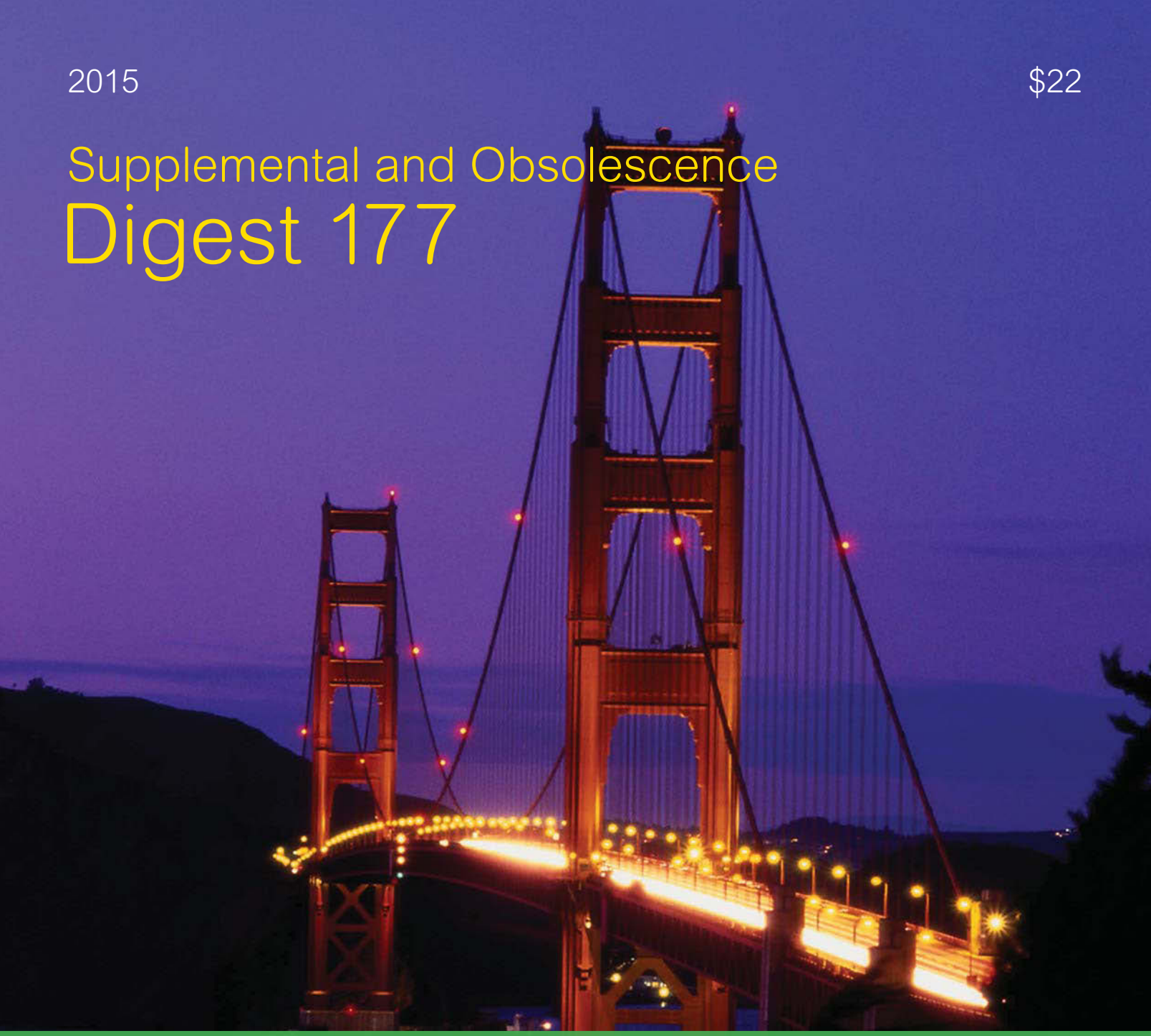

digestplus-us.schneider-electric.com

Life Is On | Schneider Electric

Schneider Electric brands that deliver the solutions you demand.

Square D power solutions – ready for the future.

Square D™ by Schneider Electric™ brand NEMA power and control solutions have been trusted over 100 years for performance, reliability, and energy-saving design. From residential load centers and metering products to commercial panelboards, energy conserving transformers, and safety switches, Square D brand products provide you with quality solutions for distributing and monitoring electrical power. It's more than an electrical system. It's the backbone of today's energy-demanding homes and businesses.

Taking lighting technology to a new level.

Juno™ by Schneider Electric is a leading manufacturer of energy-efficient commercial and residential lighting solutions and advanced system controls. Since 1976, we have been serving customers throughout North America, including electrical distributors, lighting showrooms, contractors, architects, engineers, lighting designers, and commercial establishments, offering them high-quality, innovative products, designed and engineered in the United States. The Juno Lighting Group product family includes over 50,000 items for commercial and residential construction, and includes a rapidly expanding line of eco-friendly LED fixtures for outdoor, recessed, track, decorative, and under-cabinet applications.

Delivering the best image quality in video security.

Pelco™ by Schneider Electric is a world leader in the design, development, and manufacture of video and security systems ideal for any industry. From megapixel cameras to video management and recording to display, Pelco solutions deliver the best image quality in video security.

> pelco.com

Committed to data center critical power and cooling.

APC™ by Schneider Electric is a global leader in critical power and cooling, providing industry-leading hardware, software, and services designed to ensure availability and higher energy efficiency across the residential, business network, data center, and manufacturing environments. The position of APC on the cutting edge of data center thought leadership for over two decades has changed the way the world designs, installs, operates, and maintains data centers. APC has unparalleled commitment to innovation and the world's leading R&D investment (more than $90 million annually) dedicated to critical power and cooling issues.

Telemecanique Sensors Simply easy™.

Founded over 90 years ago, Telemecanique Sensors is an independent brand of Schneider Electric, specializing in sensors and sensor-related technology.

Telemecanique Sensors is a global player, present in more than 20 countries, with products distributed worldwide through a broad network of partners.

As a global leader in the sensors business, we help our customers select the right technology to get the best performance and reliability from their machines.

Focused on three core values – Simplicity, Proximity, and Expertise – we have become experts in factory automation sensors as well as specialists in demanding applications, making our customers' lives "simply easy!"

© 2015 Schneider Electric. All Rights Reserved. Schneider Electric, Square D, Juno, Pelco, and APC are trademarks owned by Schneider Electric Industries SAS or its affiliated companies. All other trademarks are the property of their respective owners. • www.schneider-electric.com • 998-19128217_GMA-US

Schneider Electric
schneider-electric.us

Table of Contents

1 LOAD CENTERS 1-1
Class T Fusible Pullouts 1-2
Circuit Breaker Covers 1-2

2 HEAVY DUTY SAFETY SWITCHES AND ACCESSORIES 2-1
Phenolic Legend Plate 2-2
Push Button—Pilot Light—Selector Switch 2-2
Electrical Interlock Kits 2-2
Key Interlock Systems and Sample Applications 2-3

3 MOLDED CASE CIRCUIT BREAKERS AND ENCLOSURES 2-1
PowerPact™ Circuit Breakers 3-2
PowerPact H- and J-Frame Circuit Breakers 3-2
PowerPact L-Frame Circuit Breakers 3-4
PowerPact™ Automatic Switches 3-5
Molded Case Circuit Breakers 3-6
F-Frame Thermal-Magnetic Circuit Breakers 3-6
K- and Q4-Frame Thermal-Magnetic Circuit Breakers 3-8
L-Frame Thermal-Magnetic Circuit Breakers 3-9
Mag-Gard™ Motor Circuit Protector 3-10
GJ-Frame MCP Selection 3-11
Special Construction Circuit Breakers 3-13
Special Terminal Connectors and Lugs 3-13
Special Calibration and Accessories 3-14
Special Terminations 3-16
Grounded BØ Systems 3-17
UL Marine Listed Circuit Breakers 3-18
Circuit Breaker Accessories 3-19
PowerPact™ Circuit Breakers Electrical Accessories 3-19
Factory-Installed Accessories 3-20
Field-Installable Accessories 3-21
Electrical Operators, Handle Accessories and Walking Beam Interlocks 3-22
Locks, Installation Accessories, and Rear Connections 3-23
Mechanical Lug Information 3-24
Compression Lug and Power Distribution Connectors 3-25
Electronic Products 3-25
Restraint Interface Module 3-26
Circuit Breaker Dimensions 3-27
Enclosures 3-28
Enclosed Switches and Enclosure Dimensions 3-28
Accessories 3-29
Key Interlock Systems—Factory Installed Only 3-30

PANELBOARDS 4-1
Panelboards 4-2
General Information 4-2
General Instructions 4-2
Special Features 4-3
Mains and Branches 4-3
Mains 4-3
Branches 4-3
Cabinets 4-4
Special Features 4-4
NQ Merchandised Panelboards 4-7
NQ Main Lug and Main Circuit Breaker Panelboard with SPD 4-7
NQ Main Lug and Main Circuit Breaker Interiors with SPD—240 Vac, 48 Vdc 4-7
Ready-to-Install (RTI) Merchandise 4-8
Miscellaneous Panelboard Accessories 4-8
Copper Equipment Ground Bars 4-8
Field Installable I-Line™ Door Kits 4-8
Type 1 Door-in-Door (Hinged) Trim Fronts 4-9
Replacement Parts for Standard Panelboards 4-9
Trim Clamps and Screws 4-9
Trim Clamps and Screws 4-9
Locks and Keys 4-10
Locks [2]Panelboards that meet 1984 NEC® Wire Bending Space are Series E1. 4-10
Keys 4-10
CTC Cabinets 4-11
Wall Mounted Metering Equipment 4-11
Main Circuit Breaker and Current Transformer Compartment 4-11
Retrofit Information 4-12
Retrofit Existing Enclosure Data Sheet 4-12
Data Sheet for Panelboards to Retrofit Existing Enclosures 4-12

5 SWITCHBOARDS 5-1
Power-Style™ Commercial Multi-Metering (CMM) Switchboards 5-2
Replacement Parts 5-2
Meter Sockets, Covers, Hardware Kits 5-2
Tenant Main Disconnects 5-3
Class T Fusible Pullouts, CMM Pullout Heads 5-3
Speed-D™ Switchboards 5-4
Service Selection 5-4
Merchandised Speed-D Switchboards 5-4

© 2017 Schneider Electric
All Rights Reserved
2/15/2017

6 TRANSFORMERS 6-1
Miscellaneous 6-1
General Purpose Dry Type 600 Volts and Below 6-3
K-Rated Transformers 6-3
Drive Isolation Transformers 6-5
Open Core and Coil Transformers 6-6
Industrial Control 6-7
Type EO Transformers 6-7
Type T and MultiTap Transformers 6-7
Instrument 600 Volt Class 6-8
Voltage and Current Transformers 6-9
Toroidal Current Transformers 6-10
Toroidal Current Transformers (64R, 74R, 66R, 76R) 6-10
Toroidal Current Transformers (110R, 110R, 120R, 140R) 6-10
Toroidal Current Transformers (152R, 170R, 180R, 210R) 6-11
Toroidal Current Transformers (200R, 201R, 202R, 203R) 6-12
Shorting Terminal Blocks 6-12
Current Transformers: Multi-Ratio, Rectangular, Split-Core 6-12
Multi-Ratio Current Transformers 6-12
Rectangular Window Current Transformers 6-13
Split-Core Current Transformers 6-13
Current Transformers: Bushing, Auxiliary 6-14
Bushing Current Transformers 50–400 Hz 6-14
Auxiliary Current Transformers 6-14
Transformers—Obsolete 6-15
Obsolete—January 1, 2016Energy Efficient Three-Phase 6-15
Obsolete—January 1, 2016EE Watchdog Transformers 6-16
Obsolete—January 1, 2016EE NL and NLP Series Transformers 6-17

7 INTERNATIONAL LOAD CENTERS 7-1
International Miniature Circuit Breakers 7-2
QO™ Plug-On and Bolt-On Circuit Breakers and Switches 7-2
Plug-On QOXD and Bolt-On QOBXD 7-3
Load Centers 7-4
IEC Certified QO™ Load Centers, Type 1 (Indoor) 7-4

8 INTERNATIONAL SAFETY SWITCHES 8-1
General Duty Safety Switches 8-2
CSA Certified General Duty—Fusible 240 Vac 8-2
Heavy Duty Safety Switches 8-3
CSA Certified Heavy Duty—Fusible 240 Vac 8-3
CSA Certified Heavy Duty—Fusible 600 Vac 8-3
CSA Certified Heavy Duty—Special Applications 8-4
Double-Throw Safety Switches 8-5
CSA Certified Double-Throw 8-5
CSA Certified Switch Accessories 8-6

9 INTERNATIONAL CIRCUIT BREAKERS 9-1
Thermal-Magnetic Circuit Breakers 9-2
SF and SL Circuit Breakers, IEC Rated 415/240 Vac Max 9-2
Electronic Trip Circuit Breakers 9-3
P-frame, 3P, Micrologic™ Electronic-Trip Unit, IEC Rated 9-3
R-frame, 3P, Micrologic™ Electronic-Trip Unit, IEC Rated 9-4
P-frame, 4P, Micrologic™ Electronic-Trip Unit, IEC Rated 9-5
R-frame, 4P, Micrologic™ Electronic-Trip Unit, IEC Rated 9-6
Breaking Capacities 9-7
Circuit Breaker Dimensions 9-8

10 INTERNATIONAL PANELBOARDS 10-1
NQX Panelboards 10-2
Factory Assembled Circuit Breaker Panelboard 10-2

11 OBSOLESCENT AND OBSOLETE CIRCUIT BREAKERS 11-1
Obsolescent and Obsolete Types 11-2
Circuit Breaker Availability 11-2
Pictorial and Dimensions 11-4
Obsolescent Circuit Breakers 11-6
PowerPact™ D-Frame Circuit Breakers 11-6
Photovoltaic Circuit Breakers and Switches 11-7
F-Frame Thermal-Magnetic Circuit Breakers 11-11
K-Frame Thermal-Magnetic Circuit Breakers 11-12
L-Frame Thermal-Magnetic Circuit Breakers 11-13
L-Frame Micrologic™ Series B Trip Circuit Breakers 11-14
Mission Critical Circuit Breakers 11-17
500 Vdc Circuit Breakers 11-18
P-Frame Replacement Handles, Adapter Plate and Exchange Program 11-19
Automatic Molded-Case Switches 11-20
Mag-Gard™ Motor Circuit Protector 11-21
UL Listed Marine Circuit Breakers 11-23
Circuit Breakers for NQO, NQOB, NQOD and ML Panelboards 11-24
Rating Plugs For Obsolete Electronic Trip Circuit Breakers 11-25
EH/EHB Circuit Breakers 11-26

© 2017 Schneider Electric
All Rights Reserved

FJA Thermal-Magnetic Circuit Breakers 11-27
QE Metering Circuit Breakers 11-28
KD/KG Thermal-Magnetic Circuit Breakers 11-29
NHL Thermal-Magnetic Molded Case Circuit Breaker 11-30
Molded Case Circuit Breakers 11-31
M-Frame Thermal-Magnetic Circuit Breakers 11-31
Circuit Breaker Accessories 11-32
Circuit Breakers Electrical Accessories 11-32
PowerPact™ Circuit Breakers Miscellaneous Accessories 11-33
Neutral CTs and Micrologic™ Series B Trip Unit Accessories 11-35
Field-Installable Accessories 11-36
Electrical Operators and Handle Accessories 11-37
Lug Information 11-38
Electronic Products 11-41
Micrologic™ Series 2/3/A/B Trip Unit Test Sets 11-41
Ground-Fault Protection 11-42
Micrologic™ Add-On Ground-Fault Module (GFM) 11-42
Obsolescent Circuit Breakers 11-43
Masterpact™ M/MP/MC Circuit Breakers, UL 489/1066 Listed 11-43
Masterpact™ M/MP/MC Circuit Breaker Control Units 11-44
Masterpact™ M/MP/MC Circuit Breaker Accessories 11-45
Masterpact™ M/MP/MC Circuit Breaker Spare Parts 11-47

12 OBSOLETE MOTOR CONTROL CENTERS 12-1
Model 4 12-2
Branch Feeder Units 12-2
Circuit Breaker Type Combination Starters 12-3
Fusible Switch Combination Starter Units 12-4
Series 5600 12-5
General Information 12-5
Branch Feeder and Circuit Breaker Type Combination Starter Units 12-6

13 OBSOLESCENT PANELBOARDS 13-1
QMB Fusible Panelboards 13-2
Ready-to-Install (RTI)—600 Vac, 250 Vdc 13-2
QMB Main Lugs and Main Switch Interiors and Accessories 13-2
QMB Layout Information 13-2
Main Switch Replacement Units 13-2
Main Switch Replacement Units 13-2
Branch Switch Replacement 13-3
Guidelines 13-3
Obsolescent Branch Switch Replacement Units 13-4
30–200 A Obsolescent Switch Units—Series D2 13-4
Series E1 Motor Starter Replacement Units 13-4
Application 13-4
Starters 13-5
Selection of Components 13-6
Starter Data 13-6
Accessories 13-6
Replacement Parts 13-6
Trim Clamps and Screws; Circuit I.D. Numbers; Locks 13-6
Trim Clamps and Screws, Circuit I.D. Numbers, Locks 13-6
NQOD Lighting and Appliance Panelboards 13-6
Series Ratings 13-6
Pricing Procedure Examples 13-8
NQOD Merchandised Pricing Procedure 13-8
NQOD 20–inch Wide Main Lug Interiors and NQOD Accessories 13-9
NQOD 20–inch Wide Main Circuit Breaker Interiors and Adapter Kits 13-10
NQOD 14–inch Wide Main Lug and Circuit Breaker Interiors 13-10
For Non-Linear Loads (200% Rated Neutral) 13-11
Terminal Data 13-12
I-Line Merchandised Panelboards 13-13
I-Line HCN 13-13
Circuit Breakers for I-Line Panelboards and Switchboards 13-14
2 KI, 2 LC, and LI Breakers 13-14

14 I-LINE™ BUSWAY 14-1
I-Line™ Busway 14-2
Special Purpose Plug-In Units 14-2
APD and SD Busway Plug-In Units (Not I-Line™ Busway) 14-2
Capacitor and Transformer Units 14-2
Combination Switches and Contactors (For I-Line Busway) 14-2
Ground Indicator and Neutralizer Plugs 14-2
Powerbus™ Busway 14-3
Powerbus™ Busway 14-3
Powerbus 225 (240 V) Ampere 14-3
Powerbus 100 (600 V) Ampere 14-3
Busbar Configurations 14-4

© 2017 Schneider Electric
All Rights Reserved
2/15/2017

15 OPERATING MECHANISMS AND DISCONNECT SWITCHES 15-1
IEC Style Disconnect Switches 15-2
GS1 Fusible and LK3 Nonfusible, UL98 Tested 15-2
Catalog Number Identification System 15-2
Handles 15-3
Accessories 15-4
Dimensions ..... 15-5 – 15-7
UL508 Motor Disconnect Switches 15-8
Mini-Vario and Vario™ Switches 15-8
NEMA Style Disconnect Switches 15-9
File D10 15-9
Door-Mounted Operating Mechanisms 15-10
Type L Circuit breaker Mechanisms 15-10
Dimensions ..... 15-11 – 15-12
Bracket-Mounted Disconnect Devices 15-13
Type T Disconnect Switches 15-13
Flexible Cable Mechanisms 15-14
For Use with Type GJL Circuit Breakers 15-14
Disconnect Switch Accessories 15-15
Variable-Depth Mechanisms 15-15
Remote or Dual Adapter Kit 15-16

16 CONTACTORS AND STARTERS 16-1
Reversing Drum Switches 16-2
Type A and B NEMA 1, 3R, 4, and 13 Without Overload 16-2
Electromechanical Reduced Voltage Starters 16-3
Reduced Voltage Starting of Squirrel Cage Motors 16-3
Electromechanical Reduced Voltage Starters 16-3
Specifications 16-3
Autotransformer Starter Selection, 3-Pole Polyphase 16-4
Wye-Delta Starter (Open Transition) Selection, 3-Pole Polyphase 16-5
Wye-Delta Starter (Closed Transition) Selection, 3-Pole Polyphase 16-6
Part Winding Starter Selection 16-7
Dimensions 16-8
Multi-speed Magnetic Starters 16-9
Application Data 16-9
Special Relays for Non-Reversing and Reversing Multi-speed Starters 16-9
3-Pole Polyphase, 600 Vac Maximum, 50–60 Hz 16-10
Two-Speed Combination Starters 3-Pole Polyphase 16-11
Reversing Two-Speed Combination Starters 3-Pole Polyphase 16-12
Dimensions ..... 16-13 – 16-14
Lighting Contactors 16-15
Panelboard Lighting Contactors, Type PB 16-15
Dimensions 16-15
Well-Guard™ Pump Panel 16-16
Reduced Voltage Type 16-16
Dimensions ..... 16-16 – 16-17
Factory Modifications (Forms) 16-18
Reduced Voltage Starters 16-18
Selection of Control Circuit Transformers 16-18
Class 8606 Reduced Voltage Starters 16-19
Class 8640 Reduced Voltage Starters 16-20
Definite Purpose Contactors 16-21
Reversing/Hoist, Type R 16-21
Selection—AC Reversing/Hoist Contactors 16-21
Thermal Overload Relays—NEMA Style 16-22
Solid-State Overload Relay, Motor Logic™ Plus 16-22
Lug-Lug Kit 16-22
Communication Module 16-22
How to Order 16-22

© 2017 Schneider Electric
All Rights Reserved

Section 1

Load Centers

Fusible Pullouts and Circuit Breaker Covers 1-2

Class T Fusible Pullouts 1-2
Circuit Breaker Covers 1-2

© 2017 Schneider Electric
All Rights Reserved

FTL2200

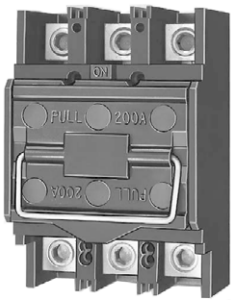

FTL3200

Class T Fusible Pullouts

- 2- or 3-pole fusible pullouts
- 200 A maximum 300 V Class T fuses (not included)
- 1Ø3W 120/240 V
  1Ø2W 240 V
- 3Ø3W 240 V delta
  3Ø4W 240/120 V delta
  3Ø4W 208Y/120 V
- UL Listed 100 kA short circuit current rating

Table 1.1: Fusible Pullouts

Mains		Cat. No.		Main Wire Size AWG/kcmil	Fuse Pullout Only
System	Rating	Two Pole	Three Pole		
1Ø3W 120/240 V 1Ø2W 240 V	100 A	FTL2100 [1]	—	4–250 Al/Cu	4050704950 [1]
	200 A	FTL2200 [1]	—		4050703850 [1]
3Ø3W 240 V delta 3Ø4W 240/120 V delta 3Ø4W 208Y/120 V	100 A	—	FTL3100		4050707050 [1]
	200 A	—	FTL3200		4050705950 [1]

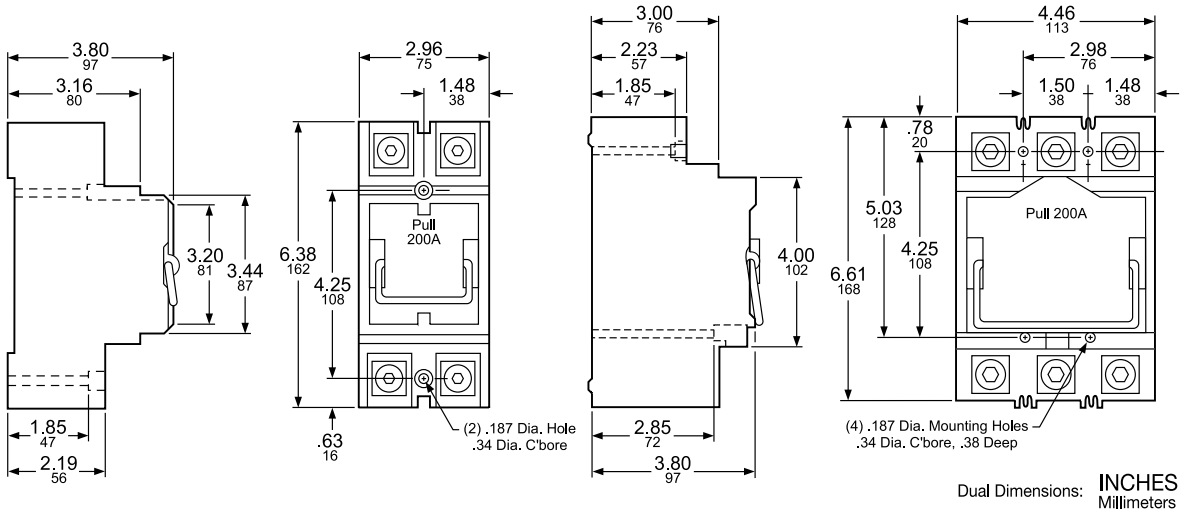

Circuit Breaker Covers

Table 1.2: Covers

Quantity	Cat. No.
1	BCH
1	BCV

Available now from Square D™ / Schneider Electric™ are two different versions of rainproof circuit breaker covers which are UL component recognized as being suitable for use as circuit breaker handle covers.

They are constructed of durable impact-resistant material and are intended for use by OEMs where a rainproof cover is needed (e.g. on heat pumps and air conditioners with built-in disconnects). Both models have a built-in latch with padlock provisions.

The BCH covers are for use on a horizontally-mounted circuit breaker and fit over Square D two-pole QO™, QOU, Q2, EH and three-pole Q2 and EH circuit breakers.

The BCV covers are for use on vertically-mounted circuit breakers and will fit over Square D two- and three-pole QO, QOU, Q2, EH, FA and KA circuit breakers.

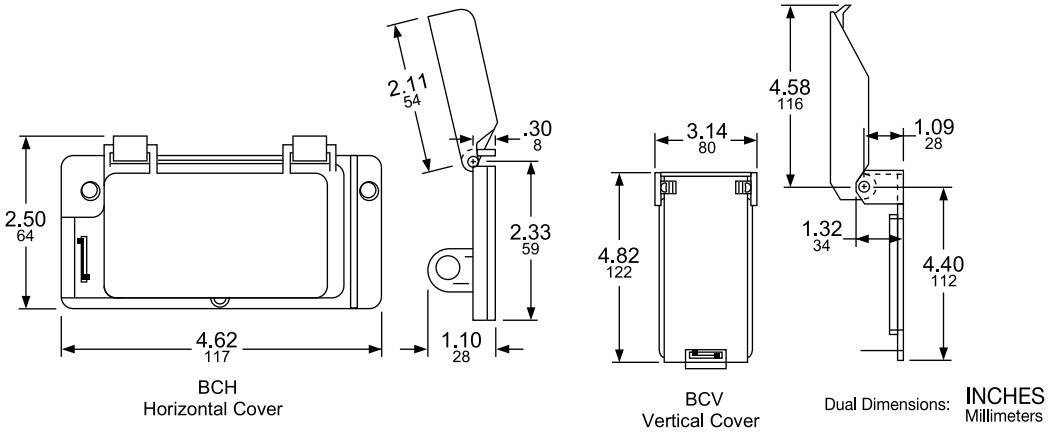

BCH
Horizontal Cover

BCV
Vertical Cover

[1] Not stocked in PDS. Order point Lexington.

© 2017 Schneider Electric
All Rights Reserved
2/15/2017

Section 2

Safety Switches

Heavy Duty Safety Switches and Accessories 2-1

Phenolic Legend Plate 2-2
Push Button—Pilot Light—Selector Switch 2-2
Electrical Interlock Kits 2-2
Key Interlock Systems and Sample Applications 2-3

© 2017 Schneider Electric
All Rights Reserved

Phenolic Legend Plate

Available engraved and mounted on heavy duty safety switches [1]. Legend engraved in 1/4 in. high white letters on black background. Customer must provide legend. UL Listed.

To order, add suffix NP to standard Cat. No. Example: H363NP

Push Button—Pilot Light—Selector Switch

Push buttons, pilot lights or selector switches are available factory-installed in the cover of NEMA 1, 3R, 4, 4X, or 5 stainless steel or NEMA 12 heavy duty safety switches and double throw switches [2]. Wiring to contact blocks is not available. Customer must furnish catalog number of push button, pilot light or selector switch device desired. UL Listed.

Contact Schneider Electric for catalog number and availability prior to quoting a job.

For enclosure sizing, 30 and 60 amperes switches will be in 100 ampere enclosures.

Electrical Interlock Kits

Electrical interlocks for heavy duty 30–1200 A safety switches are available factory-installed or in kit form for field installation. Each kit contains instructions for proper field mounting. A pivot arm operates from switch mechanism, breaking the control circuit before the main switch blades break. Switches with electrical interlocks installed are UL Listed. For factory-installed electrical interlocks add EI (for one contact) or EI2 (for two contacts) suffix to catalog number.

Table 2.1: Electrical Interlock Kit [3] [4]

Switch Amperes Rating	Series Number[5]	Electrical Interlock Kit Cat. No. [6]
30	F5–F6	EIK031 EIK032
60 (600 V)	F5–F6	EIK1 EIK2
60 (240 V)	F5–F6	EIK031 EIK032
100–200	F5–F6	EIK1 EIK2
30–100 Receptable Switches	F5–F7	EIK1 EIK2
30–200 4 and 6 Pole Switches	F5–F6	EIK1 EIK2
400–1200	E4–E5	EIK40601 EIK40602

Table 2.2: Electrical Interlock Contact Ratings [7]

Interlock Type	AC - 50 or 60 Hz				DC		
	Volts	Make	Break	Cont.	Volts	Make & Break	Cont.
Cat. no. ending with a 1 utilize a 9007A01 limit switch.							
1 NO/1 NC Contact	120	40 A	15 A	15 A	115	0.50 A	15 A
	240	20 A	10 A	15 A	230	0.25 A	15 A
	480	10 A	6 A	15 A	—	—	—
	600	8 A	5 A	15 A	600	0.05 A	15 A
Cat. no. ending with a 2 utilize a 9007C03 limit switch.							
2 NO/2 NC Contacts	120	30 A	3.0 A	10 A	115	1.0 A	10 A
	240	15 A	1.5 A	10 A	230	0.30 A	10 A
	480	7.5 A	0.75 A	10 A	—	—	—
	600	6.0 A	0.60 A	10 A	600	0.10 A	10 A

[1] Except NEMA 7 and 9 switches.
[2] Not UL listed for 600 A double throw safety switch.
[3] For series not shown in table refer to the switch wiring diagram.
[4] Electrical interlocks for Type 4X fiberblass reinforced polyester and Krydon™ see Digest Section 3.
[5] See Digest Section 3 for safety switch series.
[6] Electrical interlock kit catalog numbers ending in 1 indicates one normally open and one normally closed contact. These kits use a 9007A01 industrial snap switch. Electrical interlock kit catalog numbers ending in 2 indicates two normally open and two normally closed contacts. These kits use a 9007C03 industrial snap switch.
[7] Single pole single throw interlock kits are rated 1/2 hp @ 110 and 220 Vac.

© 2017 Schneider Electric
All Rights Reserved

Key Interlock Systems and Sample Applications

Factory-installed only on heavy duty and double throw safety switches.

Interlocks are used to prevent the operator from making an unauthorized operation. Not available on hazardous location devices (NEMA 7/9) or fiberglass reinforced polyester (NEMA 4X).

The key interlock system is a simple and easy method of applying individual key interlock units and assemblies to the above equipment so as to require operation in a predetermined sequence. UL Listed.

Quoting: Contact Schneider Electric for catalog number, availability and pricing prior to quoting a job.

Ordering: Order cannot be released for production until the following information has been provided:

- End User—Company name, address
- Function of each lock (e.g., switch to be locked open with key removed, key held when switch is closed)
- Existing Equipment—if switch is to be interlocked with equipment already on site, provide brand of existing lock and key number
- Other New Equipment—if switch is to be interlocked with new equipment not yet installed at the site, then provide contact person and phone number so that locks may be coordinated
- Additional information may be required upon order entry

Use these suffixes on switch catalog numbers:

- KI = 1 lock per switch
- KI2 = 1 lock with 2 cylinders per switch
- KIKI = 2 separate locks per switch

© 2017 Schneider Electric
All Rights Reserved

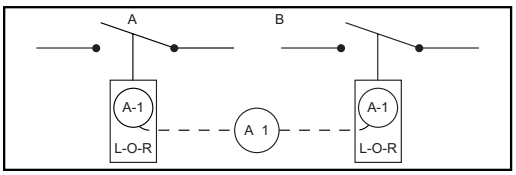

Figure 1

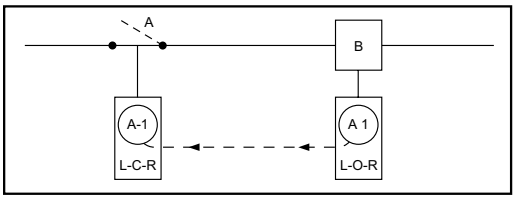

Figure 2

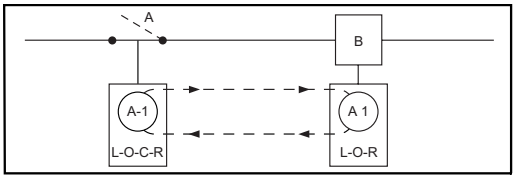

Figure 3

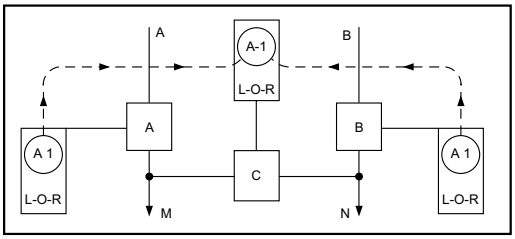

Figure 4

Key Interlock Sample Applications

Sample Application—1 (see Figure 1)

To prevent two devices from being closed simultaneously.

Two devices are shown in Figure 1. In operation they are not closed at the same time. With the interlocks arranged as shown only one key is required in the interlocking system. Both devices are shown open, therefore, the key is free. To close any one device the key is inserted and turned in that particular lock, the key is held in this lock until the device is again locked open. This simple interlocking sequence lends itself to a multitude of applications. The procedure is the same for two devices, neither of which is to be opened at the same time.

Sample Application—2 (see Figure 2)

To prevent opening of switch A when circuit breaker B is closed.

Switch A and circuit breaker B are in closed position. Key A-1 is held in circuit breaker B interlock.

- Open circuit breaker.
- Turn key A-1 in L-O-R interlock on circuit breaker B to lock open. Key A-1 is now free.
- Insert key A-1 in L-C-R interlock on switch A and turn to unlock.
- Open switch A. Key A-1 is now held. Reverse sequence to restore service.

Sample Application—3 (see Figure 3)

To prevent operation of switch A when circuit breaker B is closed. Permits re-closing of circuit breaker for servicing when switch is locked open.

Switch A and circuit breaker B are in closed position. Key A-1 is held in circuit breaker interlock.

- Open circuit breaker.
- Turn key A-1 in L-O-R interlock on circuit breaker B to lock open. Key A-1 is now free.
- Insert key A-1 in L-O-C-R interlock on switch A and turn to unlock.
- Open switch A.
- Turn key A-1 in L-O-C-R interlock on switch A to lock open. Key A-1 is now free.
- Return key A-1 to circuit breaker interlock and unlock for operation during servicing period.

Reverse sequence to restore service.

Sample Application—4 (Main-Tie-Main) (See Figure 4)

To prevent paralleling of lines A and B; two loads, fed from either source.

Circuit breaker A is closed to supply load M. Circuit breaker B is closed to supply load N. Tie-circuit breaker C is open. Keys A-1 are held in interlocks on both circuit breakers A and B. Tie-circuit breaker C cannot be closed unless either A or B is locked open.

To transfer load N to circuit breaker A, proceed as follows:

- Open circuit breaker B.
- Turn key A-1 in L-O-R interlock on circuit breaker B to lock open. Key A-1 is now free.
- Insert Key A-1 in L-O-R interlock on tie-circuit breaker C and turn to unlock. Key A-1 is now held.
- Close tie-circuit breaker C.
- Reverse sequence to restore service.
- Load M can be supplied through circuit breaker B in a similar manner.

Locking Position—Designations

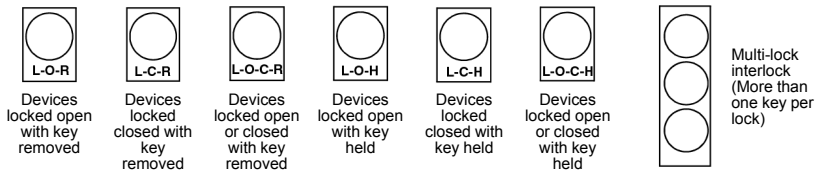

Diagram Symbols

NOTE:
Device locked open = switch in OFF (O) position
Device locked closed = switch in ON (I) position

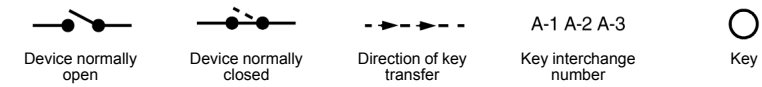

© 2017 Schneider Electric
All Rights Reserved

Section 3

Molded Case Circuit Breakers and Enclosures

PowerPact™ Circuit Breakers 3-2

PowerPact H- and J-Frame Circuit Breakers 3-2
PowerPact L-Frame Circuit Breakers 3-4

PowerPact™ Automatic Switches 3-5

500 Vdc Circuit Breakers 3-6

UL Listed 500 Vdc Circuit Breakers 3-6

Molded Case Circuit Breakers 3-7

F-Frame Thermal-Magnetic Circuit Breakers 3-7
K- and Q4-Frame Thermal-Magnetic Circuit Breakers 3-9
L-Frame Thermal-Magnetic Circuit Breakers 3-10
Mag-Gard™ Motor Circuit Protector 3-11
GJ-Frame MCP Selection 3-12

Special Construction Circuit Breakers 3-14

Special Terminal Connectors and Lugs 3-14
Special Calibration and Accessories 3-15
P-Frame Replacement Handles, Adapter Plate and Exchange Program 3-17
Special Terminations 3-17
Grounded BØ Systems 3-19
UL Marine Listed Circuit Breakers 3-20

Circuit Breaker Accessories 3-21

PowerPact™ Circuit Breakers Electrical Accessories 3-21
Factory-Installed Accessories 3-22
Field-Installable Accessories 3-23
Electrical Operators, Handle Accessories and Walking Beam Interlocks 3-24
Locks, Installation Accessories, and Rear Connections 3-25
Mechanical Lug Information 3-26
Compression Lug and Power Distribution Connectors 3-27

Electronic Products 3-27

Restraint Interface Module 3-28

Circuit Breaker Dimensions 3-29

3-29

Enclosures 3-30

Enclosed Motor-Operated Circuit Breakers 3-30
Enclosed Switches and Enclosure Dimensions 3-31
Accessories 3-32
Key Interlock Systems—Factory Installed Only 3-33

© 2017 Schneider Electric
All Rights Reserved

PowerPact H- and J-Frame Circuit Breakers

Table 3.1: H-Frame 150 A UL Current-Limiting [1] Circuit Breaker Frame with Field-Interchangeable Thermal-Magnetic Trip Units [2] (600 Vac, 250 Vdc)

Ampere Rating	Fixed AC Magnetic Trip		Cat. No.				Terminal Wire Range
	Hold	Trip	D Interrupting	G Interrupting	J Interrupting [1]	L Interrupting [1]	
3P, 600 Vac 50/60 Hz							
15 A	350 A	750 A	HDL36015T	HGL36015T	HJL36015T	HLL36015T	AL150HD 14–3/0 AWG Al or Cu
20 A	350 A	750 A	HDL36020T	HGL36020T	HJL36020T	HLL36020T	
25 A	350 A	750 A	HDL36025T	HGL36025T	HJL36025T	HLL36025T	
30 A	350 A	750 A	HDL36030T	HGL36030T	HJL36030T	HLL36030T	
35 A	400 A	850 A	HDL36035T	HGL36035T	HJL36035T	HLL36035T	
40 A	400 A	850 A	HDL36040T	HGL36040T	HJL36040T	HLL36040T	
45 A	400 A	850 A	HDL36045T	HGL36045T	HJL36045T	HLL36045T	
50 A	400 A	850 A	HDL36050T	HGL36050T	HJL36050T	HLL36050T	
60 A	800 A	1450 A	HDL36060T	HGL36060T	HJL36060T	HLL36060T	
70 A	800 A	1450 A	HDL36070T	HGL36070T	HJL36070T	HLL36070T	
80 A	800 A	1450 A	HDL36080T	HGL36080T	HJL36080T	HLL36080T	
90 A	800 A	1450 A	HDL36090T	HGL36090T	HJL36090T	HLL36090T	
100 A	900 A	1700 A	HDL36100T	HGL36100T	HJL36100T	HLL36100T	
110 A	900 A	1700 A	HDL36110T	HGL36110T	HJL36110T	HLL36110T	
125 A	900 A	1700 A	HDL36125T	HGL36125T	HJL36125T	HLL36125T	
150 A	900 A	1700 A	HDL36150T	HGL36150T	HJL36150T	HLL36150T	

Table 3.2: J-Frame 250 A UL Current-Limiting [1] Circuit Breaker Frame with Field-Interchangeable Thermal-Magnetic Trip Units [2] (600 Vac, 250 Vdc)

Ampere Rating	Adjustable AC Magnetic Trip		Cat. No.				Terminal Wire Range
	Low	High	D Interrupting	G Interrupting	J Interrupting [1]	L Interrupting [1]	
3P, 600 Vac 50/60 Hz							
150 A	750 A	1500 A	JDL36150T	JGL36150T	JJL36150T	JLL36150T	AL175JD 4–4/0 AWG Al or Cu
175 A	875 A	1750 A	JDL36175T	JGL36175T	JJL36175T	JLL36175T	
200 A	1000 A	2000 A	JDL36200T	JGL36200T	JJL36200T	JLL36200T	AL250JD 3/0 AWG–350 kcmil Al or Cu
225 A	1125 A	2250 A	JDL36225T	JGL36225T	JJL36225T	JLL36225T	
250 A	1250 A	2500 A	JDL36250T	JGL36250T	JJL36250T	JLL36250T	

Table 3.3: H-Frame 150A and J-Frame 250 A 3P Basic UL Current-Limiting [1] Circuit Breaker Frame Without Terminations [3] or Trip Unit (600 Vac, 250 Vdc)

Circuit Breaker Frame	Ampere Rating	Cat. No.			
		D Interrupting	G Interrupting	J Interrupting [1]	L Interrupting [1]
H-Frame	15–60 A	HDF36000F06	HGF36000F06	HJF36000F06	HLF36000F06
	70–150 A	HDF36000F15	HGF36000F15	HJF36000F15	HLF36000F15
J-Frame	150–250 A	JDF36000F25	JGF36000F25	JJF36000F25	JLF36000F25

H-Frame and Trip Unit

Table 3.4: H-Frame and J-Frame 3P Field-Installable Thermal-Magnetic Trip Unit

15–60 A H-Frame		70–150 A H-Frame		150–250 A J-Frame	
Amperage	Cat. No.	Amperage	Cat. No.	Amperage	Cat. No.
15 A	HT3015	70 A	HT3070	150 A	JT3150
20 A	HT3020	80 A	HT3080	175 A	JT3175
25 A	HT3025	90 A	HT3090	200 A	JT3200
30 A	HT3030	100 A	HT3100	225 A	JT3225
35 A	HT3035	110 A	HT3110	250 A	JT3250
40 A	HT3040	125 A	HT3125	—	—
45 A	HT3045	150 A	HT3150	—	—
50 A	HT3050	—	—	—	—
60 A	HT3060	—	—	—	—

Table 3.5: H- and J-Frame Interrupting Ratings

Voltage	Interrupting Rating			
	D	G	J	L
240 Vac	25 KA	65 kA	100 kA	125 kA
480 Vac	18 kA	35 kA	65 kA	100 kA
600 Vac	14 kA	18 kA	25 kA	50 kA

Table 3.6: H- and J-Frame Termination Options

Termination Letter
A - I-Line (See Section 9)
F = No Lugs (includes terminal nut kit on both ends)[4]
L = Lugs both ends
M = Lugs ON end Terminal Nut Kit OFF end
P = Lugs OFF end Terminal Nut Kit ON end
N = Plug-in
D = Drawout
S = Rear Connected
For factory-installed termination, place termination letter in the third block of the circuit breaker catalog number. H D **L** 3 6 0 1 5 T

Accessories see Digest Section 7
Optional Lugs see Digest Section 7
Dimensions see Digest Section 7
Enclosures see Digest Section 7

[1] J and L interrupts are UL Certified as current limiting.
[2] Circuit breakers will be labeled with Line and Load markings and are not suitable for reverse connections. Only available on standard (80%) rated 3P unit-mount circuit breakers; not available with I-Line™ or Plug-In constructions.
[3] See Digest Section 7 for lug and termination kits.
[4] Add TS suffix for circuit breaker without terminal nut kit.

© 2017 Schneider Electric
All Rights Reserved

PowerPact H- and J-Frame Circuit Breakers

Table 3.7: H-Frame 150 A and J-Frame 250 A Current-Limiting [5] Circuit Breakers with Lugs and Field-Interchangeable Electronic Trip Units (600 Vac, 50/60 Hz, 3P) [6]

Electronic Trip Unit			Sensor Rating	Cat. No.				Terminal Wire Range
Type	Function	Trip Unit		D Interrupting	G Interrupting	J Interrupting [5]	L Interrupting [5]	
Micrologic Standard	LI	3.2	60 A 100 A 150 A	HDL36060TU31X HDL36100TU31X HDL36150TU31X	HGL36060TU31X HGL36100TU31X HGL36150TU31X	HJL36060TU31X HJL36100TU31X HJL36150TU31X	HLL36060TU31X HLL36100TU31X HLL36150TU31X	AL150HD 14–3/0 AWG Al or Cu
			250 A	JDL36250TU31X	JGL36250TU31X	JJL36250TU31X	JLL36250TU31X	AL250JD 3/0 AWG–350 kcmil Al or Cu [7]
Micrologic Standard	LSI	3.2S	60 A 100 A 150 A	HDL36060TU33X HDL36100TU33X HDL36150TU33X	HGL36060TU33X HGL36100TU33X HGL36150TU33X	HJL36060TU33X HJL36100TU33X HJL36150TU33X	HLL36060TU33X HLL36100TU33X HLL36150TU33X	AL150HD 14–3/0 AWG Al or Cu
			250 A	JDL36250TU33X	JGL36250TU33X	JJL36250TU33X	JLL36250TU33X	AL250JD 3/0 AWG–350 kcmil Al or Cu [7]
Micrologic Ammeter	LSI	5.2A	60 A 100 A 150 A	HDL36060TU43X HDL36100TU43X HDL36150TU43X	HGL36060TU43X HGL36100TU43X HGL36150TU43X	HJL36060TU43X HJL36100TU43X HJL36150TU43X	HLL36060TU43X HLL36100TU43X HLL36150TU43X	AL150HD 14–3/0 AWG Al or Cu
			250 A	JDL36250TU43X	JGL36250TU43X	JJL36250TU43X	JLL36250TU43X	AL250JD 3/0 AWG–350 kcmil Al or Cu [7]
Micrologic Energy	LSI	5.2E	60 A 100 A 150 A	HDL36060TU53X HDL36100TU53X HDL36150TU53X	HGL36060TU53X HGL36100TU53X HGL36150TU53X	HJL36060TU53X HJL36100TU53X HJL36150TU53X	HLL36060TU53X HLL36100TU53X HLL36150TU53X	AL150HD 14–3/0 AWG Al or Cu
			250 A	JDL36250TU53X	JGL36250TU53X	JJL36250TU53X	JLL36250TU53X	AL250JD 3/0 AWG–350 kcmil Al or Cu [7]
Micrologic Ammeter	LSIG	6.2A	60 A 100 A 150 A	HDL36060TU44X HDL36100TU44X HDL36150TU44X	HGL36060TU44X HGL36100TU44X HGL36150TU44X	HJL36060TU44X HJL36100TU44X HJL36150TU44X	HLL36060TU44X HLL36100TU44X HLL36150TU44X	AL150HD 14–3/0 AWG Al or Cu
			250 A	JDL36250TU44X	JGL36250TU44X	JJL36250TU44X	JLL36250TU44X	AL250JD 3/0 AWG–350 kcmil Al or Cu [7]
Micrologic Energy	LSIG	6.2E	60 A 100 A 150 A	HDL36060TU54X HDL36100TU54X HDL36150TU54X	HGL36060TU54X HGL36100TU54X HGL36150TU54X	HDL36060TU54X HJL36100TU54X HJL36150TU54X	HLL36060TU54X HLL36100TU54X HLL36150TU54X	AL150HD 14–3/0 AWG Al or Cu
			250 A	JDL36250TU54X	JGL36250TU54X	JJL36250TU54X	JLL36250TU54X	AL250JD 3/0 AWG–350 kcmil Al or Cu [7]

Table 3.8: H-Frame 150A and J-Frame 250 A 3P Basic UL Current-Limiting [5] Circuit Breaker Frame Without Terminations [8] or Trip Unit (600 Vac, 250 Vdc)

Circuit Breaker Frame	Ampere Rating	Cat. No.			
		D Interrupting	G Interrupting	J Interrupting [5]	L Interrupting [5]
H-Frame	15–60 A	HDF36000F06	HGF36000F06	HJF36000F06	HLF36000F06
	70–150 A	HDF36000F15	HGF36000F15	HJF36000F15	HLF36000F15
J-Frame	150–250 A	JDF36000F25	JGF36000F25	JJF36000F25	JLF36000F25

Table 3.9: H- and J-Frame Interrupting Ratings

Voltage	Interrupting Rating			
	D	G	J	L
240 Vac	25 KA	65 kA	100 kA	125 kA
480 Vac	18 kA	35 kA	65 kA	100 kA
600 Vac	14 kA	18 kA	25 kA	50 kA

Table 3.10: Termination Letter

Termination Letter
A - I-Line (See Section 9)
F = No Lugs (includes terminal nut kit on both ends)[9]
L = Lugs both ends
M = Lugs ON end Terminal Nut Kit OFF end
P = Lugs OFF end Terminal Nut Kit ON end
N = Plug-in
D = Drawout
S = Rear Connected
H D **L** 3 6 0 1 5 T For factory-installed termination, place termination letter in the third block of the circuit breaker catalog number.
Accessories see Digest Section 7
Optional Lugs see Digest Section 7
Dimensions see Digest Section 7
Enclosures see Digest Section 7

Table 3.11: Micrologic Field-Installable Trip Unit

Model	Trip Function	Trip Unit	Continuous Current	Trip Unit Cat. No.
Micrologic Standard	LI	3.2	15-20-25-30-35-40-45-50-60	HE3060U31X
			35-40-45-50-60-70-80-90-100	HE3100U31X
			50-60-70-80-90-100-110-125-150	HE3150U31X
			70-80-100-125-150-175-200-225-250	JE3250U31X
	LSI	3.2S	15-20-25-30-35-40-45-50-60	HE3060U33X
			35-40-45-50-60-70-80-90-100	HE3100U33X
			50-60-70-80-90-100-110-125-150	HE3150U33X
			70-80-100-125-150-175-200-225-250	JE3250U33X
Micrologic Ammeter	LSI	5.2A	15–60	HE3060U43X
			35–100	HE3100U43X
			50–150	HE3150U43X
			70–250	JE3250U43X
	LSIG	6.2A	15–60	HE3060U44X
			35–100	HE3100U44X
			50–150	HE3150U44X
			70–250	JE3250U44X
Micrologic Energy	LSI	5.2E	15–60	HE3060U53X
			35–100	HE3100U53X
			50–150	HE3150U53X
			70–250	JE3250U53X
	LSIG	6.2E	15–60	HE3060U54X
			35–100	HE3100U54X
			50–150	HE3150U54X
			70–250	JE3250U54X

[5] J and L interrupts are UL Certified as current limiting.
[6] Circuit breakers will be labeled with Line and Load markings and are not suitable for reverse connections.
Only available on standard (80%) rated 3P unit-mount circuit breakers; not available with I-Line™ or Plug-In constructions.
[7] For smaller wire (4–4/0 AWG Al or Cu), replace the lug wire binding screws with longer binding screws provided.
[8] See Digest Section 7 for lug and termination kits.
[9] Add TS suffix for circuit breaker without terminal nut kit.

© 2017 Schneider Electric
All Rights Reserved

PowerPact L-Frame Molded Case Circuit Breaker

Table 3.12: L-Frame 3 Pole, 600 A Current-Limiting *[10]* Circuit Breakers with Lugs and Field-Interchangeable Electronic Trip Units (600 Vac, 50/60 Hz) *[11][12]*

Electronic Trip Unit			Sensor Rating	Cat. No.				Terminal Wire Range
Type	Function	Trip Unit		D Interrupting	G Interrupting	J Interrupting *[10]*	L Interrupting *[10]*	
Micrologic Standard	LI	3.3	250 A	LDL36250TU31X	LGL36250TU31X	LJL36250TU31X	LLL36250TU31X	AL400L61K3D (1) 2 AWG–600 kcmil Cu (1) 2 AWG–500 kcmil Al
			400 A	LDL36400TU31X	LGL36400TU31X	LJL36400TU31X	LLL36400TU31X	AL600S52K3 (2) 2/0 AWG–500 kcmil Al/Cu
			600 A	LDL36600TU31X	LGL36600TU31X	LJL36600TU31X	LLL36600TU31X	
Micrologic Standard	LSI	3.3S	250 A	LDL36250TU33X	LGL36250TU33X	LJL36250TU33X	LLL36250TU33X	AL400L61K3D (1) 2 AWG–600 kcmil Cu (1) 2 AWG–500 kcmil Al
			400 A	LDL36400TU33X	LGL36400TU33X	LJL36400TU33X	LLL36400TU33X	AL600S52K3 (2) 2/0 AWG–500 kcmil Al/Cu
			600 A	LDL36600TU33X	LGL36600TU33X	LJL36600TU33X	LLL36600TU33X	
Micrologic Ammeter	LSI	5.3A	400 A	LDL36400TU43X	LGL36400TU43X	LJL36400TU43X	LLL36400TU43X	AL600S52K3 (2) 2/0 AWG–500 kcmil Al/Cu
			600 A	LDL36600TU43X	LGL36600TU43X	LJL36600TU43X	LLL36600TU43X	
Micrologic Energy	LSI	5.3E	400 A	LDL36400TU53X	LGL36400TU53X	LJL36400TU53X	LLL36400TU53X	
			600 A	LDL36600TU53X	LGL36600TU53X	LJL36600TU53X	LLL36600TU53X	
Micrologic Ammeter	LSIG	6.3A	400 A	LDL36400TU44X	LGL36400TU44X	LJL36400TU44X	LLL36400TU44X	
			600 A	LDL36600TU44X	LGL36600TU44X	LJL36600TU44X	LLL36600TU44X	
Micrologic Energy	LSIG	6.3E	400 A	LDL36400TU54X	LGL36400TU54X	LJL36400TU54X	LLL36400TU54X	
			600 A	LDL36600TU54X	LGL36600TU54X	LJL36600TU54X	LLL36600TU54X	

Table 3.13: L-Frame 3 Pole, 600 A Circuit Breaker Frame without Terminations or Trip Unit (600 Vac, 50/60 Hz) *[13]*

Ampere Rating	Interrupting Rating			
	D	G	J	L
250 A (70–250 A)	LDF36000F25	LGF36000F25	LJF36000F25	LLF36000F25
400 A (125–400 A	LDF36000F40	LGF36000F40	LJF36000F40	LLF36000F40
600 A (200–600 A)	LDF36000F60	LGF36000F60	LJF36000F60	LLF36000F60

Table 3.14: Termination Options

Termination Letter	Termination Option
A	I-Line (See Section 9)
F	No lugs (includes terminal nut kit on both ends)
L	Lugs both ends
M	Lugs ON end, terminal nut kit OFF end
P	Lugs OFF end, terminal nut kit ON end
N	Plug In
D	Drawout
S	Rear Connected

For factory-installed termination, place termination letter in the third block of the circuit breaker catalog number.
M G **L** 3 6 4 0 0 or L G **L** 3 6 6 0 0 U 4 4 X

Accessories see Digest Section 7
Optional Lugs see Digest Section 7
Dimensions see Digest Section 7

Table 3.15: L-Frame 3P Field-Installable Micrologic Electronic Trip Units

Electronic Trip Unit			Continuous Current	Trip Unit Cat. No.
Type	Function	Code		
Micrologic Standard	LI	3.3	70-80-100-125-150-175-200-225-250	LE3250U31X
			125-150-175-200-225-250-300-350-400	LE3400U31X
			200-225-250-300-350-400-450-500-600	LE3600U31X
	LSI	3.3S	70-80-100-125-150-175-200-225-250	LE3250U33X
			125-150-175-200-225-250-300-350-400	LE3400U33X
			200-225-250-300-350-400-450-500-600	LE3600U33X
Micrologic Ammeter	LSI	5.3A	125–400	LE3400U43X
			200–600	LE3600U43X
	LSIG	6.3A	125–400	LE3400U44X
			200–600	LE3600U44X
Micrologic Energy	LSI	5.3E	125–400	LE3400U53X
			200–600	LE3600U53X
	LSIG	6.3E	125–400	LE3400U54X
			200–600	LE3600U54X

Table 3.16: L-Frame Interrupting Ratings

Voltage	Interrupting Rating			
	D	G	J	L
240 Vac	25 kA	65 kA	100 kA	125 kA
480 Vac	18 kA	35 kA	65 kA	100 kA
600 Vac	14 kA	18 kA	25 kA	50 kA

[10] J and L interrupts are UL Certified as current limiting.
[11] Circuit breakers will be labeled with Line and Load markings and are not suitable for reverse connections.
[12] Only available on 3P unit-mount circuit breakers.
[13] See Digest Section 7 for lug and termination kits.

© 2017 Schneider Electric
All Rights Reserved
2/15/2017

Automatic molded case switches open instantaneously at a factory preset magnetic trip point, calibrated to protect only the molded case switch itself, when it is subjected to high fault currents. The trip point is nonadjustable and provides no overload or low level fault protection.

Molded case switches open when the handle is switched to the OFF position or in response to an auxiliary tripping device such as a shunt trip.

All molded case switches will accept the same lugs and accessories as equivalent thermal-magnetic circuit breakers, with the exception of Q-frame switches which do not have electrical accessories available.

Automatic molded case switches are UL Listed per UL 489 and are CSA Certified.

Table 3.17: Q-Frame (240 Vac) PowerPact™ Automatic Molded Case Switches

Circuit Breaker	Poles	Ampere Rating	J Interrupting Rating		Terminal	Wire Range
			Cat. No.	Trip Point		
Q-Frame *[1]*	2	225 A	QBL22000S22	4500 A		4 AWG–300 kcmil
	3	225 A	QBL32000S22	4500 A		

[1] Withstand rating of 10 kA at 240 Vac.

© 2017 Schneider Electric
All Rights Reserved

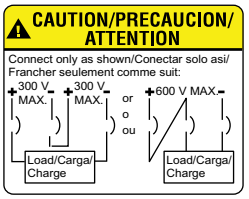

Connection Diagram

500 Vdc Circuit Breakers

The UL Listed thermal-magnetic molded case circuit breakers shown below are specifically designed for use on ungrounded dc systems having a maximum short-circuit voltage of 500 Vdc or a maximum floating (unloaded) voltage of 600 Vdc. The circuit breakers are suitable for use only with UPS (uninterruptable power supplies) and ungrounded systems.

This two-level voltage rating allows these circuit breakers to be applied to battery sources having a short-circuit availability of 20,000 amperes for LH, and MH circuit breakers and 25,000 amperes for PAF circuit breakers at 500 Vdc.

LH and MH circuit breakers are provided with an adjustable magnetic trip that is readily accessible by means of a single adjustment on the face of the circuit breaker. PAF circuit breakers have a fixed magnetic trip range.

These circuit breakers are UL Listed for the interrupting ratings shown only if applied with three poles connected in series (series connection is external to circuit breaker). See diagram below.

NOTE: Due to external series connection, I-Line™ circuit breakers are not available for this application.

Table 3.18: DC Molded Case Circuit Breakers—Adjustable Magnetic Trip

Ampere Rating	Circuit Breaker Cat. No.	Adjustable Magnetic Trip Range—DC Amperes*[1]*		Interrupting Rating @ 500 Vdc
		Low	High	
100 A	JGL37100D81	400	600	20 k AIR
125 A	JGL37125D81	400	600	
150 A	JGL37150D81	400	600	
175 A	JGL37175D81	400	600	
200 A	JGL37200D82	500	850	20 k AIR
225 A	JGL37225D82	500	850	
250 A	JGL37250D82	500	850	
250 A	LHL3625025DC	625	1250	20 k AIR
300 A	LHL3630026DC	750	1500	
350 A	LHL3635029DC	875	1750	
400 A	LHL3640030DC	1000	2000	
450 A	MHL3645031DC	1125	2250	20 k AIR
500 A	MHL3650032DC	1250	2500	
600 A	MHL3660033DC	1500	3000	
700 A	MHL3670035DC	1750	3500	
800 A	MHL3680036DC	2000	4000	
900 A	MHL3690039DC	2500	5000	
1000 A	MHL36100040DC	2500	5000	
1200 A	MHL36120040DC *[2]*	2500	5000	25 k AIR
450 A	MHL3645031DCH	1125	2250	50 k AIR
500 A	MHL3650032DCH	1250	2500	
600 A	MHL3660033DCH	1500	3000	
700 A	MHL3670035DCH	1750	3500	
800 A	MHL3680036DCH	2000	4000	
900 A	MHL3690039DCH	2500	5000	
1000 A	MHL36100040DCH	2500	5000	
1200 A	MHL36120040DCH *[2]*	2500	5000	50 k AIR

Table 3.19: Termination Options

Termination Letter	Termination Option
L	Lugs Both Ends
F	No Lugs (bus bar connection)
S	Rear Connection

JGL37125D81–Place termination letter in third block of circuit breaker catalog number.

Accessories see page 3-21 through page 3-27 and Digest Section 7
Optional Lugs see page 3-26 and Digest Section 7
Dimensions see Digest Section 7
Enclosures see Digest Section 7

Table 3.20: DC Molded Case Circuit Breakers—Fixed Magnetic Trip

Ampere Rating	Circuit Breaker Cat. No.	Fixed Magnetic Trip Range—DC Amperes*[1]*		Interrupting Rating @ 500 Vdc
		Hold	Trip	
1200 A	PAF361200DC	1200	1620	25 k AIR
1600 A	PAF361600DC	1600	2160	
2000 A	PAF362000DC	2000	2700	
2500 A	PCF362500DC	2500	3375	25 k AIR

[1] Magnetic trip tolerances are -20%/+30% from the nominal values shown.
[2] Suitable for use only in ventilated enclosure. Minimum enclosure dimensions are 38” h x 20” w x 7” d with a minimum of 300 square inches of ventilation near the top and bottom of the enclosure.

© 2017 Schneider Electric
All Rights Reserved

FAL 1P
15–100 A

FAL/FHL 2P
15–100 A

FAL/FHL 3P
15–100 A

F-Frame Molded Case Circuit Breakers

Thermal-magnetic molded case circuit breakers shown here are permanent trip UL Listed, CSA Certified, IEC rated, and also meet the requirements of Federal Specification W–C–375B/GEN as indicated in Digest Section 7.

NOTE: Consider using PowerPact™ circuit breakers for situations requiring circuit breaker accessories. See Digest Section 7 for more information.

Table 3.22: F-Frame—100 A, Thermal-Magnetic, Individually-Mounted, Standard Interrupting, 240 Vac

Ampere Rating	Fixed AC Magnetic Trip		Cat. No.			Terminal Wire Range (AWG)
	Hold	Trip	1 P 120 Vac	2 P 240 Vac	3 P 240 Vac	
15 A	275 A	600 A	FAL12015	FAL22015	FAL32015	AL50FA 14–4 Cu or 12–4 Al
20 A	275 A	600 A	FAL12020	FAL22020	FAL32020	
25 A	275 A	600 A	FAL12025	FAL22025	FAL32025	
30 A	275 A	600 A	FAL12030	FAL22030	FAL32030	
35 A	400 A	850 A	FAL12035	FAL22035	FAL32035	AL100FA 14–1/0 Cu or 12–1/0 Al
40 A	400 A	850 A	FAL12040	FAL22040	FAL32040	
45 A	400 A	850 A	FAL12045	FAL22045	FAL32045	
50 A	400 A	850 A	FAL12050	FAL22050	FAL32050	
60 A	800 A	1450 A	FAL12060	FAL22060	FAL32060	
70 A	800 A	1450 A	FAL12070	FAL22070	FAL32070	
80 A	800 A	1450 A	FAL12080	FAL22080	FAL32080	
90 A	900 A	1700 A	FAL12090	FAL22090	FAL32090	
100 A	900 A	1700 A	FAL12100	FAL22100	FAL32100	

Table 3.21: Termination Option

Termination Letter
F = No Lugs
L = Lugs both ends
P with MT Suffix = Lugs ON end
P = Lugs OFF end
F A **L** 3 6 1 0 0 For factory-installed termination, place termination letter in the third block of the circuit breaker catalog number.

Table 3.23: F-Frame—100 A, Thermal-Magnetic, Individually-Mounted, 480 Vac

Ampere Rating	Fixed AC Magnetic Trip		Standard Interrupting Cat. No.			Terminal
	Hold	Trip	1P 277 Vac, 125 Vdc	2P 480 Vac, 250 Vdc	3P 480 Vac, 250 Vdc	
15 A	275 A	600 A	FAL14015	FAL24015	FAL34015	AL50FA (1) 14–4 Cu or (1) 12–4 Al
20 A	275 A	600 A	FAL14020	FAL24020	FAL34020	
25 A	275 A	600 A	FAL14025	FAL24025	FAL34025	
30 A	275 A	600 A	FAL14030	FAL24030	FAL34030	
35 A	400 A	850 A	FAL14035	FAL24035	FAL34035	AL100FA (1) 14–1/0 Cu or (1) 12–1/0 Al
40 A	400 A	850 A	FAL14040	FAL24040	FAL34040	
45 A	400 A	850 A	FAL14045	FAL24045	FAL34045	
50 A	400 A	850 A	FAL14050	FAL24050	FAL34050	
60 A	800 A	1450 A	FAL14060	FAL24060	FAL34060	
70 A	800 A	1450 A	FAL14070	FAL24070	FAL34070	
80 A	800 A	1450 A	FAL14080	FAL24080	FAL34080	
90 A	900 A	1700 A	FAL14090	FAL24090	FAL34090	
100 A	900 A	1700 A	FAL14100	FAL24100	FAL34100	

Table 3.24: F-Frame—100 A, Thermal-Magnetic, Individually-Mounted, 600 Vac

Ampere Rating	Fixed AC Magnetic Trip		Cat. No.							Terminal Wire Range (AWG)
			Standard Interrupting		High Interrupting			Current Limiting		
	Hold	Trip	2P 600 Vac, 250 Vdc	3P 600 Vac, 250 Vdc	1P 277 Vac, 125 Vdc	2P 600 Vac, 250 Vdc	3P 600 Vac, 250 Vdc	2P 600 Vac, 250 Vdc	3P 600 Vac, 250 Vdc	
15 A	275 A	600 A	FAL26015	FAL36015	FHL16015	FHL26015	FHL36015	—	—	AL50FA 14–4 Cu or 12–4 Al
20 A	275 A	600 A	FAL26020	FAL36020	FHL16020	FHL26020	FHL36020	FIL26020	FIL36020	
25 A	275 A	600 A	FAL26025	FAL36025	FHL16025	FHL26025	FHL36025	FIL26025	FIL36025	
30 A	275 A	600 A	FAL26030	FAL36030	FHL16030	FHL26030	FHL36030	FIL26030	FIL36030	
35 A	400 A	850 A	FAL26035	FAL36035	FHL16035	FHL26035	FHL36035	FIL26035	FIL36035	AL100FA 14–1/0 Cu or 12–1/0 Al
40 A	400 A	850 A	FAL26040	FAL36040	FHL16040	FHL26040	FHL36040	FIL26040	FIL36040	
45 A	400 A	850 A	FAL26045	FAL36045	FHL16045	FHL26045	FHL36045	FIL26045	FIL36045	
50 A	400 A	850 A	FAL26050	FAL36050	FHL16050	FHL26050	FHL36050	FIL26050	FIL36050	
60 A	800 A	1450 A	FAL26060	FAL36060	FHL16060	FHL26060	FHL36060	FIL26060	FIL36060	
70 A	800 A	1450 A	FAL26070	FAL36070	FHL16070	FHL26070	FHL36070	FIL26070	FIL36070	
80 A	800 A	1450 A	FAL26080	FAL36080	FHL16080	FHL26080	FHL36080	FIL26080	FIL36080	
90 A	900 A	1700 A	FAL26090	FAL36090	FHL16090	FHL26090	FHL36090	FIL26090	FIL36090	
100 A	900 A	1700 A	FAL26100	FAL36100	FHL16100	FHL26100	FHL36100	FIL26100	FIL36100	

Accessories see page 3-21 through page 3-27
Optional Lugs see page 3-26
Dimensions see page 3-29
Enclosures see Digest Section 7

Table 3.25: Interrupting Ratings

Voltage	FAL			FHL	FCL *[1]*	FIL
	240 Vac	480 Vac	600 Vac			
240 Vac	10 kA	18 kA (1P), 25 kA (2P, 3P)	25 kA	25 kA (1P), 65 kA (2P, 3P)	100 kA	200 kA
480 Vac	—	18 kA	18 kA	25 kA (2P, 3P)	65 kA	200 kA
600 Vac	—	—	14 kA	18 kA (2P, 3P)	—	100 kA

[1] See Section 11.

© 2017 Schneider Electric
All Rights Reserved
2/15/2017

FA 1P
1.5 in. (38 mm)
Mounting Height

FA 2P
3 in. (76 mm)
Mounting Height

FA 3P
5.5 in. (114 mm)
Mounting Height

F-Frame I-Line Circuit Breakers

NOTE: Consider using PowerPact™ circuit breakers for situations requiring circuit breaker accessories. See Digest Section 7 for more information.

Table 3.26: F-Frame—100 A, Thermal-Magnetic, I-Line™ Construction, 240 Vac, Standard Interrupting

Ampere Rating	Fixed AC Magnetic Trip		Cat. No.		Terminal Wire Range (AWG)
	Hold	Trip	2 P [2] 240 Vac	3 P 240 Vac	
15 A	275 A	600 A	FA22015( )	FA32015	AL50FA 14–4 Cu or 12–4 Al
20 A	275 A	600 A	FA22020( )	FA32020	
25 A	275 A	600 A	FA22025( )	FA32025	
30 A	275 A	600 A	FA22030( )	FA32030	
35 A	400 A	850 A	FA22035( )	FA32035	AL100FA 14–1/0 Cu or 12–1/0 Al
40 A	400 A	850 A	FA22040( )	FA32040	
45 A	400 A	850 A	FA22045( )	FA32045	
50 A	400 A	850 A	FA22050( )	FA32050	
60 A	800 A	1450 A	FA22060( )	FA32060	
70 A	800 A	1450 A	FA22070( )	FA32070	
80 A	800 A	1450 A	FA22080( )	FA32080	
90 A	900 A	1700 A	FA22090( )	FA32090	
100 A	900 A	1700 A	FA22100( )	FA32100	

Table 3.27: F-Frame—100 A, Thermal-Magnetic, I-Line Construction, 480 Vac

Ampere Rating	Fixed AC Magnetic Trip		Standard Interrupting			Terminal Wire Range (AWG)
	Hold	Trip	1P [2][3] 277 Vac, 125 Vdc	2P [2] 480 Vac, 250 Vdc	3P 480 Vac, 250 Vdc	
15 A	275 A	600 A	—	FA24015( )	FA34015	AL50FA (1) 14–4 Cu or (1) 12–4 Al
20 A	275 A	600 A	—	FA24020( )	FA34020	
25 A	275 A	600 A	—	FA24025( )	FA34025	
30 A	275 A	600 A	—	FA24030( )	FA34030	
35 A	400 A	850 A	FA14035( )	FA24035( )	FA34035	AL100FA (1) 14–1/0 Cu or (1) 12–1/0 Al
40 A	400 A	850 A	FA14040( )	FA24040( )	FA34040	
45 A	400 A	850 A	FA14045( )	FA24045( )	FA34045	
50 A	400 A	850 A	FA14050( )	FA24050( )	FA34050	
60 A	800 A	1450 A	FA14060( )	FA24060( )	FA34060	
70 A	800 A	1450 A	FA14070( )	FA24070( )	FA34070	
80 A	800 A	1450 A	FA14080( )	FA24080( )	FA34080	
90 A	900 A	1700 A	FA14090( )	FA24090( )	FA34090	
100 A	900 A	1700 A	FA14100( )	FA24100( )	FA34100	

Table 3.28: F-Frame—100 A, Thermal-Magnetic, I-Line™ Construction, 600 Vac

Ampere Rating	Fixed AC Magnetic Trip		Cat. No.							Terminal Wire Range (AWG)
			Standard Interrupting		High Interrupting			Current Limiting		
	Hold	Trip	2P [2] 600 Vac, 250 Vdc	3 P 600 Vac, 250 Vdc	1P [2][3] 277 Vac, 125 Vdc	2P [2] 600 Vac, 250 Vdc	3P 600 Vac, 250 Vdc	2P [2] 600 Vac, 250 Vdc	3P 600 Vac, 250 Vdc	
15 A	275 A	600 A	FA26015( )	FA36015	FH16015( )	FH26015( )	FH36015	—	—	AL50FA 14–4 Cu or 12–4 Al
20 A	275 A	600 A	FA26020( )	FA36020	FH16020( )	FH26020( )	FH36020	FI26020( )	FI36020	
25 A	275 A	600 A	FA26025( )	FA36025	FH16025( )	FH26025( )	FH36025	—	—	
30 A	275 A	600 A	FA26030( )	FA36030	FH16030( )	FH26030( )	FH36030	FI26030( )	FI36030	
35 A	400 A	850 A	FA26035( )	FA36035	FH16035( )	FH26035( )	FH36035	—	—	AL100FA 14–1/0 Cu or 12–1/0 Al
40 A	400 A	850 A	FA26040( )	FA36040	FH16040( )	FH26040( )	FH36040	FI26040( )	FI36040	
45 A	400 A	850 A	FA26045( )	FA36045	FH16045( )	FH26045( )	FH36045	—	—	
50 A	400 A	850 A	FA26050( )	FA36050	FH16050( )	FH26050( )	FH36050	FI26050( )	FI36050	
60 A	800 A	1450 A	FA26060( )	FA36060	FH16060( )	FH26060( )	FH36060	FI26060( )	FI36060	
70 A	800 A	1450 A	FA26070( )	FA36070	FH16070( )	FH26070( )	FH36070	FI26070( )	FI36070	
80 A	800 A	1450 A	FA26080( )	FA36080	FH16080( )	FH26080( )	FH36080	FI26080( )	FI36080	
90 A	900 A	1700 A	FA26090( )	FA36090	FH16090( )	FH26090( )	FH36090	FI26090( )	FI36090	
100 A	900 A	1700 A	FA26100( )	FA36100	FH16100( )	FH26100( )	FH36100	FI26100( )	FI36100	

Table 3.29: Phase Options

Phase Option Letter	1P	2P	3P
A B C	FA14035A FA14035B FA14035C	—	—
AB AC BC	—	FA24030AB FA24030AC FA24030BC	—
ABC CBA	—	—	FA34030 FA34030CBA

Accessories see page 3-21 through page 3-27
Optional Lugs see page 3-26
Dimensions see page 3-29
Enclosures see Digest Section 7

Table 3.30: Interrupting Ratings

Voltage	FA			FH	FC[4]	FI
	240 Vac	480 Vac	600 Vac			
240 Vac	10 kA	18 kA (1P), 25 kA (2P, 3P)	25 kA	25 kA (1P) 65 kA (2P, 3P)	100 kA	200 kA
277 Vac	—	18 kA	—	—	65 kA	—
480 Vac	—	18 kA	18 kA	25 kA (2P, 3P)	65 kA	200 kA
600 Vac	—	—	14 kA	18 kA (2P, 3P)	—	100 kA

[2] 1P and 2P circuit breaker catalog numbers are completed by adding the required phase connection letters as a suffix. See Phase Option Table.
[3] Rated 277 Vac, 125 Vdc, 15–30 A circuit breaker suitable for use with 60°C or 75°C conductors. 35–100 A circuit breakers are suitable for use with 75°C conductors.
[4] See Section 11.

© 2017 Schneider Electric
All Rights Reserved
2/15/2017

Q4L
2P and 3P
250–400 A

Q4 2P and 3P
6 in. (152 mm)
Mounting Height

Table 3.33: Interrupting Ratings

Voltage	KI	Q4
240 Vac	200 kA	25 kA
480 Vac	200 kA	—
600 Vac	100 kA	—

Accessories see page 3-21 through page 3-27
Optional Lugs see page 3-26
Dimensions see page 3-29
Enclosures see Digest Section 7

Q4-Frame

NOTE: Consider using PowerPact™ circuit breakers for situations requiring circuit breaker accessories. See Digest Section 7 for more information.

Table 3.31: Q4-Frame—400 A, Thermal-Magnetic, Individually-Mounted, 240 Vac

Ampere Rating	Adjustable AC Magnetic Trip *[5]*		Standard Interrupting Cat. No.	Terminal Wire Range
	Low	High		
2P, 240 Vac				
250	1250 A	2500 A	Q4L2250	AL400LA (1) 1 AWG–600 kcmil Al or (2) 1 AWG–250 kcmil Al
300	1500 A	3000 A	Q4L2300	
350	1750 A	3500 A	Q4L2350	
400	2000 A	4000 A	Q4L2400	
3P, 240 Vac				
250	1250 A	2500 A	Q4L3250	AL400LA (1) 1 AWG–600 kcmil Al or (2) 1 AWG–250 kcmil Al
300	1500 A	3000 A	Q4L3300	
350	1750 A	3500 A	Q4L3350	
400	2000 A	4000 A	Q4L3400	

NOTE: Consider using PowerPact circuit breakers for situations requiring circuit breaker accessories. See Digest Section 7 for more information.

Table 3.32: Q4-Frame—400 A, Thermal-Magnetic, I-Line™ Construction, 240 Vac

Ampere Rating	Adjustable AC Magnetic Trip *[5]*		Standard Interrupting Cat. No.	Terminal Wire Range
	Low	High		
2P, 240 Vac*[6]*				
250	1250 A	2500 A	Q422250( )	AL400LA (1) 1 AWG–600 kcmil Al or (2) 1 AWG–250 kcmil Al
300	1500 A	3000 A	Q422300( )	
350	1750 A	3500 A	Q422350( )	
400	2000 A	4000 A	Q422400( )	
3P, 240 Vac				
250	1250 A	2500 A	Q43250	AL400LA (1) 1 AWG–600 kcmil Al or (2) 1 AWG–250 kcmil Al
300	1500 A	3000 A	Q43300	
350	1750 A	3500 A	Q43350	
400	2000 A	4000 A	Q43400	

Table 3.34: Phase Options

Phase Option Letter	2P	3P
AB AC BC	KA26250AB KA26250AC KA26250BC	—
ABC CBA	—	KA36250 KA36250CBA

[5] UL magnetic trip setting tolerances are ±25% for low and ±20% for high from nominal value shown.
[6] 2P and 3P circuit breaker catalog numbers are completed by adding the required phase connection letters as a suffix. See Phase Option Table.

© 2017 Schneider Electric
All Rights Reserved

LA/LHL
2P and 3P
125–400 A

L-Frame Molded Case Circuit Breaker

NOTE: Consider using PowerPact™ circuit breakers for situations requiring circuit breaker accessories. See Digest Section 7 for more information.

Table 3.35: L-Frame—600 A, Thermal-Magnetic, Individually-Mounted Circuit Breakers, 600 Vac

Ampere Rating	Adjustable AC Magnetic Trip		Cat. No.		Terminal Wire Range
	Low	High	Standard Interrupting	High Interrupting	
2P, 600 Vac, 250 Vdc					
125 A	625 A	1250 A	LAL26125	LHL26125	AL400LA (1) 1 AWG–600 kcmil Al or (2) 1 AWG–250 kcmil Al
150 A	750 A	1500 A	LAL26150	LHL26150	
175 A	875 A	1750 A	LAL26175	LHL26175	
200 A	1000 A	2000 A	LAL26200	LHL26200	
225 A	1125 A	2250 A	LAL26225	LHL26225	
250 A	1250 A	2500 A	LAL26250	LHL26250	
300 A	1500 A	3000 A	LAL26300	LHL26300	
350 A	1750 A	3500 A	LAL26350	LHL26350	
400 A	2000 A	4000 A	LAL26400	LHL26400	
3P, 600 Vac, 250 Vdc					
125 A	625 A	1250 A	LAL36125	LHL36125	AL400LA (1) 1 AWG–600 kcmil Al or (2) 1 AWG–250 kcmil Al
150 A	750 A	1500 A	LAL36150	LHL36150	
175 A	875 A	1750 A	LAL36175	LHL36175	
200 A	1000 A	2000 A	LAL36200	LHL36200	
225 A	1125 A	2250 A	LAL36225	LHL36225	
250 A	1250 A	2500 A	LAL36250	LHL36250	
300 A	1500 A	3000 A	LAL36300	LHL36300	
350 A	1750 A	3500 A	LAL36350	LHL36350	
400 A	2000 A	4000 A	LAL36400	LHL36400	

Table 3.36: Interrupting Ratings

Voltage	LAL	LHL	LCL	LIL
240 Vac	42 kA	65 kA	100 kA	200 kA
480 Vac	30 kA	35 kA	65 kA	200 kA
600 Vac	22 kA	25 kA	35 kA	100 kA

Accessories see page 3-21 through page 3-27
Optional Lugs see page 3-26
Dimensions see page 3-29
Enclosures see Digest Section 7

© 2017 Schneider Electric
All Rights Reserved
2/15/2017

Mag-Gard Motor Circuit Protector

Instantaneous trip magnetic only circuit breakers have a single adjustment which simultaneously sets the magnetic trip level of each individual pole. Mag-Gard circuit breakers comply with NEC® requirements for providing motor circuit protection when installed as part of a UL Listed combination controller having motor overload protection. Interrupting ratings are established for these UL Recognized Components only when they are used in combination with motor starters with properly sized overload relays and contactors.

Mag-Gard circuit breakers will accept the same lugs and accessories as equivalent thermal-magnetic circuit breakers.

Table 3.37: Magnetic Only LAL Mag-Gard, 400 A, 600 Vac, 50/60 Hz *[7]*

Ampere Rating		Adjustable *[8]* Trip Range	Cat. No. 3P Only
GJL *[9]*	3	9–33 A	GJL36003M01
	7	21–77 A	GJL36007M02
	15	45–165 A	GJL36015M03
	30	90–330 A	GJL36030M04
	50	150–550 A	GJL36050M05
	75	225–825 A	GJL36075M06

NOTE: Each ampere rating can be ordered with any designated trip range for the frame by adding the proper suffix to the catalog numbers.

Table 3.38: Special Low Mags Magnetic Trip Settings for PowerPact H- and J-Frame Thermal Magnetic Circuit Breakers 70–125 A

Amps	Special Low Mags		Ii on Label	Mag Suffix	Interrupting Rating			
	Hold *[10]*	Trip *[10]*			D	G	J	L
70	400	850	625	H83	HDL36070H83	HGL36070H83	HJL36070H83	HLL36070H83
80	400	850	625	H83	HDL36080H83	HGL36080H83	HJL36080H83	HLL36080H83
90	400	850	625	H83	HDL36090H83	HGL36090H83	HJL36090H83	HLL36090H83
100	400	850	625	H83	HDL36100H83	HGL36100H83	HJL36100H83	HLL36100H83
110	400	850	625	H83	HDL36110H83	HGL36110H83	HJL36110H83	HLL36110H83
125	800	1450	1125	H84	HDL36125H84	HGL36125H84	HJL36125H84	HLL36125H84

Table 3.39: Special High Mags Magnetic Trip Settings for PowerPact H- and J-Frame Thermal Magnetic Circuit Breakers

Amps	Special High Mags		Ii on Label	Mag Suffix	Interrupting Rating			
	Hold *[10]*	Trip *[10]*			D	G	J	L
90	900	1700	1300	H85	HDL36090H85	HGL36090H85	HJL36090H85	HLL36090H85

Table 3.40: Special Low Mags Magnetic Trip Settings for PowerPact H- and J-Frame Thermal Magnetic Circuit Breakers 150–200 A

Amps	Special Low Mags		Ii on Label	Mag Suffix	Interrupting Rating			
	Low *[11]*	High *[11]*			D	G	J	L
150	875L	1750H		H29	JDL36150H29	JGL36150H29	JJL36150H29	JLL36150H29
200	1250L	2500H		H32	JDL36200H32	JGL36200H32	JJL36200H32	JLL36200H32

Accessories see page 3-21 through page 3-27
Optional Lugs see page 3-26
Dimensions see page 3-29

Table 3.41: H- and J-Frame Interrupting Ratings

Voltage	Interrupting Rating			
	D	G	J	L
240 Vac	25 KA	65 kA	100 kA	125 kA
480 Vac	18 kA	35 kA	65 kA	100 kA
600 Vac	14 kA	18 kA	25 kA	50 kA

[7] 250 Vdc ratings are available. No UL component recognition.
[8] UL magnetic trip setting tolerances are -20%/+30% from the nominal values shown.
[9] No GJL I-Line available.
[10] Hold and Trip indicate fixed magnetic trip levels
[11] Low and High refer to adjustable mag level setting.

© 2017 Schneider Electric
All Rights Reserved

GJL MCP Selection

Adjustable instantaneous-trip circuit breakers are intended for use in combination with motor starters with overload relays for the protection of motor circuits from short circuits. Other specific applications include rectifiers and resistance welders. These circuit breakers contain a magnetic trip element in each pole with the trip point adjustable from the front. Interrupting ratings are determined by testing the instantaneous-trip circuit breakers in combination with a contactor and overload relay.

Select instantaneous-trip circuit breakers as follows:

This selection table is suitable for motors, other than NEMA Design E, with locked-rotor indicating code letters per NEC® Table 430.7 (b) as follows:

Table 3.42: Locked-Rotor Indicating Codes

Horsepower	Motor Code letter
1/2 or less	A–L
3/4 to 1-1/2	A–K
2 to 3	A–J
5 to 25	A–H
30 to 125	A–G
150 or more	A–F

- For other motors order a special thermal-magnetic circuit breaker with magnetic trip settings for the specific motor— specify motor horsepower, voltage, frequency, full-load current and code letter or locked rotor current.
- Determine motor hp rating from the motor nameplate.
- Refer to the tables and select an instantaneous-trip circuit breaker with an ampere rating recommended for the hp and voltage involved.
- Select an adjustable trip setting of at least 800%, not to exceed 1300%, of the motor full-load amperes (FLA) for other than Design E motors. For Design E motors, select an adjustable trip setting of at least 1100% not to exceed 1700% of FLA.
- The NEC 1300% maximum setting may be inadequate for instantaneous-trip circuit breakers to withstand current surges typical of the magnetization current of autotransformer type reduced voltage starters, or open transition wye-delta starters during transfer from “start” to “run,” constant hp multi-speed motors, and motors labeled “high efficiency.” Select thermal-magnetic circuit breakers from Digest Section 7 for those applications.
- Part-winding motors, per NEC 430.3, should have two circuit breakers selected from the above at not more than one half the allowable trip setting for the horsepower rating. The two circuit breakers should operate simultaneously as a disconnecting means per NEC 430.103.
- Based on NEC 430.52 and NEC Table 430.150. See Digest Section 7 for a available Adjustable Instantaneous-Trip Circuit Breakers.

© 2017 Schneider Electric
All Rights Reserved
2/15/2017

GJL MCP Selection Table

Table 3.43: GJL Adjustable Instantaneous-Trip Circuit Breakers for Single Motor Circuit Protection

Hp Ratings of Induction Type Squirrel-Cage and Wound Rotor Motors 3Ø 60 Hz				Full Load Amperes [12]	GJL Family Mag-Gard Circuit Breaker Cat. No.	Magnetic Trip Settings [13]	
200 Vac	230 Vac	460 Vac	575 Vac			MIN	MAX
			1/2	0.8	GJL36003M01 [14]	1100%	4100%
		1/2		1	GJL36003M01 [14]	900%	3300%
			3/4	1.1	GJL36003M01 [14]	800%	3000%
		3/4		1.4	GJL36003M01	600%	2400%
		1		1.8	GJL36003M01	500%	1800%
	1/2			2	GJL36003M01	500%	1700%
			1-1/2	2.1	GJL36003M01	400%	1600%
1/2				2.3	GJL36003M01	400%	1400%
		1-1/2		2.6	GJL36003M01	300%	1300%
			2	2.7	GJL36003M01 [15]	300%	1200%
	3/4			2.8	GJL36003M01 [15]	300%	1200%
3/4				3.2	GJL36007M02	700%	2400%
		2		3.4	GJL36007M02	600%	2300%
	1			3.6	GJL36007M02	600%	2100%
			3	3.9	GJL36007M02	500%	2000%
1				4.1	GJL36007M02	500%	1900%
		3		4.8	GJL36007M02	400%	1600%
	1-1/2			5.2	GJL36007M02	400%	1500%
1-1/2				6	GJL36007M02	400%	1300%
			5	6.1	GJL36015M03	700%	2700%
	2			6.8	GJL36015M03	700%	2400%
		5		7.6	GJL36015M03	600%	2200%
2				7.8	GJL36015M03	600%	2100%
			7-1/2	9	GJL36015M03	500%	1800%
	3			9.6	GJL36015M03	500%	1700%
3		7-1/2	10	11	GJL36015M03	400%	1500%
		10		14	GJL36030M04	600%	2400%
	5			15.2	GJL36030M04	600%	2200%
			1	17	GJL36030M04	500%	1900%
5				17.5	GJL36030M04	500%	1900%
		15		21	GJL36030M04	400%	1600%
	7-1/2		20	22	GJL36030M04	400%	1500%
7-1/2				25.3	GJL36030M04	400%	1300%
		20	25	27	GJL36050M05	600%	2000%
	10			28	GJL36050M05	500%	2000%
			30	32	GJL36050M05	500%	1700%
10				32.2	GJL36050M05	500%	1700%
		25		34	GJL36050M05	400%	1600%
		30		40	GJL36050M05	400%	1400%
			40	41	GJL36050M05	400%	1300%
	15			42	GJL36075M06	400%	1300%
15				48.3	GJL36075M06	500%	1700%
		40	50	52	GJL36075M06	400%	1600%
	20			54	GJL36075M06	400%	1500%
20			60	62	GJL36075M06	400%	1300%
		50		65	GJL36075M06	300%	1300%

[12] Motor full-load currents are taken from NEC Table 430.150. Select wire and circuit breakers on basis of horsepower rather than nameplate full-load current per NEC 430.6 (A) for general motor applications. Do not use these values to select overload relay thermal units. See Digest Section 14 for selection of thermal units when actual full load current is not known. The voltages listed are rated motor voltages. Corresponding nominal system voltages are 200–208, 220–240, 440–480 and 550–600 V.
[13] Only MIN and MAX settings are shown, intermediate settings are available on all circuit breakers.
[14] See NEC 430.52(A) for circuit breaker settings above 800%.
[15] If due to motor starting characteristics, trip settings at the 1300% maximum permitted level are needed, the next size Mag-Gard circuit breaker should be chosen.

© 2017 Schneider Electric
All Rights Reserved

I-Line™ Special Terminal Connectors

Bolt-On I-Line Circuit Breakers

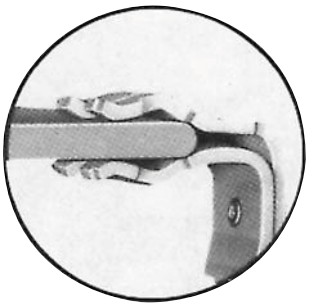

Plug-On Connector

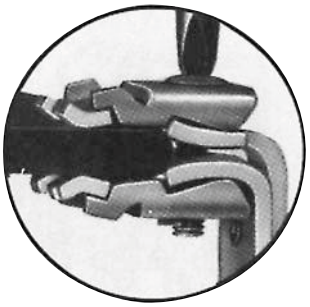

Bolted Connector

The standard I-Line circuit breaker is designed to provide a high quality, secure connection between the distribution bus and circuit breaker. I-Line circuit breakers use plug-on type line-side connectors. The parallel line-side connectors "clamp'' around the bus bars. In case of a short circuit, the increased magnetic flux causes the connectors to grasp the bus bars even tighter. I-Line circuit breakers with bolted connections have clamp-on jaws that are bolted around the main bus, as shown. The bolt-on I-Line design is offered as an alternative in order to meet specifications requiring a bolted connection. Bolt-on I-Line construction is available on FY, QB, QD, QG, QJ, Q4, FA, FH, FI, KI, LA, and LH frame circuit breakers and molded case switches, and SL100, SL225 and SL400 sub-feed lugs.

To order on all products except QB, QD, QG and QJ, simply add the letter "B'' in the catalog number prefix of the circuit breaker, e.g., FA36100 becomes FAB36100. For QB, QD, QG and QJ, insert the letter "E" in the third position, e.g., QBE, QDE, etc.

NOTE: Not available on Powerpact™ circuit breakers.

Top-Feed I-Line Circuit Breakers

I-Line panelboards may require the use of a top-feed I-Line circuit breaker in applications where a top-feed main circuit breaker is required. This involves having the I-Line jaw connectors on the OFF end of the circuit breaker, as opposed to the standard location on the ON end of the circuit breaker. To designate this construction, simply place the suffix "MT" at the end of the circuit breaker catalog number, e.g., FA36100 becomes FA36100MT. On LA or LH top-feed I-Line circuit breakers, accessories must be factory installed. This option is available in PowerPact™ H and J-frame by placing a "K" in the 4th position (termination indicator) of the circuit breaker catalog number, e.g., HGA36125 becomes HGK36125. This option is not available on L-frame (600 A only), M-frame, N-Frame or Powerpact M-, P- and R-frame.

"CBA" I-Line Jaw Configuration (Non-PowerPact Circuit Breaker)

Standard 1-pole and 2-pole I-Line circuit breakers are ordered by designating the required phase connection letters as a suffix to the circuit breaker catalog number. 3-pole circuit breakers do not require this phase designation and are supplied with an "ABC" phase jaw configuration as standard. In most applications this is acceptable since the phase loading is evenly distributed. In applications where the phases must be reversed it is possible to order a "CBA" jaw configuration by simply placing the letters "CBA" at the end of the standard catalog number, e.g., FA36100 becomes FA36100CBA.

Control Wire Tap Lugs

Control wire tap lugs are used in applications requiring connection to a small wire (22-14 AWG) for control circuits. This is accomplished by crimping the wire to a standard wire crimp terminal (not included) and fastening the terminal to the circuit breaker lug. On LA lugs, the lug is drilled to accept a 6-32 screw (included) to secure the crimp connector. On FA lugs, a flat slip-on crimp connector is used to attach to a shim-like connector placed under the circuit breaker lug.
Note: To order as a factory-installed device on FA, FH, FI, KI, Q4, LA, LH, LC, LI, LXI, LX or LC circuit breakers, add suffix number 8041 to circuit breaker catalog number, e.g., KIL362258041. To order as a factory-installed device on MG, MJ, PG, PJ, PL RG, RJ and RL use the product selector or the respective PowerPact catalog. Tapped lugs will be installed on the "ON" and "OFF" ends of the circuit breaker.

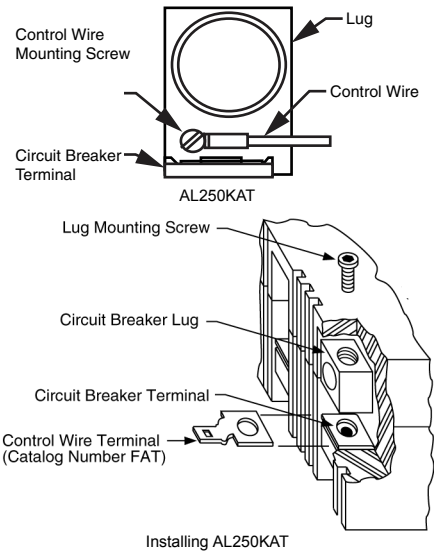

Installing AL250KAT

Table 3.44: Control Wire Terminations for Circuit Breakers

Circuit Breaker	Control Wire Termination Kits	
	Cat. No.	Standard Package Quantity
FA, FH	FAT *[1]*	1
Q4, LA, LH	AL400LAT	1
MA, MH, MX, ME	AL900MAT	1
	AL1000MAT	1
NA, NC, NX, NE	AL1200NE6T	1

Table 3.45: Tapped Lugs for PowerPact™ Circuit Breakers

Circuit Breaker	Amperes Max.	Kit Cat. No.	Standard Package Qty.
MG, MJ, PG, PJ, PL	800 A	AL800M23TK	3
		AL800P6TK	3
PG, PJ, PL	800 A	AL800M23TK4	4
		AL800P6TK4	4
	1200 A	AL1200P24TK	1
		AL1200P25TK	3
		AL1200P25TK4	4
RG, RJ, RL	1200 A	AL1200R53TK *[2]*	1

[1] Use fully-insulated 0.250 inch slip-on connectors.
[2] I-Line Only.

© 2017 Schneider Electric
All Rights Reserved
2/15/2017

Special Magnetic or Thermal Calibration

Magnetic

The magnetic trip ranges for standard circuit breakers are listed in the Square D Digest. Requirements outside this range are best accommodated by selecting another standard circuit breaker. In some cases where this is not practical, a circuit breaker may be ordered with special magnetic calibration. Special magnetic calibration is not possible in all cases. Circuit breakers with special magnetic calibration and an **adjustable** magnetic trip range are **not** UL Listed; those with a **fixed** magnetic trip setting are UL Listed. Consult Schneider Electric local sales office for more information.

50 Degrees C

UL 489 Listed molded case circuit breakers are calibrated for 40° C ambient temperature. To meet requirements of higher ambient conditions, circuit breakers can be factory calibrated for a 50° C ambient temperature. Circuit breakers with special thermal calibration are not UL Listed. To order 50° calibration, add “35” suffix to FA/FH/LA/LH or CA to H or J thermal magnetic circuit breaker. Consult local sales office for more information.

Rear-Connected Studs

Rear-connected studs are designed to allow rear termination in applications such as control panels where wire gutter space may be limited. The studs may be bolted directly to the bus or lugs may be attached to the studs.

NOTE: Long and short studs must be alternated on adjacent poles to assure proper electrical clearance

Rear-Connected Studs

Table 3.46: Rear-Connected Studs—Not UL Listed

Circuit Breaker Cat. No. Prefix	Ampere Ratings	Stud Cat. No.	Dimensions			
			Overall Length	To Back of Circuit Breaker	Diameter	Threads/Inch
FAL, FHL	15–100 A	FAS20	2-1/4 in.	2 in.	3/8 in.	16
FAL, FHL	15–100 A	FAS42	4-7/8 in.	4-1/4 in.	3/8 in.	16
LAL, LHL	125–400 A	LAS54	6-3/16 in.	5-1/2 in.	3/4 in.	16
LAL, LHL	125–400 A	LAS114	12-3/16 in.	11-1/2 in.	3/4 in.	16

NOTE: Use alternate size studs on adjacent poles to obtain proper electrical clearance.

Visi-Blade™ Circuit Breakers

Visi-blade construction is a modification to the cover of a thermal-magnetic circuit breaker, a molded case switch, or a Mag-Gard™ circuit breaker which provides a “window” through which the position of the movable contacts can be verified. Luminescent paint is applied to the movable contact arms to clearly indicate their position. Gases produced during high level interruption may cause clouding of the Visi-blade window. Visi-Blade circuit breakers listed below are UL Listed except for FH circuit breakers. Visi-Blade construction is not available on circuit breakers not included in table below.

Add suffix letter “V” to the circuit breaker catalog number, i.e., FAL 36100V.

Visi-Blade Circuit Breaker

Table 3.47: Available Visi-Blade Circuit Breakers

Circuit Breaker Prefix	Amperes
FA, FH *[3][4]*	15–100 A
LA, LH	125–400 A

Moisture and Fungus Resistant Treatment for Circuit Breakers

This treatment covers the application of moisture and fungus resistant varnish to circuit breakers and molded case switches.

- The varnish meets Military Specification MIL-V-173C VARNISH, MOISTURE AND FUNGUS RESISTANT.
- The treatment meets military Specification MIL-T-152E TREATMENT, MOISTURE AND FUNGUS-RESISTANT, OF COMMUNICATIONS, ELECTRONIC, AND ASSOCIATED ELECTRICAL EQUIPMENT.

The treatment of circuit breakers in accordance with said specifications is intended to protect them against the moisture and fungus condition encountered in service by retarding the absorption of moisture and inhibiting the growth of fungi.

To order for F- and L-frame circuit breakers, place the suffix “FT” at the end of the circuit breaker catalog number, e.g., FAL36100 becomes FAL36100FT. To order for QB, QD, and QG circuit breakers, place the suffix “YF” at the end of the circuit breaker catalog number, e.g., QDL32150 becomes QDL32150YF. ED, EG, EF, GJL, PowerPact™ D-, H-, J-, M-, P- and R-frame circuit breakers are inherently fungus resistant and need no further treatment.

[3] FH circuit breaker is not UL Listed.
[4] Not available on 1P FA/FH circuit breakers.

© 2017 Schneider Electric
All Rights Reserved

Short Handle for LA/LH Circuit Breakers

Certain applications of the LA/LH circuit breakers (as mains in particular panelboards) require the use of a slightly shorter operating handle. For ordering information refer to the chart below.

Table 3.48: Catalog Numbers for Short Handle LA/LH CIrcuit Breakers

Lug Configuration Desired		Catalog "Prefix Indication"	Catalog "Suffix Indication"	Circuit Breaker Cat. No.
ON End	OFF End			
Lugs	Lugs	"L"	"MB"	LAL36400MB
No Lugs	Lugs	"P"	"MB"	LAP36400MB
Lugs	No Lugs	"P"	"MT"	LAP36400MT
No Lugs	No Lugs	"F"	"MB"	LAF36400MB

© 2017 Schneider Electric
All Rights Reserved
2/15/2017

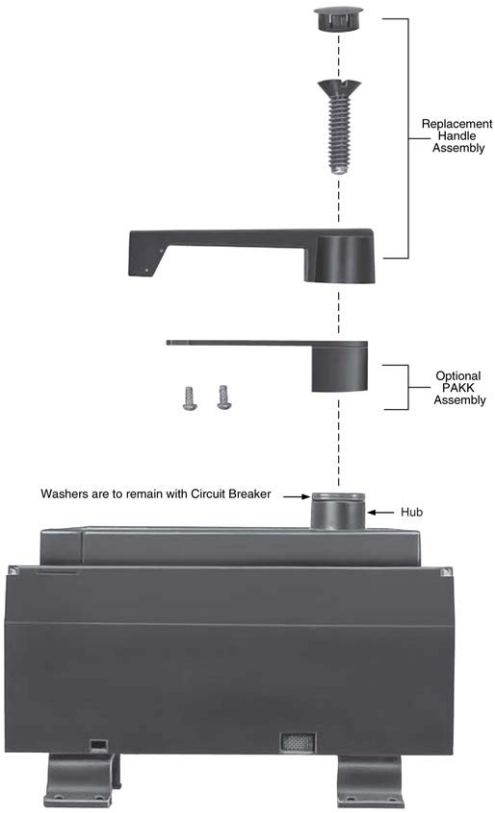

Circuit Breaker with Handle Removed

P-Frame Replacement Handle

NOTE: The "hub" under normal conditions is insulated. When the phenolic handle is removed, a label is exposed warning of the hub being energized. That can only happen if a short circuit or severe overload occurs. The ionized gasses inside the circuit breaker could momentarily (1-2 cycles) put a high voltage potential on the hub.

Replacement handle assemblies for PA, PC, PE, PX and PH circuit breakers (produced after March 1975) are available.

Table 3.49: P-Frame Replacement Handle

Circuit Breaker Cat. No. Prefix	Replacement Handle Cat. No.
PAF, PAE, PHF, PHE, PCF, PEC, PEF, PXF	HRPA

P-Frame Key Interlock Adapter Plate

PAKK Kit – An adapter plate that is added under the circuit breaker handle to allow mechanical interlocking with a key interlock (not included). The kit includes all the necessary hardware to mount onto the circuit breaker handle.

Table 3.50: P-Frame Key Interlock Adapter Plate

Cat. No.
PAKK

Exchange Guarantee Prices, Permanent Trip Molded Case Circuit Breakers

When a Square D permanent trip circuit breaker is supplied to meet a specification requiring an interchangeable trip unit, it may be exchanged for another circuit breaker of the same type with a different trip setting.

When entering an order for the replacement circuit breaker:

- Reference "Exchange Price Guarantee" as a line item marking on the replacement order. The replacement order will be billed at normal authorized selling net price.
- Request Return Material Authorization referencing "Exchange Price Guarantee" and the replacement exchange price guarantee invoice number.

When the circuit breaker is returned to Cedar Rapids, credit will be issued for the difference between the replacement net price billed and the exchange list price (from the table below) times the same multiplier used on the replacement order. The list price used to determine credit will be based on the highest trip setting of the circuit breakers involved in the exchange.

Only those circuit breaker types below are eligible for this exchange guarantee program.

Table 3.51: Exchange Guarantee Circuit Breakers

Circuit Breaker Type	Trip Range
LA	All
LH	All
LC	All

Lug Deletion

In some applications, the circuit breaker does not require lugs on one or both ends. To meet this requirement, the circuit breaker should be ordered with the desired lug configuration as indicated below. If necessary, lugs may be removed in the field. However, if lugs are removed in the field, circuit breaker **Types** FH, FC, Q4 LA and LH must be secured with pan-mounting screws, or have "P" screws (cover screws and nuts) installed securing the base to the cover.

Table 3.52: Lug Configuration *[5]*

ON End	OFF End	Circuit Breaker Prefix – Suffix
Lugs	Lugs	"L" (e.g., FA*L*36100)
No Lugs	No Lugs	"F" (e.g., FA*F*36100)
No Lugs	Lugs	"P" (e.g., FA*P*36100)
Lugs	No Lugs	"P – MT" *[6]* (e.g., FA*P*36100*MT*)

[5] See information on termination kits below
[6] MT suffix also required (except for PowerPact™).

© 2017 Schneider Electric
All Rights Reserved

Termination Insert Kits

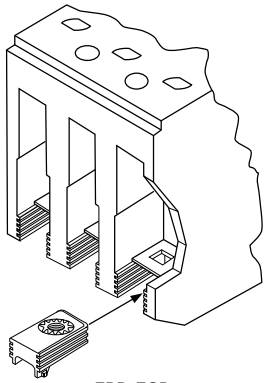

EDB, EGB,
EJB, FJA

The standard lugs supplied with EDB, EGB, EJB, and FJA circuit breakers and molded case switches are secured by means of a screw fastened through the circuit breaker terminal into the lug body. If the standard lug is removed and a bolted connection to the circuit breaker terminal pad is desired, a threaded insert kit is required. The insert is installed below the terminal pad. For ordering information see chart below.

Table 3.53: Termination Kit Inserts

Kit Cat. No.	Inserts Per Kit	Circuit Breakers
TIKFD	3	EDB, EGB, EJB, FJA

Electric Joint Compound

Joint Compound

I-Line™ circuit breakers, I-Line busway plug-on units, I-Line panelboards and switchboards, QMB plug-on switches and motor control center plug-on units are supplied with factory applied joint compound on the plug-on connectors. The compound should not be removed because it contributes to the overall performance of the connection. Whenever one of these units is removed and reinstalled, the joint compound should be reapplied. Catalog number PJC 7201 is a two-ounce container of compound specially formulated for the I-Line, QMB and motor control center connections.
No other type of commercially available joint compound should be used.

Table 3.54: Electric Joint Compound

Use With	Cat. No.
I-Line Circuit Breakers, QMB Plug-On Units, or Model-V MCC Units	PJC7201
SED Drawout Circuit Breakers	PJC8311

© 2017 Schneider Electric
All Rights Reserved
2/15/2017

Circuit Breakers for Grounded B-Phase (BØ) (Corner-Grounded Delta) Systems

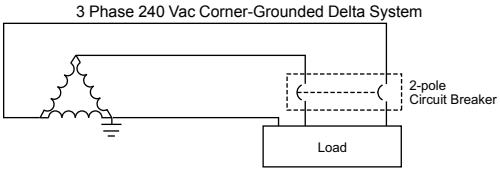

- For use on 480 V systems, FH and LH type circuit breakers must be ordered as 600 V versions and with a 5861 suffiix (i.e. FHL361005861).
- For use on 240 V systems, FH type circuit breakers may be ordered as 480 V versions with a 5861 suffix (i.e. FHL341005861).
- FA and LA type circuit breakers are not available with grounded B phase markings.
- Two-pole 240 V grounded B-phase circuit breakers (except EDB, EGB, EJB, QB, QD, QG, and QJ) will be built using three-pole modules.
- Two-pole grounded BØ circuit breakers will be labeled with 240 Vac interrupting ratings.
- No self-certification is available for interrupting ratings greater than shown in the tables below.

Table 3.55: Application Data for 240 Vac 3Ø Corner-Grounded Delta System

Cat. No. Prefix	Poles	UL Listed Interrupting Rating	
		Ampere Rating	240 Vac Interrupting Rating
QO-H, QOB-H	2	15–100 A	5 kA
QB, QD, QG, QJ	2 *[7]*	70–250 A	10 kA
EDB, EGB, EJB	2 *[7]*	15–125 A	18 kA, 35 kA, 65 kA
HD, HG, HJ, HL	2 *[7]*	15–150 A	42 kA, 42 kA, 65 kA, 100 kA
JD, JG, JJ, JL	2 *[8]*	150–250 A	
FH, FHL	2 *[8]*	15–100 A	42 kA
LH, LHL	2 *[8]*	125–400 A	30 kA
MG, MJ Electronic Trip Unit	2 *[8][9]*	300–800 A	65 kA
PG, PJ, PK, PL Electronic Trip Unit	2 *[8][9]*	600–1200 A	65 kA
RG, RK Electronic Trip Unit	2 *[8][9]*	1200–2500 A	35 kA, 65 kA
RJ Electronic Trip Unit	2 *[8][9]*	1200–2500 A	100 kA
RL Electronic Trip Unit	2 *[8][9]*	1200–2500 A	125 kA

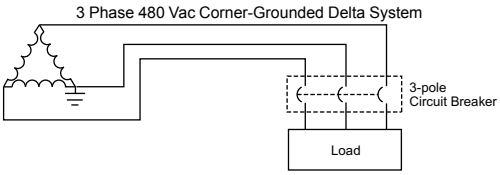

NOTE: Three-pole circuit breakers must be used on three-phase 480 V corner-grounded delta systems. The outside poles are to be connected to the ungrounded phase and the grounded conductor connected to the center pole. Connecting the circuit breaker in a manner other than that described or shown may result in an unsafe application of the circuit breaker.

Table 3.56: 480 Vac 3Ø Corner-Grounded Delta System

Cat. No. Prefix	Poles *[10]*	UL Listed Interrupting Rating *[10]*	
		Ampere Rating	480 Vac Interrupting Rating
HD, HG, HJ, HL	3	15–150 A	18 kA, 35 kA, 65 kA, 100 kA
JD, JG, JJ, JL	3	150–250 A	
FH, FHL	3	15–100 A	10 kA
LH, LHL	3	125–400 A	14 kA
LD, LG, LJ, LL Electronic Trip Unit	3	250–600 A	18 kA, 35 kA, 65 kA, 100 kA
MG, MJ Electronic Trip Unit	3 *[9]*	300–800 A	35 kA
PG, PK Electronic Trip Unit	3 *[9]*	600–1200 A	35 kA, 50 kA
PG, PK Micrologic Trip Unit	3 *[9]*	250–1200 A	
PJ, PL Electronic Trip Unit	3 *[9]*	600–1200 A	65 kA, 100 kA
PJ, PL Micrologic Trip Unit	3 *[9]*	250–1200 A	
RG, RJ, RK RL Electronic Trip Unit	3 *[9]*	1200–2500 A	35 kA, 65 kA, 65 kA,100 kA
RG, RJ, RK, RL Micrologic Trip Unit	3 *[9]*	600–2500 A	
NT	3	800–1200 A	100 kA
NW	3	800–6000 A	150 kA

[7] Standard labeling includes grounded B phase.
[8] Built using 3P module.
[9] Electronic = ET1.0 Electronic Trip System
Micrologic = 3.0, 5.0, 3.0A, 5.0A, 6.0A, 5.0P, 6.0P, 5.0H and 6.0 H Micrologic Trip System.
[10] The grounded phase should be connected through the center pole only.

© 2017 Schneider Electric
All Rights Reserved

For use on vessels over 65 ft. (19.8 m) in length.

UL Marine Listed/CSA Certified Circuit Breakers (UL 489 Supplement SA)

PowerPact H and J circuit breakers with thermal magnetic trip units meet the UL 489 SA requirements on vessels of any length under or over 65 ft. (19.8m). PowerPact H, J, and L circuit breakers with Micrologic trip units meet the UL 489 Supplement SA requirements for use on vessels over 65 ft. (19.8m) in length. Marine circuit breakers must not use aluminum or aluminum alloys for terminal connections and must be calibrated at an ambient temperature of 104°F (40°C). Standard circuit breakers should not be specified or used in place of marine rated circuit breakers.

Circuit breakers can be ordered with the Marine SA listing by adding the suffix “YA” (marine) to the catalog number.

Table 3.57: Circuit Breakers for Marine Applications

Cat. No. Prefix	Poles	Ampere Rating	Application	Cat. No.
FA, FAL	2	15–100 A	For use only on vessels over 65 feet (19.8 m) in length.	Add the number “9” after the catalog number prefix of the standard circuit breaker catalog number. Example: Standard FAL36100 Marine FAL936100
	3	15–100 A		
FH, FHL	2, 3	15–100 A		
LA, LAL	2, 3	125–400 A		
LH, LHL	2, 3	125–400 A		
PowerPact™ HD, HG, HJ, HL *[11]*	2, 3	15–150 A	For use on vessels over and under 65 feet (19.8 m) in length.	Add suffix “YA” after the standard circuit breaker catalog number. Example: Standard HGL36100 Marine HGL36100YA
PowerPact JD, JG, JJ, JL *[11]*	2, 3	150–250 A		
PowerPact HD, HG, HJ, HL, HR *[12]*	2, 3	15–150 A	For use on vessels over 65 feet (19.8m) in length.	
PowerPact JD, JG, JJ, JL, JR *[12]*	2, 3	150–250 A		
PowerPact LD, LG, LJ, LL, LR	3, 4	250–600 A		
PowerPact MG, MJ	2, 3	300–800 A	For use only on vessels over 65 feet (19.8 m) in length.	
PowerPact PG, PJ, PL	2, 3, 4	100–1200 A		
PowerPact RG, RJ, RL	2, 3, 4	600–2500 A		

UL Naval Listed/CSA Certified Circuit Breakers (UL 489 Supplement SB)

PowerPact H, J, and L circuit breakers with Micrologic trip units meet the UL 489 Supplement SB requirements for naval vessels. These circuit breakers are subject to various vibration testing as described in UL 489 Supplement SB. Naval circuit breakers must not use aluminum or aluminum alloys for terminal connections and are calibrated at an ambient temperature of 122°F (50°C). Standard circuit breakers should not be specified or used in the place of naval rated circuit breakers.

Circuit breakers can be ordered with the Naval SB listing by adding the suffix “YA1” (naval) to the catalog number.

Table 3.58: Circuit Breakers for Navel Applications

Cat. No. Prefix	Poles	Ampere Rating	Application	Cat. No.
HD, HG, HJ, HL *[13]*	2, 3	15–150 A	For use on non-combat and auxiliary navalships of any length.	Add suffix “YA1” after the standard circuit breaker catalog number. Example: Standard HGL36100 Marine HGL36100YA1
JD, JG, JJ, JL *[13]*	2, 3	150–250 A		
LD, LG, LH, LL	3,4	250–600 A		

[11] Thermal-Magnetic trip units only.
[12] Micrologic trip units only.
[13] With Micrologic trip units only thermal-magnetic circuit breakers not approved.

© 2017 Schneider Electric
All Rights Reserved
2/15/2017

Electrical Accessories

Table 3.59: Electrical Accessories

Accessory	Description		Rated Voltage		G-Frame Field-Installable Cat. No.
Auxiliary and Alarm Switches (OF, SD, SDE) G-Frame	Provides circuit breaker contact status. NOTE: The location of the accessory in the circuit breaker determines its function.	Standard Min Load = 10mA with 24V	1 auxiliary switch (OF) 1a1b		AAC
			2 auxiliary switch (OF) 2a2b		—
			3 auxiliary switch (OF) 3a3b		—
			Alarm Switch (SD) 1a1b		AAC
			Overcurrent Trip Switch (SDE) 1a1b		—
			Consisting of:	OF Switch	—
				SDE Adapter	—
			Alarm Switch and Overcurrent Trip Switch		—
			Consisting of:	OF Switch	—
				SDE Adapter	—
			Auxiliary Switch/Alarm Switch/Adapter (OF/SD/SDE) Kit		—
		Low Level Min Load = 1mA with 24V	One auxiliary switch (OF) 1a1b		—
			Two auxiliary switches (OF) 2a2b		—
			3 auxiliary switches (OF) 3a3b		—
			Alarm Switch (SD) 1a1b		—
			Overcurrent Trip Switch (SDE) 1a1b		—
			Consisting of:	OF Switch	—
				SDE Adapter	—
			Alarm Switch and Overcurrent Trip Switch		—
			Consisting of:	OF Switch	—
				SDE Adapter *[1]*	—
Shunt Trip (MX) G-Frame	Trips the circuit breaker from a remote location by means of a trip coil energized from a separate supply voltage circuit.		AC	24	—
				48	—
				120	GSA
				110/130	—
				208	GSB
				240	GSC
				200/250	—
				277	GSD
				208/277	—
				480	GSH
				380/480	—
				525/600	—
			DC	12	—
				24	GSO
				30	—
				48	GSP
				60	—
				125	GSR
				250	GSS
Undervoltage Trip G-Frame	Instantaneously opens the circuit breaker when the under-voltage trip supply voltage drops to a value between 35% and 70% of its rated voltage. Closing is allowed when the supply voltage of the undervoltage trip reaches 85% of rated voltage.		AC	24	—
				48	—
				120	GUA
				110/130	—
				208	GUB
				240	GUC
				200/250	—
				277	GUD
				208/277	—
				480	GUH
				380/480	—
				525/600	—
			DC	12	—
				24	GUO
				30	—
				48	GUP
				60	—
				125	GUR
				250	GUS

[1] SDE Adapter used for H- and J-frame only.

© 2017 Schneider Electric
All Rights Reserved

Auxiliary Switch Contact Configuration
Color Code:
"A" Contact - Yellow Leads
"B" Contact - Blue Leads
Common-Striped Leads

1A/1B

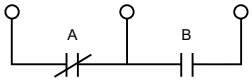

Circuit Breaker Closed

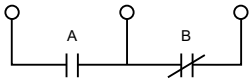

Circuit Breaker Open or Tripped

1A Alarm Switch Configuration
Color Code: Red Leads

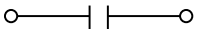

Circuit Breaker Open or Closed

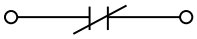

Circuit Breaker Tripped

1B Alarm Switch Configuration
Color Code: Red Leads

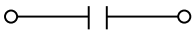

Circuit Breaker Tripped

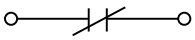

Circuit Breaker Open or Closed

Factory-Installed Electrical Accessories

Electrical accessories are available on all molded case circuit breakers except FY and QOM1 circuit breakers.

- Alarm switch is the only accessory available for the 1-pole FA circuit breaker.
- Combination accessories may be ordered by description, i.e., 1021 and 1212.
- All AC electrical accessories shown below are rated for 50/60 Hz.
- See page 3-23 for field-installable accessories. See Digest Section 7 for PowerPact™ circuit breaker accessories.

Table 3.60: Factory-Installed Accessories for Thermal-Magnetic Circuit Breakers

Accessory	Description		Rated Voltage	Coil Burden [2]	Suffix
Shunt Trip	Trips the circuit breaker from a remote location by means of a trip coil energized from a separate circuit. A 120 V shunt trip will operate at 55% or more of rated voltage. All other shunt trips will operate at 75% or more of rated voltage. **Application** • For use with momentary or maintained push button • Sure Trip Capacitor Unit requires 48 Vdc shunt trip • Leads: (2) Black.18 AWG Cu		24 Vac	21 VA	-1042 [3]
			120 Vac	24 VA	-1021 [4]
			208 Vac	107 VA	-1021
			240 Vac	154 VA	-1021
			277 Vac	14 VA	-1037 [3]
			480 Vac	45 VA	-1037 [3]
			24 Vdc	36 VA	-1027
			48 Vdc	36 VA	-1028
			125 Vdc	44 VA	-1029
			250 Vdc	15 VA	-1030 [5]
Ground-Fault Shunt Trip	Trips the circuit breaker electrically using the signal from a Micrologic™ Ground-Fault Module. **Application** • For use only with obsolete GP Ground-Censor™ system or add on ground-fault module • Leads: (2) Orange 18 AWG Cu		—	—	-G [5]
Undervoltage Trip (UVR)	Trips the circuit breaker electrically when a control circuit falls below 35 to 70% of nominal (not field adjustable). Picks up at 35–85% of nominal voltage. **Application** • UVR must be energized in order to close the circuit breaker • Leads: (2) Brown 18 AWG Cu leads		24 Vac 120 Vac 240 Vac 24 Vdc 48 Vdc	5 VA 8 VA 8 VA 2 VA 3 VA	-1143 [5] -1121 -1124 -1127 -1128
Time Delay Unit	Provides adjustable time delay for UVR of 0.1 to 0.6 second before circuit breaker trips. **Application** • For use only with -1121 UV trip • Adjustable time delay (0.1 to 0.6 second) • I-Line unit requires 1.5 in. (38 mm) of mounting space • Leads: (2) Brown 18 AWG Cu and (2) Black/White 18 AWG Cu		120 Vac	Cat. No. Unit Mt. 690UVTD	Cat. No. I-Line™ 690UVTDI
Auxiliary Switches	Monitors circuit breaker contact status and provides a remote signal indicating the circuit breaker contacts are OPEN or CLOSED. **Application** • Max. Load = FA, FH, FI, LC, LE, LI, LX, LXI 10 A @ 125–250 Vac, ¼ hp @ 125–250 Vac, 5 A @ 30 Vdc • Leads: Yellow for "A", Blue for "B", Striped for common 18 AWG Cu	1A/1B 2A/2B 3A/3B	See load info. in App. text at left	See load info. in App. text at left	-1212 -1352 -1364 [6]
Alarm Switches	Used with control circuits and actuated only when the circuit breaker has tripped. Standard construction includes a normally-open contact. **Application** • Max. Load = 10 A @ 125–250 Vac • Max. Load = 15 A @ 30 Vdc • Leads: (2) Red 18 AWG Cu	1A 1A 1B 1B	250 Vac 28 Vdc 250 Vac 48 Vdc	See load info. in App. text at left	-2100 -2100 -2103 -2103

Undervoltage Trip Wiring Diagram

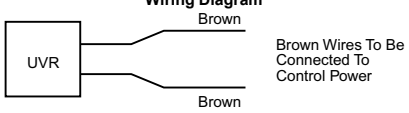

Shunt Trip Wiring Diagram

690UVTD Wiring Diagram

[2] Coil burden values do not apply to LC, LE, LI, LX and LXI. Consult Field Sales office for more information.
[3] Not available on FI or KI circuit breakers.
[4] LC, LE, LI, LX, and LXI circuit breakers operate at 75% or more of rated voltage.
[5] Not available on LC, LE, LI, LX, LXI circuit breakers.
[6] Not available in FA, FC, FH, FI and KI circuit breakers.

© 2017 Schneider Electric
All Rights Reserved

Auxiliary Switch Contact Configuration

Color Code:
"A" Contact - Yellow Leads
"B" Contact - Blue Leads
Common-Striped Leads

1A/1B

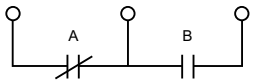

Circuit Breaker Closed

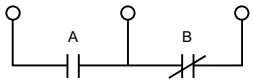

Circuit Breaker Open or Tripped

1A Alarm Switch Configuration

Color Code: Red Leads

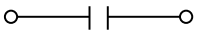

Circuit Breaker Open or Closed

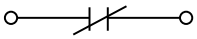

Circuit Breaker Tripped

1B Alarm Switch Configuration

Color Code: Red Leads

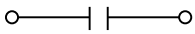

Circuit Breaker Tripped

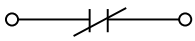

Circuit Breaker Open or Closed

Undervoltage Trip Wiring Diagram

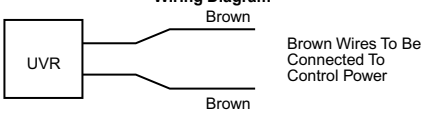

Shunt Trip Wiring Diagram

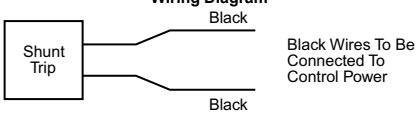

Field-Installable Electrical Accessories

Complete field-installable accessory catalog number by inserting suffix from page 3-22between the parentheses in the catalog numbers shown in the table below. (Example: LA11212)

Table 3.61: Field-Installable Accessories for Thermal-Magnetic and Electronic Trip Circuit Breakers

Circuit Breaker	Shunt Trip	Ground-Fault Shunt Trip *[7]*	Undervoltage Trip	Auxiliary Switches	Alarm Switch
Miniature Circuit Breakers EH and EH-PL	Factory-Installed Only	Not Available	Not Available	Factory-Installed Only	Factory-Installed Only
FA, FH	Factory-Installed Only	Factory-Installed Only	Factory-Installed Only	Factory-Installed Only	Factory-Installed Only
LA, LH Series 4 *[8]*	LA1( )	LA1G	LA1 ( )	LA1( )	Factory-Installed Only Right Pole
Q4	LA1( )	LA1G	LA1 ( )	LA1( )	Factory-Installed Only Right Pole

Table 3.62: Accessory Mounting Locations

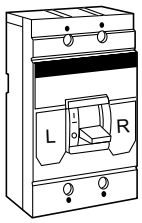

LA, LH, Q4 Series 4 circuit breakers or newer = Field-installable accessories
LC, LI, LX, LXI circuit breakers = Field-installable accessories
Both accessory ports will accept shunt trips, UVRs and auxiliary switches. Alarm switches are factory installable **only** (right pole). Maximum of one device per port.

[7] Used with obsolete GP Ground-Censor™ system or add-on ground-fault modules.
[8] With LA and LH top-feed circuit breakers (suffix MT, I-Line jaws on OFF end) all accessories must be factory installed.

© 2017 Schneider Electric
All Rights Reserved

KAMO2120AC
with KIL Circut Breaker

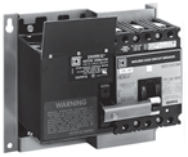

FAMO1 and FAMOP
with FAL Circuit Breaker

Electrical Operators

Provides remote ON, OFF/RESET control of molded case circuit breakers.

- A complete line of field-installable electrical operators.
- Installing side mounted motor operators on non I-Line™ circuit breakers requires the use of a separate mounting pan.
- Side mounted electrical operators require an additional 4-1/2 in. (114 mm) of mounting space in I-Line installations.

When remote indication of circuit breaker status is required, order circuit breaker with 1A-1B auxilliary switch for ON-OFF Indication and alarm switch for TRIP Indication. Electrical operators require SPDT maintained contact switch. Refer to Class 9001 control unit listing for operators and pilot lights.

NOTE: Not available on Mag-Gard™ circuit breakers and molded case switches.

Table 3.63: Electrical Operators

Circuit Breaker Prefix	Top Mount		Side Mount		Mounting Pan Cat. No.
	Voltage	Cat. No.	Voltage	Cat. No.	
FA, FH	—	—	120 Vac	FAMO1	—
FAL, FHL	—	—	120 Vac	FAMO1	FAMOP
LA, LH, Q4	—	—	120 Vac	LAMO1	—
LAL, LHL, Q4L	120 Vac	LAMO2120AC	120 Vac	LAMO1	LAMOP
	240 Vac	LAMO2240AC			
	24 Vdc	LAMO224DC			
	125 Vdc	LAMO2125DC			
MAL, MHL	120 Vac	MAMO2120AC	120 Vac	MAMO1	MAMOP
	240 Vac	MAMO2240AC			
	24 Vdc	MAMO224DC			
	125 Vdc	MAMO2125DC			
PA, PH, PC, PE, PX	120 Vac	PAMO2	—	—	—

Handle Accessories

Table 3.64: Handle Accessories

Circuit Breaker Prefix	Poles	Cat. No.
Handle Tie		
(2) FA	3	FKHT
2 LA or 2 Q4	2, 3	LAHT
California Title 24 Comb. Handle Tie and Lock Off		
FY FA	(3) 1P (3) 1P	FY3HT FA3HT
Handle Extension		
Q4	2, 3	AHEXLI
Handle Padlock Attachment (locks ON or OFF)		
FY Series 1	1	HPAFYQ
FA, FH	1, 2, 3	HPAFK
FY Series 2	2, 3	HPAFK
LA, LH, Q4	2, 3	HPALM HPAXLM

Interlocks

Table 3.65: Walking Beam Mechanical Interlock Components [9]

Circuit Breaker Prefix	Manually Operated			Electrically Operated		
	Operator Suffix	Walking Beam Ass'y. Cat. No.	Mounting Pan Cat. No.	Operator Suffix	Walking Beam Ass'y. Cat. No.	Mounting Pan Cat. No.
FAL, FHL	WB	FA4WB	FAWBP4	WBMO	FA9WB	FAWBP9
LAL, LHL	WB	LA6WB	LAWBP6	WBMO	LA10WB	LAWBP10

Walking Beam Mechanical Interlock
Requires 2 circuit breakers with WB suffix,
1 walking beam assembly and 1 mounting pan.

[9] Fully enclosed interlocked units are available in Type 1 and Type 3R enclosures, with two neutrals provided in each enclosure. The completely enclosed assembly is not UL Listed. Please consult your nearest Schneider Electric sales office for more information.

© 2017 Schneider Electric
All Rights Reserved
2/15/2017

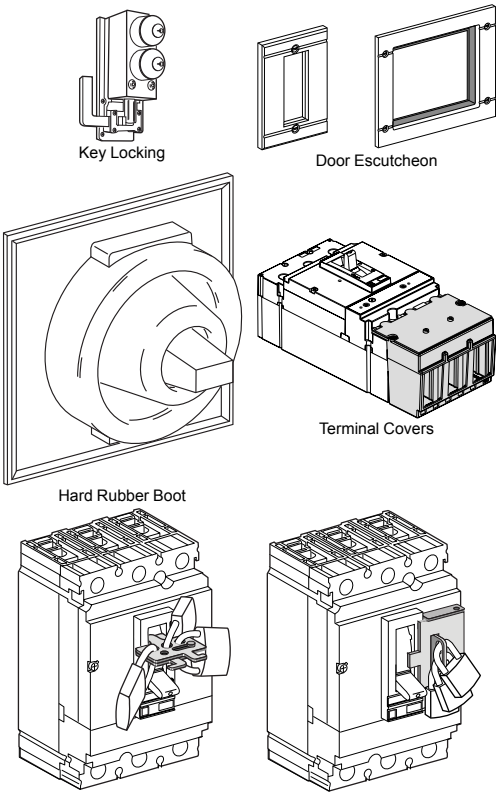

Locks, Installation Accessories, and Rear Connections

Table 3.66: Locks, Interlocking

Device	Description	G-Frame Field-Installable Cat. No.
Handle Padlocking Device	Removable (lock OFF only)	AHP
	Fixed (lock OFF or ON)	—
	Fixed (lock OFF only)	—
Interlocking (Not UL listed)	Mechanical for circuit breakers with rotary handles	—
	Mechanical for circuit breakers with toggles	—
Key Locking	Ronis	—
	Profalux	—

Provision and 2 locks keyed alike

Table 3.67: Installation Accessories for G- and D-Frame Circuit Breakers

Description	G-Frame Field-Installable Cat. No.
Front Panel Escutcheon for Toggle Circuit Breakers	—
Front Panel Escutcheon for Rotary Handle, Motor Operator, or extended escutcheon	—
Phase Barriers (set of 6)	—
Handle Rubber Boot	—
Sealing Accessories	ACS
DIN rail adapter	GYR
Toggle Extensions (set of 10)	—

Cylinder Lock

Used to lock the circuit breaker in the OFF position. Circuit breaker cannot be reset when locked OFF.

Table 3.68: Cylinder Lock

Circuit Breaker Prefix	Factory Installed Suffix	Field-Installable Cat. No.
FA, FAL, FH, FHL *[10]*	—CL	Factory-installed only
LA, LAL, LH, LHL, Q4	Field-installable only	LA1CL

Miscellaneous Accessories

Table 3.69: Terminal Shields and Phase Barriers

Used With	Description				Cat. No.	Qty Per Kit
G-Frame	Terminal Shield (3P)	—	—	—	GYT	1

[10] Not available on Mag-Gard circuit breakers and molded case switches.

© 2017 Schneider Electric
All Rights Reserved

AL50FA

AL100FA

AL250KA

AL400LA

AL600LI5

AL400LH7

Mechanical Lug Kits

Table 3.70: Mechanical Lug Kit Information

Circuit Breaker Application				(Number of Wires Per Lug) Wire Range*[11]*	Cat. No.	Lugs Per Kit
Standard	Ampere Rating	Optional	Ampere Rating			
Al Lugs for Use with Al or Cu Wire						
FA, FH	15–30 A	FA, FH	35–100 A	(1) 14–4 AWG Cu or (1) 12–4 AWG Al	AL50FA	3
FC	35–100 A	FC	15–30 A	(1) 14–3 AWG Cu or (1) 12–1 AWG Al	AL100FA4	3
FA, FH	35–100 A	FA, FH	15–30 A	(1) 14–1/0 AWG Cu or (1) 12–1/0 AWG Al	AL100FA	3
—	—	FA, FH, FC	15–100 A	(1) 12–3 AWG Cu	AL100TF *[12]*	3
—	—	FA	150 A (only)	(1) 2–3/0 AWG	AL150FA	3
Q4, LA, LH	125–400 A	—	—	(1) 1 AWG–600 kcmil or (2) 1 AWG–250 kcmil	AL400LA	1
—	—	Q4, LA, LH	125–400 A	(1) 350–750 kcmil	AL400LH7	1
Cu Lugs for Use with Cu Wire Only *[13]*						
FC	15–30 A	—	—	(1) 14–10 AWG Cu	CU30FA4	3
—	—	FA, FH, FC	15–100 A	(1) 12–3 AWG Cu	CU100TF *[12]*	3
—	—	FA, FH, FC	15–100 A	(1) 14–1 AWG Cu	CU100FA	3
—	—	Q4, LA, LH	125–400 A	(1) 1 AWG–600 kcmil Cu or (2) 1 AWG–250 kcmil Cu	CU400LA	1

[11] Unless otherwise specified, wire sizes apply to both aluminum and copper conductors.
[12] For use in the OFF end only, when the OFF end is the load end.
[13] Use suffix 8002 for factory-installed Cu lugs.

© 2017 Schneider Electric
All Rights Reserved
2/15/2017

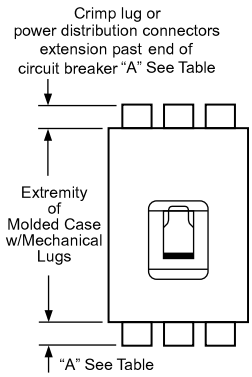

CVC600MA5

Compression Lug Kits

Table 3.71: Field-installable Compression Lug Kits *[14]*

Circuit Breaker Type	Wire Range *[15]*	Dimension A (In)	Max. Lugs Per Terminal	Cat. No.	Lug Qty. Per Kit
Aluminum Compression Lug Kits					
FA, FH, FC	8–1/0 AWG	1.3	1	VC100FA	3
LA, LH, Q4	250–350 kcmil	1.25	2	VC400LA35	2
	4 AWG–300 kcmil	1.0	2	VC400LA3	2
	2/0 AWG–500 kcmil	2.2	1	VC400LA5	1
	500–750 kcmil	2.5	1	VC400LA7	1
Copper Compression Lug Kits					
FA, FH, FC	6–1/0 AWG Cu	1.4	1	CVC100FA	3
LA, LH, Q4	2/0 AWG–300 kcmil Cu	1.3	2	CVC400LA3	2
	250–500 kcmil Cu	2.3	1	CVC400LA5	1

Power Distribution Connectors (PDC) for Circuit Breakers—for Field Replacement of Mechanical Lugs

Can be used for multiple load connections on one circuit breaker. Use in place of standard distribution blocks to save space and time.

Field-installable kits, including tin-plated aluminum connectors and all necessary mounting hardware are available for Square D FA, LA and Q4-frame molded case circuit breakers.

Connectors are UL Listed:

- For use on load end of circuit breaker only
- For use in UL508 Industrial Control applications only
- For use in UL 1995/CSA C22.2 No. 236 heating and cooling equipment
- For copper wire only

PDC12LA4

Table 3.72: PDC Lugs

Use With Circuit Breaker *[16]*	Circuit Breaker Ampere Rating	Wires Per Terminal & Wire Range *[17]* Cu	Cat. No.	Lug Quantity Per Kit	Dimension A (in.)
FAL, FHL, FCL *[18]*	15–100 A	(6) 14–6 AWG	PDC6FA6	3	1.0
		(3) 14–2 AWG	PDC3FA2	3	1.2
LAL, LHL, Q4L	125–400 A	(6) 12–2/0 AWG	PDC6LA20	1	2.25
		(12) 14–4 AWG	PDC12LA4	1	1.25
		(3) 14–2 AWG (1) 2 AWG–250 kcmil	PDC4LA250	1	2.0

[14] See instruction bulletins for recommended tools.
[15] Unless otherwise specified, wire sizes apply to both aluminum and copper conductors.
[16] Not for use with I-Line circuit breakers.
[17] When using fine stranded wire, increased cross sectional area may cause maximum wire size to be reduced.
[18] OFF end only when OFF end is the load end.

© 2017 Schneider Electric
All Rights Reserved

Table 3.73: Restraint Interface Module (RIM)

Cat. No.	Voltage
S48890	120 Vac/24 Vdc
S48895	240 Vac/24 Vdc

S48890 and S48895 Restraint Interface Modules

The Restraint Interface Module (RIM) is used to allow zone-selective Interlocking communications between circuit breakers with Micrologic™ Series B trip units or Micrologic™ #.0x trip units, Compact™ STR53 trip units, Masterpact™ STR58 trip units, Federal Pioneer USRC and USRCM trip units, and Square D GC series ground-fault relays.

Upstream circuit breakers with Micrologic 3.0A, 5.0A 5.0P, 5.0H, 6.0A, 6.0P, and 6.0H trip units can receive up to 15 input signals without requiring a restraint interface module. If the number of input signals exceeds 15, then a RIM is required. Contact your local Sales Office for RIM requirements.

The restraint interface module operates on either 120 Vac/24 Vdc, or 240 Vac/24 Vdc, 50/50 Hz.

NOTE: The maximum distance between devices is 1000 ft. (305 m)

Table 3.74: RIM Requirements

Upstream Device (receives input from RIM) Downstream Device (sends output to RIM)	Micrologic #.0x Trip Units	Square D Micrologic Series B Trip Units	Square D GC-100 Ground-Fault Relay for Equipment Protection	Square DGC-200 Ground-Fault Relay for Equipment Protection	Merin Gerin STR58 Trip Units	Federal Pioneer USRC and USRCM Trip Units
Micrologic #.0x Trip Units	15	R	R	15	15	R
Square D Micrologic Series B Trip Units	R	26	R	R	R	15
Square D GC-100 Ground-Fault Relay for Equipment Protection	R	R	7	R	R	R
Square D GC-200 Ground-Fault Relay for Equipment Protection	15	R	R	15	15	R
Merlin Gerin STR58 Trip Units	15	R	R	15	15	R
Merlin Gerin STR53 Trip Units	15	R	R	15	15	R
Federal Pioneer USRC and USRCM Trip Units	R	15	R	R	R	15
Square D Add-on Ground-Fault Module for Equipment Protection	R	5	R	R	R	R

R=RIM module is required to restrain any devices.
Numerical References=Maximum number of upstream circuit breakers which can be restrained without requiring a RIM module.

© 2017 Schneider Electric
All Rights Reserved
2/15/2017

Figure 21

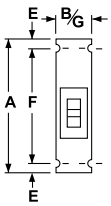

Figure 22

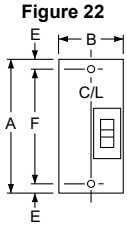

Figure 23

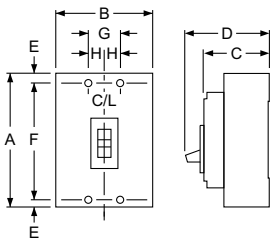

Figure 28

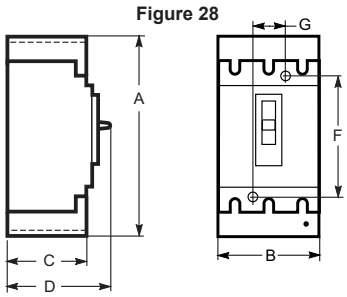

Figure 32

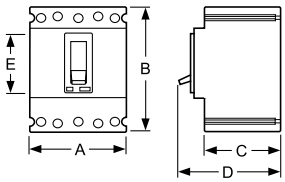

Dimensions and Weights

Table 3.75: Circuit Breakers Dimensions

Circuit Breaker Catalog No. Prefix	No. Poles	Fig. No.	Dimensions—Inches							
			A	B	C	D	E	F	G	H
FAL, FHL	1	21	6.00	1.50	3.16	4.13	0.44	5.13	1.50	—
	2	22	6.00	3.00	3.16	4.13	0.44	5.13	—	—
	3	23	6.00	4.50	3.16	4.13	0.44	5.13	1.50	0.75
GJ	3	32	3.54	4.72	2.76	3.94	2.20	—	—	—
Q4L, LAL, LHL	2, 3	23	11.00	6.00	4.06	5.84	0.88	9.25	2.00	1.00
MAL, MHL	2, 3	23	14.00	9.00	4.53	6.50	1.66	10.69	3.00	1.50

Table 3.76: Shipping Weights

Frame Size	Approx. Shipping Weight (Lbs.)
FAL FHL 2-pole FCL	3
FAL FHL 3-pole	5
Q4L	15
GJ	3
LAL LHL	15
MAL, MHL	34

© 2017 Schneider Electric
All Rights Reserved

Enclosed Motor-Operated FAL/FHL Molded Case Circuit Breakers

Motor-operated enclosed circuit breakers are utilized whenever it is desired to control the operation of an individually-mounted circuit breaker from a remote location. Enclosed motor-operated FAL or FHL circuit breakers are available in either NEMA 1 or 3R construction. 120 Vac control circuit is required for operation of the motor operator. Sufficient space is included for field-installation of a terminal block for convenient end-user control circuit wiring. Not UL Listed.

NOTE: Contact local Field Office for catalog number prior to quoting or placing an order.

Have the following information ready to aid in quoting or ordering an enclosed motor-operated circuit breaker:

- Specify circuit breaker catalog number (ex: FAL36060)
- Specify side mounted operator only
- Specify enclosure type (ex: NEMA 1, 3R)
- Specify if neutrals are required

© 2017 Schneider Electric
All Rights Reserved
2/15/2017

Enclosed Molded Case Switches

Enclosed molded case switches are UL Listed devices supplied with factory-installed automatic molded case switch. Use the Cat. No. listed below and add the enclosure NEMA type suffix as noted in footnote in Table 3.77. An insulated groundable neutral, if required, must be ordered separately from Digest Section 7. Enclosed molded case switches are manufactured on order only.

Table 3.77: Enclosed Molded Case Switches

System	Ampere Rating	Cat. No. Add Suffix *[1]*	600 Vac Short Circuit Withstand Ratings
FH—100 A Frame, 3P, 600 Vac Max.			
2P	100	FHE26000( )	18 kA
3P	100	FHE36000( )	18 kA
LH—400 A Frame, 3P, 600 Vac Max.			
2P	400	LHE26000( )	25 kA
3P	400	LHE36000( )	25 kA

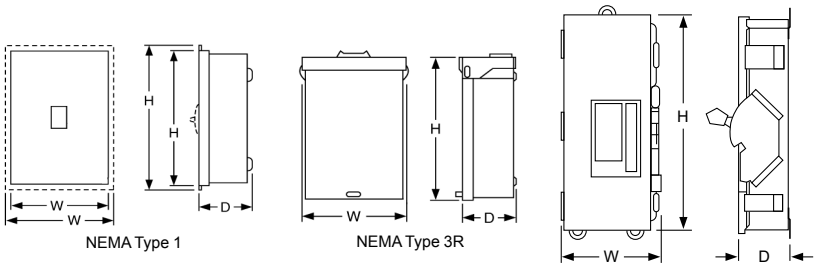

Table 3.78: Enclosed Molded Case Switch Dimensions

Cat. No. Prefix—Suffix	Approximate Dimension						
	Series	H		W		D	
		in.	mm	in.	mm	in.	mm
FHE—AWK	E05	19.50	495	9.13	232	4.88	124
FHE—DS	E05	19.50	495	9.13	232	4.88	124
FHE—F	E02	19.50	495	9.88	251	4.13	105
FHE—RB	E03	18.00	457	8.88	226	4.88	124
FHE—S	E02	18.13	460	8.63	219	4.13	105
LHE—AWK	E05	42.25	1073	13.75	349	7.25	184
LHE—DS	E05	42.25	1073	13.75	349	7.25	184
LHE—F	A03	45.63	1159	16.50	419	6.50	165
LHE—R	A03	44.00	1118	15.38	391	7.88	200
LHE—S	E03	44.50	1130	15.38	391	6.50	165

[1] Add suffix S or F for NEMA 1 surface mounted or NEMA 1 flush mounted, respectively. Add suffix RB for NEMA 3R with bolt-on hub provision (FHE prefix only) or suffix R for NEMA 3R with a blank top endwall (LHE prefix only), respectively. Add suffix AWK for NEMA 12. Add suffix DS for NEMA 4/4X/5 stainless steel.

© 2017 Schneider Electric
All Rights Reserved

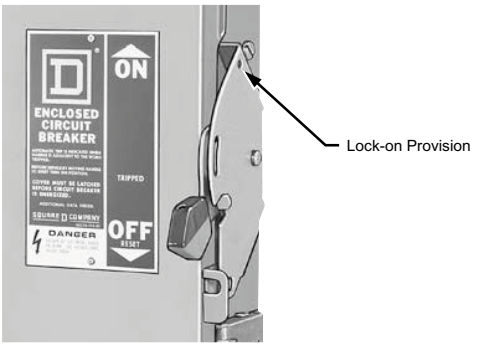

Lock-On Provision

Lock-On Provisions

Lock-off provisions are standard on all NEMA Type 4, 4X, 5 stainless steel and NEMA Type 12, 12K circuit breaker enclosures. Provision for one inch hasp padlock is available factory installed. This modification will allow the circuit breaker to be locked in the ON position. When locked in the ON position, the external operator will not indicate if circuit breaker is tripped. UL Listed.

Table 3.79: Enclosure

Enclosure Prefix	Suffix for Lock-On Provision
FA, J, LA, L, M, P	SPLO

Pilot Light—Selector Switch—Push Button

Pilot lights, push buttons or selector switches are available factory installed in the cover of NEMA Type 4, 4X, 5 stainless steel or NEMA Type 12, 12K circuit breaker enclosures. Wiring to contact blocks is not available. Customer must furnish catalog number of device desired. Price = circuit breaker + enclosure + neutral + ground + pilot light, push button and/or selector switch + factory-installed adder. Order by description. L600 enclosures are UL Listed, other enclosures are not UL Listed.

Phenolic Legend Plate

Available engraved and mounted on most circuit breaker enclosures. Legend engraved in 1/4-inch high white letters on black background. Customer must provide legend. UL Listed. Not available on NEMA Type 7 or 9 enclosures.

To order, add suffix NP to standard catalog number (i.e. LA400SNP).

Stainless Steel Front

The FA100F NEMA Type 1, flush-mount circuit breaker enclosure is available with a stainless steel front. This modification is desirable in food handling areas such as cafeterias and restaurants. Not UL Listed.

Table 3.80: Stainless Steel Front Enclosure

Cat. No.
FA100FSS

© 2017 Schneider Electric
All Rights Reserved
2/15/2017

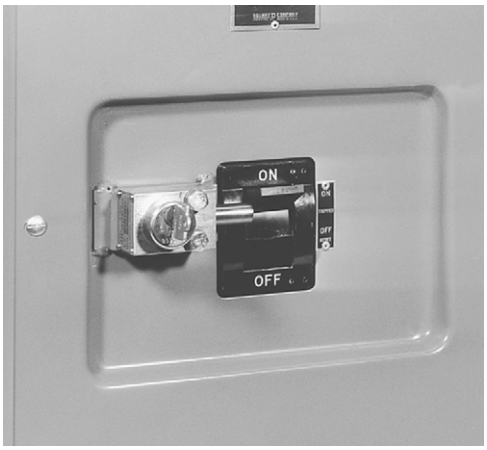

Key Interlock Systems

(Factory installed only.)

Interlocks are used to prevent the authorized operator from making an unauthorized operation. Not available on hazardous location devices (NEMA 7/9).

The key interlock system is a simple and easy method of applying individual key interlock units and assemblies to the above equipment so as to require operation in a predetermined sequence. UL Listed.

Quoting

Contact local Field Sales office for catalog number, availability and pricing prior to quoting a job.

Ordering

Order cannot be released for production until the following information has been provided:

- End User—Company name, address
- Function of each lock (e.g., circuit breaker to be locked open with key removed, key held when circuit breaker is closed)
- Existing Equipment—if circuit breaker is to be interlocked with equipment already on site, provide brand of existing lock and key number
- Other New Equipment—if circuit breaker is to be interlocked with new equipment not yet installed at the site, then provide contact person and phone number so that locks may be coordinated
- Additional information may be required upon order entry

Diagram Symbols

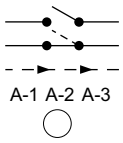

. . . . . Device normally open
. . . . . Device normally closed
. . . . . Direction of key transfer
. . . . . Key interchange number
. . . . . Key

Sample Application—1 (See Figure 1)

To prevent two devices from being closed simultaneously.

Two devices are shown in Figure 1. In operation they are not closed at the same time. With the interlocks arranged as shown only one key is required in the interlocking system. Both devices are shown open, therefore, the key is free. To close any one device the key is inserted and turned in that particular lock, the key is held in this lock until the device is again locked open. This simple interlocking sequence lends itself to a multitude of applications. The procedure is the same for two devices, neither of which is to be opened at the same time.

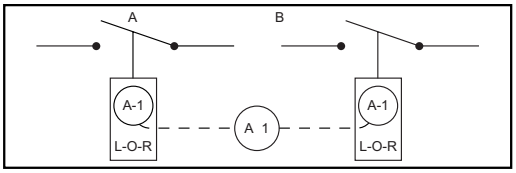

Figure 1

Sample Application—2 (See Figure 2)

To prevent opening of switch A when circuit breaker B is closed.

Switch A and circuit breaker B are in closed position. Key A-1 is held in circuit breaker B interlock.

- Open circuit breaker.
- Turn key A-1 in L-O-R interlock on circuit breaker B to lock open. Key A-1 is now free.
- Insert key A-1 in L-C-R interlock on switch A and turn to unlock.
- Open switch A. Key A-1 is now held. Reverse sequence to restore service.

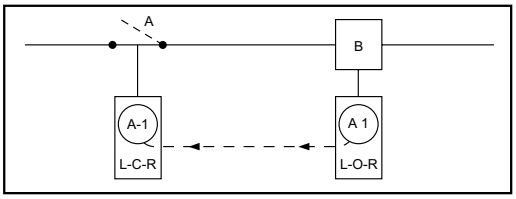

Figure 2

Sample Application—3 (See Figure 3)

To prevent operation of switch A when circuit breaker B is closed. Permits reclosing of circuit breaker for servicing when switch is locked open.

Switch A and circuit breaker B are in closed position. Key A-1 is held in circuit breaker interlock.

- Open circuit breaker.
- Turn key A-1 in L-O-R interlock on circuit breaker B to lock open. Key A-1 is now free.
- Insert key A-1 in L-O-C-R interlock on switch A and turn to unlock.
- Open switch A.
- Turn key A-1 in L-O-C-R interlock on switch A to lock open. Key A-1 is now free.
- Return key A-1 to circuit breaker interlock and unlock for operation during servicing period.

Reverse sequence to restore service.

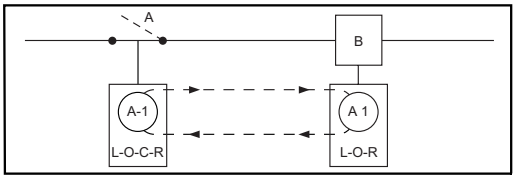

Figure 3

© 2017 Schneider Electric
All Rights Reserved

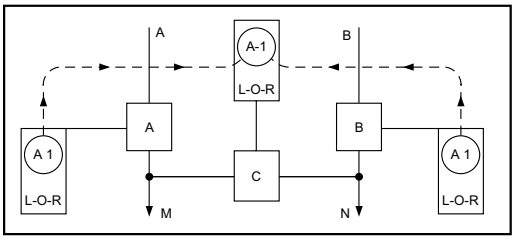

Figure 4

Sample Application—4 (Main-Tie-Main) (See Figure 4)

To prevent paralleling of lines A and B.—Two loads, fed from either source.

Circuit breaker A is closed to supply load M. Circuit breaker B is closed to supply load N. Tie-circuit breaker C is open. Keys A-1 are held in interlocks on both circuit breakers A and B. Tie-circuit breaker C cannot be closed unless either A or B is locked open.

To transfer load N to circuit breaker A, proceed as follows:

- Open circuit breaker B.
- Turn key A-1 in L-O-R interlock on circuit breaker B to lock open. Key A-1 is now free.
- Insert Key A-1 in L-O-R interlock on tie-circuit breaker C and turn to unlock. Key A-1 is now held.
- Close tie-circuit breaker C.

Reverse sequence to restore service.

Load M can be supplied through circuit breaker B in a similar manner.

© 2017 Schneider Electric
All Rights Reserved
2/15/2017

Section 4

Panelboards

NQ Panelboard with
Door-in-Door (Hinged) Trim

MH38 Enclosure with 12-inch Wireway and
Mono-Flat™ Trim with 12-inch Wireway Cover

Panelboards 4-2

General Information 4-2
General Instructions 4-2

Special Features 4-3

Mains and Branches 4-3
Mains 4-3
Branches 4-3
Cabinets 4-4
Special Features 4-4

NQ Merchandised Panelboards 4-7

NQ Main Lug and Main Circuit Breaker Panelboard with SPD 4-7
NQ Main Lug and Main Circuit Breaker Interiors with SPD—240 Vac, 48 Vdc 4-7

Ready-to-Install (RTI) Merchandise 4-8

Miscellaneous Panelboard Accessories 4-8
Copper Equipment Ground Bars 4-8
Field Installable I-Line™ Door Kits 4-8
Type 1 Door-in-Door (Hinged) Trim Fronts 4-9

Replacement Parts for Standard Panelboards 4-9

Trim Clamps and Screws 4-9
Trim Clamps and Screws 4-9
Locks and Keys 4-10
Locks *[2]*Panelboards that meet 1984 NEC® Wire Bending Space are Series E1. 4-10
Keys 4-10

CTC Cabinets 4-11

Wall Mounted Metering Equipment 4-11
Main Circuit Breaker and Current Transformer Compartment 4-11

Retrofit Information 4-12

Retrofit Existing Enclosure Data Sheet 4-12
Data Sheet for Panelboards to Retrofit Existing Enclosures 4-12

© 2017 Schneider Electric
All Rights Reserved

General Instructions

The special feature options covered in this Panelboard estimating procedure are applicable to factory-assembled panelboards only. Do not apply this pricing to ready-to-assemble panelboards.

Special features are listed in three major categories:

- Mains
- Branches
- Cabinets

Metric Conversion

Inches (in.) x 25.4 = millimeters (mm).

I-Line™ Panelboards Factory Assembled

Panel Type	No. Poles	Main Circuit Breaker					
		400 A			600 A		
		LX[1]	LE[1]	LXI [1]	LX[1]	LE[1]	LXI[1]
HCP, HCP-SU	2						
	3						

Table 4.1: Micrologic LE, LX and LXI Branch Circuit Breakers (See Digest pages 7-7 for interrupting rating, voltage rating, Fed. Specs. etc.)

Circuit Breaker Ampere	Circuit Breaker	3 pole			2 pole			1 pole				
		240 V	480 Vac 250 Vdc	H	240 V	480 Vac 250 Vdc	H	120 V	277 V	277 Vac 125 Vdc	Space only	H
Micrologic™ Circuit Breakers (% Rated)												
100–250 A	LX (80%)	—	—	7.5	—	—	7.5	—	—	—	—	—
300–400 A		—	—		—	—		—	—	—	—	—
450–600 A		—	—		—	—		—	—	—	—	—
100–250 A	LXI (80%)	—	—	7.5	—	—	7.5	—	—	—	—	—
300–400 A		—	—		—	—		—	—	—	—	—
450–600 A		—	—		—	—		—	—	—	—	—
100–250 A	LE (100%)	—	—	7.5	—	—	7.5	—	—	—	—	—
300–400 A		—	—		—	—		—	—	—	—	—
450–600 A	LE (80%)	—	—	7.5	—	—	7.5	—	—	—	—	—

Table 4.2: LE, LX & LXI Micrologic Trip Units

LE	LX and LXI
LI - Std	—
	Standard
	—

Table 4.3: D-Frame (600 A 480 Vac) 3P 50/60 Hz circuit Breaker with Electronic Trip Units

Electronic Trip Unit Type	Trip Function	Trip Unit	Continuous Current[2]	G Interrupting Catalog No.	J Interrupting Catalog No.	L Interrupting Catalog No.	Terminal Wire Ratings
Standard	LS	STR23SP	150 A	DGA34150E20	DJA34150E20	DLA34150E20	(1) 2–600 Cu or (1) 2– 500 Al
			250 A	DGA34250E20	DJA34250E20	DLA34250E20	
			400 A	DGA34400E20	DJA34400E20	DLA34400E20	
			600 A	DGA34600E20	DJA34600E20	DLA34600E20	(2) 2/0–350 Cu or (2) 2/0–500 Al
	LSI	STR53UP-[3]	150 A	DGA34150E53	DJA34150E53	DLA34150E53	(1) 2–600 Cu or (1) 2– 500 Al
			250 A	DGA34250E53	DJA34250E53	DLA34250E53	
			400 A	DGA34400E53	DJA34400E53	DLA34400E53	
			600 A	DGA34600E53	DJA34600E53	DLA34600E53	(2) 2/0–350 Cu or (2) 2/0–500 Al
Ammeter	LSI	STR53-UPFI[4]	150 A	DGA34150E58	DJA34150E58	DLA34150E58	(1) 2–600 Cu or (1) 2– 500 Al
			250 A	DGA34250E58	DJA34250E58	DLA34250E58	
			400 A	DGA34400E58	DJA34400E58	DLA34400E58	
			600 A	DGA34600E58	DJA34600E58	DLA34600E58	(2) 2/0–350 Cu or (2) 2/0–500 Al

Table 4.4: DG, DJ, DL Electronic Trip Units

	Standard	Ammeter
LS	Standard	—
LSI		
LSIG	—	—

[1] Std. construction back-fed main.
[2] D-frame circuit breakers 400 A and below are 100% rated, 600 A is standard (80%) rated only
[3] F = Fault Indicator, I = Ammeter
[4] F = Fault Indicator, I = Ammeter

© 2017 Schneider Electric
All Rights Reserved

Mains

Metering—Type 1 Enclosures Only (1200 A Maximum)

Enclosures and Interiors are shipped fully assembled.

NQ, NF and Powerlink™ require a 7-inch left side gutter extension and a 6-inch main end extension for PowerLogic Power Meter applications.

I-Line™ and QMB require a 14-inch side gutter extension for PowerLogic Circuit Monitor and Power Meter applications.

Current Transformers In Mains (ac only and line side only)*[1]*

Prices listed are based on transformers having a 5 A secondary and mounted under a separate cover. Apply appropriate charge from the table below

Table 4.5: Current Transformers

Primary Amperes (5 A—Secondary)	Additional Enclosure Height Required *[2]*
100–1200	6 inches

Customer Equipment Space*[3]*

NOTE: End user must specify end use equipment to be installed.

Available with NQ, and NF lighting panelboards only. Must be opposite the mains end, both main breaker and main lug, to prevent interference with incoming cables. Customer equipment space is not available with thru-feed lugs or sub-feed breakers.

A barrier exists between the equipment space and the panelboard compartment; a separate door is provided as standard (requires 18-inch additional enclosure height).

NOTE: A separate door is not supplied in NEMA 3R/12 construction.

Branches

Keyed Interlocks

NOTE: Not available for use in NQ, NF or I-Line™ HCN panelboards with door. Not available on I-Line™ with door when key interlocked MG/MJ/P/R frame branch-mounted circuit breakers are installed. Must use 4-piece trim or NEMA 3R/12.

Keyed mechanical interlocking of two or more circuits is available on request. Individual locks are furnished for each circuit. All locks operate by one key, which can be removed only when the circuit is locked in the desired position.

I-Line Circuit Breakers — A 3-inch filler adjacent to the circuit is necessary for mounting the interlock; contact your nearest Schneider Electric sales office for assistance with power distribution panelboards with doors. Feature not available on vertically mounted main circuit breaker.

QMB Fusible Switches — Available on 100 A singles (100 A single QMB requires 9 inches of mounting space) through 800 A switches plus LA circuit breaker adapters. Requires 3 inches of branch mounting space per switch for interlock installation.

Motor Operators—I-Line Circuit Breakers Only

Motor operators provide remote *open, close,* and *reset* control of molded case circuit breakers. Price panelboard from the latest Digest, and, for each motor operator, add per table below. In I-Line panelboards, motor operators require 4.5 inches of circuit breaker mounting space. This can be provided on I-Line main circuit breaker only when the main is branch-mounted and back-fed.

NOTE: Not available in I-Line HCN Panelboards

Table 4.6: Motor Operators

Circuit Breaker Type	Motor Operator Voltage
F–frame	120 Vac
H-frame (3P modules only)	48/60, 110/130, 208/277, 380/480 Vac; 24/30, 48/60, 110/130, 250 Vdc
J-frame	48/60, 110/130, 208/277, 380/480 Vac; 24/30, 48/60, 110/130, 250 Vdc
LA, LH	120 Vac
PG, PJ, PL	48, 110/130, 220/240, 380/480 Vac; 24/30, 48/60, 110/130, 200/250 Vdc

NOTE: If the customer is not supplying the motor operator voltage, a control transformer can be supplied.

[1] Feature supported by product selectors in Q2C and EQM.
[2] For NQ, and NF panelboards.
[3] Feature supported by product selectors in Q2C and EQM.

© 2017 Schneider Electric
All Rights Reserved

MH38 Enclosure with 6-inch Increased Left-side Gutter

MH38 Enclosure with 12-inch Extended Bottom End Gutter and One-Piece Trim

Special Features

Cabinets

Increased Enclosure Depth

Type 1 Enclosure*[4]*

8–inch depth (HC26)
12–inch depth (HC32, 42, 44-12–inch only)

Type 3R, 5, or 12 Enclosure*[4]*

8-inch or 12-inch depth
NOTE: No other depths are available.

Increased Side Gutters (Type 1 Enclosures Only)
NOTE: Available on MH enclosures (right or left) in 3, 6 and 12-inch added widths, 26-inch wide HC enclosures up to a maximum of 14 additional inches and 32-inch wide HC enclosures up to a maximum of 10 additional inches.
Not available on 42-inch wide HC enclosures.
No barrier will be supplied unless specified.
Includes one-piece trim.

Provide extended side gutters.

Steel Barrier in Enclosure

NOTE: The enclosure will be extended on one side only. If extension is required on both sides, contact your nearest Schneider Electric sales office for assistance.

Extended Top and Bottom End Gutters

NOTE: Available for Type 1 enclosures only

Type MH Enclosures

6-inch, 12-inch, 18-inch or 24-inch extension. Includes one-piece trim.

Type, HCM Enclosures

9-inch extension. Includes standard panel trim and enclosure extension cover.

Type HCP, HCR-U Enclosures

12-inch extension. Includes standard panel trim and enclosure extension cover.

Type QMB Enclosures

38-inch W x 11.5-inch D may have a 6-inch maximum increased end gutter. This is the only QMB enclosure with an increased end gutter option. Available only with a four-piece trim.

For lengths other than those listed above, refer to the Wireway section on page 4-8.

Drip Hoods*[4]*

Surface-mounted-only panelboard

Special Finishes
NOTE: The standard finish of the enclosure fronts is ANSI 49. The enclosures are galvanized steel.

ANSI 49 Enclosure*[4]*

ANSI 61 Front or Enclosure *[4]*

Front and Enclosure with Polyester Acrylic Powder Paint Finish

Provides increased salt spray performance in coastal areas and increased resistance to UV fading

Special or Custom Paint for Trim and/or Enclosure

Free-standing Enclosures (welded base channels) *[5]*

Supports extending out front and back, welded to bottom of enclosure

[4] Feature supported by Product Selectors in Q2C and EQM.
[5] Not available on NEMA 3R/12 I-Line™ and QMB.

© 2017 Schneider Electric
All Rights Reserved

Hinged Trim

NC38S
Padlock Hasp

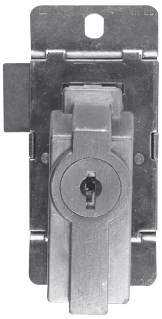
Corbin 15767 Lock

NC38S with
Yale Lock Installed

Common Trim Front for Use with
Multiple-Section Panelboards Mounted Side-By-Side

Special Trims

Hinged Trim *[6]*

Hinged Trim with Outer Door Lock

NOTE: Outer door lock, must be priced with hinged trim.
For door-in-door trim, use hinged trim with outer door lock.

Stainless Steel Trim Fronts *[6]*

NQ 20-inch-wide flush and surface

NF flush and surface

I-Line HCM—Standard trim with door

I-Line HCP—Standard trim with door

Special Locks

Padlock Hasp

For hasp, staple and standard lock (padlock not included)

Special Locks

On trim with a 3-point latch, special locks will be installed as a secondary latch. Special locks include Corbin 60, Corbin 15767, GE 75, Yale® 511S and Best 5L7RL2-626. For all other locks, contact your nearest Schneider Electric sales office for assistance.

Standard key change, Corbin 60, Corbin 15767 or GE 75*[6]*

Standard key change, Yale 511S*[6]*

Standard key change, Best 5L7RL2-626*[6]*

Quarter turn fasteners

NOTE: Special locks for all HC trims and NF panelboards with three-point latches, will be installed as secondary locks. Special locks are not available on I-Line™ 42-inch and 44-inch wide panelboards or QMB type panelboards.
Many key configurations can be accommodated with our standard Square D™ brand lock. Contact your nearest Schneider Electric sales office for assistance.

Multi-Section Panels

Equal-Height Enclosures*[6]*

NQ, and NF

I-Line or QMB

Common Trim in Place of Two Individual Fronts*[6]*

Used to cover two equal-height enclosures mounted side-by-side.

Sheared on Inside Edges

Allows enclosures to be butted together.

[6] Feature supported by Product Selectors in Q2C and EQM.

© 2017 Schneider Electric
All Rights Reserved

Panel skirt framework to be bolted to the wall.

Panel skirt bolted in place below an MH26 enclosure.

Panel skirt completely installed.

MH38 enclosure with 12–inch wireway and Mono-Flat™ trim with 12–inch wireway cover.

Panel Skirt for Standard Width Panelboards [7]

Panel skirts are intended for cosmetic purposes only; they are meant to hide cables which are enclosed in conduit**.**
Do not use a panel skirt as a wireway; see the Wireway section below.

NOTE: Panel skirts are for Type 1 surface-mounted applications with standard depth and width,
Square D™ brand enclosures only.

Table 4.7: Panel Skirts

Skirt Length		
	NQ, NF	I-Line™, QMB
4–60 inches		
61–92 inches		

Wireway

Allows for terminating conduit in the wireway endwall. Only the cable passes through the wireway into the panelboard enclosure. Includes trim and wireway cover.

NOTE: Wireway is for Type 1, surface-mounted applications with standard depth and width, Square D™ brand enclosures only.

Table 4.8: Wireway

Wireway Length		
	NQ, NF	I-Line™, QMB
4–60 inches		
61–92 inches		

Panels to Fit Existing Enclosures

Panelboard interiors and special fronts can be furnished to fit existing enclosures. First, price the complete panel along with the appropriate price adder from below. Next, photocopy the Retrofit Existing Enclosure data sheet found on page 4-12, record the required dimensions on the photocopy and forward it with your order to the nearest Schneider Electric sales office. For interiors requiring vented enclosures, contact your nearest Schneider Electric sales office for assistance.

NOTE: Existing enclosure depth on flush installations must be measured from inside surface of enclosure to outer wall or plaster surface.

Special Fronts

Existing enclosure the same depth as or deeper than our standard.

NOTE: Elevating brackets to be supplied by customer for existing enclosures deeper than our standard.

Existing enclosure shallower than our standard. Requires an enclosure extension (surface applications) or
a formed front (flush applications). A hinged trim front option is not available for these applications.

NOTE: A formed front is available on NQ (225 A max.) and, NF (250 A max.). When a flush front is required for an existing enclosure that is shallower than our standard, be sure to indicate the position of the enclosure with respect to the wall in which it is mounted. This is required in order to determine whether an enclosure extension with a flat front should be supplied, or whether a flush formed front is more applicable. The interior must be centered in the enclosure and, if the enclosure is deeper than our standard, the interior must be leveled within the enclosure. The existing enclosure for NQ and, NF panels cannot be more than 3.0 inches shorter than the standard enclosure. Minimum width is 17 inches. Special trims that are manufactured to fit an existing enclosure will be within ± 0.25 inches of the specification. Refer to the table below for standard enclosure depths and for the maximum depth for which no special mounting brackets are required.

Table 4.9: Panelboard Enclosure Depths

Panelboard Type	Standard Enclosure Depth	Maximum Enclosure Depth for which No Special Mounting Brackets Required
NQ standard width—main lugs only	5.75 inches	5.75 inches
NQ standard width—main circuit breaker	5.75 inches	5.75 inches
NF	5.75 inches	5.75 inches
I-Line™—Maximum F, H or Q-frame branch circuit breaker	6.5 inches	7.25 inches
I-Line—Maximum J-frame branch circuit breaker	8.25 inches	9.0 inches
I-Line—Maximum P or R-frame branch circuit breaker	9.25 inches	10.25 inches

Space Heater

NOTE: Enclosure, interior and trim ship fully assembled. 120 V is standard. Top feed applications only.
NQ and NF require 18 inches equipment space in NEMA 3R/12 constructions.
NQ and NF require 6 inch bottom end gutter in NEMA 1 construction.
Unwired (provisions for wiring to external source)

Wired (with overcurrent device, thermostat)

[7] Feature supported by Product Selectors in Q2C and EQM.

© 2017 Schneider Electric
All Rights Reserved

I-Line Door-in-Door Enclosure

Access to Circuit Breaker Handles

Access to Wiring Gutters

Special Enclosures

Type 1 Gasketed Enclosure (gasketing between front and enclosure)

20-inch maximum panel width

Over 20-inch panel width

NOTE: For 250 A and below enclosures only.

Stainless Steel Enclosure (Type 3R, 4, 4X, 5 and 12; UL Listed)

NOTE: For #316 stainless steel, add 15% to the prices shown below.

NQ, and NF

For panelboard heights up to 41inches

For panelboard heights of 44–56 inches

For panelboard heights of 59–80 inches

I-Line™

HCM

HCP

NOTE: 304 stainless, standard

QMB *[8]*

Fiberglass Enclosures (Type 4X, Non-Vented; UL Listed)

NQ, and NF

28-inch height

33-inch, 40-inch and 50-inch height

I-Line and QMB

Type 12 Door-In-Door Enclosures

Table 4.10: Available Enclosures

Interior Type	Enclosure Size		
	Height	Width	Depth
NQ *[9]*	56 inches	20 inches	6.5 inches
NF *[10]*	56 inches	20 inches	6.5 inches
I-Line (HCM)	91 inches	32 inches	11.5 inches
I-Line (HCP)	68 inches	42 inches	12.7 inches
I-Line (HCP)	86 inches	42 inches	12.7 inches

NQ Main Lug and Main Circuit Breaker Interiors with SPD—240 Vac, 48 Vdc

NOTE: For selecting SurgeLoc SPD for RTI NQ Panelboard application, please refer to Table 7.197 of Digest 177.

Table 4.11: NF Merchandised Interiors with SPD—Use I-Line Panelboards on 480 V 3Ø3W Delta Applications

Mains Rating	Max. Breaker Spaces	SPD Ratings		Interior	Components for adding Vertical Main Circuit Breaker	
					MCB Kit	Main Circuit Breaker Frame
		Voltage	Surge Rating	Catalog No.	Catalog No.	Select the appropriate MCB and price from the tables starting on Digest page 7-22
250 A	42	480Y/277 3P4-W	120	NF442L2TV-S412	N250MJ or N250MK-C	JD/G/J/L or KI
				NF442L2TV-S412C		
250 A	42		160	NF442L2TV-S416		JD/G/J/L or KI
				NF442L2TV-S416C		
400 A	42	480Y/277 3P4-W	120	NF442L4TV-S412	N400M	LAL/LHL (LC and LI F/A only)
				NF442L4TV-S412C		
400 A	42		160	NF442L4TV-S416	N400M	
				NF442L4TV-S416C		

NOTE: Dry contacts standard.

[8] Not available for QMB interiors over 800 A.
[9] Not available for NQ interiors over 225 A.
[10] Not available for NF interiors over 250 A.

© 2017 Schneider Electric
All Rights Reserved

Catalog No.
NC44SHR

Copper Equipment Ground Bars

Copper equivalents of our aluminum PK–GTA equipment ground bars are available. These copper ground bars accept #14–4 Cu only.

Table 4.12: Copper Ground Bars for NQOD and NF Panelboards (see the Digest, Section 9 for NQ copper ground bar kits)

Maximum Number of Circuits	Maximum Ampere Rating	Catalog No.
12	225	8010302651
18	225	8010302652
23	225	8010302653
27	400/600	PK27GTACU

Field Installable I-Line™ Door Kits

Table 4.13: I-Line Door Kits

Panel Type	Catalog No. *[1]*
HCN	HCN52D( )
	HCN65D ( )
	HCN74D ( )
	HCN83D ( )
	HCN92D ( )
HCM	HCM48D ( )
	HCM64D ( )
	HCM73D ( )
	HCM91D ( )
HCP	HCW50D
	HCW59D
	HCW68D
	HCW86D
HCRU	HCW86D
HCN/HCM Latch Bracket	80104-908-50

- NOTE: HCRU door covers circuit breakers only, not entire box

[1] Add “S” for surface or “F” for flush in place of the parentheses.

© 2017 Schneider Electric
All Rights Reserved
2/15/2017

Type 1 Door-in-Door (Hinged) Trim Fronts

Features

- Meets door-in-door specifications
- Provides continuous piano hinge
- Permits one-person maintenance

Table 4.14: Hinged Trim

I-Line Fronts	NQ and NF Fronts
Catalog No. *[2]*	Catalog No. *[2][3]*
HC2652T( )HR	NC26( )HR
HC2665T( )HR	NC32( )HR
HC2674T( )HR	NC38( )HR
HC2683T( )HR	NC44( )HR
HC2692T( )HR	NC50( )HR
HC3248T( )HR	NC56( )HR
HC3264T( )HR	NC62( )HR
HC3273T( )HR	NC68( )HR
HC3291T( )HR	NC74( )HR
HC4250T( )HR	NC80( )HR
HC4259T( )HR	NC86( )HR
HC4268T( )HR	NC50V( )HR
HC4286T( )HR	NC56V( )HR
HC4486T( )HR	NC62V( )HR
—	NC68V( )HR
—	NC74V( )HR
—	NC80V( )HR
—	NC86V( )HR

Trim Clamps and Screws

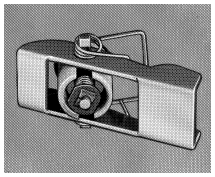

Catalog No
LP9501

Table 4.15: Trim Clamps and Screws

Application	Catalog No.
NQOD Panelboards: Series E1 *[1]* 400 A and 600 A fronts NEHB Panelboards: Series E1 *[1]* 600 A fronts I-Line Panelboards: All Series E1 *[1]* fronts	LP9501
NQOD Panelboards: All Series E1 *[1]* vented fronts and hinged fronts manufactured after July 1994. NF Panelboards: All vented fronts and hinged fronts. NEHB Panelboards: All Series E1 *[1]* hinged fronts manufactured after July 1994. I-Line and QMB Panelboards: I-Line front with door manufactured after July 1994 but before August 1997; and I-Line hinged fronts and QMB front with door manufactured after July 1994.	LP9502 (includes 8 trim screws and captive hardware)
NQ and NQOD Panelboards: Screws for all fronts through 225 A. NF Panelboards: Screws for all fronts through 250 A. I-Line Panelboards: 4-piece trim and trim with door manufactured after July 1997. QMB Panelboards: Screws for 4-piece covers.	4020513001K (package of 10)
I-Line Panelboards: Panelboard deadfront screws for 4-piece trim manufactured after July 1994 but before August 1997.	8002506701

[2] Add “S” for surface or “F” for flush in place of the parentheses.
[3] For welded metal directory, add “WMD” suffix to the end of the catalog number.
[1] Panelboards that meet 1984 NEC® Wire Bending Space are Series E1.

© 2017 Schneider Electric
All Rights Reserved

Catalog No. PK4FL and PD22FL

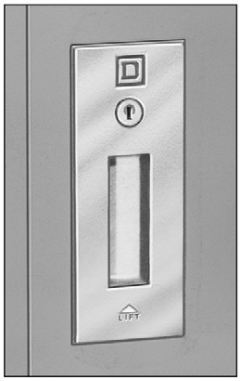

Catalog No. PK5FL

Catalog No. PK4NVL

Catalog No. 30007 11851

Locks *[2]*

Table 4.16: Locks—Type 1 Enclosures

Application	Catalog No.
NQOD, NQO, and NQOB Panelboards	
All fronts on enclosures up to and including 50-inch high and 53-inch through 68-inch high vented trims	PK4FL (Before 01/06/97)
	PK22FL (After 01/06/97 NQ or NQOD only)
All fronts on enclosures 56 inches high or higher, excluding 53-inch through 68-inch high vented fronts	PK5FL (Before 11/01/99)
	PK22FL (After 11/01/99 NQOD only)
NQ and NF Panelboards	
All fronts*[3][4]*with the exception of those for use on panels using LC or LI main circuit breakers	PK22FL
Fronts on enclosures 68 inches high or higher for panels using LC or LI main circuit breakers	PK5FL
I-Line Panelboards	
HCN: Series 1 and 2 fronts on enclosures up to 54 inches high	PK4FL
HCN: Series 1 and 2 fronts on enclosures 63 inches high or higher	PK5FL
HCM: Series 1 and 2 fronts on 38-inch high enclosures	PK4FL
HCM: Series 1 and 2 fronts on enclosures 47 inches high or higher	PK5FL
I-Line Panelboards	
HCW, HCWM: Series 1 and 2 fronts	PK5FL
HCN: Series E1*[2]*fronts on enclosures up to and including 74-inches high	PK4FL (Before 11/14/97)
	PK22FL (After 11/14/97)
HCN: Series E1*[2]*fronts on enclosures 83 inches high or higher	PK5FL (Before 04/05/02)
	PK22FL (After 04/05/02) *[5]*
HCM: Series E1*[2]* fronts on enclosures 64 inches high or higher	PK5FL (Before 11/14/97)
	PK22FL (After 11/14/97) *[5]*
HCW, HCWM, HCWM-U, HCR-U: Series E1*[2]*Front	PK5FL
I-Line Panelboards (4-piece trim with door kit)	
HCN: Series E1*[2]* fronts on enclosures up to and including 74 inches high	PK22FL
HCN: Series E1*[2]* fronts on enclosures 83 inches high or higher	PK5FL (Before 02/22/02)
	PK22FL (After 02/22/02) *[5]*
HCM: Series E1*[2]* fronts on enclosures 73 inches high or higher	PK22FL
HCP, HCR-U: Series E1*[2]* Front	PK5FL
HCP-SU: Series E1*[2]* Front and HCP-SU Hinged Front	PK22FL *[5]*

- One NSR-251 key is included with each lock.

Table 4.17: Locks—Type 3R/12 Enclosures

Application	Catalog No.
NQOD, NQO, NQOB, NF all enclosures Series E1	PK4NVL
NQ, NQOD, NF Series E2	8011604350 (one handle)
	8011604351 (two handles)
I-Line and QMB Series E1	PK4NVL
I-Line and QMB Series E2	8012106350
I-Line—Handle for padlocking Series 1 and 2	3000711851
Stainless steel enclosures	HSEM-3PLH

Keys

Table 4.18: Replacement Keys

Application	Catalog No.
For use on all locks except those on stainless steel enclosures	LP9618
Locks on stainless steel enclosures	80106-456-01

Catalog No. LP9618

[2] Panelboards that meet 1984 NEC® Wire Bending Space are Series E1.
[3] Fronts 56 inches or higher on 250 A maximum interior require two locks.
[4] Front 74 inches or higher on 600 A maximum interior require two locks.
[5] Fronts require two locks.

© 2017 Schneider Electric
All Rights Reserved
2/15/2017

Standard Unit Inverted Unit

Cold Sequence Metering

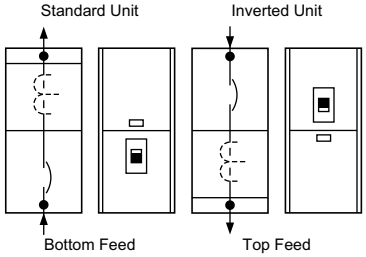

Hot Sequence Metering

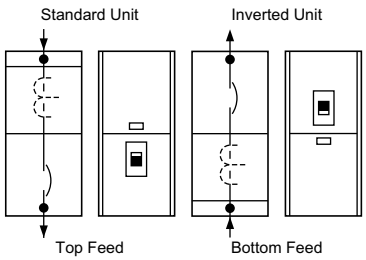

Main Circuit Breaker and Current Transformer Compartment

Service Entrance Equipment Hot or Cold Sequence Metering, Top or Bottom Feed, Indoor Construction at 600 Volts

General: Suitable for use as service entrance equipment on AC systems. Listed by Underwriters' Laboratories.

Service: 1Ø3W, 3Ø3W, 3Ø4W, rated up to 600 Vac maximum.

Metering: *[1]* Current transformer compartment with provisions for installing bar type current transformers. For window type current transformers, order bus link kit from Table 4.19 Product Selection Table, page 4-11.

Standard unit is factory assembled for bottom feed cold sequence or top feed hot sequence metering applications. The unit is field convertible for bottom feed hot sequence or top feed cold sequence metering. Refer to instruction bulletin 80105-113-0x, *CTC Wall-Mounted Metering Equipment*, for field conversion details.

Mains: Main disconnects provided. 400-800 A: MJP. 1000-1200 A: PJP. Handle lock-off attachment provided for main circuit breaker as standard.

Refer to Digest pages 7-36—7-42 for field installable accessories.

Enclosure: Front accessible, totally enclosed, gray baked enamel finish. Available as indoor construction only. **Dimensions—78 in. H x 26 in. W x 14.3 in. D.**

- NOTE: Not EUSERC approved. For EUSERC approved Speed-D switchboards, see Digest pages 11-4 and 11-5.
  Service Applications

Table 4.19: Product Selection Table*[2]*

System	Service Voltage (AC)	Ampere Rating of Main	Catalog Number
1Ø3W, 3Ø3W, 3Ø4W	600 V Max.	400 A	CTC364CU
		600 A	CTC366CU
		800 A	CTC368CU
		1000 A	CTC3610CU
		1200 A	CTC3612CU
Bus link kit—used when installing window-type current transformers *[3]*			SS4BLC

Table 4.20: Lug Table

Ampere Rating	Main Circuit Breaker Lug Wire Range *[4]*	Ground Lug
400 A	(3) 3/0–500 kcmil Al or Cu	#6 AWG–300 kcmil Al or Cu
600 A	(3) 3/0–500 kcmil Al or Cu	
800 A	(3) 3/0–500 kcmil Al or Cu	
1000 A	(4) 3/0–500 kcmil Al or Cu	
1200 A	(4) 3/0–500 kcmil Al or Cu	

[1] Field conversion is the customer's responsibility, only the standard configuration is built by the factory.
[2] Must specify feed (top or bottom) and sequence (hot or cold) at the time of order.
[3] Kits required per 3Ø application:
400–600 A—Order one kit
800–1200 A—Order two kits
[4] CT bus lugs and neutral lugs are identical to the main circuit breaker lugs.

© 2017 Schneider Electric
All Rights Reserved

Data Sheet for Panelboards to Retrofit Existing Enclosures

Distribu-tor:	
Job Name:	
Contrac-tor:	
Panel Marking:	

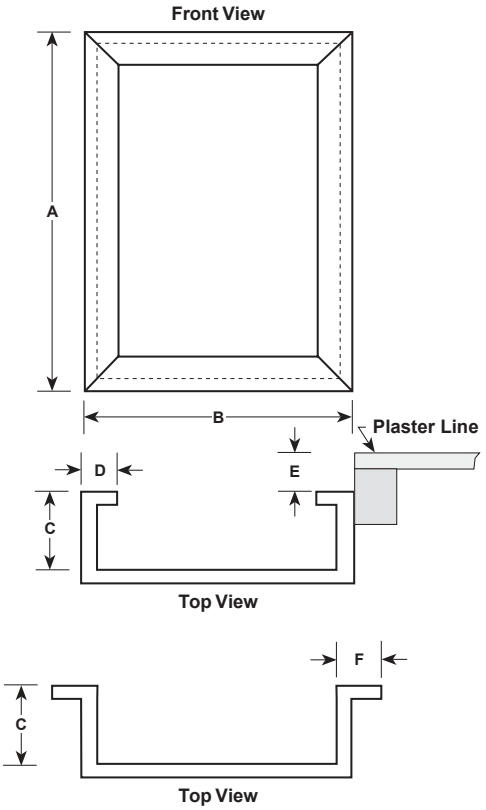

The following dimensions are necessary for quotation and production of a panel to fit an existing enclosure. Provide dimensions in inches only.

Existing Flush-Mounted Enclosures

- Height dimension “A”:
- Width dimension “B”:
- Depth dimension “C”:
- Flange width dimension “D”:
- If enclosure is not flush with Plaster Line, dimension “E”:
  Existing Surface-Mounted Enclosures
- Height dimension “A”:
- Width dimension “B”:
- Depth dimension “C”:
- Flange dimension may be either dimension “D” or “F” (select one)
  - Dimension “D”:
  - Dimension “F”:NOTE: Trims are furnished so that the interior must be centered within the enclosure.

    If the enclosure is deeper than the standard panelboard enclosure for the required type of panelboard, *customer-supplied mounting brackets may be necessary to bring the interior out to the front of the enclosure.*

    If interior requires a vented enclosure, contact your nearest Schneider Electric sales office for assistance.

This data sheet is also available on-line.

- Go to http://intranet.us.schneider-electric.com
- Click on **U.S. Business**, then select **Sales & Marketing Home** from the pulldown menu
- On the Sales & Marketing page, select **Support and Resources**
- On the Support and Resources page, select **Mentor** from the **Tools** options
- On the Mentor page, select **Mentor Order Quality** from the **Mentor Application** options
- When the Mentor order page appears, type in a project name in the **Project Name:** field, an 8-character number in the **Q2C #** field and your name in the **Prepared by:** field. Click on the box next to **Panelboards**, and then click on the **Next—>** button at the top of the page.
- On the Panelboards Mentor page, click on the box next to **Trims to Fit**, and then click on the
  Next—> button at the top of the page.
- When the **File Download** window appears, click on the **Open** option.
- When the Mentor document opens, click on the **Trims to Fit Data Sheet** link at the bottom of the page.
- When the **File Download** window appears, click on the **Open** option to display the data sheet, or click the **Save** option to save the data sheet to your hard drive.

© 2017 Schneider Electric
All Rights Reserved
2/15/2017

Section 5

Switchboards

Power-Style™ Commercial Multi-Metering (CMM) Switchboards 5-2

Replacement Parts 5-2
Meter Sockets, Covers, Hardware Kits 5-2
Tenant Main Disconnects 5-3
Class T Fusible Pullouts, CMM Pullout Heads 5-3

Speed-D™ Switchboards 5-4

Service Selection 5-4
Merchandised Speed-D Switchboards 5-4

Power-Style™ Commercial Multi-Metering Switchboard Lineup

EUSERC UCT, Single Main Circuit Breaker with I-Line Distribution Panel

EUSERC UCT, Fusible Multiple Mains

Speed-D™ Switchboards

© 2017 Schneider Electric
All Rights Reserved

Meter Sockets, Covers, Hardware Kits

Meter socket kits include meter socket (ringless type or ring type—see tables below) and instruction bulletin. The connection cables from the line bus to the meter socket and from the meter socket to the tenant main disconnect are not included. These should be provided by the contractor.

Table 5.1: EUSERC Meter Socket with Test Block Kit (Ring Type; Class 2756)

Voltage System	Poles	Description	Catalog No.	
			Single-Phase	3-Phase
120/240 V, 208Y/120 V, or 240/120 V Delta	AB	Old design: plug on to line side bus	CM522ABE	—
	AC		CM522ACE	—
	BC		CM522BCE	—
	AC	New design: lugs on line side	CMLL522E	—
208Y/120 V, 240/120 V Delta, or 480Y/277 V	ABC	Old design: plug on to line side bus	—	CM732E
		New design: lugs on line side	—	CMLL732E

Table 5.2: Lever Bypass Meter Socket (Ringless Type; Class 2755)

Voltage System	Poles	Description	Catalog No.	
			Single-Phase	3-Phase
480Y/277 V	ABC	Old design: plug on to line side bus	—	8024878850
		New design: lugs on line side	—	CMLL732

Table 5.3: Cover and Hardware Kits

Description	Tenant Main Structure	Catalog No.
CMM Circuit Breaker Cover Kit *[1]*		
Allows PowerPact™ H, J, and Q circuit breakers to be installed in legacy design CMM structures.	3-Socket	CM3BKRCVR
	6-Socket	CM6BKRCVR
CMM Meter Cover Kit for EUSERC Applications		
Includes meter cover, test block cover, and hardware.	3-Socket	CM7CR20ER
	6-Socket	CM7CR32ER
CMM Meter Cover Kit for Lever Bypass Applications		
Meter socket cover		CM7CR20R *[2]*
Blank cover		CM20BLK *[2]*
CMM Universal Hardware Kit		
Required to add any tenant main disconnect.		CMUHWKIT

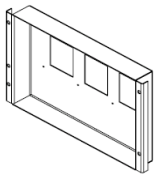

CM3BKRCVR

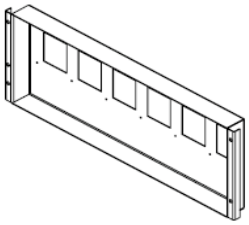

CM6BKRCVR

For additional information or for custom applications, please contact your local Schneider Electric representative. Or, visit us on the web at www.schneider-electric.us.

[1] A new circuit breaker cover is required when adding a PowerPact Q, H, or J circuit breaker to a legacy design tenant metering structure. The new cover has larger openings to accommodate the padlock attachment for these circuit breakers.

[2] Order point: PDS.

© 2017 Schneider Electric
All Rights Reserved
2/15/2017

Tenant Main Disconnects

Table 5.4: Circuit Breakers

Ampacity	Catalog No.	SCCR 240 V	SCCR 480 V	Load Lug Information
100 A F-frame Circuit Breaker				
60 A	FAL34060	25 kA	18 kA	#12 - 1/0 AWG Al or Cu
70–100 A	FAL34xxx *[3]*			
60 A	FHL36060	65 kA	25 kA	
70–100 A	FHL36xxx *[3]*			
Padlock Attachment	HPAFK	—	—	—
PowerPact™ Q-frame 250 A Circuit Breaker (240 Vac) *[4] [5]*				
110–200 A	QDL32xxx *[6]*	25 kA	N/A	#4 - 300 kcmil Al or Cu
110–200 A	QGL32xxx *[6]*	65 kA	N/A	
110–200 A	QJL32xxx *[6]*	100 kA	N/A	
Padlock Attachment	QBPAF	—	—	—
PowerPact H-frame 150 A Circuit Breaker (600 Vac, 250 Vdc)				
60 A	HDL36060	25 kA	18 kA	#4 - 3/0 kcmil Al or Cu
70–100 A	HDL36xxx *[7]*			
110–150 A				
60 A	HGL36060	65 kA	35 kA	
70–100 A	HGL36xxx *[7]*			
110–150 A				
60 A	HJL36060	100 kA	65 kA	
70–100 A	HJL36xxx *[7]*			
110–150 A				
60 A	HLL36060	100 kA	100 kA	
70–100 A	HLL36xxx *[7]*			
110–150 A				
Padlock Attachment	S37422	—	—	—
PowerPact J-frame 250 A Circuit Breaker (600 Vac, 250 Vdc)				
175–200 A	JDL36xxx *[8]*	25 kA	18 kA	#4 - 300 kcmil Al or Cu
175–200 A	JGL36xxx *[8]*	65 kA	35 kA	
175–200 A	JJL36xxx *[8]*	100 kA	65 kA	
175–200 A	JLL36xxx *[8]*	100 kA	100 kA	
Padlock Attachment	S37422	—	—	—

Class T Fusible Pullouts, CMM Pullout Heads

Table 5.5: Class T Fusible Pullouts (Universal Hardware Kit CMUHWKIT Required)

Ampacity	Catalog No. *[9]*	SCCR 240 V *[10]*	SCCR 480 V	Wire Size Al or Cu
100 A	FTL3100	100 kA	N/A	#14 - 1/0 AWG
200 A	FTL3200	100 kA	N/A	#4 - 250 kcmil
60 A	FTL43060	N/A	100 kA	#14 - #2
100 A	FTL43100	N/A	100 kA	#14 - 1/0 AWG
200 A	FTL43200	N/A	100 kA	1/0 AWG - 300 kcmil

Table 5.6: CMM Pullout Heads

Mains: Voltage System	Mains: Rating (A)	Mains: Poles	Pullout Head (No Base) Catalog No. *[11]*
1Ø3W 120/240 V 3Ø4W 240/120 V Delta 3Ø4W 208Y/120 V	100	3	4050707050 *[12]*
	200	3	4050705950 *[12]*
3Ø4W 480Y/277 V	60	3	—
	100	3	—
	200	3	—

[3] To complete the catalog number for these PowerPact F-frame circuit breakers, replace xxx with the required ampacity (070, 080, 090, or 100).
[4] A shunt trip is not available on PowerPact Q–frame circuit breakers.
[5] A new circuit breaker cover is required when adding a PowerPact Q-, H-, or J-frame circuit breaker to an old–design tenant metering structure. This new cover has larger openings to accommodate the padlock attachment for these circuit breakers. See Table 5.3 Cover and Hardware Kits, page 5-2 for ordering information.
[6] To complete the catalog number for PowerPact Q-frame circuit breakers, replace xxx with the required ampacity (110, 125, 150, 175, or 200).
[7] To complete the catalog number for PowerPact H-frame circuit breakers, replace xxx with the required ampacity (070, 080, 090, 100, 110, 125, or 150).
[8] To complete the catalog number for PowerPact J-frame circuit breakers, replace xxx with the required ampacity (175 or 200).
[9] Discount schedules: FTL3100 and FTL3200 = DE5; FTL43060, FTL43100, and FTL43200 = PE1A.
[10] 240 V fusible pullouts cannot be used on a Lever Bypass CMM. Only 480 V pullouts can be used.
[11] Discount schedule: DE5.
[12] Order point: Lexington, KY.

© 2017 Schneider Electric
All Rights Reserved

Merchandised Speed-D Switchboards

Table 5.7: Subfeed Circuit Breakers *[1] [2]*

Description	Rat-ing (A)	2-Pole *[3]* Catalog No.		3-Pole Catalog No.	
		Left	Right	Left	Right
Subfeed Circuit Breaker Kit— Price includes circuit breaker, connectors and mounting hardware. The complete kit, mounting hardware, circuit breaker and connectors will be shipped direct from plant.	100	SASFB100L( )	SASFB100R( )	SASFB100L	SASFB100R
	110	SASFB110L( )	SASFB110R( )	SASFB110L	SASFB110R
	125	SASFB125L( )	SASFB100R( )	SASFB125L	SASFB125R
	150	SASFB150L( )	SASFB150R( )	SASFB150L	SASFB150R
	175	SASFB175L( )	SASFB175R( )	SASFB175L	SASFB175R
	200	SASFB200L( )	SASFB200R( )	SASFB200L	SASFB200R
	225	SASFB225L( )	SASFB225R( )	SASFB225L	SASFB225R

[1] Cannot use subfeed circuit breaker kit with multiple mains service section switchboards.
[2] For use on all Speed-D switchboards except Series E4.
[3] Two pole circuit breaker catalog numbers are completed by adding required phase connection letters as suffix (for example, SASFB100LAC).

© 2017 Schneider Electric
All Rights Reserved
2/15/2017

Section 6

Transformers

General Purpose Dry Type 600 Volts and Below 6-3

K-Rated Transformers 6-3
Drive Isolation Transformers 6-5
Open Core and Coil Transformers 6-6

Industrial Control 6-7

Type EO Transformers 6-7
Type T and MultiTap™ Transformers 6-7

Instrument 600 Volt Class 6-8

Voltage and Current Transformers 6-9
Toroidal Current Transformers 6-10
Toroidal Current Transformers (64R, 74R, 66R, 76R) 6-10
Toroidal Current Transformers (110R, 110R, 120R, 140R) 6-10
Toroidal Current Transformers (152R, 170R, 180R, 210R) 6-11
Toroidal Current Transformers (200R, 201R, 202R, 203R) 6-12
Shorting Terminal Blocks 6-12
Current Transformers: Multi-Ratio, Rectangular, Split-Core 6-12
Multi-Ratio Current Transformers 6-12
Rectangular Window Current Transformers 6-13
Split-Core Current Transformers 6-13
Current Transformers: Bushing, Auxiliary 6-14
Bushing Current Transformers 50–400 Hz 6-14
Auxiliary Current Transformers 6-14
Transformers—Obsolete 6-15
Obsolete—January 1, 2016Energy Efficient Three-Phase 6-15
Obsolete—January 1, 2016EE Watchdog Transformers 6-16
Obsolete—January 1, 2016EE NL and NLP Series Transformers 6-17

© 2017 Schneider Electric
All Rights Reserved

Class 7400

Enclosure Dimensions and Accessories[4]

Enclosure Number/ Style		Height		Width		Depth		Mounting	Weather-shield	Wall Mounting Bracket	Ceiling Mounting Bracket	Insulation Class °C
		In.	mm	In.	mm	In.	mm					
1	A	5.00	127	4.47	114	3.44	87	Wall	[5]	[6]	—	105
2	A	5.50	140	4.47	114	3.44	87	Wall			—	105
3	A	5.00	127	4.85	123	3.75	95	Wall			—	105
4	A	5.50	140	5.23	133	4.06	103	Wall			—	130
5	A	6.19	157	6.19	157	4.69	119	Wall			—	130
6	A	6.69	170	6.19	157	4.69	119	Wall			—	180
7	A	8.13	270	6.94	176	5.31	135	Wall			—	180
8	A	8.25	210	8.68	220	6.56	167	Wall			—	180
9	A	9.56	243	8.68	220	6.56	167	Wall			—	180
10	A	10.50	267	8.62	219	6.50	165	Wall			—	180
11	A	12.56	319	8.62	219	6.50	165	Wall			—	180
12	C	13.50	343	14.75	375	9.00	229	Wall			—	180
13	B	14.75	375	9.75	248	11.75	298	Wall			—	180
14	C	14.75	375	19.10	485	12.25	311	Wall			—	180
15	B	20.00	508	15.00	381	13.50	343	Wall			—	180
16	C	22.00	559	25.00	635	13.50	343	Wall			—	180
17	D	27.00	686	20.00	508	16.00	406	Floor	WS363	WMB361362	CMB363	220
	E	27.00	686	20.00	508	16.00	406	Floor	[7]	WMB361362	CMB363	220
	H	37.00	940	20.00	508	16.00	406	Floor	WS363	WMB361362	CMB363	220
18	D	30.00	762	20.00	508	20.00	508	Floor	WS363	WMB363364	CMB363	220
	E	30.00	762	20.00	508	20.00	508	Floor	[7]	WMB363364	CMB363	220
	H	37.00	940	20.00	508	20.00	508	Floor	WS363	WMB363364	CMB363	220
19	D	30.00	762	30.00	762	20.00	508	Floor	WS364	WMB363364	CMB364	220
	E	30.00	762	30.00	762	20.00	508	Floor	[7]	WMB363364	CMB364	220
20	D	37.00	940	30.00	762	20.00	508	Floor	WS364	WMB363364	CMB364	220
	E	37.00	940	30.00	762	20.00	508	Floor	[7]	WMB363364	CMB364	220
21	D	37.00	940	30.00	762	24.00	610	Floor	WS364	—	CMB364	220
	E	37.00	940	30.00	762	24.00	610	Floor	[7]	—	CMB364	220
22	D	43.75	1111	32.00	813	27.00	686	Floor	WS380	—	CMB380	220
	E	43.75	1111	32.00	813	27.00	686	Floor	[7]	—	CMB380	220
23	E	48	1219	48	1219	29.5	749	Floor	[8]	—	—	220
24	D	49.5	1257	35	889	28.5	724	Floor	WS381	—	CMB381	220
	E	49.5	1257	35	889	28.5	724	Floor	Note 5	—	CMB381	220
25	D	49.5	1257	41	1041	32	813	Floor	WS382	—	—	220
	E	49.5	1257	41	1041	32	813	Floor	[7]	—	—	220
26	D	57.5	1461	41	1041	32	813	Floor	WS382	—	—	220
28	D	60	1524	56	1422	36	914	Floor	WS370A	—	—	220
	E	60	1524	56	1422	36	914	Floor	[7]	—	—	220
29	D	68	1727	56	1422	36	914	Floor	WS370A	—	—	220
30	D	71	1803	48	1219	36	914	Floor	WS383	—	—	220
	E	71	1803	48	1219	36	914	Floor	[7]	—	—	220
31	D	74	1880	56	1422	40.5	1029	Floor	WS384	—	—	220
	E	74	1880	56	1422	40.5	1029	Floor	[7]	—	—	220
32	F	91.5	2388	56	1422	54	1372	Floor	[9]	—	—	220
33	F	94	2388	72	1829	54	1372	Floor		—	—	220
34	F	94	2388	84	2134	54	1372	Floor		—	—	220
35	F	94	2388	96	2438	54	1372	Floor		—	—	220
36	D	40.5	1031	36.5	916	21.75	553	Floor		—	—	220
37	D	51.5	1310	40.5	1031	26.5	674	Floor		—	—	220
38	D	66	1679	50.5	1285	32	814	Floor		—	—	220
39	F	90	2290	80	2036	50	1272	Floor		—	—	220
40	F	90	2290	90	2290	50	1272	Floor		—	—	220
41	F	100	2545	100	2545	60	1527	Floor		—	—	220
42	F	108	2748	108	2748	60	1527	Floor		—	—	220
43	F	90	2290	64	1628	44	1120	Floor		—	—	220
44	F	90	2290	72	1832	50	1272	Floor		—	—	220
45	D	80	2036	64	1628	44	1120	Floor		—	—	220
51	X	9.5	24	10	25	7.75	20	Wall	[10]	[6]	—	180
52	X	12	30	13.75	35	13.75	35	Wall			—	180
53	X	24	61	21.5	55	16.38	42	Wall			—	180
54	X	23	58	25.5	65	13.75	35	Wall			—	180
55	X	31.5	80	31.5	80	16.25	41	Wall			—	180
61	HX	Contact your local Schneider Electric representative for details.										
62	HX											
63	HX											

NOTE: Wall mounting brackets are used with units weighing no more than 700 lbs.
Ceiling mounting brackets are used with units weighing no more than 1200 lbs.
Weathershields are available for units 600 Volts and below. For 2.4, 5, and 15 kV units suitable for outdoor use, contact the factory.

[4] These dimensions are not for construction. Contact your local Schneider Electric representative for certified prints.
[5] Transformer is NEMA Type 3R Standard. Weathershield not required for outdoor use.
[6] Wall mounting brackets are a standard part of transformer enclosure. Accessory not required.
[7] Indoor/outdoor enclosure standard. Weathershield not required.
[8] Indoor/outdoor enclosure standard. Weathershield not required.
[9] Special outdoor construction required for NEMA Type 3R applications. Contact your local Schneider Electric representative for details.
[10] Transformer is NEMA Type 4X Standard. Weathershield not required.

© 2017 Schneider Electric
All Rights Reserved
2/15/2017

Obsolete—October 1, 2015
K-Rated, Three-Phase (15–1000 kVA)

K-rated transformers mitigate Triplen harmonics via a Delta-Wye configuration.

- Aluminum or copper windings
- Isolation transformer with electrostatic shield
- K-4 and K-13 levels

Harmonic Mitigating, Three-Phase (15–1000 kVA)

Harmonic Mitigating transformers mitigate Triplen harmonics via electromagnetic phase relations. They remove 5th and 7th harmonics when using dual devices with a 0° and a +30° phase shift. They further reduce 11th and 13th harmonics when a +15° or -15° shift is added to the dual devices. Available with:

- Aluminum or copper windings
- Isolation transformer

NEMA Premium

As a partner in the NEMA Premium Transformer Program, Schneider Electric has determined that this product meets the NEMA Premium Efficiency specifications for premium energy efficiency.

Table 6.1: 480 V Delta Primary, 208Y/120 Secondary

kVA	Catalog No.	Taps	Weight (lbs)	Enclo-sure
NP Series for Typical Non-Linear Load Service— K-9 Rated—Copper Windings; 130 °C Rise				
15	EP15T3HNISCUNP	6–2.5% 2+4–	310	17D
30	EP30T3HNISCUNP	6–2.5% 2+4–	340	18D
45	EP45T3HNISCUNP	6–2.5% 2+4–	418	20D
75	EP75T3HNISCUNP	6–2.5% 2+4–	642	21D
112.5	EP112T3HNISCUNP	6–2.5% 2+4–	725	22D
150	EP150T3HNISCUNP	6–2.5% 2+4–	915	24D
225	EP225T3HNISCUNP	6–2.5% 2+4–	1125	25D
300	EP300T3HNISCUNP	4–2.5% 2+2–	1535	30D
NP Series for Typical Non-Linear Load Service— K-9Rated—Copper Windings; 115 °C Rise				
15	EP15T3HFISCUNP	6–2.5% 2+4–	310	17D
30	EP30T3HFISCUNP	6–2.5% 2+4–	340	18D
45	EP45T3HFISCUNP	6–2.5% 2+4–	418	20D
75	EP75T3HFISCUNP	6–2.5% 2+4–	642	20D
112.5	EP112T3HFISCUNP	6–2.5% 2+4–	725	22D
150	EP150T3HFISCUNP	6–2.5% 2+4–	915	24D
225	EP225T3HFISCUNP	6–2.5% 2+4–	1125	25D
300	EP300T3HFISCUNP	4–2.5% 2+2–	1535	25D
NLP Series for More Severe Non-Linear Load Service—K-13 Rated—Copper Windings; 150 °C Rise				
15	EP15T3HISCUNLP	6–2.5% 2+4–	260	17D
30	EP30T3HISCUNLP	6–2.5% 2+4–	430	18D
45	EP45T3HISCUNLP	6–2.5% 2+4–	730	20D
75	EP75T3HISCUNLP	6–2.5% 2+4–	640	20D
112.5	EP112T3HISCUNLP	6–2.5% 2+4–	985	22D
150	EP150T3HISCUNLP	6–2.5% 2+4–	1135	24D
225	EP225T3HISCUNLP	6–2.5% 2+4–	1477	25D
300	EP300T68HISCUNLP	4–2.5% 2+2–	2650	30D

© 2017 Schneider Electric
All Rights Reserved

Obsolete—October 1, 2015

Table 6.2: Harmonic Mitigating, 480 Primary to 208zz/120 Secondary; Copper Windings

kVA	Catalog No.	Taps	Weight (lbs)	Enclo-sure
0° Phase Shift				
15	HM15T208HNCUEP	6–2.5% 2+4–	310	17D
30	HM30T208HNCUEP	6–2.5% 2+4–	340	17D
45	HM45T208HNCUEP	6–2.5% 2+4–	418	18D
75	HM75T208HNCUEP	6–2.5% 2+4–	642	20D
112.5	HM112T208HNCUEP	6–2.5% 2+4–	725	21D
150	HM150T208HNCUEP	6–2.5% 2+4–	915	22D
225	HM225T208HNCUEP	6–2.5% 2+4–	1125	24D
300	HM300T208HNCUEP	6–2.5% 2+4–	1535	25D
30° Phase Shift				
15	HM15T255HNCUEP	3-5%1+2-	310	17D
30	HM30T255HNCUEP	3-5%1+2-	340	17D
45	HM45T255HNCUEP	3-5%1+2-	418	18D
75	HM75T255HNCUEP	3-5%1+2-	642	20D
112.5	HM112T255HNCUEP	3-5%1+2-	725	21D
150	HM150T255HNCUEP	3-5%1+2-	915	22D
225	HM225T255HNCUEP	3-5%1+2-	1125	24D
300	HM300T255HNCUEP	3-5%1+2-	1535	25D
+15° Phase Shift				
15	HM15T251HNCUEP	6–2.5% 2+4–	310	17D
30	HM30T251HNCUEP	6–2.5% 2+4–	340	17D
45	HM45T251HNCUEP	6–2.5% 2+4–	418	18D
75	HM75T251HNCUEP	6–2.5% 2+4–	642	20D
112.5	HM112T251HNCUEP	6–2.5% 2+4–	725	21D
150	HM150T251HNCUEP	6–2.5% 2+4–	915	22D
225	HM225T251HNCUEP	6–2.5% 2+4–	1125	24D
300	HM300T251HNCUEP	6–2.5% 2+4–	1535	25D
-15° Phase Shift				
15	HM15T259HNCUEP	6–2.5% 2+4–	310	17D
30	HM30T259HNCUEP	6–2.5% 2+4–	340	17D
45	HM45T259HNCUEP	6–2.5% 2+4–	418	18D
75	HM75T259HNCUEP	6–2.5% 2+4–	642	20D
112.5	HM112T259HNCUEP	6–2.5% 2+4–	725	21D
150	HM150T259HNCUEP	6–2.5% 2+4–	915	22D
225	HM225T259HNCUEP	6–2.5% 2+4–	1125	24D
300	HM300T259HNCUEP	6–2.5% 2+4–	1535	25D

Additional temperature rises are available; for part numbers, see the Schneider Electric Product Configurator.

© 2017 Schneider Electric
All Rights Reserved
2/15/2017

Drive Isolation Transformers

Special design considerations must be made for the requirements of both adjustable frequency and dc motor drive power isolation. Allowance for high surge, harmonic and offset currents are taken into account in the design of Square D™ brand drive isolation transformers. Drive isolation transformers are not shielded isolation transformers, but act to lessen transient generation into the supply power and act as a buffer for SCR current surges.

Table 6.3: Three-Phase 60 Hz; Class B (IEEE Standard 597-1983); 460 V Delta Primary

kVA	Catalog No.	Full Capacity Taps	Weight (lbs) *[1]*	Enclosure *[1][2]*
460 V Delta Primary, 460Y/265 V Secondary, 150 °C Rise				
7.5	7T145HDIT	2–5%1 + 1–	180	17D
11	11T145HDIT	2–5%1 + 1–	180	17D
15	15T145HDIT	2–5%1 + 1–	190	17D
20	20T145HDIT	2–5%1 + 1–	210	17D
27	27T145HDIT	2–5%1 + 1–	250	17D
34	34T145HDIT	2–5%1 + 1–	295	18D
40	40T145HDIT	2–5%1 + 1–	350	18D
51	51T145HDIT	2–5%1 + 1–	445	20D
63	63T145HDIT	2–5%1 + 1–	465	20D
75	75T145HDIT	2–5%1 + 1–	550	20D
93	93T145HDIT	2–5%1 + 1–	845	22D
118	118T145HDIT	2–5%1 + 1–	920	22D
145	145T145HDIT	2–5%1 + 1–	1025	22D
175	175T145HDIT	2–5%1 + 1–	1120	25D
220	220T145HDIT	2–5%1 + 1–	1200	25D
275	275T145HDIT	2–5%1 + 1–	1500	25D
330	330T145HDIT	2–5%1 + 1–	1390	25D
440	440T145HDIT	2–5%1 + 1–	2700	30D
550	550T145HDIT	2–5%1 + 1–	3800	30D
460 V Delta Primary, 230Y/132 V Secondary, 150 °C Rise				
7.5	7T144HDIT	2–5%1 + 1–	180	17D
11	11T144HDIT	2–5%1 + 1–	180	17D
15	15T144HDIT	2–5%1 + 1–	190	17D
20	20T144HDIT	2–5%1 + 1–	210	17D
27	27T144HDIT	2–5%1 + 1–	250	17D
34	34T144HDIT	2–5%1 + 1–	295	18D
40	40T144HDIT	2–5%1 + 1–	350	18D
51	51T144HDIT	2–5%1 + 1–	445	20D
63	63T144HDIT	2–5%1 + 1–	465	20D
75	75T144HDIT	2–5%1 + 1–	550	20D
93	93T144HDIT	2–5%1 + 1–	845	22D
118	118T144HDIT	2–5%1 + 1–	920	22D
145	145T144HDIT	2–5%1 + 1–	1025	22D
175	175T144HDIT	2–5%1 + 1–	1120	25D
220	220T144HDIT	2–5%1 + 1–	1200	25D
275	275T144HDIT	2–5%1 + 1–	1500	25D
330	330T144HDIT	2–5%1 + 1–	1390	25D
440	440T144HDIT	2–5%1 + 1–	2700	30D
550	550T144HDIT	2–5%1 + 1–	3800	30D

Table 6.4: Three-Phase 60 Hz; Class B (IEEE Standard 597-1983); 230 V Delta Primary

kVA	Catalog No.	Full Capacity Taps	Weight (lbs) *[1]*	Enclosure *[1][2]*
230 V Delta Primary, 460Y/265 V Secondary, 150 °C Rise				
7.5	7T143HDIT	2–5%1 + 1–	180	17D
11	11T143HDIT	2–5%1 + 1–	180	17D
15	15T143HDIT	2–5%1 + 1–	190	17D
20	20T143HDIT	2–5%1 + 1–	210	17D
27	27T143HDIT	2–5%1 + 1–	250	17D
34	34T143HDIT	2–5%1 + 1–	295	18D
40	40T143HDIT	2–5%1 + 1–	350	18D
51	51T143HDIT	2–5%1 + 1–	445	20D
63	63T143HDIT	2–5%1 + 1–	465	20D
75	75T143HDIT	2–5%1 + 1–	550	20D
93	93T143HDIT	2–5%1 + 1–	845	22D
118	118T143HDIT	2–5%1 + 1–	920	22D
145	145T143HDIT	2–5%1 + 1–	1025	22D
175	175T143HDIT	2–5%1 + 1–	1120	25D
220	220T143HDIT	2–5%1 + 1–	1200	25D
275	275T143HDIT	2–5%1 + 1–	1500	25D
330	330T143HDIT	2–5%1 + 1–	1390	25D
440	440T143HDIT	2–5%1 + 1–	2700	30D
550	550T143HDIT	2–5%1 + 1–	3800	30D
230 V Delta Primary, 230Y/132 V Secondary, 150 °C Rise				
7.5	7T142HDIT	2–5%1 + 1–	180	17D
11	11T142HDIT	2–5%1 + 1–	180	17D
15	15T142HDIT	2–5%1 + 1–	190	17D
20	20T142HDIT	2–5%1 + 1–	210	17D
27	27T142HDIT	2–5%1 + 1–	250	17D
34	34T142HDIT	2–5%1 + 1–	295	18D
40	40T142HDIT	2–5%1 + 1–	350	18D
51	51T142HDIT	2–5%1 + 1–	445	20D
63	63T142HDIT	2–5%1 + 1–	465	20D
75	75T142HDIT	2–5%1 + 1–	550	20D
93	93T142HDIT	2–5%1 + 1–	845	22D
118	118T142HDIT	2–5%1 + 1–	920	22D
145	145T142HDIT	2–5%1 + 1–	1025	22D
175	175T142HDIT	2–5%1 + 1–	1120	25D
220	220T142HDIT	2–5%1 + 1–	1200	25D
275	275T142HDIT	2–5%1 + 1–	1500	25D
330	330T142HDIT	2–5%1 + 1–	1390	25D
440	440T142HDIT	2–5%1 + 1–	2700	30D
550	550T142HDIT	2–5%1 + 1–	3800	30D

NOTE: Lugs are furnished by customer.

[1] Not for construction. Contact your nearest Schneider Electric sales office for certified prints.
[2] For enclosure styles, see the dimensions table in Digest Section for Transformers.

© 2017 Schneider Electric
All Rights Reserved

Open Core and Coil Transformers Designed for General Applications for 600 V and Below

Units are designed with 220 °C insulation, aluminum windings, top terminations, compact design to save space, and are UL component recognized for:

- Non-energy efficiency (less than 15 kVA)
  Single-phase 5–10 VA
  Three-phase 3–9 VA
- Energy efficiency (meets Table 4-2 of NEMA TP1–2002)
  Single-phase 15–75 kVA
  Three-phase 15–112.5 kVA

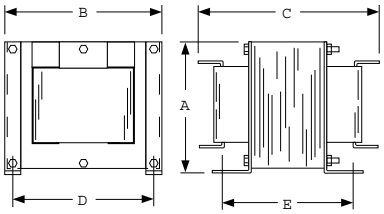

Figure 1

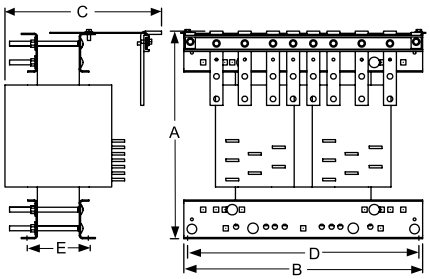

Figure 2

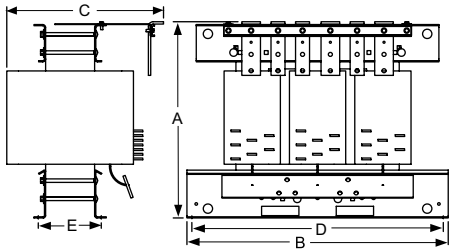

Figure 3

Table 6.5: Single-Phase Open Core and Coil Transformers—240 X 480 V Primary, 120/240 V Secondary, 60 Hz

kVA	Catalog No.	Deg. C Temp. Rise	Full Capacity Taps	Dimensions [3]										Weig-ht (lbs)	Figure
				A		B		C		D		E[4]			
				in	mm	in	mm	in	mm	in	mm	in	mm		
5	5S1HFOC	115	—	8.00	203	9.00	229	11.00	279	8.00	203	8.00	203	66	1
7.5	7S1HFOC	115	—	8.00	203	9.00	229	14.25	362	8.00	203	8.50	216	80	1
10	10S1HFOC	115	—	20.50	521	18.5	470	14.00	356	17.0	432	4.25	108	140	2
15	EE15S3HOC	150	6–2.5% 2+4–[5]	20.50	521	18.5	470	14.00	356	17.0	432	4.25	108	140	2
25	EE25S3HOC	150	6–2.5% 2+4–[5]	20.25	514	18.5	470	14.00	356	17.0	432	5.00	127	200	2
37.5	EE37S3HOC	150	6–2.5% 2+4–[5]	22.00	559	18.5	470	18.00	457	17.0	432	5.50	140	255	2
50	EE50S3HOC	150	6–2.5% 2+4–[5]	22.00	559	18.5	470	18.00	457	17.0	432	6.50	165	310	2
75	EE75S3HOC	150	6–2.5% 2+4–[5]	22.25	565	28.0	711	22.00	559	27.0	686	8.50	216	460	2

[3] Not for construction. Contact your nearest Schneider Electric sales office for certified prints.
[4] Dimensions may vary due to manufacturing process.
[5] When 240 V tap is used, there will be 3–5% taps, 1 above and 2 below.

© 2017 Schneider Electric
All Rights Reserved
2/15/2017

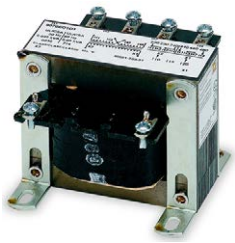

Table 6.6: Regulation Chart for Type EO Transformers

VA (60 Hz)	Secondary Voltage					
	Inrush UL VA at 20% Power Factor			Inrush UL VA at 40% Power Factor		
	95%	90%	85%	95%	90%	85%
25	95	—	146	60	—	119
50	164	213	277	123	168	225
75	387	487	622	284	375	798
100	479	606	770	346	463	613
150	755	1177	1532	567	930	1252
200	1260	1883	2419	910	1462	1950
250	1530	2327	2995	1115	1811	2419
300	2030	2981	3800	1455	2290	3038
350	2920	4586	5981	2180	3637	4903
500	4230	5984	7707	3120	4661	6229
750	7430	11460	14736	5380	8907	11891
1000	10300	16873	21734	7450	13145	17571
1500	19200	30042	39217	14500	23859	32179
2000	27750	45194	60022	21750	36901	50994
3000	31800	82333	108205	26750	66072	89509
5000	86100	148768	202077	72600	126887	175552

Type EO Transformers

Type EO units are designed with exceptional voltage regulation. These control transformers are constructed using traditional materials and manufacturing techniques, and are designed for 25–5000 VA with a 55 °C temperature rise. When exceptional regulation and very low temperature rise are an absolute necessity, choose Type EO units.

Table 6.7: Type EO Transformer Dimensions

VA (60 Hz)	Catalog Number Class 9070	A		B		C		Weight	
		IN	mm	IN	mm	IN	mm	lbs	kg
220x440 V Primary, 110 V Secondary; 230x460 V Primary, 115 V Secondary; or 240x480 V Primary, 120 V Secondary									
25	9070EO17D1	3.31	84	3.00	76	2.50	64	1.9	0.9
50	9070EO1D1	3.31	84	3.00	76	2.50	64	2.2	1.0
75	9070EO18D1	3.78	96	3.38	86	2.81	71	3.5	1.6
100	9070EO2D1	3.78	96	3.38	86	2.81	71	3.8	1.7
150	9070EO3D1	4.44	113	3.75	95	3.13	80	6.0	2.7
200	9070EO19D1	4.81	122	4.50	114	3.75	95	10.5	4.8
250	9070EO15D1	5.19	132	4.50	114	3.75	95	13.2	6.0
300	9070EO04D1	5.56	141	4.50	114	3.75	95	17.2	7.8
500	9070EO51D1	6.56	167	5.25	133	4.38	111	24.5	11.1
750	9070EO61D1	7.94	202	5.25	133	4.38	111	30.5	13.8
1000	9070EO71D1	7.94	202	6.00	152	5.00	127	45.0	20.4
1500	9070EO81D1	8.59	218	7.06	179	6.03	153	56.0	25.4
2000	9070EO91D1	9.22	234	7.06	179	6.03	153	72.0	32.7
3000	9070EO10D1	9.44	239	9.00	229	7.50	191	115.0	52.2
240x480 V Primary, 24 V Secondary									
25	9070EO17D2	3.31	84	3.00	76	2.50	64	1.9	0.9
50	9070EO10D2	3.31	84	3.00	76	2.50	64	2.2	1.0
75	9070EO18D2	3.78	96	3.38	86	2.81	71	3.5	1.6
100	9070EO2D2	3.78	96	3.38	86	2.81	71	3.8	1.7
250	9070EO16D2	6.19	157	4.50	114	3.75	95	13.2	6.0
550 V Primary, 110 V Secondary; 575 V Primary, 115 V Secondary; or 600 V Primary, 120 V Secondary									
200	9070EO19D5	5.56	4.81	122	4.50	114	3.75	10.5	4.8
300	9070EO04D5	5.56	141	4.50	114	3.75	95	17.2	7.8
500	9070EO51D5	6.56	167	5.25	133	4.38	111	24.5	11.1
750	9070EO61D5	7.94	202	5.25	133	4.38	111	30.5	13.8

Table 6.8: Regulation Chart for Type T Transformers

VA (60 Hz)	Secondary Voltage					
	Inrush UL VA at 20% Power Factor			Inrush UL VA at 40% Power Factor		
	95%	90%	85%	95%	90%	85%
50	193	266	339	151	215	282
75	271	396	20	210	318	430
100	339	499	659	266	404	549
150	666	893	1120	529	731	942
200	588	815	1041	459	659	866
250	1416	1910	2388	1057	1494	1936
300	1634	2184	2709	1194	1681	2169
350	1894	2592	3261	1392	2005	621
500	3197	4104	4981	2374	3195	4019
750	3770	5515	7231	2887	4391	5945
1000	6587	9079	11430	4706	6886	9051
1500	19324	23983	28607	15066	19361	23756
2000	31384	38777	6161	24794	31630	38667
3000	26539	39934	52713	19355	30721	42216
5000	53111	85265	116277	39368	66309	93882

Type T and MultiTap™ Transformers

Type T transformers are designed with low impedance windings for excellent voltage regulation and can accommodate the high inrush current associated with contactors, starters, solenoids, and relays. As the most popular and complete line of control transformers with unmatched design innovations for top performance, Type Ts are manufactured using the most advanced insulating materials and are the best choice if size and cost are of concern. It is available in the MultiTap version, designed to respond to the increased need for voltage and stock flexibility. It combines multiple primary voltages with one or more secondary voltages, all in a single transformer.

Selection Guide

1. Determine the inrush and sealed VA of each coil in the control circuit, and the VA of all other components.
2. Total the sealed VA of all operating coils and the VA of all other loads. (This determines the minimal VA size required for the circuit.)
3. Total the inrush VA of all coils that are starting at the same time, and all loads and coils that are running. (Use the regulation chart to give possible units to be used.)
4. Taking the VA size from step 2, go to the standard VA size in the chart. Make sure the inrush VA from the chart is greater than the total VA from step 3. (If not, go to the next larger VA size and repeat.)

If your supply voltage is stable and fluctuates less than 5%, we recommend you use the 90% secondary voltage column. If your supply voltage is not stable and fluctuates more than 10%, we recommend you use the 95% secondary voltage column. We recommend that you never use the 85% secondary voltage column since magnetic devices lose life expectancy if they are continuously started at 85% of rated voltage.

Table 6.9: Type T Transformer Selection

VA		Catalog No.	H	W	D	Weight (lbs)
UL/CSA/NOM	CE		in (mm)	in (mm)	in (mm)	
120 V Primary, 120 V Secondary; 115 V Primary, 115 V Secondary; or 110 V Primary, 110 V Secondary						
50	50	9070T50D24	2.58 (65.5)	3.00 (76.2)	3.09 (78.5)	2.5
75	75	9070T75D24	2.89 (73.4)	3.38 (85.8)	3.34 (84.8)	3.8
100	100	9070T100D24	2.89 (73.4)	3.38 (85.8)	3.34 (84.8)	3.8
150	150	9070T150D24	3.20 (81.3)	3.75 (95.3)	3.59 (91.2)	5.5
200	200	9070T200D24	3.20 (81.3)	3.75 (95.3)	3.59 (91.2)	5.5
250	160	9070T250D24	3.25 (82.6)	3.75 (95.3)	5.25 (133.4)	7.1
300	200	9070T300D24	3.80 (96.5)	4.50 (114.3)	4.70 (119.4)	8.5
350	250	9070T350D24	3.80 (96.5)	4.50 (114.3)	5.09 (129.3)	10.5
500	300	9070T500D24	3.80 (96.5)	4.50 (114.3)	5.46 (138.7)	11.9
750	500	9070T750D24	4.43 (112.5)	5.25 (133.4)	5.66 (143.8)	11.0
1000	630	9070T1000D24	4.43 (112.5)	5.25 (133.4)	6.04 (153.4)	20.6
1500	1000	9070T1500D24	6.16 (156.5)	7.06 (179.3)	5.81 (147.6)	34.0
2000	1500	9070T2000D24	6.16 (156.5)	7.06 (179.3)	7.04 (178.8)	47.0

© 2017 Schneider Electric
All Rights Reserved

Table 6.9 Type T Transformer Selection (cont'd.)

VA		Catalog No.	H	W	D	Weight (lbs)
UL/CSA/NOM	CE		in (mm)	in (mm)	in (mm)	
3000	2000	9070T3000D24	8.46 (214.9)	9.00 (228.6)	6.86 (174.2)	60.0
5000	3000	9070T5000D24	8.46 (214.9)	9.00 (228.6)	8.73 (221.7)	89.0
120 V x 240 V Primary, 120/240 V Secondary; 115 V x 230 V Primary, 115/230 V Secondary; or 110 V x 220 V Primary, 110/220 V Secondary						
50	50	9070T50D55	2.58 (65.5)	3.00 (76.2)	3.09 (78.5)	2.5
75	75	9070T75D55	2.89 (73.4)	3.38 (85.8)	3.34 (84.8)	3.8
100	100	9070T100D55	2.89 (73.4)	3.38 (85.8)	3.34 (84.8)	3.8
150	150	9070T150D55	3.20 (81.3)	3.75 (95.3)	3.59 (91.2)	5.5
200	200	9070T200D55	3.20 (81.3)	3.75 (95.3)	3.59 (91.20)	5.5
250	160	9070T250D55	3.25 (82.6)	3.75 (95.3)	5.25 (133.4)	7.1
300	200	9070T300D55	3.80 (96.5)	4.50 (114.3)	4.70 (119.4)	8.5
350	250	9070T350D55	3.80 (96.5)	4.50 (114.3)	5.09 (129.3)	10.5
500	300	9070T500D55	3.80 (96.5)	4.50 (114.3)	5.46 (138.7)	11.9
750	500	9070T750D55	4.43 (112.5)	5.25 (133.4)	5.66 (143.8)	11.0
1000	630	9070T1000D55	4.43 (112.5)	5.25 (133.4)	6.04 (153.4)	20.6
1500	1000	9070T1500D55	6.16 (156.5)	7.06 (179.3)	5.81 (147.6)	34.0
2000	1500	9070T2000D55	6.16 (156.5)	7.06 (179.3)	7.04 (178.8)	47.0
3000	2000	9070T3000D55	8.46 (214.9)	9.00 (228.6)	6.86 (174.2)	60.0
5000	3000	9070T50000D55	8.46 (214.9)	9.00 (228.6)	8.73 (221.7)	89.0
277 V Primary, 24 V Secondary						
50	50	9070T50D25	2.58 (65.5)	3.00 (76.2)	3.09 (78.5)	2.5
75	75	9070T75D25	2.89 (73.4)	3.38 (85.8)	3.34 (84.8)	3.8
100	100	9070T100D25	2.89 (73.4)	3.38 (85.8)	3.34 (84.8)	3.8
150	150	9070T150D25	3.20 (81.3)	3.75 (95.3)	3.59 (91.2)	5.5
200	200	9070T200D25	3.20 (81.3)	3.75 (95.3)	3.59 (91.20)	5.5
250	160	9070T250D25	3.25 (82.6)	3.75 (95.3)	5.25 (133.4)	7.1
300	200	9070T300D25	3.80 (96.5)	4.50 (114.3)	4.70 (119.4)	8.5
350	250	9070T350D25	3.80 (96.5)	4.50 (114.3)	5.09 (129.3)	10.5
500	300	9070T500D25	3.80 (96.5)	4.50 (114.3)	5.46 (138.7)	11.9
750	500	9070T750D25	4.43 (112.5)	5.25 (133.4)	5.66 (143.8)	11.0
1000	630	9070T1000D25	4.43 (112.5)	5.25 (133.4)	6.04 (153.4)	20.6
600 V Primary, 12/24 V Secondary						
50	50	9070T50D36	2.58 (65.5)	3.00 (76.2)	3.09 (78.5)	2.5
75	75	9070T75D36	2.89 (73.4)	3.38 (85.8)	3.34 (84.8)	3.8
100	100	9070T100D36	2.89 (73.4)	3.38 (85.8)	3.34 (84.8)	3.8
150	150	9070T150D36	3.20 (81.3)	3.75 (95.3)	3.59 (91.2)	5.5
200	200	9070T200D36	3.20 (81.3)	3.75 (95.3)	3.59 (91.20)	5.5
250	160	9070T250D36	3.25 (82.6)	3.75 (95.3)	5.25 (133.4)	7.1
300	200	9070T300D36	3.80 (96.5)	4.50 (114.3)	4.70 (119.4)	8.5
350	250	9070T350D36	3.80 (96.5)	4.50 (114.3)	5.09 (129.3)	10.5
500	300	9070T500D36	3.80 (96.5)	4.50 (114.3)	5.46 (138.7)	11.9
750	500	9070T750D36	4.43 (112.5)	5.25 (133.4)	5.66 (143.8)	11.0
1000	630	9070T1000D36	4.43 (112.5)	5.25 (133.4)	6.04 (153.4)	20.6
480 V Primary, 240 V Secondary; 460 V Primary, 230 V Secondary; or 440 V Primary, 220 V Secondary						
50	50	9070T50D12	2.58 (65.5)	3.00 (76.2)	3.09 (78.5)	2.5
75	75	9070T75D12	2.89 (73.4)	3.38 (85.8)	3.34 (84.8)	3.8
100	100	9070T100D12	2.89 (73.4)	3.38 (85.8)	3.34 (84.8)	3.8
150	150	9070T150D12	3.20 (81.3)	3.75 (95.3)	3.59 (91.2)	5.5
200	200	9070T200D12	3.20 (81.3)	3.75 (95.3)	3.59 (91.2)	5.5
250	160	9070T250D12	3.25 (82.6)	3.75 (95.3)	5.25 (133.4)	7.1
300	200	9070T300D12	3.80 (96.5)	4.50 (114.3)	4.70 (119.4)	8.5
350	250	9070T350D12	3.80 (96.5)	4.50 (114.3)	5.09 (129.3)	10.5
500	300	9070T500D12	3.80 (96.5)	4.50 (114.3)	5.46 (138.7)	11.9
750	500	9070T750D12	4.43 (112.5)	5.25 (133.4)	5.66 (143.8)	11.0
1000	630	9070T1000D12	4.43 (112.5)	5.25 (133.4)	6.04 (153.4)	20.6
1500	1000	9070T1500D12	6.16 (156.5)	7.06 (179.3)	5.81 (147.6)	34.0
2000	1500	9070T2000D12	6.16 (156.5)	7.06 (179.3)	7.04 (178.8)	47.0
3000	2000	9070T3000D12	8.46 (214.9)	9.00 (228.6)	6.86 (174.2)	60.0
5000	3000	9070T5000D12	8.46 (214.9)	9.00 (228.6)	8.73 (221.7)	89.0

© 2017 Schneider Electric
All Rights Reserved
2/15/2017

Model 450R

Model 460R
Model 470R

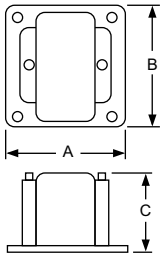

Voltage Transformers

These voltage transformers are designed for line-to-line or line-to-ground connection on the primary voltage indicated. See Table 6.10 Voltage Transformers, UR/cUR Recognized, 60 Hz, page 6-9 to determine the applicable configuration for proper system voltage indication.

- **Model 450R**—designed for switchboard use. This model features high accuracy and burden capacity for excellent performance in metering and indication.
- **Model 460R**—a compact, lightweight design, providing exceptional performance in indicating applications.
- **Model 470R**—a compact, low cost design optimized for maximum accuracy and performace when used with Powerlogic™ circuit monitors.

Table 6.10: Voltage Transformers, UR/cUR Recognized, 60 Hz

Model 450R Thermal Rating: 500 VA @ 30 °C; 300 VA @ 55 °C. Accuracy 0.3W. X.M & Y: 1.2 Z	Model 460R Thermal Rating: 150 VA @ 30 °C; 100 VA @ 55 °C. Accuracy 0.6W: 1.2 X	Model 470R Thermal Rating: 150 VA @ 30 °C; 100 VA @ 55 °C. Accuracy 0.3W: 1.2 X	System Voltage	Winding Ratio
Catalog Number	Catalog Number	Catalog Number		
450R069	460R069	470R069	69/120Y	0.58:1
450R120	460R120	470R120	120/208Y	1:1
450R208	460R208	470R208	120/208Y	1.73:1
450R240	460R240	470R240	240/416Y	2:1
450R288	460R288	470R288	288/500Y *[1]*	2.4:1
450R300	460R300	470R300	300/520Y	2.5:1
450R380	460R380	470R380	220/380Y	3.17:1
450R480	460R480	470R480	480/480Y *[2]*	4:1
450R600	460R600	470R600	600/600Y	5:1

Model	Dimensions (inches)		
	A	B	C
450R	6	7–1/8	5–7/8
460R	4–3/4	4–1/2	3–7/8
470R	4–3/4	4–1/2	3–7/8

Model 54R

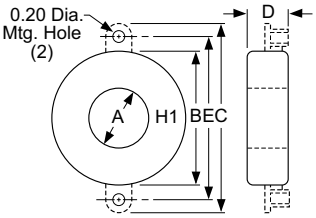

Table 6.11: Dimensions for Models 2NR, 5NR, 54R, and 7RL

Model	Dimensions (inches)				
	A	B	C	D	E
2NR	1.13	2.38	—	.94	—
5NR	1.56	3.50	—	1.06	—
54R	1.56	3.50	4.56	1.06	4.00
7RL	2.25	4.38	—	1.38	—

Current Transformers

Table 6.12: General Purpose Compact Units, UR/cUR Recognized

Window Size (inches)	Catalog Number (without brackets)	Current Rating (Amperes)	VA 60 Hz	VA 400 Hz	Accuracy (At Rated Current)	Rating Factor 30 °C Ambient
1-1/8	2NR500	50:5	1.0	2.0	= 2%	1.0
	2NR600	60:5	1.0	2.0	= 2%	1.0
	2NR750	75:5	1.5	3.0	= 2%	1.0
	2NR800	80:5	1.5	3.0	= 2%	1.0
	2NR101	100:5	2.0	4.0	= 1%	1.0
	2NR121	120:5	2.5	5.0	= 1%	1.0
	2NR1250	125:5	2.5	5.0	= 1%	1.0
	2NR151	150:5	2.5	5.0	= 1%	1.0
	2NR201	200:5	2.5	5.0	= 1%	1.0
	2NR251	250:5	2.5	5.0	= 1%	1.0
	2NR301	300:5	2.5	5.0	= 1%	1.0
1-9/16	5NR101	100:5	2.0	4.0	= 1%	1.0
	5NR151	150:5	2.5	5.0	= 1%	1.0
	5NR201	200:5	5.0	12.5	= 1%	1.0
	5NR251	250:5	5.0	12.5	= 1%	1.0
	5NR301	300:5	5.0	12.5	= 1%	1.0
	5NR401	400:5	12.5	25.0	= 1%	1.0
	5NR501	500:5	12.5	25.0	= 1%	1.0
	5NR601	600:5	25.0	50.0	= 1%	1.0
1-9/16	54R101	100:5	2.0	4.0	= 1%	1.0
	54R151	150:5	2.5	5.0	= 1%	1.0
	54R201	200:5	5.0	12.5	= 1%	1.0
	54R251	250:5	5.0	12.5	= 1%	1.0
	54R301	300:5	5.0	12.5	= 1%	1.0
	54R401	400:5	12.5	25.0	= 1%	1.0
	54R501	500:5	12.5	25.0	= 1%	1.0
	54R601	600:5	25.0	50.0	= 1%	1.0
2-1/4	7RL500	50:5	2.5	5.0	= 1%	1.5
	7RL101	100:5	2.5	5.0	= 1%	1.5
	7RL151	150:5	2.5	5.0	= 1%	1.5
	7RL201	200:5	5.0	10.0	= 1%	1.5
	7RL251	250:5	5.0	10.0	= 1%	1.5
	7RL301	300:5	5.0	10.0	= 1%	1.5
	7RL401	400:5	12.5	25.0	= 1%	1.5
	7RL501	500:5	12.5	25.0	= 1%	1.5
	7RL601	600:5	12.5	25.0	= 1%	1.5
	7RL751	750:5	12.5	25.0	= 1%	1.5
	7RL801	800:5	12.5	25.0	= 1%	1.5
	7RL102	1000:5	25.0	50.0	= 1%	1.5
	7RL122	1200:5	25.0	50.0	= 1%	1.5
	7RL152	1500:5	25.0	50.0	= 1%	1.5

[1] For use on 277/480 Wye systems.
[2] For use on 480 V Delta systems.

© 2017 Schneider Electric
All Rights Reserved

Models 64R, 74R

Models 66R, 76R

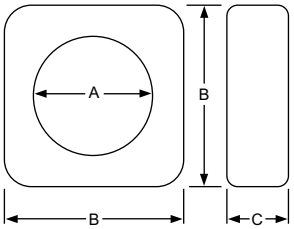

Models 64R, 66R, 74R, 76R,

Table 6.13: Dimensions for 64R, 66R, 74R, and 76R

Model	Dimensions (inches)		
	A	B	C
64R	1-15/16	4-3/16	1-1/2
66R	1-15/16	4-3/16	31/16
74R	2-11/32	4-11/16	1-5/8
76R	2-11/32	4-11/16	3-1/4

Toroidal Current Transformers (64R, 74R, 66R, 76R)

Table 6.14: Toroidal Current Transformers, UR/cUR Recognized, 25–400 Hz

Window Size (inches)	Catalog Number (without brackets) *[3]*	Current Rating (Amperes)	Relay Class	ANSI Accuracy Classification—60 Hz Metering Class					Rating Factor 30 °C Ambient
				B-0.1	B-0.2	B-0.5	B-0.9	B-1.8	
1-15/16	64R101	100:5	—	1.2	2.4	—	—	—	1.33
	64R151	150:0	—	1.2	1.2	—	—	—	1.33
	64R201	200:5	—	1.2	1.2	2.4	—	—	1.33
	64R251	250:5	—	0.6	0.6	1.2	—	—	1.33
	64R301	300:5	—	0.6	0.6	1.2	2.4	—	1.33
	64R401	400:5	—	0.3	0.6	0.6	1.2	—	1.33
	64R501	500:5	—	0.3	0.3	0.6	0.6	—	1.33
	64R601	600:5	—	0.3	0.3	0.3	0.6	1.2	1.33
	64R751	750:5	—	0.3	0.3	0.3	0.6	0.6	1.33
1-15/16	66R101	100:5	—	1.2	2.4	—	—	—	1.33
	66R151	150:0	—	0.6	1.2	2.4	2.4	—	1.33
	66R201	200:5	C10	0.6	0.6	1.2	2.4	—	1.33
	66R251	250:5	C10	0.3	0.6	0.6	1.2	2.4	1.33
	66R301	300:5	C10	0.3	0.3	0.6	1.2	2.4	1.33
	66R401	400:5	C10	0.3	0.3	0.3	0.6	1.2	1.33
	66R501	500:5	C20	0.3	0.3	0.3	0.6	0.6	1.33
	66R601	600:5	C20	0.3	0.3	0.3	0.3	0.6	1.33
	66R751	750:5	C20	0.3	0.3	0.3	0.3	0.3	1.33
2-11/32	74R201	200:5	—	1.2	1.2	0.6	—	—	1.33
	74R251	250:5	—	1.2	1.2	0.6	1.2	—	1.33
	74R301	300:5	—	0.6	0.6	1.2	2.4	—	1.33
	74R401	400:5	—	0.3	0.3	0.6	1.2	—	1.33
	74R501	500:5	—	0.3	0.3	0.6	0.6	1.2	1.33
	74R601	600:5	—	0.3	0.3	0.3	0.6	1.2	1.33
	74R751	750:5	—	0.3	0.3	0.6	0.6	1.2	1.33
	74R801	800:5	—	0.3	0.3	0.3	0.6	1.2	1.33
	74R102	1000:5	—	0.3	0.3	0.3	0.3	0.6	1.33
	74R122	1200:5	—	0.3	0.3	0.3	0.3	0.6	1.33
	74R152	1500:5	—	0.3	0.3	0.3	0.3	0.6	1.00
2-11/32	76R201	200:5	C10	0.6	0.6	1.2	2.4	2.4	1.33
	76R251	250:5	C10	0.3	0.6	1.2	1.2	2.4	1.33
	76R301	300:5	C10	0.3	0.3	0.6	1.2	1.2	1.33
	76R401	400:5	C10	0.3	0.3	0.3	0.6	1.2	1.33
	76R501	500:5	C10	0.3	0.3	0.3	0.3	0.6	1.33
	76R601	600:5	C20	0.3	0.3	0.3	0.3	0.6	1.33
	76R751	750:5	C20	0.3	0.3	0.3	0.3	0.6	1.33
	76R801	800:5	C20	0.3	0.3	0.3	0.3	0.3	1.33
	76R102	1000:5	C20	0.3	0.3	0.3	0.3	0.3	1.33
	76R122	1200:5	C20	0.3	0.3	0.3	0.3	0.3	1.33
	76R152	1500:5	C20	0.3	0.3	0.3	0.3	0.3	1.00

Models 100R, 110R, 120R, 140R

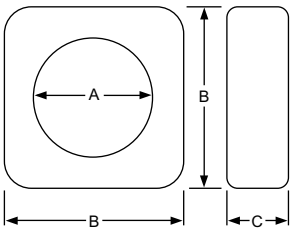

100R, 110R, 120R, and 140R

Table 6.15: Dimensions for 100R, 110R, 120R, and 140R

Model	Dimensions (inches)		
	A	B	C
100R	4	7	2-1/8
110R	4	7	2-7/8
120R	5-3/4	8-1/2	2-1/8
140R	8-1/8	11	3

Toroidal Current Transformers (110R, 110R, 120R, 140R)

Table 6.16: Toroidal Current Transformers, UR/cUR Recognized, 25–400 Hz

Window Size (inches)	Catalog Number (without brackets) *[4]*	Current Rating (Amperes)	Relay Class	ANSI Accuracy Classification—60 Hz Metering Class					Rating Factor 30 °C Ambient
				B-0.1	B-0.2	B-0.5	B-0.9	B-1.8	
4	100R201	200:5	C10	0.6	1.2	2.4	—	—	1.33
	100R301	300:5	C10	0.3	0.6	1.2	1.2	2.4	1.33
	100R401	400:5	C20	0.3	0.3	0.6	1.2	1.2	1.33
	100R501	500:5	C20	0.3	0.3	0.6	0.6	1.2	1.33
	100R601	600:5	C20	0.3	0.3	0.3	0.6	0.6	1.33
	100R801	800:5	C20	0.3	0.3	0.3	0.3	0.6	1.33
	100R102	1000:5	C50	0.3	0.3	0.3	0.3	0.3	1.33
	100R122	1200:5	C50	0.3	0.3	0.3	0.3	0.3	1.33
	100R152	1500:5	C50	0.3	0.3	0.3	0.3	0.3	1.33
	100R162	1600:5	C50	0.3	0.3	0.3	0.3	0.3	1.33
	100R202	2000:5	C50	0.3	0.3	0.3	0.3	0.3	1.33
4	110R201	200:5	C20	0.6	0.6	1.2	2.4	—	1.33
	110R301	300:5	C20	0.3	0.3	0.6	1.2	2.4	1.33
	110R401	400:5	C20	0.3	0.3	0.3	0.6	1.2	1.33
	110R501	500:5	C50	0.3	0.3	0.3	0.6	0.6	1.33
	110R601	600:5	C50	0.3	0.3	0.3	0.3	0.6	1.33
	110R801	800:5	C50	0.3	0.3	0.3	0.3	0.3	1.33
	110R102	1000:5	C100	0.3	0.3	0.3	0.3	0.3	1.33
	110R122	1200:5	C100	0.3	0.3	0.3	0.3	0.3	1.33
	110R152	1500:5	C100	0.3	0.3	0.3	0.3	0.3	1.33
	110R162	1600:5	C100	0.3	0.3	0.3	0.3	0.3	1.33
	110R202	2000:5	C100	0.3	0.3	0.3	0.3	0.3	1.33
5-3/4	120R201	200:5	C10	1.2	2.4	2.4	—	—	1.33
	120R301	300:5	C10	0.6	1.2	2.4	2.4	—	1.33
	120R401	400:5	C20	0.3	0.6	1.2	1.2	2.4	1.33
	120R501	500:5	C20	0.3	0.3	0.6	1.2	2.4	1.33
	120R601	600:5	C20	0.3	0.3	0.6	0.6	1.2	1.33
	120R801	800:5	C20	0.3	0.3	0.3	0.6	0.6	1.33
	120R102	1000:5	C50	0.3	0.3	0.3	0.3	0.6	1.33
	120R122	1200:5	C50	0.3	0.3	0.3	0.3	0.3	1.33
	120R152	1500:5	C50	0.3	0.3	0.3	0.3	0.3	1.33
	120R162	1600:5	C50	0.3	0.3	0.3	0.3	0.3	1.33
	120R202	2000:5	C50	0.3	0.3	0.3	0.3	0.3	1.33
	120R252	2500:5	C50	0.3	0.3	0.3	0.3	0.3	1.33
	120R302	3000:5	C50	0.3	0.3	0.3	0.3	0.3	1.33
	120R402	4000:5	—	0.3	0.3	0.3	0.3	0.3	1.00

[3] For mounting brackets, refer to Bushing Current Transformers 50–400 Hz, page 6-14
[4] For mounting brackets, refer to Bushing Current Transformers 50–400 Hz, page 6-14

© 2017 Schneider Electric
All Rights Reserved
2/15/2017

Table 6.16 Toroidal Current Transformers, UR/cUR Recognized, 25–400 Hz (cont'd.)

Window Size (inches)	Catalog Number (without brackets) *[4]*	Current Rating (Amperes)	Relay Class	ANSI Accuracy Classification—60 Hz Metering Class					Rating Factor 30 °C Ambient
				B-0.1	B-0.2	B-0.5	B-0.9	B-1.8	
8-1/8	140R500	50:5	—	For Ground Fault Sensing			—	—	1.33
	140R101	100:5	—				—	—	1.33
8-1/8	140R401	400:5	C20	0.6	0.6	1.2	1.2	2.4	1.33
	140R501	500:5	C20	0.3	0.3	0.6	1.2	1.2	1.33
	140R601	600:5	C20	0.3	0.3	0.6	0.6	1.2	1.33
	140R801	800:5	C50	0.3	0.3	0.3	0.6	0.6	1.33
	140R102	1000:5	C50	0.3	0.3	0.3	0.3	0.6	1.33
	140R122	1200:5	C100	0.3	0.3	0.3	0.3	0.3	1.33
	140R152	1500:5	C100	0.3	0.3	0.3	0.3	0.3	1.33
	140R202	2000:5	C100	0.3	0.3	0.3	0.3	0.3	1.33
	140R252	2500:5	C100	0.3	0.3	0.3	0.3	0.3	1.33
	140R302	3000:5	C100	0.3	0.3	0.3	0.3	0.3	1.33
	140R402	4000:5	C100	0.3	0.3	0.3	0.3	0.3	1.33
	140R502	5000:5	C100	0.3	0.3	0.3	0.3	0.3	1.00
	140R602	6000:5	C100	0.3	0.3	0.3	0.3	0.3	1.00

Toroidal Current Transformers (152R, 170R, 180R, 210R)

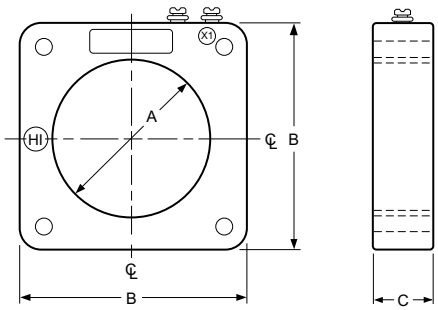

Models 152R, 170R, 180R, 210R

Table 6.17: Dimensions for Models 152R, 170R, 180R, and 210R

Model	Dimensions (inches)		
	A	B	C
152R	6.88	12.25	4.12
170R	4.25	6.75	1.31
180R	2.50	4.50	2.12
210R	6.25	9.50	2.87

Table 6.18: Toroidal Current Transformers, UR/cUR Recognized, 25–400 Hz

Window Size (inches)	Catalog Number (without brackets) *[5]*	Current Rating (Amperes)	Relay Class	ANSI Accuracy Classification—60 Hz Metering Class					Rating Factor 30 °C Ambient
				B-0.1	B-0.2	B-0.5	B-0.9	B-1.8	
6-7/8	152R500	50:5	C10	1.2	—	—	—	—	1.33
	152R101	100:5	C20	1.2	2.4	—	—	—	1.33
	152R151	150:5	C50	0.6	1.2	2.4	—	—	1.33
	152R201	200:5	C50	0.6	0.6	1.2	2.4	2.4	1.33
	152R251	250:5	C50	0.3	0.6	0.6	1.2	2.4	1.33
	152R301	300:5	C100	0.3	0.3	0.6	1.2	1.2	1.33
	152R401	400:5	C100	0.3	0.3	0.3	0.6	1.2	1.33
	152R501	500:5	C100	0.3	0.3	0.3	0.3	0.6	1.33
	152R601	600:5	C200	0.3	0.3	0.3	0.3	0.6	1.33
	152R801	800:5	C200	0.3	0.3	0.3	0.3	0.3	1.33
	152R102	1000:5	C200	0.3	0.3	0.3	0.3	0.3	1.33
	152R122	1200:5	C400	0.3	0.3	0.3	0.3	0.3	1.33
	152R152	1500:5	C400	0.3	0.3	0.3	0.3	0.3	1.33
	152R162	1600:5	C400	0.3	0.3	0.3	0.3	0.3	1.33
	152R202	2000:5	C400	0.3	0.3	0.3	0.3	0.3	1.33
	152R252	2500:5	C400	0.3	0.3	0.3	0.3	0.3	1.33
	152R302	3000:5	C400	0.3	0.3	0.3	0.3	0.3	1.33
	152R402	4000:5	C800	0.3	0.3	0.3	0.3	0.3	1.33
4-1/4	170R201	200:5	—	1.2	0.6	2.4	—	—	1.33
	170R251	250:5	—	0.6	0.6	2.4	—	—	1.33
	170R301	300:5	—	0.6	0.6	1.2	2.4	—	1.33
	170R401	400:5	—	0.6	0.6	0.6	1.2	—	1.33
	170R501	500:5	—	0.3	0.6	0.6	1.2	—	1.33
	170R601	600:5	—	0.3	0.3	0.6	1.2	2.4	1.33
	170R751	750:5	C10	0.3	0.3	0.6	0.6	1.2	1.33
	170R801	800:5	C10	0.3	0.3	0.3	0.6	1.2	1.33
	170R102	1000:5	C10	0.3	0.3	0.3	0.3	0.6	1.33
	170R122	1200:5	C10	0.3	0.3	0.3	0.3	0.6	1.33
	170R152	1500:5	—	0.3	0.3	0.3	0.3	0.6	1.33
	170R162	1600:5	—	0.3	0.3	0.3	0.3	0.6	1.33
	170R202	2000:5	—	0.3	0.3	0.3	0.3	0.3	1.33
	170R252	2500:5	—	0.3	0.3	0.3	0.3	0.3	1.33
2-1/2	180R101	100:5	—	2.4	2.4	—	—	—	1.33
	180R151	150:5	—	1.2	2.4	—	—	—	1.33
	180R201	200:5	—	1.2	1.2	2.4	—	—	1.33
	180R251	250:5	—	0.6	1.2	2.4	2.4	—	1.33
	180R301	300:5	—	0.6	0.6	1.2	2.4	—	1.33
	180R401	400:5	—	0.3	0.3	0.6	1.2	2.4	1.33
	180R501	500:5	—	0.3	0.3	0.6	0.6	1.2	1.33
	180R601	600:5	—	0.3	0.3	0.3	0.6	1.2	1.33
	180R751	750:5	—	0.3	0.3	0.3	0.3	0.6	1.33
	180R801	800:5	—	0.3	0.3	0.3	0.6	1.2	1.33
	180R102	1000:5	—	0.3	0.3	0.3	0.6	0.6	1.33
	180R122	1200:5	—	0.3	0.3	0.3	0.3	0.6	1.33
	180R152	1500:5	—	0.3	0.3	0.3	0.3	0.3	1.33
2-1/2	210R122	1200:5	C100	0.3	0.3	0.3	0.3	0.3	1.33
	210R162	1600:5	C100	0.3	0.3	0.3	0.3	0.3	1.33
	210R202	2000:5	C100	0.3	0.3	0.3	0.3	0.3	1.33
	210R252	2500:5	C200	0.3	0.3	0.3	0.3	0.3	1.33
	210R302	3000:5	C200	0.3	0.3	0.3	0.3	0.3	1.0
	210R402	4000:5	C200	0.3	0.3	0.3	0.3	0.3	1.0

[4] For mounting brackets, refer to Bushing Current Transformers 50–400 Hz, page 6-14
[5] For mounting brackets, refer to Bushing Current Transformers 50–400 Hz, page 6-14

© 2017 Schneider Electric
All Rights Reserved

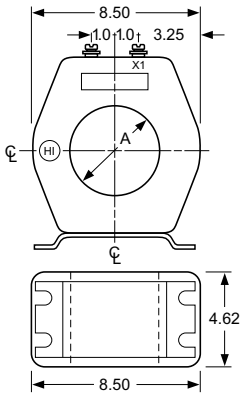

Models 200R, 201R, 202R, 203R

Table 6.19: Dimensions for Models 200R, 201R, 202R, and 203R

Model *[6]*	Dimensions A (inches)
200R	2.50
201R	3.50
202R	4.50
203R	5.25

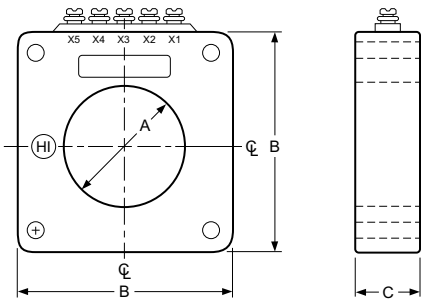

Models 151R, 312R

Table 6.22: Dimensions for Models 151R and 312R

Model	Dimensions (inches)		
	A	B	C
151R	6.88	12.25	4.12
312R	4.50	11.00	2.38

Toroidal Current Transformers (200R, 201R, 202R, 203R)

Table 6.20: Toroidal Current Transformers, UR/cUR Recognized, 25–400 Hz

Window Size (inches)	Catalog Number (without brackets) *[7]*	Current Rating (Amperes)	Relay Class	ANSI Accuracy Classification—60 Hz Metering Class					Rating Factor 30 °C Ambient
				B-0.1	B-0.2	B-0.5	B-0.9	B-1.8	
2-1/2	200R101	100:5	C50	0.6	1.2	1.2	—	—	1.5
	200R151	150:0	C50	0.3	0.6	0.6	1.2	2.4	1.5
	200R201	200:5	C100	0.3	0.3	0.6	1.2	1.2	1.5
	200R251	250:5	C100	0.3	0.3	0.3	0.6	1.2	1.5
	200R301	300:5	C100	0.3	0.3	0.3	0.3	0.6	1.5
	200R401	400:5	C200	0.3	0.3	0.3	0.3	0.3	1.5
	200R501	500:5	C200	0.3	0.3	0.3	0.3	0.3	1.5
	200R601	600:5	C200	0.3	0.3	0.3	0.3	0.3	1.5
3-1/2	201R101	100:5	C20	1.2	1.2	2.4	2.4	—	1.5
	201R151	150:5	C50	0.3	0.6	1.2	2.4	2.4	1.5
	201R201	200:5	C50	0.3	0.3	0.6	1.2	2.4	1.5
	201R251	250:5	C100	0.3	0.3	0.6	1.2	1.2	1.5
	201R301	300:5	C100	0.3	0.3	0.3	0.6	1.2	1.5
	201R401	400:5	C100	0.3	0.3	0.3	0.3	0.6	1.5
	201R501	500:5	C200	0.3	0.3	0.3	0.3	0.3	1.5
	201R601	600:5	C200	0.3	0.3	0.3	0.3	0.3	1.5
	201R751	750:5	C200	0.3	0.3	0.3	0.3	0.3	1.5
	201R801	800:5	C200	0.3	0.3	0.3	0.3	0.3	1.5
4-1/2	202R101	100:5	C20	1.2	2.4	2.4	—	—	1.5
	202R151	150:5	C20	1.2	1.2	2.4	2.4	—	1.5
	202R201	200:5	C50	0.3	0.6	1.2	1.2	2.4	1.5
	202R251	250:5	C50	0.3	0.3	0.6	1.2	1.2	1.5
	202R301	300:5	C50	0.3	0.3	0.6	0.6	1.2	1.5
	202R401	400:5	C100	0.3	0.3	0.3	0.3	0.6	1.5
	202R501	500:5	C100	0.3	0.3	0.3	0.3	0.8	1.5
	202R601	600:5	C100	0.3	0.3	0.3	0.3	0.3	1.5
	202R751	750:5	C200	0.3	0.3	0.3	0.3	0.3	1.5
	202R801	800:5	C200	0.3	0.3	0.3	0.3	0.3	1.5
	202R102	1000:5	C200	0.3	0.3	0.3	0.3	0.3	1.5
5-1/4	203R101	100:5	C20	1.2	2.4	—	—	—	1.5
	203R151	150:5	C20	0.6	1.2	2.4	2.4	—	1.5
	203R201	200:5	C20	0.3	0.6	1.2	2.4	2.4	1.5
	203R251	250:5	C20	0.3	0.6	1.2	1.2	2.4	1.5
	203R301	300:5	C50	0.3	0.3	0.6	1.2	1.2	1.5
	203R401	400:5	C50	0.3	0.3	0.6	0.6	1.2	1.5
	203R501	500:5	C100	0.3	0.3	0.3	0.3	0.6	1.5
	203R601	600:5	C100	0.3	0.3	0.3	0.3	0.6	1.5
	203R751	750:5	C100	0.3	0.3	0.3	0.3	0.3	1.5
	203R801	800:5	C100	0.3	0.3	0.3	0.3	0.3	1.5
	203R102	1000:5	C200	0.3	0.3	0.3	0.3	0.3	1.5
	203R122	1200:5	C200	0.3	0.3	0.3	0.3	0.3	1.5
	203R152	1500:5	C200	0.3	0.3	0.3	0.3	0.3	1.5
	203R162	1600:5	C200	0.3	0.3	0.3	0.3	0.3	1.33
	203R202	2000:5	C200	0.3	0.3	0.3	0.3	0.3	1.33
	203R252	2500:5	C200	0.3	0.3	0.3	0.3	0.3	1.33
	203R302	3000:5	C200	0.3	0.3	0.3	0.3	0.3	1.33

Shorting Terminal Blocks

Table 6.21: Shorting Terminal Blocks

Catalog No.	Description
3090TB4	Shorting terminal block (4-pole)
3090TB6	Shorting terminal block (6-pole)

Multi-Ratio Current Transformers

Table 6.23: Multi-Ratio Transformers, UR/cUR Recognized 60 Hz-Model 312R, 25–400 Hz-Model 151R

Window Size (inches)	Catalog Number (without brackets) *[8]*	Current Rating *[9]* (Amperes)	Relay Class *[10]*	ANSI Accuracy Classification – 60 Hz Metering Class					Rating Factor 30 °C Ambient
				B-0.1	B-0.2	B-0.5	B-0.9	B-1.8	
4-1⁄2	312R601	600:5MR	C100	—	—	—	—	—	1.5
	312R122	1200:5MR	C200	—	—	—	—	—	1.5
	312R202	2000:5MR	C400	—	—	—	—	—	1.5
	312R302	3000:5MR	C400	—	—	—	—	—	1.5
	312R402	4000:5MR	C400	—	—	—	—	—	1.33
6-7⁄8	151R601	600:5MR	C200	—	—	—	—	—	1.33
	151R122	1200:5MR	C400	—	—	—	—	—	1.33
	151R202	2000:5MR	C400	—	—	—	—	—	1.33
	151R302	3000:5MR	C400	—	—	—	—	—	1.33
	151R402	4000:5MR	C800	—	—	—	—	—	1.33

Table 6.24: Multi-Ratio Taps (Models 151R, 312R, 781R, 786R)

Nominal Ratio	Current Ratio *[11]* (Amperes)
600:5	600/500/450/400/300/250/200/150/100/50:5
1200:5	1200/1000/900/800/600/500/400/300/200/100:5
2000:5	2000/1600/1500/1200/1100/800/500/400/300:5
3000:5	3000/2500/2200/2000/1500/1200/1000/800/500/300:5
4000:5	4000/3500/3000/2500/2000/1500/1000/500

[6] Base is included.
[7] For mounting brackets, refer to Bushing Current Transformers 50–400 Hz, page 6-14
[8] For mounting brackets, refer to Bushing Current Transformers 50–400 Hz, page 6-14
[9] For multi-ratio (MR) taps, refer to the Multi-Ratio Taps table.
[10] Relay class applies to nominal ratio only.
[11] Taps in acordance with ANSI C57.13 and NEMA SG-4.

© 2017 Schneider Electric
All Rights Reserved
2/15/2017

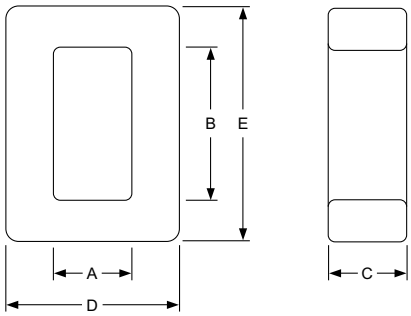

260R, 560R

Table 6.25: Dimensions for Models 260R, and 560R

Model	Dimensions (inches)				
	A	B	C	D	E
260R	2.13	4.25	2.12	4.88	7.25
560R	3.75	7.45	1.13	5.53	11.19

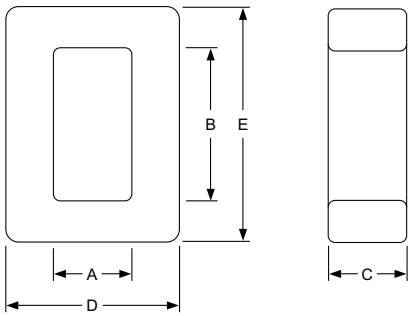

Models 270R, and 273

Table 6.27: Dimensions for Models 270R, and 273

Model	Dimensions (inches)				
	A	B	C	D	E
270R	3.56	8.81	3.00	9.25	13.06
273	3.50	6.25	3.27	9.25	11.28

Rectangular Window Current Transformers

Table 6.26: Rectangular Window Transformers, UR/cUR Recognized, 50–400 Hz

Window Size (inches)	Catalog Number (without brackets) *[12]*	Current Rating (Amperes)	ANSI Accuracy Classification—60 Hz Metering Class					Rating Factor 30 °C Ambient
			B-0.1	B-0.2	B-0.5	B-0.9	B-1.8	
2-1/8 x 4-1/4	260R101	100:5	1.2	2.4	—	—	—	1.33
	260R151	150:5	1.2	2.4	—	—	—	1.33
	260R201	200:5	1.2	1.2	—	—	—	1.33
	260R301	300:5	0.6	0.6	—	—	—	1.33
	260R401	400:5	0.6	0.6	—	—	—	1.33
	260R601	600:5	0.3	0.3	—	—	—	1.33
	260R801	800:5	0.3	0.3	—	—	—	1.33
	260R122	1200:5	0.3	0.3	—	—	—	1.33
	260R162	1600:5	0.3	0.3	—	—	—	1.33
	260R202	2000:5	0.3	0.3	—	—	—	1.33
	260R252	2500:5	0.3	0.3	—	—	—	1.0
	260R302	3000:5	0.3	0.3	—	—	—	1.0
	260R402	4000:5	0.3	0.3	—	—	—	1.0
3-3/4 x 7-7/16	560R401	400:5	1.2	1.2	2.4	—	—	1.33
	560R501	500:5	0.6	1.2	2.4	—	—	1.33
	560R601	600:5	0.6	0.6	1.2	2.4	2.4	1.33
	560R751	750:5	0.6	0.6	1.2	1.2	2.4	1.33
	560R801	800:5	0.6	0.6	1.2	1.2	2.4	1.33
	560R102	1000:5	0.3	0.3	0.6	1.2	1.2	1.33
	560R122	1200:5	0.3	0.3	0.6	0.6	1.2	1.33
	560R152	1500:5	0.3	0.3	0.3	0.6	0.6	1.33
	560R162	1600:5	0.3	0.3	0.3	0.6	0.6	1.33
	560R202	2000:5	0.3	0.3	0.3	0.6	0.6	1.33
	560R252	2500:5	0.3	0.3	0.3	0.3	0.6	1.33
	560R302	3000:5	0.3	0.3	0.3	0.3	0.6	1.33
	560R322	3200:5	0.3	0.3	0.3	0.3	0.6	1.33
	560R402	4000:5	0.3	0.3	0.3	0.3	0.6	1.33
	560R502	5000:5	0.3	0.3	0.3	0.3	0.6	1.33

Split-Core Current Transformers

Table 6.28: Split-Core Transformers, Model 270R is UR/cUR Recognized, 60 Hz

Window Size (inches)	Catalog Number (without brackets) *[13]*	Current Rating (Amperes)	ANSI Accuracy Classification — 60 Hz Metering Class					Rating Factor 30 °C Ambient
			B-0.1	B-0.2	B-0.5	B-0.9	B-1.8	
3-9/16 x 8-3/16	270R401	400:5	—	—	—	—	—	1.33
	270R501	500:5	—	—	—	—	—	1.33
	270R601	600:5	—	—	—	—	—	1.33
3-9/16 x 8-3/16	270R801	800:5	1.2	2.4	—	—	—	1.33
	270R102	1000:5	1.2	1.2	2.4	—	—	1.33
	270R122	1200:5	1.2	1.2	2.4	—	—	1.33
	270R152	1500:5	1.2	1.2	2.4	—	—	1.33
	270R162	1600:5	1.2	1.2	2.4	—	—	1.33
	270R202	2000:5	1.2	1.2	1.2	2.4	—	1.33
	270R252	2500:5	1.2	1.2	1.2	2.4	—	1.33
	270R302	3000:5	1.2	1.2	1.2	1.2	2.4	1.0
	270R402	4000:5	1.2	1.2	1.2	1.2	1.2	1.0
	270R502	5000:5	1.2	1.2	1.2	1.2	1.2	1.0
3-1/2 x 6-1/4	273201	200:5	—	—	—	—	—	1.33
	273251	250:5	—	—	—	—	—	1.33
	273301	300:5	2.4	—	—	—	—	1.33
	273401	400:5	2.4	—	—	—	—	1.33
	273501	500:5	2.4	—	—	—	—	1.33
	273601	600:5	2.4	2.4	—	—	—	1.33
	273801	800:5	1.2	2.4	—	—	—	1.33
	273102	1000:5	1.2	1.2	2.4	—	—	1.33
	273122	1200:5	1.2	1.2	2.4	—	—	1.33
	273162	1600:5	1.2	1.2	2.4	—	—	1.33
	273202	2000:5	1.2	1.2	1.2	2.4	—	1.33
	273252	2500:5	1.2	1.2	1.2	2.4	—	1.33
	273302	3000:5	1.2	1.2	1.2	1.2	2.4	1.00
	273402	4000:5	1.2	1.2	1.2	1.2	1.2	1.00

[12] For mounting brackets, refer to Bushing Current Transformers 50–400 Hz, page 6-14
[13] For mounting brackets, refer to Bushing Current Transformers 50–400 Hz, page 6-14

© 2017 Schneider Electric
All Rights Reserved

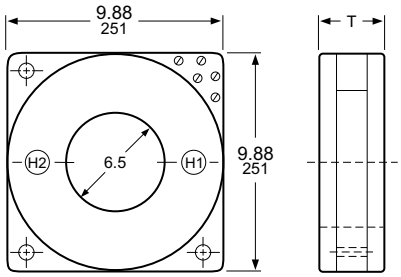

Models 780 R, 781R, 785R, and 786R

Table 6.29: Dimensions for Models 780R, 781R, 785R, and 786R

Model	T (inches)
780R	3.38
781R	3.38
785R	6.75
786R	6.75

Table 6.30: Mounting Brackets

Model	Bracket
2NR	MB1
5NR	MB1
7RL	MB7
54R	Included
64R	MB10
66R	MB12
74R	MB16
76R	MB18
81X	MB81
100R	MB31
110R	MB32
120R	MB31
140R	MB32
151R	MB30
152R	MB30
170R	MB30
180R	MB9
200R	Included
201R	Included
202R	Included
203R	Included
210R	MB32
260R	Not Available
270R	Not Available
273	Not Available

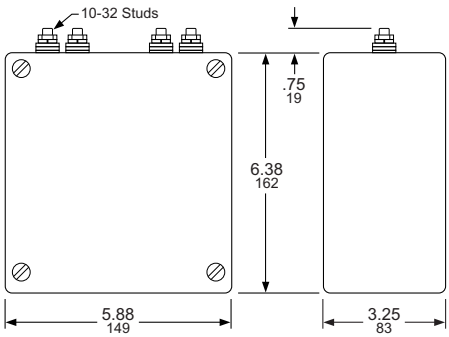

Model 81X

Bushing Current Transformers 50–400 Hz

Table 6.31: Bushing Current Transformers

Window Size (inches)	Catalog Number	Current Rating [14] (Amperes)	Relay Class	ANSI Accuracy Classification—60 Hz Metering Class					Rating Factor 30°C Ambient
				B-0.1	B-0.2	B-0.5	B-0.9	B-1.8	
6-1/2	780R500	50:5	—	—	—	—	—	—	2.0
	780R750	75:5	C10	1.2	2.4	—	—	—	2.0
	780R101	100:5	C10	2.4	2.4	—	—	—	2.0
	780R151	150:5	C20	0.6	1.2	—	—	—	2.0
	780R201	200:5	C20	0.6	1.2	2.4	—	—	2.0
	780R251	250:5	C20	0.6	0.6	1.2	2.4	—	2.0
	780R301	300:5	C50	0.3	0.6	1.2	1.2	2.4	2.0
	780R401	400:5	C50	0.3	0.3	0.6	1.2	1.2	2.0
	780R501	500:5	C50	0.3	0.3	0.6	0.6	1.2	2.0
	780R601	600:5	C100	0.3	0.3	0.3	0.6	0.6	2.0
	780R751	750:5	C100	0.3	0.3	0.3	0.3	0.6	2.0
	780R801	800:5	C100	0.3	0.3	0.3	0.3	0.6	2.0
	780R102	1000:5	C100	0.3	0.3	0.3	0.3	0.3	2.0
	780R122	1200:5	C200	0.3	0.3	0.3	0.3	0.3	2.0
	780R152	1500:5	C200	0.3	0.3	0.3	0.3	0.3	2.0
	780R162	1600:5	C200	0.3	0.3	0.3	0.3	0.3	2.0
	780R202	2000:5	C200	0.3	0.3	0.3	0.3	0.3	2.0
	780R252	2500:5	C200	0.3	0.3	0.3	0.3	0.3	2.0
	780R302	3000:5	C200	0.3	0.3	0.3	0.3	0.3	2.0
	780R402	4000:5	C200	0.3	0.3	0.3	0.3	0.3	1.5
6-1/2	781R601	600:5 MR	C100	0.3	0.3	0.3	0.6	0.6	2.0
	781R122	1200:5 MR	C200	0.3	0.3	0.3	0.3	0.3	2.0
	781R202	2000:5 MR	C200	0.3	0.3	0.3	0.3	0.3	2.0
	781R302	3000:5 MR	C200	0.3	0.3	0.3	0.3	0.3	2.0
	781R402	4000:5 MR	C200	0.3	0.3	0.3	0.3	0.3	1.5
6-1/2	785R500	50:5	C10	2.4	2.4	—	—	—	2.0
	785R750	75:5	C20	1.2	1.2	—	—	—	2.0
	785R101	100:5	C20	1.2	1.2	2.4	—	—	2.0
	785R151	150:5	C50	0.6	0.6	1.2	2.4	_	2.0
	785R201	200:5	C50	0.6	0.6	1.2	2.4	2.4	2.0
	785R251	250:5	C50	0.3	0.6	1.2	1.2	2.4	2.0
	785R301	300:5	C100	0.3	0.3	0.6	0.6	1.2	2.0
	785R401	400:5	C100	0.3	0.3	0.3	0.6	1.2	2.0
	785R501	500:5	C100	0.3	0.3	0.3	0.6	0.6	2.0
	785R601	600:5	C200	0.3	0.3	0.3	0.3	0.6	2.0
	785R751	750:5	C200	0.3	0.3	0.3	0.3	0.3	2.0
	785R801	800:5	C200	0.3	0.3	0.3	0.3	0.3	2.0
	785R102	1000:5	C200	0.3	0.3	0.3	0.3	0.3	2.0
	785R122	1200:5	C400	0.3	0.3	0.3	0.3	0.3	2.0
	785R152	1500:5	C400	0.3	0.3	0.3	0.3	0.3	2.0
	785R162	1600:5	C400	0.3	0.3	0.3	0.3	0.3	2.0
	785R202	2000:5	C400	0.3	0.3	0.3	0.3	0.3	2.0
	785R252	2500:5	C400	0.3	0.3	0.3	0.3	0.3	2.0
	785R302	3000:5	C400	0.3	0.3	0.3	0.3	0.3	2.0
	785R402	4000:5	C400	0.3	0.3	0.3	0.3	0.3	1.5
6-1/2	786R601	600:5 MR	C200	0.3	0.3	0.3	0.3	0.3	2.0
	786R122	1200:5 MR	C400	0.3	0.3	0.3	0.3	0.3	2.0
	786R202	2000:5 MR	C400	0.3	0.3	0.3	0.3	0.3	2.0
	786R302	3000:5 MR	C400	0.3	0.3	0.3	0.3	0.3	2.0
	786R402	4000:5 MR	C400	0.3	0.3	0.3	0.3	0.3	1.5

Auxiliary Current Transformers

Table 6.32: Auxiliary Current Transformers

Catalog Number (without brackets)	Ratio
81X05000100	5:1
81X05000200	5:2
81X05000250	5:2.5
81X05000500	5:5
81X07500500	7.5:5
81X10000500	10:5
81X12500500	12.5:5
81X15000500	15:5

NOTE: Model 81X Accuracy 0.3B0.1, B0.2, B0.5@60 Hz, RF=1.5@30 °C

[14] For multi-ratio (MR) taps, refer to Table 6.24 Multi-Ratio Taps (Models 151R, 312R, 781R, 786R), page 6-12

© 2017 Schneider Electric
All Rights Reserved
2/15/2017

Obsolete—January 1, 2016
Energy Efficient Three-Phase

NOTE: International products—for export use only.

Table 6.33: EE Three Phase; 60HZ; 208Y/120 Secondary; cULus Listed

kVA	Catalog No.	Minimum Efficiency @ 35% 75° C	Full Capacity Taps	Degree C Temp. Rise	Insulation Class	%IZ	Sound Level dB	Weight (lbs)	Enclosure
480 V Delta Primary, Aluminum Windings									
15	EE15T3H	97.0%	6–2.5%2+4–	150	220	5.1%	45	220	17D
30	EE30T3H	97.5%	6–2.5%2+4–	150	220	5.5%	45	260	17D
45	EE45T3H	97.7%	6–2.5%2+4–	150	220	6.0%	45	368	18D
75	EE75T3H	98.0%	6–2.5%2+4–	150	220	3.7%	50	585	20D
112.5	EE112T3H	98.2%	6–2.5%2+4–	150	220	5.2%	50	620	21D
150	EE150T3H	98.3%	6–2.5%2+4–	150	220	6.0%	50	835	22D
225	EE225T3H	98.5%	6–2.5%2+4–	150	220	6.5%	55	1110	24D
300	EE300T3H	98.6%	6–2.5%2+4–	150	220	5.9%	55	1350	25D
500	EE500T68H	98.7%	4–2.5%2+2–	150	220	6.1%	60	1875	30D
750	EE750T68H	98.8%	4–2.5%2+2–	150	220	5.4%	64	2965	31D
1000	EE1000T77H	98.9%	2–5%1+1–	150	220	5.7%	64	5200	33F
600 V Delta Primary, Aluminum Windings									
15	EE15T65H	97.0%	6–2.5%2+4–	150	220	4.5%	45	240	17D
30	EE30T65H	97.5%	6–2.5%2+4–	150	220	5.9%	45	290	17D
45	EE45T65H	97.7%	6–2.5%2+4–	150	220	6.4%	45	372	18D
75	EE75T65H	98.0%	6–2.5%2+4–	150	220	3.6%	50	585	20D
112.5	EE112T65H	98.2%	6–2.5%2+4–	150	220	5.0%	50	712	21D
150	EE150T65H	98.3%	6–2.5%2+4–	150	220	3.7%	50	790	22D
225	EE225T65H	98.5%	6–2.5%2+4–	150	220	5.1%	55	945	24D
300	EE300T65H	98.6%	6–2.5%2+4–	150	220	5.6%	55	1305	25D
500	EE500T79H	98.7%	4–2.5%2+2–	150	220	6.0%	60	1870	30D
750	EE750T79H	98.8%	4–2.5%2+2–	150	220	5.4%	64	2990	31D
1000	EE1000T79H	98.9%	4–2.5%2+2–	150	220	—	64	5800	33F
208 V Delta Primary, Aluminum Windings									
15	EE15T211H	97.0%	3–5%1+2–	150	220	5.1%	45	210	17D
30	EE30T211H	97.5%	3–5%1+2–	150	220	6.1%	45	210	17D
45	EE45T211H	97.7%	3–5%1+2–	150	220	5.7%	45	374	18D
75	EE75T211H	98.0%	3–5%1+2–	150	220	3.8%	50	575	20D
112.5	EE112T211H	98.2%	3–5%1+2–	150	220	5.3%	50	604	21D
150	EE150T211H	98.3%	3–5%1+2–	150	220	3.6%	50	795	22D
225	EE225T211H	98.5%	3–5%1+2–	150	220	4.9%	55	1000	24D
300	EE300T211H	98.6%	3–5%1+2–	150	220	5.2%	55	1425	25D
500	EE500T211H	98.7%	3–5%1+2–	150	220	6.2%	60	1870	30D
240 V Delta Primary, Aluminum Windings									
15	EE15T67H	97.0%	6–2.5%2+4–	150	220	4.1%	45	240	17D
30	EE30T67H	97.5%	6–2.5%2+4–	150	220	6.2%	45	260	17D
45	EE45T67H	97.7%	6–2.5%2+4–	150	220	5.7%	45	379	18D
75	EE75T67H	98.0%	6–2.5%2+4–	150	220	4.2%	50	590	20D
112.5	EE112T67H	98.2%	6–2.5%2+4–	150	220	6.0%	50	620	21D
150	EE150T67H	98.3%	6–2.5%2+4–	150	220	3.3%	50	805	22D
225	EE225T67H	98.5%	6–2.5%2+4–	150	220	5.2%	55	972	24D
300	EE300T239H	98.6%	3–5%1+2–	150	220	5.4%	55	1360	25D
500	EE500T239H	98.7%	3–5%1+2–	150	220	6.3%	60	1900	25D
480 V Delta Primary, Copper Windings									
15	EE15T3HCU	97.0%	6–2.5%2+4–	150	220	4.6%	45	310	17D
30	EE30T3HCU	97.5%	6–2.5%2+4–	150	220	4.6%	45	340	17D
45	EE45T3HCU	97.7%	6–2.5%2+4–	150	220	4.4%	45	418	18D
75	EE75T3HCU	98.0%	6–2.5%2+4–	150	220	3.5%	50	642	20D
112.5	EE112T3HCU	98.2%	6–2.5%2+4–	150	220	3.9%	50	725	21D
150	EE150T3HCU	98.3%	6–2.5%2+4–	150	220	4.7%	50	915	22D
225	EE225T3HCU	98.5%	6–2.5%2+4–	150	220	3.8%	55	1125	24D
300	EE300T3HCU	98.6%	6–2.5%2+4–	150	220	4.8%	55	1535	25D
500	EE500T68HCU	98.7%	4–2.5%2+2–	150	220	4.1%	60	2350	30D
750	EE750T68HCU	98.8%	4–2.5%2+2–	150	220	4.7%	—	3485	31D

Table 6.34: EE Three Phase; 60HZ; 480Y/277 Secondary; cULus Listed

kVA	Catalog No.	Minimum Efficiency @ 35% 75° C	Full Capacity Taps	Degree C Temp. Rise	Insulation Class	%IZ	Sound Level dB	Weight (lbs)	Enclosure	H	W	D
208 V Delta Primary, Aluminum Windings												
15	EE15T212H	97.0%	3–5%1+2–	150	220	4.2%	45	220	17D	27.00 / 686	20.00 / 508	16.00 / 406
30	EE30T212H	97.5%	3–5%1+2–	150	220	6.5%	45	260	17D	27.00 / 686	20.00 / 508	16.00 / 406
45	EE45T212H	97.7%	3–5%1+2–	150	220	6.0%	45	368	18D	30.00 / 762	20.00 / 508	20.00 / 508
75	EE75T212H	98.0%	3–5%1+2–	150	220	6.9%	50	585	20D	37.00 / 940	30.00 / 762	20.00 / 508
112.5	EE112T212H	98.2%	3–5%1+2–	150	220	5.4%	50	620	21D	37.00 / 940	30.00 / 762	24.00 / 610
150	EE150T212H	98.3%	3–5%1+2–	150	220	6.4%	50	835	22D	43.75 / 1111	32.00 / 813	27.00 / 686
225	EE225T212H	98.5%	3–5%1+2–	150	220	4.7%	55	1110	24D	49.5 / 1257	35 / 889	28.5 / 724
300	EE300T212H	98.6%	3–5%1+2–	150	220	5.1%	55	1350	25D	49.5 / 1257	41 / 1041	32 / 813
500	EE500T212H	98.7%	3–5%1+2–	150	220	6.5%	60	1875	30D	71 / 1803	48 / 1219	36 / 914
480 V Delta Primary, Aluminum Windings												
15	EE15T1814H	97.0%	6–2.5%2+4–	150	220	4.8%	45	240	17D	27.00 / 686	20.00 / 508	16.00 / 406
30	EE30T1814H	97.5%	6–2.5%2+4–	150	220	4.7%	45	290	17D	27.00 / 686	20.00 / 508	16.00 / 406
45	EE45T1814H	97.7%	6–2.5%2+4–	150	220	5.7%	45	372	18D	30.00 / 762	20.00 / 508	20.00 / 508
75	EE75T1814H	98.0%	6–2.5%2+4–	150	220	4.5%	50	585	20D	37.00 / 940	30.00 / 762	20.00 / 508
112.5	EE112T1814H	98.2%	6–2.5%2+4–	150	220	5.1%	50	712	21D	37.00 / 940	30.00 / 762	24.00 / 610
150	EE150T1814H	98.3%	6–2.5%2+4–	150	220	3.3%	50	790	22D	43.75 / 1111	32.00 / 813	27.00 / 686
225	EE225T1814H	98.5%	6–2.5%2+4–	150	220	4.0%	55	945	24D	49.5 / 1257	35 / 889	28.5 / 724
300	EE300T1814H	98.6%	6–2.5%2+4–	150	220	4.9%	55	1305	25D	49.5 / 1257	41 / 1041	32 / 813
500	EE500T76H	98.7%	4–2.5%2+2–	150	220	5.8%	60	1870	30D	71 / 1803	48 / 1219	36 / 914

© 2017 Schneider Electric
All Rights Reserved

Obsolete—January 1, 2016

Table 6.35: EE Three Phase; 60HZ; 240 Delta Secondary; cULus Listed

kVA	Catalog No.	Minimum Efficiency @ 35% 75° C	Full Capacity Taps	Degree C Temp. Rise	Insulation Class	%IZ	Sound Level dB	Weight (lbs)	Enclosure
480 V Delta Primary, Aluminum Windings									
15	EE15T6H	97.0%	6–2.5%2+4–	150	220	4.1%	45	220	17D
30	EE30T6H	97.5%	6–2.5%2+4–	150	220	5.6%	45	260	17D
45	EE45T6H	97.7%	6–2.5%2+4–	150	220	6.1%	45	368	18D
75	EE75T6H	98.0%	6–2.5%2+4–	150	220	3.9%	50	585	20D
112.5	EE112T6H	98.2%	6–2.5%2+4–	150	220	5.4%	50	620	21D
150	EE150T6H	98.3%	6–2.5%2+4–	150	220	3.9%	50	835	22D
225	EE225T6H	98.5%	6–2.5%2+4–	150	220	4.4%	55	1110	24D
300	EE300T6H	98.6%	6–2.5%2+4–	150	220	5.3%	55	1350	25D
500	EE500T63H	98.7%	4–2.5%2+2–	150	220	5.7%	60	1875	30D
750	EE750T63H	98.8%	4–2.5%2+2–	150	220	5.2%	64	2965	31D
1000	EE1000T78H	98.9%	2–5%1+1–	150	220	5.3%	64	5200	33F
480 V Delta Primary, Aluminum Windings									
240 Delta with 120 center taps have historically been limited to 5% capacity on the center tap. The new units from Schneider Electricoffer greater limits on 120 V center tap. Limits are determined by the totaltransformer loading and the following formula used to size new 120 V center tap units:(240 V balanced loads) + 2.5 x (120 V loads)= kVA required									
15	EE15T151HCT	97.0%	2–5%–	150	220	5.3%	45	220	17D
30	EE30T151HCT	97.5%	2–5%–	150	220	5.6%	45	295	17D
45	EE45T151HCT	97.7%	2–5%–	150	220	5.7%	45	385	18D
75	EE75T151HCT	98.0%	2–5%–	150	220	4.7%	50	590	19D
112.5	EE112T151HCT	98.2%	2–5%–	150	220	4.3%	50	635	21D
150	EE150T151HCT	98.3%	2–5%–	150	220	3.1%	50	783	22D
225	EE225T151HCT	98.5%	2–5%–	150	220	3.8%	55	1080	24D
300	EE300T151HCT	98.6%	2–5%–	150	220	4.6%	55	1355	25D
500	EE500T151HCT	98.7%	2–5%–	150	220	5.1%	60	2137	30D
750	EE750T151HCT	98.8%	2–5%–	150	220	5.6%	64	2982	31D
1000	EE1000T151HCT	98.9%	2–5%–	150	220	—	64	5800	33F

Obsolete—January 1, 2016
EE Watchdog Transformers

NOTE: International products—for export use only.

Table 6.36: EE Three Phase Watchdog Transformers: 60HZ, cULus Listed

kVA	Catalog No.	Minimum Efficiency @ 35% 75° C	Full Capacity Taps	Degree C Temp. Rise	Insulation Class	%IZ	Sound Level dB	Weight (lbs)	Enclosure
480 V Delta Primary, 208Y/120 Secondary, Aluminum Windings									
15	EE15T3HF	97.0%	6–2.5%2+4–	115	220	5.3%	45	220	17D
30	EE30T3HF	97.5%	6–2.5%2+4–	115	220	5.3%	45	368	18D
45	EE45T3HF	97.7%	6–2.5%2+4–	115	220	5.2%	45	585	20D
75	EE75T3HF	98.0%	6–2.5%2+4–	115	220	6.3%	50	620	21D
112.5	EE112T3HF	98.2%	6–2.5%2+4–	115	220	5.3%	50	835	22D
150	EE150T3HF	98.3%	6–2.5%2+4–	115	220	5.1%	50	980	24D
225	EE225T3HF	98.5%	6–2.5%2+4–	115	220	6.0%	55	1349	25D
300	EE300T68HF	98.6%	4–2.5%2+2–	115	220	3.7%	55	2050	30D
500	EE500T68HF	98.7%	4–2.5%2+2–	115	220	6.6%	60	2330	30D
480 V Delta Primary, 208Y/120 Secondary, Copper Windings									
15	EE15T3HFCU	97.0%	6–2.5%2+4–	115	220	5.0%	45	260	17D
30	EE30T3HFCU	97.5%	6–2.5%2+4–	115	220	2.8%	45	420	18D
45	EE45T3HFCU	97.7%	6–2.5%2+4–	115	220	2.0%	45	642	20D
75	EE75T3HFCU	98.0%	6–2.5%2+4–	115	220	3.4%	50	675	21D
112.5	EE112T3HFCU	98.2%	6–2.5%2+4–	115	220	3.7%	50	471	22D
150	EE150T3HFCU	98.3%	6–2.5%2+4–	115	220	2.5%	50	1050	24D
225	EE225T3HFCU	98.5%	6–2.5%2+4–	115	220	3.8%	55	1220	25D
300	EE300T68HFCU	98.6%	4–2.5%2+2–	115	220	4.8%	55	2300	30D
500	EE500T68HFCU	98.7%	4–2.5%2+2–	115	220	4.1%	60	2409	30D
480 V Delta Primary, 208Y/120 Secondary, Aluminum Windings									
15	EE15T3HB	97.0%	6–2.5%2+4–	80	220	5.1%	45	220	17D
30	EE30T3HB	97.5%	6–2.5%2+4–	80	220	3.7%	45	368	18D
45	EE45T3HB	97.7%	6–2.5%2+4–	80	220	2.1%	45	585	20D
75	EE75T3HB	98.0%	6–2.5%2+4–	80	220	3.3%	50	620	21D
112.5	EE112T3HB	98.2%	6–2.5%2+4–	80	220	3.7%	50	835	22D
150	EE150T3HB	98.3%	6–2.5%2+4–	80	220	3.1%	50	980	24D
225	EE225T3HB	98.5%	6–2.5%2+4–	80	220	4.2%	55	1349	25D
300	EE300T68HB	98.6%	4–2.5%2+2–	80	220	4.8%	55	2400	30D
500	EE500T68HB	98.7%	4–2.5%2+2–	80	220	3.6%	60	2964	30D
480 V Delta Primary, 208Y/120 Secondary, Copper Windings									
15	EE15T3HBCU	97.0%	6–2.5%2+4–	80	220	4.7%	45	260	17D
30	EE30T3HBCU	97.5%	6–2.5%2+4–	80	220	2.7%	45	418	18D
45	EE45T3HBCU	97.7%	6–2.5%2+4–	80	220	1.8%	45	642	20D
75	EE75T3HBCU	98.0%	6–2.5%2+4–	80	220	2.5%	50	725	21D
112.5	EE112T3HBCU	98.2%	6–2.5%2+4–	80	220	2.2%	50	910	22D
150	EE150T3HBCU	98.3%	6–2.5%2+4–	80	220	2.3%	50	1125	24D
225	EE225T3HBCU	98.5%	6–2.5%2+4–	80	220	3.6%	55	1425	25D
300	EE300T68HBCU	98.6%	4–2.5%2+2–	80	220	4.3%	55	2400	30D
500	EE500T68HBCU	98.7%	4–2.5%2+2–	80	220	5.0%	60	2578	30D

© 2017 Schneider Electric
All Rights Reserved
2/15/2017

Obsolete—January 1, 2016
EE NL and NLP Series Transformers

- International products—for export use only.
- Three-phase dry type transformers, 480 Delta to 208Y/120
- Aluminum or copper windings
- Electrostatic shield
- Class 220 insulation
- Double size neutral terminal for additional customer neutral cables
- Additional coil capacity to compensate for higher non-linear load loss
- cULus Listed

Table 6.37: EE Three Phase; 60HZ; 480 V Delta Primary, 208Y/120 Secondary; cULus Listed

kVA	Catalog No.	Minimum Efficiency @ 35% 75° C	Full Capacity Taps	Degree C Temp. Rise	Insulation Class	%IZ	Sound Level dB	Weight (lbs)	Enclosure
NL Series for Typical Non-Linear Load Services, K-4 Rated, Aluminum Windings									
15	EE15T3HFISNL	97.0%	6–2.5%2+4–	115	220	4.0%	45	256	17D
30	EE30T3HFISNL	97.5%	6–2.5%2+4–	115	220	4.6%	45	320	18D
45	EE45T3HFISNL	97.7%	6–2.5%2+4–	115	220	3.3%	45	515	20D
75	EE75T3HFISNL	98.0%	6–2.5%2+4–	115	220	4.4%	50	535	21D
112.5	EE112T3HFISNL	98.2%	6–2.5%2+4–	115	220	5.2%	50	800	22D
150	EE150T3HFISNL	98.3%	6–2.5%2+4–	115	220	3.4%	50	1110	24D
225	EE225T3HFISNL	98.5%	6–2.5%2+4–	115	220	4.4%	55	1349	25D
300	EE300T68HFISNL	98.6%	6–2.5%2+4–	115	220	4.8%	55	1750	30D
500	EE500T68HFISNL	98.7%	4–2.5%2+2–	115	220	4.2%	60	2295	31D
NL Series for Typical Non-Linear Load Services, K-4 Rated, Copper Windings									
15	EE15T3HFISCUNL	97.0%	6–2.5%2+4–	115	220	4.7%	45	260	17D
30	EE30T3HFISCUNL	97.5%	6–2.5%2+4–	115	220	3.4%	45	395	18D
45	EE45T3HFISCUNL	97.7%	6–2.5%2+4–	115	220	5.2%	45	730	20D
75	EE75T3HFISCUNL	98.0%	6–2.5%2+4–	115	220	6.5%	50	640	20D
112.5	EE112T3HFISCUNL	98.2%	6–2.5%2+4–	115	220	3.8%	50	935	22D
150	EE150T3HFISCUNL	98.3%	6–2.5%2+4–	115	220	4.6%	50	1300	24D
225	EE225T3HFISCUNL	98.5%	6–2.5%2+4–	115	220	3.6%	55	1450	24D
300	EE300T68HFISCUNL	98.6%	6–2.5%2+4–	115	220	4.7%	55	2450	25D
500	EE500T68HFISCUNL	98.7%	4–2.5%2+2–	115	220	5.0%	60		31D
NLP Series for Typical Non-Linear Load Services, K-13 Rated, Aluminum Windings									
15	EE15T3HFISNLP	97.0%	6–2.5%2+4–	115	220	4.0%	45	256	17D
30	EE30T3HFISNLP	97.5%	6–2.5%2+4–	115	220	4.6%	45	375	18D
45	EE45T3HFISNLP	97.7%	6–2.5%2+4–	115	220	3.3%	45	500	20D
75	EE75T3HFISNLP	98.0%	6–2.5%2+4–	115	220	3.3%	50	560	21D
112.5	EE112T3HFISNLP	98.2%	6–2.5%2+4–	115	220	4.7%	50	800	22D
150	EE150T3HFISNLP	98.3%	6–2.5%2+4–	115	220	3.4%	50	1110	24D
225	EE225T3HFISNLP	98.5%	6–2.5%2+4–	115	220	4.4%	55	1335	25D
300	EE300T68HFISNLP	98.6%	6–2.5%2+4–	115	220	4.4%	55	2350	30D
500	EE500T68HFISNLP	98.7%	4–2.5%2+2–	115	220	5.0%	60	3200	31D
NLP Series for Typical Non-Linear Load Services, K-13 Rated, Copper Windings									
15	EE15T3HFISCUNLP	97.0%	6–2.5%2+4–	115	220	3.8%	45	260	17D
30	EE30T3HFISCUNLP	97.5%	6–2.5%2+4–	115	220	3.4%	45	430	18D
45	EE45T3HFISCUNLP	97.7%	6–2.5%2+4–	115	220	4.5%	45	730	20D
75	EE75T3HFISCUNLP	98.0%	6–2.5%2+4–	115	220	6.5%	50	640	20D
112.5	EE112T3HFISCUNLP	98.2%	6–2.5%2+4–	115	220	3.7%	50	985	22D
150	EE150T3HFISCUNLP	98.3%	6–2.5%2+4–	115	220	4.4%	50	1135	24D
225	EE225T3HFISCUNLP	98.5%	6–2.5%2+4–	115	220	3.6%	55	1477	24D
300	EE300T68HFISCUNLP	98.6%	6–2.5%2+4–	115	220	3.5%	55	2650	30D
500	EE500T68HFISCUNLP	98.7%	4–2.5%2+2–	115	220	5.5%	60	—	31D

© 2017 Schneider Electric
All Rights Reserved

Obsolete—January 1, 2016

NOTE: International products—for export use only.

Table 6.38: Harmonic Mitigating, 480 Primary to 208zz/120 Secondary—UL Listed

kVA	Catalog No.	Minimum Efficiency @ 35% 75° C	Full Capacity Taps	Degree C Temp. Rise	Insulation Class	%IZ	Sound Level dB	Weight (lbs)	Enclosure
480 V Delta Primary to 208/120 V Secondary with a 0° Phase Shift, 130° Rise									
15	HM15T208NCU	97.0%	6–2.5% 2+4–	130	200	4.5%	45	310	17D
30	HM30T208NCU	97.5%	6–2.5% 2+4–	130	200	4.5%	45	340	17D
45	HM45T208NCU	97.7%	6–2.5% 2+4–	130	200	6.8%	45	418	18D
75	HM75T208NCU	98.0%	6–2.5% 2+4–	130	200	4.0%	50	642	20D
112.5	HM112T208NCU	98.2%	6–2.5% 2+4–	130	200	4.4%	50	725	21D
150	HM150T208NCU	98.3%	6–2.5% 2+4–	130	200	3.1%	50	915	22D
225	HM225T208NCU	98.5%	6–2.5% 2+4–	130	200	6.4%	55	1125	24D
300	HM300T208NCU	98.6%	4–2.5% 2+2–	130	200	5.6%	55	1535	25D
480 V Primary to 208/120 V Secondary with a +30° Phase Shift, 130° C Rise									
15	HM15T255NCU	97.0%	3–5% 1+3–	130	200	3.9%	45	310	17D
30	HM30T255NCU	97.5%	3–5% 1+3–	130	200	4.5%	45	340	17D
45	HM45T255NCU	97.7%	3–5% 1+3–	130	200	6.6%	45	418	18D
75	HM75T255NCU	98.0%	3–5% 1+3–	130	200	4.7%	50	642	20D
112.5	HM112T255NCU	98.2%	3–5% 1+3–	130	200	5.2%	50	725	21D
150	HM150T255NCU	98.3%	3–5% 1+3–	130	200	5.2%	50	915	22D
225	HM225T255NCU	98.5%	3–5% 1+3–	130	200	6.4%	55	1125	24D
300	HM300T255NCU	98.6%	3–5% 1+3–	130	200	6.6%	55	1535	25D
480 V Delta Primary to 208/120 V Secondary with a +15° Phase Shift, 130° C Rise									
15	HM15T251NCU	97.0%	6–2.5% 2+4–	130	200	2.7%	45	310	17D
30	HM30T251NCU	97.5%	6–2.5% 2+4–	130	200	2.4%	45	340	17D
45	HM45T251NCU	97.7%	6–2.5% 2+4–	130	200	4.5%	45	418	18D
75	HM75T251NCU	98.0%	6–2.5% 2+4–	130	200	4.1%	50	642	20D
112.5	HM112T251NCU	98.2%	6–2.5% 2+4–	130	200	4.1%	50	725	21D
150	HM150T251NCU	98.3%	6–2.5% 2+4–	130	200	3.2%	50	915	22D
225	HM225T251NCU	98.5%	6–2.5% 2+4–	130	200	5.6%	55	1125	24D
300	HM300T251NCU	98.6%	4–2.5% 2+2–	130	200	4.9%	55	1535	25D
480 V Delta Primary to 208/120 V Secondary with a -15° Phase Shift, 130° C Rise									
15	HM15T259NCU	97.0%	6–2.5% 2+4–	130	200	2.7%	45	310	17D
30	HM30T259NCU	97.5%	6–2.5% 2+4–	130	200	2.4%	45	340	17D
45	HM45T259NCU	97.7%	6–2.5% 2+4–	130	200	4.8%	45	418	18D
75	HM75T259NCU	98.0%	6–2.5% 2+4–	130	200	4.1%	50	642	20D
112.5	HM112T259NCU	98.2%	6–2.5% 2+4–	130	200	4.1%	50	725	21D
150	HM150T259NCU	98.3%	6–2.5% 2+4–	130	200	3.2%	50	915	22D
225	HM225T259NCU	98.5%	6–2.5% 2+4–	130	200	5.6%	55	1125	24D
300	HM300T259NCU	98.6%	4–2.5% 2+2–	130	200	4.9%	55	1535	25D

Additional temperature rises are available; for part numbers, see the Schneider Electric Product Configurator.

© 2017 Schneider Electric
All Rights Reserved
2/15/2017

Section 7

International Load Centers

International Miniature Circuit Breakers 7-2

QO™ Plug-On and Bolt-On Circuit Breakers and Switches 7-2
Plug-On QOXD and Bolt-On QOBXD 7-3

Load Centers 7-4

IEC Certified QO™ Load Centers, Type 1 (Indoor) 7-4

© 2017 Schneider Electric
All Rights Reserved

QO™ Plug-On and Bolt-On Circuit Breakers and Switches

General Description

In 1955 Square D Company introduced the QO™ Plug-on System and revolutionized the way electrical contractors install miniature circuit breakers in the United States. Today as part of Schneider Electric™ we offer the same Plug-on System technology around the world. IEC certified QO products are available for residential, commercial and industrial applications.

Table 7.1: International Miniature Circuit Breaker Description

Circuit Breaker	Description	1Ø Consumer Units	3Ø Distribution Boards
QOXD	Branch circuit breaker	X	X

Characteristics

- Circuit breakers are rated 240 Vac single phase and 415 Vac three phase, 50/60 Hz.
- Circuit breakers are available in 1-, 2- or 3-pole construction.
- Thermal trip elements are factory calibrated to 40°C (IEC 947-2) and 30°C (IEC 898) ambient temperature.
- Trip-free handle ensures tripping even when the circuit breaker is held or locked in the ON position.
- Circuit breakers are in compliance with international standards set by the International Electrotechnical Commission (IEC).
- The CE marking is located on each circuit breaker in accordance with the low voltage directive of the European Union.
- The entire QO circuit breaker family provides the advantage of a plug-on connection. (Bolt-on connections also available)

Accessories

Table 7.2: Accessories

Accessory	Description	Cat. No.	QOXD
Handle Tie	Ties two 1P circuit breakers together	QO1HT	X
Handle Lock-Off (Clamp)	Attaches to 1P circuit breaker handles	QO1LO	X
	Attaches to 1P, 2P, 3P circuit breaker handles	HLO1	X
Handle Padlock Attachment	Attaches to 1P, 2P, 3P circuit breaker handles	QOEPLA	—
	Attaches to 1P circuit breaker handles	QOE1PL	—
	Attaches to 1P circuit breaker escutcheon (fixed)	QO1PA	X
	Attaches to 1P circuit breaker handles (removable)	QOHPL	X
	Attaches to 2P, 3P circuit breaker handles (removable)	QO1HPL	X
	Attaches to 2P circuit breaker handles (removable)	GFI2PA	—

Circuit Breaker Operating Characteristics

Table 7.3: Branch Circuit Breakers

Cat. No. Prefix		Number of Poles	Continuous Ampere Rating	IEC 898 Service Rating I_{cn}		Tripping Characteristics
Plug-on	Bolt-on			240 V	415 V	
QOXD	QOBXD	1, 2, 3	10–32 A	3000	3000	Type D (10–20 I_n)
Cat. No. Prefix		Number of Poles	Continuous Ampere Rating	IEC 947-2 Service Rating I_{cu} (I_{cs})		—
Plug-on	Bolt-on			240 V	415 V	—
QOXD	QOBXD	1, 2, 3	10–32 A	3000 (100%)	3000 (100%)	—
		1	40–63 A	3000 (50%)	—	—
		2, 3	40–100 A	—	3000 (50%)	—

Main Switches

Table 7.4: QO-M Plug-On Main Incomer Switch
240 V Certified to IEC 947-3

Ampere Rating	1P Cat. No.	2P Cat. No.	3P and 4P Cat. No.
100 A	N/A	N/A	N/A
125 A	N/A	N/A	QO3100M
125 A–4P	N/A	N/A	QO4100M

© 2017 Schneider Electric
All Rights Reserved
2/15/2017

Plug-On QOXD and Bolt-On QOBXD

Table 7.5: QOXD Thermal-Magnetic, Plug-On Miniature Circuit Breakers 240/415 V 10–32 A Certified to IEC 898 at 3 kA, 40–100 A Certified to IEC 947-2 at 3 kA

Ampere Rating	1P Cat. No.	2P Cat. No.	3P Cat. No.	Terminal Capacity Range
10 A	QOXD110	QOXD210	QOXD310	2.5–6 mm²
16 A	QOXD116	QOXD216	QOXD316	2.5–6 mm²
20 A	QOXD120	QOXD220	QOXD320	2.5–6 mm²
25 A	QOXD125	QOXD225	QOXD325	2.5–6 mm²
32 A	QOXD132	QOXD232	QOXD332	2.5–6 mm²
40 A	QOXD140	QOXD240	QOXD340	10–25 mm²
45 A	QOXD145	QOXD245	QOXD345	10–25 mm²
50 A	QOXD150	QOXD250	QOXD350	10–25 mm²
63 A	QOXD163	QOXD263	QOXD363	10–25 mm²
80 A	N/A	QOXD280	QOXD380	25–50 mm²
100 A	N/A	QOXD2100	QOXD3100	25–50 mm²

Table 7.6: QOBXD Thermal-Magnetic, Bolt-On Miniature Circuit Breakers 240/415 V 10–32 A Certified to IEC 898 at 3 kA, 40–100 A Certified to IEC 947-2 at 3 kA

Ampere Rating	1P Cat. No.	2P Cat. No.	3P Cat. No.	Terminal Capacity Range
10 A	QOBXD110	QOBXD210	QOBXD310	2.5–6 mm²
16 A	QOBXD116	QOBXD216	QOBXD316	2.5–6 mm²
20 A	QOBXD120	QOBXD220	QOBXD320	2.5–6 mm²
25 A	QOBXD125	QOBXD225	QOBXD325	2.5–6 mm²
32 A	QOBXD132	QOBXD232	QOBXD332	2.5–6 mm²
40 A	QOBXD140	QOBXD240	QOBXD340	10–25 mm²
45 A	QOBXD145	QOBXD245	QOBXD345	1–25 mm²
50 A	QOBXD150	QOBXD250	QOBXD350	10–25 mm²
63 A	QOBXD163	QOBXD263	QOBXD363	10–25 mm²
80 A	N/A	QOBXD280	QOBXD380	25–50 mm²
100 A	N/A	QOBXD2100	QOBXD3100	25–50 mm²

For Accessories, see Table 7.2 Accessories, page 7-2
For short circuit ratings, see Table 7.3 Branch Circuit Breakers, page 7-2

© 2017 Schneider Electric
All Rights Reserved
2/15/2017

IEC Certified QO™ Load Centers, Type 1 (Indoor)

Application Data

Square D™ QO™ Three-Phase Circuit Breaker Load Centers can be certified to IEC 60439-1 and 60439-3. Contact your local Field Sales office for more information. They are designed to meet residential, commercial, and industrial requirements to protect electrical systems and equipment.

Features

- Three phase construction
- 125, 150, 200 and 225 A mains ratings with main lugs or main circuit breaker
- 12-42 circuit indoor version
- Flush or surface mounting
- Straight-in wiring to minimize service cable installation
- Top or bottom feed
- Automatic flush adjustment cover to speed installation
- Covers sold separately
- Products are stocked in USA
- Bus on 12-42 circuit load centers is one piece; bus on 12–42 circuit load centers is a one-piece copper bus.
- Order entry point is Lexington
- For more information, contact your local Field Sales office.

Table 7.7: Load Centers

Mains Rating Ampere	Spaces/ Max. Poles	Type 1	
		Box and Interior Cat. No.	Cover With Door Cat. No. *[1]*
Main Lugs 240/415 Vac 3Ø4W			
125 A	12	QO312L125G	QOC16UF/S
	20	QO320L125G	QOC24UF/S
	24	QO324L125G	QOC24UF/S
200	18	QO318L200G	QOC30UF/S
	30	QO330L200G	QOC30UF/S
225	42	QO342L225G	QOC42UF/S
Main Circuit Breaker 240/415 Vac 3Ø4W			
125	30	QO330MQ125	QOC342MQF/S
150	30	QO330MQ150	QOC342MQF/S
	42	QO342MQ150	QOC342MQF/S
200	30	QO330MQ200	QOC342MQF/S
	42	QO342MQ200	QOC342MQF/S
225	42	QO342MQ225	QOC342MQF/S

[1] F/S at end of catalog number indicates to order F for flush device or S for surface device.

© 2017 Schneider Electric
All Rights Reserved
2/15/2017

Section 8

International Safety Switches

General Duty Safety Switches 8-2

CSA Certified General Duty—Fusible 240 Vac 8-2

Heavy Duty Safety Switches 8-3

CSA Certified Heavy Duty—Fusible 240 Vac 8-3
CSA Certified Heavy Duty—Fusible 600 Vac 8-3
CSA Certified Heavy Duty—Special Applications 8-4

Double-Throw Safety Switches 8-5

CSA Certified Double-Throw 8-5
CSA Certified Switch Accessories 8-6

© 2017 Schneider Electric
All Rights Reserved

CSA Certified General Duty—Fusible 240 Vac

- Switches have factory-installed ground bars.
- For optional accessories, see CSA Certified Switch Accessories, page 8-6.

Table 8.1: General Duty Single-Throw 120/240 Vac (Plug); 240 Vac (Cartridge)

Ampere	Fuse	Type 1	Type 3R	Field Installable Class R Fuse Kits
		Cat. No.	Cat. No.	Cat. No.
2-Pole + S/N (2 Blades and Fuseholders, 1 S/N)—Suitable For Service Entrance Use				
30	Plug	CD211N *[1]*	—	—
30	Cartridge	CD221N *[1]*	—	DRK30
60	—	CD222N	CD222NRB	RFK03H
100	—	CD223N	CD223NRB	RFK10
200	—	CD224N	CD224NRB	HRK1020
400	—	CD225N	CD225NR	DRK40
600	—	CD226N	CD226NR	DRK600
3-Pole + S/N (3 Blades and Fuseholders, 1 S/N)—Suitable For Service Entrance Use				
30	Cartridge	CD321N *[1]*	CD321NRB*[1]*	DRK30
60	—	CD322N	CD322NRB	RFK03H
100	—	CD323N	CD323NRB	RFK10
200	—	CD324N	CD324NRB	HRK1020
400	—	CD325N	CD325NR	DRK40
600	—	CD326N	CD326NR	DRK600

Table 8.2: Light Duty Single-Throw 120 Vac Plug

Ampere	Fuse	Type 1
		Cat. No.
30	Plug	L111N *[2]*

NOTE: For more information on Internation Safety Switches, please see: http://www.schneider-electric.com/products/ca/en/80377-safety-switches/.

[1] Not suitable for use as service entrance equipment.
[2] Not suitable for use as service equipment.

© 2017 Schneider Electric
All Rights Reserved
2/15/2017

CSA Certified Heavy Duty—Fusible 240 Vac

- Switches have factory-installed ground bars.
- Switches 30–200 A Type 4/4X and 3R/12 have viewing windows.
- For optional accessories, see CSA Certified Switch Accessories, page 8-6.

Table 8.3: Single-Throw 240 Vac, 250 Vdc

Ampere	Type 1	Type 3R	Type 4/4X	Type 3R/12
	Cat. No.	Cat. No.	Cat. No.	Cat. No.
2P + S/N (2 Blades and Fuseholders, 1 S/N)—Suitable For Service Entrance Use				
30 A	CH221N	CH221NRB	Use 3P devices listed below.	CH221NAWK
60 A	CH222N	CH222NRB		CH222NAWK
100 A	CH223N	CH223NRB		CH223NAWK
200 A	CH224N	CH224NRB		CH224NAWK
400 A	CH225N	CH225NR		CH225NAWK
600 A	CH226N	CH226NR		CH226NAWK
800 A	H227N *[1]*	H227NR *[1]*	—	H227NAWK *[1]*
1200 A	H228N *[1]*	H228NR *[1]*	—	H228NAWK *[1]*
3P + S/N (3 Blades and Fuseholders, 1 S/N)—Suitable For Service Entrance Use				
30 A	CH321N	CH321NRB	CH321NDS	CH321NAWK
60 A	CH322N	CH322NRB	CH322NDS	CH322NAWK
100 A	CH323N	CH323NRB	CH323NDS	CH323NAWK
200 A	CH324N	CH324NRB	CH324NDS	CH324NAWK
400 A	CH325N	CH325NR	CH325NDS	CH325NAWK
600 A	CH326N	CH326NR	CH326NDS	CH326NAWK
800 A	H327N *[1]*	H327NR *[1]*	—	H327NAWK *[1]*
1200 A	H328N *[1]*	H328NR *[1]*	—	H328NAWK *[1]*

NOTE: For more information on Internation Safety Switches, please see: http://www.schneider-electric.com/products/ca/en/80377-safety-switches/.

CSA Certified Heavy Duty—Fusible 600 Vac

- Switches have factory-installed ground bars.
- Switches 30–200 A Type 4/4X and 3R/12 have viewing windows.
- For optional accessories, see CSA Certified Switch Accessories, page 8-6.

Table 8.4: Single-Throw 600 Vac, 600 Vdc

Ampere	Type 1	Type 3R	Type 4/4X	Type 3R/12
	Cat. No.	Cat. No.	Cat. No.	Cat. No.
3-Pole (3 Blades and Fuseholders)				
30 A	CH361	CH361RB	CH361DS	CH361AWK
60 A	CH362	CH362RB	CH362DS	CH362AWK
100 A	CH363	CH363RB	CH363DS	CH363AWK
200 A	CH364	CH364RB	CH364DS	CH364AWK
400 A	CH365	CH365R	CH365DS	CH365AWK
600 A	CH366	CH366R	CH366DS	CH366AWK
800 A	H367 *[1]*	H367R *[1]*	—	H367AWK *[1]*
1200 A	H368 *[1]*	H368R *[1]*	—	H368AWK *[1]*
3-Pole + S/N (3 Blades and Fuseholders, 1 S/N)—Suitable For Service Entrance Use				
30 A	For 3 pole switches 30 A–1200 A with solid neutral attachment, select switch from 3-Pole table above and add the Solid Neutral Assembly Kit from Table 8.12 Solid Neutral Assembly Kits Not Stocked—Order Only., page 8-6			
60 A				
100 A				
200 A				
400 A				
600 A				
800 A				
1200 A				
4-Pole (4 Blades and Fuseholders)—Not Suitable For Service Entrance Use				
30 A	H461 *[1]*	—	H461DS	H461AWK *[1] [2]*
60 A	H462 *[1]*	—	H462DS	H462AWK *[1] [2]*
100 A	H463 *[1]*	—	H463DS	H463AWK *[1] [2]*
200 A	H464 *[1]*	—	H464DS	H464AWK*[1] [2]*
400 A	CH465	—	—	CH465AWK *[2]*
600 A	CH466	—	—	

NOTE: For more information on Internation Safety Switches, please see: http://www.schneider-electric.com/products/ca/en/80377-safety-switches/.

[1] Dual UL Listed and CSA Certified device.
[2] Type 3R/12 switches are suitable for Type 3R application by removing the drainscrew from bottom endwall.

© 2017 Schneider Electric
All Rights Reserved

CSA Certified Heavy Duty—Special Applications

- Switches have factory-installed ground bars.
- For optional accessories, see CSA Certified Switch Accessories, page 8-6.

Table 8.5: Fiberglass Reinforced Polyester NEMA 4X Enclosures Single-Throw 600 Vac, 600 Vdc

Amperes	Type 4X	Type 7/9
	Cat. No.	Cat. No.
3P Fusible		
30 A	H361DF *[3] [4]*	—
60 A	H362DF *[3] [4]*	—
100 A	H363DF *[3] [4]*	—
200 A	H364DF *[3]*	—
3P Non-Fusible		
30 A	HU361DF *[3] [4]*	—
60 A	HU362DF *[3] [4]*	H60XFA *[3]*
100 A	HU363DF *[3] [4]*	H100XFA *[3]*
200 A	HU364DF *[3]*	—

Table 8.6: Receptacle Switches with Crouse Hinds Receptacles—Single-Throw 600 Vac

Ampere	Stainless Steel Type 4/4X*[5]*	Type 12*[5]*	Use With Plug
	Cat. No.	Cat. No.	Cat. No.
3P Fusible			
30 A	CH361DSWC	CH361AWC	APJ3485
60 A	CH362DSWC	CH362AWC	APJ6485
100 A	CH363DSWC	CH363AWC	APJ10487
3P Non-Fusible			
30 A	CHU361DSWC	CHU361AWC	APJ3485
60 A	CHU362DSWC	CHU362AWC	APJ6485
100 A	CHU363DSWC	CHU363AWC	APJ10487

NOTE: For more information on Internation Safety Switches, please see: http://www.schneider-electric.com/products/ca/en/80377-safety-switches/.

Table 8.7: Single-Throw 600 Vac, 600 Vdc

Ampere	Type 1	Type 3R	Type 4/4X	Type 3R/12
	Cat. No.	Cat. No.	Cat. No.	Cat. No.
3P				
30 A	CHU361	CHU361RB	CHU361DS	CHU361AWK
60 A	CHU362	CHU362RB	CHU362DS	CHU362AWK
100 A	CHU363	CHU363RB	CHU363DS	CHU363AWK
200 A	CHU364	CHU364RB	CHU364DS	CHU364AWK
400 A	CHU365	CHU365RB	CHU365DS	CHU365AWK
600 A	CHU366	CHU366R	CHU366DS	CHU366AWK
800 A	HU367 *[3]*	HU367R*[3]*	—	HU367AWK *[3]*
1200 A	HU368 *[3]*	HU368R *[3]*	—	HU368AWK *[3]*
4P, 600 Vac, 600 Vdc				
30 A	HU461 *[3] [4]*	—	—	HU461AWK *[3] [4]*
60 A	HU462 *[3] [4]*	—	—	HU462AWK *[3] [4]*
100 A	HU463 *[3] [4]*	—	—	HU463AWK *[3] [4]*
200 A	HU464 *[3]*	—	—	HU464AWK
400 A	CHU465	—	—	CHU465AWK
600 A	CHU466	—	—	CHU466AWK
6P, 600 Vac				
30 A	—	—	—	HU661AWK *[3]*
60 A	—	—	—	HU662AWK *[3]*
100 A	—	—	—	HU663AWK *[3]*
200 A	—	—	—	HU664AWK

NOTE: For more information on Internation Safety Switches, please see: http://www.schneider-electric.com/products/ca/en/80377-safety-switches/.

[3] Dual UL Listed and CSA Listed device.
[4] F Series devices.
[5] Supplied with viewing window.

© 2017 Schneider Electric
All Rights Reserved
2/15/2017

CSA Certified Double-Throw

- Switches have factory-installed ground bars.
- For optional accessories, see CSA Certified Switch Accessories, page 8-6.

Table 8.8: Double-Throw

Ampere	Type 1	Type 3R	Type 4/4X	Type 12
	Cat. No.	Cat. No.	Cat. No.	Cat. No.
2P 240 Vac—250 Vdc				
30 A	C92251	—	—	—
60 A	For 2P switch applications, select 3P switch 60–600 A from 3P table below.			
100 A				
200 A				
400 A				
3P 600 Vac—250 Vdc				
30 A	C92351 *[1]*	—	—	—
60 A	For 60–100 A, use US devices.			
100 A				
200 A	C82344 *[2]*	C82344RB *[2]*	C82344DS *[2]*	CH82344 *[2]*
4P 240 Vac				
30 A	C92451 *[1]*	—	—	—
60 A	DTU462 *[3]*	DTU462AWK*[3]*	DTU462DS*[3]*	DTU462AWK*[3]*
100 A	DTU463*[3]*	DTU463AWK*[3]*	DTU463DS*[3]*	DTU463AWK*[3]*

NOTE: For more information on Internation Safety Switches, please see: http://www.schneider-electric.com/products/ca/en/80377-safety-switches/.

[1] 240 Vac Maximum
[2] For isolation only, not Load-Make/Load-Break.
[3] 600 Vac rated.

© 2017 Schneider Electric
All Rights Reserved

CSA Certified Switch Accessories
Optional Accessories

Table 8.9: Electrical Interlock Kits

Ampere	Single-Throw	Double-Throw Type 1 Only
	Cat. No.	Cat. No.
30–100 A	EIK-1 or -2	EIK-1 or -2[4]
200 A-3P	EIK-1 or -2[5]	EK200DTU2
200 A-4P	EIK-1 or -2[5]	EK100DTU2
400 A	EIK4060-1 or -2	EK400DTU2
600 A	EIK4060-1 or -2	—
800 A	EIK4060-1 or -2	—
1200 A	EIK4060-1 or -2	—

Table 8.10: Fuse Puller Kits [6]

Ampere	Cat. No.
30 A	FPK03
60 A	FPK0610
100 A	FPK0610

Table 8.11: Class R Fuse Kits

Voltage	Ampere	Cat. No.
240 Vac	30 A	RFK03L
	60 A	RFK03H
	100 A	RFK10
	200 A	HRK1020
	400 A	HRK4060
	600 A	HRK4060
600 Vac	30 A	RFK03H
	60 A	RFK06H
	100 A	RFK10
	200 A	HRK1020
	400 A	HRK4060
	600 A	HRK4060

Table 8.12: Solid Neutral Assembly Kits [6][7]

Ampere	Single-Throw Type 1, 3R	Single-Throw (Copper) Type 4, 4X	Double-Throw Type 1
	Cat. No.	Cat. No.	Cat. No.
30 A	CSN03	CSN03C	SN0310 [8]
60 A	CSN0610	CSN0610C	SN0310
100 A	CSN0610	CSN0610C	SN0310
200 A	CSN20	CSN20C	225SNA
400 A	CH600SN	CH600SNC	DT400N
600 A	CH600SN	CH600SNC	—
800 A	H800SNE4	—	—
1200 A	H1200SNE4	—	—

Table 8.13: Hubs

Size	Type 3R	Type 4/4X/12	
		Standard Zinc	Chrome Plated Zinc
Inches	Cat. No.	Cat. No.	Cat. No.
0.50	—	H050	H050CP
0.75	B075	H075	H075CP
1.00	B100	H100	H100CP
1.25	B125	H125	H125CP
1.50	B150	H150	H150CP
2.00	B200	H200	H200CP
2.50	B250	H250	—
3.00	B300	H300	—
3.50	B350	H350	—
4.00	B400	H400	—
CAP	BCAP	—	—

NOTE: For more information on Internation Safety Switches, please see: http://www.schneider-electric.com/products/ca/en/80377-safety-switches/.

[4] Not for C92251, C92351, C92451.
[5] E-series uses EK1020-1 or -2. Requires 2.
[6] Not Stocked—Order Only.
[7] Non-fusible 600 V switches do not come with Neutral factory-installed. The solid neutral kit must be ordered separately.
[8] C92251, C92351, C92451 uses DT30SN.

© 2017 Schneider Electric
All Rights Reserved
2/15/2017

Section 9

International Circuit Breakers

Thermal-Magnetic Circuit Breakers 9-2

SF and SL Circuit Breakers, IEC Rated 415/240 Vac Max. 9-2

Electronic Trip Circuit Breakers 9-3

P-frame, 3P, Micrologic™ Electronic-Trip Unit, IEC Rated 9-3
R-frame, 3P, Micrologic™ Electronic-Trip Unit, IEC Rated 9-4
P-frame, 4P, Micrologic™ Electronic-Trip Unit, IEC Rated 9-5
R-frame, 4P, Micrologic™ Electronic-Trip Unit, IEC Rated 9-6

Breaking Capacities 9-7

Circuit Breaker Dimensions 9-8

© 2017 Schneider Electric
All Rights Reserved

SF and SL Individually Mounted Circuit Breakers

- CE marking.
- S-frame circuit breakers are CCC Certified.
- International products—for export use only.
- MCCBs in I-Line™ plug-on construction and a complete line of accessories are available. Contact your local Field Sales office.
- Order entry point is Cedar Rapids, Iowa.

Table 9.1: SFAL, Individually-Mounted, IEC Rated Circuit Breakers, 415/240 Vac Max., 50/60 Hz, 1P, 2P, and 3P

Ampere Rating	Cat. No.		
	1P	2P	3P
SFAL *[1]*			
16 A	SFAL1016	SFAL2016	SFAL3016
20 A	SFAL1020	SFAL2020	SFAL3020
32 A	SFAL1032	SFAL2032	SFAL3032
40 A	SFAL1040	SFAL2040	SFAL3040
50 A	SFAL1050	SFAL2050	SFAL3050
63 A	SFAL1063	SFAL2063	SFAL3063
80 A	SFAL1080	SFAL2080	SFAL3080
100 A	SFAL1100	SFAL2100	SFAL3100
125 A	—	SFAL2125	SFAL3125
160 A	—	SFAL2160	SFAL3160

Table 9.2: SLAL Individually-Mounted, IEC Rated Circuit Breakers, 415/240 Vac Max., 50/60 Hz, 2P and 3P

Frame Size	Circuit Breaker Type	Ampere Rating	Cat. No.	
			2P	3P
400 A	SLAL *[1]*	250 A	SLAL2250	SLAL3250
		300 A	SLAL2300	SLAL3300
		350 A	SLAL2350	SLAL3350
		400 A	SLAL2400	SLAL3400

[1] Add suffix K for CCC label

© 2017 Schneider Electric
All Rights Reserved
2/15/2017

P-frame, 3P, Micrologic Electronic-Trip Unit, IEC Rated

Table 9.3: P-frame—1600 A, Individually-Mounted, Micrologic Electronic Trip Unit, IEC Rated

Sensor Rating	Cat. No.			Terminal Wire Range (AWG–kcmil)
	N Interrupting *[1]*	H Interrupting *[1]*	L Interrupting *[1]*	
3P, 690 Vac 50/60 Hz with LS0 Trip Functions				
630 A	NPNLE36063U32R	NPHLE36063U32R	NPLLE34063U32R	(4) 3/0–500 Al/Cu
800 A	NPNLE36080U32R	NPHLE36080U32R	NPLLE34080U32R	
1000 A	NPNLE36100U32R	NPHLE36100U32R	NPLLE34100U32R	
1250 A	NPNLE36125U32R	NPHLE36125U32R	—	
1600 A	NPNLE36160U32R	NPHLE36160U32R	—	
3P, 690 Vac 50/60 Hz with LSI Trip Functions				
630 A	NPNLE36063U33R	NPHLE36063U33R	NPLLE34063U33R	(4) 3/0–500 Al/Cu
800 A	NPNLE36080U33R	NPHLE36080U33R	NPLLE34080U33R	
1000 A	NPNLE36100U33R	NPHLE36100U33R	NPLLE34100U33R	
1250A	NPNLE36125U33R	NPHLE36125U33R	—	
1600A	NPNLE36160U33R	NPHLE36160U33R	—	
Micrologic Ammeter Trip Unit				
3P, 690 Vac 50/60 Hz with LS0 Trip Functions				
630 A	NPNLE36063U42R	NPHLE36063U42R	NPLLE34063U42R	(4) 3/0–500 Al/Cu
800 A	NPNLE36080U42R	NPHLE36080U42R	NPLLE34080U42R	
1000 A	NPNLE36100U42R	NPHLE36100U42R	NPLLE34100U42R	
1250 A	NPNLE36125U42R	NPHLE36125U42R	—	
1600 A	NPNLE36160U42R	NPHLE36160U42R	—	
3P, 690 Vac 50/60 Hz with LSI Trip Functions				
630 A	NPNLE36063U43R	NPHLE36063U43R	NPLLE34063U43R	(4) 3/0–500 Al/Cu
800 A	NPNLE36080U43R	NPHLE36080U43R	NPLLE34080U43R	
1000 A	NPNLE36100U43R	NPHLE36100U43R	NPLLE34100U43R	
1250 A	NPNLE36125U43R	NPHLE36125U43R	—	
1600 A	NPNLE36160U43R	NPHLE36160U43R	—	
3P, 690 Vac 50/60 Hz with LSIG Trip Functions				
630 A	NPNLE36063U44R	NPHLE36063U44R	NPLLE34063U44R	(4) 3/0–500 Al/Cu
800 A	NPNLE36080U44R	NPHLE36080U44R	NPLLE34080U44R	
1000 A	NPNLE36100U44R	NPHLE36100U44R	NPLLE34100U44R	
1250 A	NPNLE36125U44R	NPHLE36125U44R	—	
1600 A	NPNLE36160U44R	NPHLE36160U44R	—	
Micrologic Power Trip Unit				
3P, 690 Vac 50/60 Hz with LSI Trip Functions				
630 A	NPNLE36063U63RE1	NPHLE36063U63RE1	NPLLE34063U63RE1	(4) 3/0–500 Al/Cu
800 A	NPNLE36080U63RE1	NPHLE36080U63RE1	NPLLE34080U63RE1	
1000 A	NPNLE36100U63RE1	NPHLE36100U63RE1	NPLLE34100U63RE1	
1250 A	NPNLE36125U63RE1	NPHLE36125U63RE1	—	
1600 A	NPNLE36160U63RE1	NPHLE36160U63RE1	—	
3P, 690 Vac 50/60 Hz with LSIG Trip Functions				
630 A	NPNLE36063U64RE1	NPHLE36063U64RE1	NPLLE34063U64RE1	(4) 3/0–500 Al/Cu
800 A	NPNLE36080U64RE1	NPHLE36080U64RE1	NPLLE34080U64RE1	
1000 A	NPNLE36100U64RE1	NPHLE36100U64RE1	NPLLE34100U64RE1	
1250 A	NPNLE36125U64RE1	NPHLE36125U64RE1	—	
1600 A	NPNLE36160U64RE1	NPHLE36160U64RE1	—	

NOTE: See Digest for accessories and other information.

Table 9.4: Interrupting Ratings

	N		H		L	
	Icu	Ics (%Icu)	Icu	Ics (%Icu)	Icu	Ics (%Icu)
220/240 V	50 kA	75%	70 kA	50%	150 kA	100%
380/415 V	50 kA		70 kA		150 kA	
440 V	50 kA		65 kA		130 kA	
500/525 V	40 kA		50 kA		100 kA	
660/690 V	30 kA		42 kA		25 kA	

[1] New for P frame IEC only.

© 2017 Schneider Electric
All Rights Reserved

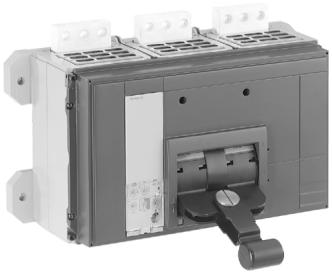

R-frame, 3P, Micrologic Electronic-Trip Unit, IEC Rated

Table 9.5: R-frame—3200 A, Individually-Mounted, Micrologic Electronic Trip Unit, IEC Rated

Sensor Rating	Cat. No.	
	N Interrupting	H Interrupting
3P, 690 Vac 50/60 Hz with LS0 Trip Functions		
1600 A	RNFE36160U32R	RHFE34160U32R
2000 A	RNFE36200U32R	RHFE34200U32R
2500 A	RNFE36250U32R	RHFE34250U32R
3200 A	RNFE36320U32R	RHFE34320U32R
3P, 690 Vac 50/60 Hz with LSI Trip Functions		
1600 A	RNFE36160U33R	RHFE34160U33R
2000 A	RNFE36200U33R	RHFE34200U33R
2500 A	RNFE36250U33R	RHFE34250U33R
3200 A	RNFE36320U33R	RHFE34320U33R
Micrologic Ammeter Trip Unit		
3P, 690 Vac 50/60 Hz with LS0 Trip Functions		
1600 A	RNFE36160U42R	RHFE34160U42R
2000 A	RNFE36200U42R	RHFE34200U42R
2500 A	RNFE36250U42R	RHFE34250U42R
3200 A	RNFE36320U42R	RHFE34320U42R
3P, 690 Vac 50/60 Hz with LSI Trip Functions		
1600 A	RNFE36160U43R	RHFE34160U43R
2000 A	RNFE36200U43R	RHFE34300U43R
2500 A	RNFE36250U43R	RHFE34350U43R
3200 A	RNFE36320U43R	RHFE34320U43R
3P, 690 Vac 50/60 Hz with LSIG Trip Functions		
1600 A	RNFE36160U44R	RHFE34160U44R
2000 A	RNFE36200U44R	RHFE34200U44R
2500 A	RNFE36250U44R	RHFE34250U44R
3200 A	RNFE36320U44R	RHFE34320U44R
Micrologic Power Trip Unit		
3P, 690 Vac 50/60 Hz with LSI Trip Functions		
1600 A	RNFE36160U63RE1	RHFE34160U63RE1
2000 A	RNFE36200U63RE1	RHFE34200U63RE1
2500 A	RNFE36250U63RE1	RHFE34250U63RE1
3200 A	RNFE36320U63RE1	RHFE34320U63RE1
3P, 690 Vac 50/60 Hz with LSIG Trip Functions		
1600 A	RNFE36160U64RE1	RHFE34160U64RE1
2000 A	RNFE36200U64RE1	RHFE34200U64RE1
2500 A	RNFE36250U64RE1	RHFE34250U64RE1
3200 A	RNFE36320U64RE1	RHFE34320U64RE1

NOTE: See Digest for accessories and other information.

Table 9.6: Interrupting Ratings

	N		H	
	Icu	Ics	Icu	Ics (%Icu)
220/240 V	85 kA	75%	125 kA	75%
380/415 V	70 kA		85 kA	
440 V	65 kA	100%	85 kA	
500/525 V	65 kA		—	
660/690 V	65 kA		—	

© 2017 Schneider Electric
All Rights Reserved
2/15/2017

P-frame, 4P, Micrologic Electronic-Trip Unit, IEC Rated

Table 9.7: P-frame—1600 A, Individually-Mounted, Micrologic Electronic Trip Unit, IEC Rated

Sensor Rating	Cat. No.			Terminal Wire Range (AWG–kcmil)
	N Interrupting *[2]*	H Interrupting *[2]*	L Interrupting *[2]*	
4P, 690 Vac 50/60 Hz with LS0 Trip Functions				
630 A	NPNLE46063U32R	NPHLE46063U32R	NPLLE44063U32R	(4) 3/0–500 Al/Cu
800 A	NPNLE46080U32R	NPHLE46080U32R	NPLLE44080U32R	
1000 A	NPNLE46100U32R	NPHLE46100U32R	NPLLE44100U32R	
1250 A	NPNLE46125U32R	NPHLE46125U32R	—	
1600 A	NPNLE46160U32R	NPHLE46160U32R	—	
4P, 690 Vac 50/60 Hz with LSI Trip Functions				
630 A	NPNLE46063U33R	NPHLE46063U33R	NPLLE44063U33R	(4) 3/0–500 Al/Cu
800 A	NPNLE46080U33R	NPHLE46080U33R	NPLLE44080U33R	
1000 A	NPNLE46100U33R	NPHLE46100U33R	NPLLE44100U33R	
1250 A	NPNLE46125U33R	NPHLE46125U33R	—	
1600 A	NPNLE46160U33R	NPHLE46160U33R	—	
Micrologic Ammeter Trip Unit				
4P, 690 Vac 50/60 Hz with LS0 Trip Functions				
630 A	NPNLE46063U42R	NPHLE46063U42R	NPLLE44063U42R	(4) 3/0–500 Al/Cu
800 A	NPNLE46080U42R	NPHLE46080U42R	NPLLE44080U42R	
1000 A	NPNLE46100U42R	NPHLE46100U42R	NPLLE44100U42R	
1250 A	NPNLE46125U42R	NPHLE46125U42R	—	
1600 A	NPNLE46160U42R	NPHLE46160U42R	—	
4P, 690 Vac 50/60 Hz with LSI Trip Functions				
630 A	NPNLE46063U43R	NPHLE46063U43R	NPLLE44063U43R	(4) 3/0–500 Al/Cu
800 A	NPNLE46080U43R	NPHLE46080U43R	NPLLE44080U43R	
1000 A	NPNLE46100U43R	NPHLE46100U43R	NPLLE44100U43R	
1250 A	NPNLE46125U43R	NPHLE46125U43R	—	
1600 A	NPNLE46160U43R	NPHLE46160U43R	—	
4P, 690 Vac 50/60 Hz with LSIG Trip Functions				
630 A	NPNLE46063U44R	NPHLE46063U44R	NPLLE44063U44R	(4) 3/0–500 Al/Cu
800 A	NPNLE46080U44R	NPHLE46080U44R	NPLLE44080U44R	
1000 A	NPNLE46100U44R	NPHLE46100U44R	NPLLE44100U44R	
1250 A	NPNLE46125U44R	NPHLE46125U44R	—	
1600 A	NPNLE46160U44R	NPHLE46160U44R	—	
Micrologic Power Trip Unit				
4P, 690 Vac 50/60 Hz with LSI Trip Functions				
630 A	NPNLE46063U63RE1	NPHLE46063U63RE1	NPLLE44063U63RE1	(4) 3/0–500 Al/Cu
800 A	NPNLE46080U63RE1	NPHLE46080U63RE1	NPLLE44080U63RE1	
1000 A	NPNLE46100U63RE1	NPHLE46100U63RE1	NPLLE44100U63RE1	
1250 A	NPNLE46125U63RE1	NPHLE46125U63RE1	—	
1600 A	NPNLE46160U63RE1	NPHLE46160U63RE1	—	
4P, 690 Vac 50/60 Hz with LSIG Trip Functions				
630 A	NPNLE46063U64RE1	NPHLE46063U64RE1	NPLLE44063U64RE1	(4) 3/0–500 Al/Cu
800 A	NPNLE46080U64RE1	NPHLE46080U64RE1	NPLLE44080U64RE1	
1000 A	NPNLE46100U64RE1	NPHLE46100U64RE1	NPLLE44100U64RE1	
1250 A	NPNLE46125U64RE1	NPHLE46125U64RE1	—	
1600 A	NPNLE46160U64RE1	NPHLE46160U64RE1	—	

NOTE: See Digest for accessories and other information.

Table 9.8: Interrupting Ratings

	N		H		L	
	Icu	Ics (%Icu)	Icu	Ics (%Icu)	Icu	Ics (%Icu)
220/240 V	50 kA	75%	70 kA	50%	150 kA	100%
380/415 V	50 kA		70 kA		150 kA	
440 V	50 kA		65 kA		130 kA	
500/525 V	40 kA		50 kA		100 kA	
660/690 V	30 kA		42 kA		25 kA	

[2] New for P frame IEC only.

© 2017 Schneider Electric
All Rights Reserved

R-frame, 4P, Micrologic Electronic-Trip Unit, IEC Rated

Table 9.9: R-frame—3200 A, Individually-Mounted, Micrologic Electronic Trip Unit, IEC Rated

Sensor Rating	Cat. No.	
	N Interrupting	H Interrupting
4P, 690 Vac 50/60 Hz with LS0 Trip Functions		
1600 A	RNFE46160U32R	RHFE44160U32R
2000 A	RNFE46200U32R	RHFE44200U32R
2500 A	RNFE46250U32R	RHFE44250U32R
3200 A	RNFE46320U32R	RHFE44320U32R
4P, 690 Vac 50/60 Hz with LSI Trip Functions		
1600 A	RNFE46160U33R	RHFE44160U33R
2000 A	RNFE46200U33R	RHFE44200U33R
2500 A	RNFE46250U33R	RHFE44250U33R
3200 A	RNFE46320U33R	RHFE44320U33R
Micrologic Ammeter Trip Unit		
4P, 690 Vac 50/60 Hz with LS0 Trip Functions		
1600 A	RNFE46160U42R	RHFE44160U42R
2000 A	RNFE46200U42R	RHFE44200U42R
2500 A	RNFE46250U42R	RHFE44250U42R
3200A	RNFE46320U42R	RHFE44320U42R
4P, 690 Vac 50/60 Hz with LSI Trip Functions		
1600 A	RNFE46160U43R	RHFE44160U43R
2000 A	RNFE46200U43R	RHFE44300U43R
2500 A	RNFE46250U43R	RHFE44350U43R
3200 A	RNFE46320U43R	RHFE44320U43R
4P, 690 Vac 50/60 Hz with LSIG Trip Functions		
1600 A	RNFE46160U44R	RHFE44160U44R
2000 A	RNFE46200U44R	RHFE44200U44R
2500 A	RNFE46250U44R	RHFE44250U44R
3200 A	RNFE46320U44R	RHFE44320U44R
Micrologic Power Trip Unit		
4P, 690 Vac 50/60 Hz with LSI Trip Functions		
1600 A	RNFE46160U63RE1	RHFE44160U63RE1
2000 A	RNFE46200U63RE1	RHFE44200U63RE1
2500 A	RNFE46250U63RE1	RHFE44250U63RE1
3200 A	RNFE46320U63RE1	RHFE44320U63RE1
4P, 690 Vac 50/60 Hz with LSIG Trip Functions		
1600 A	RNFE46160U64RE1	RHFE44160U64RE1
2000 A	RNFE46200U64RE1	RHFE44200U64RE1
2500 A	RNFE46250U64RE1	RHFE44250U64RE1
3200 A	RNFE46320U64RE1	RHFE44320U64RE1

NOTE: See Digest for accessories and other information.

Table 9.10: Interrupting Ratings

	N		H	
	Icu	Ics	Icu	Ics (%Icu)
220/240 V	85 kA	75%	125 kA	75%
380/415 V	70 kA		85 kA	
440 V	65 kA	100%	85 kA	
500/525 V	65 kA		—	
660/690 V	65 kA		—	

© 2017 Schneider Electric
All Rights Reserved
2/15/2017

Breaking Capacities

- CE Marking
- International products—IEC 60947-2 rated. North American products are dual rated, UL 489 and IEC 60947-2.
- MCCBs in I-Line™ plug-on construction and a complete line of accessories are available. Contact your nearest Field Sales office.
- Order entry point is Cedar Rapids, Iowa.

Table 9.11: Circuit Breaker Breaking Capacities

Circuit Breaker Cat. Prefix		Current Rating (Amps)	Short-circuit Ratings (415 Vac)			Isolator Rating	Impulse Rating U_{imp} (kV)	Insulation Rating U_i (Vac)
International	North America		Ultimate I_{cu}	Service I_{cs}	Withstand I_{cw}			
—	FA, FH	15–100 A	10 kA	2.5 kA	N/A	Yes	6	750
—	FA, FH (1 pole) *[1]*	15–100 A	18 kA	9 kA	N/A	Yes	6	750
SFA (1 pole) *[1]* SFA *[2]*	—	16–100 A 16–160 A	25 kA 25 kA	12.5 kA 12.5 kA	N/A N/A	Yes Yes	6 6	750 750
—	FC	15–100 A	10 kA	2.5 kA	N/A	Yes	6	750
SFH	—	16–63 A 80–100 A	65 kA 65 kA	50 kA 33 kA	N/A N/A	Yes Yes	6 6	750 750
—	QB *[3]*	70–250 A *[4]*	10 kA	5 kA	N/A	Yes	6	750
—	LA	125–400 A	20 kA	5 kA	N/A	Yes	6	750
SLA	—	250–400 A	36 kA	18 kA	N/A	Yes	6	750
LC	LC	300–400 A 450–630 A	65 kA 65 kA	65 kA 50 kA	N/A N/A	Yes Yes	6 6	750 750
—	LH	125–400 A	20 kA	5 kA	N/A	Yes	6	750
—	PG	250–1200 A	35 kA	17.5 kA	25 kA	Yes	6	750
	PJ		50 kA	25 kA	10 kA			
	PL		85 kA	42.5 kA	10 kA			
	PK		50 kA	25 kA	25 kA			
—	RG	600–2500 A	35 kA	17.5 kA	32 kA	Yes	6	750
	RJ		50 kA	25 kA	32 kA			
	RL		85 kA	42.5 kA	32 kA			
	RK		70 kA	52.5 kA	32 kA			
—	PA	600–2000 A	50 kA	38 kA	N/A	No	6	750
—	PC, PH	600–2500 A	70 kA	53 kA	N/A	No	6	750
PE, PX	PE, PX	600–2500 A	70 kA	53 kA	12.5	No	6	750

[1] Single pole ratings are 240 V.
[2] SFA 2 & 3 pole marked Line and Load.
[3] IEC rating 415Y/240 Vac; NEMA/UL rating 240 Vac.
[4] 250 A lugs are suitable for copper conductors only.

© 2017 Schneider Electric
All Rights Reserved

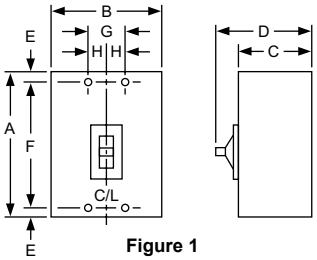

Figure 1

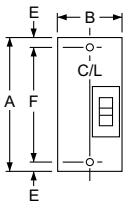

Figure 2

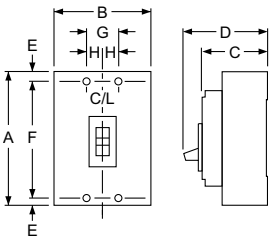

Figure 3

Dimensions

- CE Marking
- International products—IEC 60947-2 rated. North American products are dual rated, UL 489 and IEC 60947-2.
- MCCBs in I-Line™ plug-on construction and a complete line of accessories are available. Contact your nearest Field Sales office.
- Order entry point is Cedar Rapids, Iowa.

Table 9.12: Dimensions

Circuit Breaker	No. Poles	Fig. No.	Dimensions – mm							
			A	B	C	D	E	F	G	H
SFA, SFH/FS, FH	3	1	152	114	80	105	11	130	38	19
SLA/LA, LH	3	1	279	152	103	148	22	235	51	25
QB	2	2	164	76	77	100	*[1]*	108		—
	3	3	164	114	77	100	*[1]*	108	38	19
PG, PJ, PL	2, 3	4	414	210	140	204	106	200	200	—
RG, RJ, RL	2, 3	5	381	420	160	365	222	362	390	—

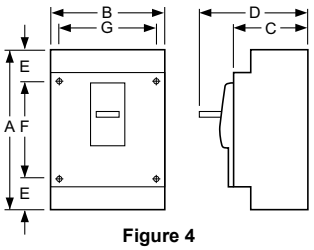

Figure 4

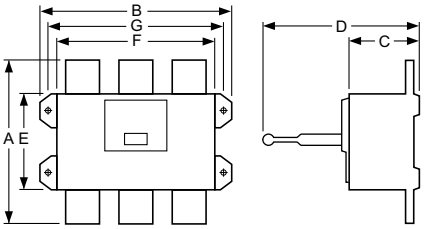

Figure 5

[1] Dimensions E are 40 mm at ON end and 16 mm at OFF end.

© 2017 Schneider Electric
All Rights Reserved

Section 10

International Panelboards

NQX Panelboards **10-2**

Factory Assembled Circuit Breaker Panelboard **10-2**
10-2

NQX Panelboard

© 2017 Schneider Electric
All Rights Reserved

NOTE: For export application only. Not UL Listed

Table 10.1: Panelboard Information

Service	1Ø3W 110/220, 127/220, 115/230/ Vac 50 Hz, 60 Hz 3Ø4W 220/110, 220/127, 230/115, 380/220, 415Y/240, 400/230 Vac 50 Hz, 60 Hz
Branches	Plug-on QOXD and Bolt-on QOBXD
	10–100 A QOXD and QOBXD 1-, 2-, and 3-pole (3000 AIR)
Boxes	Galvanized steel with removable endwalls with knockouts on one end.
	Two sizes: • NQB — 14 in. W x 5.75 in. D — 225 A interior maximum (availability to be announced) • MH — 20 in. W x 5.75 in. D — 600 A main lug interior maximum
Fronts	• Gray baked enamel finish (ANSI49) • Door with flush lock • Mono-Flat™ fronts on 100–225 A. Front mounts to the interior with trim screws. (Both trim screws and door hinges are concealed.) • Fronts for 400A–600 A interiors are louvered and mount to the enclosure with trim screws. (Door hinges are concealed.)
Common Features	Sub-Feed Lugs, Sub-Feed Circuit Breaker, Split Bus, Feed-Through Lugs
Bus Bars	• Aluminum bus, standard — 100 A, 225 A, and 400 A interiors • Copper bus, optional — 100 A, 225 A, and 400 A interiors • Copper bus, standard — 600 A interiors
Neutrals	• 100% Aluminum neutral, standard • 100% Copper neutral, optional • 200% Neutral, optional
Enclo-sures	• Type 1, standard • Type 3R, 5, and 12, optional • Type 3R, 4, 4X, and 12 Stainless Steel, optional **NOTE:** Price factory assembled NQX panelboard in the Quote to Cash Product Selector. Select "NQ" panelboard, then select the appropriate "International Voltage".
Order Point	Peru, IN

Table 10.2: Mains

Mains Rating	Main Lugs	Main Circuit Breaker
70 A	—	QOBXD[1], QB, HD
100 A	Yes	QOBXD[1], QB, HD
150 A	—	QB, HD
225 A	Yes	QB
250 A	—	JD
400 A	Yes	LA
600 A	Yes	—

Table 10.3: Distributed Phase Bussing

Main Lugs		Main Circuit Breaker		
100 A	(1) #6-2/0 Al or Cu	100 A	QOXD/QOBXD	(1) #4-2/0 Al or Cu
225 A	(1) #6-350 kcmil Al or Cu	150 A	HD	(1) #14-3/0 Al or Cu
400 A	(1) 1/0-750 kcmil, or	225 A	QB	(1) #4-300 kcmil Al or Cu, or
	(2) 1/0-350 kcmil Al or Cu		JD	(1) #3/0-350 kcmil Al or Cu
600 A	(2) 1/0-750 kcmil Al or Cu	250 A	JD	(1) #3/0-350 kcmil Al or Cu
		400 A	LA	(1) #1-600 kcmil, or
				(2) #1-250 kcmil Al or Cu

[1] Available at 240 Vac maximum.

© 2017 Schneider Electric
All Rights Reserved
2/15/2017

Section 11

Obsolescent and Obsolete Circuit Breakers

Obsolescent and Obsolete Types 11-2

Circuit Breaker Availability 11-2
Pictorial and Dimensions 11-4

Obsolescent Circuit Breakers 11-6

PowerPact™ D-Frame Circuit Breakers 11-6
F-Frame Thermal-Magnetic Circuit Breakers 11-7
K-Frame Thermal-Magnetic Circuit Breakers 11-8
L-Frame Thermal-Magnetic Circuit Breakers 11-9
L-Frame Micrologic™ Series B Trip Circuit Breakers 11-10
Mission Critical Circuit Breakers 11-13
Automatic Molded-Case Switches 11-14
Mag-Gard™ Motor Circuit Protector 11-15
UL Listed Marine Circuit Breakers 11-17
Circuit Breakers for NQO, NQOB, NQOD and ML Panelboards 11-18
Rating Plugs For Obsolete Electronic Trip Circuit Breakers 11-19
EH/EHB Circuit Breakers 11-20
FJA Thermal-Magnetic Circuit Breakers 11-21
QE Metering Circuit Breakers 11-22
KD/KG Thermal-Magnetic Circuit Breakers 11-23
NHL Thermal-Magnetic Molded Case Circuit Breaker 11-24

Molded Case Circuit Breakers 11-25

M-Frame Thermal-Magnetic Circuit Breakers 11-25

Circuit Breaker Accessories 11-26

Circuit Breakers Electrical Accessories 11-26
PowerPact™ Circuit Breakers Miscellaneous Accessories 11-27
Neutral CTs and Micrologic™ Series B Trip Unit Accessories 11-29
Field-Installable Accessories 11-30
Electrical Operators and Handle Accessories 11-31
Lug Information 11-32

Electronic Products 11-34

Micrologic™ Series 2/3/A/B Trip Unit Test Sets 11-34

Ground-Fault Protection 11-35

Micrologic™ Add-On Ground-Fault Module (GFM) 11-35

Obsolescent Circuit Breakers 11-36

Masterpact™ M/MP/MC Circuit Breakers, UL 489/1066 Listed 11-36
Masterpact™ M/MP/MC Circuit Breaker Control Units 11-37
Masterpact™ M/MP/MC Circuit Breaker Accessories 11-38
Masterpact™ M/MP/MC Circuit Breaker Spare Parts 11-40

© 2017 Schneider Electric
All Rights Reserved

Circuit Breaker Availability

Table 11.1: Circuit Breaker Availability

Series of Cat. No.	Frame Size	Volts	Poles	Amperes	Availability	
					Obsolete No Longer Available	Obsolescent
115A–130A	MO-1 (Add-on)	120 Vac	1	15–30	X	
215A–250A	MO-2 (Add-on)	120/240 Vac	2	15–50	X	
215B–250B	MO-2B (Add-on)	120/240 Vac	2 S.P.	15–50	X	
70000	Multi-Breaker	120 Vac	4 S.P.	15–50	X	
111600	MO-2	120/240 Vac	2	15–30	X	
131600	MO-2	120/240 Vac	2	15–30	X	
151101	MO-1	120 Vac	1	15–30	X	
151600	MO-2	120/240 Vac	2	15–30	X	
161101	MO-1	120 Vac	1 With SN	15–30	X	
161600	MO-2	120/240 Vac	2 With SN	15–30	X	
161700	MO-2	120/240 Vac	2 S.P.	15–30	X	
260000	MB (Left-hand)	120 Vac	4 S.P.	15–50	X	
270000	MB (Right-hand)	120 Vac	4 S.P.	15–50	X	
460000	MO-8	120/240 Vac	4 S.P.	15–50	X	
470000	MO-4	120/240 Vac	4 S.P.	15–40	X	
480000	MO-4 (Plug-in)	120/240 Vac	4 S.P.	15–50	X	
940000	LM	600 Vac	2-3	125–800	X	
950000	50 A Form W	250 Vac	1, 2, 3	15–50	X	
951000	50 A Form W	250 Vac	2, 3	15–50	X	
952000	50 A Form W	250 Vac	2, 3	15–50	X	
953000	Flip-on Form W	230 Vac	1, 2, 3	15–50	X	
954000	100 A Form W (Trip Unit)	250 Vac	2, 3	50–100	X	
955000	100 A Form W	250 Vac	2, 3	50–100	X	
956000	225 A Form W	250 Vac	2, 3	70–225	X	
957000	400 A (KL) Form W	250 Vac	2, 3	125–400	X	
958000	600 A (WL) Form W	250 Vac	2, 3	225–600	X	
959000	KL Frame Only	600 Vac	2, 3	125–400	X	
961000	50 A Form W	600 Vac	2, 3	15–50	X	
962000	50 A Form W	600 Vac	2, 3	15–50	X	
964000	100 A Form W	600 Vac	2, 3	50–100	X	
965000	100 A Form W	600 Vac	2, 3	50–100	X	
966000	225 A Form W	600 Vac	2, 3	70–225	X	
967000	400 A (KL) Form W	600 Vac	2, 3	125–400	X	
968000	600 A (WL) Form W	600 Vac	2, 3	225–600	X	
970000	Type L Form W	240 Vac	1, 2, 3	10–50	X	
971000	Type L Form W (Flip-on)	240 Vac	1, 2, 3	10–50	X	
972000	M1 (Bolt-on)	240 Vac	2, 3	15–70	X	
973000	M2 (Bolt-on)	240 Vac	2, 3	50–100	X	
974000	MM (M) (Bolt-on)	120/240 Vac	2 S.P.	15–50	X	
975000	100 A Trip Unit	250 Vac	2, 3	50–100	X	
976000	225 A Trip Unit	250 Vac	2, 3	70–225	X	
977000	KL Trip Unit	600 Vac	2, 3	125–400	X	
978000	LM Trip Unit	600 Vac	2, 3	225–800	X	
979000	WL Frame	600 Vac	2, 3	225–600	X	
982000	50 A Form W (Flip-on)	125/250 Vac	1, 2, 3	15–50	X	
984000	ML-2	250 Vac	2, 3	50–100	X	
985000	100 A (G) Form W	600 Vac	2, 3	50–100	X	
986000	100 A (F) Form W	600 Vac	2, 3	10–100	X	
987000	ML-3	250 Vac	2, 3	125–225	X	
988000	ML-1	250 Vac	2, 3	15–100	X	
989000	ML-1	480 Vac	2, 3	15–100	X	
991000	QB	120/240 Vac	1	15–50	X	
992000	ML	120/240 Vac	1, 2, 3	10–50	X	
992900	ML Form Y	277 Vac	1	10–20	X	
994000	ML-2	600 Vac	2, 3	15–100	X	
995000	100 A (G) Form W	600 Vac	2, 3	15–100	X	
996000	100 A (F) Form W	600 Vac	2, 3	15–100	X	
997000	ML-3	600 Vac	2, 3	50–225	X	
998000	ML-1	600 Vac	2, 3	15–100	X	
999000	ML-1	600 Vac	2, 3	15–100	X	
A1B	100 A	120/240 Vac	1, 2, 3	15–100	X	
PowerPact D-Frame	600 A	600 Vac	3, 4	150–600	X	See page 3-30
EH, EHB	100 A	480Y/277 Vac	1, 2, 3	15–100	EH	See page 11-20
FC	100 A	480 Vac	2, 3	15–100	FC	See page 11-7
FD, FG, FJ	100 A	480Y/277 Vac	1, 2, 3	15–100	X	
GJL / NENL	100 A	480 Vac	3	15–100	X	
KA, KH, KC	250 A	480 Vac	2, 3	70–250	X	See page 3-30
FI, FIL	100 A	480 Vac	2, 3	20–100	X	
KI, KIL	225 A	480 Vac	2, 3	110–225	X	
LI, LIL	400 A	480 Vac	2, 3	300–400	X	
KD, KG	250 A	240 Vac	2, 3	100–250	X	See page 11-23
LA(JKL) 0000	400 A	600 Vac	2, 3	125–400	X	
MA-0000	1000 A	600 Vac	2, 3	125–1000	X	
Masterpact M/MP/MC	6300 A	600 Vac	3, 4	800–6300	—	See page 11-36 through page 11-40
MEC	225 A	600 Vac	2, 3	100–225	X	
MEC	400 A	600 Vac	2, 3	250–400	X	
MEC	800 A	600 Vac	2, 3	400–800	X	

© 2017 Schneider Electric
All Rights Reserved
2/15/2017

Table 11.1 Circuit Breaker Availability (cont'd.)

Series of Cat. No.	Frame Size	Volts	Poles	Amperes	Availability	
					Obsolete No Longer Available	Obsolescent
MHAB, BC, CA	MM (Plug-on)	120/240 Vac	2 S.P.	15–50	X	
MHAB, BC, CA	M1 (Plug-on)	120/240 Vac	2, 3	15–70	X	
Q2, Q2-H, Q2H	225 A	240 Vac	2, 3	100–225	X	
QE	200 A	120/240 Vac	2, 3	70–200	X	See page 11-22
SE	4000 A	600 Vac	3	200–4000	X	
CK	1200 A	480 Vac	3	400–1200	X	
CM	2000 A	480 Vac	3	1250–2000	X	
XO	50 A	120/240 Vac	1, 2	15–50	X	
Y1B	100 A	277 Vac	1	15–100	X	
LXi	600 A	600 Vac	3	100–600	X	
ME, MEL	250 A, 400 A, 800 A	600 Vac	3	100–800	X	
MX, MXL	250 A, 400 A, 800 A	600 Vac	3	100–800	X	
NA, NAL	1200 A	600 Vac	3	600–1200	X	
NC, NCL	1200 A	600 Vac	3	600–1200	X	
NX, NXL	1200 A	600 Vac	3	600–1200	X	
NE, NEL	1200 A	600 Vac	3	600–1200	X	
PAF	2000 A	600 Vac	3	600–2000	X	
PHF	2000 A	600 Vac	2, 3	600–2000	X	
PCF	2500 A	600 Vac	2, 3	1600–2500	X	
PXF	2500 A	600 Vac	2, 3	600–2500	X	
PEF	2500 A	600 Vac	3	600–2500	X	

Contact your local Sales Office for availability.

© 2017 Schneider Electric
All Rights Reserved

Dimensions

LIL

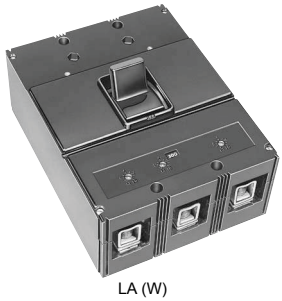

LA (W)

MA (W)

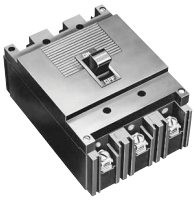

MIL-1

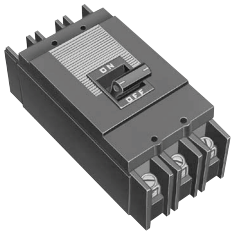

MIL-2

Table 11.2: Circuit Breaker Dimensions

Circuit Breaker Type	Cat. No. Prefix	Number Poles	Dimensions															
			A		B		C		D		E		F		G		H	
			in.	mm	in.	mm	in.	mm	in.	mm	in.	mm	in.	mm	in.	mm	in.	mm
QB	991	1	3.75	95	1.00	25	2.50	63	3.06	78	—	—	—	—	—	—	—	—
ML	992	1	6.00	152	1.00	25	3.09	78	3.91	99	.88	22	4.25	108	—	—	.33	8
	992	2	6.00	152	2.00	51	3.09	78	3.91	99	.88	22	4.25	108	—	—	.19	5
	992	3	6.00	152	3.00	76	3.09	78	3.91	99	.88	22	4.25	108	—	—	1.83	46
ML-1	999	2, 3	6.50	165	4.47	113	3.06	78	3.94	100	.94	24	4.25	108	1.50	38	.75	19
ML-2	994	2, 3	9.56	243	4.47	113	3.75	95	4.88	124	1.69	43	6.50	165	1.50	38	.75	19
ML-3	997	2, 3	10.38	264	5.97	152	3.88	98	5.31	135	1.69	43	6.63	168	2.00	51	1.00	25
LA (W)	LA	2, 3	10.75	273	8.25	209	4.31	109	5.50	140	.63	16	9.50	241	2.75	70	1.38	35
MA (W)	MA	2, 3	16.00	406	8.25	209	4.06	103	6.06	154	.88	22	14.25	362	2.75	70	1.38	35
KL	967	2, 3	22.00	559	8.25	209	5.50	140	7.00	178	.63	16	20.75	527	2.75	70	1.38	35
LM	940	2, 3	22.00	559	8.25	209	5.50	140	7.00	178	.63	16	20.75	527	2.75	70	1.38	35
FIL (4)	IFL	2, 3	8.29	210	4.46	113	3.67	93	4.70	119	.44	11	7.41	188	1.50	38	.75	19
KIL (4)	IKL	2, 3	11.00	279	6.00	152	4.02	102	5.51	140	.88	22	9.25	235	2.00	51	1.00	25
LIL	ILL	2, 3	11.00	279	12.00	305	4.05	103	6.11	155	.88	22	9.25	235	4.00	102	2.00	51
NHL	NHL	2, 3	20.00	508	12.00	305	5.75	146	8.12	206	5.87	149	7.76	197	4.00	102	2.00	51

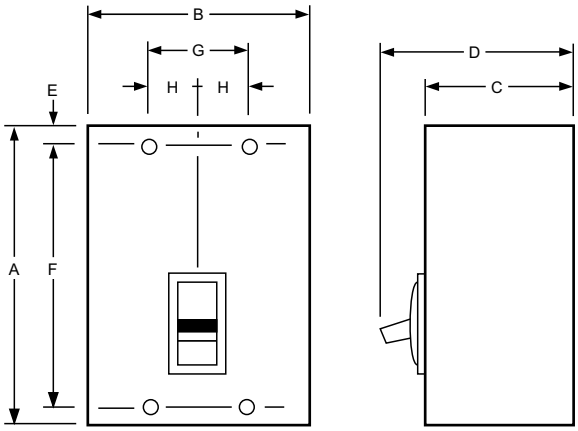

© 2017 Schneider Electric
All Rights Reserved
2/15/2017

Figure 1

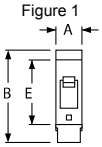

Figure 2

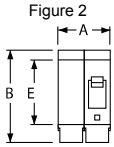

Figure 3

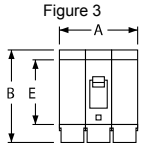

EH, EHB

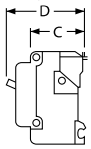

Figure 4

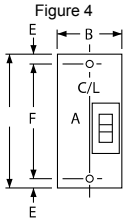

Figure 5

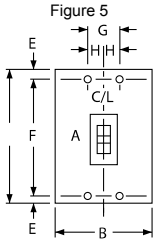

Q2L

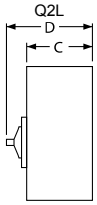

Figure 6

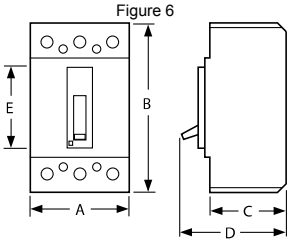

Figure 7

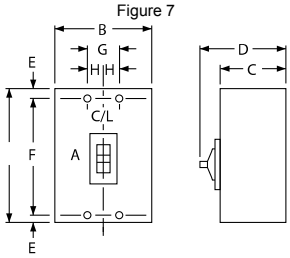

Figure 8

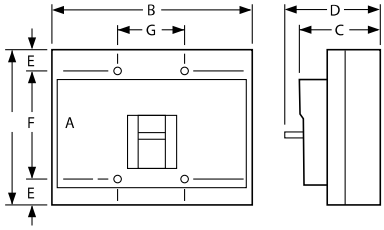

Figure 9

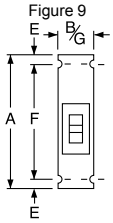

Figure 10

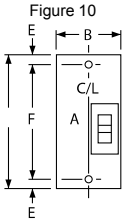

Figure 11

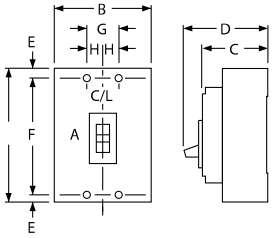

Figure 12

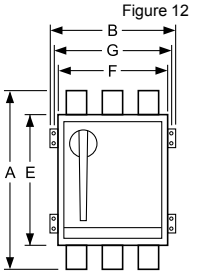

Figure 13

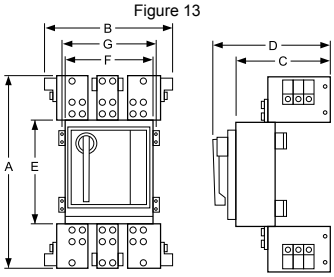

Figure 23

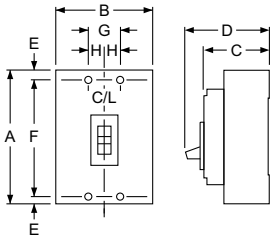

Figure 28

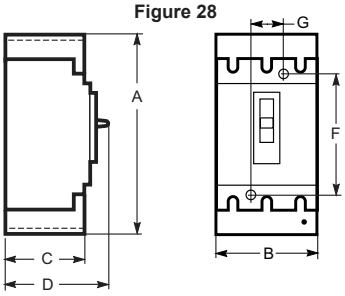

Table 11.4: Circuit Breaker Dimensions

Circuit Breaker Cat. No. Prefix	No. Poles	Fig. No.	Dimensions—In.							
			A	B	C	D	E	F	G	H
EH, EHB	1	1	1.00	3.50	2.00	2.97	2.44	—	—	—
	2	2	2.00	3.50 *[1]*	2.00	2.97	2.44	—	—	—
	3	3	3.00	3.50 *[1]*	2.00	2.97	2.44	—	—	—
FDA, FGA, FJA	1	Width 1.50								
	2, 3	Width 3.00								
FIL, KIL	2, 3	11	8.00	4.50	3.66	4.75	0.44	7.13	1.50	0.75
DG, DJ, DL	3	28	13.38	5.51	3.75	6.61	2.22	8.93	1.77	—
KAL, KCL, KHL	2, 3	23	8.00	4.50	3.66	4.75	0.44	7.13	1.50	0.75
KIL	2, 3	23	8.00	4.50	3.66	4.75	0.44	7.13	1.50	0.75
KD, KG	2, 3	6	4.12	7.35	3.20	4.17	3.34	—	—	—
LC, LI, LE, LX, LXI	2, 3	11	11.86	7.50	5.48	6.74	0.55	10.75	2.50	—
LIL, LXIL	2, 3	11	11.86	7.50	5.48	6.74	0.55	10.75	2.50	
Q4L, LAL, LHL	2, 3	11	11.00	6.00	4.06	5.84	0.88	9.25	2.00	1.00
Q2L, Q2L-H	2	4	6.44	3.00	3.16	3.92	*[2]*	4.25	—	—
	3	5	6.44	4.50	3.16	3.92	*[2]*	4.25	1.50	0.75
MXL, MEL	2, 3	7	14.75	9.00	4.37	6.50	1.66	11.43	3.00	1.50
NAL, NCL, NEL, NXL	2, 3	8	12.12	14.98	6.40	8.07	1.69	8.75	5.00	—
FCL	1	9	6.00	1.50	3.16	4.13	0.44	5.13	1.50	—
	2	10	6.00	3.00 *[3]*	3.16	4.13	0.44	5.13	—	—
	3	11	6.00	4.50	3.16	4.13	0.44	5.13	1.50	0.75
MAL, MHL	2, 3	8	14.00	9.00	4.53	6.50	1.66	10.69	3.00	1.50
NA, NC, NX, NE	2, 3	8	12.12	14.98	6.40	8.07	1.69	8.75	5.0	—
PA, PH, PX, PE	2, 3	12	20.06	13.70	7.25	10.47	14.00	12.00	12.75	—
PC, PX-25, PE-20, PE-25	2, 3	13	26.10	23.30	13.33	16.55	14.10	12.00	—	—

Table 11.3: Shipping Weights

Frame Size	Approx. Shipping Weight (Lbs.)
FIL	8
KAL, KHL	7
MAL, MHL	34
PAF, PHF	69
PXF, PEF	80

[1] 70–100 A is 4.00 in.
[2] Dimensions E are 1.59 in at ON end and 0.63 in at OFF end.
[3] FCL 2-pole circuit breaker dimension B is 4.50 as in Fig. 23.

© 2017 Schneider Electric
All Rights Reserved

D-Frame Circuit Breaker

PowerPact D-Frame Circuit Breakers

Table 11.5: D-Frame 3P 600 A Circuit Breaker, Frame Only

Basic Frame Only (600 Vac) *[1]*			
Ampere Rating	Interrupting Rating		
	G	J	L
150 A	DGL36150F40	DJL36150F40	DLL36150F40
250 A	DGL36250F40	DJL36250F40	DLL36250F60
400 A	DGL36400F40	DJL36400F40	DLL36400F40
600 A	DGL36600F60	DJL36600F60	DLL36600F60

Table 11.6: D-Frame 3P 600 A Circuit Breaker Field-Installable Trip Units

Field Installable D-Frame Electronic Trip Unit Long-time, Short-time and Instantaneous Protection			
Description	Factory Code	Trip Function	Cat. No.
STR23SP	E20	LS	36940
STR53UP-F	E53	LSI	36942
STR53UP-FT	E54	LSIG	36943
STR53UP-FI	E58	LSI	36944
STR53UP-FTI	E59	LSIG	36945

Table 11.7: D-Frame (600 A 600 Vac) 3P 50/60 Hz Circuit Breaker with Lugs and Electronic Trip Units *[2]*

Electronic Trip Unit Type	Trip Function	Trip Unit	Continuous Current	Interrupting Rating			Terminal Wire Range (AWG/kcmil)
				Cat. No.	J	L	
Standard	LS	STR23SP	150 A	DGL36150E20	DJL36150E20	DLL36150E20	(1) 2–600 Cu or (1) 2–500 Al
			250 A	DGL36250E20	DJL36250E20	DLL36250E20	
			400 A	DGL36400E20	DJL36400E20	DLL36400E20	
			600 A	DGL36600E20	DJL36600E20	DLL36600E20	(2) 2/0–350 Cu or (2) 2/0–500 Al
	LSI	SR53UP-F *[3]*	150 A	DGL36150E53	DJL36150E53	DLL36150E53	(1) 2–600 Cu or (1) 2–500 Al
			250 A	DGL36250E53	DJL36250E53	DLL36250E53	
			400 A	DGL36400E53	DJL36400E53	DLL36400E53	
			600 A	DGL36600E53	DJL36600E53	DLL36600E53	(2) 2/0–350 Cu or (2) 2/0–500 Al
	LSIG	STR53UP-FT *[3]*	150 A	DGL36150E54	DJL36150E54	DLL36150E54	(1) 2–600 Cu or (1) 2–500 Al
			250 A	DGL36250E54	DJL36250E54	DLL36250E54	
			400 A	DGL36400E54	DJL36400E54	DLL36400E54	
			600 A	DGL36600E54	DJL36600E54	DLL36600E54	(2) 2/0–350 Cu or (2) 2/0–500 Al
Ammeter	LSI	STR53UP-FI *[3]*	150 A	DGL36150E58	DJL36150E58	DLL36150E58	(1) 2–600 Cu or (1) 2–500 Al
			250 A	DGL36250E58	DJL36250E58	DLL36250E58	
			400 A	DGL36400E58	DJL36400E58	DLL36400E58	
			600 A	DGL36600E58	DJL36600E58	DLL36600E58	(2) 2/0–350 Cu or (2) 2/0–500 Al
	LSIG	STR53UP-FTI *[3]*	150 A	DGL36150E59	DJL36150E59	DLL36150E59	(1) 2–600 Cu or (1) 2–500 Al
			250 A	DGL36250E59	DJL36250E59	DLL36250E59	
			400 A	DGL36400E59	DJL36400E59	DLL36400E59	
			600 A	DGL36600E59	DJL36600E59	DLL36600E59	(2) 2/0–350 Cu or (2) 2/0–500 Al

Table 11.8: D-Frame Interrupting Ratings

Voltage	Interrupting Rating		
	G	J	L
240 Vac	65 kA	100 kA	125 kA
480 Vac	35 kA	65 kA	100 kA
600 Vac	18 kA	25 kA	25 kA

Table 11.9: D-Frame Termination Options

Termination Letter	Termination Option
F	No Lugs (Includes terminal nut kit on both ends)
L	Lugs both ends
M	Lugs ON end Terminal Nut Kit Off end
P	Lugs OFF end Terminal Nut Kit On end
N	Plug-in
D	Drawout
S	Rear Connected

D G **L** 3 6 4 0 0
For factory-installed termination, place termination letter in the third block of the circuit breaker catalog number.
Termination Letter
D G L 3 6 4 0 0 E 2 0

Accessories see page 11-26
Dimensions see page 3-29

Table 11.10: Plug-In and Drawout Mountings for D-Frame Circuit Breakers

Description		Poles	Plug-in Mounting		Drawout Mounting	
			Factory Installed Cat. No.	Field-Installable Cat. No.	Factory Installed Cat. No.	Field-Installable Cat. No.
Kit (stationary and moving parts)		3	N	32546	D	32548
		4	N	M32547	D	M32549
Stationary Part	Plug-in base	3		32514		32514
		4		M32515		M32515
	Fixed part of chassis					32532
Moving Part			HJ00		HJ00	
	Moving part of chassis					32533
	Short terminal covers	3		32562		32562
		4		32563		32563
	Power connections	3		3x 32518		3x 32518
		4		4x 32518		4x 32518

Table 11.11: Plug-In and Drawout Accessories for D-Frame Circuit Breakers

Description			Field-Installed Cat. No.
Secondary Disconnecting Blocks	Fixed Part	9-wire connector	29273
	Moving Part	9-wire connector	32523
		Support for 3 moving connectors	32525
Shutters	Two shutters for plug-in base		32521
Chassis Accessories	Extended escutcheon for toggle		32534
	Locking device (key lock is not included)		29286
	Two position indicating switches (connected/disconnected)		29287

[1] Available with lugs (L) or bus (F) connections only.
[2] D-frame circuit breakers 400 A and below are 100% rated. 600 A is standard (80%) rated only.
[3] F = Fault indicator; T = Residual-type ground-fault protection; I = Ammeter

© 2017 Schneider Electric
All Rights Reserved

F-Frame CIrcuit Breakers

NOTE: FC circuit breakers are obsolete. Please refer to Digest for PowerPact™ molded case circuit breakers for new installations or replacement.

Thermal-magnetic molded case circuit breakers shown on page 11-7 are permanent trip UL Listed, CSA Certified, IEC rated, and also meet the requirements of Federal Specification W–C–375B/GEN as indicated in Digest Section 7.

NOTE: Consider using PowerPact circuit breakers for situations requiring circuit breaker accessories. See Digest Section 7 for more information.

FAL/FHL 2P
15–100 A

FAL/FHL 3P
15–100 A

FA 2P
3 in. (76 mm)
Mounting Height

FA 3P
4.5 in. (114 mm)
Mounting Height

Table 11.12: F-Frame—100 A, Thermal-Magnetic, Individually-Mounted, 480 Vac

Ampere Rating	Fixed AC Magnetic Trip		Extra-High Interrupting		Terminal Wire Range (AWG)
	Hold	Trip	2P Cat. No. 480 Vac, 250 Vdc	3P Cat. No. 480 Vac, 250 Vdc	
15 A	275 A	600 A	—	FCL34015	CU30FA4 (1) 14–10 Cu
20 A	275 A	600 A	—	FCL34020	
25 A	275 A	600 A	—	FCL34025	
30 A	275 A	600 A	—	FCL34030	
35 A	400 A	850 A	—	FCL34035	AL100FA4 (1) 14–3 Cu or (2) 12–1 Al
40 A	400 A	850 A	—	FCL34040	
45 A	400 A	850 A	—	FCL34045	
50 A	400 A	850 A	FCL24050	FCL34050	
60 A	800 A	1450 A	FCL24060	FCL34060	
70 A	800 A	1450 A	FCL24070	FCL34070	
80 A	800 A	1450 A	FCL24080	FCL34080	
90 A	900 A	1700 A	FCL24090	FCL34090	
100 A	900 A	1700 A	FCL24100	FCL34100	

Table 11.13: Interrupting Ratings

Voltage	FAL			FHL	FCL	FIL
	240 Vac	480 Vac	600 Vac			
240 Vac	10 kA	18 kA (1P), 25 kA (2P, 3P)	25 kA	25 kA (1P) 65 kA (2P, 3P)	100 kA	200 kA
480 Vac	—	18 kA	18 kA	25 kA (2P, 3P)	65 kA	200 kA
600 Vac	—	—	14 kA	18 kA (2P, 3P)	—	100 kA

Table 11.14: Termination Option

	Termination Letter
F = No Lugs	For factory-installed termination, place termination letter in the third block of the circuit breaker catalog number. F A **L** 3 6 1 0 0
L = Lugs both ends	
P with MT Suffix = Lugs ON end	
P = Lugs OFF end	

Table 11.15: F-Frame—100 A, Thermal-Magnetic, I-Line™ Construction, 480 Vac

Ampere Rating	Fixed AC Magnetic Trip		Extra-High Interrupting		Terminal Wire Range (AWG)
	Hold	Trip	2P *[4]* Cat. No. 480 Vac *[5]*	3P Cat. No. 480 Vac	
15 A	275 A	600 A	—	FC34015	CU30FA4 (1) 14–10 Cu
20 A	275 A	600 A	—	FC34020	
25 A	275 A	600 A	—	FC34025	
30 A	275 A	600 A	—	FC34030	
35 A	400 A	850 A	—	FC34035	AL100FA4 (1) 14–3 Cu or (1) 12–1 Al
40 A	400 A	850 A	—	FC34040	
45 A	400 A	850 A	—	FC34045	
50 A	400 A	850 A	FC24050( )	FC34050	
60 A	800 A	1450 A	FC24060( )	FC34060	
70 A	800 A	1450 A	FC24070( )	FC34070	
80 A	800 A	1450 A	FC24080( )	FC34080	
90 A	900 A	1700 A	FC24090( )	FC34090	
100 A	900 A	1700 A	FC24100( )	FC34100	

Table 11.16: Phase Options

Phase Option Letter	1P	2P	3P
A B C	FA14035A FA14035B FA14035C	—	—
AB AC BC	—	FA24030AB FA24030AC FA24030BC	—
ABC CBA	—	—	FA34030 FA34030CBA

Table 11.17: Interrupting Ratings

FA			FH	FC	FI
240 Vac	480 Vac	600 Vac			
10 kA	18 kA (1P), 25 kA (2P, 3P)	25 kA	25 kA (1P) 65 kA (2P, 3P)	100 kA	200 kA
—	18 kA	—	—	65 kA	—
—	18 kA	18 kA	25 kA (2P, 3P)	65 kA	200 kA
—	—	14 kA	18 kA (2P, 3P)	—	100 kA

Accessories see page 11-26
Optional Lugs see page 11-32
Dimensions see page 11-4
Enclosures: see Digest Section 7

[4] 1P and 2P circuit breaker catalog numbers are completed by adding the required phase connection letters as a suffix. See Phase Options Table.
[5] FCL 2P circuit breakers are built using 3P module.

© 2017 Schneider Electric
All Rights Reserved

KAL/KHL
2P and 3P
70–250 a

KIL36250

KA/KH/KC 2P and 3P
4.5 IN. (114 mm)
Mounting Height

Table 11.18: Phase Options

Phase Option Letter	2P	3P
AB AC BC	KA26250AB KA26250AC KA26250BC	—
ABC CBA	—	KA36250 KA36250CBA

Table 11.19: Interrupting Ratings

Voltage	KA, KAL	KH, KHL	KC, KCL	KI, KIL
240 Vac	42 kA	65 kA	100 kA	200 kA
480 Vac	25 kA	35 kA	65 kA	200 kA
600 Vac	22 kA	25 kA	—	100 kA

Accessories see page 11-30
Optional Lugs see page 3-26
Dimensions see page 3-29
Enclosures: see Digest Section 7

K-Frame Circuit Breakers

NOTE: K-frame circuit breakers are obsolete. Please refer to Digest for PowerPact™ molded case circuit breakers for new installations or replacement.

Table 11.20: K-Frame—250 A, Thermal-Magnetic, Individually-Mounted, 600 Vac

Ampere Rating	Adjustable AC Magnetic Trip *[6]*		Cat. No.				Terminal Wire Range
	Low	High	Standard Interrupt-ing	High Interrupting	Extra-High Interrupting *[7]*	Current Limiting	
2P, 600 Vac, 250 Vdc							
70	350 A	700 A	KAL26070	KHL26070	—	—	AL250KA (1) 4 AWG–350 kcmil Al
80	400 A	800 A	KAL26080	KHL26080	—	—	
90	450 A	900 A	KAL26090	KHL26090	—	—	
100	500 A	1000 A	KAL26100	KHL26100	—	—	
110	550 A	1100 A	KAL26110	KHL26110	KCL24110	KIL26110	
125	625 A	1250 A	KAL26125	KHL26125	KCL24125	KIL26125	
150	750 A	1500 A	KAL26150	KHL26150	KCL24150	KIL26150	
175	875 A	1750 A	KAL26175	KHL26175	KCL24175	KIL26175	
200	1000 A	2000 A	KAL26200	KHL26200	KCL24200	KIL26200	
225	1125 A	2250 A	KAL26225	KHL26225	KCL24225	KIL26225	
250	1250 A	2500 A	KAL26250	KHL26250	KCL24250	KIL26250	
3P, 600 Vac, 250 Vdc							
70	350 A	700 A	KAL36070	KHL36070	—	—	AL250KA (1) 4 AWG–350 kcmil Al
80	400 A	800 A	KAL36080	KHL36080	—	—	
90	450 A	900 A	KAL36090	KHL36090	—	—	
100	500 A	1000 A	KAL36100	KHL36100	—	—	
110	550 A	1100 A	KAL36110	KHL36110	KCL34110	KIL36110	
125	625 A	1250 A	KAL36125	KHL36125	KCL34125	KIL36125	
150	750 A	1500 A	KAL36150	KHL36150	KCL34150	KIL36150	
175	875 A	1750 A	KAL36175	KHL36175	KCL34175	KIL36175	
200	1000 A	2000 A	KAL36200	KHL36200	KCL34200	KIL36200	
225	1125 A	2250 A	KAL36225	KHL36225	KCL34225	KIL36225	
250	1250 A	2500 A	KAL36250	KHL36250	KCL34250	KIL36250	

Table 11.21: K-Frame—250A, Thermal-Magnetic, I-Line™ Construction, 600 Vac

Ampere Rating	Adjustable AC Magnetic Trip *[6]*		Cat. No.				Terminal Wire Range
	Low	High	Standard Interrupt-ing	High Interrupting	Extra-High Interrupting *[7]*	Current Limiting	
2P, 600 Vac, 250 Vdc *[8]*							
70	350 A	700 A	KA26070( )	KH26070( )	—	—	AL250KA (1) 4 AWG–350 kcmil Al
80	400 A	800 A	KA26080( )	KH26080( )	—	—	
90	450 A	900 A	KA26090( )	KH26090( )	—	—	
100	500 A	1000 A	KA26100( )	KH26100( )	—	—	
110	550 A	1100 A	KA26110( )	KH26110( )	KC24110( )	KI26110( )	
125	625 A	1250 A	KA26125( )	KH26125( )	KC24125( )	KI26125( )	
150	750 A	1500 A	KA26150( )	KH26150( )	KC24150( )	KI26150( )	
175	875 A	1750 A	KA26175( )	KH26175( )	KC24175( )	KI26175( )	
200	1000 A	2000 A	KA26200( )	KH26200( )	KC24200( )	KI26200( )	
225	1125 A	2250 A	KA26225( )	KH26225( )	KC24225( )	KI26225( )	
250	1250 A	2500 A	KA26250( )	KH26250( )	KC24250( )	KI26250( )	
3P, 600 Vac, 250 Vdc							
70	350 A	700 A	KA36070	KH36070	—	—	AL250KA (1) 4 AWG–350 kcmil Al
80	400 A	800 A	KA36080	KH36080	—	—	
90	450 A	900 A	KA36090	KH36090	—	—	
100	500 A	1000 A	KA36100	KH36100	—	—	
110	550 A	1100 A	KA36110	KH36110	KC34110	KI36110	
125	625 A	1250 A	KA36125	KH36125	KC34125	KI36125	
150	750 A	1500 A	KA36150	KH36150	KC34150	KI36150	
175	875 A	1750 A	KA36175	KH36175	KC34175	KI36175	
200	1000 A	2000 A	KA36200	KH36200	KC34200	KI36200	
225	1125 A	2250 A	KA36225	KH36225	KC34225	KI36225	
250	1250 A	2500 A	KA36250	KH36250	KC34250	KI36250	

Table 11.22: Walking Beam Mechanical Interlock Components *[9][10]*

Circuit Breaker Prefix	Manually Operated			Electrically Operated		
	Operator Suffix	Walking Beam Ass'y. Cat. No.	Mounting Pan Cat. No.	Operator Suffix	Walking Beam Ass'y Cat. No.	Mounting Pan Cat. No.
KAL	WB	KA4WB	KAWBP4	WBMO	KA9WB	KAWBP9

[6] UL magnetic trip setting tolerances are ±25% for low and ±20% for high from nominal value shown.
[7] KC circuit breakers are 480 Vac.
[8] 2P and 3P circuit breaker catalog numbers are completed by adding the required phase connection letters as a suffix. See Phase Options Table.
[9] Walking Beam Mechanical Interlock requires 2 circuit breakers with WB suffix, 1 walking beam assembly and 1 mounting pan.
[10] Fully enclosed interlocked units are available in Type 1 and Type 3R enclosures, with two neutrals provided in each enclosure. The completely enclosed assembly is not UL Listed. Contact the nearest sales office for more information.

© 2017 Schneider Electric
All Rights Reserved

LIL36600
2P and 3P 300–600 A

L-Frame Molded Case Circuit Breaker

NOTE: Consider using PowerPact™ circuit breakers for situations requiring circuit breaker accessories. See Digest for more information.

Table 11.23: L-Frame—600 A, Current-Limiting, Individually-Mounted Circuit Breakers, 600 Vac

Ampere Rating	Adjustable AC Magnetic Trip		Cat. No.		Terminal Wire Range
	Low	High	Extra-High Interrupting	Current Limiting	
2P, 600 Vac					
300 A	1500 A	3200 A	LCL26300	LIL26300	AL600LI5 (2) 4/0 AWG–500 kcmil Al
350 A	1750 A	3200 A	LCL26350	LIL26350	
400 A	2000 A	3200 A	LCL26400	LIL26400	
450 A	2250 A	4200 A	LCL26450	LIL26450	
500 A	2500 A	4200 A	LCL26500	LIL26500	
600 A	3000 A	4200 A	LCL26600	LIL26600	
3P, 600 Vac					
300 A	1500 A	3200 A	LCL36300	LIL36300	AL600LI5 (2) 4/0 AWG–500 kcmil Al
350 A	1750 A	3200 A	LCL36350	LIL36350	
400 A	2000 A	3200 A	LCL36400	LIL36400	
450 A	2250 A	4200 A	LCL36450	LIL36450	
500 A	2500 A	4200 A	LCL36500	LIL36500	
600 A	3000 A	4200 A	LCL36600	LIL36600	

Table 11.24: Interrupting Ratings

Voltage	LCL	LIL
240 Vac	100 kA	200 kA
480 Vac	65 kA	200 kA
600 Vac	35 kA	100 kA

Accessories see page 11-30
Optional Lugs see page 3-26
Dimensions see page 3-29
Enclosures see Digest Section 7

© 2017 Schneider Electric
All Rights Reserved

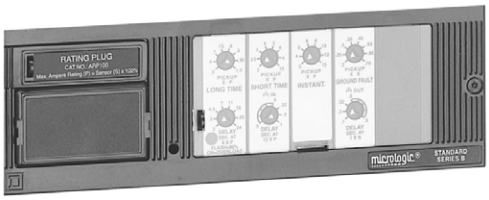

Microloigc Standard-Function Trip Systems (LXL, LXIL)

Standard-Function Features:

- 80% rated
- True RMS sensing
- Interchangeable rating plugs
- LSI, LS(I)G, trip configurations
- Short-time delay = I^2t IN and ground-fault delay = I^2t OUT
- Integral ground-fault testing
- LED long-time pickup indication
- Thermal and magnetic backup protection
- Long-time and ground-fault memory
- Optional local trip indicators—overload, short circuit, ground-fault
- Optional local ammeter/trip indicator
- Universal test set available
- Optional I-Line™ mounting (LX, LXI)
- Optional neutral current transformer for 4-wire systems

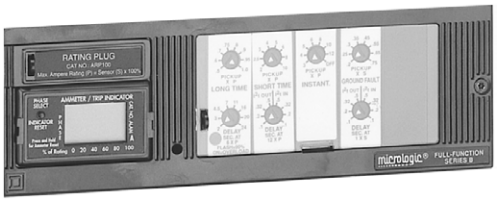

Micrologic Full-Function Trip Systems (LEL)

Full-Function Features:

- 100% rated (600 A sensor LE/LEL circuit breakers are 80% rated)
- True RMS sensing
- Interchangeable rating plugs
- PowerLogic™ compatible
- LI, LIG, LS(I), LS(I)G (instantaneous OFF) configurations
- Short-time delay = I^2t IN & I^2t OUT and ground-fault delay = I^2t IN & I^2t OUT
- Short-time withstand rating
- Integral ground-fault testing
- Optional ground-fault alarm (no trip) (Requires CIM3F with PowerLogic, see Bulletin 0502DB0001.)
- LED long-time pickup indication
- Zone-selective interlocking (short-time & ground-fault)
- Long-time and ground-fault memory
- Local Trip Indicators—overload, short circuit, ground-fault
- Local ammeter/trip indicator
- Universal test set available
- Optional I-Line™ mounting (LE)
- Optional neutral current transformer for 4-wire systems

© 2017 Schneider Electric
All Rights Reserved
2/15/2017

L-Frame, Individually Mounted

Table 11.25: L-Frame—600 A, Micrologic Series B Trip System, Individually-Mounted, 3P, 600 Vac

Sensor Size	Ampere Rating	Trip Function	Cat. No. Standard Function	Cat. No. Standard Function Current Limiting	Cat. No. 100% Rated Full Function *[11]*	Installed Rating Plug	Terminal Wire Range
250	100	LI	—	—	LEL36100LI	ARP040	AL600LI35 (2) 1 AWG–350 kcmil Al/Cu
		LSI	LXL36100	LXIL36100	LEL36100LS		
		LIG	—	—	LEL36100LIG		
		LSIG	LXL36100G	LXIL36100G	LEL36100LSG		
	125	LI	—	—	LEL36125LI	ARP050	
		LSI	LXL36125	LXIL36125	LEL36125LS		
		LIG	—	—	LEL36125LIG		
		LSIG	LXL36125G	LXIL36125G	LEL36125LSG		
	150	LI	—	—	LEL36150LI	ARP060	
		LSI	LXL36150	LXIL36150	LEL36150LS		
		LIG	—	—	LEL36150LIG		
		LSIG	LXL36150G	LXIL36150G	LEL36150LSG		
	175	LI	—	—	LEL36175LI	ARP070	
		LSI	LXL36175	LXIL36175	LEL36175LS		
		LIG	—	—	LEL36175LIG		
		LSIG	LXL36175G	LXIL36175G	LEL36175LSG		
	200	LI	—	—	LEL36200LI	ARP080	
		LSI	LXL36200	LXIL36200	LEL36200LS		
		LIG	—	—	LEL36200LIG		
		LSIG	LXL36200G	LXIL36200G	LEL36200LSG		
	225	LI	—	—	LEL36225LI	ARP090	
		LSI	LXL36225	LXIL36225	LEL36225LS		
		LIG	—	—	LEL36225LIG		
		LSIG	LXL36225G	LXIL36225G	LEL36225LSG		
	250	LI	—	—	LEL36250LI	ARP100	
		LSI	LXL36250	LXIL36250	LEL36250LS		
		LIG	—	—	LEL36250LIG		
		LSIG	LXL36250G	LXIL36250G	LEL36250LSG		
400	300	LI	—	—	LEL36300LI	ARP075	AL600LI5 (2) 4/0 AWG– 500 kcmil Al/Cu
		LSI	LXL36300	LXIL36300	LEL36300LS		
		LIG	—	—	LEL36300LIG		
		LSIG	LXL36300G	LXIL36300G	LEL36300LSG		
	350	LI	—	—	LEL36350LI	ARP088	
		LSI	LXL36350	LXIL36350	LEL36350LS		
		LIG	—	—	LEL36350LIG		
		LSIG	LXL36350G	LXIL36350G	LEL36350LSG		
	400	LI	—	—	LEL36400LI	ARP100	
		LSI	LXL36400	LXIL36400	LEL36400LS		
		LIG	—	—	LEL36400LIG		
		LSIG	LXL36400G	LXIL36400G	LEL36400LSG		
600	450	LI	—	—	LEL36450LI	ARP075	
		LSI	LXL36450	LXIL36450	LEL36450LS		
		LIG	—	—	LEL36450LIG		
		LSIG	LXL36450G	LXIL36450G	LEL36450LSG		
	500	LI	—	—	LEL36500LI	ARP083	
		LSI	LXL36500	LXIL36500	LEL36500LS		
		LIG	—	—	LEL36500LIG		
		LSIG	LXL36500G	LXIL36500G	LEL36500LSG		
	600 *[12]*	LI	—	—	LEL36600LI	ARP100	
		LSI	LXL36600	LXIL36600	LEL36600LS		
		LIG	—	—	LEL36600LIG		
		LSIG	LXL36600G	LXIL36600G	LEL36600LSG		

NOTE: Consider using PowerPact™ circuit breakers for situations requiring circuit breaker accessories.

Accessories see page 11-30
Optional Lugs see page 3-26
Dimensions see page 3-29

Table 11.26: Interrupting Ratings

Voltage	LXL	LEL	LXIL
240 V	100 kA	100 kA	200 kA
480 V	65 kA	65 kA	200 kA
600 V	35 kA	35 kA	100 kA

[11] Substitute (A) in place of (G) for ground-fault alarm (pickup indication only). Requires CIM3F and Powerlogic, or see Data Bulletin 0502DB0001. No instantaneous OFF position for LI or LIG trip function type circuit breakers.
[12] 600 A Sensor is 80% rated.

© 2017 Schneider Electric
All Rights Reserved

L-Frame Micrologic™ Series B Trip Circuit Breakers

NOTE: Consider using PowerPact™ circuit breakers for situations requiring circuit breaker accessories. See Digest Section 7 for more information.

Table 11.27: L-Frame—600 A, Micrologic Series B Trip System, I-Line™ Construction, 3P, 600 Vac *[13]*

Ampere Rating	Trip Function	Cat. No.			Installed Rating Plug	Terminal Wire Range
		Standard Function	Standard Function Current Limiting	100% Rated Full Function *[14]*		
100	LI	—	—	LE36100LI	ARP040	AL600LI35 (2) 1 AWG–350 kcmil Al/Cu
	LSI	LX36100	LXI36100	LE36100LS		
	LIG	—	—	LE36100LIG		
	LSIG	LX36100G	LXI36100G	LE36100LSG		
125	LI	—	—	LE36125LI	ARP050	
	LSI	LX36125	LXI36125	LE36125LS		
	LIG	—	—	LE36125LIG		
	LSIG	LX36125G	LXI36125G	LE36125LSG		
150	LI	—	—	LE36150LI	ARP060	
	LSI	LX36150	LXI36150	LE36150LS		
	LIG	—	—	LE36150LIG		
	LSIG	LX36150G	LXI36150G	LE36150LSG		
175	LI	—	—	LE36175LI	ARP070	
	LSI	LX36175	LXI36175	LE36175LS		
	LIG	—	—	LE36175LIG		
	LSIG	LXL36175G	LXI36175G	LE36175LSG		
200	LI	—	—	LE36200LI	ARP080	
	LSI	LX36200	LXI36200	LE36200LS		
	LIG	—	—	LE36200LIG		
	LSIG	LX36200G	LXI36200G	LE36200LSG		
225	LI	—	—	LE36225LI	ARP090	
	LSI	LX36225	LXI36225	LE36225LS		
	LIG	—	—	LE36225LIG		
	LSIG	LX36225G	LXI36225G	LE36225LSG		
250	LI	—	—	LE36250LI	ARP100	
	LSI	LX36250	LXI36250	LE36250LS		
	LIG	—	—	LE36250LIG		
	LSIG	LX36250G	LXI36250G	LE36250LSG		
300	LI	—	—	LE36300LI	ARP075	AL600LI5 (2) 4/0 AWG– 500 kcmil Al/Cu
	LSI	LX36300	LXI36300	LE36300LS		
	LIG	—	—	LE36300LIG		
	LSIG	LX36300G	LXI36300G	LE36300LSG		
350	LI	—	—	LE36350LI	ARP088	
	LSI	LX36350	LXI36350	LE36350LS		
	LIG	—	—	LE36350LIG		
	LSIG	LX36350G	LXI36350G	LE36350LSG		
400	LI	—	—	LE36400LI	ARP100	
	LSI	LX36400	LXI36400	LE36400LS		
	LIG	—	—	LE36400LIG		
	LSIG	LX36400G	LXI36400G	LE36400LSG		
450	LI	—	—	LE36450LI	ARP075	
	LSI	LX36450	LXI36450	LE36450LS		
	LIG	—	—	LE36450LIG		
	LSIG	LX36450G	LXI36450G	LE36450LSG		
500	LI	—	—	LE36500LI	ARP083	
	LSI	LX36500	LXI36500	LE36500LS		
	LIG	—	—	LE36500LIG		
	LSIG	LX36500G	LXI36500G	LE36500LSG		
600 *[15]*	LI	—	—	LE36600LI	ARP100	
	LSI	LX36600	LXI36600	LE36600LS		
	LIG	—	—	LE36600LIG		
	LSIG	LX36600G	LXI36600G	LE36600LSG		

Accessories see page 11-30
Optional Lugs see page 3-26
Dimensions see page 3-29

Table 11.28: Interrupting Ratings

Voltage	LX	LE	LXI
240 Vac	100 kA	100 kA	200 kA
480 Vac	65 kA	65 kA	200 kA
600 Vac	35 kA	35 kA	100 kA

[13] Type LX, LXI and LE circuit breakers are NOT recommended for use on single motor branch circuits.
[14] Substitute (A) in place of (G) for ground-fault alarm (pickup indication only). Requires CIM3F and Powerlogic, or see Data Bulletin 0502DB0001. No instantaneous OFF position for LI or LIG trip function type circuit breakers.
[15] 600 A Sensor is 80% rated.

© 2017 Schneider Electric
All Rights Reserved
2/15/2017

PowerPact™ Mission Critical Circuit Breakers

PowerPact D-Frame Mission Critical Circuit Breakers

When the D-frame Mission Critical circuit breaker is used as a main circuit breaker with QO branch circuit breakers, the D-frame MC will remain closed during any fault that occurs downstream of the QO circuit breaker up to 30kA at 208Y/120 Vac.

Ratings:

- UL 489 Listed
- CSA Certified
- Voltage: 208Y/120 V
- Handle ratings: 60–600 A
- AIR: 65 kA

Available Configurations:

- Four sizes: 150 A, 250 A, 400 A, and 600 A
- Main circuit breaker in NQ panelboards
- Unit mount for OEM users
- Plug-in base for OEM users
- Drawout base for OEM users

Table 11.29: D-FrameTermination Options

Frame	Termination Letter	Termination Option
D-Frame	F	No Lugs (Includes terminal nut kit on both ends)
	L	Lugs both ends
	M	Lugs ON end Terminal Nut Kit Off end
	P	Lugs OFF end Terminal Nut Kit On end
	N	Plug-in
	D	Drawout
	S	Rear Connected

For factory-installed termination, place termination letter in the third block of the circuit breaker catalog number.
D G **L** 3 6 4 0 0 E 2 0

Table 11.30: D-Frame Mission Critical Circuit Breakers

Circuit Breaker Cat. No. *[16]*	Continuous Current Rating	Terminal	
		Cat. No.	Wire Range (AWG/kcmil)
DJL32150W	150 A	32508	#2-600 Cu or #2-500 Al
DJL32250W	250 A		
DJL32400W	400 A		
DJL32600W	600 A	32510	(2) 2/0-350 Cu or (2) 2/0-500Al

Accessories see page 11-26
Optional Lugs see page 3-26
Dimensions see page 3-29

LA Mission Critical Circuit Breakers

The LA High Magnetic Withstand MC Circuit Breakers are designed to trip at a higher magnetic trip level (18–20 times handle rating) than typical molded case circuit breakers (MCCBs) (which trip at 5–10 times the handle rating).

The high magnetic withstand value of these LA circuit breakers allow the downstream branch circuit breaker to clear the fault.

LA/LHL MC
For Mission Critical Power Loads
Available in 200, 225, 250, and 400 A
@ 480 Vac

Table 11.31: L-Frame Interrupting Table

	LAL	LHL
240 Vac	42 kA	65 kA
480 Vac	30 kA	35 kA

Accessories see page 11-30
Optional Lugs see page 3-26
Dimensions see page 3-29

Table 11.32: L-Frame—400 A, Thermal-Magnetic, High Magnetic Withstand Circuit Breakers For Mission Critical Loads

Ampere Rating	AC Magnetic Level Factory Set		Circuit Breaker		Terminal	
	Hold	Trip	Standard Interrupting Cat. No.	High Interrupting Cat. No.	Cat. No.	Wire Range
LA/LH MC Circuit Breaker, 3P, 480 Vac						
200 A	3400 A	4000 A	LAL34200MC	LHL34200MC	AL250-LAMC	(1) 250–350 kcmil Al (1) 3/0 AWG–350 kcmil Cu
225 A	3825 A	4500 A	LAL34225MC	LHL34225MC		
250 A	4250 A	5000 A	LAL34250MC	LHL34250MC		
400 A	6000 A	7200 A	LAL34400MC	LHL34400MC	AL400LA	(1) 1 AWG–600 kcmil Al or (2) 1 AWG–250 kcmil Al

[16] D-Frame circuit breakers 400 A and below are 100% rated.

© 2017 Schneider Electric
All Rights Reserved

Automatic Molded Case Switches

NOTE: These automatic molded case switches are in obsolescence. Do not use on new applications. Limited service stock is available for replacement or fill purposes. Contact the nearest sales office for product availability.

Automatic molded case switches open instantaneously at a factory preset magnetic trip point, calibrated to protect only the molded case switch itself, when it is subjected to high fault currents. The trip point is nonadjustable and provides no overload or low level fault protection.

Molded case switches open when the handle is switched to the OFF position or in response to an auxiliary tripping device such as a shunt trip.

Automatic switches will accept the same lugs and accessories as equivalent thermal-magnetic circuit breakers.

Automatic molded case switches are UL Listed per UL 489 and are CSA Certified.

Table 11.33: Automatic Molded Case Switches, 600 Vac

Ampere Rating	2P		3P		Withstand Rating[17][18]				Trip Point (A)[19]		Lug Kit Installed
	Cat. No.	Availability	Cat. No.	Availability	240 Vac	480 Vac	600 Vac	250 Vdc	AC	DC	
100	FHL26000M [20]	—	FHL36000M [20]	—	65k	25k	18k	10k	1500	1725	AL100FA
150	—	—	FHL3600015M [20]	—	65k	25k	18k	—	2500	—	AL150FA
400	LHL26000M	—	LHL36000M	—	65k	35k	25k	10k	8000	9600	AL400LA
250	KHL26000M [20]	**Not Available**	KHL36000M [20]	Not Available	65k	35k	25k	10k	4500	5175	AL250KA
600	MHL260006M	**Not Available**	MHL360006M	—	65k	65k	25k	10k	9000	9900	AL900MA
800	MHL260008M	**Not Available**	MHL360008M	—	65k	65k	25k	10k	9000	9900	AL900MA

D-Frame Switch

Table 11.34: D-Frame Withstand Ratings [21]

Voltage	Interrupting Rating
	J
240 Vac	150 kA
480 Vac	100 kA
600 Vac	25 kA

Accessories see page 11-30
Optional Lugs see page 3-26
Dimensions see page 3-29

Table 11.35: D-Frame (600 Vac) and Q-Frame (240 Vac) PowerPact™ Automatic Molded Case Switches

Circuit Breaker	Poles	Ampere Rating	J Interrupting Rating		Terminal	Wire Range
			Cat. No.	Trip Point		
D-Frame	3	400 A	DJL36000S40	6000 A	S32508	2 AWG–500 kcmil Al or 2 AWG–600 kcmil Cu
		600 A	DJL36000S60	6000 A	S32510	(2) 2/0 AWG–500 kcmil Al or (2) 2/0 AWG–350 kcmil Cu

[17] The withstand rating is the fault current at rated voltage that the molded case switch will withstand without damage when protected by a circuit breaker with an equal continuous current rating.
[18] The short circuit current rating is the fault current, at rated voltage, that the molded case switch will withstand without damage when protected by a circuit breaker with an equal continuous current rating.
[19] UL magnetic trip tolerances are -20% / +30% from the nominal values shown.
[20] FHL and KHL automatic switches will not accept cylinder lock attachments.
[21] The withstand rating is the fault current at rated voltage that the molded case switch will withstand without damage when protected by a circuit breaker with an equal continuous current rating.

© 2017 Schneider Electric
All Rights Reserved

Mag-Gard Motor Circuit Protector

NOTE: These Mag-Gard motor circuit protectors are obsolete. Please refer to Digest Section 7 for PowerPact™ molded case circuit breakers for new installations or replacement.

Instantaneous trip magnetic only circuit breakers have a single adjustment which simultaneously sets the magnetic trip level of each individual pole. Mag-Gard circuit breakers comply with NEC® requirements for providing motor circuit protection when installed as part of a UL Listed combination controller having motor overload protection. Interrupting ratings are established for these UL Recognized Components only when they are used in combination with motor starters with properly sized overload relays and contactors.

Mag-Gard circuit breakers will accept the same lugs and accessories as equivalent thermal-magnetic circuit breakers. Mag-Gard circuit breakers are available with I-Line construction. H-construction Mag-Gard circuit breakers are also available.

Table 11.36: Magnetic Only 3–1200 A 600 Vac, 50/60 Hz

Ampere Rating		Adjustable Trip Range *[22]*	Cat. No. 3P only
KAL	150 A	750–1500 A	KAL3615026M
	250 A	400–800 A	KAL3625021M
		750–1500 A	KAL3625026M
		1000–2000 A	KAL3625030M
		1125–2250 A	KAL3625031M
		1250–2500 A	KAL3625032M
FAL	3 A	8–28 A	FAL3600311M
	7 A	18–70 A	FAL3600712M
	15 A	50–180 A	FAL3601513M
	30 A	50–180 A	FAL3603013M
		100–350	FAL3603015M
	50 A	75–260	FAL3603014M
		150–580 A	FAL3605016M
	100 A	150–580 A	FAL3610016M
		300–1100 A	FAL3610018M

Accessories see page 11-30
Optional Lugs see page 3-26
Dimensions see page 3-29

Adjustable instantaneous-trip circuit breakers are intended for use in combination with motor starters with overload relays for the protection of motor circuits from short circuits. Other specific applications include rectifiers and resistance welders. These circuit breakers contain a magnetic trip element in each pole with the trip point adjustable from the front. Interrupting ratings are determined by testing the instantaneous-trip circuit breakers in combination with a contactor and overload relay.

Select instantaneous-trip circuit breakers as follows:

- Use selection table for motors, other than NEMA Design E, with locked-rotor indicating code letters per NEC Table 430.7 (b) as follows. For other motors order a special thermal-magnetic circuit breaker with magnetic trip settings for the specific motor—specify motor horsepower, voltage, frequency, full-load current and code letter or locked rotor current.

Horsepower	Motor Code Letters
1/2 or less	A–L
3/4 to 1-1/2	A–K
2 to 3	A–J
5 to 25	A–H
30 to 125	A–G
150 or more	A–F

- Determine motor hp rating from the motor nameplate.
- Refer to the table and select an instantaneous-trip circuit breaker with an ampere rating recommended for the hp and voltage involved.
- Select an adjustable trip setting of at least 800%, not to exceed 1300%, of the motor full-load Amperes. (FLA) for other than Design E motors. For Design E motors, select an adjustable trip setting of at least 1100% not to exceed 1700% of FLA.
- The NEC 1300% maximum setting may be inadequate for instantaneous-trip circuit breakers to withstand current surges typical of the magnetization current of autotransformer type reduced voltage starters, or open transition wye-delta starters during transfer from “start” to “run,” constant hp multi-speed motors, and motors labeled “high efficiency.” Select thermal-magnetic circuit breakers from Digest Section 7 for those applications.
- Part-winding motors, per NEC 430.3, should have two circuit breakers selected from the above at not more than one half the allowable trip setting for the horsepower rating. The two circuit breakers should operate simultaneously as a disconnecting means per NEC 430.103.

[22] UL magnetic trip setting tolerances are -20%/+30% from the nominal values shown.

© 2017 Schneider Electric
All Rights Reserved

Table 11.37: Adjustable Instantaneous-Trip Circuit Breakers for Single Motor Circuit Protection

Hp Ratings of Induction Type Squirrel-Cage and Wound Rotor Motors 3Ø 60 Hz ac				Full Load Amperes [23]	Mag-Gard Circuit Breaker Cat. No.	Magnetic Trip Settings [24]	
200 V	230 V	460 V	575 V			MIN	MAX
			1/2	0.8	FAL3600311M [23]	1000%	3500%
		1/2		1	FAL3600311M [23]	800%	2800%
			3/4	1.1	FAL3600311M	700%	2500%
		3/4	1	1.4	FAL3600311M	600%	2000%
		1		1.8	FAL3600311M	400%	1600%
	1/2			2	FAL3600311M	400%	1400%
			1-1/2	2.1	FAL3600311M	400%	1300%
1/2				2.3	FAL3600311M	300%	1200%
		1-1/2		2.6	FAL3600712M	700%	2700%
			2	2.7	FAL3600712M	700%	2600%
	3/4			2.8	FAL3600712M	600%	2500%
3/4				3.2	FAL3600712M	600%	2200%
		2		3.4	FAL3600712M	500%	2100%
	1			3.6	FAL3600712M	500%	1900%
			3	3.9	FAL3600712M	500%	1800%
1				4.1	FAL3600712M	400%	1700%
		3		4.8	FAL3600712M	400%	1500%
	1-1/2			5.2	FAL3600712M	300%	1300%
1-1/2				6	FAL3600712M	300%	1200%
			5	6.1	FAL3600712M	300%	1100%
	2			6.8	FAL3601513M	700%	2600%
		5		7.6	FAL3601513M	700%	2400%
2				7.8	FAL3601513M	600%	2300%
			7-1/2	9	FAL3601513M	600%	2000%
	3			9.6	FAL3601513M	500%	1900%
3		7-1/2	10	11	FAL3601513M	500%	1600%
		10		14	FAL3603015M	700%	2500%
	5			15.2	FAL3603015M	700%	2300%
			15	17	FAL3603015M	600%	2100%
5				17.5	FAL3603015M	600%	2000%
		15		21	FAL3603015M	500%	1700%
	7-1/2		20	22	FAL3605016M	700%	2600%
7-1/2				25.3	FAL3605016M	600%	2300%
		20	25	27	FAL3605016M	600%	2100%
	10			28	FAL3605016M	500%	2100%
			30	32	FAL3605016M	500%	1800%
10				32.2	FAL3605016M	500%	1800%
		25		34	FAL3605016M	400%	1700%
		30		40	FAL3605016M	400%	1500%
			40	41	FAL3610018M	700%	2700%
	15			42	FAL3610018M	700%	2600%
15				48.3	FAL3610018M	600%	2300%
		40	50	52	FAL3610018M	600%	2100%
	20			54	FAL3610018M	600%	2000%
20			60	62	FAL3610018M	500%	1800%
		50		65	FAL3610018M	500%	1700%
	25			68	FAL3610018M	400%	1600%
30				92	KAL3625025M	700%	1400%
	40			104	KAL3625026M	700%	1400%
			150	144	KAL3625030M	700%	1400%
50				150	KAL3625030M	700%	1300%
	60			154	KAL3625031M	700%	1500%
		125		156	KAL3625031M	700%	1400%
60				177.1	KAL3625032M	700%	1400%
		150		180	KAL3625032M	700%	1400%
	75		200	192	KAL3625032M	700%	1300%

[23] Motor full-load currents are taken from NEC Table 430.150. Select wire and circuit breakers on basis of horsepower rather than nameplate full-load current per NEC 430.6 (A) for general motor applications. Do not use these values to select overload relay thermal units. See Digest Section 15 for selection of thermal units when actual full load current is not known. The voltages listed are rated motor voltages. Corresponding nominal system voltages are 200 to 208, 220 to 240, 440 to 480 and 550 to 600 volts.

[24] Only MIN and MAX settings are shown, intermediate settings are available on all circuit breakers.

© 2017 Schneider Electric
All Rights Reserved
2/15/2017

For use on vessels over 65 ft. (19.8 m) in length.

Marine Circuit Breakers

NOTE: These marine circuit breakers are obsolete. Please refer to Digest Section 7 for PowerPact™ molded case circuit breakers for new installations or replacement.

A standard for molded case circuit breakers which are intended to be installed and used aboard a boat or vessel is included in Supplement SA to UL 489, “Standard for Molded Case Circuit Breakers and Circuit Breaker Enclosures’’ (also referred to as UL product category DKTY). This UL Standard was established in accordance with U.S. Coast Guard regulations, applicable American Boat and Yacht Council Inc. publications, and NFPA® 302 “Standard for Motor Craft (Pleasure and Commercial)’’. In order to be UL Listed for marine use, circuit breakers must not use aluminum or aluminum alloys for terminal connections and must be calibrated at an ambient temperature of 40°C. Standard circuit breakers should not be specified or used in place of marine circuit breakers.

The following table lists those circuit breakers which are UL Marine Listed for use on vessels over 65 ft. (19.8 m) in length. (PowerPact H and J-frame circuit breakers can also be used in vessels under 65 ft. [19.8 m] in length.)

Table 11.38: CIrcuit Breakers for Marine Applications

Cat. No. Prefix	Poles	Ampere Rating	Application	Cat. No.
FC, FCL	2, 3	15–100 A	For use only on vessels over 65 feet (19.8 m) in length.	Add the number “9’’ after the catalog number prefix of the standard circuit breaker catalog number. Example: Standard FAL36100 Marine FAL936100
FI, FIL	2, 3	20–100 A		
KI, KIL	2, 3	110–250 A		
KA, KAL	2, 3	70–250 A		
KH, KHL	2, 3	70–250 A		
KC, KCL	2, 3	110–250 A		

© 2017 Schneider Electric
All Rights Reserved

2P QO

2P QOB

2P Q1

Branch Circuit Breakers and Mounting Assemblies for ML Panelboards

NOTE: NQO, NQOB, and NQOD circuit breakers and panelboards are obsolete. Do not use on new applications. Limited service stock is available for replacement or fill purposes. Contact the nearest sales office for product availability.

Replacing Obsolescent Q1 and Q1B Circuit Breakers In NQO, NQOB and NQOD Panelboards

Q1 and Q1B circuit breakers have been replaced by QO and QOB circuit breakers.

Table 1 below is used for replacing 1P, 2P or 3P Q1 and Q1B circuit breakers with QO and QOB branch circuit breakers in NQO, NQOB and NQOD panelboards.

Table 2 below is used for replacing Q1 and Q1B main circuit breakers in NQO and NQOB panelboards.

Table 11.39: Replacing Q1 and Q1B Circuit Breakers with QO and QOB Branch Circuit Breakers

Panelboard Type	Branch Circuit Breaker		Mounting Assembly Required
	Obsolete	Available	
NQOB	Q1B	QOB	SK5668
NQOD	—	QO	SKNQOD225 *[25]*
NQOD	—	QOB	SKNQOD225 *[25]*

Table 11.40: Replacing Q1 and Q1B Main Circuit Breakers in NQO and NQOB Panelboards

Panelboard Type	Main Circuit Breaker		Mounting Assembly Required	Retaining Kit Required
	Obsolete	Available		
NQOB	Q1B	QOB	SK5668	—

Branch Circuit Breakers and Mounting Assemblies for ML Panelboards

Replacement circuit breakers for ML panelboards are determined by the manufacture date of the panel and the panel depth. (See chart below.)

Table 11.41: Replacement Circuit Breakers in ML Panelboards

Manufacture Date	Panel Depth		Availability of Replacement Circuit Breakers
	in.	mm	
1948–1956	8.63	219	No Replacements Available
1958–1961	10.00	254	No Replacements Available
1962–1968	10.63	270	Refer to Tables Below

The tables below are used for replacing or adding circuit breakers to 10-5/8 inch deep ML panelboards manufactured from 1962–1968 and for switchboards manufactured from 1962–1968.

Table 11.42: Adding New Circuit Breakers

Cat. No. Prefix	Ampere Rating	Mounting Assembly Required	Mounting Height		Poles Required	Single or Twin (Mounting Assembly)
			in.	mm		
FAL	15–100 A	SK4515	4.50	114	3P	Twin
KAL	70–250 A	SK4516	4.50	114	3P	Twin
LAL	125–400 A	SK4517	6.00	152	3P	Single
MAL	300–1000 A	SK4578	9.00	229	3P	Single

Table 11.43: Replacement of Existing Circuit Breakers

Existing Circuit Breaker	Ampere Rating	Mounting Height		Cat. No. Prefix	Replacement Circuit Breaker	Mounting Assembly Required	Poles Required	Single or Twin (Mounting Assembly)	Availability
		in.	mm						
ML-1	15–100 A	4.50	114	989 or 999	FAL	SK4515 *[26]*	3P	Twin	—
ML-3	100–225 A	6.00	152	997	KAL	SK4516 *[26]*	3P	Twin	—
LA (W)	225–400	8.25	210	LA	LAL	SK4517	3P	Single	—
MA (W)	125–1000 A	8.25	210	MA	MAL	SK4578	3P	Single	—
FAL	15–100 A	4.50	114	FAL	FAL	No Mounting Assembly Required	3P	Twin	Not Available
KAL	70–250 A	4.50	114	KAL	KAL		3P	Twin	
LAL	125–400 A	6.00	152	LAL	LAL		3P	Single	
MAL	300–1000 A	9.00	229	MAL	MAL		3P	Single	
MAL	125–250 A	9.00	229	MAL	LAL	SK4517	3P	Single	

[25] 225 A maximum. For 400–600 ampere circuit breaker mounting assembly, see Class 1630 Service Bulletin.
[26] Mounting assemblies for twin-mounted circuit breakers will only accept the same family and configuration of circuit breakers, i.e., FAL and FAL.

© 2017 Schneider Electric
All Rights Reserved
2/15/2017

NOTE: These rating plugs are for electronic circuit breakers which are obsolete. Please refer to Digest Section 7 for PowerPact™ circuit breakers for new installations or replacement.

ME Micrologic Circuit Breakers

ME Circuit Breakers Manufactured before Micrologic

PE Micrologic Circuit Breakers

PE Circuit Breakers Manufactured before Micrologic

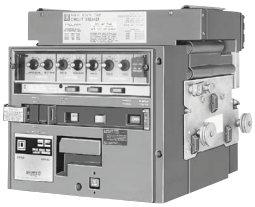

SE Micrologic Circuit Breakers

Rating Plugs for Obsolete Circuit Breakers

Replacement rating plugs for circuit breakers manufactured before Micrologic™.

Table 11.44: Replacement Rating Plugs for Pre-Micrologic Circuit Breakers

Circuit Breakers Manufactured Before Micrologic	Frame Size	Ampere Rating	Cat. No.
ME	225 A	100 A	ME2100
		110 A	ME2110
		125 A	ME2125
		150 A	ME2150
		175 A	ME2175
	400 A	250 A	ME4250
		350 A	ME4350
	800 A	450 A	ME8450
		500 A	ME8500
		700 A	ME8700
PE-G/PEC-G Built before June 1, 1982 and all PE/PEC	1200 A	600 A	PE120600
		700 A	PE120700
		800 A	PE120800
		900 A	PE120900
		1200 A	PE121200
	1600 A	1000 A	PE161000
		1200 A	PE161200
		1400 A	PE161400
	2000 A	1000 A	PE161000
		1200 A	PE161200
		1400 A	PE161400
		1800 A	PE201800
		2000 A	PE202000
PE-G/PEC-G Built after June 1, 1982	1200 A	600 A	PEG120600
		700 A	PEG120700
		800 A	PEG120800
		1000 A	PEG121000
		1200 A	PEG121200
	1600 A	1000 A	PEG161000
		1200 A	PEG161200
		1400 A	PEG161400
	2000 A	1000 A	PEG161000
		1200 A	PEG161200
		1400 A	PEG161400
		1800 A	PEG201800
		2000 A	PEG202000

Table 11.45: Interchangeable Rating Plug Kits for ME, NE, PE and SE Circuit Breakers with Full-Function Micrologic Trip System Manufactured Between December 1989 and September 1992

Old Cat. No.	New Cat. No.	Multiplier Value
RP040	ARP040	0.400
RP050	ARP050	0.500
RP056	ARP056	0.563
RP058	ARP058	0.583
RP060	ARP060	0.600
RP063	ARP063	0.625
RP067	ARP067	0.667
RP070	ARP070	0.700
RP075	ARP075	0.750
RP080	ARP080	0.800
RP083	ARP083	0.833
RP088	ARP088	0.875
RP090	ARP090	0.900
RP100	ARP100	1.000

Table 11.46: Replacement Rating Plugs for Micrologic Circuit Breakers

Circuit Breaker	Frame Size	Ampere Rating	Cat. No. *[27]*
Micrologic ME Series 3	225 A	100 A	ME2100RP
		110 A	ME2110RP
		150 A	ME2150RP
		175 A	ME2175RP
	400 A	250 A	ME4250RP
	800 A	450 A	ME8450RP
		500 A	ME8500RP
		700 A	ME8700RP
Micrologic NE Series 1	1200 A	600 A	NE120600RP
		630 A	NE120630RP
		700 A	NE120700RP
		800 A	NE120800RP
		900 A	NE120900RP
		1000 A	NE121000RP
Micrologic PE Series 4	1200 A	600 A	PE120600RP
		700 A	PE120700RP
		1000 A	PE121000RP
		1200 A	PE121200RP
	1600 A	1000 A	PE161000RP
		1200 A	PE161200RP
	2000 A	1000 A	PE201000RP
		1200 A	PE201200RP
		1400 A	PE201400RP
		1600 A	PE201600RP
		1800 A	PE201800RP
Micrologic SE Series 2	200 A	100 A	S9020100RP
		125 A	S9020125RP
		150 A	S9020150RP
		175 A	S9020175RP
		200 A	S9020200RP
	400 A	200 A	S9040200RP
		250 A	S9040250RP
		300A	S9040300RP
		350 A	S9040350RP
	800 A	450 A	S9080450RP
		500 A	S9080500RP
		700 A	S9080700RP
	1200 A	800 A	S9120800RP
		1000 A	S9121000RP
		1200 A	S9121200RP
	1600 A	1600 A	S9161600RP
	2000 A	2000 A	S9202000RP

[27] Contact the nearest sales office for availability.

© 2017 Schneider Electric
All Rights Reserved

EH/EHB Circuit Breakers

NOTE: EH/EHB circuit breakers are obsolete. Do not use on new applications. Limited service stock is available for replacement or fill purposes. Contact the nearest sales office for product availability.

Table 11.47: E Frame—100 A, Thermal Magnetic (480Y/277 Vac)

Amp Rating	1P 277 Vac—14 kA 120 Vac—65 kA				2P 480Y/277 Vac—14 kA 120/240 Vac—65 kA		3P 480Y/277 Vac—14 kA 240 Vac—65 kA		Wire Size (AWG)		Wire Temp.
	Plug-On		Bolt-On		Bolt-On		Bolt-On				
	Cat. No.	Availability	Cat. No.	Availability	Cat. No.	Availability	Cat. No.	Availability	Al	Cu	
	Requires 1 Space		Requires 1 Space		Requires 2 Spaces		Requires 3 Spaces				
EH/EHB Circuit Breakers											
15 A	Not Available	Not Available	EHB14015 *[28]*	—	EHB24015	—	EHB34015	—	—	(2) 14–10	60/75 °C
	—	—	—	—	—	—	EHB340151042	—	—	(2) 14–10	60/75 °C
	—	—	EHB140151082	—	—	—	EHB340151082	—	—	(2) 14–10	60/75 °C
20 A	Not Available	Not Available	EHB14020 *[28]*	—	Not Available	Not Available	EHB34020	—	—	(2) 14–10	60/75 °C
	—	—	—	—	—	—	EHB340201042	—	—	(2) 14–10	60/75 °C
	—	—	Not Available	Not Available	Not Available	Not Available	EHB340201082	—	—	(2) 14–10	60/75 °C
	—	—	—	—	Not Available	Not Available	EHB340201212	—	—	(2) 14–10	60/75 °C
25 A	Not Available	Not Available	Not Available	Not Available	Not Available	Not Available	Not Available	Not Available	12–8	14–8	60/75 °C
30 A	Not Available	Not Available	Not Available	Not Available	Not Available	Not Available	EHB34030	—	12–8	14–8	60/75 °C
	—	—	EHB140301082	—	EHB240301042	—	EHB340301082	—	12–8	14–8	60/75 °C
	—	—	—	—	EHB240301082	—	EHB340301212	—	12–8	14–8	60/75 °C
	—	—	—	—	—	—	EHB3403035	—	12–8	14–8	60/75 °C
35 A	Not Available	Not Available	Not Available	Not Available	Not Available	Not Available	EHB34035	—	12–2	14–2	75 °C
40 A	Not Available	Not Available	Not Available	Not Available	Not Available	Not Available	Not Available	Not Available	12–2	14–2	75 °C
	—	—	—	—	—	—	Not Available	Not Available	12–2	14–2	75 °C
	—	—	—	—	—	—	EHB340401212	—	12–2	14–2	75 °C
45 A	Not Available	Not Available	Not Available	Not Available	Not Available	Not Available	Not Available	Not Available	12–2	14–2	75 °C
50 A	Not Available	Not Available	Not Available	Not Available	EHB24050	—	Not Available	Not Available	12–2	14–2	75 °C
	—	—	—	—	—	—	EHB340501042	—	12–2	14–2	75 °C
	—	—	—	—	—	—	EHB340501082	—	12–2	14–2	75 °C
	—	—	—	—	—	—	Not Available	Not Available	12–2	14–2	75 °C
60 A	Not Available	Not Available	Not Available	Not Available	EHB24060	—	Not Available	Not Available	12–2	14–2	75 °C
	—	—	—	—	—	—	Not Available	Not Available	12–2	14–2	75 °C
	—	—	—	—	—	—	Not Available	Not Available	12–2	14–2	75 °C
70 A	—	—	—	—	Not Available	Not Available	Not Available	Not Available	4–2/0	4–2/0	75 °C
80 A	—	—	—	—	Not Available	Not Available	Not Available	Not Available	4–2/0	4–2/0	75 °C
90 A	—	—	—	—	Not Available	Not Available	Not Available	Not Available	4–2/0	4–2/0	75 °C
100 A	—	—	—	—	EHB24100 *[29]*	—	Not Available	Not Available	4–2/0	4–2/0	75 °C
100 A	—	—	—	—	EHB24100 1082	—	Not Available	Not Available	4–2/0	4–2/0	75 °C
EH/EHB HID Circuit Breakers — For Use on High Intensity Discharge Lighting Systems											
15 A	Not Available	Not Available	Not Available	Not Available	EHB24015HID	—	Not Available	Not Available	—	(2) 14–10	60/75 °C
20 A	Not Available	Not Available	EHB14020HID *[28]*	—	Not Available	Not Available	EHB34020HID	—	—	(2) 14–10	60/75 °C
25 A	Not Available	Not Available	Not Available	Not Available	Not Available	Not Available	Not Available	Not Available	12–8	14–8	60/75 °C
30 A	Not Available	Not Available	Not Available	Not Available	Not Available	Not Available	EHB34030HID	—	12–8	14–8	60/75 °C

[28] UL Listed as SWD (switching duty) rated.
[29] For use only in Series 3 or Series E1 panelboards. Contact the nearest sales office for use in earlier series panelboards

© 2017 Schneider Electric
All Rights Reserved

FJA Circuit Breakers

NOTE: FJ 3-pole circuit breakers are obsolete. Please refer to Digest Section 7 for PowerPact™ molded case circuit breakers for new installations or replacement.

Table 11.48: Mechanical Lug Kit Information

Circuit Breaker Application				Number of Wires Per Lug and Wire Range	Kit Cat. No.	Lugs Per Kit
Standard	Ampere Rating	Optional	Ampere Rating			
Al Lugs for Use with Al or Cu Wire						
FJ	35–125 A	FJ	15–30 A	(1) 12–2/0 AWG Al or (1) 14–2/0 AWG Cu	AL100FD	3

Table 11.49: Handle Accessories

Circuit Breaker Type	No. of Poles	Cat. No.
Handle Padlock Attachment (locks ON or OFF)		
FJ	1, 2 or 3	HPAFD

© 2017 Schneider Electric
All Rights Reserved

QE Metering Circuit Breakers

NOTE: QE circuit breakers are obsolete. Please refer to Digest for PowerPact™ molded case circuit breakers for new installations or replacement.

Table 11.50: Branch Circuit Breakers

Branch Device			
System Type	Branch Circuit Breaker		
	Ampere Rating	Cat. No.	Availability
1Ø IN – 1Ø OUT or 3Ø IN – 1Ø3W OUT			
200 A Max.	70 A	QE270VH	—
	80 A	QE280VH	—
	90 A	QE290VH	—
	100 A	QE2100VH	—
	125 A	QE2125VH	Not Available
	150 A	QE2150VH	—
	175 A	QE2175VH	Not Available
	200 A	QE2200VH	Not Available
3Ø IN 3Ø OUT			
200 A Max.	70 A	QE370VH	—
	80 A	QE380VH	Not Available
	90 A	QE390VH	Not Available
	100 A	QE3100VH	Not Available
	125 A	QE3125VH	Not Available
	150 A	QE3150VH	Not Available
	175 A	QE3175VH	Not Available
	200 A	QE3200VH	Not Available

© 2017 Schneider Electric
All Rights Reserved
2/15/2017

KDL and KGL
3P Circuit Breaker
100–250 A

KD/KG Circuit Breakers

NOTE: KD and KG circuit breakers are obsolete. Please refer to Digest Section 7 for PowerPact™ molded case circuit breakers for new installations or replacement.

Table 11.51: Handle Accessories

Circuit Breaker Type	Cat. No.	Availability
Handle Padlock Attachment (locks ON or OFF)		
KDL, KGL	HPAKD	Not Available

Table 11.52: Interrupting Ratings (kA)

Circuit Breaker Type	Voltage	Interrupting Rating
KDL	240 V	25 kA

Table 11.53: PowerPact™ K Frame—250 A, Thermal-Magnetic (240 Vac)

Continuous Current Rating @ 40° C	AC Magnetic Trip Settings		D Interrupting Level		G Interrupting Level		Terminal Wire Range
	Hold	Trip	Cat. No.	Availability	Cat. No.	Availability	
2P, 240 Vac							
100 A	1100 A	1700 A	KDL22100	Not Available	KGL22100	Not Available	AL250KD 6 AWG–350 kcmil Al or Cu
110 A	1100 A	1700 A	KDL22110	Not Available	KGL22110	Not Available	
125 A	1100 A	1700 A	KDL22125	Not Available	KGL22125	Not Available	
150 A	1100 A	1700 A	KDL22150	Not Available	KGL22150	Not Available	
175 A	1400 A	2400 A	KDL22175	Not Available	KGL22175	Not Available	
200 A	1400 A	2400 A	KDL22200	Not Available	KGL22200	Not Available	
225 A	1400 A	2400 A	KDL22225	Not Available	KGL22225	Not Available	
250 A	1400 A	2400 A	KDL22250	Not Available	KGL22250	Not Available	
3P, 240 Vac							
100 A	1100 A	1700 A	KDL32100	—	KGL32100	Not Available	AL250KD 6 AWG–350 kcmil Al or Cu
110 A	1100 A	1700 A	KDL32110	Not Available	KGL32110	Not Available	
125 A	1100 A	1700 A	KDL32125	—	KGL32125	Not Available	
150 A	1100 A	1700 A	KDL22150	—	KGL32150	Not Available	
175 A	1400 A	2400 A	KDL22150	Not Available	KGL32175	Not Available	
200 A	1400 A	2400 A	KDL32200	Not Available	KGL32200	Not Available	
225 A	1400 A	2400 A	KDL32225	—	KGL32225	Not Available	
250 A	1400 A	2400 A	KDL32250	Not Available	KGL32250	Not Available	

Table 11.54: Mechanical Lug Kit Information

Kit Catalog Number	Circuit Breaker Application				Number of Wires Per Lug and Wire Range	Torque	Lugs Per Kit	Availability
	Standard	Ampere Rating	Optional	Ampere Rating				
Al Lugs for Use with Al or Cu Wire								
AL250KD	KDL, KGL	100–250 A	—	—	(1) 6 AWG–350 kcmil	300 lb-in (34 N•m)	3	Not Available
Cu Lugs for Use with Cu Wire Only								
CU250KD	—	—	KDL, KGL	100–250	(1) 6 AWG–350 kcmil	300 lb-in (34 N•m)	3	—

© 2017 Schneider Electric
All Rights Reserved

NHL Circuit Breakers

NOTE: NHL circuit breakers and related accessory products are obsolete. Please refer to Digest Section 7 for PowerPact™ molded case circuit breakers for new installations or replacement.

NHL Circuit Breaker
800–1200 A

Table 11.55: NHL Circuit Breaker (1200 A, 480 Vac)

Ampere Rating	AC Magnetic Trip Settings Amperes		Cat. No.		Standard Lug Kit Wire Range
	Low	High	2P	3P	
800 A	4000 A	8000 A	—	NHF368001021	AL1200NA (4) 350–750-kcmil
1000 A	5000 A	10000 A	—	NHF3610001021	
1200 A	5000 A	10000 A	—	NHF361200	
1200 A	5000 A	10000 A	—	NHF3612001021	
800 A	4000 A	8000 A	—	NHL36800	
1000 A	5000 A	10000 A	NHL261000	NHL361000	
1000 A	5000 A	10000 A	—	NHL3610001021	
1200 A	5000 A	10000 A	NHL261200	NHL361200	
1200 A	5000 A	10000 A	—	NHL3612001021	

Kit Cat. No.	Circuit Breaker	Ampere Rating	Number of Wires Per Lug and Wire Range *[30]*	Lugs Per Kit
AL1200NA	NH	600–1200	(4) 350–750 kcmil	1

Kit Cat. No.	Circuit Breaker	Number of Lugs Per Terminal and Wire Range *[30]*	Lugs Per Kit
VC1200NA5	NH	(1) 2/0 AWG–500 kcmil	1
VC1200NA7	NH	(1) 500–750 kcmil Al or 500 kcmil Cu	1

Cat. No.	Circuit Breaker	Description	No. of Poles
HPANA *[31]*	NH	Handle Padlock Attachment	2, 3
NAHEX	NH	Handle Extension	2, 3

Cat. No.	Standard Package Quantity
AL1200NAT	1

[30] Unless otherwise specified, wire sizes apply to both aluminum and copper conductors.
[31] Use with NAHEX handle extension.

© 2017 Schneider Electric
All Rights Reserved
2/15/2017

M-Frame Thermal-Magnetic Circuit Breakers

NOTE: M-frame thermal-magnetic circuit breakers are obsolete. Please refer to Digest for PowerPact™ molded case circuit breakers for new installations or replacement.

Table 11.56: M-Frame—Thermal-Magnetic, Individually-Mounted Circuit Breakers, 600 Vac

Ampere Rating	AC Magnetic Trip Settings [1]		Standard Interrupting		High Interrupting		Terminal Wire Range
	Low	High	Cat. No.	Availability	Cat. No.	Availability	
2P, 600 Vac, 250 Vdc							
300 A	1500 A	3000 A	MAL26300	Not Available	MHL26300	Not Available	AL900MA (3) 3/0 AWG–500 kcmil
350 A	1750 A	3500 A	MAL26350	Not Available	MHL26350	Not Available	
400 A	2000 A	4000 A	MAL26400	Not Available	MHL26400	Not Available	
450 A	2250 A	4500 A	MAL26450	Not Available	MHL26450	Not Available	
500 A	2500 A	5000 A	MAL26500	Not Available	MHL26500	—	
600 A	3000 A	6000 A	MAL26600	Not Available	MHL26600	Not Available	
700 A	3500 A	7000 A	MAL26700	Not Available	MHL26700	—	
800 A	4000 A	8000 A	MAL26800	Not Available	MHL26800	Not Available	
900 A	4500 A	9000 A	MAL26900	Not Available	MHL26900	Not Available	
1000 A	5000 A	10000 A	MAL261000	Not Available	MHL261000	Not Available	
1200 A	5000 A	10000 A	MAL261200	Not Available	MHL261200	Not Available	AL1000MA [2] (4) 1/0 AWG–350 kcmil
3P, 600 Vac, 250 Vdc							
300 A	1500 A	3000 A	MAL36300	Not Available	MHL36300	Not Available	AL900MA (3) 3/0 AWG–500 kcmil
350 A	1750 A	3500 A	MAL36350	Not Available	MHL36350	Not Available	
400 A	2000 A	4000 A	MAL36400	Not Available	MHL36400	—	
450 A	2250 A	4500 A	MAL36450	Not Available	MHL36450	Not Available	
500 A	2500 A	5000 A	MAL36500	Not Available	MHL36500	—	
600 A	3000 A	6000 A	MAL36600	Not Available	MHL36600	—	
700 A	3500 A	7000 A	MAL36700	Not Available	MHL36700	—	
800 A	4000 A	8000 A	MAL36800	Not Available	MHL36800	—	
900 A	4500 A	9000 A	MAL36900	Not Available	MHL36900	Not Available	
1000 A	5000 A	10000 A	MAL361000	Not Available	MHL361000	Not Available	
1200 A	5000 A	10000 A	MAL361200	Not Available	MHL361200	Not Available	AL1000MA [2] (4) 1/0 AWG–350 kcmil

Table 11.57: M-Frame—Thermal-Magnetic, I-Line™ Construction Circuit Breakers, 600 Vac

Ampere Rating	AC Magnetic Trip Settings [1]		Standard Interrupting		High Interrupting		Terminal Wire Range
	Low	High	Cat. No.	Availability	Cat. No.	Availability	
2P, 600 Vac, 250 Vdc [3]							
300 A	1500 A	3000 A	MA26300( )	Not Available	MH26300( )	Not Available	AL900MA (3) 3/0 AWG–500 kcmil
350 A	1750 A	3500 A	MA26350( )	Not Available	MH26350( )	Not Available	
400 A	2000 A	4000 A	MA26400( )	Not Available	MH26400( )	Not Available	
450 A	2250 A	4500 A	MA26450( )	Not Available	MH26450( )	Not Available	
500 A	2500 A	5000 A	MA26500( )	Not Available	MH26500( )	Not Available	
600 A	3000 A	6000 A	MA26600( )	Not Available	MH26600( )	Not Available	
700 A	3500 A	7000 A	MA26700( )	Not Available	MH26700( )	Not Available	
800 A	4000 A	8000 A	MA26800( )	Not Available	MH26800( )	Not Available	
3P, 600 Vac, 250 Vdc							
300 A	1500 A	3000 A	MA36300	Not Available	MH36300	Not Available	AL900MA (3) 3/0 AWG–500 kcmil
350 A	1750 A	3500 A	MA36350	Not Available	MH36350	Not Available	
400 A	2000 A	4000 A	MA36400	Not Available	MH36400	—	
450 A	2250 A	4500 A	MA36450	Not Available	MH36450	Not Available	
500 A	2500 A	5000 A	MA36500	—	MH36500	—	
600 A	3000 A	6000 A	MA36600	Not Available	MH36600	Not Available	
700 A	3500 A	7000 A	MA36700	—	MH36700	—	
800 A	4000 A	8000 A	MA36800	—	MH36800	Not Available	

Table 11.58: Interrupting Ratings

Voltage	MA/MAL	MH/MHL
240 Vac	42 kA	65 kA
480 Vac	30 kA	65 kA
600 Vac	22 kA	25 kA

Accessories see page 11-30
Optional Lugs see page 3-26
Dimensions see page 3-29
Enclosures: see Digest Section 7

Table 11.59: Phase Options

Phase Option Letter	2P	3P
AB AC BC	MA26800AB MA26800AC MA26800BC	—
ABC CBA	—	MA36800 MA36800CBA

[1] UL magnetic trip setting tolerances are ±25% for low and ±20% for high from nominal values shown.
[2] The AL100MA lug is the only lug available for the 1200 A MA and MH circuit breakers.
[3] 2P circuit breaker catalog numbers are completed by adding required phase connection letters as suffix to catalog numbers. See Phase Options table.

© 2017 Schneider Electric
All Rights Reserved

D-Frame Electrical Accessories

Table 11.60: D-Frame Electrical Accessories

Accessory	Description		Rated Voltage		D-Frame Factory-Installed Cat. Suffix	D-Frame Field-Installable Cat. No.
Auxiliary and Alarm Switches (OF, SD, SDE) G-Frame	Provides circuit breaker contact status. **Note:** The location of the accessory in the circuit breaker determines its function.	Standard Min Load = 10mA with 24 V	1 auxiliary switch (OF) 1a1b		AA	S29450
			2 auxiliary switch (OF) 2a2b		AB	2x S29450
			3 auxiliary switch (OF) 3a3b		AC	3x S29450
			Alarm Switch (SD) 1a1b		AD	S29450
			Overcurrent trip switch (SDE) 1a1b		BD	S29450
			Alarm switch and Overcurrent trip switch		BE	2x S29450
		Low Level Min Load = 1mA with 24 V	One auxiliary switch (OF) 1a1b		AE	S29452
			Two auxiliary switches (OF) 2a2b		AF	2x S29452
			3 auxiliary switches (OF) 3a3b		AG	3x S29452
			Alarm Switch (SD) 1a1b		BH	S29452
			Overcurrent trip switch (SDE) 1a1b		BJ	S29452
			Alarm switch and Overcurrent trip switch		BK	2x S29452
Shunt Trip (MX) G-Frame	Trips the circuit breaker from a remote location by means of a trip coil energized from a separate supply voltage circuit.		AC	24	SK	S29384
				48	SL	S29385
				110/130	SA	S29386
				208/277	SD	S29387
				380/480	SH	S29388
				525/600	SJ	S29389
			DC	12	SN	S29382
				24	SO	S29390
				30	SU	S29391
				48	SP	S29392
				60	SV	S29393
				125	SR	S29393
				250	SS	S29394
Undervoltage Trip G-Frame	Instantaneously opens the circuit breaker when the under-voltage trip supply voltage drops to a value between 35% and 70% of its rated voltage. Closing is allowed when the supply voltage of the undervoltage trip reaches 85% of rated voltage.		AC	24	UK	S29404
				48	UL	S29405
				110/130	UA	S29406
				208/277	UD	S29407
				380/480	UH	S29408
				525/600	UJ	S29409
			DC	12	UN	S29402
				24	UO	S29410
				30	UU	S29411
				48	UP	S29412
				60	UV	S29403
				125	UR	S29413
				250	US	S29414

© 2017 Schneider Electric
All Rights Reserved
2/15/2017

PowerPact D-Frame Miscellaneous Accessories

Table 11.61: Bus Bar Connections Hardware for D-Frame Circuit Breakers

Frame	Description	Term. No.	Poles	Cat. No.
D-Frame	Set of 3 terminal screws and washers for one side	F	3	36966
	Set of 4 terminal screws and washers for one side		4	36967

Table 11.62: Terminal Shields and Phase Barriers

Used With	Description				Dimension B (in.)	Cat. No.	Qty Per Kit
D-Frame	Terminal Shield (3P)	PDC5DG2 PDC12DG2	—	—		36965	1

Table 11.63: Miscellaneous D-Frame Circuit Breaker Accessories

Accessory	Description	Field-Installed Cat. No.
External Neutral Sensor	150 A Neutral Sensor	36950
	250 A Neutral Sensor	36951
	400 A Neutral Sensor	36952
	600 A Neutral Sensor	36953
Spare Parts	100 Identification Labels	29314
Test Kits	Mini test kit (battery not included)	43362
	Portable test kit	55391

Table 11.64: Motor Operators for D-Frame Circuit Breakers

Description	Rated Voltage		Factory Installed Cat. No. Suffix	Field-Installed Cat. No,
Standard motor for electrically-operated circuit breakers	AC	48/60	ML	32839
		110/130	MA	32840
		208/277	MD	22841
		220/240	MC	—
		380/415	MF	32842
		380/485	MH	—
		440/480	MH	32847
	DC	24/30	MO	32843
		48/60	MP	32844
		110/130	MR	32845
		250	MS	32846
Locking Device	Mounting Hardware		—	32649
	Ronis lock		—	41940
	Profalux lock		—	42888
Operations Counter			—	32648

Mini Test Kit

Portable Test Kit

Motor Operator

© 2017 Schneider Electric
All Rights Reserved
2/15/2017

Locks, Installation Accessories, and Rear Connections

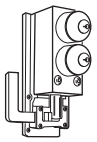

Key Locking

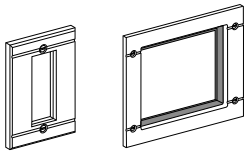

Door Escutcheon

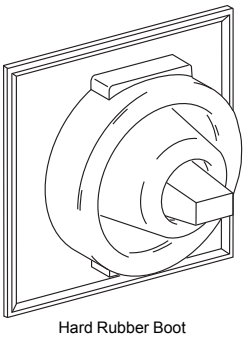

Hard Rubber Boot

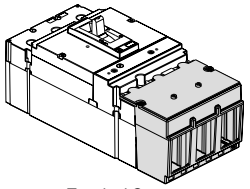

Terminal Covers

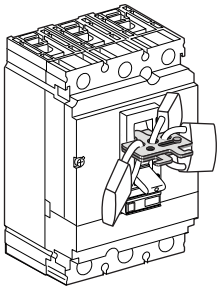

Removable Padlock Attachment

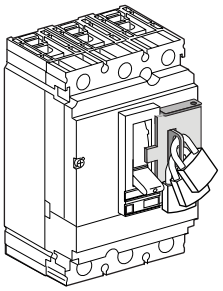

Fixed Padlock Attachment

Table 11.65: Locks, Interlocking

Device	Description	D-Frame Field-Installable Cat. No.
Handle Padlocking Device	Removable (lock OFF only)	S29370
	Fixed (lock OFF or ON)	S32631
	Fixed (lock OFF only)	NJPAF
Interlocking (Not UL listed)	Mechanical for circuit breakers with rotary handles	32621
	Mechanical for circuit breakers with toggles	32614
Key Locking	Ronis	41950
	Profalux	42878

Provision and 2 locks keyed alike

Table 11.66: Installation Accessories for G- and D-Frame Circuit Breakers

Description	D-Frame Field-Installable Cat. No.
Front Panel Escutcheon for Toggle Breakers	32556
Front Panel Escutcheon for Rotary Handle, Motor Operator, or extended escutcheon	32558
Phase Barriers (set of 6)	32570
Handle Rubber Boot	32560
Sealing Accessories	29375
DIN rail adapter	—
Toggle Extensions (set of 10)	32553

Table 11.67: Rear Connections

Device		D-Frame		
		Poles	Factory-Installed Termination No.	Field-Installed Cat. No.
Mixed Rear Connection Kit		3	S	32477
		4	S	32478
Consisting of:	Short rear connections (set of 2)	3	—	2x 32475
	Long rear connections (set of 2)	3	—	32476
	Short terminal cover (3P)	3	—	32562

© 2017 Schneider Electric
All Rights Reserved
2/15/2017

Neutral Current Transformers and Micrologic Series B Trip Unit Accessories

Table 11.68: Neutral Current Transformers

Cat. No.	Sensor	Where Used
LE25CT2	250 A	LXL, LEL, LXIL
LE4CT2	400 A	
LE6CT2	600 A	

Table 11.69: Electronic Trip Indicator and Current Meter Field-installable Kits

Device	Cat. No.	Included With Circuit Breaker	Optional
Local Trip Indicator Kit	ALTI	—	LXL, LXIL
Local Current Meter Kit/Trip Indicator	ALAM	LEL	LXL, LXIL

Table 11.70: Interchangeable Rating Plug Kits for all Circuit Breakers with Micrologic Series B Trip System

Cat. No.	Sensor Multiplier Value
ARP040	0.400
ARP050	0.500
ARP056	0.563
ARP058	0.583
ARP060	0.600
ARP063	0.625
ARP067	0.667
ARP070	0.700
ARP075	0.750
ARP080	0.800
ARP083	0.833
ARP088	0.875
ARP090	0.900
ARP100	1.000

Combination Load Current Meter and Trip Indicator

Electronic Trip Unit wit Seals Installed to Restrict Access

Complying with the NEC®

The National Electrical Code, Section 240–6(c) exception allows conductro ampere ratings equal to the selected long-time pickup setting. Square D offers the seals below to restric access to the trip unit once settings are selected.

Table 11.71: Trip Unit Seals

Description	Cat. No.	Package Quantity
Trip Unit Seal	TUSEAL	100

Table 11.72: Communication Adapter

Description	Cat. No.
Communication Adapter	CIM3F *[1]*

CIM3F Communication Adapter

Table 11.73: Test Equipment for Circuit Breakers with Micrologic Series B Trip Systems

Description	Cat. No.
Universal Test Set (includes test module for Full-function and Standard-function LEL, LXL, LXIL)	UTS3
Test Module for Full-function and Standard-function LEL, LXL, LXIL. (For use with existing CBTU1 or UTS3 test set.)	CBTMB
Replacement ribbon cable and rating plug adapter for CBTMB	CBTMBRK
Long-time and ground-fault Memory Reset Module (Series B Electronics)	MTMB

Universal Test Set

[1] Required for Micrologic to communicate with PowerLogic™ system.

© 2017 Schneider Electric
All Rights Reserved

Auxiliary Switch Contact Configuration

Color Code:
"A" Contact - Yellow Leads
"B" Contact - Blue Leads
Common-Striped Leads

1A/1B

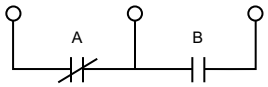

Circuit Breaker Closed

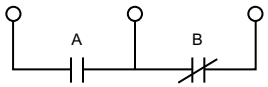

Circuit Breaker Open or Tripped

1A Alarm Switch Configuration

Color Code: Red Leads

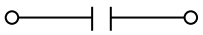

Circuit Breaker Open or Closed

Circuit Breaker Tripped

1B Alarm Switch Configuration

Color Code: Red Leads

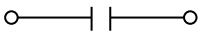

Circuit Breaker Tripped

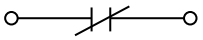

Circuit Breaker Open or Closed

Undervoltage Trip Wiring Diagram

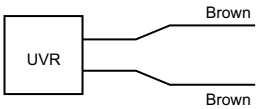

Brown Wires To Be Connected To Control Power

Shunt Trip Wiring Diagram

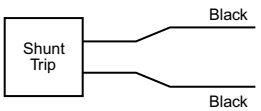

Black Wires To Be Connected To Control Power

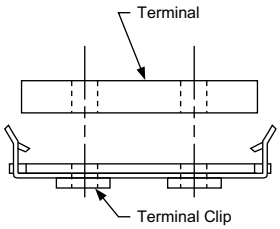

LC, LI, LE, LX and LXI Circuit Breakers

Field-Installable Electrical Accessories

Complete field-installable accessory catalog number by inserting suffix from Digest Section 7 between the parentheses in the catalog numbers shown in the table below. (Example: LA11212)

Table 11.74: Field-Installable Accessories for Thermal-Magnetic and Electronic Trip Circuit Breakers

Circuit Breaker	Shunt Trip	Ground-Fault Shunt Trip *[2]*	Undervoltage Trip	Auxiliary Switches	Alarm Switch
FI, KI	Factory-Installed Only	Factory-Installed Only	Factory-Installed Only	Factory-Installed Only	Factory-Installed Only
LC, LE	LC1( )	LC1G	LC1 ( )	LC1( )	Factory-Installed Only
LI, LX, LXI	LC1( )	LC1G	LC1 ( )	LC1( )	Factory-Installed Only
MA, MH Series 2	MA1( )	MA1G	MA1 ( )	MA1( )	Factory-Installed Only Center Pole
ME, MX	Factory-Installed Only	Factory-Installed Only	Factory-Installed Only	Factory-Installed Only	Factory-Installed Only
NA, NC, NE, NX Series 1, 2, 3	NA1( )	NA1( )	NA1( )	NA1( )	NA1( )
PA, PH, PC Series 4	PA1( )	Factory-Installed Only	PA11121	PA1( )	Factory-Installed Only
PE, PX Series 4, 5, 6	PA1( )	Factory-Installed Only	PA11121	PA1( )	Factory-Installed Only

Table 11.75: Accessory Mounting Locations

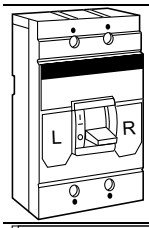

MA, MH Series 2 circuit breakers or newer = Field-installable accessories
ME/MX circuit breakers = Not field-installable accessories

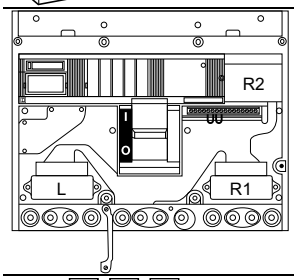

NA, NC, NE, NX circuit breakers - FIeld-installable accessories
"L" port and "R" port will accept shunt trips, alarm switches and UVRs;
"R2" port will accept auxiliary switches. Maximum of one device per port.

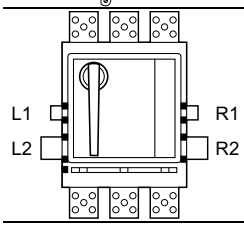

PA, PH, PC, PE, PX Series 4 circuit breakers or newer = FIield-installable accessories.
"L1" and "L2" or "R1" and "R2" port combinations are required to mount a single shunt trip. Both "L2" and "R2" ports will accept a UVR. Both "L1" and R1" ports will accept auxiliary switches. If alarm switch is factory installed in PA or PC circuit breaker, it will be installed in "R2" port. For a PE or PX circuit breaker, the alarm switch will be factory installed in "L2" port.

LC, LI, LE, LX and LXI Circuit Breaker Termination Clip Kit

The standard lugs supplied with LC, LI, LE, LX and LXI circuit breakers are secured by means of a screw fastened through the circuit breaker terminal into the lug body. If the standard lug is removed and a bolted connection to the circuit breaker terminal is desired, the AL600IN threaded terminal clip kit is required to make this connection. The AL600IN clip snaps onto the bottom of the terminal. For ordering information, see chart below.

Table 11.76: Termination Clip Kit

Kit Cat. No.	Clips Per Kit	Circuit Breakers
AL600IN	3	LC, LI, LE, LX, LXI

[2] Used with obsolete GP Ground-Censor™ system or add-on ground-fault modules.

© 2017 Schneider Electric
All Rights Reserved
2/15/2017

KAMO2120AC
with KIL Circut Breaker

FAMO1 and FAMOP
with FAL Circuit Breaker

Electrical Operators

Provides remote ON, OFF/RESET control of molded case circuit breakers.

- A complete line of field-installable electrical operators.
- Not applicable on LC/LI/LE/LX/LXI circuit breakers.
- Installing side mounted motor operators on non I-Line™ circuit breakers requires the use of a separate mounting pan.
- Side mounted electrical operators require an additional 4-1/2 in. (114 mm) of mounting space in I-Line installations.

When remote indication of circuit breaker status is required, order circuit breaker with 1A-1B auxilliary switch for ON-OFF Indication and alarm switch for TRIP Indication. Electrical operators require SPDT maintained contact switch. Refer to Class 9001 control unit listing for operators and pilot lights.

NOTE: Not available on Mag-Gard™ circuit breakers and molded case switches.

Table 11.77: Electrical Operators

Circuit Breaker Prefix	Top Mount		Side Mount		Mounting Pan Cat. No.
	Voltage	Cat. No.	Voltage	Cat. No.	
FI, KI	—	—	120 Vac	KAMO1	—
FIL, KIL	120 Vac	KAMO2120AC	120 Vac	KAMO1	KAMOP
	240 Vac	KAMO2240AC			
	24 Vdc	KAMO224DC			
	125 Vdc	KAMO2125DC			

Handle Accessories

Table 11.78: Handle Accessories

Circuit Breaker Prefix	Poles	Cat. No.
Handle Tie		
2 FI, 2 KI, or 1 FI + 1 KI	2, 3	FKHT
California Title 24 Comb. Handle Tie and Lock Off Handle Extension		
LE, LI, LX, LXI	2, 3	AHEXLI
Handle Padlock Attachment (locks ON or OFF)		
FI	1, 2, 3	HPAFK
KI	2, 3	HPAFKF *[3]*
LC, LE, LI, LX, LXI	2, 3	AHPALI

[3] Locks OFF only.

© 2017 Schneider Electric
All Rights Reserved

AL250KI

AL900MA

AL800MA7

AL1000MA

AL2500PA

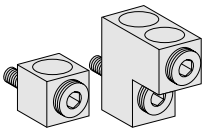
D-Frame Lugs

Table 11.79: Terminal Shields and Phase Barriers

Used With	Description		Cat. No.	Qty Per Kit
D-Frame	Terminal Shield (3P)	PDC5DG2 PDC12DG2	36965	1

Mechanical Lugs

Table 11.80: Mechanical Lug Kit Information

Circuit Breaker Application				(Number of Wires Per Lug) Wire Range[4]	Cat. No.	Lugs Per Kit	Availa-bility
Stand-ard	Ampere Rating	Optional	Ampere Rating				
Al Lugs for Use with Al or Cu Wire							
FI	15–30 A	FI	35–100 A	(1) 14–4 AWG Cu or (1) 12–4 AWG Al	AL50FA	3	—
FI	35–100 A	FI	15–30 A	(1) 14–1/0 AWG Cu or (1) 12–1/0 AWG Al	AL100FA	3	—
KI	110–175 A	—	—	(1) 4 AWG–350 kcmil	AL250KA	3	—
KI	200–250 A	KI	110–175 A	(1) 1/0 AWG–350 kcmil	AL250KI	3	—
LE, LX, LXI	100–250 A	LI, LE, LX, LXI	300–600 A	(2) 1 AWG–350 kcmil	AL600LI35	1	—
LI, LE, LX, LXI	300–600 A	LE, LX, LXI	100–250 A	(2) 4/0 AWG–500 kcmil	AL600LI5	1	—
—	—	LC, LI, LE, LX, LXI	—	(1) 500–750 kcmil	AL600LI7	1	—
—	—	LC, LI, LE, LX, LXI	—	(1) 500–750 kcmil	AL600LI7	1	—
MA, MH	300–1000 A	—	—	(3) 3/0 AWG–500 kcmil	AL900MA	1	—
—	—	MA, MH	300–1000 A	(2) 500–750 kcmil	AL800MA7	1	—
—	—	MA, MH	300–1200 A	(4) 1/0 AWG–350 kcmil	AL1000MA	1	—
ME, MX	100–250 A	—	—	(1) 6 AWG–350 kcmil	AL250ME	3	Not Available
—	—	ME, MX	250–400 A	(1) 350–750 kcmil	AL400ME7	1	Not Available
—	—	ME, MX	100–800 A	(2) 500–750 kcmil	AL800MA7	1	—
ME, MX	300–800 A	ME, MX	100–250 A	(3) 3/0 AWG–500 kcmil	AL900MA	1	—
—	—	ME, MX	300–1200 A	(4) 1/0 AWG–350 kcmil	AL1000MA	1	—
NA, NC, NE, NX	600–1200 A	—	—	(4) 3/0 AWG–600 kcmil	AL1200NE6	1	Not Available
—	—	PAF, PHF, PEF, PXF, PCF	600–2500 A	(1) 1/0 AWG–750 kcmil	AL2500PA	2	—
Cu Lugs for Use with Cu Wire Only [5]							
—	—	FI	15–100 A	(1) 14–1 AWG Cu	CU100FA	3	—
—	—	FI	15–100 A	(1) 14–1 AWG Cu	CU100FA	3	—
—	—	KI	110–250 A	(1) 4 AWG–250 kcmil Cu	CU250KA	3	—
—	—	LI, LE, LX, LXI	—	(2) 1 AWG–350 kcmil Cu	CU600LI35	1	—
—	—	LI, LE, LX, LXI	—	(2) .4/0 AWG–500 kcmil Cu	CU600LI5	1	—
—	—	LI, LE, LX, LXI	—	(1) 500–750 kcmil Cu	CU600LI7	1	—
—	—	MA, MH	300–1000 A	(3) 3/0 AWG–500 kcmil Cu	CU1000MA	1	—
—	—	ME, MX	125–250 A	(1) 4 AWG–250 kcmil Cu	CU250ME	3	Not Available
—	—	ME, MX	100–800 A	(3) 3/0 AWG–500 kcmil Cu	CU1000MA	1	—
—	—	NA, NC, NE, NX	600–1200 A	(4) 3/0 AWG–600 kcmil Cu	CU1200NE6	1	Not Available

Table 11.81: Mechanical Lug Kits for D-Frame Circuit Breakers

Description	Poles	Cat. No.	
		400 A Lugs	600 A Lugs
Field-Installable Lug Kit, Terminal Cover Included	3	32508	32510
Voltage Takeoffs (set of two)		29348	29348
Wire Range		(1) 2 AWG-600 kcmil stranded CU cable (1) 2 AWG-500 kcmil stranded AL cable	(2) 2/0 AWG-350 kcmil stranded CU cable (2) 2/0 AWG-500 kcmil stranded AL cable

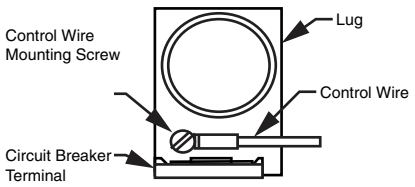

Control Wire Tap Lugs

Control wire tap lugs are used in applications requiring connection to a small wire (22-14 AWG) for control circuits. This is accomplished by crimping the wire to a standard wire crimp terminal (not included) and fastening the terminal to the circuit breaker lug.
Note: To order as a factory-installed device on FI, KI, LC, LI, LXI, LX or LC circuit breakers, add suffix number 8041 to circuit breaker catalog number, e.g., KIL362258041.

Table 11.82: Control Wire Terminations for Circuit Breakers

Circuit Breaker	Control Wire Termination Kits	
	Cat. No.	Standard Package Quantity
FI	FAT [6]	1
KI	AL250KIT	1
LC, LI, LXI, LX, LE	AL600LI35T	1
	AL600LI5T	1

[4] Unless otherwise specified, wire sizes apply to both aluminum and copper conductors.
[5] Use suffix 8002 for factory-installed Cu lugs.
[6] Use fully-insulated 0.250 inch slip-on connectors.

© 2017 Schneider Electric
All Rights Reserved
2/15/2017

Compression Lug Kits

Table 11.83: Field-installable Compression Lug Kits

Circuit Breaker Type	Wire Range [7]	Dimension A (In)	Max. Lugs Per Terminal	Cat. No. [8]	Lugs Per Kit	Availabil-ity
Aluminum Compression Lug Kits						
D-Frame	—	—	—	—	—	—
FI	8–1/0 AWG	1.3	1	VC100FA	3	—
KI	4 AWG–300 kcmil	1.5	1	VC250KA3	3	—
	250–350 kcmil	1.5	1	VC250KA35	3	—
LI, LE, LX, LXI[9]	4 AWG–300 kcmil	1.05	2	VC600LI3	2	—
	2/0 AWG–500 kcmil	3.20	2	VC600LI5	2	—
	500–750 kcmil	3.45	1	VC600LI7	1	—
MA, MH	2/0 AWG–500 kcmil	1.9	2	VC600MA5	2	Not Available
	500–750 kcmil	2.1	2	VC800MA7	2	Not Available
ME2, MX2	4 AWG–300 kcmil	1.5	1	VC250ME3	3	Not Available
	250–350 kcmil	1.5	1	VC250ME35	3	Not Available
ME4, MX4	2/0 AWG–500 kcmil	2.2	1	VC400ME5	1	Not Available
	500–750 kcmil Al or 500 kcmil Cu	2.5	1	VC400ME7	1	Not Available
ME, MX, MA, MH	2/0 AWG–500 kcmil	1.9	2	VC600MA5	2	Not Available
	500–750 kcmil Al or 500 kcmil Cu	2.1	2	VC800MA7	2	Not Available
NA, NC, NE, NX	2/0 AWG–500 kcmil	3.3	4	VC1200NE5	4	Not Available
	500–750 kcmil Al or 500 kcmil Cu	3.6	4	VC1200NE7	4	Not Available
PAF, PHF, PCF, PEF	2/0 AWG–500 kcmil	[10]	6–8	VC2000PA5	4	Not Available
	2/0 AWG–500 kcmil	[10]	6–8	VC2500PA7	4	Not Available
Copper Compression Lug Kits						
FI	6–1/0 AWG Cu	1.4	1	CVC100FA	3	—
KI	2/0 AWG–300 kcmil Cu	1.5	1	CVC250KA3	3	—
LI, LE, LX, LXI [9]	250–500 kcmil Cu	3.20	2	CVC600LI5	2	—
ME4, MX4	250–500 kcmil Cu	2.6	1	CVC400ME5	1	Not Available
ME, MX	250–500 kcmil Cu	2.4	2	CVC600MA5	2	Not Available
NA, NC, NE, NX	250–500 kcmil Cu	3.3	4	CVC1200NE5	4	Not Available
	500–750 kcmil Cu	3.6	4	CVC1200NE7	4	Not Available

Power Distribution Connectors (PDC) for Circuit Breakers—for Field Replacement of Mechanical Lugs

Can be used for multiple load connections on one circuit breaker. Use in place of standard distribution blocks to save space and time.

Field-installable kits, including tin-plated aluminum connectors and all necessary mounting hardware are available for Square D FA, LA and Q4-frame molded case circuit breakers.

Connectors are UL Listed:

- For use on load end of circuit breaker only
- For use in UL508 Industrial Control applications only
- For use in UL 1995/CSA C22.2 No. 236 heating and cooling equipment
- For copper wire only

Table 11.84: Power Distribution Connectors for D-Frame Circuit Breakers

Use with Circuit Breaker Type	Circuit Breaker Ampere Rating	Wires Per Terminal & Wire Range	Dimension A (in.)	Cat. No.	Quantity Per Kit
DG, DJ, DL	150–600	(3) 14–2 AWG and (2) 14–2/0 AWG	1.28 [11]	PDC5DG20	3
	150–600	(12) 14–4 AWG	1.31 [11]	PDC12DG4	3

Table 11.85: Power Distribution Connectors for M- and P-Frame Circuit Breakers

Use With Circuit Breaker[12]	Cicuit Breaker Ampere Rating	Wires Per Terminal & Wire Range [13] Cu	Cat. No.	Lug Quantity Per Kit	Dimension A (in.)	Availability
MAL, MHL, MEL, MXL	125–1000 A	(6) 12–2/0 AWG Cu	PDC6MA20	1	0.0	Not Available
		(12) 14–4 AWG Cu	PDC12MA4	1	0.0	

[7] Unless otherwise specified, wire sizes apply to both aluminum and copper conductors.
[8] See instruction bulletins for recommended tools.
[9] These lug kits cannot be used on I-Line™ circuit breakers.
[10] All P-frame circuit breakers require terminal pads for mounting lugs of any type.
[11] Kit includes long terminal shield, which adds 1.65 inches to standard lug with short terminal shield.
[12] Not for use with I-Line circuit breakers.
[13] When using fine stranded wire, increased cross sectional area may cause maximum wire size to be reduced.

© 2017 Schneider Electric
All Rights Reserved

Test Information

NOTE: Listed below are the catalog numbers and the components required for testing the entire family of Micrologic trip systems. The listing includes obsolete series trip systems.

Identified by a label on the front of the trip unit:
LE/LX/LXI, ME/MX, NE/NX and PE/PX circuit breaker 9/92 to present
SE circuit breaker 10/92 to present

This is the latest series of standard (LX/LXI, MX, NX and PX) and full-function (LE, ME, NE, PE and SE) Micrologic trip systems.

Table 11.86: Universal Test Set

Description	Cat. No.
Universal Test Set includes the following: 1. Self-test module (CBTMT) 2. Standard and full-function Micrologic Series B module (CBTMB) includes rating plug adapter 3. Power cord 4. Ribbon cable for making the connection from the test set to the rating plug adapter 5. Instruction manual	UTS3
For those customers who already own the Universal Test Set and want to test the latest standard and full-function (Series B) trip systems, all that is needed is the Micrologic Series B module (CBTMB). Included is the rating plug adapter and instruction manual.	CBTMB
Replacement ribbon cable and rating plug adapter for CBTMB	CBTMBRK
Long-time and ground-fault memory reset module (Series B Electronics)	MTMB

Identified by two rows of rotary switches
(ME/MX, NE/NX and PE/PX circuit breakers 11/89 to 9/92)
(SE circuit breakers 5/90 to 10/92)

For those customers who already own the Universal Test Set (CBTU1 or UTS3) and want to test these earlier series Micrologic trip systems, see the following chart.

Table 11.87: Micrologic Series 3 and Series A Circuit Breaker Test Module

Circuit Breaker Test Module	Cat. No.
Includes rating plug adapter and instruction manual	CBTM4A
Replacement ribbon cable and rating plug adapter for CBTM4A	CBTM4RK

Identified by only one row of rotary switches

Micrologic Series 2 Test Modules are obsolete and no longer available.

Table 11.88: Micrologic Series 2 Circuit Breaker Test Module

Circuit Breaker Test Modules	Cat. No.	Availability
Replacement ribbon cable and rating plug for CBTM1	CBTM1A	**Not Available**
ME, PE (4/85-11/89) CBTM2 obsolete, no longer available	CBTM2	**Not Available**
ME, NE, PE (10/86-11/89) includes rating plug adapter and instruction manual	CBTM3	**Not Available**
Replacement ribbon cable and rating plug for CBTM3	CBTM3A	**Not Available**

Table 11.89: Micrologic Series 1 Trip Systems for Circuit Breakers Manufactured Before Micrologic

Trip System	Test Set
ME/PE (8/78-4/85) Identified by slide type switches instead of rotary switches. The very first series ME and PE electronic trip circuit breakers offered by Square D.	**Test Set Not Available**

NOTE: For trip systems of this type that require testing, contact Technical Services toll free at 1-800-634-2003.

Table 11.90: Neutral Current Transformers

Cat. No.	Availability	Sensor	Where Used
ME25CT2	Not Available	250 A	MXL,MEL
ME4CT2	Not Available	400 A	
ME8CT2	Not Available	800 A	
NE12CT2	—	1200 A	NXL,NEL
PE12CT2	Not Available	1200 A	PXF, PEF
PE16CT2	Not Available	1600 A	
PE20CT2	Not Available	2000 A	
PE12CT2	Not Available	2500 A	

© 2017 Schneider Electric
All Rights Reserved
2/15/2017

GFM250

GFM Ground Fault Module

The Micrologic ground-fault module (GFM) is a UL Listed circuit breaker accessory for equipment protection. It is a combination ground-fault relay and ground-fault sensing device.

Micrologic Add-On Ground-Fault Module features:

- Used in combination with the FA, KA, FC, KC, FI, and KI type circuit breakers with a ground-fault shunt trip factory installed (add the suffix "G" to the circuit breaker)
- Adjustable ground-fault pickup levels
- Adjustable ground-fault time delays
- Integral ground fault push-to-test feature and ground-fault indicator
- All GFMs supplied for I-Line™ mounting, easily convertible to unit mount by removing the I-Line brackets
- Neutral current transformer is supplied for 3-phase 4-wire applications. Refer to instructions for proper installation
- Zone-selective interlocking capability is standard with upstream Micrologic trip system circuit breakers. The GFM can also be zone interlocked with the GC ground-fault system by using a restraint interface module. See page 11-35.
- 120 Vac control power is required for integral test feature. Meets NEC 230-95(c)

NOTE: Ground-fault modules cannot be reverse fed.

Table 11.91: Module/Enclosure Selection Chart

Companion Circuit Breaker Prefix	Cat. No.	Enclosure Space Required		Ground-Fault Pickup Adjustment Range	Availability
		I-Line Switchboard	Individual Enclosure *[1]*		
FAL, FHL, FCL, FA, FH, FC	GFM100FA	LA	KA	20–100 A	—
FI	GFM100FI	LA	—	20–100 A	Not Available
KAL, KHL, KI, KA, KH, KC	GFM250	LA	LA	40–200 A	—

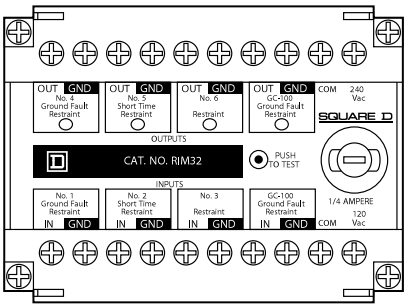

RIM32

Table 11.92: RIM32

Cat. No.
RIM32

RIM32 Restraint Interface Module

The RIM32 Restraint Interface Module is used to interface the restraint signals between various Square D Micrologic™ circuit breakers, Micrologic ground-fault modules, and GC-100 ground-fault protection systems.

The restraint interface module operates on either 120 or 240 Vac, 50/60 Hz. The module is protected by a 1/4 A fuse.

Allowable ZSI combinations are shown in the table below. (Series numbers for current design circuit breakers end in B, for example NE Series 3B.) For double-ended or larger systems, or systems which contain devices from different columns in the table below, contact your local Sales Office for combination information.

If more inputs or outputs are needed, another restraint interface module is necessary. Contact your local Sales Office for information on multiple module installations.

NOTE: The maximum distance between devices is 1000 ft. (305 m).

Table 11.93: ZSI Combination (Where All Inputs Driven are Same Columns)

Circuit Breaker Series Outputs	Circuit Breaker Series Inputs							
	SE 2 (Ground Fault)	SE 2 (Short Time)	ME 3, NE 1, PE 4	ME 4 & 5, NE 2 & 3, P 5 & 6A, SE 3A	ME 5A, NE 3A, PE 6A, SE 3A	LE 1B, ME 5B, NE 3B, PE 6B, SE 3B	GC100	Rim32
SE 2 (Ground Fault)	50	—	R	R	R	R	R	50
SE 2 (Short Time)	—	1	R	R	R	R	R	50
ME 3, NE 1, PE 4	50	R	15	2	13	47	R	50
ME 4, 5 & 5A, NE 2, 3 & 3A, PE 5, 6 & 6A, SE 3 & 3A	50	R	R	1	1	7	R	14
LE 1B, ME 5B, NE 3B, PE 6B, SE 3B	50	R	10	1	R	26	R	44
GC100	R	R	R	R	R	R	7	50
GFM *[2]*	50	—	2	1	1	5	R	1
RIM32	50	6	50	7	37	50	15	50

# = Maximum inputs without RIM32. Self-restraint counts as one input.
R =RIM32(s) required to restrain any device.
— = Invalid combination.

[1] Use NEMA 1 or 3R enclosures only.
[2] GFM is an output device only.

© 2017 Schneider Electric
All Rights Reserved

To order

NOTE: Masterpact M/MP/MC circuit breakers and related accessories are obsolete. Use Masterpact NT/NW for new applications. See Digest Section 7. Limited service stock is available for replacement or fill purposes. Contact the nearest sales office for product availability.

To order a complete circuit breaker, order:

- Circuit breaker fixed or drawout frame..... order from table below.
  or circuit breaker without cradle.....order from table below.
- Connections.....page 11-40
- Control unit.....page 11-37
- Rating plug.....page 11-37
- Accessories.....page 11-38

Fixed and drawout circuit breakers listed below are complete with the STR58U Trip Unit which includes long time, short time, instantaneous and ground fault as well as options T (residual) and I (ammeter).

Table 11.94: UL Listed Masterpact MP High Interrupting (H2) Circuit Breaker Frame

		Rating	AIR 480 V	Fixed 3P	Drawout without Cradle 3P	Cradle Only 3P
MP16 to MP30— UL 489/NEMA AB1 Standards	MP16H2	1600 A	100 kA	MP100135	MP100136	MP100141
	MP20H2	2000 A	100 kA	MP100137	MP100138	MP100133
	MP30H2	3000 A	100 kA	MP100139	MP100140	MP100132

- Additional information: Catalog **0631CT9501**, Data Sheet **0631HO9701**

© 2017 Schneider Electric
All Rights Reserved
2/15/2017

Masterpact™ M/MP/MC Circuit Breaker Control Units

NOTE: Masterpact M/MP/MC circuit breakers and related accessories are obsolete. Use Masterpact NT/NW for new applications. See Digest Section 7. Limited service stock is available for replacement or fill purposes. Contact the nearest sales office for product availability.

Table 11.95: Control Units

	Control Unit	Ground-Fault Protection *[1]*	Without Ground-Fault Protection *[1]*
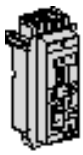	STR 58U (long-time, short-time and instantaneous protection)		
	STR58U (long-time = 0.4x1 sensor rating)	Includes Residual Type T — and Ammeter — I	
		External neutral sensor (TCE) *[2]*– see page 11-38	
		M1008H2	M1008H2NG
		M10H2	M10H2NG
		M1612H2	M1612H2NG
		M16H2	M16H2NG
		M20H2	M20H2NG
		M25H2	M25H2NG
		M3230H2	M3230H2NG
		M32H2	M32H2NG
		M6340H2	M6340H2NG
		M6350H2	M6350H2NG
		M63H2	M63H2NG

Table 11.96: Rating Plug (RL)

Sensor Rating	Plug Rating	Cat. No.
250 A	150 A	54732
	200 A	54733
	250 A	54734
400 A	200 A	54735
	250 A	54736
	300 A	54737
	400 A	54738
600 A	300 A	54739
	400 A	54740
	500 A	54741
	600 A	54742
800 A	400 A	54743
	500 A	54744
	600 A	54745
	800 A	54746
1200 A	600 A	54747
	800 A	54748
	1200 A	54750
2500 A	1200 A	54759
5000 A	3000 A	54772
	4000 A	54773
	5000 A	54774

NOTE: Mandatory for UL Listed Masterpact MP circuit breakers with STR 28D, STR 38S and STR 58U control units. Not required on IEC Rated Masterpact circuit breakers.

[1] External neutral sensor not included.
[2] External AD module (see page 11-38) is required if load is below 20% or if setting is red zone.

© 2017 Schneider Electric
All Rights Reserved

Masterpact™ M/MP/MC Circuit Breaker Accessories

NOTE: Masterpact M/MP/MC circuit breakers and related accessories are obsolete. Use Masterpact NT/NW for new applications. See Digest Section 7. Limited service stock is available for replacement or fill purposes. Contact the nearest sales office for product availability.

Table 11.97: Neutral Sensor for 3ØH4W Systems (TCE)

	Rating	Cat. No.
	800 A	54422
	1250 A	54426
	2000 A	54427

Table 11.98: Accessories (Must be ordered as separate items)

	Accessory	Description	Cat. No.
Power Supply Module (AD)		Input voltage	
	For STR 18M to STR 58U control units **Output voltage:** 24 Vdc	24/30 Vdc	54440
		48/60 Vdc	54441
		10 Vac 50/60 Hz	54443
		220 Vac 50/60 Hz	54444
		380 Vac 50/60 Hz	54446
Battery Module (BAT)			
	Battery back-up power supply for AD module		54446

Table 11.99: Accessories for Cradle

	Accessory	Cat. No.
Position Switches		
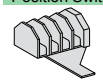	Four SPDT connected position switches (CE)	54590
	Two SPDT disconnected position switches (CD)	54591
Door Escutcheon		
	Can be used with fixed or drawout circuit breakers	54594

© 2017 Schneider Electric
All Rights Reserved
2/15/2017

Frame Accessories

NOTE: Masterpact M/MP/MC circuit breakers and related accessories are obsolete. Use Masterpact NT/NW for new applications. See Digest Section 7. Limited service stock is available for replacement or fill purposes. Contact the nearest sales office for product availability.

Table 11.100: Accessories for Circuit Breaker Frame

		Volts (V)	Cat. No. (XF)	Cat. No. (MX)
Closing Coil (XF)/Shunt Trip (MX) (Maximum 2 shunt trips or 1 shunt trip + 1 undervoltage trip)				
	AC 50/60 Hz	110/127	54449	54449
		220/250	54503	54503
		277 *[3]*	54504	54504
	DC	24	54495	54495
		48	54497	54497
		100/110 *[3]*	54449	54449
		200/220 *[3]*	54503	54503
		250	54504 *[3]*	54504
Undervoltage Trip (MN)				
	AC 50/60 Hz	440/480	—	54481
	DC	24	—	54470
		100/110 *[3]*	—	54474
		200/220*[3]*	—	54478
Time Delayed Undervoltage Trip (MNR) – Not UL Listed				
	AC 50/60 Hz	110/127	—	54486
		220/250	—	54488
Spring Charging Motor (MCH) — Includes Spring Charged Switch				
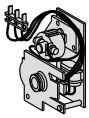	AC 50/60 Hz	100/127	—	54512
		200/240	—	54513
		480 *[3]*	—	54518
	DC	48/60	—	54511
Four Auxiliary Switches (OF)				
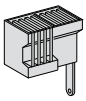	Two Standard (2a+2b) Auxiliary Switches		—	Standard
	Four changeovers (SPDT)		—	54525
One Ready to Close Switch (PF)				
	One ready to close switch		—	54528
One Overcurrent Trip Switch (SDE)				
	Not available on switch version		—	Standard
"OFF" Position Lock by Key Lock				
	Provision for KIRK key lock		VKA	54536
	Ronis (1 key lock) with provision		VSRA1	54533

[3] Not UL Listed.

© 2017 Schneider Electric
All Rights Reserved
2/15/2017

Masterpact™ M/MP/MC Circuit Breaker Spare Parts

NOTE: Masterpact M/MP/MC circuit breakers and related accessories are obsolete. Use Masterpact NT/NW for new applications. See Digest Section 7. Limited service stock is available for replacement or fill purposes. Contact the nearest sales office for product availability.

Table 11.101: Spare Parts

Spare Parts			Cat. No.
Clusters for Cradle (Set of 2)			
	MP25–MP30 3P	M20–M25L 3P	54063 (3)
	MP25–MP30 4P	M20–M25L 4P	54063 (4)
	—	M32H 3P	54063 (3)
	—	M32H 4P	54063 (4)
	MP40–MP50 3P	M50H 3P	54063 (6)
	—	M50H 4P	54063 (7)
Charging Handle			
	One piece		685713
Racking Handle			
	One piece		685631
Vertical UL 489—UL 1066 Connectors			
	MP25–MP30 3P (set of three top or bottom connectors)		54107 (2)

© 2017 Schneider Electric
All Rights Reserved
2/15/2017

Section 12

Obsolete Motor Control Centers

Model 4 12-2

Branch Feeder Units 12-2
Circuit Breaker Type Combination Starters 12-3
Fusible Switch Combination Starter Units 12-4

Series 5600 12-5

General Information 12-5
Branch Feeder and Circuit Breaker Type Combination Starter Units 12-6

© 2017 Schneider Electric
All Rights Reserved

Overview

This section covers Model 4 Motor Control Center (MCC) unit availability during product obsolescence. All Model 4 orders can be completely defined by catalog type and modifications. Layout sheets and data sheets are not required for order entry.

Note the standard features of the unit. Please refer to footnotes for important information.

Model 4 structures are no longer available. Transition sections can be provided to match an existing Model 4 MCC to a Model 6 MCC.

Model 4 to Model 6 Transition

Provides transition from a Model 4 to a Model 6 MCC. The transition requires a 12-inch extension on the first section of the Model 6 lineup. The transition section must be ordered with at least one Model 6 section and cannot ship separately. **The Model 6 bus must be of equal or greater ampacity than the Model 4 bus.**The transition section includes all required splice bars. (Reference the Model 6 Motor Control Center Pricing Guide.)

Please supply original Model 4 factory order number, basic configuration, and Model 4 bus amperage, material, and plating at time of order.

Compatible structure depths include:

- 15-inch deep Model 6 to 14-inch deep Model 4
- 20-inch deep Model 6 to 20-inch deep Model 4

Branch Feeder Units and Modifications

Table 12.1: Circuit Breaker Branch Feeder Units *[1]*

No. of Poles	Trip Rating	Breaker Frame Type	Unit Type No.	Space Factor
3	15	FH	BW423	1
	20		BW424	
	30		BW425	
	40		BW429	
	50		BW428	
	60	FH	BW426	
	70		BW450	
	80		BW451	
	90		BW452	
	100		BW427	

Table 12.2: Dual Mounted Units

No. of Poles	Trip Rating	Breaker Frame Type	Unit Type No.	Space Factor
3	15/15	FH/FH	BW453	1-1/2
	20/20		BW454	
	30/30		BW455	
	50/50		BW456	
	60/60	FH/FH	BW457	
	100/100		BW458	

Table 12.3: Miscellaneous Items

Unit	Description
K401*[2]*	1/2 S.F. Blank Plate
K402*[2]*	1 S.F. Blank Plate
K404*[2]*	2 S.F. Blank Plate

Table 12.4: Fusible Switch Branch Feeder Units—3-pole *[3]*

Voltage	Max. Fuse Size	Unit Type No.	Space Factor
250	30	KW408	1
	60	KX409	1
	100	KY409	1
	200	KZ409	2-1/2
600	30	KW409	1
	60	KX410	1
	100	KY410	1
	200	KZ410	2-1/2

NOTE: Fusible branch feeders 30-200 amp using Class H fuse clips have a short circuit rating of 10,000 AIR @ 600 V. If Class R fuse clips are required, order field installabe kit from Digest.

Table 12.5: Starter Unit Options

Description	Form No.
Start-Stop PB with 1 Pilot light — Red (On)*[4]*	AP
Forward-Reverse-Stop PB with 2 Pilot Lights*[5]*	A1PP
High-Low-Stop PB with 2 Pilot Lights *[6]*	A2PP
Hand-Off-Auto SS with 1 Pilot Light — Red (On)*[4]*	CP
1 Pilot Light only — Red (On)*[4]*	P
2 Pilot Lights — Red (On)*[5]*	PP

Table 12.6: Miscellaneous Units

MT Units (Undrilled Panel and Hinged Door)		
Unit Type No.	Space Factors	Panel Dimensions*[7]*
MT414	1	11-3/4 in. H x 13-5/8 in. W
MT415	2	22-1/3 in. H x 13-5/8 in. W

[1] All branch circuit breakers are thermal magnetic with high interrupting Form Y532.
[2] Unit support pan included.
[3] Fuses not included.
[4] Full Voltage Non-Reversing units only.
[5] Reversing units only.
[6] Two-Speed units only.
[7] Dimensions are in inches — Depth from door to panel is 7.50 inches.

© 2017 Schneider Electric
All Rights Reserved
2/15/2017

1B Wiring and 1 N.O. and 1 N.C. Auxiliary Interlock (Standard)

Table 12.7: Full Voltage Non-Reversing

Maximum Horsepower At				NEMA Starter Size	C/B Amp	Unit Type No.	Space Factor	No. of Thermal Units Required[8]
208 V	240 V	480 V	600 V					
1/4–1/3	1/3	1	1/4–1	1	3	EC403	1	3
1/2–1	1	3	1-1/2–3		7	EC404		
1-1/2–3	3	7-1/2	5–10		15	EC405		
5	7-1/2	10	—		30	EC406		
1-1/2–3	3	7-1/2	5–10	1	15	EC409	1-1/2[9]	3
5	7-1/2	10	—		30	EC410		
5	7-1/2	15	15–20	2	30	ED402	1	3
7-1/2–10	10	25	25		50	ED403		
—	15	—	—		100	ED404		
5	7-1/2	15	15–20	2	30	ED405	1-1/2[9]	3
7-1/2–10	10	25	25		50	ED406		
—	15	—	—		100	ED407		
10	10	25	25–30	3	50	EE404	1-1/2	3
15–25	30	50	40–50		100	EE405		
30	40	—	—	4	225	EF406	2	3
40	—	75	100		225	EF407		
—	50	100	—		225	EF408		

Table 12.8: Full Voltage Reversing

Maximum Horsepower At				NEMA Starter Size	C/B Amp	Unit Type No.	Space Factor	No. of Thermal Units Required[8]
208 V	240 V	480 V	600 V					
1/4–1/3	1/3	1	1/4–1	1	3	FC408	1-1/2	3
1/2–1	1	3	1-1/2–3		7	FC409		
1-1/2–3	3	7-1/2	5–10		15	FC410		
5	7-1/2	10	—		30	FC411		
5	7-1/2	15	15–20	2	30	FD402	2	3
7-1/2–10	10	25	25		50	FD403		
—	15	—	—		100	FD404		

Table 12.9: Two-Speed, Constant Hp, Full Voltage Non-Reversing

Maximum Horsepower At				NEMA Starter Size	C/B Amp	One Winding (Consequent Pole)		Two Winding (Separate Winding)		No. of Thermal Units Required [8]
208 V	240 V	480 V	600 V			Unit Type No.	Space Factor	Unit Type No.	Space Factor	
—	—	1/2	1/4–3/4	1	3	HC415	2	HC419	2	6
1/4–3/4	3/4	2	1–2		7	HC416		HC420		
1–2	2	5	3–5		15	HC417		HC421		
3–5	5	7-1/2	7-1/2		30	HC418		HC422		
—	—	10	10–15	2	30	HC411	2	HD413	2	6
7-1/2	10	20	20		50	HC412		HD414		

Table 12.10: Two-Speed, Constant or Variable Torque, Full Voltage Non-Reversing

Maximum Horsepower At				NEMA Starter Size	C/B Amp	One Winding (Consequent Pole)		Two Winding (Separate Winding)		No. of Thermal Units Required [8]
208 V	240 V	480 V	600 V			Unit Type No.	Space Factor	Unit Type No.	Space Factor	
1/4–1/3	1/3	1	1/4–1	1	3	HC407	2	HC411	2	6
1/2–1	1	3	1-1/2–3		7	HC408		HC412		
1-1/2–3	3	7-1/2	5–10		15	HC409		HC413		
5	7-1/2	10	—		30	HC410		HC414		
5	7-1/2	15	15–20	2	30	HD405	2	HD408	2	6
7-1/2–10	10	25	25		50	HD406		HD409		
—	15	—	—		100	HD407		HD410		

NOTE: Units are wired for 480 V unless 240 V is stated on order. The 480 V control circuit transformer is reconnectable for 240 V. For 240 V and 480 V, form FT is used. For other voltages, form SY74 must be used.

To get NEMA 12, add form N12 to unit.

Mag-Gard™ circuit breaker combination starter units through Size 4 are UL Listed for 22,000 AIR @ 600 V.

[8] Melting alloy overload relay included; thermal units must be ordered separately.
[9] Includes extra 1/2 space factor (additional space only).

© 2017 Schneider Electric
All Rights Reserved

1B Wiring and 1 N.O. and 1 N.C. Auxiliary Interlock (Standard)

Table 12.11: Full Voltage Non-Reversing

Maximum Horsepower At				NEMA Starter Size	Switch Amp Rating	Unit Type No.	Space Factor	No. of Thermal Units Required[10]
208 V	240 V	480 V	600 V					
5	5	—	—	1	30	NC413	1	3
—	—	10	10		30	NC414		
7-1/2	7-1/2	—	—		60	NC415		
7-1/2	7-1/2	—	—	1	60	NC416	1-1/2[11]	3
—	—	10	10		30	NC417		
10	15	—	—	2	60	ND411	1	3
—	—	25	25		60	ND412		
10	15	—	—	2	60	ND413	1-1/2[11]	3
—	—	25	25		60	ND414		
20	25	—	—	3	100	NE416	1-1/2	3
25	30	—	—		200	NE417	3	
—	—	50	50		100	NE418	1-1/2	
40	50	—	—	4	200	NF409	3-1/2	3
—	—	100	100		200	NF410		

Table 12.12: Full Voltage Reversing

Maximum Horsepower At				NEMA Starter Size	Switch Ampere Rating	Unit Type No.	Space Factor	No. of Thermal Units Required[10]
208 V	240 V	480 V	600 V					
5	5	—	—	1	30	OC417	1-1/2	3
7-1/2	7-1/2	—	—		60	OC418		
—	—	10	10		30	OC419		
10	10	—	—	2	60	OD409	2	3
—	—	25	25		60	OD410		

Table 12.13: Two-Speed, Constant Hp, Full Voltage Non-Reversing

Maximum Horsepower At				NEMA Starter Size	Switch Amp Rating	One Winding (Consequent Pole)		Two Winding (Separate Winding)		No. of Thermal Units Required [10]
208 V	240 V	480 V	600 V			Unit Type No.	Space Factor	Unit Type No.	Space Factor	
5	5	—	—	1	30	QC447	2	QC450	2	6
5	5	—	—		60	QC448		QC450		
—	—	7-1/2	7-1/2		30	QC449		QC452		
7-1/2	10	—	—	2	60	QD437	2	QD439	2	6
—	—	20	20		60	QD438		QD440		

Table 12.14: Two-Speed, Constant or Variable Torque, Full Voltage Non-Reversing

Maximum Horsepower At				NEMA Starter Size	Switch Amp Rating	One Winding (Consequent Pole)		Two Winding (Separate Winding)		No. of Thermal Units Required [10]
208 V	240 V	480 V	600 V			Unit Type No.	Space Factor	Unit Type No.	Space Factor	
7-1/2	7-1/2	—	—	1	30	QC441	2	QC444	2	6
7-1/2	7-1/2	—	—		60	QC442		QC445		
—	—	10	10		30	QC443		QC446		
10	15	—	—	2	60	QD433	2	QD435	2	6
—	—	25	25		60	QD434		QD436		

NOTE: Units are wired for 480 V unless 240 V is stated on order. The 480 V control circuit transformer is reconnectable for 240 V. For 240 V and 480 V, form FT is used. For other voltages, form SY74 must be used.

Refer to catalog to get NEMA 12, add form N12 to unit.

Fusible starters Sizes 1–3 using Class H fuse clips have a short circuit rating of 5,000 AIR @ 600 V. Size 4 starters using Class H are rated 10 kAIR @ 600 V. If Class R fuse clips are required, order field installable kit from Digest. Fuses are not included.

[10] Melting alloy overload relay included; thermal units must be ordered separately.
[11] Includes extra 1/2 space factor (additional space only).

© 2017 Schneider Electric
All Rights Reserved
2/15/2017

This section covers Series 5600 Motor Control Center availability during product obsolescence. All Series 5600 orders can be completely defined by price, catalog type, and modifications. Layout sheets and data sheets are not required for order entry.

All unit prices are shown as NEMA 1. Note the standard features of the unit. Please refer to footnotes for important information.

Notes:

1. All units are circuit breaker type.
2. All starter units use Square D™ brand Type S starters and contactors.

Telemecanique™ Series 5600 History

The Series 5600 MCC was in production for more than 20 years. In 1970 it was first sold under the ITE Circuit Breaker/ITE Imperial name. In 1976 ITE Imperial merged with Gould Inc. The MCC was then sold with the Gould ITE name and later the Gould name. In 1985 the Industrial Controls Division of Gould Inc. was sold to Telemecanique Inc., and the MCC was renamed the Telemecanique Series 5600 MCC. Telemecanique, Inc., was acquired by Groupe Schneider in 1988, and in 1991 Square D Company was purchased by Groupe Schneider.

Transition Sections From Telemecanique Series 5600 To Square D™ Brand Model 6

Provides transition from Telemecanique Series 5600 MCC to Square D™ brand Model 6 MCC. The transition requires an extension on the first section of the Model 6 lineup. The transition section must be ordered with at least one Model 6 section, and cannot ship separately. **The ampacity of the Model 6 bus will be equal to or greater than that of the Series 5600 bus**. 20 in. deep Model 6 can be spliced to 20 in. deep Series 5600. 15 in. deep Model 6 can be spliced to 15 in. deep Series 5600. 20 in. deep Model 6 can be spliced to 20 in. deep back-to-back Series 5600 (units mounted both front and back), with front only unit mounting on the Model 6 section(s). The transition section includes all required splice bars. (Reference Model 6 Motor Control Center Pricing Guide.)

NOTE: Not Available In NEMA Type 3R Construction.

The Model 6 to Series 5600 transition section is available in two basic configurations:

1. Model 6 on right spliced to Series 5600 on left
2. Model 6 on left spliced to Series 5600 on right

The following information must be provided when ordering a Model 6 to Series 5600 transition section:

1. Basic configuration (Model 6 Right/Series 5600 Left or Model 6 Left/Series 5600 Right)
2. Series 5600 bus amperage, material, plating, and dimensions
3. Model 6 bus amperage, material, and plating
4. Original Series 5600 factory order number

Please contact your local Schneider Electric sales office for price and availability of transition sections.

© 2017 Schneider Electric
All Rights Reserved

Notes:

1. On starter units, the last digits of the unit catalog number represent the horsepower.
2. All units are NEMA 1 enclosure.
3. All units include a control power transformer and are wired for 120 V control.
4. All starter units are rated for 100 k AIR at 480 V.
5. All starter units are supplied with 1B wiring, 1 N.O. auxiliary interlock, and 1 N.C. auxiliary interlock.

Table 12.15: Full Voltage Non-Reversing Starters

Unit Catalog No.				NEMA Size	C/B Amps	Space Factor
208 V	240 V	480 V	600 V			
1TA.33	2TA.33	TA1	6TA1	1	3	1
1TA1	2TA1	TA3	6TA3		7	
1TA3	2TA3	TA7.5	6TA10		15	
1TA5	2TA7.5	TA10	—		30	
1TA10	2TA10	TA25	6TA25	2	50	1
1TA25	2TA30	TA50	6TA50	3	100	2

Table 12.16: Full Voltage Reversing Starters

Unit Catalog No.				NEMA Size	C/B Amps	Space Factor
208 V	240 V	480 V	600 V			
1TC.33	2TC.33	TC1	6TC1	1	3	1.5
1TC1	2TC1	TC3	6TC3		7	
1TC3	2TC3	TC7.5	6TC7.5		15	
1TC5	2TC7.5	TC10	6TC10		30	
1TC10	2TC10	TC25	6TC25	2	50	1.5

Table 12.17: 2 Speed 1 Winding Starters

Constant Hp				Constant or Variable Torque						
Unit Catalog No.				Unit Catalog No.				NEMA Size	C/B Amps	Space Factor
208 V	240 V	480 V	600 V	208 V	240 V	480 V	600 V			
—	—	TH.5	6TH.75	1TE.33	2TE.33	TE1	6TE1	1	3	2
1TH.75	2TH.75	TH2	6TH2	1TE1	2TE1	TE3	6TE3		7	
1TH2	2TH2	TH5	6TH5	1TE3	2TE3	TE7.5	6TE7.5		15	
1TH5	2TH5	TH7.5	6TH7.5	1TE5	2TE7.5	TE10	6TE10		30	
1TH7.5	2TH10	TH20	6TH20	1TE10	2TE10	TE25	6TE25	2	50	2

Table 12.18: 2 Speed 2 Winding Starters

Constant Hp				Constant or Variable Torque						
Unit Catalog No.				Unit Catalog No.				NEMA Size	C/B Amps	Space Factor
208 V	240 V	480 V	600 V	208 V	240 V	480 V	600 V			
—	—	TI.5	6TI.75	1TG.33	2TG.33	TG1	6TG1	1	3	2
1TI.75	2TI.75	TI2	6TI2	1TG1	2TG1	TG3	6TG3		7	
1TI2	2TI2	TI5	6TI5	1TG3	2TG3	TG7.5	6TG7.5		15	
1TI5	2TI5	TI7.5	6TI7.5	1TG5	2TG7.5	TG10	6TG10		30	
1TI7.5	2TI10	TI20	6TI20	1TG10	2TG10	TG25	6TG25	2	50	2

Table 12.19: Single Branch Circuit Breaker Feeder Units

Unit Type	Trip Rating	Frame Type	Space Factor
TW15	15	FD	1
TW20	20		
TW30	30		
TW40	40		
TW50	50		
TW60	60		
TW70	70		
TW80	80		
TW90	90		
TW100	100		
TW125	125	FD	1.5
TW150	150		
TW175	175	JD	1.5
TW200	200		
TW225	225		
TW250	250	JD	1.5

Table 12.20: Dual Mounted Branch Circuit Breaker Feeder Units

Unit Type	Trip Rating	Frame Type	Space Factor
TW415	15/15	FD/FD	1
TW420	20/20		
TW430	30/30		
TW450	50/50		
TW460	60/60		
TW4100	100/100		

NOTE: All circuit breaker branch feeder units are rated for 25 k AIR at 480 V.

Table 12.21: Starter Unit Options

Description[1]	Form No.
Start-Stop PB with 1 Pilot Light—Red (On) [2]	AP
Forward-Reverse-Stop PB with 2 Pilot Lights [3]	A1PP
High-Low-Stop PB with 2 Pilot Lights [4]	A2PP
Hand-Off-Auto SS with 1 Pilot Light—Red (On) [2]	CP
1 Pilot Light Only—Red (On) [2]	P
2 Pilot Lights—Red (On) [3] [4]	PP

Table 12.22: Misc. Units—Empty Mounting Units

Description	Unit Type
1 Space Factor	TMT1
2 Space Factor	TMT2

NOTE: Undrilled panel and hinged door.

Table 12.23: Miscellaneous Items

Description	Unit Type
½ Space Factor Blank Door	TBD.5
1 Space Factor Blank Door	TBD1
2 Space Factor Blank Door	TBD2
Ground Stab Kit	TGSK
1 Space Factor Unit Gasketing Kit	TGAS12
1.5 Space Factor Unit Gasketing Kit	TGAS18
2 Space Factor Unit Gasketing Kit	TGAS24

- All units are NEMA 1 enclosure.
- All operators and pilot lights are 22 mm.
- 1 space factor = 12 inches.
- The ground stab kit is field installed and available for all units.

[1] To order a unit with any of the options listed, add the form number as a suffix to the unit type number. Only listed combinations of options are available. Choose only one form number option per starter unit.
[2] Full Voltage Non-Reversing units only.
[3] Reversing units only.
[4] Two-speed units only.

© 2017 Schneider Electric
All Rights Reserved
2/15/2017

Section 13

Obsolescent Panelboards

QMB Fusible Panelboards 13-2

Class **4620** 13-2
Main Switch Replacement Units 13-3
Main Switch Replacement Units 13-3
Branch Switch Replacement 13-3
Guidelines 13-3
Obsolescent Branch Switch Replacement Units 13-4
30–200 A Obsolescent Switch Units—Series D2 13-4
Series E1 Motor Starter Replacement Units 13-5
Application 13-5
Starters 13-5
Selection of Components 13-6
Starter Data 13-6
Accessories 13-6

Replacement Parts 13-6

Class **1600** 13-6

NQOD Lighting and Appliance Panelboards 13-7

Series Ratings 13-7
Pricing Procedure Examples 13-8
NQOD Merchandised Pricing Procedure 13-8
NQOD 20–inch Wide Main Lug Interiors and NQOD Accessories 13-9
NQOD 20–inch Wide Main Circuit Breaker Interiors and Adapter Kits 13-10
NQOD 14–inch Wide Main Lug and Circuit Breaker Interiors 13-10
For Non-Linear Loads (200% Rated Neutral) 13-11
Terminal Data 13-12

I-Line Merchandised Panelboards 13-13

I-Line HCN 13-13

Circuit Breakers for I-Line Panelboards and Switchboards 13-14

2 KI, 2 LC, and LI Breakers 13-14

© 2017 Schneider Electric
All Rights Reserved

Ready-to-Install (RTI)—600 Vac, 250 Vdc

Table 13.1: QMB Main Lugs Interiors, Boxes and Fronts

Total Branch Unit Mounting Space (Inches)	Ampere Rating of Mains	Component Selection			Box Height (inches)	Box Width (inches)
		Interior Assembly—3-pole with Main Lugs	Front (4-piece Standard)	Box		
		Catalog No.	Catalog No.	Catalog No.		
60	225	QMB60902	QM38902TS	QM3890B	90	38
45	400	QMB45754	QM38756TS	QM3875B	75	
45	600	QMB45756	QM38756TS	QM3875B		
45	800	QMB45908	QM38908TS	QM3890B	90	38
45	1200	QMB459012	QM389012TS	QM3890B		
60	600	QMB60906	QM38906TS	QM3890B		

Table 13.2: QMB Main Switch Interiors, Boxes and Fronts

Total Branch Unit Mounting Space (inches)	Ampere Rating of Mains	Maximum Voltage (ac)	Component Selection			Box Height (inches)	Box Width (inches)
			Interior Assembly—3-pole with Main Switch	Front (4-Piece Standard)	Box		
			Catalog No.	Catalog No.	Catalog No.		
51	200	240	QMB5190324M	QM38902TS	QM3890B	90	38
45	400		QMB4590325M	QM38906TS	QM3890B		
	600		QMB4590326M				
51	200	600	QMB5190364M	QM38902TS	QM3890B	90	38
45	400		QMB4590365M	QM38906TS	QM3890B		
	600		QMB4590366M				

Table 13.3: Accessories[1]

Blanks		Solid Neutral Assembly	
Height	Catalog No.	Ampere Rating	Catalog No.
1.5	QMB1BLW	225	QMB2SN
3	QMB3BLW	400	QMB4SN
6	QMB6BLW	600	QMB6SN
15	QMB15BLW	800	QMB8SN
—	—	1200	QMB12SN

Table 13.4: QMB Branch Circuit Breaker Units 600 Vac

Unit Ampere Rating	Unit Height (Inches)	Catalog No. [2]	Description
15 –150	6	QMBHW [3]	Mounts (1) or (2) 3-pole HDL circuit breakers
150 –225	6	QMBJW [4]	Mounts (1) 3-Pole JDL circuit breaker
400	7.5	QMB3400LAW [5]	Includes (1) 3-Pole LAL circuit breaker

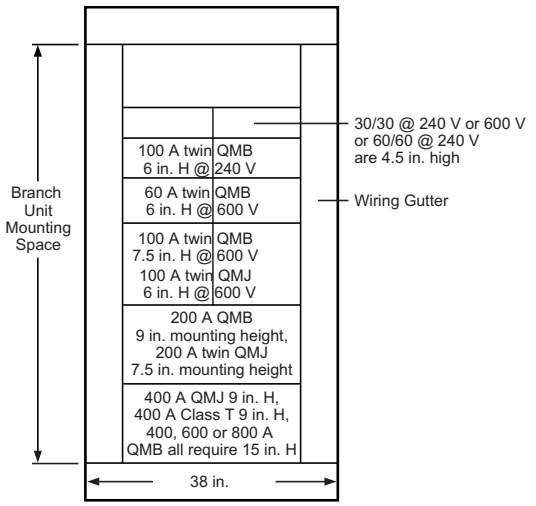

[1] Equipment Ground Bar—PK32DGTA
[2] Circuit breakers not included. Order HDL or JDL circuit breakers from Digest..
[3] Order one catalog number S37444 for each circuit breaker.
[4] Order catalog number S37445 with QMBJW.
[5] For trip ratings above 400A, contact your local Schneider Electric sales office.

© 2017 Schneider Electric
All Rights Reserved
2/15/2017

Main Switch Replacement Units

Table 13.5: Main Switch Replacement Units (Replaces Series E1)

Ampere Rating	Standard—Class H, R, K Fuse Spacing	Class T Fuse Spacing		Class J Fuse Spacing	
	Catalog No.	Catalog No.		Catalog No.	
3-Pole, 240 Vac					
100	QMB323MW	—		—	
200	QMB324MW	—		—	
400	QMB325MW	—		—	
600	QMB326MW	—		—	
800	—	—		—	
3-Pole, 600 Vac					
100	QMB363MW	—		—	
200	QMB364MW	—		—	
400	QMB365MW	{	QMB365MW[6] QMB400T6	{	QMB365MW[6] QMB400J
600	QMB366MW	{	QMB366MW[6] QMB600T6	{	QMB366MW[6] QMB600J
800	QMB367MW	{	QMB367MW[6] QMB800T6	—	

Example: { QMB365MW QMB400T6 constitutes a complete device.

Table 13.6: Main Switch Interior Lug Data

Mechanical Lugs				VCEL Compression Lugs			
Mains Ampere Rating	Conductors Per Phase	Wire Range Wire Bending Space per NEC Table 373-6	Lug Wire Range	Conductors Per Phase	Wire Range Wire Bending Space per NEC Table 373-6	Catalog No.	Lug Wire Range
200	(1)	#6–300 kcmil Al or Cu	#6–300 kcmil Al or Cu	(1)	#4–300 kcmil Al or Cu	VCEL030516H1	#4–300 kcmil Al or Cu
400	(2)	3/0–500 kcmil Al or Cu	3/0–600 kcmil Al or Cu	(2)	2/0–600 kcmil Al or Cu	VCEL05012H1	2/0–500 kcmil Al or Cu
						VCEL07512H1	500–750 kcmil Al
600	(2)	3/0–500 kcmil Al or Cu	3/0–600 kcmil Al or Cu	(2)	2/0–500 kcmil Al or Cu	VCEL05012H1	3/0–500 kcmil Al or Cu
800	(3)	3/0–500 kcmil Al or Cu	3/0–600 kcmil Al or Cu	(3)	2/0–500 kcmil Al or Cu	VCEL05012H1	3/0–500 kcmil Al or Cu

Guidelines

STEP 1: Determine the panelboard interior type. If the date of manufacture is not known, compare your switch with the pictures below to determine the mounting rail direction. Only mounting rails that face outward will accept the Series D2 switch and its required mounting rail extension bracket.

STEP 2: Order a replacement switch from 30–200 A Obsolescent Switch Units—Series D2, page 13-4.

Table 13.7: Panelboard Interiors

Illustration No.	Interior Catalog No. Prefix	Designed For Switch Type	Switch Availability/Order Information
1	Type QM in 31-inch wide box built before 1961.	Series 1-4 30–200 A Maximum	NOT AVAILABLE Series D2 switches are not compatible replacements for this application.
2	Type QM in 31-inch wide box built after 1961 and before 1984.	Series 1-4 30–200 A Maximum	NOT AVAILABLE Order Series D2 switch from page 13-4.
		Series D2 30–200 A Maximum	Order Series D2 switch from page 13-4. (Many still stocked in DS.)
3	Type QW in 38-inch wide box built before 1984.	Series 1-4 30–200 A Maximum	NOT AVAILABLE Order Series D2 switch and plug-on extension assembly from page 13-4.
		Series 1-4 400–600 A	NOT AVAILABLE QMB3400LA available order only from Lexington.
		Series D2 30–200 A Maximum	Order Series D2 switch and plug-on extension assembly from page 13-4.
4	Type QMB in 35-inch or 38-inch wide box built after 1984.	Series E1 or E2 30–800 A	Order from Digest Section 9.

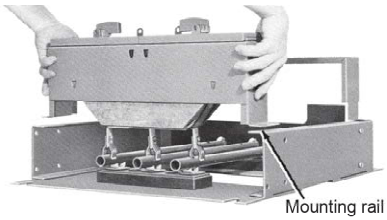

Type QM (31-inch Wide)
Manufactured Before 1961

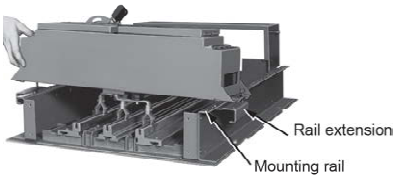

Type QM (31-inch Wide)
Manufactured After 1961 But Before October 1984

[6] Both catalog numbers are required for a complete device.

© 2017 Schneider Electric
All Rights Reserved

Panelboards manufactured before 1961 have the interior mounting rails facing inward (toward the bus). Switches and circuit breakers that fit in this interior type are obsolete.

Panelboards manufactured after 1961 have the interior mounting rails facing outward (away from the bus). This interior accepts Series 1-4 switches and Series D2 switches (shown above with required rail extensions). Order the Series D2 switch (includes mounting rail extensions) from page 13-4.

Type QW (38-inch Wide)
Manufactured Before 1984
Type QW panelboards were built to accept bolt-on 400 A and 600 A Series 1-4 switches. 30-200 A Series D2 switches may be installed as shown using the plug-on extension assembly from page 13-4.

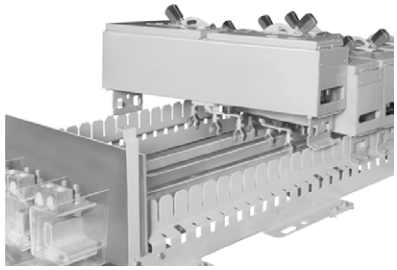

Type QMB
Manufactured After October 1984
Series E1 panelboards will accept only Series E1 or E2 switches. Order from Digest Section 9.

30–200 A Obsolescent Switch Units—Series D2

Available In DS Stock, except where noted.

All Series D2 switches require that rail extension assemblies be attached to the interior side rails in order to mount the switch. These rail extension assemblies are packaged with every Series D2 switch. If a rail extension is lost or missing, contact the nearest Schneider Electric™ sales office to order a replacement.

Plug-on extension assemblies must also be ordered when installing 30–200 A plug-on units in blank spaces of a QW interior in the 38-inch wide box. These plug-on extension assemblies (which extend the bus) are NOT the same as the rail extension assemblies packaged with every Series D2 switch (which extend only the mounting rails).

Table 13.8: Branch Units—Three Pole

Ampere Rating	Unit Height (inches)	Obsolescent *[7]* Series 1–4 Catalog No.	Replaced By Series D2 Catalog No.	Class R Fuse Kits	
				No. Kits Req'd.	Catalog No.
240 Vac					
30-30	4.50	QMB3203T	QMB321T*[8]*	2	HRK30
60-60	4.50	QMB306T	QMB322TD	1	QMB36R
100-100	6.00	QMB310T	QMB323TD	1	QMB100R
200	9.00	QMB3220	QMB324	1	HRK1020
600 Vac					
30-30	4.50	QMB3603T	QMB361T*[8]*	1	QMB36R
30-30	6.00		QMB362T1		
60-60	6.00	QMB3606T	QMB362T	1	QMB60R
100-100	7.50	QMB3610T	QMB363T	2	HRK1020
200	9.00	QMB3620	QMB364	1	

Table 13.9: Obsolescent Circuit Breaker Units *[9]*

Catalog No.
QMB3400LA*[10]*

Table 13.10: Plug-On Extension Assemblies *[11]*

Ampere Rating	Switch Mounting Height (inches)	Catalog No.
30-30 Switch	3	QMB303LEX
30-30 Switch	4.5	QMB306LEX
30-30 Switch	6	QMB306EX
60-60 Switch	4.5	QMB306LEX
60-60 Switch	6	QMB306EX
100-100 Switch	6	QMB310LEX
100-100 Switch	7.5	QMB310EX
200 Switch	9	QMB320EX
LA Circuit Breaker	7.5	QMB310EX

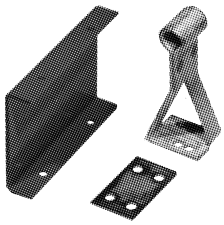

Plug-On Extension Assembly

Table 13.11: Obsolescent Main Switch Units *[12]*

Ampere Rating	Unit Height (inches)	Catalog No.	Replaces Series 4 Unit Catalog No.
3-pole 240 Vac			
100	9	QMB323M*[13]*	QMB3210M
200		QMB324M	QMB3220M
3-pole 600 Vac			
100	9	QMB363M*[13]*	QMB3610M
		QMB363MJ	QMB3610MJ
200	9	QMB364M	QMB3620M

[7] These switch units are no longer available; the catalog number is provided only for cross referencing to Series D2 units.
[8] When this Series D2 switch is used as a replacement for a Series 1-4 3-inch switch, a blank filler plate is also required. Purchase the blank filler plate from a local sheet-metal fabricator.
[9] Circuit breaker units are designed for use in all QMB interior types manufactured between 1961 and October 1984.
[10] Includes a 3-pole, LA type circuit breaker. For other ampere ratings, contact the Schneider Electric Customer Information Center.
[11] Bus extensions are required on all 30–200 A switches. They are also required on all circuit breaker units used in switchboards or in QW type panelboards with a 38-inch wide box.
[12] Replace Series 4 Units
[13] Order only from the Lexington plant.

© 2017 Schneider Electric
All Rights Reserved
2/15/2017

Table 13.11 Obsolescent Main Switch Units *file0000061164__SD17713005_26719__SD17713005_81352_490_348[13.11]* **(cont'd.)**

Ampere Rating	Unit Height (inches)	Catalog No.	Replaces Series 4 Unit Catalog No.
		QMB364MJ	QMB3620MJ

Application

For use on three-phase ac systems—208, 240, or 480 volts. UL® Listed.

Starters

Line Voltage Type

- Non-Reversing—Twin Units: Sizes 0 through 3—Class 8536, Types SB, SC, SD and SE.
- Reversing—Single Units: Sizes 0 through 3—Class 8736, Types SB, SC, SD and SE

QMB Motor Starter Panelboard

Table 13.12: Starter Units—Not stocked in DS. Order only from the Peru plant.

NEMA Size	Coil Voltage *[14]*	Class 8536—Types SB, SC, SD and SEq Type S—Non-Reversing (see Digest page 16-16)		Class 8736—Types SB, SC, SD and SE *[15]* Reversing (see Digest page 16-51	
		Unit Height (Inches)	Twin-Starter Unit (Two Non-Reversing Starters) Catalog No. *[16]*	Unit Height (Inches)	Single-Starter Unit (One Reversing Starter) Catalog No. *[16]*
0	120	9	QMBS8536100120W	9	QMBS873610120W
	208		QMBS8536100208W		QMBS873610208W
	240		QMBS8536100240W		QMBS873610240W
	480		QMBS8536100480W		QMBS873610480W
1	120	9	QMBS8536111120W	9	QMBS873611120W
	208		QMBS8536111208W		QMBS873611208W
	240		QMBS8536111240W		QMBS873611240W
	480		QMBS8536111480W		QMBS873611480W
2	120	10-1/2	QMBS8536222120W	10-1/2	QMBS873622120W
	208		QMBS8536222208W		QMBS873622208W
	240		QMBS8536222240W		QMBS873622240W
	480		QMBS8536222480W		QMBS873622480W
3	120	18	QMBS8536333120W	18	QMBS873633120W
	208		QMBS8536333208W		QMBS873633208W
	240		QMBS8536333240W		QMBS873633240W
	480		QMBS8536333480W		QMBS873633480W

Table 13.13: UL Listed Short Circuit Ratings @ 600 V Maximum

Starter Size	Fusible Switch (with Class R or J fuse) RMS Sym. Amperes	Thermal-Magnetic Circuit Breaker RMS Sym. Amperes
0	100,000	5,000
1		
2		
3		

[14] See motor starter section of the current Digest for complete ratings.
[15] Space and drilling are provided for field addition of control voltage transformer and fuse base.
[16] Catalog numbers include starters, but do not include overload relay thermal units.

© 2017 Schneider Electric
All Rights Reserved

Selection of Components

1. List required motor starter units (reversing or non-reversing) from the tables above.
2. Specify the HP, voltage, phase, frequency and full load current rating of the motor.
3. Specify the unit mounting space.
4. Determine the circuit breaker or fusible switch rating for motor branch circuits from the selection tables on Digest page .
5. For motor starter voltages other than standard voltages of 120, 208, 240 and 480 volts, contact the nearest Schneider Electric sales office.

Starter Data

- Line voltage coils are furnished as standard on all starters.
- Twistouts are provided in starter covers for start-stop push buttons, selector switches and pilot lights. See accessories table below.
- Starter door interlocks are furnished with motor starter enclosures.
- Type S starter enclosures include drillings for the next smaller size.
- All Type S starters have provisions for three overload relay thermal units, as required by NEC® Table 430.37 for three phase ac motor circuits.

Accessories

Accessories listed below are available for field installation on all units. Go to the sections shown for prices.

Table 13.14: Field Installable Accessories

Description	Digest Section
Push Buttons and Selector Switches: Class 9001, Type K	Pushbuttons and Operator Interface
Pilot Lights: Class 9001, Type KP	
Electrical Interlocks: Class 9999, Types SX6, SX7	NEMA-Definite Purpose Type Contactors and Starters
Industrial Control Transformers: Class 9070	Supplemental Digest, Transformers
Type EO1; Starter Size: 0 and 1, Non-Reversing	
Type EO2; Starter Size: 0, 1 and 2, Reversing	
Type EO3; Starter Size: 3	
Type EO4; Starter Size: 4	
Control Circuit Fuse Block: Class 9080, Type PF1	Terminal Blocks

Trim Clamps and Screws; Circuit I.D. Numbers; Locks

Table 13.15: Trim Clamps and Screws

Application	Catalog No.
NEHB Panelboards: All fronts up through 400 A	PK3TC

Catalog No. PK3TC

Table 13.16: Circuit I.D. Numbers

Circuit Number Description	NEHB and NEHB Column Width Catalog No.
1 through 54	8004332501

Table 13.17: Locks—Type 1 Enclosures

Application	Catalog No.
NEHB Panelboards	
All main lug fronts and all main circuit breaker fronts up to 225 A	
Lock only	PK4FL
Complete assembly	PK7FL
All 400 A main circuit breaker fronts	PK5FL
Telephone Cabinets	
Fronts on boxes up to 30 inches wide	PK4FL (Before November 1997) PK22FL (After November 1997)
Fronts on boxes 36 inches or wider	PK5FL

Catalog No. PK4FL

Catalog No. PK5L

© 2017 Schneider Electric
All Rights Reserved
2/15/2017

Series Ratings

This page contains UL Tested and Certified series combination ratings for panelboards. These ratings apply to either an integral main located in the same enclosure or a remote main located in a separate enclosure. NOTE: Where QO(B) GFI circuit breakers are shown above, QO (B) EPD circuit breakers may also be used.

Table 13.18: NQOD Series Ratings

Maximum System Voltage AC *[1]*	Maximum Short Circuit Current Rating (RMS Sym.)	Integral or Remote Main Circuit Breakers and Remote Main Fuses	Branch Circuit Breaker Designations and Allowable Ampere Ranges *[2] [3]*			
			Type	1-pole	2-pole	3-pole
120/240 1Ø	22k	MG	QO (B)	15–30 A	—	—
	42k	HD, JD	QO (B) PL	15–30 A	15–60 A	15–30 A
	65k	HG, JG				
	100k	HJ, JJ				
	125k	HL, JL				
120/240 1Ø 208Y/120	100k	DJ 400 A	QO (B)	15–70 A	15–125 A	—
			QO (B) GFI	15–30 A	40–60 A	—
			QO (B) VH	—	150 A	15–150 A
			QO (B) AFI	15–20 A	—	—
		QJ	QO (B)	15–70 A	15–125 A	15–30 A
			QO (B) AS	15–30 A	15–30 A	15–30 A
			QO (B) GFI	15–30 A	15–60 A	—
			QO (B) PL	15–30 A	15–60 A	15–30 A
			QO (B) VH	—	150 A	35–150 A
			QO (B) AFI	15–20 A	—	—
208Y/120	18k	LA/LH (L) 34200MC, LA/LH (L) 34225MC, LA/LH (L) 34250MC, LA/LH (L) 34400MC	QO (B)	15–30 A	15–30 A	15–30 A
240	22k	QO (B) VH	QO (B)	15–70 A	15–125 A	15–100 A
			QO (B) AS	15–30 A	15–30 A	15–30 A
			QO (B) GFI	15–30 A	15–60 A	—
			QO (B) PL	15–30 A	15–30 A	—
			QO (B) AFI	15–20 A	—	—
		Q2-H*[4]*	QO (B)	15–70 A	15–100 A	15–30 A
			QO (B) GFI	15–30 A	15–30 A	—
			QO (B) AFI	15–20 A	—	—
240	25k	QD	QO (B)	15–70 A	15–125 A	15–30 A
			QO (B) AS	15–30 A	15–30 A	15–30 A
			QO (B) GFI	15–30 A	15–60 A	—
			QO (B) PL	15–30 A	15–60 A	15–30 A
			QO (B) VH	—	150 A	35–150 A
			QO (B) AFI	15–20 A	—	—
		ED, FD*[4]*	QO (B)	15–70 A	15–125 A	15–100 A
			QO (B) GFI	15–30 A	15–60 A	—
			QO (B) AFI	15–20 A	—	—
		KD*[4]*	QO (B)	15–70 A	15–125 A	15–100 A
			QO (B) AS	15–30 A	15–30 A	15–30 A
			QO (B) GFI	15–30 A	15–60 A	—
			QO (B) AFI	15–20 A	—	—
		HD, JD	QO (B)	15–70 A	15–125 A	15–100 A
			QO (B) VH	—	—	35–150 A
			QO (B) GFI	15–30 A	15–60 A	—
			QO (B) AFI	15–20 A	—	—
			QO (B) H	—	15–100 A	—
			QOB2150VH	—	150 A	—
240	42k	LA, MA	Q2L-H*[4]*	—	110–225 A	110–225 A
			QDL	—	70–225 A	70–225 A
		MG	QO (B) VH	15–30 A	15–30 A	15–30 A
		HD, JD	QO (B) PL	15–30 A	15–60 A	15–30 A
		LC 600 A Maximum	QO (B)	15–70 A*[5]*	—	—
			QO (B) VH	15–30 A	15–125 A	15–100 A (3P 208 V Max.)
			QO (B) GFI	15–30 A*[6]*	15–60 A	—
			QO (B) AFI	15–20 A	—	—
240	65k	LC 600 A Maximum	QO (B) VH	15–30 A	15–125 A	15–100 A (3P 208 V Max.)
			QO (B) GFI	15–30 A*[6]*	—	—
			QO (B) AFI	15–20 A	—	—
		DJ 400 A	QO (B)	15–70 A	15–125 A	—
			QO (B) VH	—	150 A	15–150 A
			QO (B) H	—	15–100 A	—
		EG, FG*[4]*, KG*[4]*	QO (B)	15–70 A	15–125 A	15–100 A
			QO (B) GFI	15–30 A	15–60 A	—

[1] For shown circuit breakers rated less than this maximum voltage, the indicated short circuit current rating also applies, but at the voltage rating of the circuit breaker.
[2] Suffixes HID, SWD and SWN may also be applied to the applicable branch circuit breakers shown above, except suffix SWN may NOT be applied in combination with LC main circuit breakers.
[3] Where QO (B) circuit breakers are shown above, QO (B) H, QO (B) VH, and QH (B) circuit breakers may also be used.
[4] Obsolescent. Contact the Schneider Electric local Field Sales Office for the replacement circuit breaker. One-pole FJ circuit breakers are still available.
[5] Only 15–30 A circuit breakers may be used when the LC circuit breaker is rated 450, 500 or 600 A.
[6] Circuit breakers may not be used when the LC circuit breaker is rated 450, 500 or 600 A.

© 2017 Schneider Electric
All Rights Reserved

Table 13.18 NQOD Series Ratings (cont'd.)

Maximum System Voltage AC [1]	Maximum Short Circuit Current Rating (RMS Sym.)	Integral or Remote Main Circuit Breakers and Remote Main Fuses	Branch Circuit Breaker Designations and Allowable Ampere Ranges [2] [3]			
			Type	1-pole	2-pole	3-pole
			QO (B) AFI	15–20 A	—	—
		QG	QO (B)	15–70 A	15–125 A	15–30 A
			QO (B) AS	15–30 A	15–30 A	15–30 A
			QO (B) VH	—	—	35–150 A
		QG, HG, JG	QO (B) GFI	15–30 A	15–60 A	—
			QO (B) PL	15–30 A	15–60 A	15–30 A
			QO (B) AFI	15–30 A	—	—
		HG, JG	QO (B)	15–70 A	15–125 A	15–100 A
			QO (B) VH	—	—	35–150 A
			QO (B) H	—	15–100 A	—
			QOB2150VH	—	150 A	—
		FC22__	QO (B)	15–70 A	15–100 A	15–100 A
		KC22__	QO (B) AS	15–30 A	15–30 A	15–30 A
		FC32__	QO (B) GFI	15–30 A	15–30 A	—
		KC32__	QO (B) AFI	15–20 A	—	—
		400 A Max. Class J or T6 Fuses	QO (B) VH	15–30 A	15–125 A	15–100 A
			QOB-VH	—	150 A	—
			QO (B) AFI	15–20 A	—	—
240	100k	FC24__	QO (B)	15–70 A	15–100 A	15–100 A
		KC24__	QO (B) AS	15–30 A	15–30 A	15–30 A
		FC34__	QO (B) GFI	15–30 A	15–30 A	—
		KC34__	QO (B) AFI	15–20 A	—	—
		200 A Max. Class T3 Fuses	QO (B) AFI	15–20 A	—	—
		EJ, FJ[7]	QO (B)	15–70 A	15–125 A	15–100 A
			QO (B) GFI	15–30 A	15–60 A	—
			QO (B) AFI	15–20 A	—	—
		HJ, JJ	QO (B)	15–70 A	15–125 A	15–100 A
			QO (B) VH	—	—	35–150 A
			QO (B) GFI	15–30 A	15–60 A	—
240	125k	HL. JL	QO (B) PL	15–30 A	15–60 A	15–30 A
			QO (B) AFI	15–20 A	—	—
			QO (B) H	—	15–100 A	—
			QOB2150VH	—	150 A	—
240	200k	FI, KI	QO (B)	15–70 A	15–125 A	15–100 A
			QO (B) AS	15–30 A	15–30 A	15–30 A
			QO (B) GFI	15–30 A	15–60 A	—
			QO (B) AFI	15–20 A	—	—
		Maximum Fuses 200 A Class J or T6 400 A Class T3	QO (B)	15–70 A	15–125 A	15–100 A
			QO (B) AS	15–30 A	15–30 A	15–30 A
			QO (B) GFI	15–30 A	15–60 A	—

NQOD Merchandised Pricing Procedure

1. List circuit breakers required, either plug-on or bolt-on. See appropriate pages for catalog numbers.
2. Determine equivalent number of pole spaces required.
3. Select proper main lugs interior or main lugs interior and main circuit breaker adapter kit based on equivalent number of poles and ampere rating from appropriate page. Interiors include solid neutral and are field convertible to top feed.
4. Select enclosure from appropriate page.
Type 1—Select box and front catalog number corresponding to interior catalog number.
Types 3R, 5, 12—Select enclosure, front included.
5. For complete price, add the component prices. Include panelboard accessories.
6. Apply appropriate discount schedule.

NQOD Merchandised Example

Table 13.19: 208Y/120 Vac, 3Ø4W, 10 kAIR, 225 A, MLO, Type 1 surface mount, bolt-on branch circuit breakers, main sub-feed lugs

Branches	Page No.	Catalog Number	Spaces
225 A MLO Interior	NQOD 20-inch Wide Enclosures—240 Vac, 48 Vdc, page 13-9	NQOD430L225CU	30
Box	NQOD 20-inch Wide Enclosures—240 Vac, 48 Vdc, page 13-9	MH32	—
Cover	NQOD 20-inch Wide Enclosures—240 Vac, 48 Vdc, page 13-9	MHC32S	—
Main Sub-Feed Lugs	NQOD 20-inch Wide Enclosures—240 Vac, 48 Vdc, page 13-9	NQOD225SFL	—

[1] For shown circuit breakers rated less than this maximum voltage, the indicated short circuit current rating also applies, but at the voltage rating of the circuit breaker.
[2] Suffixes HID, SWD and SWN may also be applied to the applicable branch circuit breakers shown above, except suffix SWN may NOT be applied in combination with LC main circuit breakers.
[3] Where QO (B) circuit breakers are shown above, QO (B) H, QO (B) VH, and QH (B) circuit breakers may also be used.
[7] Obsolescent. Contact the Schneider Electric local Field Sales Office for the replacement circuit breaker. One-pole FJ circuit breakers are still available.

© 2017 Schneider Electric
All Rights Reserved
2/15/2017

NQOD 20–inch Wide Main Lug Interiors and NQOD Accessories

Table 13.20: Main Lug Interiors—Accepts plug-on and bolt-on circuit breakers

Max. No. of Single Pole QO™/QOB Circuit Breakers	Mains Rating	Interior Only (Order Branch Circuit Breakers Separately)	Type 1 Enclosure		Types 3R, 5, 12 Enclosures	
			Box 20"W x 5.75"D[8]	Mono-Flat™ Front[8]	Enclosure 20"W x 6.5"D	Height (In.)
		Catalog No.[9][10]	Catalog No.[10]	Catalog No.[10]	Catalog No.[10]	
20" Wide Cabinet—Single Phase 3-Wire						
20	100	NQOD20L100CU	MH23	MHC23 ( )	MH23WP	23
30	225	NQOD30L225CU	MH32	MHC32 ( )	MH32WP	32
42		NQOD42L225CU	MH35	MHC35 ( )	MH35WP	35
42		NQOD42L225CUTF[11]	MH41	MHC41 ( )	MH41WP	41
54		NQOD54L225CU	MH41	MHC41 ( )	MH41WP	41
30	400	NQOD30L400CU	MH50	MHC50V ( )	MH50WP	50
42		NQOD42L400CU	MH53	MHC53V ( )	MH53WP	53
54		NQOD54L400CU	MH59	MHC59V ( )	MH59WP	59
30	600 [12]	NQOD30L600	MH53	MHC53V ( )	MH656WP	53/65
42		NQOD42L600	MH56	MHC56V ( )	MH686WP	56/68
42		NQOD42L600TFL[11]	MH62	MHC62V ( )	MH746WP	62/74
54		NQOD54L600	MH62	MHC62V ( )	MH746WP	62/74
20" Wide Cabinet —Three Phase 4-Wire						
24	100	NQOD424L100CU	MH23	MHC23 ( )	MH23WP	23
30		NQOD430L100CU	MH26	MHC26 ( )	MH26WP	26
30	225	NQOD430L225CU	MH23	MHC32 ( )	MH32WP	32
42		NQOD442L225CU	MH35	MHC35 ( )	MH35WP	35
42		NQOD442L225CUTF[11]	MH41	MHC41 ( )	MH41WP	41
54		NQOD454L225CU	MH41	MHC41 ( )	MH41WP	41
30	400	NQOD430L400CU	MH50	MHC50V ( )	MH50WP	50
42		NQOD442L400CU	MH53	MHC53V ( )	MH53WP	53
54		NQOD454L400CU	MH59	MHC59V ( )	MH59WP	59
30	600 [12]	NQOD430L600	MH53	MHC53V ( )	MH656WP	53/65
42		NQOD442L600	MH56	MHC56V ( )	MH686WP	56/68
42		NQOD442L600TFL[11]	MH62	MHC62V ( )	MH746WP	62/74
54		NQOD454L600	MH62	MHC62V ( )	MH746WP	62/74

Table 13.21: NQOD Accessories[13]

Description	Catalog No.	Schedule
Sub-feed lug kits—main lugs only—1Ø or 3Ø[14]		
• 100 A	NQOD100SFL	PE1A
• 225 A	NQOD225SFL	PE1A
Sub-feed: Bolt-on: 2-pole	QOB2125SL	DE2
• 3-pole	QOB3125SL	DE2
Equipment ground bars: 12 circuit 225 A max.	PK9GTA	DE3A
• 20 circuit 225 A max.	PK12GTA	DE3A
• 24 circuit 225 A max	PK15GTA	DE3A
• 30 circuit 225 A max.	PK18GTA	DE3A
• 54 circuit 225 A max.	PK23GTA	DE3A
• 54 circuit 600 A max	PK27GTA	DE3A
• PK15GTA with #1 to 4/0 Al/Cu lug	PK15GTAL	DE3A
• PK18GTA with #1 to 4/0 Al/Cu lug	PK18GTAL	DE3A
• PK23GTA with #1 to 4/0 Al/Cu lug	PK23GTAL	DE3A
Ground bar insulator kit	PKGTAB	DE3A
Filler plate	QOFP	DE2A
Circuit I.D. number strips		
• 1-102 odd/even (left side numbered 1,3,5 ...101)	NQ102OE	PE1A
• 103-204 odd/even (left side numbered 103,105,107 ... 203)	NQ204OE	PE1A
• 1-102 sequential (left side numbered 1,2,3 ... 102)	NQ102S	PE1A
• 103-204 sequential (left side numbered 103,104,105 ... 204)	NQ204S	PE1A
Directory cards	8003115801	PE1A
Plastic stick-on directory pouch	8003115901	PE1A
• Lock—for Mono-Flat fronts	PK22FL	PE1A
• Key—NSR-251 (for all locks)	LP9618	PE1A
• Touch-up paint USAS #49 Gray (Aerosol can)	PK49SP	DE1
Handle attachments—branch circuit breakers:		
• Handle lock-off	HLO1	DE2E
• Handle tie - (QO and QOB only)	QO1HT	DE2E

[8] Embossed mounting holes add a 0.25 inch standoff to back of MH box.
[9] "CU" suffix indicates copper bussing. NQOD RTI interiors with aluminum bus are no longer available. Order the copper bussed equivalent with a "CU" suffix when ordering a replacement interior.
[10] Add "F" for flush, "S" for surface.
[11] Feed-thru lug interior.
[12] Copper bus standard on 600 A interiors.
[13] For Door-in-door (hinged) trim see the Supplemental & Obsolescence Digest, Section 4.
[14] 42 circuit MLO panelboard requires MH38 box, 54 circuit panelboard requires MH44 box.

© 2017 Schneider Electric
All Rights Reserved

Table 13.21 NQOD Accessories *[13.21]* **(cont'd.)**

Description	Catalog No.	Schedule
• Handle padlock attachment - 1-pole	QO1PA	DE2E
• 2- and 3-pole	QO1PL	DE2E
• Combination handle tie and lock-off for three 1-pole (QO, QOB)	QO3HT	DE2E
Neutral or Ground Lugs: #10 to #2 Al or #14 to #4 Cu	QO70AN	DE2E
• #4 to #1/0 Al/Cu	Q1100AN	DE2E
• #1 to #4/0 Al/Cu	Q1150AN	DE2E
Endwalls for MH Boxes		
• Blank	8011010501	PE1A
• With Knockouts	8011010401	PE1A
Elevating Nuts (4 required)	2322000003	PE1A

NQOD 20–inch Wide Main Circuit Breaker Interiors and Adapter Kits

Table 13.22: Main Circuit Breaker Interiors—Accepts plug-on and bolt-on circuit breakers

Max. No. of One-pole QO™/ QOB Circuit Breakers	Mains Rating	Main Circuit Breaker Adapter Kit	Interior Only (Order Branch Circuit Breakers Separately)	Type 1 Enclosure		Types 3R, 5, 12 Enclosures *[15]*	
				Box 20"W x 5.75"D *[16]*	Mono-Flat™ Front *[16]*	Enclosure 20"W x 6.5"D	Height (In.)
		Catalog No.	Catalog No. *[17]*	Catalog No.	Catalog No.	Catalog No.	
20" Wide Cabinet—Single Phase 3-Wire							
20	100	Factory Installed Backfed QOB Main Circuit Breaker	NQOD20M100CU	MH26	MHC26 ( )	MH26WP	26
30	225	NQODQB or NQODJK	NQOD30L225CU	MH44	MHC44 ( )	MH44WP	44
42			NQOD42L225CU	MH50	MHC50 ( )	MH50WP	50
42			NQOD42L225CUTF*[18]*	MH56	MHC56 ( )	MH56WP	56
54			NQOD54L225CU	MH56	MHC56 ( )	MH56WP	56
30	400	NQOD4	NQOD30L400CU	MH65	MHC65V ( )	MH65WP	65
42			NQOD42L400CU	MH68	MHC68V ( )	MH68WP	68
42			NQOD42L600TFL*[18]*	MH77	MHC77V ( )	MH77WP	77
54			NQOD54L400CU	MH74	MHC74V ( )	MH74WP	74
20" Wide Cabinet—Three Phase 4-Wire							
24	100	Factory Installed Backfed QOB Main Circuit Breaker	NQOD424M100CU	MH26	MHC26 ( )	MH26WP	26
30			NQOD430M100CU	MH29	MHC29 ( )	MH29WP	29
30	225	NQODQB or NQODJK	NQOD430L225CU	MH44	MHC44 ( )	MH44WP	44
42			NQOD442L225CU	MH50	MHC50 ( )	MH50WP	50
42			NQOD442L225CUTF*[18]*	MH56	MHC56 ( )	MH56WP	56
54			NQOD454L225CU	MH56	MHC56 ( )	MH56WP	56
30	400	NQOD4	NQOD430L400CU	MH65	MHC65V ( )	MH65WP	65
42			NQOD442L400CU	MH68	MHC68V ( )	MH68WP	68
42			NQOD442L600TFL*[18]*	MH77	MHC77V ( )	MH77WP	77
54			NQOD454L400CU	MH74	MHC74V ( )	MH74WP	74

Table 13.23: Main Circuit Breaker Adapter Kits (Less Circuit Breaker)

Amperes	Catalog Number	Circuit Breaker Frame*[19]*
225	NQODQB	QBL, QDL, QGL, QJL
225	NQODJK	JDL, JGL, JJL, JLL, KIL
400	NQOD4	LAL, LHL, Q4L

NQOD 14–inch Wide Main Lug and Circuit Breaker Interiors

Table 13.24: Main Lug Interiors—Accepts plug-on and bolt-on circuit breakers

Max. No. of Single Pole QO™/QOB Circuit Breakers	Mains Rating	Interior Only (Order Branch Circuit Breakers Separately)	Type 1 Enclosure		Types 3R, 5, 12 Enclosures	
			Box 14 in. W x 5.75 in. D *[20]*	Mono-Flat™ Front *[21]*	Enclosure 20 in. W x 6.5 in. D	Height (In.)
		Catalog No. *[22]*	Catalog No.	Catalog No.	Catalog No.	
14-inch Wide Cabinet—Single Phase 3-Wire						
12	100	NQOD12L100CU	NQB520	NQC20 ( )	Use 20-inch Wide Enclosure for Types 3R, 5, 12	20
20		NQOD20L100CU	NQB523	NQC23 ( )		23
30	225	NQOD30L225CU	NQB532	NQC32 ( )	Use 20-inch Wide Enclosure for Types 3R, 5, 12	32
42		NQOD42L225CU	NQB535	NQC35 ( )		35
54		NQOD54L225CU	NQB541	NQC41 ( )		41
14-inch Wide Cabinet—Three Phase 4-Wire						
12	100	NQOD412L100CU	NQB520	NQC20 ( )	Use 20-inch Wide Enclosure for Types 3R, 5, 12	20
24		NQOD424L100CU	NQB523	NQC23 ( )		23

[15] Enclosure includes trim kit.
[16] Embossed mounting holes add a 0.25 inch standoff to back of MH box.
[17] "CU" suffix indicates copper bussing. NQOD RTI interiors with aluminum bus are no longer available. Order the copper bussed equivalent with a "CU" suffix when ordering a replacement interior.
[18] Feed-thru lug interior.
[19] Circuit breaker interrupting ratings, see tables starting on Digest The PowerPact Advantage, page .
[20] 14-inch wide cabinets accept 100 A max. branch circuit breakers.
[21] Add "F" for flush, "S" for surface.
[22] "CU" suffix indicates copper bussing. NQOD RTI interiors with aluminum bus are no longer available. Order the copper bussed equivalent with a "CU" suffix when ordering a replacement interior.

© 2017 Schneider Electric
All Rights Reserved
2/15/2017

Table 13.24 Main Lug Interiors—Accepts plug-on and bolt-on circuit breakers (cont'd.)

Max. No. of Single Pole QO™/QOB Circuit Breakers	Mains Rating	Interior Only (Order Branch Circuit Breakers Separately)	Type 1 Enclosure		Types 3R, 5, 12 Enclosures	
			Box 14 in. W x 5.75 in. D *[20]*	Mono-Flat™ Front *[21]*	Enclosure 20 in. W x 6.5 in. D	Height (In.)
		Catalog No. *[22]*	Catalog No.	Catalog No.	Catalog No.	
30		NQOD430L100CU	NQB526	NQC26 ( )		26
30	225	NQOD430L225CU	NQB532	NQC32 ( )	Use 20-inch Wide Enclosure for Types 3R, 5, 12	32
42		NQOD442L225CU	NQB535	NQC35 ( )		35
54		NQOD454L225CU	NQB541	NQC41 ( )		41

Table 13.25: Main Circuit Breaker Interiors—Accepts Plug-On and Bolt-On Circuit Breakers

Max. No. of One Pole QO QOB Circuit Breakers	Mains Rating	Main Circuit Breaker Adapter Kit	Interior Only (Order Branch Circuit Breakers Separately)	Type 1 Enclosure		Types 3R, 5, 12 Enclosure	
				Box 14 in. W x 5.75 in. D*[20]*	Mono-Flat Front *[21]*	Enclosure 20 in. W x 6.5 in. D	Height (In.)
		Catalog No.	Catalog No. *[22]*	Catalog No.	Catalog No.	Catalog No.	
14-inch Wide Cabinet—Single Phase 3-Wire							
12	100	Factory Installed QOB Main Circuit Breaker	NQOD12M100CU	NQB523	NQC23 ( )	Use 20-inch Wide Enclosure for Types 3R, 5, 12	23
20			NQOD20M100CU	NQB526	NQC26 ( )		26
30	225	NQODJK or NQODQB	NQOD30L225CU	NQB544	NQC44 ( )	Use 20-inch Wide Enclosure for Types 3R, 5, 12	44
42			NQOD42L225CU	NQB550	NQC50 ( )		50
54			NQOD54L225CU	NQB556	NQC56 ( )		56
14-inch Wide Cabinet—Three Phase 4-Wire							
12	100	Factory Installed QOB Main Circuit Breaker	NQOD412M100CU	NQB523	NQC23 ( )	Use 20-inch Wide Enclosure for Types 3R, 5, 12	23
24			NQOD424M100CU	NQB526	NQC26 ( )		26
30			NQOD430M100CU	NQB529	NQC29 ( )		29
30	225	NQODJK or NQODQB	NQOD430L225CU	NQB544	NQC44 ( )	Use 20-inch Wide Enclosure for Types 3R, 5, 12	44
42			NQOD442L225CU	NQB550	NQC50 ( )		50
54			NQOD454L225CU	NQB556	NQC56 ( )		56

Table 13.26: Main Circuit Breaker Adapter Kits (Less Circuit Breaker)

Amperes	Catalog No.	Circuit Breaker Frame *[23]*
225	NQODQB	QBL, QDL, QGL, QJL
225	NQODJK	JDL, JGL, JJL, JLL, KIL

For Non-Linear Loads (200% Rated Neutral)

Table 13.27: Main Lug Interiors—Accepts plug-on and bolt-on circuit breakers

Max. No. of Single Pole QO/QOB Circuit Breakers	Mains Rating	Main Lugs Interior Only (Order Branch Circuit Breakers Separately)	Type 1 Enclosure		Types 3R, 5, 12 Enclosures *[24]*	
			Box 20"W x 5.75"D *[25]*	MONO-FLAT® Front *[26]*	Enclosure 20"W x 6.5"D	Height (In.)
		Catalog No. *[27]*	Catalog No.	Catalog No.	Catalog No.	
20" Wide Cabinet—3 Phase 4-Wire						
30	100	NQOD430L100CUNL	MH29	MHC29 ( )	MH29WP	29
42	225	NQOD442L225CUNL	MH38	MHC38 ( )	MH38WP	38
42	400	NQOD442L400CUNL	MH53	MHC53V ( )	MH53WP	53

[20] 14-inch wide cabinets accept 100 A max. branch circuit breakers.
[21] Add "F" for flush, "S" for surface.
[22] "CU" suffix indicates copper bussing. NQOD RTI interiors with aluminum bus are no longer available. Order the copper bussed equivalent with a "CU" suffix when ordering a replacement interior.
[23] Circuit breaker interrupting ratings,on Digest The PowerPact Advantage, page .
[24] Enclosure includes trim kit.
[25] Embossed mounting holes add a 0.25 inch standoff to back of MH box.
[26] Add "F" for flush, "S" for surface.
[27] "CU" suffix indicates copper bussing. NQOD RTI interiors with aluminum bus are no longer available. Order the copper bussed equivalent with a "CU" suffix when ordering a replacement interior.

© 2017 Schneider Electric
All Rights Reserved

Table 13.28: Main Circuit Breaker Interiors

Max. No. of Single Pole QO/QOB Circuit Breakers	Mains Rating	Main Circuit Breaker Adapter Kit *[28]*	Main Lugs Interior Only (Order Branch Circuit Breakers Separately)	Type 1 Enclosure		Types 3R, 5, 12 Enclosures *[29]*	
				Box 20"W x 5.75"D	MONO-FLAT Front *[30]*	Enclosure 20"W x 6.5"D	Height (In.)
		Catalog No.	Catalog No. *[31]*	Catalog No.	Catalog No.	Catalog No.	
20" Wide Cabinet—3 Phase 4-Wire							
30	100	QOB Main Circuit Breaker	NQOD430M100CUNL	MH32	MHC32 ( )	MH32WP	32
42	225	NQODJK NQODQB	NQOD442L225CUNL	MH50	MHC50 ( )	MH50WP	50
42	400	NQOD4	NQOD442L400CUNL	MH68	MHC68V ( )	MH68WP	68

Table 13.29: Main Circuit Breaker Adapter Kits (Less Circuit Breaker)*[28]*

Amperes	Catalog Number	Circuit Breaker Frame *[32]*
225	NQODQB	QBL, QDL, QGL, QJL
225	NQODJK	JDL, JGL, JJL, JLL, KIL
400	NQOD4	LAL, LHL

Table 13.30: NQOD Main Neutral Conductors—Required Size and Quantity *[33]*

Panelboard Ampacity	Neutral Conductors Required*[34]*	Actual Lug Wire Range
100/125	(2) 1/0 Cu or Al	(2) #4–300 kcmil
225	(2) 4/0 Cu or (2) 300 kcmil Al	(2) #4–300 kcmil
400	(4) 3/0 Cu or (4) 250 kcmil Al (2) 600 kcmil Cu (2) 750 kcmil Al	(2) 1/0–300 kcmil or (1) 750 kcmil

[28] Order main circuit breaker separately
[29] Enclosure includes trim kit.
[30] Add “F” for flush, “S” for surface.
[31] “CU” suffix indicates copper bussing. NQOD RTI interiors with aluminum bus are no longer available. Order the copper bussed equivalent with a “CU” suffix when ordering a replacement interior.
[32] Main neutral conductors must be copper or aluminum conductors of minimum size and quantity shown to maintain UL Listing. Requirement is based on heat rise testing.
[33] Neutral conductors must be of size and quantity per table above.
[34] Main neutral conductors must be copper or aluminum conductors of minimum size and quantity shown to maintain UL Listing. Requirement is based on heat rise testing.

© 2017 Schneider Electric
All Rights Reserved
2/15/2017

I-Line HCN

Table 13.31: Interiors, Boxes and Fronts

Total Circuit Breaker Mounting Space (In.)	Mains Ampere Rating	Interior Assembly (Less Branch Circuit Breakers) Catalog Number	Front *[1]* 4 Piece Trim Without Door Catalog Number	Front *[1]* Trim With Door*[3]* Catalog Number	Box *[2]* Type 1 Catalog Number	Box *[2]* NEMA 3R/5/12 *[4]* (Includes Front) Catalog Number	Box Heig-ht (In.)
HCN Main Lugs Only 3-pole—Suitable for use as service equipment when provided with a main circuit breaker. *[5]*							
27	225 A	HCN14522N	HCN52T( )	HCN52T( )D	HC2652B	HC2652WP	52
	400 A	HCN14524					
	600 A	HCN14526					
45	225 A	HCN23652N	HCN65T( )	HCN65T( )D	HC2665B	HC2665WP	65
	400 A	HCN23654					
	600 A	HCN23656					
63	225 A	HCN32742N	HCN74T( )	HCN74T( )D	HC2674B	HC2674WP	74
	400 A	HCN32744					
	600 A	HCN32746					
81	225 A	HCN41832N	HCN83T( )	HCN83T( )D	HC2683B	HC2683WP	83
	400 A	HCN41834					
	600 A	HCN41836					
99	225 A	HCN50922N	HCN92T( )	HCN92T( )D	HC2692B	HC2692WP	92
	400 A	HCN50924					
	600 A	HCN50926					
HCN Main Circuit Breaker *[6] [7]* Includes 3-pole, vertically mounted main circuit breaker—Suitable for use as service equipment							
27	400 A	HCN14654M	HCN65T( )	HCN65T( )D	HC2665B	HC2665WP	65
36	100 A	HCN18651MN					
	225 A	HCN18652MN					
45	400 A	HCN23744M	HCN74T( )	HCN74T( )D	HC2674B	HC2674WP	74
54	100 A	HCN27741MN					
	225 A	HCN27742MN					
63	225 A	HCN32832MN	HCN83T( )	HCN83T( )D	HC2683B	HC2683WP	83
	400 A	HCN32834M					
81	400 A	HCN41924M	HCN92T( )	HCN92T( )D	HC2692B	HC2692WP	92
90	225 A	HCN45922MN					

[1] Add “F” for flush mount, “S” for surface mount.
[2] For Type 1 applications, order interior, front, and box. For Type 3R/5/12 applications, order interior and box only. The front is included with the box.
[3] For Type 1 applications order interior, trim and box. For type 3R/5/12, order interior and box only.
[4] Remove drain screws for Type 3R rating.
[5] Suitable for use as service equipment if equipped with an integral main circuit breaker or when not more than six main disconnecting means are provided and the panelboard is not used as a lighting and appliance branch circuit panelboard.
[6] Bottom feed standard.
[7] Circuit breaker interrupt ratings, starting on Digest The PowerPact Advantage, page .

© 2017 Schneider Electric
All Rights Reserved

2 KI breakers

Table 13.32: K-frame—250 A, Thermal-magnetic, Current Limiting (600 Vac)

KI362502- and 3-pole
4.5 in (114 mm)
Mounting Height

Ampere Rating	AC Magnetic Trip Settings		Current Limiting	Terminal Wire Range
	Low	High	Catalog Number	
2-pole, 600 Vac, 250 Vdc *[1]*				
110 A	550	1100	KI26110( )	AL250KA one #4 AWG–350 kcmil Al or Cu
125 A	625	1250	KI26125( )	
150 A	750	1500	KI26150( )	
175 A	875	1750	KI26175( )	
200 A	1000	2000	KI26200( )	AL250KI one #1/0 AWG–350 kcmil Al or Cu
225 A	1125	2250	KI26225( )	
250 A	1250	2500	KI26250( )	
3-pole, 600 Vac, 250 Vdc				
110 A	550	1100	KI36110	AL250KA one #4 AWG–350 kcmil Al or Cu
125 A	625	1250	KI36125	
150 A	750	1500	KI36150	
175 A	875	1750	KI36175	
200 A	1000	2000	KI36200	AL250KI one #1/0 AWG–350 kcmil Al or Cu
225 A	1125	2250	KI36225	
250 A	1250	2500	KI36250	

2 LC, LI

Table 13.33: L-frame—600 A, Thermal-magnetic (600 Vac)*[2]*

LC
2– and 3–pole
7.5 in. (190 mm)
Mounting Height

Ampere Rating	AC Magnetic Trip Settings		Extra High Interrupting	Current Limiting	Terminal Wire Range
	Low	High	Catalog Number	Catalog Number	
2-pole, 600 Vac *[3]*					
300 A	1500	3200	LC26300( )	LI26300( )	AL600LI5 two #4/0 AWG–500 kcmil AL or Cu
350 A	1750		LC26350( )	LI26350( )	
400 A	2000		LC26400( )	LI26400( )	
450 A	2250	4200	LC26450( )	LI26450( )	
500 A	2500		LC26500( )	LI26500( )	
600 A	3000		LC26600( )	LI26600( )	
3-pole, 600 Vac					
300 A	1500	3200	LC36300	LI36300	AL600LI5 two #4/0 AWG–500 kcmil AL or Cu
350 A	1750		LC36350	LI36350	
400 A	2000		LC36400	LI36400	
450 A	2250	4200	LC36450	LI36450	
500 A	2500		LC36500	LI36500	
600 A	3000		LC36600	LI36600	

[1] 2-pole circuit breaker catalog numbers are completed by adding required phase connection letters as suffix to catalog number. See Digest Section 9.
[2] Type LC and LI circuit breakers are NOT recommended for use on single-motor branch circuits.
[3] 2-pole circuit breaker catalog numbers are completed by adding required phase connection letters as suffix to catalog number. See Digest Section 9.

© 2017 Schneider Electric
All Rights Reserved
2/15/2017

Section 14

Busway

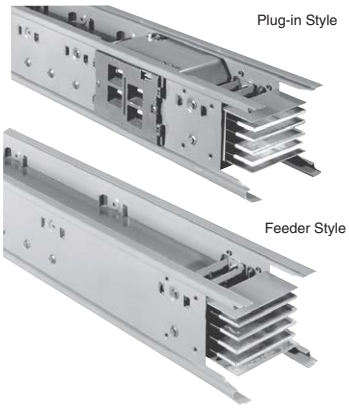

I-Line II Busway 800-5000 A

Powerbus 100-400 A

I-Line™ Busway 14-2

Special Purpose Plug-In Units 14-2
- APD and SD Busway Plug-In Units (Not I-Line™ Busway) 14-2
- Capacitor and Transformer Units 14-2
- Combination Switches and Contactors (For I-Line Busway) 14-2
- Ground Indicator and Neutralizer Plugs 14-2

Powerbus™ Busway 14-3

Powerbus™ Busway 14-3
- Powerbus 225 (240 V) Ampere 14-3
- Powerbus 100 (600 V) Ampere 14-3
- Busbar Configurations 14-4

© 2017 Schneider Electric
All Rights Reserved

APD and SD Busway Plug-In Units (Not I-Line™ Busway)

Table 14.1: Circuit Breaker Plug-In Units

Breaker Frame	Trip Rating Amps	600 Vac 3Ø4W for use on both 3-Pole and 3Ø4W Busway Catalog Number	Breaker Frame	Trip Rating Amps	600 Vac 3Ø4W for use on both 3-Pole and 3Ø4W Busway Catalog Number
FA	15	SD75415	LA	125	SD78417LA
	20	SD75420		150	SD78418LA
	30	SD75430		175	SD78419LA
	40	SD75440		200	SD78426LA
	50	SD75450		225	SD78427LA
	60	SD75460		250	SD67428
	70	SD75470		300	SD67436
	100	SD75416		350	SD67438
				400	SD67446

Table 14.2: 100 A Busway Plug-In Unit Circuit Breaker Enclosures and Accessories

Enclosure Only (Price Circuit Breaker Separately)	1Ø3W & 3Ø4W [1] Catalog No.	Ground Kit Catalog No.	Floor Operator Attachment Catalog No.
QO Breaker–70 A Enclosure	PINQO	PGKQO2	PI1QO
QO Breaker/Recpt.–70 A Enclosure [2]	PINQOR	PGKQOR	PI1QO
FA Breaker–15-100 A Enclosure	PIN100FA	PGKFA2	PI1FA

Capacitor and Transformer Units

Table 14.3: 3Ø Capacitor Units (Order plug-in units separately) [3]

3Ø kVAR	240 Vac Catalog Number	480 Vac Catalog Number
2.5	—	PC3402
5	PC3205	PC3405
7.5	PC3207	PC3407
10	PC3210	PC3410
15	PC3215	PC3415
20	—	PC3420
25	—	PC3425
30	—	PC3430

Table 14.4: 1Ø Transformer Units (Order plug-in units separately) [4]

1Ø kVA	Primary Voltage 240 Vac Catalog Number	Primary Voltage 480 Vac Catalog Number
1	PT2200	PT2400
1.5	PT2201	PT2401
2	PT2202	PT2402
3	PT2203	PT2403
5	PT2205	PT2405
7.5	PT2207	PT2407
10	PT2210	PT2410

Combination Switches and Contactors (For I-Line Busway)

Refer to Catalog **5600CT9101**.

Ground Indicator and Neutralizer Plugs

Table 14.5: Ground Indicator and Neutralizer Plugs

240 Vac—3-Pole Catalog Number	600 Vac—3-Pole Catalog Number
PGD3200G	PGD3600G

[1] With PIN-QO, use circuit breakers QO215H, QO220H, and QO230H. For higher ratings, use FA enclosures and circuit breakers.
[2] Enclosure with space for three QO circuit breaker poles and provisions for three duplex receptacles.
[3] Capacitor units do not plug into busway and must be used with plug-in switch or circuit breaker.
[4] Transformer units do not plug into busway and must be used with plug-in switch, circuit breaker or cable tap box. Standard secondary voltage terminals are provided for 120 V or 240 V 1Ø2W, or 120/240, 1Ø3W connection. Specify secondary voltage if other than standard.

© 2017 Schneider Electric
All Rights Reserved
2/15/2017

Powerbus 225 (240 V) Ampere

Table 14.6: 1Ø Systems—Powerbus Straight Lengths and Fittings *[1]*

Component	Configuration 3E 1Ø3W	Configuration 3B 1Ø2W Isolated Ground
	Catalog No.	Catalog No.
Straight 10 ft.	PBCP3E225ST120	PBCP3B225ST120
Straight 4 ft.	PBCP3E225ST048	PBCP3B225ST048
Elbow – Left	PBCF3E225LL	PBCF3B225LL
Elbow – Right	PBCF3E225LR	PBCF3B225LR
Cross Fitting	PBCF3E225CR	PBCF3B225CR
Tap Box	PBCF3E225TB	PBCF3B225TB

Table 14.7: 3Ø3W—Straight Lengths and Fittings

Component	Configuration 3A	Configuration 4B Isolated Ground
	Catalog No.	Catalog No.
Straight 10 ft.	PBCP3A225ST120	PBCP4B225ST120
Straight 4 ft.	PBCP3A225ST048	PBCP4B225ST048
Elbow – Left	PBCF3A225LL	PBCF4B225LL
Elbow – Right	PBCF3A225LR	PBCF4B225LR
Cross Fitting	PBCF3A225CR	PBCF4B225CR
Tap Box	PBCF3A225TB	PBCF4B225TB

Table 14.8: 3Ø4W—Straight Lengths and Fittings

Component	Configuration 4A 100% Neutral	Configuration 5A 100% Neutral Plus Isolated Ground; or 200% Neutral
	Catalog No.	Catalog No.
Straight 10 ft.	PBCP4A225ST120	PBCP5A225ST120
Straight 4 ft.	PBCP4A225ST048	PBCP5A225ST048
Elbow – Left	PBCF4A225LL	PBCF5A225LL
Elbow – Right	PBCF4A225LR	PBCF5A225LR
Cross Fitting	PBCF4A225CR	PBCF5A225CR
Tap Box	PBCF4A225TB	PBCF5A225TB

Powerbus 100 (600 V) Ampere

Table 14.9: 1Ø Systems—Powerbus Straight Lengths and Fittings *[1]*

Component	Configuration 3E 1Ø3W	Configuration 3B 1Ø2W Isolated Ground
	Catalog No.	Catalog No.
Straight 10 ft.	PBCP3E100ST120	PBCP3B100ST120
Straight 4 ft.	PBCP3E100ST048	PBCP3B100ST048
Elbow – Left	PBCF3E100LL	PBCF3B100LL
Elbow – Right	PBCF3E100LR	PBCF3B100LR
Cross Fitting	PBCF3E100CR	PBCF3B100CR
Tap Box	PBCF3E100TB	PBCF3B100TB

Table 14.10: 3Ø3W—Straight Lengths and Fittings

Component	Configuration 3A	Configuration 4B Isolated Ground
	Catalog No.	Catalog No.
Straight 10 ft.	PBCP3A100ST120	PBCP4B100ST120
Straight 4 ft.	PBCP3A100ST048	PBCP4B100ST048
Elbow – Left	PBCF3A100LL	PBCF4B100LL
Elbow – Right	PBCF3A100LR	PBCF4B100LR
Cross Fitting	PBCF3A100CR	PBCF4B100CR
Tap Box	PBCF3A100TB	PBCF4B100TB

Table 14.11: 3Ø4W—Straight Lengths and Fittings

Component	Configuration 4A 100% Neutral	Configuration 5A 100% Neutral Plus Isolated Ground; or 200% Neutral
	Catalog No.	Catalog No.
Straight 10 ft.	PBCP4A100ST120	PBCP5A100ST120
Straight 4 ft.	PBCP4A100ST048	PBCP5A100ST048
Elbow – Left	PBCF4A100LL	PBCF5A100LL
Elbow – Right	PBCF4A100LR	PBCF5A100LR
Cross Fitting	PBCF4A100CR	PBCF5A100CR
Tap Box	PBCF4A100TB	PBCF5A100TB

[1] Also suitable for DC applications.

© 2017 Schneider Electric
All Rights Reserved

Busbar Configurations

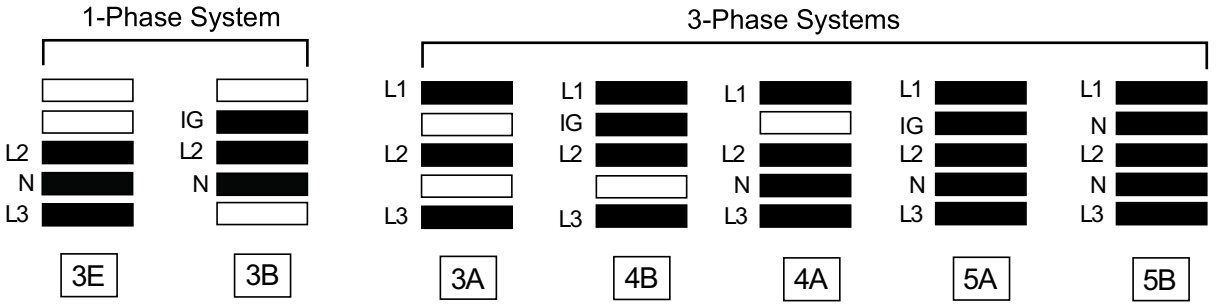

NOTE: Integral ground is standard.

© 2017 Schneider Electric
All Rights Reserved
2/15/2017

Section 15

Operating Mechanisms and Disconnect Switches

Electromechanical
Reduced Voltage Starter

IEC Style Disconnect Switches 15-2

UL508 Motor Disconnect Switches 15-8

NEMA Style Disconnect Switches 15-9

Door-Mounted Operating Mechanisms 15-10

Bracket-Mounted Disconnect Devices 15-13

Flexible Cable Mechanisms 15-14

Disconnect Switch Accessories 15-15

© 2017 Schneider Electric
All Rights Reserved

200 A Switch

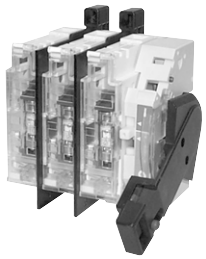

30 A Side Handle
GS1EERU30

Compact 30 A Switch

Catalog Number Identification System

The GS1 part numbers can be identified as shown in Table 15.1.
See Catalog 9421CT0301 for specific applications.

Table 15.1: Identification System

GS1	D	U	3

Model GS1 Fusible (Class J fuse unless noted), LK3 Nonfusible

Current Range, Operator Type (front operator unless noted), Accessory Type

D	30 A front and side operation	**T**	800 A (Class L if fused)
DD	30 A Class CC front and side operation	**U**	1000 A
E	30 A	**W**	1200 A
EE	30 A Class CC	**AH**	handle
G	60 A	AHT	handle with test
J	100 A	AE	extension shaft
M	200 A	AD	auxiliary contact holder
Q	400 A	AM	auxiliary contact
S	600 A		

UL Certification

Poles—Number of Poles, 2 or 3

NOTE: All fusible switches through 400 A, and nonfused switches through 200 A, are equipped with a feature to test the optional auxiliary contacts without energizing the load, when the appropriate GS1AHT•••• handle is used.

Table 15.2: Fusible Switches, 3-pole

Catalog No.	Rating	Fuses	Shaft to Use
Compact GS1 Fusible IEC Style Disconnect Switches			
GS1DDU3	30 A	Class CC	5x5 shaft
GS1DU3	30 A	Class J	5x5 shaft
GS1 Fusible IEC Style Disconnect Switches			
GS1EEU3	30 A	Class CC	10x10 shaft
GS1EU3	30 A	Class J	10x10 shaft
GS1GU3	60 A	Class J	10x10 shaft
GS1JU3 *[1] [2]*	100 A	Class J	10x10 shaft
GS1MU3 *[1] [2]*	200 A	Class J	10x10 shaft
GS1QU3 *[1]*	400 A	Class J	10x10 shaft
GS1SU3 *[1] [2]*	600 A	Class J	15x15 shaft
GS1TU3 *[1]*	800 A	Class L	15x15 shaft

Table 15.3: Fusible Switches with Direct Mount Side Handle

Catalog No.	Description
GS1EERU20	30 A, 2-pole, Class CC
GS1EERU30	30 A, 3-pole, Class CC
GS1AH01	Right-side handle for GS1EERU20 and GS1EERU30

Table 15.4: Nonfusible Switches, 3-pole

Catalog No.	Rating	Shaft to Use
Compact LK3 Nonfusible IEC Style Disconnect Switches		
LK3DU3 *[2]*	30 A	5x5 shaft
LK3 Nonfusible IEC Style Disconnect Switches		
LK3GU3	60 A	10x10 shaft
LK3JU3 *[2]*	100 A	10x10 shaft
LK3MU3 *[1]*	200 A	10x10 shaft
LK3QU3 *[1]*	400 A	15x15 shaft
LK3SU3 *[1]*	600 A	15x15 shaft
LK3TU3 *[1]*	800 A	15x15 shaft
LK3UU3 *[1]*	1000 A	15x15 shaft
LK3WU3 *[1]*	1200 A	15x15 shaft

Example of the parts to order to build a complete GS or LK switch:

Choose a Switch	+	Shaft	+	Handle Assembly	+	Lugs, if needed
600 A, LK3SU3		Shaft 200 mm, GS1AE6		Black Handle, LK3AH150		Lugs Kit, GS1AW503

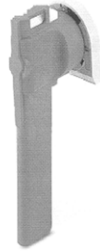

For example:
LK3SU3 (600 A nonfusible switch, use 15x15 shaft)
+ **GS1AE6** (15x15 200 mm Type H shaft)
+ **LK3AH150** (black/black, lockable)

To add auxiliary contacts:
For front-mounted contacts order
GS1AD30 (front-mounted auxiliary contact holder)
+ **GS1AM110** (NO contact for GS1AD10, 20, 30)

[1] Shipped with line side terminal shrouds—for additional shrouds, see Table 15.12. Terminal lug must be ordered separately—see Table 15.11.
[2] Obsolete.

© 2017 Schneider Electric
All Rights Reserved
2/15/2017

GS1AH10

GS1AH102
Type D—alternate handles for compact switches only

GS1AE7/AE71 Shafts
5 mm x 5 mm

Compact Shaft Kits

GS1AH101

GS1AH120
Type G—Standard Handle Design

Use these shaft kits when using compact switches:

GS1AE8/AE81 Shafts
5 mm x 5 mm

LK3AH160

GS1AE6

GS1AE2/AE21 Shafts

Handles

Table 15.5: Operating Handles for Compact GS1 and LK3 for Use with Shaft Type D

Type NEMA/UL	Type IEC	Defeatable	Padlockable	Color	Operation	Catalog Number
1, 12	IP54	Yes	Yes	Black	Off/On (O/I)	GS1AH101
				Red/Yellow		GS1AH102

Table 15.6: Operating Handles for Compact GS1 and LK3 for Use with Shaft Type G

Type NEMA/UL	Type IEC	Defeatable	Padlockable	Color	Operation	Catalog Number
1, 3R, 12	IP54	Yes	Yes	Black	Off/On (O/I)	GS1AH110
				Red/Yellow	Off/On (O/I)	GS1AH120
				Black	Test/Off/On (T/O/I)	GS1AHT110
				Red/Yellow	Test/Off/On (T/O/I)	GS1AHT120
1, 3R, 4, 4X, 12	IP65	Yes	Yes	Black	Off/On (O/I)	GS1AH410 *[3]*
				Red/Yellow	Off/On (O/I)	GS1AH420
				Black	Test/Off/On (T/O/I)	GS1AHT410
				Red/Yellow	Test/Off/On (T/O/I)	GS1AHT420

Table 15.7: Operating Handles for Standard GS1 and LK3

Type NEMA/UL	Type IEC	Defeatable	Padlockable	Color	Operation	Catalog Number
GS1 30–100 A and LK3 60–100 A (3 in. handles)						
1, 3R, 12	IP54	Yes	Yes	Black	Off/On (O/I)	GS1AH110
				Red/Yellow	Off/On (O/I)	GS1AH120
				Black	Test/Off/On (T/O/I)	GS1AHT110
				Red/Yellow	Test/Off/On (T/O/I)	GS1AHT120
1, 3R, 4, 4X, 12	IP65	Yes	Yes	Black	Off/On (O/I)	GS1AH410
				Red/Yellow	Off/On (O/I)	GS1AH420
				Black	Test/Off/On (T/O/I)	GS1AHT410
				Red/Yellow	Test/Off/On (T/O/I)	GS1AHT420
GS1 200–400 A and LK3 200 A (5 in. handles)						
1, 3R, 12	IP54	Yes	Yes	Black	Off/On (O/I)	GS1AH130
				Red/Yellow	Off/On (O/I)	GS1AH140
				Black	Test/Off/On (T/O/I)	GS1AHT130
				Red/Yellow	Test/Off/On (T/O/I)	GS1AHT140
1, 3R, 4, 4X, 12	IP65	Yes	Yes	Black	Off/On (O/I)	GS1AH430
				Red/Yellow	Off/On (O/I)	GS1AH440

Table 15.8: Operating Handles for Use with Shaft Type H

Type NEMA/UL	Type IEC	Defeatable	Padlockable	Color	Operation	Catalog Number
For LK3 400–1200 A						
1, 3R, 4, 4X, 12	IP65	No	Yes	Black	Off/On (O/I)	LK3AH150 *[3]*
		No		Red/Yellow		LK3AH160 *[3]*
		Yes		Black		LK3AH170
		Yes		Red/Yellow		LK3AH180
For GS1 600–800 A						
1, 3R, 4, 4X, 12	IP65	No	Yes	Black	Off/On (O/I)	LK3AH150 *[3]*
		No		Red/Yellow		LK3AH160 *[3]*
		Yes		Black		GS1AH170
		Yes		Red/Yellow		GS1AH180 *[3]*

NOTE: UL approved for indoor or outdoor applications.

Table 15.9: Shafts

Length in.	Length mm	Catalog No.
Shaft 5 mm x 5 mm—For use with Operating Handles, Type D		
12.6	320	GS1AE7
15.7	400	GS1AE71 *[3]*
Shaft 5 mm x 5 mm—For use with Operating Handles, Type G		
12.6	320	GS1AE8 *[3]*
15.7	400	GS1AE81
Shaft 10 mm x 10 mm—For Standard GS1 and LK3		
12.6	320	GS1AE2
15.7	400	GS1AE21
Shaft 15 mm x 15 mm—For use with Operating Handles, Type H		
7.9	200	GS1AE6 *[3]*
15.7	400	GS1AE61 *[3]*

[3] Obsolete.

© 2017 Schneider Electric
All Rights Reserved

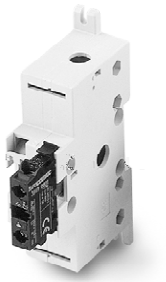

GS1AD10 + GS1AM110

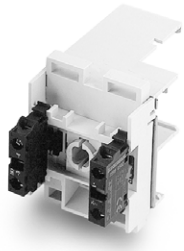

GS1AD20 + GS1AM110

GS1AD30 + GS1AM110

Terminal Lugs

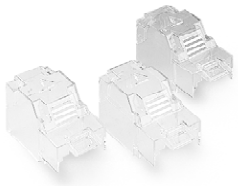

Terminal Shrouds

Shorting Links

Accessories

Table 15.10: Auxiliary Contacts

Type	Description	Catalog No.
For Compact LK3 / GS1		
U = Upper or Top mounted	Standard products allow up to 4 auxiliary contacts without any extra contact holders. Contact holder (for 5 to 8 auxiliary contacts)	GS1AD10
10 A	1 N.O. Contact Block	GS1AM110
600 Vac	1 N.C. Contact Block	GS1AM101
For LK3 60–200 A, GS1 30–400 A		
U = Upper or Top mounted	Contact holder required (for 1 to 8 upper auxiliary contacts)	GS1AD20
10 A	1 N.O. Contact Block	GS1AM110
600 Vac	1 N.C. Contact Block	GS1AM101
S = Side mounted *[4]*	1 N.O. & N.C. Contact Block (max of two blocks—any mix)	GS1AN11
	2 N.O. & N.C. Contact Block (max of two blocks—any mix)	GS1AN22
S = Side mounted *[4]*	1 N.O. & N.C. Contact Block w/ Test (max of two blocks—any mix)	GS1ANT11 *[5]*
	2 N.O. & N.C. Contact Block w/ Test (max of two blocks—any mix)	GS1ANT22 *[5]*
For LK3 400–1200 A		
U = Upper or Top mounted	Contact holder (for 1 to 4 auxiliary contacts)	LK3AD30
10 A	1 N.O. Contact Block	GS1AM110
600 Vac	1 N.C. Contact Block	GS1AM101
For GS1 600–800 A		
Micro-switch (top mounted)	1 N.O./N.C. Contact	GS1AMU3 *[5]*
	2 N.O./N.C. Contact	GS1AMU4 *[5]*

Table 15.11: Terminal Lugs

For Use On	Wire Size (AWG)	No. of Wires per Lug	Wire Type	Lugs per Kit	Catalog No.
Compact GS1/LK3	14–10	1	Cu	—	Standard
GS1 30 A CC	14–10	1	Cu	—	Standard
GS1 30 A J	14–10	1	Cu	—	Standard
GS1/LK3 60 A J	10–3	1	Cu	—	Standard
LK3 100 A	14–2/0	1	Cu	—	Standard
GS1 100 A	14–2/0	1	Cu/Al	6	GS1AW303
GS1/LK3 200 A	6–3/0	1	Cu/Al	6	GS1AW403
GS1/LK3 400–600 A *[6]*	2 x 2–2 x 600	2	Cu/Al	6	GS1AW503
GS1/LK3 800 A / LK3 1000 A *[6]*	3 x 2–3 x 600	3	Cu/Al	6	GS1AW803 *[5]*
LK3 1250 A *[6]*	4 x 2–4 x 600	2	Cu/Al	12	GS1AW903

Table 15.12: Terminal Shrouds

For Use On	Catalog No.
For Line or Load Side *[7]*	
Compact GS1/LK3	Standard
All GS1/LK3 30 A	Standard
All GS1/LK3 60 A	Standard
LK3 100 A	Standard
GS1 100 A *[8]*	GS1AP33
GS1/LK3 200 A *[8]*	GS1AP43
GS1 400 A	GS1AP63
LK3 400–600 A	LK3AP63
GS1 600–800 A	GS1AP83
LK3 800–1250 A	LK3AP83

Table 15.13: Shorting Links

For Use On	Shorting Links per Kit	Catalog No.
GS1 60 A	3	GS1AU203
GS1 100 A		GS1AU303
GS1 200 A		GS1AU403
GS1 400 A		GS1AU503
GS1 600–800 A		GS1AU803

Table 15.14: Shaft Padlocking Kit

For Use On	Catalog No.
Compact GS1/LK3	Standard
LK3 60–200 A	
GS1 30–400 A	
LK3 400–1250 A	

[4] A GS1AN•• contact block may not be used on the same switch as a GS1ANT••. A single switch must use all GS1AN11/GS1AN22 contact blocks **or** all GS1ANT11/GS1ANT22 contact blocks.
[5] Obsolete.
[6] GS1 600–800 A and LK3 800–1250 A can receive 1 lug for 3 cables per terminal or 2 lugs for 2 cables per terminal.
[7] All GS1 and LK3 switches are provided with line side shrouding.
[8] Three-piece kit for either the line or load side.

© 2017 Schneider Electric
All Rights Reserved

Dimensions

GS1DDU3
Compact
30 A rating
Class CC fuses

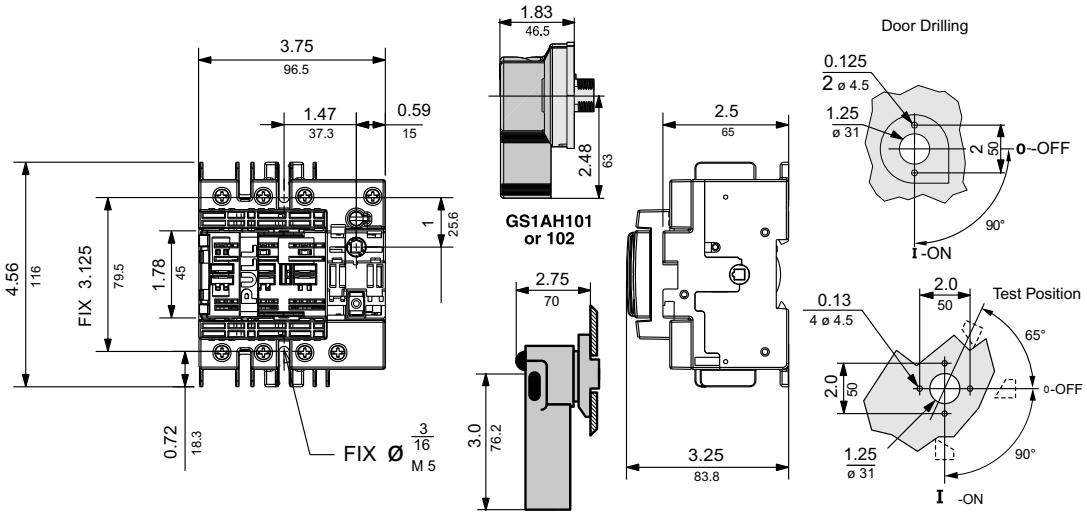

GS1AH/AHT110, 120, 410, or 420

GS1DU3
Compact
30 A rating
Class J fuses

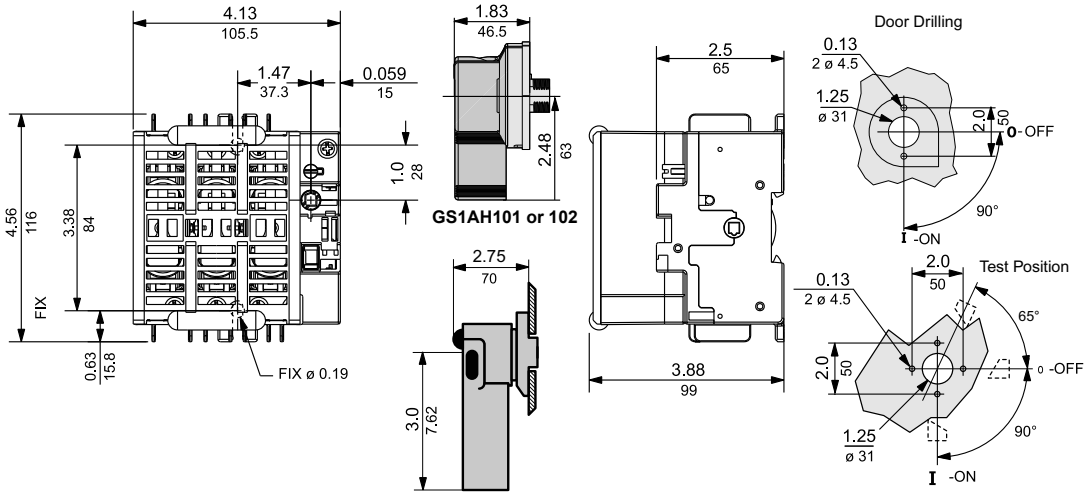

GS1AH/AHT110, 120, 410, or 420

GS1EEU3
30 A rating
Class CC fuses

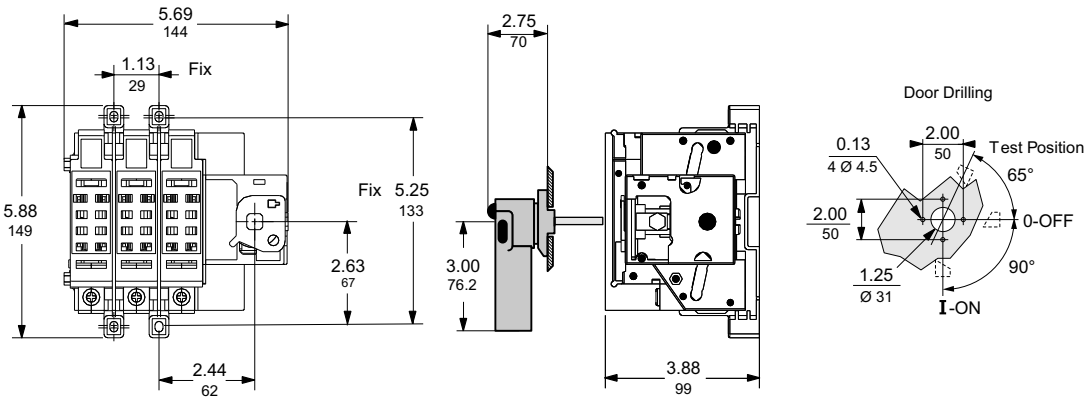

GS1AH/AHT110, 120, 410, or 420

© 2017 Schneider Electric
All Rights Reserved

GS1 Dimensions

GS1EU3/GS1GU3, 30 and 60 A (Class J)

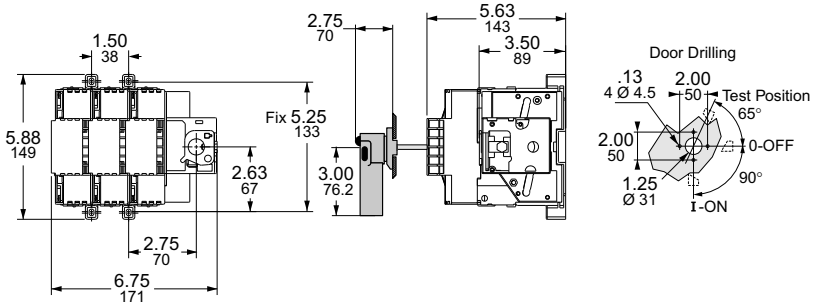

Mounting Hole Dimension: 0.19 in. (4.8 mm)

GS1JU3, 100 A (Class J)

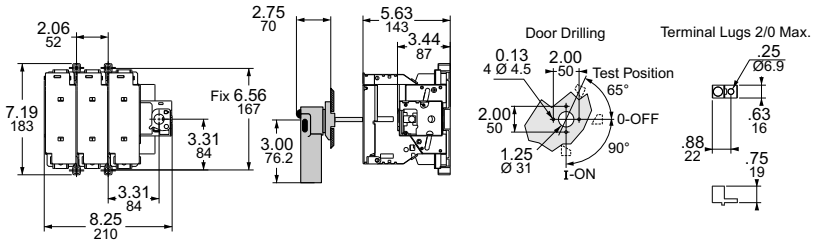

Mounting Hole Dimension: 0.19 in. (4.8 mm)

GS1MU3, 200 A (Class J)

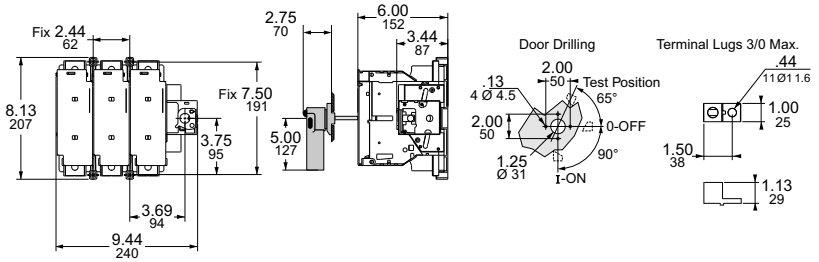

Mounting Hole Dimension: 0.19 in. (4.8 mm)

GS1QU3, 400 A (Class J)

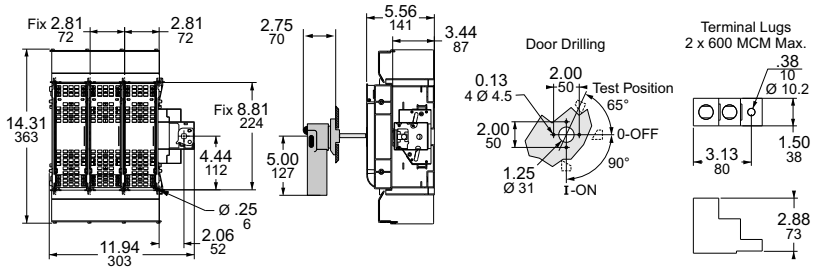

Mounting Hole Dimension: 0.25 in. (6.3 mm)

GS1SU3/GS1TU3, 600 A (Class J) and 800 A (Class L)

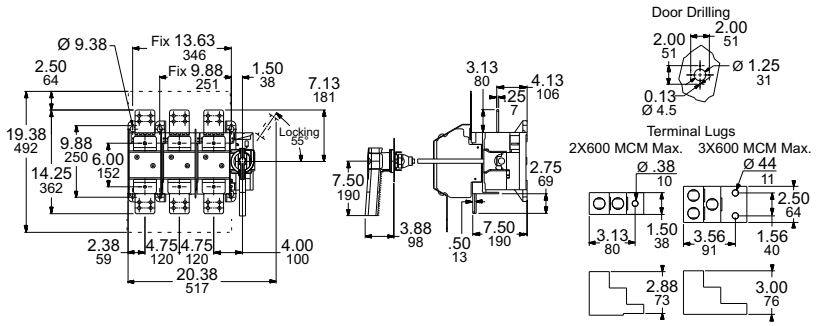

Mounting Hole Dimension: 0.38 in. (9.6 mm)

© 2017 Schneider Electric
All Rights Reserved
2/15/2017

LK3 Dimensions

LK3DU3, Compact LK3 30 A

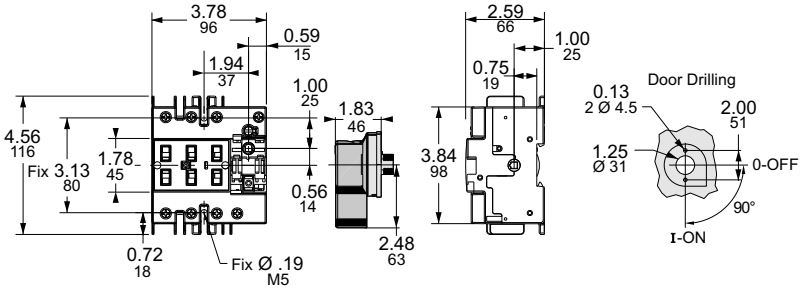

Mounting Hole Dimension: 0.19 in. (4.8 mm)

LK3GU3/LK3JU3, 60 and 100 A

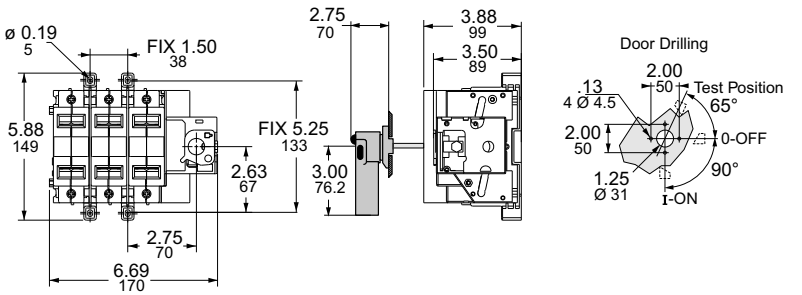

Mounting Hole Dimension: 0.19 in. (4.8 mm)

LK3MU3, 200 A

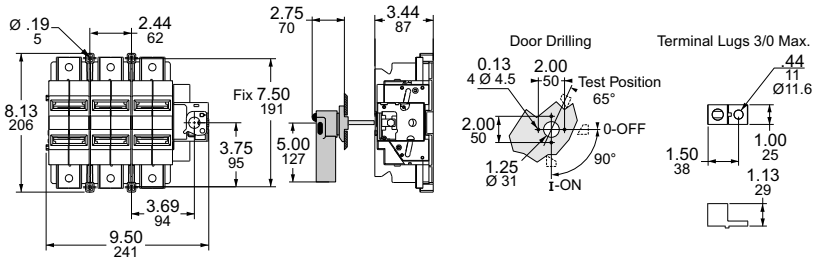

Mounting Hole Dimension: 0.19 in. (4.8 mm)

LK3QU3/LK3SU3, 400 and 600 A

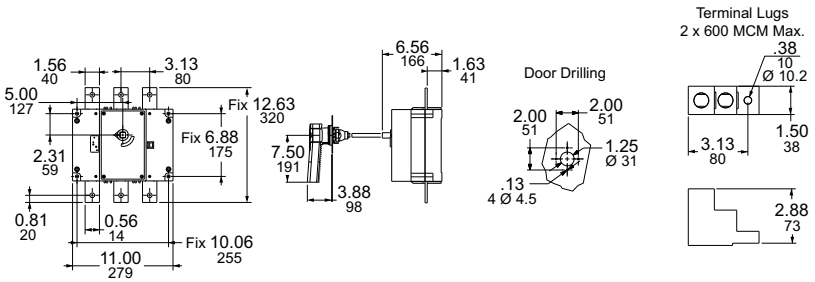

Mounting Hole Dimension: 0.25 in. (6.3 mm)

LK3TU3/LK3UU3/ LK3WU3, 800, 1000, and 1250 A

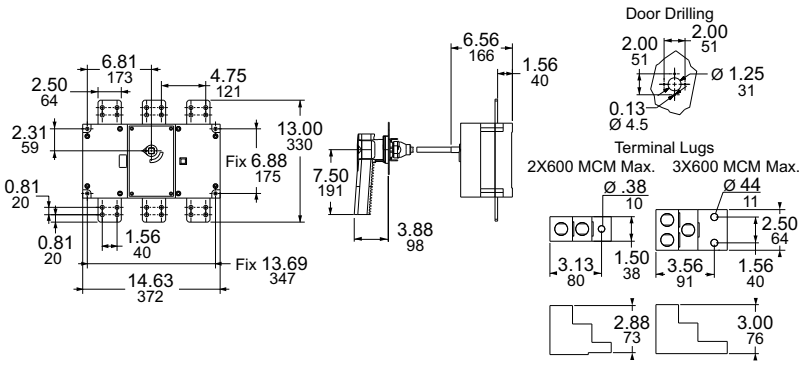

Mounting Hole Dimension: 0.38 in. (9.6 mm)

© 2017 Schneider Electric
All Rights Reserved

Non-Metallic Enclosure

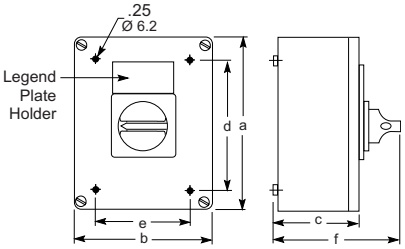

VC1GU–VC6GU

Vario

The Vario motor disconnect switch is also offered as an enclosed switch made of corrosion resistant material. The 3-pole version makes the Vario switch ideal for manual motor control applications. The switches are compact, easy to wire and connect, and come undrilled to allow variable cable entry positions.

NOTE: VCGUN enclosures are UL approved.

Table 15.15: Non-Metallic Enclosed Switches[1]

Ampere Size		IP55-PVC 3-Pole, NEMA Type 1 & 12
UL	IEC	Catalog No.
20	32	VC1GUN
25	40	VC2GUN
45	63	VC3GUN
63	80	VC4GUN
100	125	VC5GUN
115	175	VC6GUN

Table 15.16: Non-Metallic Enclosed Switch Dimensions

Catalog No. [2]	No. of Poles	Dimensions											
		a		b		c		d		e		f	
		in.	mm	in.	mm	in.	mm	in.	mm	in.	mm	in.	mm
VC1GU–VC2GU	3	6.7	170	4.1	105	3.2	82	4.8	122	2.1	53	5.0	128
VC3GU–VC4GU		6.7	170	5.3	135	3.3	85	5.1	130	3.7	95	5.2	131
VC5GU–VC6GU		11.0	280	8.6	220	5.0	126	7.9	201	7.5	190	8.6	203

Table 15.17: Vario Manual Motor Control Switches, IEC

Rating (A) IEC	kW Rating				3-Pole Switch Body	
	230 V	240 V	400 V	415 V	500 V	690 V
20	4	4	5.5	5.5	7.5	11
25	5.5	5.5	7.5	7.5	11	15
32	5.5	5.5	11	11	11	15
40	7.5	7.5	15	15	18.5	15
63	15	15	22	22	30	22
80	18.5	18.5	30	30	37	30
125	22	22	37	37	45	37
175	30	30	45	45	55	45

[1] Assembled, includes switches mounted in an enclosure with a handle.
[2] UL Rated, NEMA Type 1, 12, IP55.

© 2017 Schneider Electric
All Rights Reserved

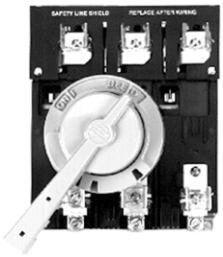

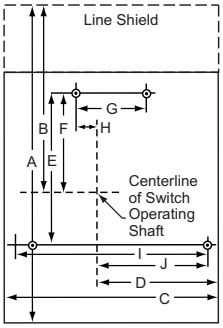

File D10

The D10 disconnect switch features high I²T rating, longer contact life, visible contact indication, fuse-mounting flexibility, dead-front construction, and auxiliary interlocks.

A complete installation includes a D10 disconnect switch, D11 handle operator, and D12 fuse clip kit. The D10 accepts Class H, K, J, or R fuses, or can be used for nonfusible applications. The D10 disconnect switch is operated by a cast metal handle operator that is lockable in the Off position and defeatable in the On position.

Table 15.18: Lug Data

Rating (A)	Number Per Pole	Wire Range [1]	Wire Type
30	1	14–8 AWG	Cu
60		14–4 AWG	Cu
100		14–1/0 AWG	Al–Cu
200		6 AWG – 250 kcmil	Al–Cu

Table 15.19: Fuse Clip Kits

D10 Switch Size	Fuse Clip Rating [2] Amperes	AC Volts	Type	Catalog Number
30 A	No Fuse			D12C01
	0–30	250	H, K	D12C21 [3]
	0–30	250	R	D12CR21
	0–30	600	H, K	D12C61
	0–30	600	R	D12CR61
	0–30	600	J	D12CJ1
	31–60	250	H, K	D12C22 [3]
	31–60	600	H, K	D12C62
	31–60	600	R	D12CR62
	31–60	600	J	D12CJ2 [3]
	61–100	250	H, K	D12C23
60 A	No Fuse			D12D02
	0–30	250	R	D12DR21 [3]
	0–30	600	H, K	D12D61
	0–30	600	R	D12DR61
	31–60	250	H, K	D12D22
	31–60	250	R	D12DR22
	31–60	600	H, K	D12D62
	31–60	600	R	D12DR62
	31–60	600	J	D12DJ2
	61–100	250	H, K	D12D23 [3]
	61–100	600	H, K	D12D63 [3]
	61–100	600	J	D12DJ3 [3]
	61–100	600	R	D12DR63 [3]
100 A	No Fuse			D12E03
	31–60	250	H, K	D12E22 [3]
	31–60	600	H, K	D12E62
	61–100	250	H, K	D12E23
	61–100	250	R	D12ER23
	61–100	600	H, K	D12F63
	61–100	600	R	D12FR63
	61–100	600	J	D12EJ3
	101–200	250	H, K	D12F24
	101–200	600	H, K	D12F64
	101–200	600	J	D12FJ4
200 A	No Fuse			D12F04
	61–100	600	H, K	D12F63
	101–200	250	H, K	D12F24
	101–200	250	R	D12FR24
	101–200	600	H, K	D12F64
	101–200	600	R	D12FR64
	101–200	600	J	D12FJ4

Table 15.20: Disconnect Switches (without fuse clips or shorting straps)

600 V—Without Service Entrance Rating

Starter NEMA Size	Rating (A)	Max. Horsepower Rating [4] 120 V	200–240 V	480 V	600 V	Catalog Number
0–1	30	5	10	20	25	D10S1
2	60	10	20	40	50	D10S2
3	100	15	30	60	75	D10S3
4	200	25	50	100	100	D10S4

600 V—With Service Entrance Rating

Starter NEMA Size	Rating (A)	Max. Horsepower Rating [4] 120 V	200–240 V	480 V	600 V	Catalog Number
0–1	30	5	10	20	25	D10S1H
2	60	10	20	40	50	D10S2H
3	100	15	30	60	75	D10S3H
4	200	25	50	100	100	D10S4H

Table 15.21: Rotary Handle Operator Kits and Shafts

Kits include: Handle, Shaft, and Actuator NEMA Type 1, 3, 3R, 4, and 12

Description	Rating (A)	Enclosure Interior Depth (in.)	Catalog Number
Complete Kit with Handle, Shaft, and Actuator	30, 60, 100, 200	5–6	D11SF4
		6–10	D11SF10
		10–16	D11SF16
Shaft only		6	D11SH10 [3]
		12	D11SH16

Table 15.22: Auxiliary Electrical Interlock(for mounting on a 30–200 A disconnect switch) [5]

Block Description (with switch contacts open)	Catalog Number
1 N.O.	D11N0 [3]
1 N.C.	D11NC
1 N.O. and 1 N.C.	D11N0C
2 N.O.	D11N00 [3]
2 N.O. and 2 N.C.	D11N0C2

Table 15.23: Interrupting and Withstandability Ratings

Rating (A)	Interrupting Rating Amperes Symmetrical 600 Vac, 3Ø	Withstandability I²T (Amperes² seconds)
30	1,200	0.38×10^6
60	1,800	1.28×10^6
100	2.000	2.62×10^6
200	3,600	5.25×10^6

NOTE: These switches are for motor circuit applications.

Table 15.24: Switch Dimensions (in.)

Rating (A)	Length A	B	Width C	Mounting Hole Dimensions D	E	F	G	H	I	J	Depth K [6]	I [7]
30	7-5/16	4-15/32	5-7/8	3-15/32	6	3-15/32	1-7/8	13/32	5-7/16	3-1/4	4-3/32	4-11/32
60	7-5/16	4-15/32	5-7/8	3-15/32	6	3-15/32	1-7/8	13/32	5-7/16	3-1/4	4-11/32	4-11/32
100	9-27/32	5-11/32	8-3/16	4-5/8	5-13/16	3-13/16	2-11/16	51/64	7-5/16	4-3/16	5-23/32	4-27/32
200	12-3/16	7-7/32	8-3/16	4-5/8	5-13/16	3-13/16	2-11/16	51/64	7-5/16	4-3/16	5-23/32	4-27/32

[1] One conductor per lug.
[2] Continuous current should not exceed switch rating (size). Fuse clip kits should be sized to accommodate inrush.
[3] Obsolete.
[4] Nonfused ratings.
[5] One block per switch.
[6] Maximum depth with largest fuse.
[7] Depth including insulating barrier on service entrance switches.

© 2017 Schneider Electric
All Rights Reserved

Type L Circuit Breaker Mechanisms

Type L door-mounted, variable-depth operating mechanisms feature heavy duty, all metal construction with trip indication. All can be padlocked in the Off position when the enclosure door is open. Further, the handle assemblies can be locked Off with up to three padlocks, which also locks the enclosure when the door is closed. (The 3" handle accepts one padlock.) Complete kits are rated for NEMA Type 1, 3R, and 12 enclosures. They include a handle assembly, operating mechanism, and shaft assembly.

Table 15.25: Electrical Interlock Kits—Class 9999

[1]

Description	Class	Type
Single-Pole, Double-Throw	9999	R47
Double-Pole, Double-Throw	9999	R48

Table 15.26: Complete Kits

For Use With Circuit Breakers (Not Included in the Complete Kit)			Operating Mechanism Standard 6 in. Handle				Operating Mechanism Short 3 in. Handle	
			Standard Shaft Kit		Long Shaft Kit		Long Shaft Kit	
Circuit Breaker or Interrupter Type	No. of Poles	Frame Size (A)	Type	Mounting Depth *[2]* Range	Type	Mounting Depth *[2]* Range	Type	Mounting Depth *[2]* Range
GJL	3	75, 100	LG1	5-1/2 to 10-1/4	LG4	5-1/2 to 20-7/8	LG3	5-1/2 to 20-7/8
FAL, FCL, FHL	2–3	100	LN1	5-1/2 to 10-7/16	LN4	5-1/2 to 21	LN3	5-1/2 to 21
KAL, KCL, KHL	2–3	250	LP1	6-1/4 to 11-3/16	LP4	6-1/4 to 21-3/4	LP3	6-1/4 to 21-3/4
LAL *[3]*, LHL *[3]*, Q4L	2–3	400	LR1	6-5/16 to 10-7/8	LR4	6-5/16 to 21-1/2	LJ3	5-1/2 to 21-3/8
MEL, MXL	2–3	800	LT1 *[4]*	7-3/16 to 11-5/8	LT4 *[4]*	7-3/16 to 22-1/4	Not recommended.	
MAL, MHL	2–3	1200	LT1 *[4]*	7-3/16 to 11-5/8	LT4 *[4]*	7-3/16 to 22-1/4		
NAL, NCL, NEL, NXL	2–3	1200	LX1 *[4]*	8-1/4 to 12-3/4	LX4 *[4]*	8-1/4 to 23-3/8		

Table 15.27: Component Parts

Use With			Handle Assemblies NEMA 1, 3R, 12		Operating Mechanism (Lockout Included)	Standard Shaft (Support Bracket Not Required)		Long Shaft (Support Bracket Included)	
			3 in.	Standard					
Circuit Breaker or Interrupter Type	No. of Poles	Frame Size (A)	Type	Type	Type	Mounting Depth *[2]* Range	Type	Mounting Depth *[2]* Range	Type
GJL	3	75, 100	LH3	LH6	LG7	5-1/2 to 10-7/16	LS8	5-1/2 to 21	LS13
FAL, FCL, FHL	2–3	100	LH3	LH6	LF1	5-1/2 to 10-7/16	LS8	5-1/2 to 21	LS12
KAL, KCL, KHL	2–3	250	LH3	LH6	LK1	6-1/4 to 11-3/16	LS8	6-1/4 to 21-3/4	LS12
LAL *[3]*, LHL *[3]*, Q4L	2–3	400	Not recommended	LH6	LL1	6-5/16 to 10-7/8	LS8	6-5/16 to 21-1/2	LS10
MEL, MXL	2–3	800		LH8	LM1	7-3/16 to 11-5/8	LS8	7-3/16 to 22-1/4	LS10
MAL, MHL	2–3	1200		LH8	LM1	7-3/16 to 11-5/8	LS8	7-3/16 to 22-1/4	LS10
NAL, NCL, NEL, NXL	2–3	1200		LH8	LX7	8-1/4 to 12-3/4	LS8	8-1/4 to 23-3/8	LS10

Table 15.28: NEMA Type 4 and 4X Handle Assemblies *[5]*

Use With			Standard Handle Assemblies		3 in. Handle Version	
Circuit Breaker or Interrupter Type	No. of Poles	Frame Size (A)	NEMA 1, 3R, 4, 12 (Painted)	NEMA 1, 3R, 4, 4X, 12 (Chrome Plated)	NEMA 1, 3R, 4, 12 (Painted)	NEMA 1, 3R, 4, 4X, 12 (Chrome Plated)
			Type	Type	Type	Type
GJL	3	75	LH46	LC46	LH43	LC43
FAL, FCL, FHL	2–3	100	LH46	LC46	LH43	LC43
KAL, KCL, KHL	2–3	250	LH46	LC46	LH43	LC43
LAL, LHL, Q4L	2–3	400	LH46	LC46	Not recommended	
MEL, MXL	2–3	800	LH48	LC48		
MAL, MHL	2–3	1000	LH48	LC48		
NAL, NCL, NEL, NXL	2–3	1200	LH48	LC48		

Table 15.29: IEC Style Operating Mechanisms

Circuit Breaker or Interrupter Type	Handle Type 1, 4, 4X, 12		Operating Mechanism (Lockout Included)	Extension Shafts		
				Mounting Depth		Type
	Color	Type	Type	Min.	Max.	
GJL	Red/Yellow	NW3 *[6]*	LG8	6-1/8	10-3/4	NS16
	Black	NW3B		6-1/8	17-7/8	NS336 *[7]*

Operating Mechanism

Operating Mechanism (includes lockout)

3 in. Handle Assembly

Standard Handle Assembly

[1] Optional accessory for use with 9421L operating mechanisms. Not used with GJL, NAL, NCL, NEL, NXL, NSF, NSJ, PowerPact™ C, D, H, and J circuit breakers; use field-installed circuit breaker interlocks instead.
[2] Mounting depth in inches, measured from the circuit breaker mounting surface (control panel) to the outside of the enclosure door.
[3] These operating mechanisms cannot be used with any LA/LH circuit breakers with an MB or MT suffix.
[4] Types LT1, LT4, LX1, and LX4 include an 8 in. handle rather than a 6 in. handle.
[5] Due to gasketing, NEMA Type 3 and 4 handle assemblies are **not** trip indicating.
[6] Obsolete.
[7] Contains support bracket.

© 2017 Schneider Electric
All Rights Reserved
2/15/2017

Panel Drilling, Types G, F, and K

Refer to Table 15.30 for the shaft cutting dimensions.

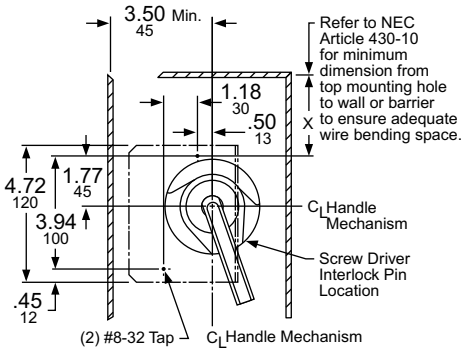

Panel drilling for GJL circuit breaker and operating mechanism

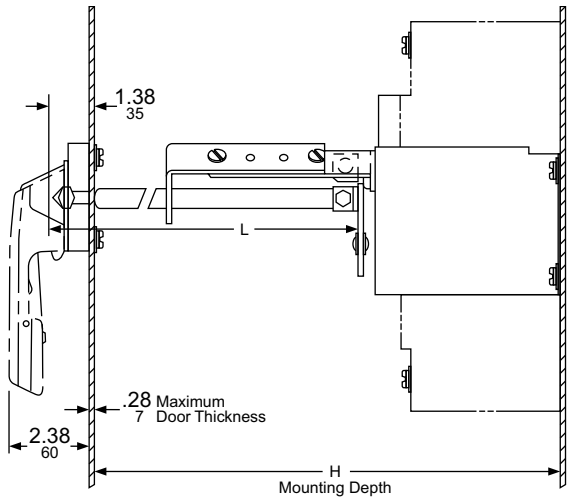

L = Overall shaft length
H = Distance from inside of enclosure door to circuit breaker mounting surface

NOTE: The mounting depth is measured from the circuit breaker mounting surface (control panel) to the outside of the enclosure door.

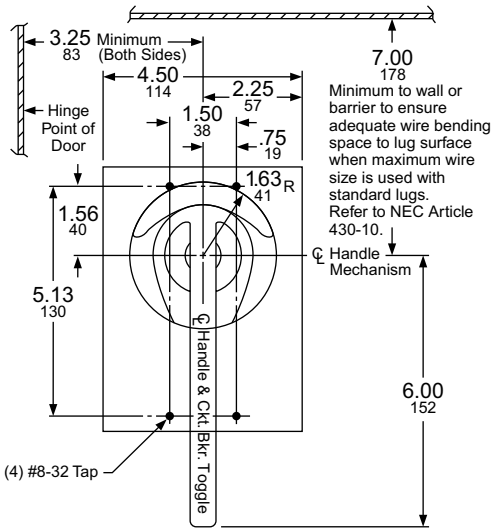

Panel drilling for FAL, FCL, and FHL circuit breakers and operating mechanisms

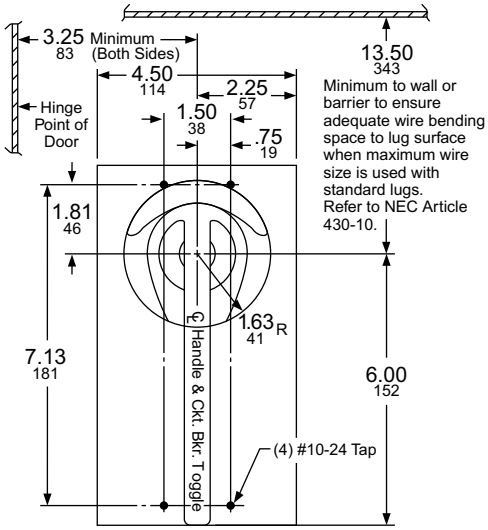

Panel drilling for KAL, KCL, and KHL circuit breakers and operating mechanisms

Dimensions: in. / mm

Table 15.30: Shaft Cutting Dimensions, in. (mm)

Class	Type	Shaft Length Formula	H = Standard Shaft		H = Long Shaft	
			Min.	Max.	Min.	Max.
9421	LG7, LG1, LG4, LG3	L = H–**2.50** (64)	**5.50** (140)	**10.25** (260)	**5.50** (140)	**20.85** (530)
9421	LF1, LN1, LN3, LN4	L = H–**2.88** (73)	**5.50** (140)	**10.44** (265)		**21.00** (533)
9421	LK1, LP1, LP3, LP4	L = H–**3.63** (92)	**6.25** (159)	**11.19** (284)	**6.25** (159)	**21.75** (552)
9421	LL1, LR1, LR4	L= H–**3.13** (790)	**6.31** (160)	**10.88** (276)	**6.31** (160)	**21.50** (546)
9421	LM1, LT1, LT4	L= H–**4.00** (102)	**7.18** (182)	**11.63** (295)	**7.18** (182)	**22.25** (565)
9421	LX7, LX1, LX4	L= H–**5.17** (131)	**8.25** (210)	**12.75** (324)	**8.25** (210)	**23.38** (594)

© 2017 Schneider Electric
All Rights Reserved

Panel Drilling, Types L, M, and N

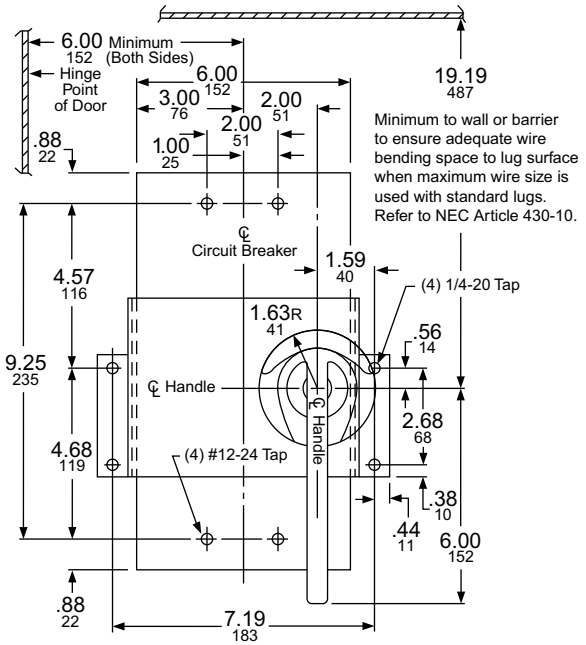

Panel drilling for LAL, LHL, and Q4L circuit breakers and operating mechanisms

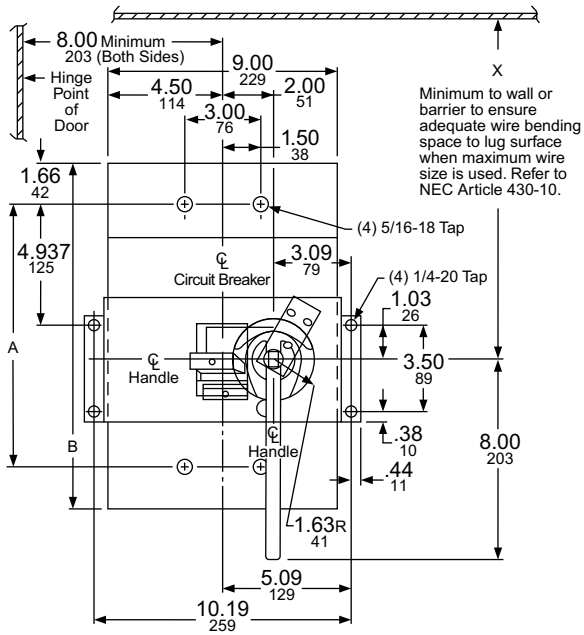

Panel drilling for MAL, MEL, MHL, and MXL circuit breakers and operating mechanisms

Circuit Breaker Type	Dimensions = in. (mm)	
	A	B
MAL, MHL	10.69 (272)	14.00 (356)
MEL, MXL	11.47 (291)	14.75 (375)

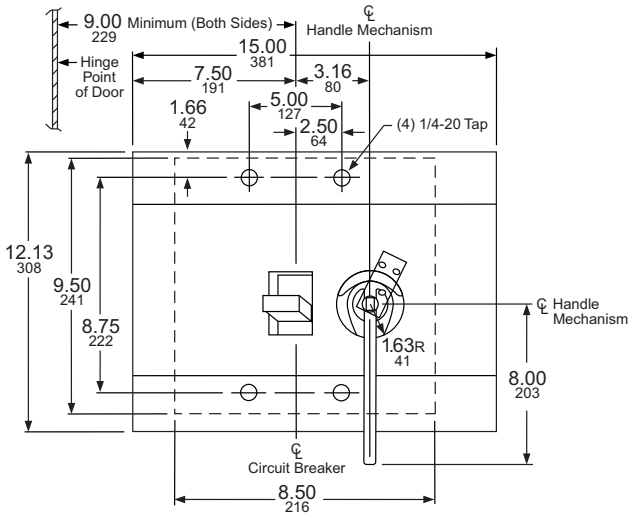

Panel drilling for NAL, NCL, NEL, and NXL circuit breakers and operating mechanisms

Dimensions: in. / mm

© 2017 Schneider Electric
All Rights Reserved
2/15/2017

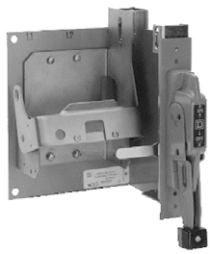

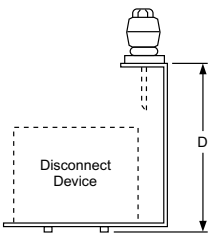

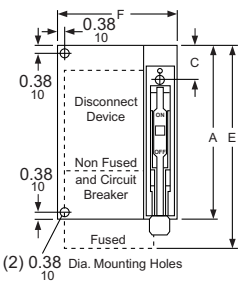

NOTE: No external auxiliary contacts are available for the following circuit breakers:
GJL circuit breakers must use internal auxiliary contacts, catalog number AAC.
PowerPact D circuit breakers must use internal auxiliary contacts, catalog number AAC.

NOTE: For additional variations, contact the Customer Care Center (CCC) at 1-888-778-2733.

Bracket-Mounted Operating Mechanisms for Use With Square D™ Circuit Breakers

The circuit breaker operating mechanisms listed below are shipped with the external operating handle assembled to a bracket. Circuit breakers are not included and must be ordered separately. A trim plate is provided with each kit to prevent any mounting screws from being accessible from the front and also to provide an attractive installation.The operating handle is Type A1. These switches can be used with Class 9423 door closing mechanisms.

Table 15.31: Bracket-Mounted Operating Mechanisms for Use With Square D™ Circuit Breakers

Use With			Operating Mechanism
Circuit Breaker or Interrupter Type	No. of Poles	Frame Size (A)	Right Hand, Flange Mounting Cat. No.
FAL, FHL	2–3	100	BN1
KAL, KHL	2–3	250	BP1
LAL *[1]*, LHL *[1]*, Q4L	2–3	400	BR1

NOTE: Some enclosures may not accept the listed bracket-mounted operating mechanisms; contact the enclosure manufacturer.

Table 15.32: Electrical Interlock Kits—Class 9999

Optional accessory for use with circuit breaker operating mechanisms listed to the left and the flexible cable mechanisms listed below, except GJL

Description	Class	Type
Single Pole, Double Throw	9999	R26
Double Pole, Double Throw	9999	R27

NOTE: Not used with GJL; use field installed circuit breaker interlocks.

Table 15.33: Dimensions, in. (mm)

Type	A	C	D	Min. Enclosure Depth *[2]* in. (mm)	F
BG1, BN1	8.75 (222)	1.13 (29)	6.50 (165)	8.00 (203)	7.13 (181)
BP1	9.13 (232)				7.38 (187)

NOTE: Back panel support is recommended for Types TFB1, 2, and 3. Other devices may also require support if the flange is not sufficiently rigid.

Table 15.34: Class 9422—Flexible Cable Mechanisms for Use with Square D Circuit Breakers

For use with Square D circuit breakers and Class 9422 A handle operators. Especially designed for tall, deep enclosures where placement flexibility is required. See Digest 177, Section 8 for dimensions.

Circuit Breaker Type	No. of Poles	Frame Size (A)	Cable Mechanism		Cable Mechanisms with A1 Handle For Types 1, 3, 3R, 4, 12
			Cable Length	Catalog No.	Catalog No.
GJL	3	100	36 in.	CGJ30	CGJ31
			48 in.	CGJ40	CGJ41
			60 in.	CGJ50	CGJ51
			120 in.	CGJ10	CGJ11 *[3]*
FAL, FHL	2, 3	100	36 in.	CFA30	CFA31
			60 in.	CFA50	CFA51
			120 in.	CFA10	CFA11
KAL, KHL	2, 3	250	36 in.	CKA30	CKA31
			60 in.	CKA50	CKA51
			120 in.	CKA10	CKA11
LAL *[4]*, LHL *[4]*, Q4L	2, 3	400	36 in.	CLA30	CLA31
			60 in.	CLA50	CLA51
			120 in.	CLA10 *[3]*	CLA11

Table 15.35: Class 9999 Auxiliary Contact Kits for Disconnect Switches and Circuit Breakers

Class	Type	SPDT Type	DPDT Type
Disconnect Switches			
9422	TF	R8	R9
Circuit Breaker Operating Mechanisms			
9421	LF, LK, LL, LM, LN, LP, LR, LT	R47	R48
9422	RM, RN, RP, RR, RT	R26	R27
9422	CFA, CKA, CLA, CSF	R26	R27

[1] These operating mechanisms cannot be used with any LA/LH circuit breakers with an MB or MT suffix.
[2] The minimum enclosure depth is greater than Dimension D, since additional space is needed when mounting the mechanism.
[3] Obsolete.
[4] These operating mechanisms cannot be used with any LA/LH circuit breakers with an MB or MT suffix.

© 2017 Schneider Electric
All Rights Reserved

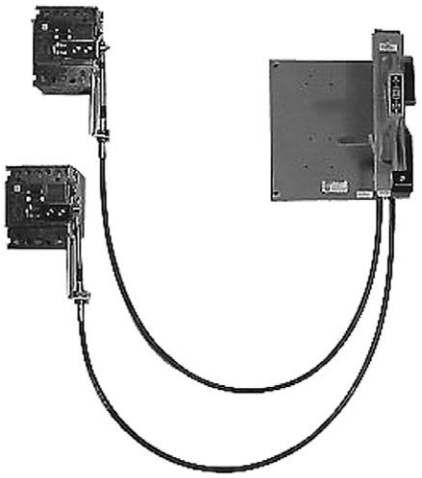

Dual Cable Operating Mechanisms for Square D™ Circuit Breakers

Dual cable operator mechanisms are designed for use with Square D GJL circuit breakers. The cable mechanisms allow for a single handle operator, Class 9422A1, to operate both circuit breakers. The cable mechanism is designed especially for tall, deep enclosures where placement flexibility is required. There are numerous cable arrangements to choose from to accommodate many applications.

Features

- Separate cables for each circuit breaker
- Rugged metal flange handle operator
- Maximized flexibility of circuit breaker placement for existing and new applications
- Control panel can be fed from two separate supply voltages (if required)
- Dual mechanism allows both separate supply voltages to be controlled by a single handle to improve security features

Table 15.36: Dual Cable Operating Mechanisms Selection

Circuit Breaker Type	Cable Length in. / mm (quantity)	Catalog Number	Frame Size (max.)
GJL	36 in. / 914 mm (2)	9422CGJD3	100 A
	48 in. / 1219 mm (2)	9422CGJD4	
	60 in. / 1524 mm (2)	9422CGJD5	
	120 in. / 3048 mm (2)	9422CGJD1 *[1]*	
	36 in. / 914 mm (1) 60 in. / 1524 mm (1)	9422CGJD8 *[1]*	
	60 in. / 1524 mm (1) 120 in. / 3048 mm (1)	9422CGJD9 *[1]*	

Table 15.37: Special Left-hand Mounted Single Cable Operating Mechanisms

Circuit Breaker Type	Cable Length in. / mm (quantity)	Catalog Number	Frame Size (max.)
FAL	120 in. / 3048 mm (1)	9422CFAL10	100 A
	36 in. / 914 mm (1)	9422CFAL30	
	60 in. / 1524 mm (1)	9422CFAL50	

[1] Obsolete.

© 2017 Schneider Electric
All Rights Reserved
2/15/2017

Variable-Depth Mechanisms

Designed for installation in custom built control enclosures where main or branch circuit protective devices are required. All circuit breaker operating mechanisms are suitable for either right- or left-hand flange mounting, convertible on the job.

Table 15.38: Variable-Depth Mechanisms for Use with Square D™ Circuit Breakers and Schneider Electric™ (formerly Merlin Gerin™) Circuit Breakers

Use With				Operating Mechanism		
				Operating Mechanism Only—Does Not Include Handle Mechanism	Operating Mechanism and Handle Mechanism	
					Includes Type A1 Handle Mechanism	Includes Type A2 Handle Mechanism
Circuit Breaker Frame Size	No. of Poles	Frame Size A	Variable-Depth Mounting. Range [1] (in.)	Type	Type	Type
Square D Circuit Breakers						
GJL	3	100	6.00–17.75	RG1	ARG11	ARG21
FAL, FHL	2–3	100	5.38–17.75	RN1	ARN11	ARN21
KAL, KHL	2–3	250	6.38–17.88	RP1	ARP11	ARP21
LAL [2], LHL [2], Q4L	2–3	400	7.44–18.25	RR1	ARR11	ARR21
MEL, MXL	2–3	800	9.00–18.38	RT1	ART11	ART21
MAL, MHL	2–3	1200	9.00–18.38	RT1	ART11	ART21
NAL, NCL, NEL, NXL	2–3	1200	11.00–18.37	RX1	—	—

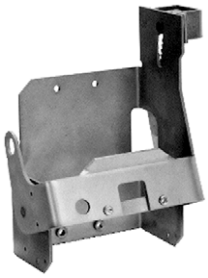

Table 15.39: Electrical Interlocks—Class 9999

Description	Class	Type
Single Pole, Double Throw	9999	R26 [3]
Double Pole, Double Throw	9999	R27 [3]

Table 15.40: Dimensions

Circuit Breaker Frame Size	Type	Width (A)		Height (B)		Distance to Enclosure Flange [4] (C)				Bracket Depth (D)	
						Minimum		Maximum			
		in.	mm	in.	mm	in.	mm	in.	mm	in.	mm
GJL	RG1	5.00	127	4.75	121	6.00	152	17.75	451	4.00	102
FAL, FHL	RN1	6.75	171	8.50	216	5.51	140	17.75	451	4.26	108
KAL, KHL	RP1	7.13	181	10.13	257	6.51	165	17.88	454	4.94	125
LAL [2], LHL [2], Q4L	RR1	10.19	259	11.00	279	7.44	189	18.25	464	6.00	152
MEL, MXL	RT1	13.38	340	14.00	356	9.00	229	18.38	467	9.69	246
MAL, MHL[5]	RT1	13.38	340	14.00	356	9.00	229	18.38	467	9.69	246
NAL, NCL, NEL, NXL	RX1	19.63	499	13.50	343	11.00	279	18.37	467	9.00	229

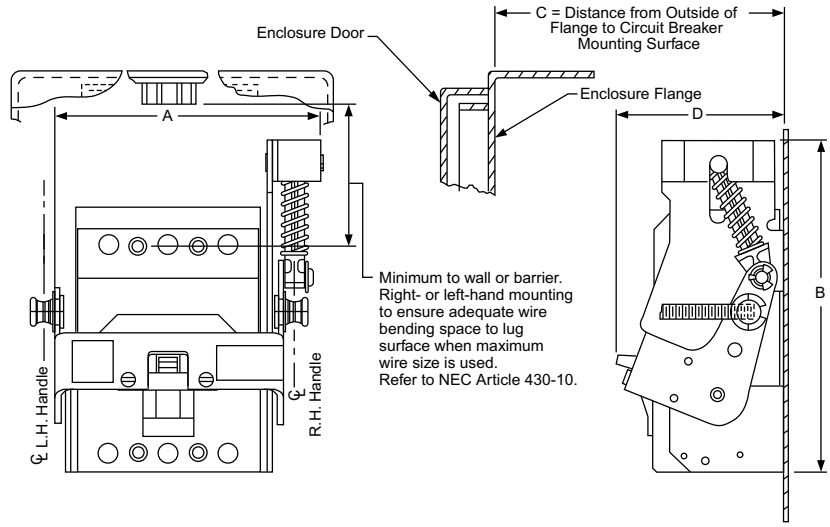

[1] Class 9422 Type R2 extends the mounting depth by 7 in.
[2] These operating mechanisms cannot be used with any LA/LH circuit breakers with an MB or MT suffix.
[3] Not for use with the GJL operating mechanism.
[4] 9422R2 extends the dimension by 7 in. Two are required.
[5] The minimum mounting depth when using MAL or MHL circuit breakers can be decreased to 7.63 in. by using the Class 9422 Type RT1B conversion kit.

© 2017 Schneider Electric
All Rights Reserved

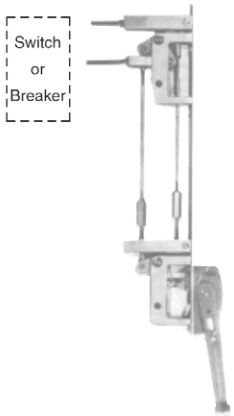

Remote operation shown (the handle mechanism is not included in the kit)

Air valve interlock mounted on the enclosure

Channel/Flange Support Kit

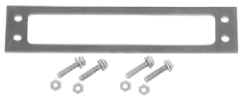

Alternate Mounting Kit

Auxiliary Lock Plate

Remote or Dual Adapter Kit

For the remote or dual operation of GJL, FAL, FHL, KAL, KHL, LAL, LHL, Q4L, MAL, MHL, MEL, and MXL circuit breakers.

Remote Operation—permits mounting the Class 9422 Type A9 or A10 handle mechanism at a lower level than the disconnect device it controls. This arrangement is often required where the disconnect device is mounted too high for personnel to easily reach a conventional operator.

Dual Operation—permits controlling two disconnect devices, one in line with, and one remote from, a single Class 9422 Type A9 or A10 handle mechanism.

NOTE: A Class 9422 Type A9 or A10 handle (see Digest 177, Section 8) and the preferred mounting method **must** be used.

Table 15.41: Disconnect Device

Disconnect Device	Enclosure Mounting Depth		Type
	Min.	Max.	
Circuit Breaker			
GJL	10.50	19.50	D2
FAL, FHL	10.66	19.50	
KAL, KHL	11.13	19.50	
LAL, LHL, Q4L	12.13	19.88	
MAL, MHL,MEL, MXL	13.75	20.25	

Table 15.42: Air Valve Interlock

NOTE: Air valve interlocks only accept the specific three-way air valves, manufactured by Parker, listed in the table below.

Parker Valve Model Number *[6]*		Class 9422 Air Valve Interlock
Air Valve Size	Knob Operated	Type
0.50 in. NPT (13)	M04841885	G1
	M08541848	
0.75 in. NPT (19)	M04861885	G2
	M08561848	
1.00 in. NPT (25)	M00080004	G1

Table 15.43: Other Accessories

Accessory	Description	Class	Type
Channel/Flange Support Kit	Auxiliary kit recommended for use with 30 A and 60 A disconnect switches and FAL, FCL, FHL, KAL KHL, NSF, and NSJ circuit breaker mechanisms when these devices are to be mounted on the center channel of a multi-door enclosure or when extra rigidity for the flange is required. Supplied as standard with 100 A and 200 A disconnect switches and LAL, LHL, Q4L, MAL, MHL, MEL, and MXL circuit breaker mechanisms.	9422	C1

[6] **Prices do not include air valves or the handle mechanism.** For more information on the air valves listed, contact Parker at c-parker@parker.com, or call 1-800-272-7537.

© 2017 Schneider Electric
All Rights Reserved
2/15/2017

Section 16

Contactors and Starters

Electromechanical
Reduced Voltage Starter

Reversing Drum Switches	16-2
Electromechanical Reduced Voltage Starters	16-3
Multispeed Magnetic Starters	16-9
Lighting Contactors	16-15
Well-Guard™ Pump Panel	16-16
Factory Modifications (Forms)	16-18
Definite Purpose Contactors	16-21
Thermal Overload Relays—NEMA Style	16-22

© 2017 Schneider Electric
All Rights Reserved

Type AG2

NEMA 1, 3R, 4, and 13 Without Overload

Class 2601 reversing drum switches may be used for across-the-line starting and reversing of AC polyphase, AC single phase or DC motors, where overload protection is not required or is provided separately. They are compact and inexpensive but ruggedly constructed. Drum switches are field convertible from Maintained-On to Momentary-On operation. This conversion consists of removing the handle screw and handle, turning the shaft 180 degrees, then replacing the handle and handle screw.

Table 16.1: Reversing Drum Switches

600 Vac Maximum				Class 2601		360 Vdc Maximum	
Ratings				NEMA Type 1 General Purpose Enclosure	NEMA Type 4 Watertight & Dusttight Enclosure	NEMA Type 1 Maintained & Momentary *[1]*	NEMA Type 13 Oiltight Flush Mounting
Voltage	Maximum Horsepower						
	AC Single Phase	AC Poly-Phase	DC	Type	Type	Type	Type
115- 200/230 230 460/575	1-1/2 — 2 —	— 2 — 2	1/4 — 1/4 —	AG2	AW2	AG2S2	AF2
115- 200/230 230 460/575	1-1/2 — 3 5	— 5 — 7-1/2	2 — 2 —	BG1	BW1	—	—

File E42243
CCN NLRV

File LR25490
Class 3211-05

Type AW2

Approximate Dimensions—Class 2601 Reversing Drum Switches

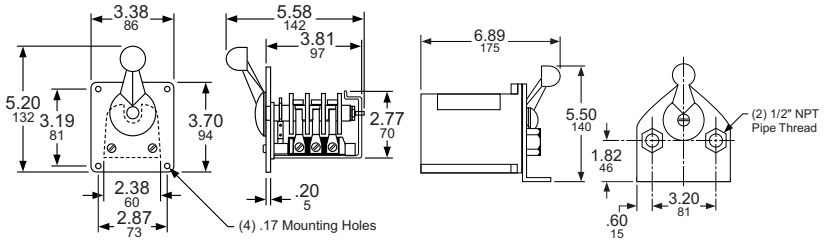

Type AF2

Types AW and BW

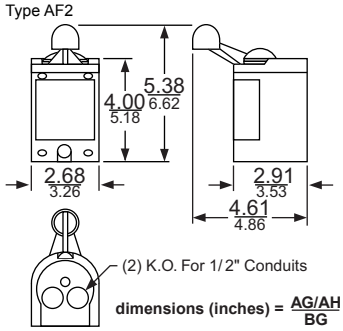

dimensions (inches) = AG/AH / BG

Dimensions: in. / mm

Types AG, BG

Table 16.2: How to Order

To Order Specify:	Catalog Number	
• Class Number	Class	Type
• Type Number	2601	AG2

[1] Maintained—Forward, Momentary—Reverse (not field convertible)

© 2017 Schneider Electric
All Rights Reserved
2/15/2017

Reduced Voltage Starting of Squirrel Cage Motors

A squirrel cage motor draws high starting current (inrush) and produces high starting torque when started at full voltage. While these values differ for different motor designs, for a typical NEMA design B motor, the inrush will be approximately 600% of the motor full load amperage (FLA) rating, and the starting torque will be approximately 150% of full load torque at full voltage. High current inrush and starting torque can cause problems in the electrical and mechanical systems, or may even damage the materials being processed.

When a motor is started at reduced voltage, the current at the motor terminals is reduced in direct proportion to the voltage reduction, while the torque is reduced by the square of the voltage reduction. If the "typical" NEMA B motor is started at 70% of line voltage, the starting current would be 70% of the full voltage value (that is, 0.70 x 600% = 420% FLA). The torque would then be $(0.70)^2$ or 49% of the normal starting torque (that is, 0.49 x 150% = 74% full load torque). Therefore, reduced voltage starting provides an effective means of reducing both inrush current and starting torque.

If the motor has a high inertia or if the motor rating is marginal for the applied load, reducing the starting torque may prevent the motor from reaching full speed before the thermal overload relays trip. Applications that require high starting torque should be reviewed to determine if reduced voltage starting is suitable.
Square D™ offers several types of electromechanical as well as solid-state reduced voltage starters that provide different starting characteristics. The following describes the 8600 series of reduced voltage starters.

Electromechanical Reduced Voltage Starters

Class 8606—Autotransformer Starter: Autotransformer starters provide reduced voltage to the motor terminals during starting through the use of a tapped, three phase autotransformer. Taps on the autotransformer allow for selection of the motor with 50%, 65%, or 80% of line voltage values supplying 50%, 65%, or 80% of the current inrush seen during a full voltage start. The resulting starting torque will be 25%, 42%, or 64% of full voltage values, as will be the current draw on the line. Thus, the autotransformer provides the maximum torque with minimum line current.

Class 8630—Wye-Delta Starter: Wye-delta starters can only be used on wye-delta motors which have six leads that allow for motor winding to be connected in either a wye or delta configuration. During start up, the windings are connected in the wye, resulting in 58% of line voltage applied across two windings. This reduces both inrush and starting torque to 33% of the delta connected values. After a set time delay, the motor leads are switched to the delta connection. The wye-delta starter is available in both open and closed transition configurations. Closed transition starters are supplied with an additional contactor and resistor bank used to keep the motor windings energized for a few cycles until the transition from wye to delta is complete.

Class 8640—Part Winding Starter: Part winding starters can be used only with part winding motors. During a part winding start, only one winding is energized, reducing the inrush current to 60–70% (depending on the motor design) and starting torque to 50% of normal starting values with both windings energized. Most (but not all) dual voltage 230/460 volt motors are suitable for part winding starts at 230 volts.

Specifications

Table 16.3: Starter Characteristics

Characteristic	Full Voltage	Autotransformer, Class 8606	Wye-Delta Class, 8630	Part Winding, Class 8640	Solid-State ATS46
Voltage at Motor	100%	50% / 65% / 80% (tap setting)	100%	100%	Ramped Up
Line Current (% Full Load Current)	600%	150% / 250% / 380%	200%	390%	150% to 700% (adjustable)
Starting Torque (% Rated Torque)	150%	40% / 60% / 100%	50%	70%	0% to 100% (adjustable)
Start Time (Factory Setting)	—	6–7 s	10 s / 15 s (open/closed transition)	1–1.5 s	10 s (adjustable 1–60 s)
Advantages	• Simple • Economical • High Starting Torque	• High torque/amperage • High inertial loads • Flexibility	• High inertial loads • Long acceleration loads • Good torque/amperage	• Simple • Small size	• Greatest flexibility • Smooth ramp • Solid-state overload relay • Diagnostics
Disadvantages	• Abrupt starts • Large current inrush	• Large size	• Low torque • No flexibility	Not suitable for: • High inertial loads • Frequent starting	• SCR heat dissipation • Ambient limitations
Motor	Standard	Standard	Special	Special	Standard

Table 16.4: Line Voltage Codes (60 Hz)

Line	Control	Code
208	208	V08
240	240	V03
380	380	V05
480	480	V06
600	600	V07

Table 16.5: Coil Voltage Codes (60 Hz)

Line	Control	Code
208	120	V84
240	24	V82
240	120	V80
480	24	V83
480	120	V81
480	240	V87
600	120	V86
380	110/50	V95
other	specify	V99

Table 16.6: Form Codes

Form Description	Form Code
Fused CPT for timing relay only	F4T
Fused CPT for all coils	F4T40
Separate control of timing relay only	S
Separate control for all coils	Y195

How to Order

NOTE: Table 16.4 and Table 16.5 are for 60 Hz; for 50 Hz codes, see Table 16.8.

1. Specify the Class Number and the Type Number.
2. If all coils are at the line voltage, and not Sizes 6 or 7, select the voltage code from Table 16.4 (Sizes 6 and 7 are supplied with a fused transformer with 120 Vac as standard).
3. If the coils are at a different voltage than line supply, or Size 6 or 7, select a voltage code from Table 16.5 and also select a Form code from Table 16.6 (note that a Form code may be used with any voltage code, except as noted).

See Table 16.7 for sizing of 380 V starters.

24 V coils are not available on Sizes 4–7.

Factory Modifications (Forms): see Factory Modifications (Forms), page 16-18.

380 Vac, 50 Hz Starters

The Class 8600 starters are available for 380 Vac, 50 Hz applications. Table 16.7 provides maximum horsepower ratings. To determine the Type number, select the second digit based on the NEMA size. Select the fifth digit based on the horsepower requirement. Specify V05 voltage code.

Table 16.7: 380 Vac, 50 Hz Starters, Maxiumum Horsepower Rating

Autotransformer, Class 8606		Wye-Delta, Class 8630		Part Winding, Class 8640	
Max. hp	NEMA Size	Max. hp	NEMA Size	Max. hp	NEMA Size
—	—	15	1YD	15	1PW
25	2	40	2YD	40	2PW
50	3	75	3YD	75	3PW
75	4	150	4YD	125	4PW
150	5	250	5YD	250	5PW
300	6	500	6YD	500	6PW

50 Hz Control Voltage

The starters in this section can also be operated at 50 Hz at the coil voltages listed in Table 16.8. For additional coil voltage availability, contact the Customer Care Center (CCC) at 1-888-778-2733.

Table 16.8: Coil Voltage Codes (50 Hz)

Hz	V	Code	V	Code	V	Code	V	Code
60	120	V02	240	V03	480	V06	600	V07
50	110		220		440		550	

© 2017 Schneider Electric
All Rights Reserved

Selection, 3-Pole Polyphase

NOTE: Devices require 3 thermal units (Sizes 00–6). See Digest Section 16 for selection information.

Table 16.9: 3-Pole Polyphase, 600 Vac Maximum, 50–60 Hz

Motor Voltage (Starter Voltage)	Max. Hp	NEMA Size	NEMA Type 1 General Purpose Enclosure	NEMA Type 4 *[1]* Watertight and Dusttight Enclosure	NEMA Type 12/3R *[2]* Dusttight & Driptight Industrial Use Enclosure	Open Type	OEM Kit *[3]*
			Type *[4]*	Type *[4]*	Type *[4]*	Type *[4]*	Type *[4]*
200 (208)	10	2	SDG1C	SDW1C	SDA1C	SDO1C	SDK1C
	15 20 25	3	SEG1D SEG1E SEG1F	SEW1D SEW1E SEW1F	SEA1D SEA1E SEA1F	SEO1D SEO1E SEO1F	SEK1D SEK1E SEK1F
	30 40	4	SFG1G SFG1H	SFW1G SFW1H	SFA1G SFA1H	SFO1G SFO1H	SFK1G SFK1H
	50 75	5	SGG1J SGG1L	SGW1J SGW1L	SGA1J SGA1L	SGO1J SGO1L	SGK1J SGK1L
	100 125 150	6	SHG1M SHG1N SHG1P	SHW1M SHW1N SHW1P	SHA1M SHA1N SHA1P	SHO1M SHO1N SHO1P	SHK1M SHK1N SHK1P
230 (240)	10 15	2	SDG1C SDG1D	SDW1C SDW1D	SDA1C SDA1D	SDO1C SDO1D	SDK1C SDK1D
	20 25 30	3	SEG1E SEG1F SEG1G	SEW1E SEW1F SEW1G	SEA1E SEA1F SEA1G	SEO1E SEO1F SEO1G	SEK1E SEK1F SEK1G
	40 50	4	SFG1H SFG1J	SFW1H SFW1J	SFA1H SFA1J	SFO1H SFO1J	SFK1H SFK1J
	75 100	5	SGG1L SGG1M	SGW1L SGW1M	SGA1L SGA1M	SGO1L SGO1M	SGK1L SGK1M
	125 150 200	6	SHG1N SHG1P SHG1Q	SHW1N SHW1P SHW1Q	SHA1N SHA1P SHA1Q	SHO1N SHO1P SHO1Q	SHK1N SHK1P SHK1Q
	250 300	7	SJG1R SJG1S	SJW1R SJW1S	SJA1R SJA1S	—	—
460 (480) / 575 (600)	10 15 20 25	2	SDG1C SDG1D SDG1E SDG1F	SDW1C SDW1D SDW1E SDW1F	SDA1C SDA1D SDA1E SDA1F	SDO1C SDO1D SDO1E SDO1F	SDK1C SDK1D SDK1E SDK1F
	30 40 50	3	SEG1G SEG1H SEG1J	SEW1G SEW1H SEW1J	SEA1G SEA1H SEA1J	SEO1G SEO1H SEO1J	SEK1G SEK1H SEK1J
	60 75 100	4	SFG1K SFG1L SFG1M	SFW1K SFW1L SFW1M	SFA1K SFA1L SFA1M	SFO1K SFO1L SFO1M	SFK1K SFK1L SFK1M
	125 150 200	5	SGG1N SGG1P SGG1Q	SGW1N SGW1P SGW1Q	SGA1N SGA1P SGA1Q	SGO1N SGO1P SGO1Q	SGK1N SGK1P SGK1Q
	250 300 400	6	SHG1R SHG1S SHG1T	SHW1R SHW1S SHW1T	SHA1R SHA1S SHA1T	SHO1R SHO1S SHO1T	SHK1R SHK1S SHK1T
	500 600	7	SJG1U SJG1W	SJW1U SJW1W	SJA1U SJA1W	SJO1W	—

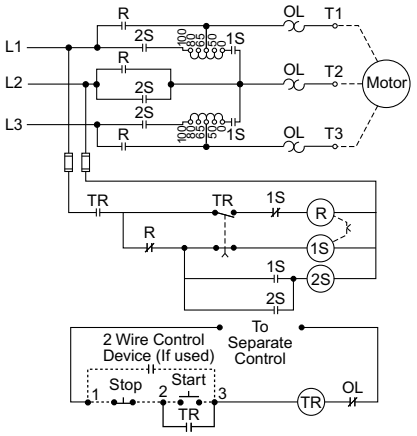

Typical Autotransformer Starter
Sizes 2–5
Separate Control (Form S)

NOTE: Class 8606 starters come with a NEMA style medium-duty autotransformer. Medium-duty service includes applications to motors that drive loads such as fans, pumps, compressors, and line shafts.
NEMA Sizes 2–5: Autotransformer is rated for fifteen 15-second starts per hour.
NEMA Sizes 6–7: Autotransformer is rated for three 30-second starts per hour.
Contact the Customer Care Center (CCC) at 1-888-778-2733 for applications that require frequent starting or jogging, or have extremely high inertia.

Table 16.10: How to Order

To Order Specify:	Catalog Number			
	Class	Type	Voltage Code	Form(s)
• Class Number • Type Number • Voltage Code • Form(s) *[5]*	8606	SFG1M	V81	S
	Description: 100 hp, 480 V line, 120 V separate control, 60 Hz			

[1] NEMA 4 enclosures are painted sheet steel. Where required, stainless steel enclosures are available at extra cost.Specify as **Form G17**.
[2] NEMA Type 12 enclosures can be field modified for outdoor non-corrosive and non–service-entrance rated applications. See Digest Section 16 for more information.
[3] No factory modifications (Forms) are available with the OEM. kit.
[4] Both the line and control voltage must be specified to order this product. See page 16-3 for the necessary codes and instructions for ordering.
[5] Specify Forms only if any of the coils are at a different voltage than line supply (V8•). See page 16-3 for a fuller explanation of how to order; this page also provides the necessary coil voltage and Form codes as well as codes for 380 V starters and 50 Hz applications.

© 2017 Schneider Electric
All Rights Reserved

Selection, 3-Pole Polyphase

NOTE: Devices require 3 thermal units (Sizes 00–6). See Digest Section 16 for selection information.

Table 16.11: 3-Pole Polyphase, 600 Vac Maximum, 50–60 Hz

Motor Voltage (Starter Voltage)	Max. Hp	NEMA Size	NEMA Type 1 General Purpose Enclosure	NEMA Type 4 *[6]* Watertight and Dusttight Enclosure (Stainless Steel 1YD-4YD)	NEMA Type 12/3R *[7]* Dusttight & Driptight Industrial Use Enclosure	Open Type	OEM Kit *[8]*
			Type *[9]*	Type *[9]*	Type *[9]*	Type *[9]*	Type *[9]*
200 (208)	10	1YD	SCG1C	SCW1C	SCA1C	SCO1C	—
	15 20	2YD	SDG1D SDG1E	SDW1D SDW1E	SDA1D SDA1E	SDO1D SDO1E	—
	25 30 40	3YD	SEG1F SEG1G SEG1H	SEW1F SEW1G SEW1H	SEA1F SEA1G SEA1H	SEO1F SEO1G SEO1H	SEK1F SEK1G SEK1H
	50 60	4YD	SFG1J SFG1K	SFW1J SFW1K	SFA1J SFA1K	SFO1J SFO1K	SFK1J SFK1K
	75 100 125 150	5YD	SGG1L SGG1M SGG1N SGG1P	SGW1L SGW1M SGW1N SGW1P	SGA1L SGA1M SGA1N SGA1P	SGO1L SGO1M SGO1N SGO1P	SGK1L SGK1M SGK1N SGK1P
	200 250 300	6YD	SHG1Q SHG1R SHG1S	SHW1Q SHW1R SHW1S	SHA1Q SHA1R SHA1S	SHO1Q SHO1R SHO1S	SHK1Q SHK1R SHK1S
230 (240)	10	1YD	SCG1C	SCW1C	SCA1C	SCO1C	—
	15 20 25	2YD	SDG1D SDG1E SDG1F	SDW1D SDW1E SDW1F	SDA1D SDA1E SDA1F	SDO1D SDO1E SDO1F	—
	30 40 50	3YD	SEG1G SEG1H SEG1J	SEW1G SEW1H SEW1J	SEA1G SEA1H SEA1J	SEO1G SEO1H SEO1J	SEK1G SEK1H SEK1J
	60 75	4YD	SFG1K SFG1L	SFW1K SFW1L	SFA1K SFA1L	SFO1K SFO1L	SFK1K SFK1L
	100 125 150	5YD	SGG1M SGG1N SGG1P	SGW1M SGW1N SGW1P	SGA1M SGA1N SGA1P	SGO1M SGO1N SGO1P	SGK1M SGK1N SGK1P
	200 250 300	6YD	SHG1Q SHG1R SHG1S	SHW1Q SHW1R SHW1S	SHA1Q SHA1R SHA1S	SHO1Q SHO1R SHO1S	SHK1Q SHK1R SHK1S
	400 500	7YD	SJG1T SJG1U	SJW1T SJW1U	SJA1T SJA1U	SJO1T SJO1U	—
460 (480) / 575 (600)	10 15	1YD	SCG1C SCG1D	SCW1C SCW1D	SCA1C SCA1D	SCO1C SCO1D	—
	20 25 30 40	2YD	SDG1E SDG1F SDG1G SDG1H	SDW1E SDW1F SDW1G SDW1H	SDA1E SDA1F SDA1G SDA1H	SDO1E SDO1F SDO1G SDO1H	—
	50 60 75	3YD	SEG1J SEG1K SEG1L	SEW1J SEW1K SEW1L	SEA1J SEA1K SEA1L	SEO1J SEO1K SEO1L	SEK1J SEK1K SEK1L
	100 125 150	4YD	SFG1M SFG1N SFG1P	SFW1M SFW1N SFW1P	SFA1M SFA1N SFA1P	SFO1M SFO1N SFO1P	SFK1M SFK1N SFK1P
	200 250 300	5YD	SGG1Q SGG1R SGG1S	SGW1Q SGW1R SGW1S	SGA1Q SGA1R SGA1S	SGO1Q SGO1R SGO1S	SGK1Q SGK1R SGK1S
	400 500 600	6YD	SHG1T SHG1U SHG1W	SHW1T SHW1U SHW1W	SHA1T SHA1U SHA1W	SHO1T SHO1U SHO1W	SHK1T SHK1U SHK1W
	800 1000	7YD	SJG1Y SJG1Z	SJW1Y SJW1Z	SJA1Y SJA1Z	SJO1Y SJO1Z	—

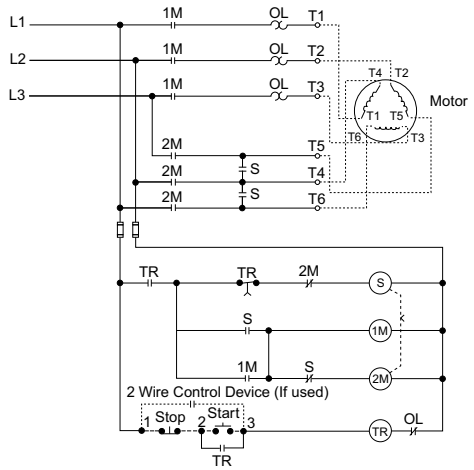

Typical Wye-Delta Starter Sizes 1–4 (Open Transition) Common Control (Standard)

Table 16.12: How to Order

To Order Specify:	Catalog Number			
	Class	Type	Voltage Code	Form(s)
• Class Number • Type Number • Voltage Code • Form(s) *[10]*	8630	SFG1M	V06	
	Description: 100 hp, 480 V line, 480 V common control, 60 Hz			

[6] NEMA 4 enclosures are painted sheet steel. Where required, stainless steel enclosures are available at extra cost.Specify as **Form G17**.
[7] NEMA Type 12 enclosures can be field modified for outdoor non-corrosive and non–service-entrance rated applications. See Digest Section 16 for more information.
[8] No factory modifications (Forms) are available with the OEM. kit.
[9] Both the line and control voltage must be specified to order this product. See page 16-3 for the necessary codes and instructions for ordering.
[10] Specify Forms only if any of the coils are at a different voltage than line supply (V8•). See page 16-3 for a fuller explanation of how to order; this page also provides the necessary coil voltage and Form codes as well as codes for 380 V starters and 50 Hz applications.

© 2017 Schneider Electric
All Rights Reserved

Selection, 3-Pole Polyphase

NOTE: Devices require 3 thermal units (Sizes 00–6). See Digest Section 16 for selection information.

Table 16.13: 3-Pole Polyphase, 600 Vac Maximum, 50–60 Hz

Motor Voltage (Starter Voltage)	Max. Hp	NEMA Size	NEMA Type 1 General Purpose Enclosure	NEMA Type 4 *[11]* Watertight and Dusttight Enclosure (Stainless Steel 1YD-4YD)	NEMA Type 12/3R *[12]* Dusttight & Driptight Industrial Use Enclosure	Open Type	OEM Kit *[13]*
			Type *[14]*	Type *[14]*	Type *[14]*	Type *[14]*	Type *[14]*
200 (208)	10	1YD	SCG2C	SCW2C	SCA2C	SCO2C	—
	15 20	2YD	SDG2D SDG2E	SDW2D SDW2E	SDA2D SDA2E	SDO2D SDO2E	—
	25 30 40	3YD	SEG2F SEG2G SEG2H	SEW2F SEW2G SEW2H	SEA2F SEA2G SEA2H	SEO2F SEO2G SEO2H	SEK2F SEK2G SEK2H
	50 60	4YD	SFG2J SFG2K	SFW2J SFW2K	SFA2J SFA2K	SFO2J SFO2K	SFK2J SFK2K
	75 100 125 150	5YD	SGG2L SGG2M SGG2N SGG2P	SGW2L SGW2M SGW2N SGW2P	SGA2L SGA2M SGA2N SGA2P	SGO2L SGO2M SGO2N SGO2P	SGK2L SGK2M SGK2N SGK2P
	200 250 300	6YD	SHG2Q SHG2R SHG2S	SHW2Q SHW2R SHW2S	SHA2Q SHA2R SHA2S	SHO2Q SHO2R SHO2S	SHK2Q SHK2R SHK2S
230 (240)	10	1YD	SCG2C	SCW2C	SCA2C	SCO2C	—
	15 20 25	2YD	SDG2D SDG2E SDG2F	SDW2D SDW2E SDW2F	SDA2D SDA2E SDA2F	SDO2D SDO2E SDO2F	— — —
	30 40 50	3YD	SEG2G SEG2H SEG2J	SEW2G SEW2H SEW2J	SEA2G SEA2H SEA2J	SEO2G SEO2H SEO2J	SEK2G SEK2H SEK2J
	60 75	4YD	SFG2K SFG2L	SFW2K SFW2L	SFA2K SFA2L	SFO2K SFO2L	SFK2K SFK2L
	100 125 150	5YD	SGG2M SGG2N SGG2P	SGW2M SGW2N SGW2P	SGA2M SGA2N SGA2P	SGO2M SGO2N SGO2P	SGK2M SGK2N SGK2P
	200 250 300	6YD	SHG2Q SHG2R SHG2S	SHW2Q SHW2R SHW2S	SHA2Q SHA2R SHA2S	SHO2Q SHO2R SHO2S	SHK2Q SHK2R SHK2S
	400 500	7YD	SJG2T SJG2U	SJW2T SJW2U	SJA2T SJA2U	SJO2T SJO2U	— —
460 (480) / 575 (600)	10 15	1YD	SCG2C SCG2D	SCW2C SCW2D	SCA2C SCA2D	SCO2C SCO2D	— —
	20 25 30 40	2YD	SDG2E SDG2F SDG2G SDG2H	SDW2E SDW2F SDW2G SDW2H	SDA2E SDA2F SDA2G SDA2H	SDO2E SDO2F SDO2G SDO2H	— — — —
	50 60 75	3YD	SEG2J SEG2K SEG2L	SEW2J SEW2K SEW2L	SEA2J SEA2K SEA2L	SEO2J SEO2K SEO2L	SEK2J SEK2K SEK2L
	100 125 150	4YD	SFG2M SFG2N SFG2P	SFW2M SFW2N SFW2P	SFA2M SFA2N SFA2P	SFO2M SFO2N SFO2P	SFK2M SFK2N SFK2P
	200 250 300	5YD	SGG2Q SGG2R SGG2S	SGW2Q SGW2R SGW2S	SGA2Q SGA2R SGA2S	SGO2Q SGO2R SGO2S	SGK2Q SGK2R SGK2S
	400 500 700	6YD	SHG2T SHG2U SHG2W	SHW2T SHW2U SHW2W	SHA2T SHA2U SHA2W	SHO2T SHO2U SHO2W	SHK2T SHK2U SHK2W
	800 1000	7YD	SJG2Y SJG2Z	SJW2Y SJW2Z	SJA2Y SJA2Z	SJO2Y SJO2Z	— —

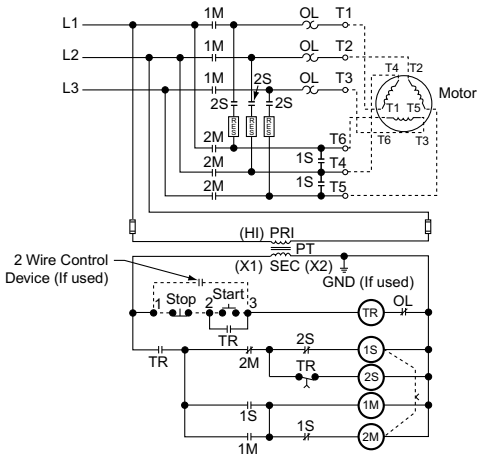

Typical Wye-Delta Starter
Sizes 1–4 (Closed Transition)
Fused Control Transformer (Form F4T40)

Table 16.14: How to Order

To Order Specify:	Catalog Number			
	Class	Type	Voltage Code	Form(s)
• Class Number • Type Number • Voltage Code • Form(s) *[15]*	8630	SFG1M	V81	F4T40
	Description: 100 hp, 480 V line, 120 V separate control, 60 Hz			

[11] NEMA 4 enclosures are painted sheet steel. Where required, stainless steel enclosures are available at extra cost.Specify as **Form G17**.
[12] NEMA Type 12 enclosures can be field modified for outdoor non-corrosive and non–service-entrance rated applications. See Digest Section 16 for more information.
[13] No factory modifications (Forms) are available with the OEM. kit.
[14] Both the line and control voltage must be specified to order this product. See page 16-3 for the necessary codes and instructions for ordering.
[15] Specify Forms only if any of the coils are at a different voltage than line supply (V8•). See page 16-3 for a fuller explanation of how to order; this page also provides the necessary coil voltage and Form codes as well as codes for 380 V starters and 50 Hz applications.

© 2017 Schneider Electric
All Rights Reserved

Part Winding Starters, Selection

NOTE: Devices require 6 thermal units (Sizes 00–6). See Digest Section 16 for selection information.

Table 16.15: 3-Pole Polyphase—600 Vac Maximum—50–60 Hz

Motor Voltage (Starter Voltage)	Max. Hp	NEMA Size	NEMA Type 1 General Purpose Enclosure	NEMA Type 4 *[16]* Watertight and Dusttight Enclosure (Stainless Steel 1PW–4PW)	NEMA Type 12/3R *[17]* Dusttight & Driptight Industrial Use Enclosure	Open Type	OEM Kit *[18]*
			Type *[19]*	Type *[19]*	Type *[19]*	Type *[19]*	Type *[19]*
200 (208)	10	1PW	SCG1C	SCW1C	SCA1C	SCO1C	—
	15 20	2PW	SDG1D SDG1E	SDW1D SDW1E	SDA1D SDA1E	SDO1D SDO1E	SDK1D SDK1E
	25 30 40	3PW	SEG1F SEG1G SEG1H	SEW1F SEW1G SEW1H	SEA1F SEA1G SEA1H	SEO1F SEO1G SEO1H	SEK1F SEK1G SEK1H
	50 60 75	4PW	SFG1J SFG1K SFG1L	SFW1J SFW1K SFW1L	SFA1J SFA1K SFA1L	SFO1J SFO1K SFO1L	SFK1J SFK1K SFK1L
	100 125 150	5PW	SGG1M SGG1N SGG1P	SGW1M SGW1N SGW1P	SGA1M SGA1N SGA1P	SGO1M SGO1N SGO1P	SGK1M SGK1N SGK1P
230 (240)	10	1PW	SCG1C	SCW1C	SCA1C	SCO1C	—
	15 20 25	2PW	SDG1D SDG1E SDG1F	SDW1D SDW1E SDW1F	SDA1D SDA1E SDA1F	SDO1D SDO1E SDO1F	SDK1D SDK1E SDK1F
	30 40 50	3PW	SEG1G SEG1H SEG1J	SEW1G SEW1H SEW1J	SEA1G SEA1H SEA1J	SEO1G SEO1H SEO1J	SEK1G SEK1H SEK1J
	60 75	4PW	SFG1K SFG1L	SFW1K SFW1L	SFA1K SFA1L	SFO1K SFO1L	SFK1K SFK1L
	100 125 150	5PW	SGG1M SGG1N SGG1P	SGW1M SGW1N SGW1P	SGA1M SGA1N SGA1P	SGO1M SGO1N SGO1P	SGK1M SGK1N SGK1P
	200 250 300	6PW	SHG1Q SHG1R SHG1S	SHW1Q SHW1R SHW1S	SHA1Q SHA1R SHA1S	SHO1Q SHO1R SHO1S	—
	400	7PW	SJG1T	SJW1T	SJA1T	SJO1T	—
460 (480) / 575 (600)	10 15	1PW	SCG1C SCG1D	SCW1C SCW1D	SCA1C SCA1D	SCO1C SCO1D	— —
	20 25 30 40	2PW	SDG1E SDG1F SDG1G SDG1H	SDW1E SDW1F SDW1G SDW1H	SDA1E SDA1F SDA1G SDA1H	SDO1E SDO1F SDO1G SDO1H	SDK1E SDK1F SDK1G SDK1H
	50 60 75	3PW	SEG1J SEG1K SEG1L	SEW1J SEW1K SEW1L	SEA1J SEA1K SEA1L	SEO1J SEO1K SEO1L	SEK1J SEK1K SEK1L
	100 125 150	4PW	SFG1M SFG1N SFG1P	SFW1M SFW1N SFW1P	SFA1M SFA1N SFA1P	SFO1M SFO1N SFO1P	SFK1M SFK1N SFK1P
	200 250 350	5PW	SGG1Q SGG1R SGG1S	SGW1Q SGW1R SGW1S	SGA1Q SGA1R SGA1S	SGO1Q SGO1R SGO1S	SGK1Q SGK1R SGK1S
460 (480) / 575 (600)	400 500 600	6PW	SHG1T SHG1U SHG1W	SHW1T SHW1U SHW1W	SHA1T SHA1U SHA1W	SHO1T SHO1U SHO1W	—
	700 800	7PW	SJG1X SJG1Y	SJW1X SJW1Y	SJA1X SJA1Y	SJO1X SJO1Y	— —

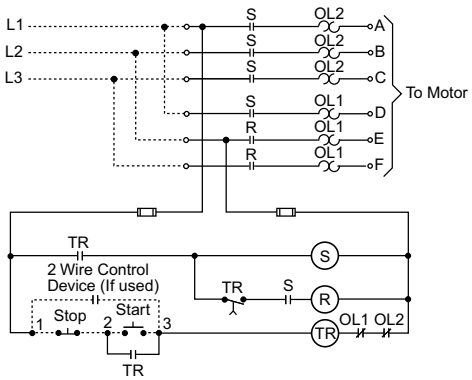

Typical Part Winding
Sizes 1–4
Common Control (Standard)

Table 16.16: How to Order

To Order Specify:	Catalog Number			
	Class	Type	Voltage Code	Form(s)
• Class Number • Type Number • Voltage Code • Form(s) *[20]*	8640	SFG1M	V06	C
	Description: 100 hp, 480 V line, 480 V common control, 60 Hz			

[16] NEMA 4 enclosures are painted sheet steel. Where required, stainless steel enclosures are available at extra cost.Specify as **Form G17**.
[17] NEMA Type 12 enclosures can be field modified for outdoor non-corrosive and non–service-entrance rated applications. See Digest Section 16 for more information.
[18] No factory modifications (Forms) are available with the OEM. kit.
[19] Both the line and control voltage must be specified to order this product. See page 16-3 for the necessary codes and instructions for ordering.
[20] Specify Forms only if any of the coils are at a different voltage than line supply (V8•). See page 16-3 for a fuller explanation of how to order; this page also provides the necessary coil voltage and Form codes as well as codes for 380 V starters and 50 Hz applications.

© 2017 Schneider Electric
All Rights Reserved

Class 8606
Autotransformer

Class 8630
Wye-Delta

Class 8640
Part Winding

Approximate Dimensions—Not for Construction

NOTE: H = Height, W = Width, D = Depth

Table 16.17: Class 8606—Autotransformer

NEMA Size	Dim.	Open		NEMA Type 1 / 12 Enclosure				NEMA Type 4 Enclosure			
				Non-Combo or Combo, with Circuit Breaker		Combo, with Disconnect Switch		Non-Combo or Combo, with Circuit Breaker		Combo, with Disconnect Switch	
		in.	mm	in.	mm	in.	mm	in.	mm	in.	mm
2	H	43	1092	52	1320	52	1320	52	1320	52	1320
	W	22	559	25	635	25	635	25	635	25	635
	D	8	203	10	254	10	254	10	254	10	254
3 or 4	H	63	1600	70 *[21]*	1778	70 *[21]*	1778	75 *[21]*	1778	75 *[21]*	1778
	W	28	711	32	813	32	813	32	813	32	813
	D	9	229	16	406	16	406	16	406	16	406
5	H	63	1600	70 *[21]*	1778	90 *[21]*	2286	75 *[21]*	1778	95 *[21]*	2413
	W	28	711	32	813	36	914	32	813	36	914
	D	9	229	16	406	16	406	16	406	16	406
6	H	56	1422	90 *[21]*	2286	90 *[21]*	2286	98 *[21]*	2489	98 *[21]*	2489
	W	30	762	34	864	64	1626	34	864	64	1626
	D	14	354	20	508	24	610	20	508	24	610

Table 16.18: Class 8630—Wye-Delta, Open Transition

NEMA Size	Dim.	Open		NEMA Type 1 / 12 Enclosure				NEMA Type 4 Enclosure			
				Non-Combo		Combo		Non-Combo		Combo	
		in.	mm	in.	mm	in.	mm	in.	mm	in.	mm
1YD or 2YD	H	21	553	25	635	25	635	25	635	—	—
	W	21	553	23	584	23	584	23	584	—	—
	D	7	178	8	203	8	203	8	203	—	—
3YD or 4YD	H	42	1067	48	1219	49	1245	48	1219	49	1245
	W	25	635	28	712	30	762	28	712	30	762
	D	7	178	8	203	11	279	8	203	11	279
5YD or 6YD	H	62	1576	90 *[21]*	2286	90 *[21]*	2286	98 *[21]*	2489	98 *[21]*	2489
	W	29	737	36	914	36	914	36	914	36	914
	D	10	254	16	406	16	406	16	406	16	406

Table 16.19: Class 8630—Wye-Delta, Closed Transition

NEMA Size	Dim.	Open		NEMA Type 1 / 12 Enclosure				NEMA Type 4 Enclosure			
				Non-Combo		Combo		Non-Combo		Combo	
		in.	mm	in.	mm	in.	mm	in.	mm	in.	mm
1YD or 2YD	H	21	553	25	635	25	635	25	635	—	—
	W	21	553	23	584	23	584	23	584	—	—
	D	14	354	16	406	16	406	16	406	—	—
3YD or 4YD	H	42	1067	48	1219	49	1245	48	1219	49	1245
	W	25	635	28	712	30	762	28	712	30	762
	D	14	354	16	406	18	457	16	406	18	457
5YD or 6YD	H	80	2032	90 *[21]*	2286	90 *[21]*	2286	98 *[21]*	2489	98 *[21]*	2489
	W	30	762	36	914	36	914	36	914	36	914
	D	12	305	16	406	16	406	16	406	16	406

Table 16.20: Class 8640—Part Winding

NEMA Size	Dim.	Open		Enclosed—NEMA Type 1 / 4 / 12					
				Non-Combo		Combo, with Circuit Breaker		Combo, with Disconnect Switch	
		in.	mm	in.	mm	in.	mm	in.	mm
1PW or 2PW	H	21	553	25	635	34	853	25	635
	W	21	553	23	584	19	483	23	584
	D	6	152	8	203	11	279	8	203
3PW	H	42	1067	48	1219	44	1118	52	1321
	W	26	660	28	712	30	762	25	635
	D	7	178	8	203	12	305	11	279
4PW	H	42	1067	48	1219	44	1118	78 *[21]*	1981
	W	26	660	28	712	30	762	32	813
	D	7	178	8	203	12	305	16	406
5PW	H	35	889	44	1118	78 *[21] [22]*	1981	78 *[21] [22]*	1981
	W	22	559	24	610	36	914	36	914
	D	10	254	12	305	16	406	16	406
6PW	H	49	1245	64	1626	—	—	90 *[21]*	2286
	W	24	610	28	712	—	—	64	1626
	D	11	279	16	406	—	—	24	406

Combination Starter Form Reference

Circuit Breaker: Y791, Y7911
Nonfusible Disconnect Switch: Y792, Y7910
Fusible Disconnect Switch: Y793-Y799

Refer to page 16-18 for a complete listing of Forms for combination devices.

[21] Free-standing enclosure.
[22] Subtract 8 in. from the height for a Type 1 or 12 enclosure.

© 2017 Schneider Electric
All Rights Reserved
2/15/2017

Table 16.21: Typical Applications

Constant Hp	Constant Torque	Variable Torque
A. Spindles B. Cutting Tools 1. Lathes 2. Saws	A. Conveyors B. Mills C. Dough Mixers D. Reciprocating Pumps	A. Fans B. Centrifugal Pumps

Multispeed Magnetic Starters Application Data

Multispeed motors are available in two basic versions:
1) separate winding, and 2) consequent pole. A separate winding motor has a winding for each speed while a consequent pole motor has a winding for every two speeds (three-speed motors have two windings). The motor connections (and thus the types of controllers) for two speed starters are exemplified by the schematic diagrams shown in Table 16.22. Note that consequent pole two-speed controllers involve a 5-pole and a 3-pole starter, while separate winding controllers have two 3-pole starters.

Verify the type of motor before ordering. Field modification of starters to match the motor **may not be possible.**

Separate winding motors are usually chosen when flexibility is important, since the speeds of a consequent pole motor are usually limited to a 2/1 ratio; a broad range of speeds can be obtained on a separate winding motor.

Both separate winding and consequent pole motors are available in three types:
1) constant horsepower, 2) constant torque, and 3) variable torque. Table 16.21 shows typical applications for these different types of motors.

NOTE: For detailed information involving the technical aspects of flexibility of the starters used in the multispeed controllers, see Classes 8702, 8736, and 8810 application data.

Table 16.22: Typical Schematic Diagrams

2-Speed
Consequent Pole
Constant Horsepower
NEMA Size 0–4Sizes 5, 6, & 7
Use Special Circuitry

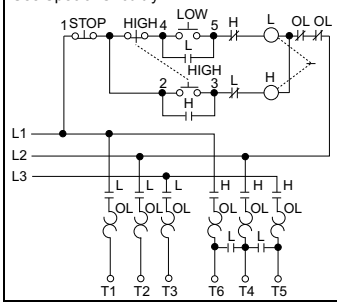

2-Speed
Consequent Pole
Constant or Variable Torque
NEMA Size 0–4Sizes 5, 6, & 7
Use Special Circuitry

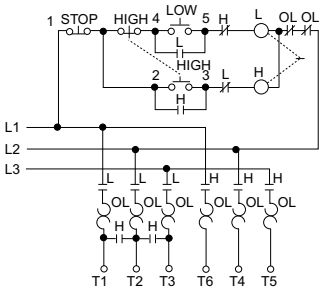

2-Speed
Separate Winding
Constant Hp, Constant Torqueand Variable Torque
NEMA Size 0–4Sizes 5, 6, & 7
Use Special Circuitry

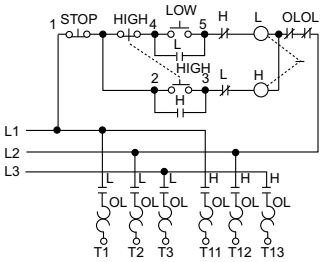

Additional Features—Special Relays for Non-Reversing and Reversing Multispeed Starters

General. Some applications require special relays to control the speed change and/or starting of the motor.
The descriptions that follow cover the four common relay schemes for these applications.
Form R1 Compelling Relay. This relay requires the motor to be started at low speed before any higher speed can be selected. This arrangement ensures that the motor will always start the load at low speed. The stop button must be pressed before it is possible to change from a higher to a lower speed. (Not available with **Form R2**.)
Form R2 Accelerating Relay/Timer. With **Form R2** accelerating relays, the ultimate speed is determined by the button which is pressed, but the starter will start the motor at low speed and automatically accelerate it through successive steps until the selected speed is reached. Definite time intervals must elapse between each speed change. Individual adjustable timing relays are provided for each interval.
The stop button must be pressed before it is possible to change from a higher to a lower speed.
(Not available with **Form R1**.)

Form R3 Decelerating Relay/Timer. This is similar in action to **Form R2** accelerating relays, except that they function to prevent immediate transfer from a higher to a lower speed. A definite time interval, preset on the timer, must elapse between each speed change.
Form R10 Antiplugging Relays/Timers. This Form imposes a time delay when transferring from the forward to the reverse direction or reverse to forward, for **reversing** multispeed starters. This provides up to a 60 second delay in the transfer of the direction of the motor, and can help prevent damage which could result from plugging.
Form Y81 (Low Speed) Overload Relay Modification.
For NEMA size 3 and 4, when the low speed full load current does not appear on the appropriate thermal unit selection tables, include **Form Y81** (low speed) (no charge for this Form). This Form modifies the overload relay block to accept Type B thermal units. For assistance on thermal unit selection, contact the Customer Care Center (CCC) at 1-888-778-2733.

Table 16.23: Special Pilot Lighting

One pilot light **On**

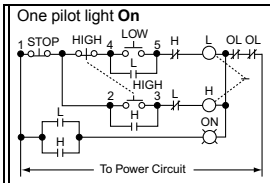

One pilot light **Off**

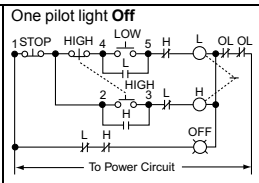

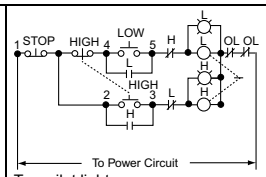

Two pilot lights
L and **H**

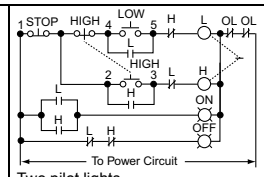

Two pilot lights
On and **Off**

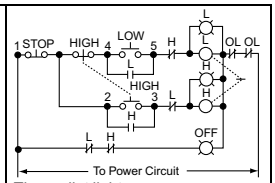

Three pilot lights
L,**H**, and **Off**
L, **H** and **Off**

© 2017 Schneider Electric
All Rights Reserved

3-Pole Polyphase, 600 Vac Maximum, 50–60 Hz

Multispeed motors are available in two basic versions: 1) consequent pole, and 2) separate winding. A separate winding motor has a winding for each speed while a consequent pole motor has a winding for every two speeds (three-speed motors have two windings).

Devices require 6 thermal units (Sizes 0–6). See Digest Section 16 for selection information.

Table 16.24: Class 8810—Non-Combination Type

Type of Motor	NEMA Size	Maximum Polyphase Horsepower Ratings: Constant Horsepower Motors 200 V	230 V	460–575 V	Constant Torque or Variable Torque Motors 200 V	230 V	460–575 V	NEMA 1 General Purpose Enclosure Type [3]	NEMA 4 & 4X Watertight and Dusttight Enclosure (Stainless Steel) (304) (Sizes 0—5) Sheet Steel (Size 6) Type [3]	NEMA 4X [1] Watertight, Dusttight and Corrosion Resistant Enclosure Type [3]	NEMA 12 /3R [2] Dusttight and Driptight Industrial Use Enclosure Type [3]	Open Type Type [3]
Single Winding (Consequent Pole) 5-Pole–3-Pole												
Constant Hp	0	2	2	3	—	—	—	SBG1●●●	SBW1●●●	SBW51●●●	SBA1●●●	SBO1●●●
	1	5	5	7-1/2	—	—	—	SCG1●●●	SCW1●●●	SCW51●●●	SCA1●●●	SCO1●●●
	2	7-1/2	10	20	—	—	—	SDG1●●●	SDW1●●●	SDW51●●●	SDA1●●●	SDO1●●●
	3	20	25	40	—	—	—	SEG1●●●	SEW1●●●	—	SEA1●●●	SEO1●●●
	4	30	40	75	—	—	—	SFG1●●●	SFW1●●●	—	SFA1●●●	SFO1●●●
	5	60	75	150	—	—	—	SGG1●●●	SGW1●●●	—	SGA1●●●	SGO1●●●
	6	100	150	300	—	—	—	SHG1●●●	SHW1●●●	—	SHA1●●●	SHO1●●●
Constant Torque or Variable Torque	0	—	—	—	3	3	5	SBG2●●●	SBW2●●●	SBW52●●●	SBA2●●●	SBO2●●●
	1	—	—	—	7-1/2	7-1/2	10	SCG2●●●	SCW2●●●	SCW52●●●	SCA2●●●	SCO2●●●
	2	—	—	—	10	15	25	SDG2●●●	SDW2●●●	SDW52●●●	SDA2●●●	SDO2●●●
	3	—	—	—	25	30	50	SEG2●●●	SEW2●●●	—	SEA2●●●	SEO2●●●
	4	—	—	—	40	50	100	SFG2●●●	SFW2●●●	—	SFA2●●●	SFO2●●●
	5	—	—	—	75	100	200	SGG2●●●	SGW2●●●	—	SGA2●●●	SGO2●●●
	6	—	—	—	150	200	400	SHG2●●●	SHW2●●●	—	SHA2●●●	SHO2●●●
Two Winding (Separate Winding) 3-Pole–3-Pole [4]												
Constant Hp [4]	0	2	2	3	—	—	—	SBG3●●●	SBW3●●●	SBW53●●●	SBA3●●●	SBO3●●●
	1	5	5	7-1/2	—	—	—	SCG3●●●	SCW3●●●	SCW53●●●	SCA3●●●	SCO3●●●
	2	7-1/2	10	20	—	—	—	SDG3●●●	SDW3●●●	SDW53●●●	SDA3●●●	SDO3●●●
	3	20	25	40	—	—	—	SEG3●●●	SEW3●●●	—	SEA3●●●	SEO3●●●
	4	30	40	75	—	—	—	SFG3●●●	SFW3●●●	—	SFA3●●●	SFO3●●●
	5	60	75	150	—	—	—	SGG3●●●	SGW3●●●	—	SGA3●●●	SGO3●●●
	6	100	150	300	—	—	—	SHG3●●●	SHW3●●●	—	SHA3●●●	SHO3●●●
	7	—	225	450	—	—	—	SJG3●●●	—	—	SJA3●●●	SJO3●●●
Constant Torque or Variable Torque [4]	0	—	—	—	3	3	5	SBG4●●●	SBW4●●●	SBW54●●●	SBA4●●●	SBO4●●●
	1	—	—	—	7-1/2	7-1/2	10	SCG4●●●	SCW4●●●	SCW54●●●	SCA4●●●	SCO4●●●
	2	—	—	—	10	15	25	SDG4●●●	SDW4●●●	SDW54●●●	SDA4●●●	SDO4●●●
	3	—	—	—	25	30	50	SEG4●●●	SEW4●●●	—	SEA4●●●	SEO4●●●
	4	—	—	—	40	50	100	SFG4●●●	SFW4●●●	—	SFA4●●●	SFO4●●●
	5	—	—	—	75	100	200	SGG4●●●	SGW4●●●	—	SGA4●●●	SGO4●●●
	6	—	—	—	150	200	400	SHG4●●●	SHW4●●●	—	SHA4●●●	SHO4●●●
	7	—	—	—	—	300	600	SJG4●●●	—	—	SJA4●●●	SJO4●●●

Table 16.25: Class 8810—Combination Circuit Breaker Type (Thermal Magnetic Circuit Breakers) [5][6]

Single Winding (Consequent Pole) 5-Pole–3-Pole												
Constant Hp	0	2	2	3	—	—	—	CBG1●●●	CBW1●●●	CBW51●●●	CBA1●●●	—
	1	5	5	7-1/2	—	—	—	CCG1●●●	CCW1●●●	CCW51●●●	CCA1●●●	—
	2	7-1/2	10	20	—	—	—	CDG1●●●	CDW1●●●	CDW51●●●	CDA1●●●	—
	3	20	25	40	—	—	—	CEG1●●●	CEW1●●●	—	CEA1●●●	—
	4	30	40	75	—	—	—	CFG1●●●	CFW1●●●	—	CFA1●●●	—
	5	60	75	150	—	—	—	CGG1●●●	CGW1●●●	—	CGA1●●●	—
	6	100	150	300	—	—	—	CHG1●●●	CHW1●●●	—	CHA1●●●	—
Constant Torque or Variable Torque	0	—	—	—	3	3	5	CBG2●●●	CBW2●●●	CBW52●●●	CBA2●●●	—
	1	—	—	—	7-1/2	7-1/2	10	CCG2●●●	CCW2●●●	CCW52●●●	CCA2●●●	—
	2	—	—	—	10	15	25	CDG2●●●	CDW2●●●	CDW52●●●	CDA2●●●	—
	3	—	—	—	25	30	50	CEG2●●●	CEW2●●●	—	CEA2●●●	—
	4	—	—	—	40	50	100	CFG2●●●	CFW2●●●	—	CFA2●●●	—
	5	—	—	—	75	100	200	CGG2●●●	CGW2●●●	—	CGA2●●●	—
	6	—	—	—	150	200	400	CHG2●●●	CHW2●●●	—	CHA2●●●	—
Two Winding (Separate Winding) 3-Pole–3-Pole [4]												
Constant Hp [4]	0	2	2	3	—	—	—	CBG3●●●	CBW3●●●	CBW53●●●	CBA3●●●	—
	1	5	5	7-1/2	—	—	—	CCG3●●●	CCW3●●●	CCW53●●●	CCA3●●●	—
	2	7-1/2	10	20	—	—	—	CDG3●●●	CDW3●●●	CDW53●●●	CDA3●●●	—
	3	20	25	40	—	—	—	CEG3●●●	CEW3●●●	—	CEA3●●●	—
	4	30	40	75	—	—	—	CFG3●●●	CFW3●●●	—	CFA3●●●	—
	5	60	75	150	—	—	—	CGG3●●●	CGW3●●●	—	CGA3●●●	—
	6	100	150	300	—	—	—	CHG3●●●	CHW3●●●	—	CHA3●●●	—
	7	—	225	450	—	—	—	CJG3●●●	—	—	CJA3●●●	—
Constant Torque or Variable Torque [4]	0	—	—	—	3	3	5	CBG4●●●	CBW4●●●	CBW54●●●	CBA4●●●	—
	1	—	—	—	7-1/2	7-1/2	10	CCG4●●●	CCW4●●●	CCW54●●●	CCA4●●●	—
	2	—	—	—	10	15	25	CDG4●●●	CDW4●●●	CDW54●●●	CDA4●●●	—
	3	—	—	—	25	30	50	CEG4●●●	CEW4●●●	—	CEA4●●●	—
	4	—	—	—	40	50	100	CFG4●●●	CFW4●●●	—	CFA4●●●	—
	5	—	—	—	75	100	200	CGG4●●●	CGW4●●●	—	CGA4●●●	—
	6	—	—	—	150	200	400	CHG4●●●	CHW4●●●	—	CHA4●●●	—
	7	—	—	—	—	300	600	CJG4●●●	—	—	CJA4●●●	—

[1] NEMA 4X hubs are included with each starter at no additional cost.
[2] NEMA Type 12 enclosures can be field modified for outdoor non-corrosive and non–service-entrance rated applications. See Digest Section 16 for more information.
[3] Replace the bullets (●●●) with the voltage code when ordering this product. Refer to the standard voltage codes shown on page 16-3.
[4] Type numbers shown for three-phase, separate-winding motor starters apply only when motor windings are wye connected. When motor windings are connected open delta, prices for three-phase, consequent pole motor starters apply.
[5] The NEC 1300% maximum setting for instantaneous trip circuit breakers may be inadequate for multispeed motors.
[6] Not available in Mag-Gard versions.

© 2017 Schneider Electric
All Rights Reserved
2/15/2017

3-Pole Polyphase, 600 Vac Max., 50–60 Hz

Devices require 6 thermal units (Sizes 0–6). See Digest Section 16 for selection information.

Table 16.26: Class 8810—Combination Disconnect Switch Type (Class H Fuse Clips)

Type of Motor	NEMA Size	Maximum Polyphase Horsepower Ratings						Fuse Clip Size A	NEMA 1 General Purpose Enclosure	NEMA 4 & 4X Watertight and Dusttight Enclosure Stainless Steel (304) (Sizes 0–5) Sheet Steel (Size 6 not 4X)	NEMA 12/3R [7] Dusttight and Driptight Industrial Use Enclosure
		Constant Horsepower Motors			Constant Torque or Variable Torque Motors						
		200 V	230 V	460–575 V	200 V	230 V	460–575 V		Type [8]	Type [8]	Type [8]
Single Winding (Consequent Pole) 5-Pole–3-Pole											
Constant Hp	0	2	2	3	—	—	—	None 30 [9]	UBG1●●● DBG1●●●	UBW1●●● DBW1●●●	UBA1●●● DBA1●●●
	1	5	5	7-1/2	—	—	—	None 30 [9]	UCG1●●● DCG1●●●	UCW1●●● DCW1●●●	UCA1●●● DCA1●●●
	2	7-1/2	10	20	—	—	—	None 60	UDG1●●● DDG1●●●	UDW1●●● DDW1●●●	UDA1●●● DDA1●●●
	3	20	25	40	—	—	—	None 100	UEG1●●● DEG1●●●	UEW1●●● DEW1●●●	UEA1●●● DEA1●●●
	4	30	40	75	—	—	—	None 200	UFG1●●● DFG1●●●	UFW1●●● DFW1●●●	UFA1●●● DFA1●●●
	5	60	75	150	—	—	—	None 400	UGG1●●● DGG1●●●	UGW1●●● DGW1●●●	UGA1●●● DGA1●●●
	6	100	150	300	—	—	—	None 600	UHG1●●● DHG1●●●	UHW1●●● DHW1●●●	UHA1●●● DHA1●●●
Constant Torque or Variable Torque	0	—	—	—	3	3	5	None 30 [9]	UBG2●●● DBG2●●●	UBW2●●● DBW2●●●	UBA2●●● DBA2●●●
	1	—	—	—	7-1/2	7-1/2	10	None 30 [9]	UCG2●●● DCG2●●●	UCW2●●● DCW2●●●	UCA2●●● DCA2●●●
	2	—	—	—	10	15	25	None 60	UDG2●●● DDG2●●●	UDW2●●● DDW2●●●	UDA2●●● DDA2●●●
	3	—	—	—	25	30	50	None 100	UEG2●●● DEG2●●●	UEW2●●● DEW2●●●	UEA2●●● DEA2●●●
	4	—	—	—	40	50	100	None 200	UFG2●●● DFG2●●●	UFW2●●● DFW2●●●	UFA2●●● DFA2●●●
	5	—	—	—	75	100	200	None 400	UGG2●●● DGG2●●●	UGW2●●● DGW2●●●	UGA2●●● DGA2●●●
	6	—	—	—	150	200	400	None 600	UHG2●●● DHG2●●●	UHW2●●● DHW2●●●	UHA2●●● DHA2●●●
Two Winding (Separate Winding) 3-Pole–3-Pole											
Constant Hp [10]	0	2	2	3	—	—	—	None 30 [9]	UBG3●●● DBG3●●●	UBW3●●● DBW3●●●	UBA3●●● DBA3●●●
	1	5	5	7-1/2	—	—	—	None 30 [9]	UCG3●●● DCG3●●●	UCW3●●● DCW3●●●	UCA3●●● DCA3●●●
	2	7-1/2	10	20	—	—	—	None 60	UDG3●●● DDG3●●●	UDW3●●● DDW3●●●	UDA3●●● DDA3●●●
	3	20	25	40	—	—	—	None 100	UEG3●●● DEG3●●●	UEW3●●● DEW3●●●	UEA3●●● DEA3●●●
	4	30	40	75	—	—	—	None 200	UFG3●●● DFG3●●●	UFW3●●● DFW3●●●	UFA3●●● DFA3●●●
	5	60	75	150	—	—	—	None 400	UGG3●●● DGG3●●●	UGW3●●● DGW3●●●	UGA3●●● DGA3●●●
	6	100	150	300	—	—	—	None 600	UHG3●●● DHG3●●●	UHW3●●● DHW3●●●	UHA3●●● DHA3●●●
Constant Torque or Variable Torque [10]	0	—	—	—	3	3	5	None 30 [9]	UBG4●●● DBG4●●●	UBW4●●● DBW4●●●	UBA4●●● DBA4●●●
	1	—	—	—	7-1/2	7-1/2	10	None 30 [9]	UCG4●●● DCG4●●●	UCW4●●● DCW4●●●	UCA4●●● DCA4●●●
	2	—	—	—	10	15	25	None 60	UDG4●●● DDG4●●●	UDW4●●● DDW4●●●	UDA4●●● DDA4●●●
	3	—	—	—	25	30	50	None 100	UEG4●●● DEG4●●●	UEW4●●● DEW4●●●	UEA4●●● DEA4●●●
	4	—	—	—	40	50	100	None 200	UFG4●●● DFG4●●●	UFW4●●● DFW4●●●	UFA4●●● DFA4●●●
	5	—	—	—	75	100	200	None 400	UGG4●●● DGG4●●●	UGW4●●● DGW4●●●	UGA4●●● DGA4●●●
	6	—	—	—	150	200	400	None 600	UHG4●●● DHG4●●●	UHW4●●● DHW4●●●	UHA4●●● DHA4●●●

Table 16.27: Coil Voltage Codes

Voltage		Code
60 Hz	50 Hz	
24 [11] [12]	—	V01
120 [12]	110	V02
208	—	V08
240	220	V03
—	380	V05
480	440	V06
600	550	V07
Specify	Specify	V99

NOTE: For voltage codes used with control transformers, see page 16-18. **Form S** (separate control) is used when a separate source of power is available for the control (coil) voltage. Form S is provided at no charge.

For dimensions, see page 16-13.

Refer to Digest Section 16 factory modifications (Forms), replacement parts (Class 9998), and Type S accessories (Class 9999).

[7] NEMA Type 12 enclosures can be field modified for outdoor non-corrosive and non–service-entrance rated applications. See Digest Section 16 for more information.
[8] Replace the bullets (●●●) with the voltage code when ordering this product. Refer to the standard voltage codes shown in Table 16.27.
[9] When separate control is specified, use V8x voltage codes (see Table 16.53) to specify motor and control voltages.
[10] Type numbers shown for three-phase, separate-winding motor starters apply only when motor windings are wye connected. When motor windings are connected open delta, prices for three-phase, consequent pole motor starters apply.
[11] 24 V coils are not available on Sizes 4–7. On Sizes 00–3, 24 V coils are available using **Form S** (separate control) (for example, order as 8810UBG1V01S).
[12] These voltage codes must include **Form S** (provided at no charge) (for example, order as 8810UCG1V02S).

© 2017 Schneider Electric
All Rights Reserved

3-Pole Polyphase, 600 Vac Max., 50–60 Hz

Devices require 6 thermal units (Sizes 0–6). See Digest Section16 for selection information.

Table 16.28: Class 8810—Reversing

Type of Motor	NEMA Size	Maximum Polyphase Ratings						Reversing In One Speed Only (Specify High or Low) [13]			Reversing In Both Speeds		
		Constant Hp Motors			Constant Torque or Variable Torque Motors			NEMA 1 General Purpose Enclosure	NEMA 12 Dusttight and Driptight Industrial Use Enclosure	Open Type	NEMA 1 General Purpose Enclosure	NEMA 12/3R [14] Dusttight and Driptight Industrial Use Enclosure	Open Type
		200 V	230 V	460–575 V	200 V	230 V	460–575 V	Type [15]	Type [15]	Type [15]	Type [15]	Type [15]	Type
Single Winding, Constant Hp	0	2	2	3	—	—	—	SBG21●●●	SBA21●●●	SBO21●●●	SBG31●●●	SBA31●●●	SBO31●●●
	1	5	5	7-1/2	—	—	—	SCG21●●●	SCA21●●●	SCO21●●●	SCG31●●●	SCA31●●●	SCO31●●●
	2	7-1/2	10	20	—	—	—	SDG21●●●	SDA21●●●	SDO21●●●	SDG31●●●	SDA31●●●	SDO31●●●
	3	20	25	40	—	—	—	SEG21●●●	SEA21●●●	SEO21●●●	SEG31●●●	SEA31●●●	SEO31●●●
	4	30	40	75	—	—	—	SFG21●●●	SFA21●●●	SFO21●●●	SFG31●●●	SFA31●●●	SFO31●●●
	5	60	75	150	—	—	—	SGG21●●●	SGA21●●●	SGO21●●●	SGG31●●●	SGA31●●●	SGO31●●●
Single Winding, Constant Torque or Variable Torque	0	—	—	—	3	3	5	SBG22●●●	SBA22●●●	SBO22●●●	SBG32●●●	SBA32●●●	SBO32●●●
	1	—	—	—	7-1/2	7-1/2	10	SCG22●●●	SCA22●●●	SCO22●●●	SCG32●●●	SCA32●●●	SCO32●●●
	2	—	—	—	10	15	25	SDG22●●●	SDA22●●●	SDO22●●●	SDG32●●●	SDA32●●●	SDO32●●●
	3	—	—	—	25	30	50	SEG22●●●	SEA22●●●	SEO22●●●	SEG32●●●	SEA32●●●	SEO32●●●
	4	—	—	—	40	50	100	SFG22●●●	SFA22●●●	SFO22●●●	SFG32●●●	SFA32●●●	SFO32●●●
	5	—	—	—	75	100	200	SGG22●●●	SGA22●●●	SGO22●●●	SGG32●●●	SGA32●●●	SGO32●●●
Two Winding, Constant Hp [16]	0	2	2	3	—	—	—	SBG23●●●	SBA23●●●	SBO23●●●	SBG33●●●	SBA33●●●	SBO33●●●
	1	5	5	7-1/2	—	—	—	SCG23●●●	SCA23●●●	SCO23●●●	SCG33●●●	SCA33●●●	SCO33●●●
	2	7-1/2	10	20	—	—	—	SDG23●●●	SDA23●●●	SDO23●●●	SDG33●●●	SDA33●●●	SDO33●●●
	3	20	25	40	—	—	—	SEG23●●●	SEA23●●●	SEO23●●●	SEG33●●●	SEA33●●●	SEO33●●●
	4	30	40	75	—	—	—	SFG23●●●	SFA23●●●	SFO23●●●	SFG33●●●	SFA33●●●	SFO33●●●
	5	60	75	150	—	—	—	SGG23●●●	SGA23●●●	SGO23●●●	SGG33●●●	SGA33●●●	SGO33●●●
Two Winding, Constant Torque [16] or Variable Torque	0	—	—	—	3	3	5	SBG24●●●	SBA24●●●	SBO24●●●	SBG34●●●	SBA34●●●	SBO34●●●
	1	—	—	—	7-1/2	7-1/2	10	SCG24●●●	SCA24●●●	SCO24●●●	SCG34●●●	SCA34●●●	SCO34●●●
	2	—	—	—	10	15	25	SDG24●●●	SDA24●●●	SDO24●●●	SDG34●●●	SDA34●●●	SDO34●●●
	3	—	—	—	25	30	50	SEG24●●●	SEA24●●●	SEO24●●●	SEG34●●●	SEA34●●●	SEO34●●●
	4	—	—	—	40	50	100	SFG24●●●	SFA24●●●	SFO24●●●	SFG34●●●	SFA34●●●	SFO34●●●
	5	—	—	—	75	100	200	SGG24●●●	SGA24●●●	SGO24●●●	SGG34●●●	SGA34●●●	SGO34●●●

3-Pole Polyphase, 600 Vac Max., 50–60 Hz

Devices require 6 thermal units (Sizes 0–6). See Digest Section 16 for selection information.

Table 16.29: Class 8810—Non-Reversing, Vertically Arranged, Open Type, Two-Speed Starters

Type of Motor	NEMA Size	Maximum Hp Ratings				For Consequent Pole Motors	For Separate Winding Motors
		200 V	230 V	380 V	460-575 V	Type [17]	Type [17]
Constant Hp	0	2	2	3	3	SBO11●●●	SBO13●●●
	1	5	5	7-1/2	7-1/2	SCO11●●●	SCO13●●●
	2	7-1/2	10	20	20	SDO11●●●	SDO13●●●
	3	20	25	40	40	SEO11●●●	SEO13●●●
	4	30	40	60	75	SFO11●●●	SFO13●●●
Constant Torque or Variable Torque	0	3	3	5	5	SBO12●●●	SBO14●●●
	1	7-1/2	7-1/2	10	10	SCO12●●●	SCO14●●●
	2	10	15	25	25	SDO12●●●	SDO14●●●
	3	25	30	50	50	SEO12●●●	SEO14●●●
	4	40	50	75	100	SFO12●●●	SFO14●●●

Table 16.30: Coil Voltage Codes

Voltage		Code
60 Hz	50 Hz	
24 [18] [19]	—	V01
120 [19]	110	V02
208	—	V08
240	220	V03
—	380	V05
480	440	V06
600	550	V07
Specify	Specify	V99

NOTE: For voltage codes used with control transformers, see page 16-18.
Form S (separate control) is used when a separate source of power is available for the control (coil) voltage.
Form S is provided at no charge.
For dimensions, see page 16-13.

Refer to Digest Section 16 for factory modifications (Forms), replacement parts (Class 9998), and Type S accessories (Class 9999).

[13] Specify the speed that requires reversing by adding an L (low) or an H (high) after the type number—for example, a Class 8810 Type SBG21 with reversing in low only would be ordered as a Class 8810 Type SBG21L.
[14] NEMA Type 12 enclosures can be field modified for outdoor non-corrosive and non–service-entrance rated applications. See Digest Section 16 for more information.
[15] Replace the bullets (●●●) with the voltage code when ordering this product. Refer to the standard voltage codes shown in Table 16.30.
[16] Type numbers shown for three-phase, separate-winding motor starters apply only when motor windings are wye connected.
When motor windings are connected open delta, prices for three-phase, consequent pole motor starters apply.
[17] Replace the bullets (●●●) with the voltage code when ordering this product. Refer to the standard voltage codes shown in Table 16.30.
[18] 24 V coils are not available on Sizes 4–7. On Sizes 00–3, 24 V coils are available using **Form S** (separate control) (for example, order as 8810SCG21V01S).
[19] These voltage codes must include **Form S** (provided at no charge) (for example, order as 8810SDG21V02S).

© 2017 Schneider Electric
All Rights Reserved

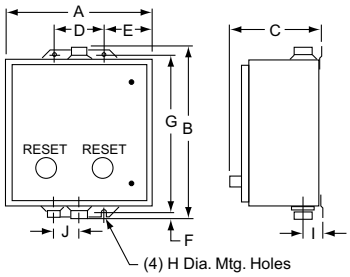

Figure 1:
NEMA Type 1, 4, and 12 Enclosures

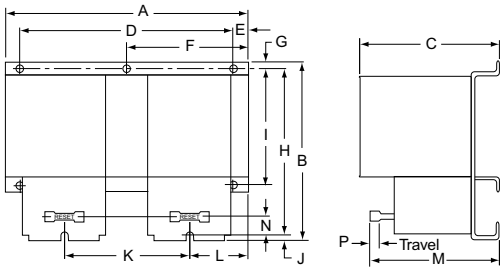

Figure 2:
Class 8810 NEMA Sizes 0, 1, and 2

Dimensions

Table 16.31: NEMA Type 1 Enclosure (see Figure 1)

Type	A	B	C	D	E	F	G	H
SBG and SCG	11-7/8	11-7/8	7-17/32	9-3/4	1-1/16	1-1/16	9-3/4	5/16
SDG	14-7/8	14-1/8	7-21/32	12-3/4	1-1/16	1-1/16	12	5/16
SEG3 & 4 and SFG3 & 4	18-5/32	29-5/32	9-15/64	15-1/2	1-11/32	1-11/32	26-1/2	7/16
SEG1 & 2 and SFG1 & 2	22-5/32	39-5/32	10-15/64	19-1/2	1-11/32	1-11/32	36-1/2	7/16
SGG1, 2, 3, 4	20-7/32	65-3/4	16-29/64	31	2-1/8	2-1/8	42	9/16
SHG1, 2, 3, 4	36-7/32	62-7/32	19-15/32	Floor Mount				
SJG3 & 4	Consult Square D							

Table 16.32: NEMA Type 4 Enclosure (see Figure 1)

Type	A	B	C	D	E	F	G	H	I	J
SBW and SCW	12-5/8	14-11/16	7-13/16	4-1/4	4-3/16	19/32	13-1/2	5/16	1-21/32	2-5/16
SDW	14-7/8	15-3/4	8-1/4	4-1/4	5-5/16	3/8	15	5/16	2-1/32	2-5/8
SEW3 & 4 and SFW3 & 4	18-5/32	32-7/32	8-19/64	12	3-5/64	55/64	30-1/2	7/16	2-37/64	3-3/16
SEW1 & 2 and SFW1 & 2	22-5/32	42-7/32	9-49/64	16	3-5/64	55/64	40-1/2	7/16	2-21/64	2-57/64
SGW1, 2, 3, 4	35-7/32	49-7/32	12-1/8	27	4-3/32	39/64	48	9/16	2-63/64	3-1/2

Table 16.33: NEMA Type 12/3R Enclosure (see Figure 1)

Type	A	B	C	D	E	F	G	H
SBA and SCA	11-7/8	13-1/2	7-3/4	4-1/4	3-13/16	3/8	12-3/4	5/16
SDA	14-7/8	15-3/4	7-7/8	4-1/4	5-5/16	3/8	15	5/16
SEA3 & 4 and SFA3 & 4	18-5/32	31-1/2	9-19/32	16	3-3/32	1/2	30-1/2	7/16
SEA1 & 2 and SFA1 & 2	22-5/3	41-1/2	10-19/32	16	3-3/32	1/2	40-1/2	7/16
SGA1, 2, 3, 4	35-7/32	49	13-7/64	27	4-7/64	1/2	48	9/16
SHA1, 2, 3, 4	36-7/32	62-7/32	19-15/32	Floor Mount				
SJA3 & 4	Consult Square D							

Table 16.34: Non-Reversing, Open Type

Fig. No.	NEMA Size	Type	Mtg. Holes	A	B	C	D	E	F	G	H	I	J	K	L	M	N
2	0 and 1	SBO1, 2 SCO1, 2	4	9-5/8	7-11/32	5-5/16	8	5/8	—	7/32	6-29/32	—	7/32	4-3/4	2-1/4	5-1/16	19/32
		SBO3, 4 SCO3, 4	3	7-1/8	6-29/32	5-5/16	—	—	3-13/32	15/32	6-7/32	—	7/32	3-9/16	1-5/8	5-1/16	19/32
	2	SDO1, 2	6	12-1/32	8-17/32	6-1/32	10-3/8	1/2	—	1/4	8-1/8	6-1/4	5/32	5-3/4	2-13/16	5-5/32	25/32
		SDO3, 4	3	9	8-1/16	6-1/32	—	—	4-1/2	3/8	7-1/2	—	3/16	4-11/32	2-5/32	5-5/32	25/32
3	3	SEO1, 2	4	18	14-7/16	17	12-1/4	1-1/2	11/16	1/2	6-7/16	7-3/8	1-21/32	2-5/32	—	—	—
		SEO3, 4	4	12-3/4	12-9/32	11-3/4	10-3/4	1-1/32	1/2	1/2	2-1/2	6-3/4	1-5/32	1-5/32	—	—	—
	4	SFO1, 2	4	18-5/8	15-19/32	17	12-1/4	1-27/32	1-1/2	1-1/8	6-7/16	7-21/32	1-21/32	1-21/32	—	—	—
		SFO3, 4	4	14-1/4	14-19/32	13-1/4	12-1/4	1-27/32	1/2	1/2	2-15/16	7-3/8	1-21/32	1-21/32	—	—	—
4	5	SGO1, 2 *[20]*	4	29-9/32	20-9/32	9-3/8	5-13/32	1-9/32	28	5/8	12-9/16	19	5/8	22-17/32	1/2	2-13/32	6-5/8
		SGO3, 4	4	19-9/32	20-9/32	9-3/8	5-13/32	1-9/32	18	5/8	2-5/8	19	5/8	12-17/32	1/2	2-13/32	6-5/8
4	6 *[21]*	SHO1, 2 *[20]*	4	29-17/32	22-7/16	9-17/32	6-31/32	3-13/16	28	3/4	11-5/8	21-3/16	5/8	9-7/8	9/16	3-1/32	9-5/16
		SHO3, 4	4	19-17/32	22-7/16	9-17/32	6-31/32	3-13/16	18	3/4	21-3/16	1-11/16	5/8	9-7/8	9/16	3-1/32	9-5/16
—	7 *[22]*	SJO3, 4	Consult the Customer Care Center (CCC) at 1-888-778-2733.														

NOTE: Illustrations are for dimensional information only and may not represent the actual enclosure. Dimension units are in. or in. (mm).

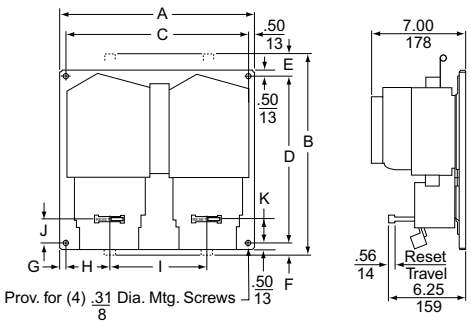

Figure 3: Class 8810 NEMA Sizes 3 and 4

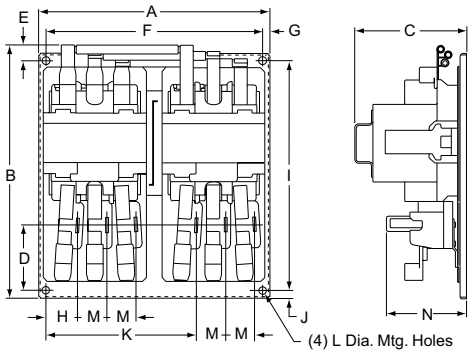

Figure 4: Class 8810 NEMA Size 5 and 6

[20] Consequent pole style starters consist of two 3-pole starters as pictured in Figure 4 and an additional 2-pole shorting contactor (not shown), all on a common baseplate, horizontally mounted.
[21] Current transformers used with Size 1 overload relay blocks.
[22] Solid-state overload relays and special current transformers.

© 2017 Schneider Electric
All Rights Reserved

Disconnect Switch or Circuit Breaker Type

Dimensions are for reference only. For precise measurements, contact the Customer Care Center (CCC) at 1-888-778-2733.

Table 16.35: Class 8810, NEMA 1 Enclosure, Figure 1

NEMA Size	Type	Dimensions (in.)—see Figure 1															Hubs		
																	Top & Bottom		Sides
		A	B	C	D	E	F	G	H	I	J	K	L	M	N	O	W	X	Y
0–1	CBG UBG DBG CCG UCG DCG	13.88	23.13	8.25	10.63	21	19.28	1.88	1.88	3.75	2.31	1.06	3.3	2.19	1.25	0.88	0.5–0.75–1	0.5–0.75–1	0.5
2	CDG UDG DDG	15.16	28.91	9.56	11.63	26.25	21.81	2.19	2	4	2.63	1.33	3.3	2.22	1.27	0.91	1–1.25	0.5–0.75	0.5
3 *[23]*	CEG UEG DEG	22.13	42.63	10.13	18.63	40	29.13	2.34	2.13	4.25	2.63	1.25	3.3	2.25	0.88	0.75	1–1.25–1.5	0.5–0.75	0.5
4 *[23]*	CFG UFG DFG	22.13	50.13	10.19	18.63	47.5	29.19	2.91	2.69	5.38	2.63	1.31	3.3	2.25	0.88	0.75	2.5	0.5–0.75	0.5

Table 16.36: Class 8810, NEMA 4 Enclosure, Figure 2

NEMA Size	Type	Dimensions (in.)—see Figure 2												Hubs	
														Bottom	Top & Bottom
		A	B	C	D	E	F	G	H	I	J	K	L	W	X
0–1	CBW UBW DBW CCW UCW DCW	13.88	8.33	25.19	3.3	2.56	8.75	24	0.59	3.95	1.63	2.31	18.53	0.75	1
2	CDW UDW DDW	15.13	9.58	30.94	3.3	2.56	10	29.75	0.59	3.95	2	2.63	21.34	0.75	1.5
3 *[23]*	CEW UEW DEW	22.13	10.13	46.25	3.3	3	16	44	0.63	3.94	1.75	2.63	29.13	0.75	2
4 *[23]*	CFW UFW DFW	22.13	10.19	53.75	3.3	3	16	51.5	0.63	3.94	2.28	3.19	29.19	0.75	2.5

Table 16.37: Class 8810, NEMA 12 Enclosure, Figure 3

NEMA Size	Type	Dimensions (in.)—see Figure 3									
		A	B	C	D	E	F	G	H	I	J
0–1	CBA UBA DBA CCA UCA DCA	13.88	10.09	24.75	3.3	2.56	8.75	24	0.38	3.95	20.28
2	CDA UDA DDA	15.16	10.97	31.25	3.3	3.08	9	30.25	0.5	4.83	23.44
3 *[23]*	CEA UEA DEA	22.13	10.13	45	3.3	3	16	44	0.63	3.94	29.13
4 *[23]*	CFA UFA DFA	22.13	10.19	52.5	3.3	3	16	51.5	0.63	3.94	29.19

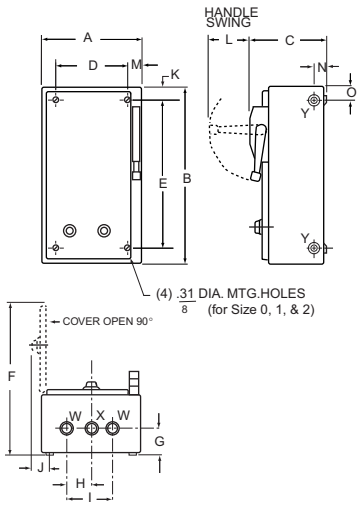

Figure 1:
NEMA Type 1 Enclosure

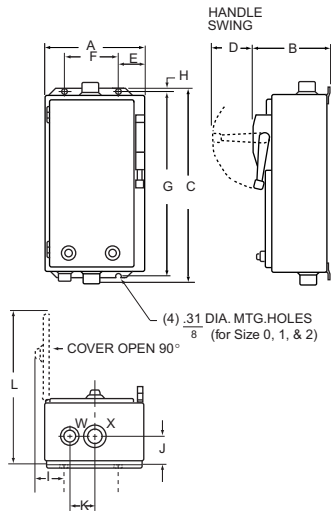

Figure 2:
NEMA Type 4 Enclosure

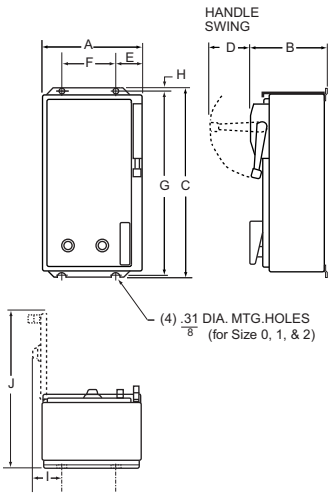

Figure 3:
NEMA Type 12 Enclosure

NOTE: Illustrations are intended for dimensional information only and may not represent the actual enclosure. Dimensions are shown in inches.

[23] **Size 3** (5-Pole–3-Pole) with FA, KA circuit breaker or 100 A disconnect switch. **Size 4** (5-Pole–3-Pole) with KA circuit breaker or 200 A disconnect switch. **Size 3 & 4** (3-Pole–3-Pole) enclosures may be smaller. Consult the Customer Care Center (CCC) at 1-888-778-2733 for additional dimensional information.

© 2017 Schneider Electric
All Rights Reserved

Panel Mount

General Information

Panelboard lighting contactors, sometimes called remote control switches, are designed for use with lighting panelboards and motor control centers where either panel or bus mounting is desired. Type PB lighting contactors can be used in a retrofit or new project without increasing the panelboard depth. They can be used to directly replace many inoperative existing switches.

The features include: mechanically held; compatible with Square D panelboards; short-circuit ratings to 100 kA; compact arc suppression; bus or panel mounted; fits in standard-depth lighting panelboards; easy manual operation; standard coil clearing contacts; and operates in any position.

Table 16.38: Class 8903 Type PB Lighting Contactors

Description		Bus Mount	Panel Mount (Includes Lugs)
Size (A)	Poles	Type *[1]*	Type *[1]*
30	2 3	PBM10B••• PBM11B•••	PBM10••• PBM11•••
60	2 3	PBP10B••• PBP11B•••	PBP10••• PBP11•••
75	2 3	PBN10B••• PBN11B•••	PBN10••• PBN11•••
100	2 3	PBQ10B••• PBQ11B•••	PBQ10••• PBQ11•••
150	2 3	PBR10B••• PBR11B•••	PBR10••• PBR11•••
200	2 3	PBV10B••• PBV11B•••	PBV10••• PBV11•••
225	2 3	PBW10B••• PBW11B•••	PBW10••• PBW11•••

Table 16.39: AC Coil Voltage Codes

60 Hz	Voltage Code
120	V02
208	V08
240/277	V39
480	V28

Table 16.40: Class 8903—Auxiliary Contacts

Type	Description
PBX1	(1) Auxiliary Contact SPDT
PBX2	(2) Auxiliary Contacts SPDT

Table 16.41: Factory Modifications

Form	Description
X11	(1) Auxiliary Contact SPDT
X22	(2) Auxiliary Contacts SPDT

Table 16.42: Maximum Wire Size (AWG)

Current Range	Power Wire (Cu/Al)	Control Wire (Cu Only)
30–100 A	#1/0 Max.	#18–#10
150–225 A	350 MCM Max.	#18–#10

Table 16.43: Control Distance

Wire Gauge AWG	Maximum Distance (feet)				
	120 V	208 V	240 V	277 V	480 V
14	550	1650	2200	2925	8800
12	900	2700	3600	4700	14400
10	1425	4275	5700	7550	22800

Table 16.44: Short-Circuit Ratings

RMS Sym. Current (A)	Max. Volts	Short Circuit Protection Device Recommended
100,000	600	Class J Fuses
22,000	600	Circuit Breaker—Square D—Type LHL
65,000	240	Circuit Breaker—Square D—Type LHL

Table 16.45: Dimensions (Panel Mount)

A	Dimensions													
	H		W		D		A		B		C		E	
	in.	mm	in.	mm	in.	mm	in.	mm	in.	mm	in.	mm	in.	mm
30–100	11.75	298	7.50	191	3.88	98	2.25	57	7.38	187	2.25	57	9.25	235
150–225	14.50	368	7.50	191	3.88	98	2.88	73	8.50	216	3.00	76	10.50	267

Table 16.46: Dimensions (Bus Mount)

A	Dimensions									
	H		W		D		A		B	
	in.	mm	in.	mm	in.	mm	in.	mm	in.	mm
30–100	8.31	211	7.50	191	3.38	86	2.25	57	7.38	187
150–225	9.50	241	7.50	191	3.38	86	2.88 *[2]*	73	8.50	216

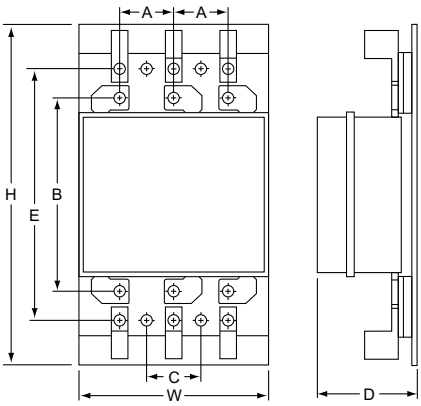

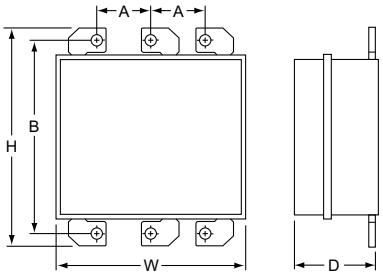

[1] Replace the bullets (•••) with the voltage code when ordering this product. Refer to the standard voltage codes shown in Table 16.39.
[2] Slotted mounting holes are suitable for 2.88–3.19 in. mounting centers.

© 2017 Schneider Electric
All Rights Reserved

Well-Guard Reduced Voltage Pump Panels

Class 8940 reduced voltage panels in NEMA 3R enclosures are specifically designed for pumping applications. Extra space is provided for field installation of auxiliary equipment.

- Type S contactors/starters provided as standard
- All devices are UL Listed, and marked "SUITABLE ONLY FOR USE AS SERVICE EQUIPMENT"
- Includes a Hand-Off-Auto selector switch and a Start push button

NOTE: Illustrations may not represent the actual enclosure; they are intended for dimensional information only.

Type VG4V06K15

Table 16.47: Coil Voltage Codes

Voltage		Code
60 Hz	50 Hz	
24 *[1]*	—	V01
120 *[2]*	110	V02
208	—	V08
240	220	V03
—	380	V05
480	440	V06
600	550	V07
Specify	Specify	V99

For How to Order Information, see Digest Section 16 for selection information.

Table 16.48: Closed Transition Autotransformer Type, 3-Pole Polyphase—480 Vac Maximum (50–60 Hz)

Motor (Starter) Volts	Max. Hp Polyphase	Coil Voltage	NEMA Size	Fusible Disconnect Style		Circuit Breaker Style	
				Fuse Clip Amperes*[3]*	Type *[4]*	Circuit Breaker	Type *[4]*
230 (240)	15	240@ 60 Hz 220@ 50 Hz	2	60	RD4DV03	FAL36080	VD1DV03
	25		3	100	RE4FV03	FAL36100	VE1FV03
	30			200	RE1GV03	KAL36100	VE2GV03
	50		4	200	RF4JV03	KAL36200	VF1JV03
	75		5	400	RG1LV03	LAL36250	VG2LV03
	100			400	RG1MV03	LAL36350	VG2MV03
460 (480)	25	480 @ 60 Hz 440 @ 50 Hz	2	60	RD2FV06	FAL36070	VD1FV06
	30		3	100	RE2GV06	FAL36080	VE1GV06
	50			100	RE2JV06	FAL36100	VE1JV06
	75		4	200	RF2LV06	KAL36125	VF1LV06
	100			200	RF2MV06	KAL36200	VF1MV06
	150		5	400	RG3PV06	LAL36250	VG4PV06
	200			400	RG3QV06	LAL36350	VG4QV06
	300		6	—	—	MAL36600	VH1SV06
	400			—	—	MAL36900	VH2TV06
	600		7	—	—	MAL361000	VJ1WV06

Table 16.49: Autotransformer—Reduced Voltage Type

Type	Figure	A		B		C		D		E		F	
		in.	mm	in.	mm	in.	mm	in.	mm	in.	mm	in.	mm
RD, VD	3	25.00	635	52.50	1334	11.13	283	19.00	483	51.50	1308	0.44	11
RE, VE, RF, VF	4	32.00	813	72.50	1842	19.25	489	29.75	756	12.50	318	0.68	17
RG	4	36.00	914	93.00	2362	19.25	489	33.75	857	12.50	318	0.69	17
VG	4	32.00	813	72.50	1842	19.25	489	29.75	756	12.50	318	0.68	17
VH	4	34.00	864	93.00	2362	23.25	591	31.75	806	16.50	419	0.69	17
VJ*[5]*	4	64.00	1626	93.00	2362	27.25	692	61.75	1568	17.25	438	0.81	21

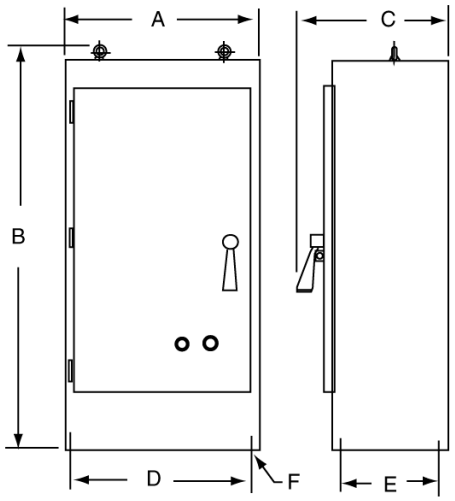

[1] 24 V coils are not available on Sizes 4–7. On Sizes 2–3, 24 V coils are available using **Form S** (separate control).
[2] This voltage code must include **Form S** (no charge).
[3] Fuse clips are sized for use with dual-element time-delay fuses.
[4] Specify the coil voltage code to order this product. Refer to the standard voltage codes shown in Table 16.47.
[5] The cabinet has double doors.

© 2017 Schneider Electric
All Rights Reserved

Table 16.50: Part Winding Type, 3-Pole Polyphase—480 Vac Maximum (50–60 Hz)—Obsolete December 31, 2015

Motor (Starter) Voltage	Max. Hp Polyphase	Coil Voltage	NEMA Size	Combination			
				Fusible Disconnect Style		Circuit Breaker Style	
				Fuse Clip (2 Sets) (A) *[6]*	Type *[7]*	Circuit Breaker (2 Breakers) Frame Size	Type *[7]*
230 (240)	25	240 @ 60 Hz 220 @ 50 Hz	2PW	60	MD4FV03	FAL36070	PD1FV03
	30		3PW	60	ME5GV03	FAL36080	PE3GV03
	50			100	ME6JV03	FAL36100	PE3JV03
	75		4PW	200	MF1LV03	KAL36150	PF3LV03
	100		5PW	200	MG3MV03	KAL36175	PG2MV03
	125			400	MG1NV03	LAL36250	PG3NV03
	150			400	MG1PV03	LAL36250	PG3PV03
460 (480)	30	480 @ 60 Hz 440 @ 50 Hz	2PW	30	MD5GV06	FAL36040	PD1GV06
	40			60	MD2HV06	FAL36050	PD1HV06
	60		3PW	60	ME7KV06	FAL36070	PE3KV06
	75			100	ME3LV06	FAL36090	PE3LV06
	100		4PW	200	MF3MV06	FAL36100	PF2MV06
	150			200	MF3PV06	KAL36125	PF3PV06
	200		5PW	200	MG4QV06	KAL36175	PG2QV06
	250			200	MG4RV06	KAL36225	PG3RV06
	350			400	MG2TV06	LAL36300	PG3TV06

Table 16.51: Part Winding, Reduced Voltage Type—Obsolete December 31, 2015

Type	Figure	A		B		C		D		E		F	
		in.	mm	in.	mm	in.	mm	in.	mm	in.	mm	in.	mm
PD	3	19.00	483	34.50	876	12.25	311	13.00	330	33.50	851	0.44	11
MD	3	23.00	584	25.50	648	10.60	269	17.00	432	24.50	622	0.44	11
PE, PF	3	30.00	762	47.00	1194	13.25	337	22.00	559	46.00	1168	0.56	14
ME	3	25.00	635	52.50	1334	12.13	308	19.00	483	51.50	1308	0.44	11
MF	4	36.00	914	93.00	2362	19.25	489	33.75	857	12.50	318	0.69	18
PG, MG	4	36.00	914	73.00	1854	19.25	489	33.75	857	12.50	318	0.69	18
PH	4	38.00	965	93.00	2362	19.25	489	35.75	908	12.50	318	0.69	18

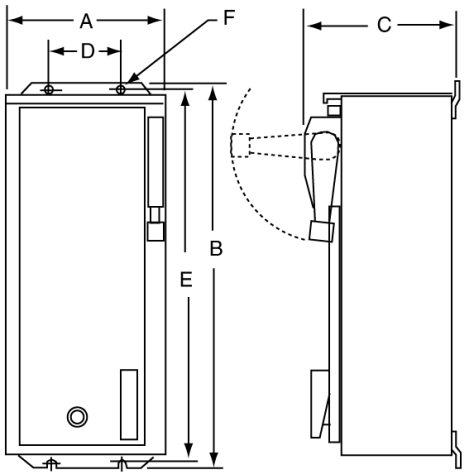

[6] Fuse clips are sized for use with dual-element time-delay fuses.
[7] Specify the coil voltage code to order this product. Refer to the standard voltage codes shown in Table 16.47.

© 2017 Schneider Electric
All Rights Reserved

Forms—Reduced Voltage Controllers Only

Table 16.52: Reduced Voltage Controllers Only—Classes 8606, 8630, 8640

Factory Modifications			Enclosure Type	Form	NEMA Size 1 1PW 1 YD	2 2 PW 2 YD	3 3 PW 3 YD	4 4 PW 4 YD	5 5 PW 5 YD	6 6 PW 6 YD	7 7 PW 7 YD
Pilot Devices in Cover and Control Circuit Reduced Voltage Controllers Only Classes 8606 8630 8640 8647 8650	**Push Buttons** *[1]*										
	Start-Stop		1, 4, 12	A	X	X	X	X	X	X	X
	Selector Switches										
	Hand-Off-Auto		1, 4, 12	C	X	X	X	X	X	X	X
	On-Off		1, 4, 12	C6	X	X	X	X	X	X	X
	Pilot Lights (specify color) *[2]*										
	One light On		1, 4, 12	P	X	X	X	X	X	X	X
	Separate Control Circuit *[3] [4]*										
	TR coil only (at control voltage)		1, 4, 12	S	N/C	N/C	N/C	N/C	N/C	N/C	N/C
	All coils (at control voltage)		1, 4, 12	Y195	N/C	N/C	N/C	N/C	N/C	N/C	N/C
	Fused Control Circuit *[3] [4] [5] [6]*										
	One fuse		1, 4, 12	F	X	X	X	X	X	N/C *[7]*	N/C *[7]*
	Two fuses		1, 4, 12	F4	X	X	X	X	X	N/C *[7]*	N/C *[7]*
	Control Circuit Transformer *[3] [4] [5]* **Standard Capacity (50 or 60 Hz)**										
	Fuses										
	Primary	Secondary									
	2—	0—	1, 4, 12	F4T	X	X	X	X	X	N/C *[7]*	N/C *[7]*
	2—	1—	1, 4, 12	FF4T	X	X	X	X	X	X	X
	2—	0—	1, 4, 12	F4T40	X	X	X	X	X	X	X
	2—	1—	1, 4, 12	FF4T40	X	X	X	X	X	X	X
	Additional capacity (50 or 60 Hz) *[8]*										
	100 VA additional capacity		1, 4, 12	T11	X	X	X	X	X	X	X
	200 VA additional capacity		1, 4, 12	T12	X	X	X	X	X	X	X
	300 VA additional capacity		1, 4, 12	T13	X	X	X	X	X	X	X
	400 VA additional capacity		1, 4, 12	T14	X	X	X	X	X	X	X
	500 VA additional capacity		1, 4, 12	T15	X	X	X	X	X	X	X
	Substitute nonstandard single primary and/or single secondary										
	Voltage rating on the control transformer *[5]*		1, 4, 12	T1*[9]*	X	X	X	X	X	—	—

Table 16.53: Selection of Control Circuit Transformers

Voltage 60 Hz (Primary–Secondary)	Code
120–12	V88
120–24	V89
208–120	V84
240–24	V82
240–120	V80
277–120	V85
480–24	V83
480–120	V81
480–240	V87
600–120	V86
Specify	V99

Selection of Control Circuit Transformers

The standard primary and secondary voltages for control circuit transformers are indicated in Table 16.53.
To order, select the desired device with the appropriate transformer Form designation. Then convert the previously selected voltage code (V••) to reflect the desired primary/secondary voltage for the transformer. The secondary voltage should equal the previously selected coil voltage of the device. (24 Vac coils for NEMA Sizes 4–7 are not available).

Example:

You have a Class 8606SDG1V02S. The designation V02S means that you need a coil voltage of 120-60/110-50 wired for separate control. You want to add **Form FF4T** with the transformer voltages at 480 V primary, 120 V secondary. The new, complete Class, Type, Voltage Code, and Form are:

Class	Type	Voltage Code	Form *[10]*
8606	SDG1	V81	FF4T

[1] All push buttons are momentary contact.
[2] For pilot light details, refer to the pilot light table in Digest Section 16.
[3] As standard, reduced voltage controllers are supplied with common control. If **Form S** or **T** is specified, only the TR coil will be at control voltage. Specify **Form Y195** or **T40** (ex. **Form F4T40**) if all coils must be at control voltage. Refer to page 16-3 for control circuit arrangements.
[4] Reduced voltage controllers include two control circuit fuses for conductors at line voltage. Additional fusing may be provideded if a fused control circuit transformer or separate control is specified.
[5] See Table 16.53.
[6] Must be used with a Form specifying separate control (Ex. **Form FS**).
[7] Size 6 and 7 controllers come with **Form F4T** as standard.
[8] Add Form letters to the standard control transformer (example: for Size 1, **Form F4T** plus 100 VA becomes **F4T11**; **Form F4T40** plus 100 VA becomes **F4T41.**).
[9] Must be used in conjunction with a variation of Form **F4T** (ex.: standard capacity transformer required, 208–24 V; order as **Form F4TT1**, 208–24 V).
[10] Always list Form numbers in alphabetical order.

© 2017 Schneider Electric
All Rights Reserved
2/15/2017

Class 8606 Reduced Voltage Starters

Table 16.54: Class 8606 Reduced Voltage Starters Only

Factory Modifications		Enclosure Type	Form	NEMA Size 1	2	3	4	5	6	7
Circuit Breaker or Disconnect Switch	Molded case thermal magnetic circuit breaker *[11]*	1	Y791	X	X	X	X	X	X	X
		4	Y791	X	X	X	X	X	X	X
		12	Y791	X	X	X	X	X	X	X
	Nonfusible disconnect switch	1	Y792	X	X	X	X	X	—	—
		4	Y792	X	X	X	X	X	—	—
		12	Y792	X	X	X	X	X	—	—
	Automatic molded case switch	1	Y7910	—	—	—	—	—	X	X
		4	Y7910	—	—	—	—	—	X	X
		12	Y7910	—	—	—	—	—	X	X
	Fusible Disconnect Switch with Fuse Clips *[12]*									
	30 A clips	1	Y793	X	X	—	—	—	—	—
		4	Y793	X	X	—	—	—	—	—
		12	Y793	X	X	—	—	—	—	—
	60 A clips	1	Y794	X	X	X	—	—	—	—
		4	Y794	X	X	X	—	—	—	—
		12	Y794	X	X	X	—	—	—	—
	100 A clips	1	Y795	—	—	X	X	—	—	—
		4	Y795	—	—	X	X	—	—	—
		12	Y795	—	—	X	X	—	—	—
	200 A clips	1	Y796	—	—	X	X	—	—	—
		4	Y796	—	—	X	X	—	—	—
		12	Y796	—	—	X	X	—	—	—
	400 A clips	1	Y797	—	—	—	—	X	X	—
		4	Y797	—	—	—	—	X	X	—
		12	Y797	—	—	—	—	X	X	—
	Automatic molded case switch with 600 A fuse clips	1	Y798	—	—	—	—	—	X	—
		4	Y798	—	—	—	—	—	X	—
		12	Y798	—	—	—	—	—	X	—
	Automatic molded case switch with fuse clips 1200 A or less	1	Y799	—	—	—	—	—	—	X
		4	Y799	—	—	—	—	—	—	X
		12	Y799	—	—	—	—	—	—	X

Table 16.55: Class 8630 Reduced Voltage Controllers Only *[13]*

Factory Modifications		Enclosure Type	Form	NEMA Size 1 YD	2 YD	3 YD	4 YD	5 YD	6 YD	7 YD
Circuit Breaker or Disconnect Switch	Molded case thermal magnetic circuit breaker *[14]*	1	Y791	X	X	X	X	X	X	X
		4	Y791	X	X	X	X	X	X	X
		12	Y791	X	X	X	X	X	X	X
	Nonfusible disconnect switch	1	Y792	X	X	X	X	—	—	—
		4	Y792	X	X	X	X	—	—	—
		12	Y792	X	X	X	X	—	—	—
	Atuomatic molded case switch	1	Y7910	—	—	—	—	X	X	X
		4	Y7910	—	—	—	—	X	X	X
		12	Y7910	—	—	—	—	X	X	X
	Fusible Disconnect Switch with Fuse Clips *[15]*									
	30 A clips	1	Y793	X	X	—	—	—	—	—
		4	Y793	X	X	—	—	—	—	—
		12	Y793	X	X	—	—	—	—	—
	60 A clips	1	Y794	X	X	—	—	—	—	—
		4	Y794	X	X	—	—	—	—	—
		12	Y794	X	X	—	—	—	—	—
	100 A clips	1	Y795	—	X	X	—	—	—	—
		4	Y795	—	X	X	—	—	—	—
		12	Y795	—	X	X	—	—	—	—
	200 A clips	1	Y796	—	—	X	X	—	—	—
		4	Y796	—	—	X	X	—	—	—
		12	Y796	—	—	X	X	—	—	—
	400 A clips	1	Y797	—	—	—	X	X	—	—
		4	Y797	—	—	—	X	X	—	—
		12	Y797	—	—	—	X	X	—	—
	Automatic molded case switch with 600 A fuse clips	1	Y798	—	—	—	—	X	X	—
		4	Y798	—	—	—	—	X	X	—
		12	Y798	—	—	—	—	X	X	—
	Automatic molded case switch with fuse clips 1200 A or less	1	Y799	—	—	—	—	—	X	X
		4	Y799	—	—	—	—	—	X	X
		12	Y799	—	—	—	—	—	X	X

[11] Mag-Gard™ circuit breakers are not supplied nor recommended.
[12] Fuses not included.
[13] Wye-Delta motor starters typically have higher current ratings per NEMA Size than full voltage motor starters. Care must be taken in selecting the appropriate short circuit protection. The table in Digest Section 7 will assist in selecting proper protection based on motor full-load current.
[14] Mag-Gard™ circuit breakers are not supplied nor recommended.
[15] Fuses not included.

© 2017 Schneider Electric
All Rights Reserved

Class 8640 Reduced Voltage Starters

NOTE: To comply with Section 430-3 of the National Electrical Code®, combination part-winding starters come as follows:

- Circuit breaker: two thermal-magnetic, adjustable-trip circuit breakers—one for each motor winding. In the smaller controllers that use the FA and KA frames, a single external operating mechanism operates the two circuit breakers simultaneously. In the larger controllers that use the KA and LA frames, each circuit breaker has its own operating mechanism.
- Nonfusible disconnect switch: a single 3-pole unfused disconnect switch of the proper rating for both windings. The user must provide proper short-circuit protection external to the starter, using only Class J fuses.
- Fusible disconnect switch: a single unfused disconnect switch with two sets of fuse clips (each set of the rating indicated) to provide short-circuit protection for each winding.

Table 16.56: Class 8640 Reduced Voltage Starters Only

Factory Modifications		Enclosure Type	Form	NEMA Size					
				1 PW	2 PW	3 PW	4 PW	5 PW	6 PW
Circuit Breaker or Disconnect Switch	Molded case thermal magnetic circuit breaker *[16]*	1	Y7911	X	X	X	X	X	—
		4	Y7911	X	X	X	X	X	—
		12	Y7911	X	X	X	X	X	—
	Fusible Disconnect Switch with Fuse Clips *[17]*								
	30 A clips (two sets)	1	Y7931	X	X	—	—	—	—
		4	Y7931	X	X	—	—	—	—
		12	Y7931	X	X	—	—	—	—
	60 A clips (two sets)	1	Y7941	—	X	X	—	—	—
		4	Y7941	—	X	X	—	—	—
		12	Y7941	—	X	X	—	—	—
	100 A clips (two sets)	1	Y7951	—	X	X	X	—	—
		4	Y7951	—	X	X	X	—	—
		12	Y7951	—	X	X	X	—	—
	200 A clips (two sets)	1	Y7961	—	—	X	X	X	—
		4	Y7961	—	—	X	X	X	—
		12	Y7961	—	—	X	X	X	—
	400 A clips (two sets)	1	Y7971	—	—	—	X	X *[18]*	X *[18]*
		4	Y7971	—	—	—	X	X *[18]*	X *[18]*
		12	Y7971	—	—	—	X	X *[18]*	X *[18]*
	Automatic molded case switch with 600 A fuse clips (two sets)	1	Y7920	—	—	—	—	—	X
		4	Y7920	—	—	—	—	—	X
		12	Y7920	—	—	—	—	—	X
	Automatic molded case switch with fuse clips 601–1200 A or less (two sets)	1	Y7921	—	—	—	—	—	X
		4	Y7921	—	—	—	—	—	X
		12	Y7921	—	—	—	—	—	X

Table 16.57: Reduced Voltage Controllers Only—Classes 8606, 8630, 8640 *[19]*

Factory Modifications	Enclosure Type	Form	NEMA Size						
			1 1PW 1 YD	2 2 PW 2 YD	3 3 PW 3 YD	4 4 PW 4 YD	5 5 PW 5 YD	6 6 PW 6 YD	7 7 PW 7 YD
Overload relays									
Substitute 9999SO4 isolated alarm contact on melting alloy overload relay	Any	Y342	X	X	X	X	X	X	— *[20]*
Substitute 9999SO5 isolated alarm contact on melting alloy overload relay	Any	Y344	X	X	X	X	X	X	— *[20]*
Motor Logic™ overload relays (Class 10/20 Selectable) *[21] [22]*	Any	H30	X	X	X	X	X	X	X
Add for thermal protector Class 8606	1, 4, 12	Y116	—	X	X	X	X	X	—
Coil transient suppressor, per coil	Any	Y145	X	X	X	X	X	—	—
Addition of terminal blocks (specify wired or unwired).									
—Wired, per terminal, each	1, 4, 12	G56 *[23]*	X	X	X	X	X	X	X
—Unwired, per terminal, each	1, 4, 12	G50 *[23]*	X	X	X	X	X	X	X

[16] Mag-Gard™ circuit breakers are not supplied nor recommended.
[17] Fuses not included.
[18] Consists of automatic molded case switch with two sets of 400 A fuse clips.
[19] NEMA 7 and 9 enclosures not available with Class 8600 devices.
[20] Size 7 uses a solid-state overload relay. See Class 8536 for complete details.
[21] Motor Logic overload relays are not available on Class 8640 Size 1PW to 4PW starters.
[22] See Motor Logic overload relays in the Full Voltage section in Digest Section 16 for additional Form options of Motor Logic overload relays.
[23] Addition of terminal block 9080CA or 9080GR6 only. The number of circuits is the same as the ending of the Form number. (Example: G505 is a 5–wire terminal block.) Available in groups of 5 only. Order in increments of 5. The number of circuits is the same as the ending of the Form number. (Example: G505 = 5 unwired terminals, G510 is 10 unwired terminals.)

© 2017 Schneider Electric
All Rights Reserved
2/15/2017

Type RO10V02

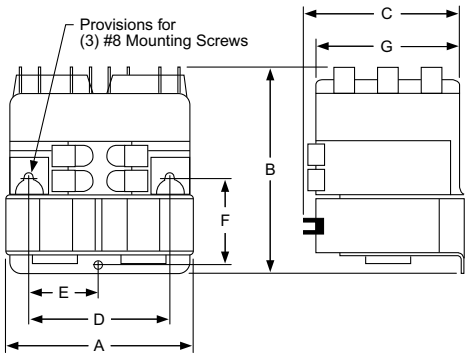

Selection—AC Reversing/Hoist Contactors

Class 8965 reversing hoist contactors meet the small space requirements found in electrical hoists, light duty cranes, door operators, and related products. They are designed to perform in the short periods of jogging experienced in hoist service. Note that these contactors must be mounted upright on the vertical plane; the contactors will not operate properly when mounted in any other position.

Table 16.59: AC Reversing/Hoist Contactors—600 Vac Maximum

No. of Poles	Horsepower Ratings				Power Terminals	With [1] Jumper Straps	Without [1] Jumper Straps
	115 V 1 Ø	230 V 1 Ø	230 V 3 Ø	460/575 V 3 Ø		Open Type	Open Type
3-Pole Poly-phase	1	1-1/2	3	3	Quick Connect	RO10 [2]	RO11 [2]
					Pressure Wire [3]	RO12 [2]	RO13 [2]

Table 16.60: Miscellaneous Hoist Contactor Kits For Use With Class 8965

Type	Series	Description	Class	Type	Series	Description	Class	Type
RO10 RO11 RO12 RO13	A & B	Armature Kit	9998	RP1 [4]	C	Armature Kit	9998	RP2 [4]
		Contact Carrier	Order as Part Number 3100206050			Contact Carrier	Order as Part Number 3100208150	

Table 16.61: Class 8965 Replacement Contact Kits

Device Type	Device Series	Class 9998 Kit Type	Device Series	Class 9998 Kit Type
RO10	A & B	RA10	C	RA14
RO11		RA11		RA15
RO12		RA12		RA16
RO13		RA13		RA17

Table 16.62: Auxiliary Contacts Separate Module

Description	Terminals	Class 9999 Type
1 N.O. Each Side	Quick Connect	R10
	Screw	R12
1 N.C. Each Side	Quick Connect	R11
	Screw	R13

Table 16.58: Approximate Dimensions (3 Poles per Contactor)

Type	A	B	C	D	E	F	G
RO10, 11	3.31 84	3.31 84	3.03 77	2.69 68	1.34 34	1.56 40	2.66 68
RO12, 13	3.31 84	3.69 94	2.69 68	2.69 68	1.34 34	1.56 40	2.66 68

Table 16.63: Coil Table

Voltage 60 Hz	Voltage 50 Hz	Voltage Code	Replacement Part Number
24	—	V01	3100240319 [5]
120	110	V02	3100240340 [5]
208/220	—	V21	3100240047 [6]
240	220	V03	3100240049 [6]
480	440	V06	3100240058 [6] [7]
600	550	V07	3100240060 [6]

Table 16.64: Cross Reference—Obsolete Devices

Obsolete Device		Replacement Device		Auxiliary Contact Required		Obsolete Device		Replacement Device		Auxiliary Contact Required	
Class	Type	Class	Type	Class	Type	Class	Type	Class	Type	Class	Type
8702 or 8965	HO3	8965	RO12	—	—	8965	RO2	8965	RO10	9999	R10
	HO4		RO12	9999	R12		RO2S1		RO11	9999	R10
	HO5		RO12	9999	R13		RO2S2		RO10	9999	R10
	HO6		RO12	—	—		RO3		RO10	9999	R11
	HO7		RO12	9999	R12		RO3S1		RO11	9999	R11
	HO8		RO12	9999	R13		RO3S2		RO10	9999	R11
8965	RG2S1	8965	RO10	9999	R10		RO3S3		RO10	9999	R11
	RG5S1		RO12	9999	R12		RO4		RO12	—	—
	RG5S2		RO12	9999	R12		RO4S1		RO13	—	—
	RO1		RO10	—	—		RO5		RO12	9999	R12
	RO1S1		RO11	—	—		RO5S1		RO13	9999	R12
	RO1S2		RO10	—	—		RO5S2		RO12	9999	R12
	RO1S3		RO11	—	—		RO6		RO12	9999	R13
	RO1S4		RO10	—	—		RO6S1		RO13	9999	R13
	RO1S5		RO10	—	—		RO6S2		RO12	9999	R13
	RO1S6		RO10	—	—						

Table 16.65: Application Data

Coils	Duty: Hoist Duty—H4 Intermittent Voltage Range: AC coils only; +10%, –15% of nominal
Burden	Inrush 76 VA, Sealed 27 VA

Table 16.66: Approvals

UL Component Recognized: File E78351, CCN NLDX2
CSA Certified: File LR60905, Class 3211 04

Table 16.67: How to Order

To Order Specify:	Catalog Number		
	Class	Type	Voltage and Frequency
• Class Number • Type Number • Voltage and Frequency	8695	RO10	V02

[1] Jumper straps connect the line side power terminals of the same phase between the forward (up) and reverse (down) contactors in common—i.e., L1 to L1, L2 to L2, and L3 to L3.
[2] Specify the voltage code to order this product. Refer to the standard voltage codes shown in Table 16.63.
[3] Coils rated 120 Vac or less are provided with quick connect terminals only.
[4] One armature per kit.
[5] Tape wound coils, 2 per package.
[6] Molded coil, 1 per package.
[7] Suitable for 440 V 50 Hz applications.

© 2017 Schneider Electric
All Rights Reserved

Motor Logic Plus—Class 9065

Motor Logic Plus

The Motor Logic Plus solid-state overload relay is separately powered and fully programmable. It is designed to protect 3-phase AC motor applications, 200–480 Vac or 600 Vac. The SSOLR has one Form C relay output rated for 300 Vac maximum.

Table 16.68: Motor Logic Plus—Replacement Only

Class 9065 SP Solid-State Overload Relay		
200–480 V	600 V	Current Range
SPB4	SPB6	0.5–2.3 A
SPC4	SPC6	2.0–9.0 A
SP14	SP16	6.0–27.0 A
SP24	SP26	10.0–45.0 A
SP34	SP36	20.0–90.0 A
SP44 *[1]*	SP46 *[1]*	60.0–135.0 A
SP54 *[2]*	SP56 *[2]*	120.0–270.0 A
SP64 *[3]*	SP66 *[3]*	240.0–540.0 A

Lug-Lug Kit

This kit can be field installed on separately mounted Motor Logic Plus overload relays.

Table 16.69: Lug-Lug Kit

For Use With		Parts Kit Description	Class 9999 Type
Class & Type	NEMA Size		
8536 SA-SH	1–6	Lug-Lug Kit	MLPL
9065 SP	1–6		

Software Kit

Solutions software program allows an IBM PC compatible computer (with Windows 95 or greater) to communicate with a Motor Logic Plus overload relay connected to an RS-485 network using Modbus protocol.

Table 16.70: Software Kit

For Use With		Parts Kit Description	Class 9999 Type
Class & Type	NEMA Size		
8536 SA–SH	1–6	Software Kit	MLPS
9065 SP			

Communication Module

This module allows the Motor Logic Plus overload relay to support RS-485 electrical communications standards. Up to 99 Motor Logic Plus overload relays can be controlled and monitored from one remote personal computer.

Table 16.71: How to Order

To Order Specify:	Catalog Number	
	Class	Type
• Class Number	9999	AC04
• Type Number		

Table 16.72: Communication Module

For Use With		Parts Kit Description	Class 9999 Type
Class & Type	NEMA Size		
8536 SA-SH	1–6	Modbus Communication Module	MB22
9065 SP			

Table 16.73: Full Voltage Controllers Only—Classes 8502, 8536, 8538, 8539, 8702, 8736, 8738, 8739, 8810, 8811 and 8812

Factory Modifications		Enclosure Type	Form	NEMA Size								
				00	0	1	2	3	4	5	6	7
Overload Relays	Overload Relays—General Modify Size 3 Type SE starters with melting alloy overload relays to accept Type FB quick trip or SB slow trip thermal units	Any	Y81	—	—	—	—	N/C	—	—	—	—
	Substitute 9999 SO4 isolated alarm contact (N.O.) on melting alloy overload relay	Any	Y342	X	X	X	X	X	X	*[4]*	X	*[5]*
	Substitute 9999 SO5 isolated alarm contact (N.C.) on melting alloy overload relay	Any	Y344	X	X	X	X	X	X	*[4]*	X	*[5]*

[1] Must use 150:5 external current transformer, purchased separately.
[2] Must use 300:5 external current transformer, purchased separately.
[3] Must use 600:5 external current transformer, purchased separately.
[4] For Classes 8736, 8738, and 8739 Type SG, consult the Customer Care Center at 1-888-778-2733.
[5] Size 7 uses a solid-state overload relay as standard. See Digest Section 16 for complete details.

© 2017 Schneider Electric
All Rights Reserved
2/15/2017

Conductor Ampacity Based on the 2014 National Electrical Code®

Ampacity based on NEC® Table 310.15(B)(16) [Formerly Table 310.16] – Allowable Ampacities of Insulated Conductors Rated Up to and Including 2000 Volts, 60° Through 90°C (140° Through 194°F), Not More Than Three Current-Carrying Conductors in Raceway, Cable, or Earth (Directly Buried), Based on Ambient Temperature of 30°C (86°F)*

For conduit fill see 2014 NEC Annex C.

For Information on Temperature Ratings of Terminations to Equipment See NEC 110.14(C).

Size	Temperature Rating of Conductor. [See Table 310.104(A).]						Size
	60°C (140°F)	75°C (167°F)	90°C (194°F)	60°C (140°F)	75°C (167°F)	90°C (194°F)	
AWG or kcmil	Types TW, UF	Types RHW, THHW, THW, THWN, XHHW, USE, ZW	Types TBS, SA, SIS, FEP, FEPB, MI, RHH, RHW-2, THHN, THHW, THW-2, THWN-2, USE-2, XHH, XHHW, XHHW-2, ZW-2	Types TW, UF	Types RHW, THHW, THW, THWN, XHHW, USE	Types TBS, SA, SIS, THHN, THHW, THW-2, THWN-2, RHH, RHW-2, USE-2, XHH, XHHW, XHHW-2, ZW-2	AWG or kcmil
	Copper			Aluminum or Copper-Clad Aluminum			
18**	—	—	14	—	—	—	—
16**	—	—	18	—	—	—	—
14**	15	20	25	—	—	—	—
12**	20	25	30	15	20	25	12**
10**	30	35	40	25	30	35	10**
8	40	50	55	35	40	45	8
6	55	65	75	40	50	55	6
4	70	85	95	55	65	75	4
3	85	100	115	65	75	85	3
2	95	115	130	75	90	100	2
1	110	130	145	85	100	115	1
1/0	125	150	170	100	120	135	1/0
2/0	145	175	195	115	135	150	2/0
3/0	165	200	225	130	155	175	3/0
4/0	195	230	260	150	180	205	4/0
250	215	255	290	170	205	230	250
300	240	285	320	195	230	260	300
350	260	310	350	210	250	280	350
400	280	335	380	225	270	305	400
500	320	380	430	260	310	350	500
600	350	420	475	285	340	385	600
700	385	460	520	315	375	425	700
750	400	475	535	320	385	435	750
800	410	490	555	330	395	445	800
900	435	520	585	355	425	480	900
1000	455	545	615	375	445	500	1000
1250	495	590	665	405	485	545	1250
1500	525	625	705	435	520	585	1500
1750	545	650	735	455	545	615	1750
2000	555	655	750	470	560	630	2000

* Refer to Section 310.15(B)(2)(a) for the ampacity correction factors where the ambient temperature is other than 30°C (86°F).
** See Section 240.4(D) for conductor overcurrent protection limitations.

120/240 Volt Single Phase Dwelling Services and Feeders [Section 310.15(B)(7)]

For one family dwellings and the individual dwelling units of two family and multifamily dwellings, service and feeder conductors supplied by a single phase, 120/240 volt system shall be permitted to be sized as follows:

1. For a service rated 100 through 400 A, the service conductors supplying the entire load associated with a one family dwelling, or the service conductors supplying the entire load associated with an individual dwelling unit in a two family or multifamily dwelling, shall be permitted to have an ampacity not less than 83 percent of the service rating.
2. For a feeder rated 100 through 400 A, the feeder conductors supplying the entire load associated with a one family dwelling, or the feeder conductors supplying the entire load associated with an individual dwelling unit in a two-family or multifamily dwelling, shall be permitted to have an ampacity not less than 83 percent of the feeder rating.
3. In no case shall a feeder for an individual dwelling unit be required to have an ampacity greater than that specified in (1) or (2).
4. Grounded conductors shall be permitted to be sized smaller than the ungrounded conductors, provided that the requirements of Sections 220.61 and 230.42 for service conductors or the requirements of Sections 215.2 and 220.61 for feeder conductors are met.

The conductor ampacity may require other correction or adjustment factors applicable to the conductor installation.

NEC 210.19 Conductors—Min. Ampacity and Size

For branch circuits not more than 600 volts, conductors shall have an ampacity not less than the maximum load to be served. Conductors shall be sized to carry not less than the larger of (a) or (b).

a. Where a branch circuit supplies continuous loads or any combination of continuous and noncontinuous loads, the minimum branch-circuit conductor size shall have an allowable ampacity not less than the noncontinuous load plus 125 percent of the continuous load.
b. The minimum branch-circuit conductor size shall have an allowable ampacity not less than the maximum load to be served after the application of any adjustment or correction factors.

Exception: If the assembly, including the overcurrent devices protecting the branch circuit(s), is listed for operation at 100 percent of its rating, the allowable ampacity of the branch-circuit conductors shall be permitted to be not less than the sum of the continuous load plus the noncontinuous load.

Correction Factors

Based on NEC Table 310.15(B)(2)(a)[Formerly Table 310(16)] Ambient Temperature Correction Factors Based on 30°C (86°F)

Ambient Temperature (°C)	Temperature Rating of Conductor			Ambient Temperature (°F)
	60°C	75°C	90°C	
10 or less	1.29	1.20	1.15	50 or less
11–15	1.22	1.15	1.12	51–59
16–20	1.15	1.11	1.08	60–68
21–25	1.08	1.05	1.04	69–77
26–30	1.00	1.00	1.00	78–86
31–35	0.91	0.94	0.96	87–95
36–40	0.82	0.88	0.91	96–104
41–45	0.71	0.82	0.87	105–113
46–50	0.58	0.75	0.82	114–122
51–55	0.41	0.67	0.76	123–131
56–60	—	0.58	0.71	132–140
61–65	—	0.47	0.65	141–149
66–70	—	0.33	0.58	150–158
71–75	—	—	0.50	159–167
76–80	—	—	0.41	168–176
81–85	—	—	0.29	177–185

Adjustment Factors – See NEC Table 310.15 (B)(3)(a)

Where the number of current-carrying conductors in a raceway or cable exceeds three, the allowable ampacities shall be reduced as shown in the following table:

Number of Conductors***	Percent of Values in Table 310.15(B)(16) through Table 310.15(B)(19) as Adjusted for Ambient Temperature if Necessary
4 through 6	80
7 through 9	70
10 through 20	50
21 through 30	45
31 through 40	40
41 and Above	35

*** Number of conductors is the total number of conductors in the raceway or cable, including spare conductors. The count shall be adjusted in accordance with Section 310.15(B)(5) and (6). The count shall not include conductors that are connected to electrical components but that cannot be simultaneously energized.

NEC 210.20(A) Continuous and Noncontinuous Loads

Where a branch-circuit supplies continuous loads or any combination of continuous and noncontinuous loads, the rating of the overcurrent device shall not be less than the noncontinuous load plus 125 percent of the continuous load.

NEC 240.4 Protection of Conductors

Conductors, other than flexible cords, flexible cables, and fixture wires, shall be protected against overcurrent in accordance with their ampacities specified in 310.15, unless otherwise permitted or required in 240.4(A) through (G).

NEC 240.4 (D) Small Conductors

Unless specifically permitted in 240.4(E) or (G), the overcurrent protection shall not exceed that required by (D)(1) through (D)(7) after any correction factors for ambient temperature and number of conductors have been applied.

NEC 430.22(A) Direct-Current Motor-Rectifier Supplied

For dc motors operating from a rectified power supply, the conductor ampacity on the input of the rectifier shall not be less than 125 percent of the rated input current to the rectifier. For dc motors operating from a rectified single-phase power supply, the conductors between the field wiring output terminals of the rectifier and the motor shall have an ampacity of not less than the following percentages of the motor full-load current rating:

(1) Where a rectifier bridge of the single-phase, half-wave type is used, 190 percent.

(2) Where a rectifier bridge of the single-phase, full-wave type is used, 150 percent.

© 2017 Schneider Electric
All Rights Reserved

Your fastest path to an answer

Customer Care App: Support is right at your fingertips

© 2015 Schneider Electric. All Rights Reserved. All trademarks are owned by Schneider Electric Industries SAS or its affiliated companies. • www.schneider-electric.com • 998-19127835_GMA-US

Scan here to download our Customer Care App today!

www.schneider-electric.us

888-778-2733

Schneider Electric is dedicated to maintaining and improving your system's reliability, productivity, comfort, and efficiency, and providing you with power, automation, and control, and building life cycle service solutions. Our services teams are available anywhere in the USA, any time you need us.

For field services support, visit **www.schneider-electric.us/go/services** or call **888-778-2733**.

Find the right solutions and special offers to fit your power system needs. Explore our interactive My Solutions Map.

Visit: http://www.schneider-electric.us/go/mysolutionsmap

Schneider Electric USA, Inc.

1415 S. Roselle Road
Palatine, IL 60067
Tel: 847-397-2600
Fax: 847-925-7500
www.schneider-electric.us

Document Number 0100CT1502

October 2015
Updated 2/15/2017