Series G Circuit Breakers

2.1 Introduction

Product Overview V4-T2-2
Typical Applications V4-T2-2
Eaton Molded Case Circuit Breakers in Assemblies V4-T2-3

2.2 Series G®

Globally Accepted Breakers

Product Overview V4-T2-4
Product Selection Overview V4-T2-6
Product Selection Guide V4-T2-7
Technical Data and Specifications V4-T2-9
Dimensions and Weights V4-T2-14
EG-Frame (15–125 Amperes) V4-T2-15
JG-Frame (63–250 Amperes) V4-T2-29
LG-Frame (250–630 Amperes) V4-T2-47
NG-Frame (320–1200 Amperes) V4-T2-65
RG-Frame (800–2500 Amperes) V4-T2-74
Motor Circuit Protectors (MCP) V4-T2-85
Motor Protector Circuit Breakers (MPCB) V4-T2-89
30 mA Ground Fault (Earth Leakage) Module V4-T2-92
Current Limiting Circuit Breaker Module V4-T2-96
High Instantaneous Circuit Breaker for Selective Coordination V4-T2-101
Special Features and Accessories V4-T2-104
Motor Operators V4-T2-112
Plug-In Blocks V4-T2-114
Drawout Cassette V4-T2-115

2.3 Series C®

North American Standards and Special Application Breakers

Product Overview V4-T2-116
Standards and Certifications V4-T2-117
Quick Reference V4-T2-118
G-Frame (15–100 Amperes) V4-T2-121
F-Frame (10–225 Amperes) V4-T2-135
J-Frame (70–250 Amperes) V4-T2-153
K-Frame (70–400 Amperes) V4-T2-161
L-Frame (125–600 Amperes) V4-T2-185
M-Frame (300–800 Amperes) V4-T2-211
N-Frame (400–1200 Amperes) V4-T2-222
R-Frame (800–2500 Amperes) V4-T2-237
Motor Circuit Protectors (MCP) V4-T2-256
Motor Protection Circuit Breakers (MPCB) V4-T2-267
Type ELC Current Limiter Attachment (Size 0–4) V4-T2-269
Current Limiting Circuit Breaker Module V4-T2-270
Internal Accessories V4-T2-273
External Accessories V4-T2-304

2.4 Definite Purpose

Optimized solution for HVAC/R and Pumping Applications.

Definite Purpose Molded Case Circuit Breakers V4-T2-331

2.5 Metering and Communications

Power Monitoring and Metering with Modbus RTU

PM3 Monitoring and Metering Module V4-T2-338

2.6 Specialty

Specialty Breakers

Engine Generator Circuit Breakers V4-T2-341
Direct Current Circuit Breakers V4-T2-347
PVGard™ Solar Circuit Breakers V4-T2-361
E2 Mining Service Breakers V4-T2-374
E2VAC Mining Vacuum Circuit Breaker V4-T2-400
Classic Mining Breakers V4-T2-403
Add-On Ground Fault Protection—Type GFR V4-T2-417

2.7 Handle Mechanisms

Handle Mechanisms—Series G V4-T2-420
Handle Mechanisms—Series C V4-T2-432

Learn Online Drawings Online

Series G E-Frame and Series C F-Frame Molded Case Circuit Breakers

Contents

Description	*Page*
Introduction	
Series G	**V4-T2-4**
Series C	**V4-T2-116**
Definite Purpose	**V4-T2-331**
PM3 Monitoring and Metering Module	**V4-T2-338**
Specialty Breakers	**V4-T2-341**

Learn Online Drawings Online

Product Overview

Series G vs. Series C

Eaton's Electrical Sector, under the Eaton brand, offers the widest variety of molded case circuit breakers available today. Designed for electrical and machinery OEMs serving a range of industries and applications, these proven designs incorporate the latest in innovation with the high reliability that has been our hallmark since the advent of the circuit breaker in the 1920s.

The Series C family ranges from 15–2500 amperes, and includes thermal-magnetic breakers, electronic trip breakers, molded case switches, motor circuit protectors, and specially designed breakers for engine generator, DC and mining applications.

The new Series G line features an average 35% size reduction, common field-installable internal accessories, and advanced trip unit functionality that eliminates the need for rating plugs. These breakers meet the requirements of UL®, CSA®, IEC, CCC and CE, allowing the OEM to standardize on a design that meets the needs of their global customer base.

Application Description

Eaton molded case circuit breakers cover the widest range of applications in the industry:

- Electrical OEMs
- Machinery OEMs
- Navy breakers:
  - UL 489 Supplement SB
  - MIL-C-17588
  - MIL-C-17361
  - ABS/NVR
- Mining breakers up to 1100 Vac
- Earth leakage
- DC breakers 125–750 Vdc
- Engine generator breakers 15–1200 amperes
- Current limiting breakers

Typical Applications

Machine Tool Control Panels and Motor Control Centers

Designed for these equipment requirements, including new world-class accessories.

Panelboards

As both main and branch circuit protection devices.

Feeder Pillars

In distribution systems to provide main and branch circuit protection.

Switchgear

In distribution systems to provide main and branch circuit protection up to 2500 amperes (RG-Frame).

Busbar Trunking Tap-Offs

In busbar trunking tap-offs to provide circuit protection.

Individual Enclosures

Completely assembled in enclosures to meet specific customer requirements.

Additional Applications

Special versions of each Eaton frame are available to provide safe equipment control and protection in mining and other applications. Contact your Eaton agent or distributor for additional information.

Typical Eaton Applications

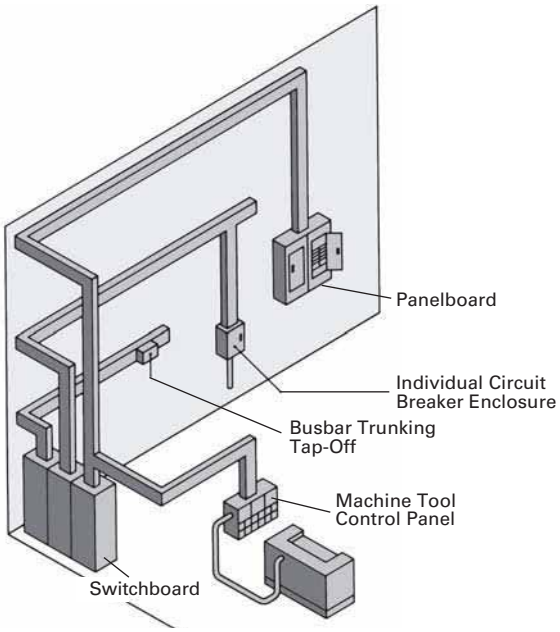

Eaton Molded Case Circuit Breakers in Assemblies

Applications

		Panelboards										Switchboards			Motor Control Centers				
Frame	Ampere Range	1A	2A	1A-LX	2A-LX	3A	3E	4	4B	4D	5P	PRL-C	PRL-i	PRL-C/i	Freedom	*IT.*	Enclosed Control	Bus Plugs	Enclosed Breaker
Series G																			
EG	15–160 ①	—	—	—	—	—	■	—	—	—	—	—	—	—	■	■	■	—	—
JG	20–250	—	—	—	—	—	—	—	—	■	—	—	—	—	—	—	—	—	—
LG	100–630 ②	■	■	—	—	■	■	■	■	■	—	■	—	■	—	—	—	—	■
NG	400–1600	—	—	—	—	—	—	—	■	■	—	■	■	■	■	■	—	—	■
RG	800–2500 ③	—	—	—	—	—	—	—	—	—	—	■	—	■	■	■	—	—	—
Series C																			
FD/ED	15–225	■	■	■	■	■	■	■	■	■	■	■	■	—	■	■	■	■	■
JD	70–250	■	■	—	—	■	—	■	■	■	■	■	■	—	■	■	■	■	■
KD	70–400	■	■	—	—	■	■	■	■	■	■	■	■	■	■	■	■	■	■
LD	400–600	—	—	—	—	■	—	■	■	■	■	■	■	■	■	■	■	■	■
MDL	300–800	—	—	—	—	—	—	■	■	■	■	■	■	■	■	■	■	■	■
ND	400–1200	—	—	—	—	—	—	■	■	■	■	■	■	■	■	■	■	■	■
RD	800–2500	—	—	—	—	—	—	—	—	—	■	■	-	■	■	■	—	—	—

Notes

① 125 amperes is the maximum UL and CSA rating for EG.
② 600 amperes is the maximum UL and CSA rating for LG.
③ 1200 amperes is the maximum UL and CSA rating for NG.

Series G, 15–2500 Amperes for UL, CSA and IEC Applications

Contents

Description	*Page*
Series G	
Standards and Certifications	**V4-T2-5**
Product Selection Overview	**V4-T2-6**
Product Selection Guide	**V4-T2-7**
Technical Data and Specifications	**V4-T2-9**
Dimensions and Weights	**V4-T2-14**
EG-Frame (15–125 Amperes)	**V4-T2-15**
JG-Frame (63–250 Amperes)	**V4-T2-29**
LG-Frame (250–630 Amperes)	**V4-T2-47**
NG-Frame (320–1200 Amperes)	**V4-T2-65**
RG-Frame (800–2500 Amperes)	**V4-T2-74**
Motor Circuit Protectors (MCP)	**V4-T2-85**
Motor Protector Circuit Breakers (MPCB)	**V4-T2-89**
30 mA Ground Fault (Earth Leakage) Module	**V4-T2-92**
Current Limiting Circuit Breaker Module	**V4-T2-96**
High Instantaneous Circuit Breaker for Selective Coordination	**V4-T2-101**
Special Features and Accessories	**V4-T2-104**
Motor Operators	**V4-T2-112**
Plug-In Blocks	**V4-T2-114**
Drawout Cassette	**V4-T2-115**

Learn Online Drawings Online

Product Overview

Series G, 15–2500 Amperes for UL, CSA and IEC Applications

Eaton Series G molded case circuit breakers provide increased performance in considerably less space than standard circuit breakers or comparable fusible devices.

The "G" signifies global applications: Series G circuit breakers are marked with UL, CSA, CE, IEC and KEMA KEUR listings. Other advantages include:

- Field-fit accessories
- Common accessories through 630 amperes
- Electronic trip units from 20 to 2500 amperes
- UL-listed and IEC-rated, 30 mA ground fault/earth leakage modules
- Built-in ground fault protection down to 20 amperes

The EG, JG and LG frames are designed around space-saving footprints. The NG and RG use the proven Eaton Series C ND and RD designs.

The Series G family includes five frame sizes in ratings from 15 to 2500 amperes. Series G offers a choice of several interrupting capacities up to 200 kA at 480 volts AC (200 kA at 240 volts AC).

Series G molded case circuit breakers are also available in direct current options. Please see Specialty Breakers **Section 2.6** for more details.

Standard calibration is 40 °C. For applications in high ambient temperature conditions, 50 °C factory calibration is available on thermal-magnetic breakers (not UL).

The Most Logically Designed Contact Assembly

The flexibility and outstanding performance characteristics of Eaton circuit breakers are made possible by the best contact designs in circuit breaker history. Our technology creates a high-speed "blow-open" action using the electromechanical forces produced by high-level fault currents.

Eaton circuit breakers are operated by a toggle-type mechanism that is mechanically trip-free from the handle so that the contacts cannot be held closed against short circuit currents. Tripping due to overload or short circuits is clearly indicated by the position on the handle. This remarkably fast and dependable contact action is designed to enhance safety.

Thorough In-Plant Testing

The quality, dependability and reliability of every Eaton Circuit Breaker is ensured by a thorough program of in-plant testing. Two calibration tests are conducted on every pole of every circuit breaker to verify the trip mechanism, operating mechanism, continuity and accuracy.

Current Limiting Characteristics

Circuit breakers are current limiting because of their high repulsion contact arrangement and use of state-of-the-art arc extinguishing technology.

Eaton offers one of the most complete lines of current limiting breakers in the industry. The industrial breakers are available in current limiting versions with interrupting capacities up to 200 kA at 480 V without fuses in the same physical size as standard and high interrupting capacity breakers.

Operating Mechanisms

Eaton circuit breakers have a toggle handle operating mechanism, which also serves as a switching position indicator. The indicator shows the positions of: ON, OFF and TRIPPED.

The toggle handle snaps into the TRIPPED position if the breaker is tripped by one of its overcurrent, short circuit, shunt or undervoltage releases. Before the circuit breaker can be reclosed following a trip-out, the toggle handle must be brought beyond the OFF position (RESET). The circuit breaker can then be reclosed.

As an additional switching position indicator for EG- to RG-Frame circuit breakers, there are two windows on the right and on the left of the toggle handle, in which the switching state is indicated by means of the colors red, green and white corresponding to the ON, OFF and TRIPPED positions respectively.

Positions of the Toggle Handle Drive

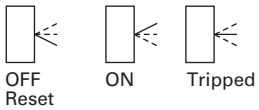

Standards and Certifications

Eaton Series G circuit breakers meet applicable UL 489 and IEC 60947-2 standards.

Molded case circuit breakers from Eaton are designed to conform with the following international standards:

- Australian Standard AS 2184 and AS 3947-2 molded case circuit breakers
- British Standards Institution Standard EN60947.2
- International Electromechanical Commission Recommendations IEC 60947.2 circuit breakers

  CE
- Japanese T-Mark standard molded case circuit breakers
- National Electrical Manufacturers Association Standards Publication No. AB1-1993 molded case circuit breakers
- South African Bureau of Standards, Standard SANS 156, Standard Specification for molded case circuit breakers
- Swiss Electro-Technical Association Standard SEV 947.2, Safety Regulations for circuit breakers
- Union Technique de l'Electricite Standard NF C 63-120, low voltage switchgear and control gear circuit breaker requirements
- Verband Deutscher Elektrotechnike (Association of German Electrical Engineers) Standard VDE 0660, low voltage switchgear and control gear, circuit breakers

Global Third-Party Certification

Certification marks ensure product compliance with the total standard via the third party witnessing of tests by globally recognized independent certification organizations.

KEMA is a highly recognized, independent international organization that offers certification and inspection facilities for equipment in many industries. The KEMA-KEUR mark is the highest certification an electrical product can receive from KEMA. Our IEC 60947-2 molded case circuit breakers are KEMA tested and certified. These breakers are also listed in accordance with UL 489, as well as CSA C22.2 No. 5-02.

KEMA, UL and CSA provide ongoing follow-up testing and inspections to ensure that Eaton molded case circuit breakers continue to meet their exacting standards.

ISO Certification

Eaton circuit breakers are manufactured in ISO® certified facilities.

Product Selection Overview

Electronic Trip Units (Digitrip RMS Trip Units)—Multi-Function Electronic Trip Units for All Applications

True rms Sensing

Digitrip RMS trip units use Eaton's microprocessor-based intelligence to provide true rms sensing, permitting increased accuracy and reliable system protection. True rms sensing is not susceptible to nuisance tripping when waveforms containing high harmonic currents are present.

Digitrip RMS 310+

Digitrip RMS 310+ electronic trip units are available with Eaton Series G circuit breakers JG, LG, NG and RG, as well as Series C FD, KD, LD and MDL circuit breakers.

Digitrip 310+ trip units are equipped with an integrated I_r switch that allows users to modify the continuous current rating of the breaker without having to replace a rating plug. This provides further flexibility for coordination in systems. The trip units may be used in 50 Hz or 60 Hz applications. The Digitrip 310+ offers true rms sensing, is front adjustable and has an optional local display of current and cause of trip.

Curve Shaping

When selectively coordinated systems are called for, Digitrip RMS 310+ will provide a cost-effective solution for a variety of applications.

The standard Digitrip RMS 310+ includes an adjustable short time pickup setting encompassing an I^2t ramp function that provides the basic LS curve shaping function.

Digitrip 310+ trip units also include selectable long time delay (t_{LD}) and pickup settings (I_r). A rating plug is not required.

The optional Digitrip RMS 310+ LSI and LSIG provide additional flat response short time delay adjustments and an instantaneous setting to provide LSI curve shaping capability.

Digitrip RMS 310+ LSG and LSIG units are available with ground fault pickup and flat response ground fault delay. Ground fault alarm options are available with trip and no trip functionality as a means to notify users of a ground fault condition with the option to maintain the breaker online.

Digitrip RMS 310+ trip units can effectively coordinate with both sophisticated upstream power breakers as well as downstream thermal-magnetic breakers, making Digitrip RMS 310+ trip units the cost-effective reliable choice for selectively coordinated systems.

Thermal Memory

All Digitrip RMS trip units incorporate a long delay. Thermal memory prevents the system from cumulative overheating due to repeated overcurrent events that may occur in quick succession.

Field Testing

A field test kit is available for Digitrip RMS 310+ trip units.

Arcflash Reduction Maintenance Mode (ARMS)

ARMS is an available feature on KD, LG, LD, MDL, NG and RG frames with 310+ electronic trip units. This feature increases worker safety by providing an accelerated instantaneous trip unit to reduce arc flash. Additionally, LG, NG and RG frames with the ARMS feature include a fully adjustable instantaneous setting.

Digitrip RMS 610 and 910

Digitrip RMS 610 and 910 trip units are available with Eaton R-Frame circuit breakers 800 through 2500 amperes. Digitrip 610 and 910 trip units provide unparalleled system protection with the added convenience of a local display.

Curve Shaping

Digitrip RMS 610 and 910 trip units are available with up to nine curve shaping choices achieved by adjusting up to seven switches on the front of the unit for optimum system coordination. Maximum curve shaping flexibility is provided by dependent long and short delay adjustments that are long delay pickup (I_r) based, depicted on the front of the unit by the blue portion of the time-current curve.

Additional coordination capability can be provided by utilizing the short delay and ground fault zone selective interlocking features available on these trip units.

System Diagnostics

Digitrip RMS 610 and 910 models of trip units provide long delay, short delay, instantaneous, and ground fault cause of trip LEDs on the front of the unit. Their display shows a magnitude of trip information, as well as remote signal contacts, for improved system alarming.

System Monitoring

Digitrip 610 and 910 trip units have the capability to monitor phase currents, as well as neutral or ground currents. This information is displayed on a large digital display mounted on the unit.

Digitrip RMS 910 trip units can also provide the user with power and energy monitoring capability. Peak power demand, present power demand, and total energy, as well as forward and reverse energy can be monitored with this unit.

Digitrip RMS 910 trip units have the additional capability of monitoring line-to-line voltage, as well as system power factor. Both parameters are displayed in the digital display window and are supported by LEDs to indicate which parameter is being displayed.

Harmonics Monitoring

Digitrip RMS 910 trip units are capable of displaying values of current harmonics in the digital display window. Percentage of harmonic content can be monitored for each phase, up to the 27th harmonic. Additionally, a total harmonic distortion value can be calculated and displayed.

Communications

Digitrip RMS 910 units have built-in communications options to allow all protection, monitoring, and control information to be transmitted back to a central location via the Eaton PowerNet™ system.

Field Testing

Integral field testing capability is provided on all 610 and 910 trip units. No additional test set is needed to perform both trip and no trip field testing.

Product Selection Guide

Electronic Trip Units

Digitrip—RMS 310+, 610 and 910

RMS 310+

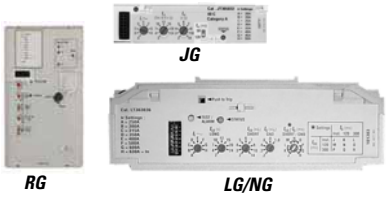

RMS 610

RMS 910

Breaker Type					
Series G frame(s)		JG-, LG-, NG- and RG-Frames		RG-Frame	RG-Frame
Ampere rating		20–2500 A		800–2500 A	800–2500 A
Interrupting rating at 415 V		35, 70, 100 kA		70, 100 kA	70, 100 kA
Trip Unit Sensing					
rms sensing		Yes		Yes	Yes
Protection and Coordination					
Protection	Ordering options	LS, LSG	LSI, LSIG	LI, LS, LSI, LIG, LSG, LSIG	LI, LS, LSI, LIG, LSG, LSIG
	Fixed rating plug (I_n) ①	Yes	Yes	Yes	Yes
	Overtemperature trip	Yes	Yes	Yes	Yes
Long delay	Adjustable I_r switch	Yes	Yes	No	No
	Long delay setting	VAR/frame	VAR/frame	0.5–1.0 x (I_n)	0.5–1.0 x (I_n)
	Long delay time I^2t at 6x	10 seconds ②	10 seconds ②	2–24 seconds	2–24 seconds
	Long delay thermal memory	Yes	Yes	Yes	Yes
	High load alarm	1.05 I_r	1.05 I_r	0.85 x I_r	0.85 x I_r
Short delay	Short delay setting	VAR/frame ④	VAR/frame ④	200–600% S1 and S2 x (I_r)	200–600% S1 and S2 x (I_r)
	Short delay time I^2t	100 ms	No	100, 300, 500 ms	100, 300, 500 ms
	Short delay time flat	No	I–300 ms	100–500 ms	100–500 ms
	Short delay time ZSI	No	Yes	Yes	Yes
Instantaneous	Independent adjustable Inst. setting	No	Yes ⑤	Yes	Yes
	Instantaneous setting	No	VAR/frame	200–600% M1 and M2 x (I_n)	200–600% M1 and M2 x (I_n)
	Discriminator	No	No	Yes ⑥	Yes ⑥
	Instantaneous override	Yes	Yes	Yes	Yes
Ground fault	Ground fault setting	VAR/Frame ⑦	VAR/Frame ⑦	25–100% x (I_n) ⑦	25–100% x (I_n) ⑦
	Ground fault delay I^2t at 0.62x	No	No	100, 300, 500 ms	100, 300, 500 ms
	Ground fault delay flat	I–300 ms	I–300 ms	100–500 ms	100–500 ms
	Ground fault ZSI	No	Yes	Yes	Yes
	Ground fault thermal memory	No	No	Yes	Yes

Notes

I_n = Rating plug rating.
I_r = Long delay setting.

① 310+ trip units have selectable settings instead of a rating plug.
② 310+ trip units have adjustable long delay times of 2–24 seconds, except NG 310+ for 800 A frame, for which it is 2–14 seconds.
③ 310+ details are included by frame in **Pages V4-T2-44** (JG), **V4-T2-62** (LG), **V4-T2-72** (NG), and **V4-T2-83** (RG).
④ JG/LG: 2X–14X (I_n); NG: 2X–8X (I_n); RG: 2X–9X (I_n); 2500 ampere RG-Frame 2X–6X% x (I_n).
⑤ LG, NG and RG ALSI and ALSIG 310+ trip units include an independently adjustable Instantaneous (I_i) setting.
⑥ LS, LSG only.
⑦ Not to exceed 1200 amperes.

Digitrip—RMS 310+, 610 and 910, continued

	RMS 310+		RMS 610	RMS 910
	RG	JG LG/NG		
	LS, LSG	**LSI, LSIG**	**LSI, LSIG, LSIG (A)**	**LSI (A), LSIG**
System Diagnostics				
Cause of trip LEDs	Yes ①②	Yes ①②	Yes	Yes
Magnitude of trip information	No	No	Yes	Yes
Remote signal contacts	No	No	Yes	Yes
System Monitoring				
Digital display	Yes ③	Yes ③	Yes	Yes
Current	Yes ③	Yes ③	Yes	Yes
Voltage	No	No	No	Yes
Power and energy	No	No	No	Yes
Power quality—harmonics	No	No	No	Yes
Power factor	No	No	No	Yes
System Communications				
PowerNet	No	No	No	Yes
Field Testing				
Testing method	Test set ④	Test set ④	Integral	Integral

Notes

① Using cause of trip module (catalog number **TRIP-LED**).
② RG 310+ trip units include integrated cause of trip LEDs.
③ Using ammeter or remote ammeter/cause of trip display (catalog number **DIGIVIEW** and **DIGIVIEWR06**).
④ Test kit available for field testing 310+ trip units (catalog number **MTST230V**).

Technical Data and Specifications

Ratings

Frames EG, JG and LG

EG

JG

LG

Maximum rated current (amperes)			125, 160 ①								250						400, 630 ②						
Breaker type ③			B	B	E	S	S	H	H	C	E	S	H	C	U	X	E	S	H	C	U	X
Number of poles			1	2, 3, 4	2, 3, 4	1	2, 3, 4	1	2, 3, 4	3, 4	2, 3, 4	2, 3, 4	2, 3, 4	3, 4	3, 4	3, 4	3, 4	3, 4	3, 4	3, 4	3, 4	3, 4
Breaker Capacity (kA rms) Vac 50–60 Hz																							
NEMA®, UL, CSA	240 Vac		25	25	35	85	85	100	100	200	65	85	100	200	200	200	65	85	100	200	200	200
	480 Vac		—	18	25	—	35	—	65	100	25	35	65	100	150	200	35	50	65	100	150	200
	600 Vac ④		—	—	18	—	22	—	25	35	18	18	25	35	50	50	18	25	35	50	65	65
	125/250 Vdc ⑤		10 ⑥	10	10	35 ⑥	35	42 ⑥	42	42	10	22	22	42	50	50	22	22	42	42	50	50
IEC 60947-2	220–240 Vac	I_{cu}	25	25	35	85	85	100	100	200	65	85	100	200	200	200	65	85	100	200	200	200
		I_{cs}	25	25	35	43	43	50	50	200	65	85	100	200	200	200	65	85	100	200	200	200
	380–415 Vac	I_{cu}	—	18	25	—	40	—	70	100	25	40	70	100	150	200	35	50	70	100	150	200
		I_{cs}	—	18	25	—	30	—	35	100	25	40	70	100	150	200	35	50	53	100	150	200
	660–690 Vac	I_{cu}	—	—	—	—	—	—	—	—	12	12	14	16	18	18	12	20	25	30	35	35
		I_{cs}	—	—	—	—	—	—	—	—	6	6	7	12	14	14	6	10	13	15	18	18
	125/250 Vdc ⑤	I_{cu}	10 ⑥	10	10	35 ⑥	35	42 ⑥	42	42	10	22	22	42	50	50	22	22	42	42	50	50
		I_{cs}	10 ⑥	10	10	35 ⑥	35	42 ⑥	42	42	10	22	22	42	50	50	22	22	42	42	50	50
Ampere range			15–160 A ①								20–250 A						100–630 A ②					
Trip Units F = Fixed A = Adjustable T = Thermal M = Magnetic			FT-FM AT-FM								FT-AM AT-AM Electronic (Digitrip RMS 310)						FT-AM AT-AM Electronic (Digitrip RMS 310)					
	Interchangeable		—	—	—	—	—	—	—	—	■	■	■	■	■	■	■	■	■	■	■	■
	Built-in		■	■	■	■	■	■	■	■	■	■	■	■	■	■	■	■	■	■	■	■
Thermal magnetic	Fixed thermal		■	■	■	■	■	■	■	■	■	■	■	■	■	■	■	■	■	■	■	■
	Adjustable thermal		■	■	■	■	■	■	■	■	■	■	■	■	■	■	■	■	■	■	■	■
	Magnetic		Fixed								Adjustable						Adjustable					
Electronic RMS ⑦	LS		—	—	—	—	—	—	—	—	■	■	■	■	■	■	■	■	■	■	■	■
	LSI		—	—	—	—	—	—	—	—	■	■	■	■	■	■	■	■	■	■	■	■
	LSG		—	—	—	—	—	—	—	—	■	■	■	■	■	■	■	■	■	■	■	■
	LSIG		—	—	—	—	—	—	—	—	■	■	■	■	■	■	■	■	■	■	■	■
	ALSI		—	—	—	—	—	—	—	—	—	—	—	—	—	—	■	■	■	■	■	■
	ALSIG		—	—	—	—	—	—	—	—	—	—	—	—	—	—	■	■	■	■	■	■
Utilization category			A	A	A	A	A	A	A	A	A	A	A	A	A	A	A	A	A	A	A	A

Notes

① 125 amperes is the maximum UL and CSA rating for the EG.
② 630 amperes is not a UL or CSA listed rating. 600 amperes is the maximum UL and CSA listed rating for the LG.
③ Breaker type C, U and X are current limiting per UL 489.
④ EG breaker rated 600/347 Vac.
⑤ Two poles in series.
⑥ 125 Vdc only for single-pole breakers.
⑦ Not suitable for DC application. Four-pole ground fault not available.

Frames NG and RG

NG

RG

Maximum rated current (amperes)			800, 1200	800, 1200	800, 1200	1600 ①	800	1600, 2000, 2500	1600, 2000, 2500
Breaker type			S	H	C ②	S	U	H	C ②
Number of poles			2, 3, 4	2, 3, 4	2, 3, 4	3	3	3, 4	3, 4
Breaker Capacity (kA rms) AC 50–60 Hz									
NEMA, UL, CSA	240 Vac		85	100	200	—	200	125	200
	480 Vac		50	65	100	—	150	65	100
	600 Vac		25	35	65	—	65	50	65
IEC 60947-2	220–240 Vac	I_{cu}	85	100	200	85	—	135	200
		I_{cs}	85	100	100	85	—	100	100
	380–415 Vac	I_{cu}	50	70	100	50	—	70	100
		I_{cs}	50	50	50	50	—	50	50
	660–690 Vac	I_{cu}	20 ③	25 ③	35	20 ③	—	25 ③	35 ③
		I_{cs}	10	13	18	10	—	13	18
	250 Vdc	I_{cu}	—	—	—	—	—	—	—
		I_{cs}	—	—	—	—	—	—	—
Ampere range			400–1200 A	400–1200 A	400–1200 A	1600 A	800 A	800–2500 A	800–2500 A
Trip units			Electronic (Digitrip RMS 310+)					Electronic (Digitrip RMS 310+ and 910)	
	Interchangeable		—	—	—	—	—	■ ⑤	■ ⑤
	Built-in		■	■	■	■	■	■	■
Electronic ④	LI		—	—	—	—	—	■ ⑥	■ ⑥
	LS		■	■	■	■	■	■	■
	LSI		■	■	■	■	■	■	■
	LIG		—	—	—	—	—	■ ⑥	■ ⑥
	LSG		■	■	■	■	■	■	■
	LSIG		■	■	■	■	■	■	■
	ALSI		■	■	■	■	—	■	■
	ALSIG		■	■	■	■	—	■	■
Utilization category			A	A	A	A	A	A	A

Notes

① NG 1600 ampere frame is not UL or CSA listed.
② Not KEMA-KEUR listed.
③ IEC 60947-2 H.5 Annex H is not KEMA-KEUR tested.
④ Not suitable for DC application. Four-pole ground fault not available.
⑤ RG 310+ are interchangeable with the exception of: FROM not ground fault equipped TO ground fault equipped
⑥ Available only on Digitrip 910 trip units.

General Specifications

All Series G Frames

	EG		JG		LG		NG	RG
Maximum rated current I_n depending on the version	160 A ①		250 A		400, 630 A ②		800, 1200, 1600 A ③	1600, 2000, 2500 A
Rated insulation voltage U, according to IEC 60947-2								
Main conducting paths	500 Vac		750 Vac		750 Vac		750 Vac	750 Vac
Auxiliary circuits	500 Vac		690 Vac		690 Vac		690 Vac	690 Vac
Rated impulse withstand voltage U_{imp}								
Main conducting paths	6 kV		8 kV		8 kV		8 kV	8 kV
Auxiliary circuits	4 kV		4 kV		4 kV		4 kV	4 kV
Rated operational voltage U_e								
IEC	415 Vac		690 Vac		690 Vac		690 Vac	690 Vac
NEMA	600Y/347 Vac		600 Vac		600 Vac		600 Vac	600 Vac
UL and CSA listed	Yes ①		Yes		Yes ②		Yes ③	Yes
Permissible ambient temperature	–20 ° to 70 °C		–20 ° to 70 °C		–20 ° to 70 °C		–20 ° to 70 °C	–20 ° to 70 °C
Permissible load for various ambient temperatures close to the circuit breaker, related to the rated current of the circuit breaker	④	⑤	④	⑤	④	⑤	—	—
Circuit breakers for plant protection								
At 40 °C	100%	100%	100%	100%	100%	100%	100%	100%
At 50 °C	96%	92%	96%	94%	96%	91%	91%	91%
At 55 °C	93%	87%	94%	90%	93%	86%	85%	85%
At 60 °C	91%	83%	92%	87%	90%	82%	81%	81%
At 70 °C	86%	73%	88%	80%	84%	70%	70%	70%
Circuit breakers for motor protection								
At 40 °C	—		100%		100%		—	—
At 50 °C	—		100%		100%		—	—
At 55 °C	—		100%		100%		—	—
At 60 °C	—		100%		100%		—	—
At 70 °C	—		90%		90%		—	—
Circuit breakers for starter combinations and isolating circuit breakers								
At 40 °C	100%		100%		100%		100%	100%
At 50 °C	100%		100%		100%		91%	91%
At 55 °C	96%		96%		95%		85%	85%
At 60 °C	91%		82%		90%		81%	81%
At 70 °C	86%		88%		84%		—	—
Rated short-circuit breaking capacity (DC) Not for circuit breakers for motor protection (Time constant t = 10 rms)								
Two conducting paths in series For EG to LG up to 250 Vdc	42 kA max.		42 kA max.		42 kA max.		⑥	⑥
NEMA (time constant t = 8 rms) Two conducting paths in series 250 Vdc	42 kA max.		42 kA max.		42 kA max.		⑥	⑥

Notes

① 125 amperes is the maximum UL and CSA rating for the EG.
② 630 amperes is not a UL or CSA listed rating. 600 amperes is the maximum UL and CSA rating for the LG.
③ 1200 amperes is the maximum UL and CSA rating for the NG.
④ Thermal overload release set to the lower value.
⑤ Thermal overload release set to the upper value.
⑥ Not suitable for DC switching.

All Series G Frames, continued

	EG	JG	LG		NG	RG
Main switch characteristics according to IEC 60947-2 in combination with lockable rotary drives	Yes	Yes	Yes		Yes	Yes
Rated short circuit breaking capacity according to IEC 60947-2 (at AC 50/60 Hz)	For rated short circuit breaking capacity, see **Page V4-T2-9**.					
Endurance (operating cycles)	10,000	10,000	8,000		3,000	3,000
Maximum switching frequency	300 1/h	240 1/h	240 1/h		60 1/h	60 1/h
Conductor cross sections and terminal types for main conductors	Box terminals	Box terminals	Box terminals	Flat bar terminals	Flat bar terminals	Flat bar terminals
Solid or stranded	2.5 to 95 mm^2	50 to 150 mm^2	95 to 240 mm^2	—	—	—
Finely stranded with end sleeve	2.5 to 50/70 mm^2	35 to 120 mm^2	70 to 150 mm^2	—	—	—
Busbar	—	—	—	600 A	Optional	Optional
Tightening torque for box terminals	5.6 Nm	20 Nm	42 Nm	31 Nm	31 Nm	—
Tightening torque for busbar connection pieces	5.6 Nm	15 Nm	30 Nm	6 Nm	50 Nm	20 Nm
Conductor cross sections for auxiliary circuits with terminal connection or terminal strip						
Solid	0.75 to 2.5 mm^2	0.75 to 2.5 mm^2	0.75 to 2.5 mm^2		Up to 2x4 mm^2	Up to 2x4 mm^2
Finely stranded with end sleeve	0.75 to 2.5 mm^2	0.75 to 2.5 mm^2	0.75 to 2.5 mm^2		Up to 2x2.5 mm^2	Up to 2x2.5 mm^2
With brought-out cable ends	—	0.82 (AWG 18) mm^2	0.82 (AWG 18) mm^2		0.82 (AWG 18) mm^2	0.82 (AWG 18) mm^2
Tightening torque for fitting screws	—	0.8 to 1.4 Nm	0.8 to 1.4 Nm		0.8 to 1.4 Nm	0.8 to 1.4 Nm
Power loss per circuit breaker at maximum rated current I_n (the power losses of the undervoltage releases ("r" releases) must be observed if necessary) at three-phase symmetrical load)			400 A:	600 A:		
For plant protection	40 W	45 W	65 W	120 W	87/210 W	220/270/400 W
As isolating circuit breaker	40 W	45 W	65 W	120 W	87/210 W	220/270/400 W
For starter combinations	40 W	45 W	65 W	120 W	—	—
For motor protection	—	45 W	65 W	120 W	—	—
Permissible mounting position		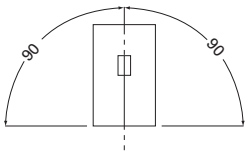			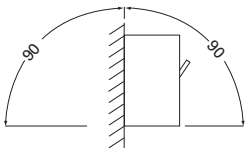	
Arc spacing— suitable for reverse-feed applications	Yes (except HMCPE)	Yes	Yes		Yes	Yes
Auxiliary Switches						
Rated thermal current I_{th}	6A	6A	6A		6A	6A
Rated making capacity	20 A	20 A	20 A		20 A	20 A
	AC-14	**AC-14**	**AC-14**		**AC-15**	**AC-15**
Rated operational voltage	230/400/600 V	230/400/600 V	230/400/600 V		600 V	600 V
Rated operational current	6/3/0.25 A	6/3/0.25 A	6/3/0.25 A		6A	6A
					DC-13	**DC-13**
Rated operational voltage	125/250V	125/250V	125/250V		125/250V	125/250V
Rated operational current	0.5/0.15 A	0.5/0.15 A	0.5/0.15 A		0.5/0.25 A	0.5/0.25 A
Backup fuse	6/4/4 A	(4) 6/4/4 A	(4) 6/4/4 A		(4) 6/4/4 A	(4) 6/4/4 A
Miniature circuit breaker	6/4 A	6/4 A	6/4 A		6/4 A	6/4 A

All Series G Frames, continued

	EG	JG	LG	NG	RG
Releases					
Undervoltage releases ("r" releases)					
Response voltage:					
Drop (breaker tripped) U_s	35–70%	35–70%	35–70%	35–70%	35–70%
Pickup (breaker may be switched on) U_s	85–110%	85–110%	85–110%	85–110%	85–110%
Power consumption in continuous operation at:					
50/60 Hz 12 Vac	—	—	—	1.9 VA	2.9 VA
50/60 Hz 24 Vac	0.72 VA	3.9 VA	3.9 VA	2.4 VA	3.1 VA
50/60 Hz 48–60 Vac	1.15–1.78 VA	2.5–3.8 VA	2.5–3.8 VA	2.3–4.1 VA	3.4–6.0 VA
50/60 Hz 110–127 Vac	0.96–1.25 VA	1.8–2.4 VA	1.8–2.4 VA	3.4–4.2 VA	3.3–3.8 VA
50/60 Hz 208–240 Vac	1.28–1.68 VA	2.7–3.8 VA	2.7–3.8 VA	4.8–6.5 VA	4.2–7.2 VA
50/60 Hz 380–500 Vac	2.2–3.9 VA	3.4–5.8 VA	3.4–5.8 VA	6.8–12.0 VA	3.8–10.0 VA
50/60 Hz 525–600 Vac	3.4–4.3 VA	3.4–4.3 VA	3.4–4.3 VA	—	—
12 Vdc	—	—	—	2.6W	3.4W
24 Vdc	0.70 W	3.1W	3.1W	3.6W	4.3W
48–60 Vdc	1.12–1.76W	2.0–3.1W	2.0–3.1W	3.5–5.5W	4.8–7.2W
110–125 Vdc	0.94–1.21W	1.6–2.2W	1.6–2.2W	2.9–3.6W	3.3–3.8W
220–250 Vdc	1.45–1.86W	3.1–4W	3.1–4W	4.8–6.3W	6.6–7.5W
Maximum opening time	50 ms	50 ms	50 ms	62 ms	62 ms
Shunt Trips					
Shunt trips ("f" releases)					
Response voltage:					
Pickup (breaker tripped) U_s	70–110%	70–110%	70–110%	70–110%	70–110%
Power consumption in (short time) at:					
50/60 Hz 24 Vac	10–41 VA	87–405 VA	87–405 VA	98–475 VA	612 VA
50/60 Hz 48–60 Vac	139–210 VA	710–1105 VA	710–1105 VA	24–50 VA	403–666 VA
50/60 Hz 48–127 Vac	—	—	—	—	—
50/60 Hz 110–240 Vac	83–360 VA	66–432 VA	66–432 VA	67–432 VA	396–1896 VA
50/60 Hz 380–440 Vac	—	127–188 VA	127–188 VA	76–110 VA	1596–2156 VA
50/60 Hz 380–600 Vac	418–1080 VA	—	—	—	—
50/60 Hz 480–600 Vac	—	34–60 VA	34–60 VA	19–42 VA	230–384 VA
12–24 Vdc	29–120 W	164–631 W	164–631 W	145–610 W	396 W
48–60 Vdc	475–720 W	830–1580 W	830–1580 W	67–102 W	341–528 W
110–125 Vdc	99–121 W	112–150 W	112–150 W	121–150 W	264–350 W
220–250 Vdc	—	40–58W	40–58 W	46–55 W	374–475 W
Maximum load duration	Interrupts automatically	Interrupts automatically	Interrupts automatically	Interrupts automatically	Interrupts automatically
Maximum opening time	50 ms	50 ms	50 ms	62 ms	62 ms
Molded Case Switch (with High Magnetic Trip)					
Unfused kAIC at 480 Vac (415 Vac)	65 (70)	65 (70)	65 (70)	65 (70)	65 (70)
Self-protected, will trip above	1250 for EG125; 1600 for EG160	2500	4000/6300	12,500	20,000

Dimensions and Weights

Approximate Dimensions in Inches (mm)

Series G—Frame EG, JG and LG

	EG			JG			LG		
	H	W	D	H	W	D	H	W	D
Single-pole	5.50 (139.7)	1.00 (25.4)	2.99 (76.0)	—	—	—	—	—	—
Two-pole	5.50 (139.7)	2.00 (50.8)	2.99 (76.0)	7.00 (177.8)	4.13 (105.0)	3.57 (87.4)	—	—	—
Three-pole	5.50 (139.7)	3.00 (76.2)	2.99 (76.0)	7.00 (177.8)	4.13 (105.0)	3.57 (87.4)	10.13 (258.0)	5.48 (140.0)	4.09 (104.0)
Four-pole	5.50 (139.7)	4.00 (101.6)	2.99 (76.0)	7.00 (177.8)	5.34 (135.6)	3.57 (87.4)	10.13 (258.0)	7.22 (183.0)	4.09 (104.0)

Series G—Frame NG and RG

	NG			RG		
	H	W	D	H	W	D
Single-pole	—	—	—	—	—	—
Two-pole	—	—	—	—	—	—
Three-pole	16.00 (406.0)	8.25 (210.0)	5.50 (140.0)	16.00 (406.0)	15.50 (394.0)	9.75 (229.0)
Four-pole	16.00 (406.0)	11.13 (280.0)	5.50 (140.0)	16.00 (406.0)	20.00 (508.0)	9.75 (229.0)

Approximate Shipping Weight in Lbs (kg)

Series G—Frame EG, JG and LG

	EG	JG	LG	NG	RG
Single-pole	0.85 (0.39)	—	—	—	—
Two-pole	1.57 (0.71)	11.3 (5.13)	—	—	—
Three-pole	2.28 (1.04)	5.06 (2.30) T/M 5.31 (2.41) ETU	12.36 (5.61) T/M 13.04 (5.92) ETU	46.8 (21.3)	103.0 (47.0)
Four-pole	2.85 (1.29)	6.76 (3.07) T/M 7.12 (3.23) ETU	16.27 (7.39) T/M 16.92 (7.68) ETU	62.0 (28.3)	118.4 (54.0)

EG-Frame (15–125 Amperes)

Contents

Description	*Page*
EG-Frame (15–125 Amperes)	
Catalog Number Selection	**V4-T2-16**
Product Selection	**V4-T2-17**
Accessories	**V4-T2-26**
Technical Data and Specifications	**V4-T2-27**
Dimensions and Weights	**V4-T2-27**
JG-Frame (63–250 Amperes)	**V4-T2-29**
LG-Frame (250–630 Amperes)	**V4-T2-47**
NG-Frame (320–1200 Amperes)	**V4-T2-65**
RG-Frame (800–2500 Amperes)	**V4-T2-74**
Motor Circuit Protectors (MCP)	**V4-T2-85**
Motor Protector Circuit Breakers (MPCB)	**V4-T2-89**
30 mA Ground Fault (Earth Leakage) Module	**V4-T2-92**
Current Limiting Circuit Breaker Module	**V4-T2-96**
High Instantaneous Circuit Breaker for Selective Coordination	**V4-T2-101**
Special Features and Accessories	**V4-T2-104**
Motor Operators	**V4-T2-112**
Plug-In Blocks	**V4-T2-114**
Drawout Cassette	**V4-T2-115**

EG-Frame (15–125 Amperes)

Product Description

EG breaker is HACR rated.

Catalog Number Selection

This information is presented only as an aid to understanding catalog numbers. It is not to be used to build catalog numbers for circuit breakers or trip units.

Series G—EG-Frame (15–125 Amperes)

E G H 3 015 FF G

Frame
E

Standard/Application
G = IEC/CE/UL/CSA

Number of Poles
1 = One
2 = Two
3 = Three
4 = Four—neutral 0% protected
7 = Four—neutral 100% protected

Amperes
016 ①
015
020
025
030
032 ①
035
040
045
050
060
063 ①
070
080
090
100
110
125
160 ①

Terminations/Hardware	
Terminals	**Mounting Hardware**
M = Metric end caps	Metric
E = Imperial end caps	Imperial
G = Line/load standard	Metric
B = Bolt-on	—

Trip Unit
FF = Fixed fixed
AF = Adjustable thermal fixed magnetic
KS = Molded case switch

Performance				
	600Y/347	**480**	**415**	**240**
B	—	18	18	25
E	18	25	25	35
S	22	35	40	85
H	25	65	70	100
C	35	100	100	200
K	Molded case switch ②			

Notes

① Cannot be UL rated.

② Available only as 125 and 160 A sizes.

Product Selection

Complete Breaker (Includes Frame, Trip Unit, Standard Terminals and Mounting Hardware) IC Rating at 415/480 Volts

EG-Frame

EG-Frame—18/18

Maximum Continuous Amps at 40 °C ①	Single-Pole Fixed Thermal, Fixed Magnetic Catalog Number	Two-Pole Fixed Thermal, Fixed Magnetic Catalog Number	Three-Pole Fixed Thermal, Fixed Magnetic Catalog Number	Three-Pole Adjustable ② Thermal, Fixed Magnetic Catalog Number	Four-Pole ③ Fixed Thermal, Fixed Magnetic Catalog Number	Four-Pole ③ Adjustable ② Thermal, Fixed Magnetic Catalog Number
15	EGB1015FFG	EGB2015FFG	EGB3015FFG	—	EGB4015FFG	—
16	EGB1016FFG	EGB2016FFG	EGB3016FFG	—	EGB4016FFG	—
20	EGB1020FFG	EGB2020FFG	EGB3020FFG	—	EGB4020FFG	EGB4020AFG
25	EGB1025FFG	EGB2025FFG	EGB3025FFG	EGB3025AFG	EGB4025FFG	EGB4025AFG
30	EGB1030FFG	EGB2030FFG	EGB3030FFG	—	EGB4030FFG	—
32	EGB1032FFG	EGB2032FFG	EGB3032FFG	EGB3032AFG	EGB4032FFG	EGB4032AFG
35	EGB1035FFG	EGB2035FFG	EGB3035FFG	—	EGB4035FFG	—
40	EGB1040FFG	EGB2040FFG	EGB3040FFG	EGB3040AFG	EGB4040FFG	EGB4040AFG
45	EGB1045FFG	EGB2045FFG	EGB3045FFG	—	EGB4045FFG	—
50	EGB1050FFG	EGB2050FFG	EGB3050FFG	EGB3050AFG	EGB4050FFG	EGB4050AFG
60	EGB1060FFG	EGB2060FFG	EGB3060FFG	—	EGB4060FFG	—
63	EGB1063FFG	EGB2063FFG	EGB3063FFG	EGB3063AFG	EGB4063FFG	EGB4063AFG
70	EGB1070FFG	EGB2070FFG	EGB3070FFG	—	EGB4070FFG	—
80	EGB1080FFG	EGB2080FFG	EGB3080FFG	EGB3080AFG	EGB4080FFG	EGB4080AFG
90	EGB1090FFG	EGB2090FFG	EGB3090FFG	—	EGB4090FFG	—
100	EGB1100FFG	EGB2100FFG	EGB3100FFG	EGB3100AFG	EGB4100FFG	EGB4100AFG
110	EGB1110FFG	EGB2110FFG	EGB3110FFG	—	EGB4110FFG	—
125	EGB1125FFG	EGB2125FFG	EGB3125FFG	EGB3125AFG	EGB4125FFG	EGB4125AFG
160	—	—	EGB3160FFG	EGB3160AFG	EGB4160FFG	EGB4160AFG

Notes

① 16, 32, 63 and 160 A are not UL listed ratings.
② Adjustable thermal are not UL listed.
③ Change the fourth digit to 7 for 100% neutral protection. Neutral is on the LH side.

EG-Frame—25/25 Single-Pole Unavailable

EG-Frame

EG-Frame—25/25

Maximum Continuous Amps at 40 °C ①	Two-Pole Fixed Thermal, Fixed Magnetic Catalog Number	Three-Pole Fixed Thermal, Fixed Magnetic Catalog Number	Three-Pole Adjustable ② Thermal, Fixed Magnetic Catalog Number	Four-Pole ③ Fixed Thermal, Fixed Magnetic Catalog Number	Four-Pole ③ Adjustable ② Thermal, Fixed Magnetic Catalog Number
15	EGE2015FFG	EGE3015FFG	—	EGE4015FFG	—
16	EGE2016FFG	EGE3016FFG	—	EGE4016FFG	—
20	EGE2020FFG	EGE3020FFG	—	EGE4020FFG	EGE4020AFG
25	EGE2025FFG	EGE3025FFG	EGE3025AFG	EGE4025FFG	EGE4025AFG
30	EGE2030FFG	EGE3030FFG	—	EGE4030FFG	—
32	EGE2032FFG	EGE3032FFG	EGE3032AFG	EGE4032FFG	EGE4032AFG
35	EGE2035FFG	EGE3035FFG	—	EGE4035FFG	—
40	EGE2040FFG	EGE3040FFG	EGE3040AFG	EGE4040FFG	EGE4040AFG
45	EGE2045FFG	EGE3045FFG	EGE3050AFG	EGE4045FFG	—
50	EGE2050FFG	EGE3050FFG	—	EGE4050FFG	EGE4050AFG
60	EGE2060FFG	EGE3060FFG	—	EGE4060FFG	—
63	EGE2063FFG	EGE3063FFG	EGE3063AFG	EGE4063FFG	EGE4063AFG
70	EGE2070FFG	EGE3070FFG	—	EGE4070FFG	—
80	EGE2080FFG	EGE3080FFG	EGE3080AFG	EGE4080FFG	EGE4080AFG
90	EGE2090FFG	EGE3090FFG	—	EGE4090FFG	—
100	EGE2100FFG	EGE3100FFG	EGE3100AFG	EGE4100FFG	EGE4100AFG
125	EGE2125FFG	EGE3125FFG	EGE3125AFG	EGE4125FFG	EGE4125AFG
160	—	EGE3160FFG	EGE3160AFG	EGE4160FFG	EGE4160AFG

Notes

① 16, 32, 63 and 160 A are not UL listed ratings.
② Adjustable thermal are not UL listed.
③ Change the fourth digit to 7 for 100% neutral protection. Neutral is on the LH side.

EG-Frame

EG-Frame—40/35

Maximum Continuous Amps at 40 °C ①	Single-Pole Fixed Thermal, Fixed Magnetic Catalog Number	Two-Pole Fixed Thermal, Fixed Magnetic Catalog Number	Three-Pole Fixed Thermal, Fixed Magnetic Catalog Number	Adjustable ② Thermal, Fixed Magnetic Catalog Number	Four-Pole ③ Fixed Thermal, Fixed Magnetic Catalog Number	Adjustable ② Thermal, Fixed Magnetic Catalog Number
15	EGS1015FFG	EGS2015FFG	EGS3015FFG	—	EGS4015FFG	—
16	EGS1016FFG	EGS2016FFG	EGS3016FFG	—	EGS4016FFG	—
20	EGS1020FFG	EGS2020FFG	EGS3020FFG	—	EGS4020FFG	EGS4020AFG
25	EGS1025FFG	EGS2025FFG	EGS3025FFG	EGS3025AFG	EGS4025FFG	EGS4025AFG
30	EGS1030FFG	EGS2030FFG	EGS3030FFG	—	EGS4030FFG	—
32	EGS1032FFG	EGS2032FFG	EGS3032FFG	EGS3032AFG	EGS4032FFG	EGS4032AFG
35	EGS1035FFG	EGS2035FFG	EGS3035FFG	—	EGS4035FFG	—
40	EGS1040FFG	EGS2040FFG	EGS3040FFG	EGS3040AFG	EGS4040FFG	EGS4040AFG
45	EGS1045FFG	EGS2045FFG	EGS3045FFG	—	EGS4045FFG	—
50	EGS1050FFG	EGS2050FFG	EGS3050FFG	EGS3050AFG	EGS4050FFG	EGS4050AFG
60	EGS1060FFG	EGS2060FFG	EGS3060FFG	—	EGS4060FFG	—
63	EGS1063FFG	EGS2063FFG	EGS3063FFG	EGS3063AFG	EGS4063FFG	EGS4063AFG
70	EGS1070FFG	EGS2070FFG	EGS3070FFG	—	EGS4070FFG	—
80	EGS1080FFG	EGS2080FFG	EGS3080FFG	EGS3080AFG	EGS4080FFG	EGS4080AFG
90	EGS1090FFG	EGS2090FFG	EGS3090FFG	—	EGS4090FFG	—
100	EGS1100FFG	EGS2100FFG	EGS3100FFG	EGS3100AFG	EGS4100FFG	EGS4100AFG
125	EGS1125FFG	EGS2125FFG	EGS3125FFG	EGS3125AFG	EGS4125FFG	EGS4125AFG
160	—	—	EGS3160FFG	EGS3160AFG	EGS4160FFG	EGS4160AFG

Notes

① 16, 32, 63 and 160 A are not UL listed ratings.
② Adjustable thermal are not UL listed.
③ Change the fourth digit to 7 for 100% neutral protection. Neutral is on the LH side.

EG-Frame

EG-Frame—70/65

Maximum Continuous Amps at 40 °C ①	Single-Pole Fixed Thermal, Fixed Magnetic Catalog Number	Two-Pole Fixed Thermal, Fixed Magnetic Catalog Number	Three-Pole Fixed Thermal, Fixed Magnetic Catalog Number	Three-Pole Adjustable ② Thermal, Fixed Magnetic Catalog Number	Four-Pole ③ Fixed Thermal, Fixed Magnetic Catalog Number	Four-Pole ③ Adjustable ② Thermal, Fixed Magnetic Catalog Number
15	EGH1015FFG	EGH2015FFG	EGH3015FFG	—	EGH4015FFG	—
16	EGH1016FFG	EGH2016FFG	EGH3016FFG	—	EGH4016FFG	—
20	EGH1020FFG	EGH2020FFG	EGH3020FFG	EGH3020AFG	EGH4020FFG	EGH4020AFG
25	EGH1025FFG	EGH2025FFG	EGH3025FFG	EGH3025AFG	EGH4025FFG	EGH4025AFG
30	EGH1030FFG	EGH2030FFG	EGH3030FFG	—	EGH4030FFG	—
32	EGH1032FFG	EGH2032FFG	EGH3032FFG	EGH3032AFG	EGH4032FFG	EGH4032AFG
35	EGH1035FFG	EGH2035FFG	EGH3035FFG	—	EGH4035FFG	—
40	EGH1040FFG	EGH2040FFG	EGH3040FFG	EGH3040AFG	EGH4040FFG	EGH4040AFG
45	EGH1045FFG	EGH2045FFG	EGH3045FFG	—	EGH4045FFG	EGH4050AFG
50	EGH1050FFG	EGH2050FFG	EGH3050FFG	EGH3050AFG	EGH4050FFG	—
60	EGH1060FFG	EGH2060FFG	EGH3060FFG	—	EGH4060FFG	—
63	EGH1063FFG	EGH2063FFG	EGH3063FFG	EGH3063AFG	EGH4063FFG	EGH4063AFG
70	EGH1070FFG	EGH2070FFG	EGH3070FFG	—	EGH4070FFG	—
80	EGH1080FFG	EGH2080FFG	EGH3080FFG	EGH3080AFG	EGH4080FFG	EGH4080AFG
90	EGH1090FFG	EGH2090FFG	EGH3090FFG	—	EGH4090FFG	—
100	EGH1100FFG	EGH2100FFG	EGH3100FFG	EGH3100AFG	EGH4100FFG	EGH4100AFG
125	EGH1125FFG	EGH2125FFG	EGH3125FFG	EGH3125AFG	EGH4125FFG	EGH4125AFG

Notes

① 16, 32, 63A are not UL listed ratings.
② Adjustable thermal are not UL listed.
③ Change the fourth digit to 7 for 100% neutral protection. Neutral is on the LH side.

EG-Frame—100/100 Current Limiting (Single-Pole and Two-Pole Unavailable)

EG-Frame

EG-Frame—100/100

	Three-Pole		Four-Pole 0% Protected Neutral ③	
	Fixed Thermal, Fixed Magnetic	Adjustable ② Thermal, Fixed Magnetic	Fixed Thermal, Fixed Magnetic	Adjustable ② Thermal, Fixed Magnetic
Maximum Continuous Amps at 40 °C ①	Catalog Number	Catalog Number	Catalog Number	Catalog Number
15	EGC3015FFG	—	EGC7015FFG	—
16	EGC3016FFG	—	EGC7016FFG	—
20	EGC3020FFG	EGC3020AFG	EGC7020FFG	EGC7020AFG
25	EGC3025FFG	EGC3025AFG	EGC7025FFG	EGC7025AFG
30	EGC3030FFG	—	EGC7030FFG	—
32	EGC3032FFG	EGC3032AFG	EGC7032FFG	EGC7032AFG
35	EGC3035FFG	—	EGC7035FFG	—
40	EGC3040FFG	EGC3040AFG	EGC7040FFG	EGC7040AFG
45	EGC3045FFG	—	EGC7045FFG	—
50	EGC3050FFG	EGC3050AFG	EGC7050FFG	EGC7050AFG
60	EGC3060FFG	—	EGC7060FFG	—
63	EGC3063FFG	EGC3063AFG	EGC7063FFG	EGC7063AFG
70	EGC3070FFG	—	EGC7070FFG	—
80	EGC3080FFG	EGC3080AFG	EGC7080FFG	EGC7080AFG
90	EGC3090FFG	—	EGC7090FFG	—
100	EGC3100FFG	EGC3100AFG	EGC7100FFG	EGC7100AFG
125	EGC3125FFG	EGC3125AFG	EGC7125FFG	EGC7125AFG

Molded Case Switches ④

Catalog Number
EGK3125KSG
EGK7125KSG
EGK3160KSG
EGK7160KSG

Notes

① 16, 32, 63A are not UL listed ratings.
② Adjustable thermal is not UL listed.
③ Change the fourth digit to 7 for 100% neutral protection. Neutral is on LH side.
④ Molded case switches may open above 1250 A.

EG Bolt-On Complete Breaker (Includes Frame, Trip Unit and Mounting Hardware)

EG-Frame

EG-Frame—18 kAIC at 480 Vac

Maximum Continuous Amps at 40 °C	Single-Pole Fixed Thermal, Fixed Magnetic Catalog Number ①	Two-Pole Fixed Thermal, Fixed Magnetic Catalog Number ②	Three-Pole Fixed Thermal, Fixed Magnetic Catalog Number ③
15	EGB1015FFB	EGB2015FFB	EGB3015FFB
20	EGB1020FFB	EGB2020FFB	EGB3020FFB
25	EGB1025FFB	EGB2025FFB	EGB3025FFB
30	EGB1030FFB	EGB2030FFB	EGB3030FFB
35	EGB1035FFB	EGB2035FFB	EGB3035FFB
40	EGB1040FFB	EGB2040FFB	EGB3040FFB
45	EGB1045FFB	EGB2045FFB	EGB3045FFB
50	EGB1050FFB	EGB2050FFB	EGB3050FFB
60	EGB1060FFB	EGB2060FFB	EGB3060FFB
70	EGB1070FFB	EGB2070FFB	EGB3070FFB
80	EGB1080FFB	EGB2080FFB	EGB3080FFB
90	EGB1090FFB	EGB2090FFB	EGB3090FFB
100	EGB1100FFB	EGB2100FFB	EGB3100FFB
110	EGB1110FFB	EGB2110FFB	EGB3110FFB
125	EGB1125FFB	EGB2125FFB	EGB3125FFB

EG-Frame

EG-Frame—35 kAIC at 480 Vac

Maximum Continuous Amps at 40 °C	Single-Pole Fixed Thermal, Fixed Magnetic Catalog Number ①	Two-Pole Fixed Thermal, Fixed Magnetic Catalog Number ②	Three-Pole Fixed Thermal, Fixed Magnetic Catalog Number ③
15	EGS1015FFB	EGS2015FFB	EGS3015FFB
20	EGS1020FFB	EGS2020FFB	EGS3020FFB
25	EGS1025FFB	EGS2025FFB	EGS3025FFB
30	EGS1030FFB	EGS2030FFB	EGS3030FFB
35	EGS1035FFB	EGS2035FFB	EGS3035FFB
40	EGS1040FFB	EGS2040FFB	EGS3040FFB
45	EGS1045FFB	EGS2045FFB	EGS3045FFB
50	EGS1050FFB	EGS2050FFB	EGS3050FFB
60	EGS1060FFB	EGS2060FFB	EGS3060FFB
70	EGS1070FFB	EGS2070FFB	EGS3070FFB
80	EGS1080FFB	EGS2080FFB	EGS3080FFB
90	EGS1090FFB	EGS2090FFB	EGS3090FFB
100	EGS1100FFB	EGS2100FFB	EGS3100FFB
110	EGS1110FFB	EGS2110FFB	EGS3110FFB
125	EGS1125FFB	EGS2125FFB	EGS3125FFB

Notes

① For bulk pack 24, add suffix BP24 and order quantities of 24.
② For bulk pack 12, add suffix BP12 and order quantities of 12.
③ For bulk pack 8, add suffix BP8 and order quantities of 8.

EG-Frame

EG-Frame—65 kAIC at 480 Vac

Maximum Continuous Amps at 40 °C	Single-Pole Fixed Thermal, Fixed Magnetic Catalog Number ①	Two-Pole Fixed Thermal, Fixed Magnetic Catalog Number ②	Three-Pole Fixed Thermal, Fixed Magnetic Catalog Number ③
15	**EGH1015FFB**	**EGH2015FFB**	**EGH3015FFB**
20	**EGH1020FFB**	**EGH2020FFB**	**EGH3020FFB**
25	**EGH1025FFB**	**EGH2025FFB**	**EGH3025FFB**
30	**EGH1030FFB**	**EGH2030FFB**	**EGH3030FFB**
35	**EGH1035FFB**	**EGH2035FFB**	**EGH3035FFB**
40	**EGH1040FFB**	**EGH2040FFB**	**EGH3040FFB**
45	**EGH1045FFB**	**EGH2045FFB**	**EGH3045FFB**
50	**EGH1050FFB**	**EGH2050FFB**	**EGH3050FFB**
60	**EGH1060FFB**	**EGH2060FFB**	**EGH3060FFB**
70	**EGH1070FFB**	**EGH2070FFB**	**EGH3070FFB**
80	**EGH1080FFB**	**EGH2080FFB**	**EGH3080FFB**
90	**EGH1090FFB**	**EGH2090FFB**	**EGH3090FFB**
100	**EGH1100FFB**	**EGH2100FFB**	**EGH3100FFB**
110	**EGH1110FFB**	**EGH2110FFB**	**EGH3110FFB**
125	**EGH1125FFB**	**EGH2125FFB**	**EGH3125FFB**

Load Terminals

Maximum Breaker Amps	Terminal, Body Material	Wire Type	Metric Wire Range mm^2	AWG Wire Range	(Package of Three Terminals) Catalog Number
Standard Cu/Al Pressure Type Terminals					
15–50	Aluminum	Cu/Al	2.5–50	#14–1/0	**3TA125EF**
60–125	Aluminum	Cu/Al	16–70	#6–3/0	**3TA150EF**

Notes

① For bulk pack 24, add suffix BP24 and order quantities of 24.
② For bulk pack 12, add suffix BP12 and order quantities of 12.
③ For bulk pack 8, add suffix BP8 and order quantities of 8.

Accessories Selection Guide and Ordering Information

EG-Frame

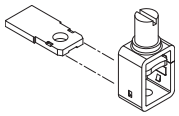
3T125EF

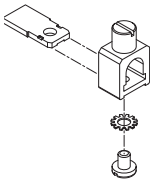
3TA125EF

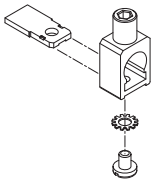
3TA150EF

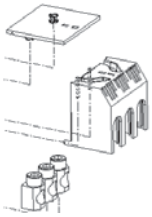
3TA160EFK

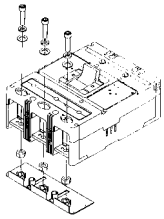
EF2RTWK, Two-Pole–Metric
EF3RTWK, Three-Pole–Metric
EF4RTWK, Four-Pole–Metric
EF2RTDK, Two-Pole–Imperial
EF3RTDK, Three-Pole–Imperial
EF4RTDK, Four-Pole–Imperial

Control Wire Terminal Kit GCWTK

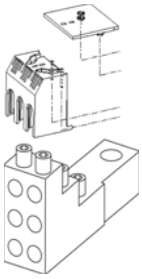
Multiwire Connectors

Line and Load Terminals

Maximum Breaker Amps	Terminal Body Material	Wire Type	Metric Wire Range mm^2	AWG Wire Range	(Package of Three Terminals) Catalog Number
Standard Cu/Al Pressure Type Terminals					
125	Steel	Al	4–6	#12-10	**3T125EF** ①
125	Steel	Cu	2.5–95	#14-3/0	**3T125EF** ①
125	Aluminum	Cu/Al	2.5–50	#14-1/0	**3TA125EF**
160	Aluminum	Cu/Al	16–70	#6-3/0	**3TA150EF**
160	Aluminum	Cu/Al	35–120	#3-250	**3TA160EFK**
160	Aluminum	Cu/Al	35–120	#3-250	**4TA160EFK** ②

EG-Frame circuit breakers and molded case switches have line and load terminals as standard equipment.

Insert collar enclosing conductor as shown. Locate nut on top of conductor and tighten securely with screw and washer.

Caution: Collar must surround conductor.

Insert collar enclosing conductor and center on extrusion. Tighten securely with screw and washer. Endcap kits are used on the E-Frame breaker line side to connect busbar or similar electrical connections. Includes hardware.

Notes

① Standard line and load terminals.
② Four-pole kit with four terminals.

Control Wire Terminal Kit

	Catalog Number
Control wire terminal kit	**5652B38G01**
Package of 12—priced individually	

For use with steel or stainless steel standard line and load terminals only.

Interphase Barriers

	Catalog Number
Interphase barriers	**EIPBK**
Package of 12—priced individually	

The interphase barrier is available for extended insulation between circuit breaker poles. Specify quantity when ordering.

Base Mounting Hardware—DIN Rail Mounting

	Catalog Number
DIN rail adapter—single-pole	**EF1DIN**
DIN rail adapter—two-pole	**EGDIN**
DIN rail adapter—three- or four-pole	**EF34DIN**
Metal DIN rail adapter—three-pole	**EGGDDIN**

Metric base mounting hardware is included with a circuit breaker or molded case switch. (Included with breaker.) If required separately, order S/N 8703C80G08.

Note: English mounting hardware kit can be supplied separate. Catalog number is **BMHE** #6–32 x 3 inches for two-, three- and four-pole. Single-pole mounting hardware metric order **8703C80G11**. English hardware **8703C80G12**. Both sold in quantities of 100.

Terminal Shields

The terminal shield is available for line terminal areas in three- and four-pole circuit breakers. Special terminal shields are also available for use when an electrical (solenoid) operator is mounted on the circuit breaker. The standard style number by pole for each terminal shield is for a package of 10 and is priced per each package. Special terminal shields are packaged individually.

Terminal Shields—IP30 Protection

Number of Poles	Catalog Number
3	**EFTS3K**
4	**EFTS4K**

Terminal End Covers (Gas Barrier)

The terminal end cover is available for three-pole circuit breakers only. Two conductor opening sizes are available. Specify quantity (one per circuit breaker) when ordering.

Terminal End Covers

Conductor Opening Diameter Inches (mm)	Catalog Number
6.35 (0.25)	**EEC3K**
10.41 (0.41)	**EEC4K**

Multiwire Connectors

Field-installed multiwire connectors for the load side (OFF) end terminals. They are used to distribute the load from the circuit breaker to multiple devices without the use of separate distribution terminal blocks.

Multiwire lug kits include mounting hardware, terminal shield insulators and tin-plated aluminum connectors to replace three mechanical load lugs. UL listed as used on the load side (OFF) end.

EG-Frame Multiwire Connectors Ordering Information (Package of 3) ①

Maximum Amperes	Wires per Terminal	Wire Size Range AWG Cu	Kit Catalog Number
125	3	14–2	**3TA125E3K**
125	6	14–6	**3TA125E6K**

Note

① For four-pole kit, change "3" at beginning of catalog number to "4."

Accessories

Allowable Accessory Combinations

Different combinations of accessories can be supplied, depending on the types of accessories and the number of poles in the circuit breaker.

EG-Frame Accessories

Description	Reference Page	Single-Pole	Two-Pole		Three-Pole			Four-Pole			
		Center	Left	Right	Left	Center	Right	Left	Center	Right	Neutral
Internal Accessories (Only one internal accessory per pole)											
Alarm lockout (Make/Break)	**V4-T2-109**	—	—	■	—	—	■	—	—	■	—
Alarm lockout (2Make/2Break)	**V4-T2-109**	—	—	■	—	—	■	—	—	■	—
Auxiliary switch (1A, 1B)	**V4-T2-109**	—	—	■	—	—	■	—	—	■	—
Auxiliary switch (2A, 2B)	**V4-T2-109**	—	—	■	—	—	■	—	—	■	—
Auxiliary switch and alarm switch combination	**V4-T2-109**	—	—	■	—	—	■	—	—	■	—
Shunt trip—standard	**V4-T2-109**	—	—	—	■	—	—	■	—	—	—
Undervoltage release mechanism	**V4-T2-110**	—	—	—	■	—	—	■	—	—	—
External Accessories											
End cap kit	**V4-T2-25**	—	●	●	●	●	●	●	●	●	●
Control wire terminal kit	**V4-T2-25**	●	●	●	●	●	●	●	●	●	●
Multiwire connectors	**V4-T2-25**	●	●	●	●	●	●	●	●	●	●
Base mounting hardware	**V4-T2-25**	●	●	●	●	●	●	●	●	●	●
Terminal shields	**V4-T2-25**	●	●	●	●	●	●	●	●	●	●
Terminal end covers	**V4-T2-25**	—	—	—	●	●	●	—	—	—	—
Interphase barriers	**V4-T2-25**	—	●	●	●	●	●	●	●	●	●
Non-padlockable handle block	**V4-T2-107**	■	■	—	—	■	—	—	■	—	—
Snap-on padlockable handle lock hasp	**V4-T2-107**	■	■	—	—	■	—	—	■	—	—
Padlockable handle lock hasp	**V4-T2-107**	—	—	■	❑	—	❑	❑	—	❑	—
Walking beam interlock—requires two breakers	**V4-T2-107**	—	—	—	●	●	●	●	●	●	●
Plug-in adapters	**V4-T2-107**	—	●	●	●	●	●	●	●	●	●
Electrical operator	**V4-T2-107**	—	—	—	●	●	●	—	—	—	—
Handle mechanisms	**V4-T2-420**	—	—	—	●	●	●	—	—	—	—
Modifications (Refer to Eaton)											
Moisture fungus treatment	**V4-T2-105**	●	●	●	●	●	●	●	●	●	●
Freeze-tested circuit breakers	—	●	●	●	●	●	●	●	●	●	●
Marine/naval application, UL 489 Supplement SA and SB	—	●	●	●	●	●	●	●	●	●	●

Legend

■ Applicable in indicated pole position
❑ May be mounted on left or right pole—not both
● Accessory available/modification available

Technical Data and Specifications

UL 489/IEC 60947-2 Interrupting Capacity (Symmetrical Amperes) (kA) Ratings

Circuit Breaker Type	Number of Poles	Volts AC (50/60 Hz) 120	220–240 I_{cu}	220–240 I_{cs}	277	347	380–415 I_{cu}	380–415 I_{cs}	480	600Y/ 347	690 ② I_{cu}	690 ② I_{cs}	Volts DC ① 125 I_{cu}	125 I_{cs}	250 ③④ I_{cu}	250 ③④ I_{cs}
EGB125	1	35	25	25	18	—	—	—	—	—	—	—	10	10	—	—
	2, 3, 4	—	25	25	—	—	18	18	18	—	—	—	—	—	10	10
EGE125	2, 3, 4	—	35	35	—	—	25	25	25	18	—	—	—	—	10	10
EGS125	1	100	85	43	35	22	—	—	—	—	—	—	35	35	—	—
	2, 3, 4	—	85	43	—	—	40	30	35	22	—	—	—	—	35	35
EGH125	1	200	100	50	65	25	—	—	—	—	—	—	42	42	—	—
	2, 3, 4	—	100	50	—	—	70	35	65	25	—	—	—	—	42	42
EGC125 ⑤	3, 4	—	200	200	—	—	100	100	100	35	—	—	—	—	42	42
EGB160 ②	3, 4	—	25	25	—	—	18	18	18	—	—	—	—	—	10	10
EGE160 ②	3, 4	—	35	35	—	—	25	25	25	18	—	—	—	—	10	10
EGS160 ②	3, 4	—	85	43	—	—	40	30	35	22	—	—	—	—	35	35

UL 489 Current Limiting Data

Frame	Circuit	Ip (kA)	I^2T (10^6A^2S)
EGC	240 V/200 kA	24.5	0.6310
EGC	480 V/100 kA	24.5	0.6310
EGC	600 Y/35 kA	20.0	1.392

Dimensions and Weights

Approximate Dimensions in Inches (mm)

EG-Frame

Number of Poles	Width	Height	Depth
1	1.00 (25.4)	5.50 (139.7)	2.99 (75.9)
2	2.00 (50.8)	5.50 (139.7)	2.99 (75.9)
3	3.00 (76.2)	5.50 (139.7)	2.99 (75.9)
4	4.00 (101.6)	5.50 (139.7)	2.99 (75.9)

EG-Frame

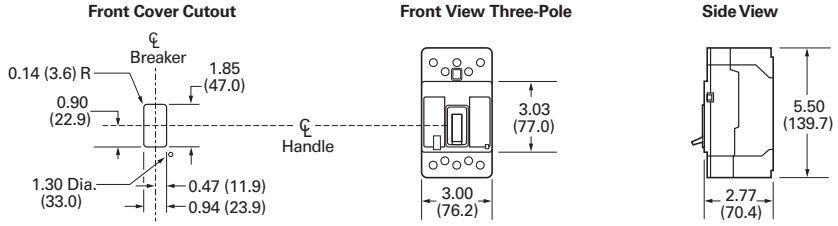

Approximate Shipping Weight in Lbs (kg)

EG-Frame

EG Breaker Type	Number of Poles 1	2	3	4
EGB125	1.5 (0.68)	2.0 (0.91)	3.0 (1.36)	4.9 (1.82)

Notes

① DC ratings apply to substantially non-inductive circuits.
② IEC only.
③ Two-pole circuit breaker, or two poles of three-pole circuit breaker.
④ Time constant is 3 milliseconds minimum at 10 kA and 8 milliseconds minimum at 42 kA.
⑤ Current limiting per UL 489.

EG-Frame With Earth Leakage Module

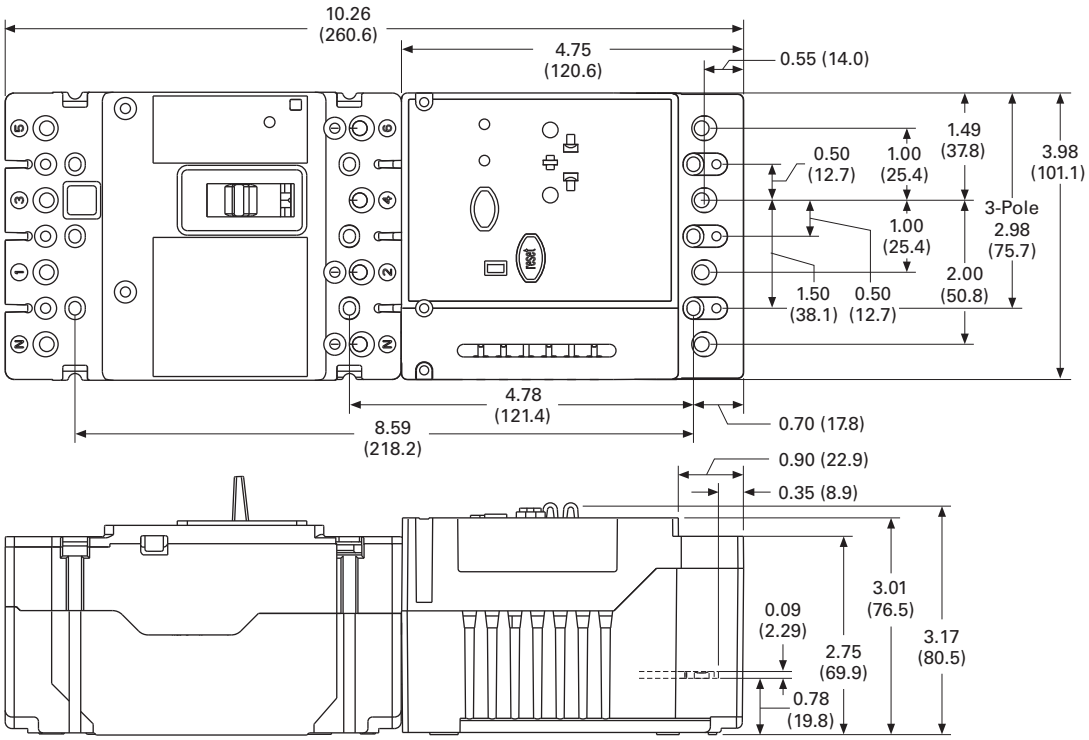

EG-Frame With Current Limiter Module

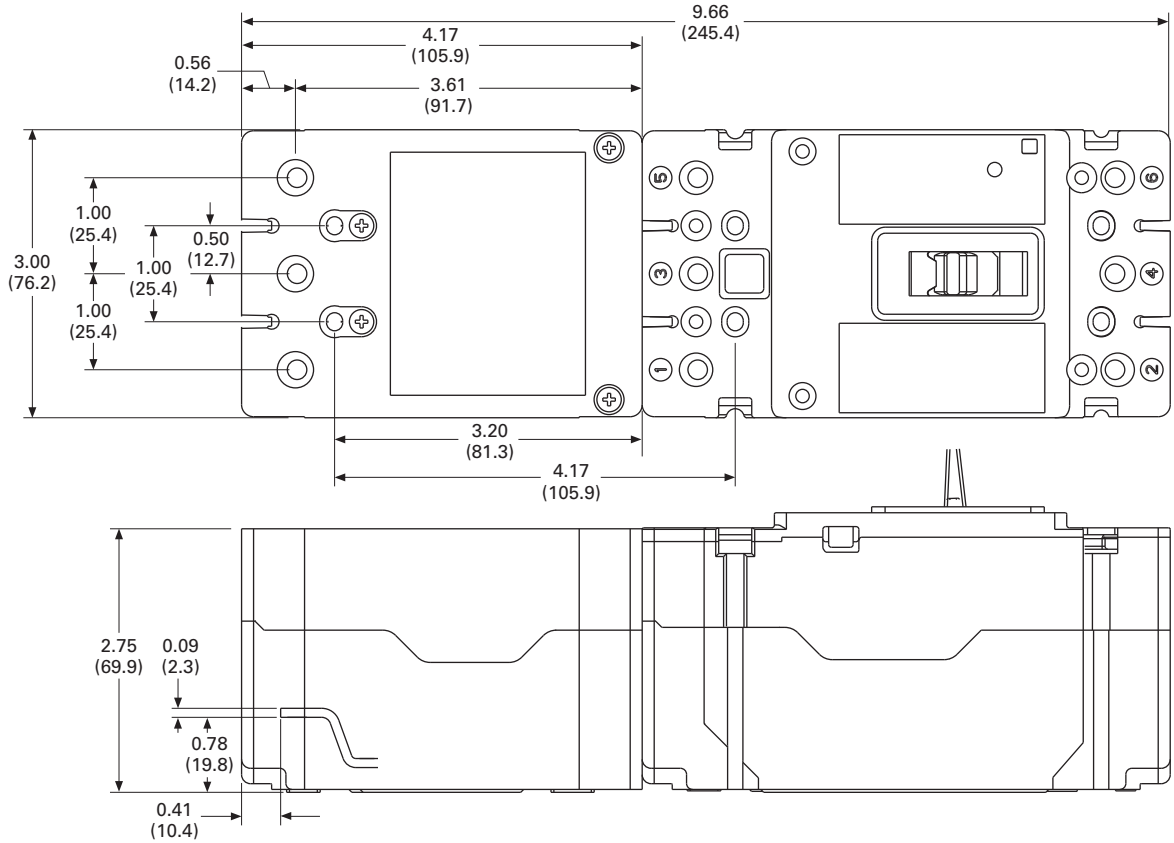

JG-Frame (63–250 Amperes)

Contents

Description	*Page*
EG-Frame (15–125 Amperes)	**V4-T2-15**
JG-Frame (63–250 Amperes)	
Catalog Number Selection	**V4-T2-30**
Product Selection	**V4-T2-31**
Accessories	**V4-T2-42**
Technical Data and Specifications	**V4-T2-43**
Dimensions and Weights	**V4-T2-45**
LG-Frame (250–630 Amperes)	**V4-T2-47**
NG-Frame (320–1200 Amperes)	**V4-T2-65**
RG-Frame (800–2500 Amperes)	**V4-T2-74**
Motor Circuit Protectors (MCP)	**V4-T2-85**
Motor Protector Circuit Breakers (MPCB)	**V4-T2-89**
30 mA Ground Fault (Earth Leakage) Module	**V4-T2-92**
Current Limiting Circuit Breaker Module	**V4-T2-96**
High Instantaneous Circuit Breaker for Selective Coordination	**V4-T2-101**
Special Features and Accessories	**V4-T2-104**
Motor Operators	**V4-T2-112**
Plug-In Blocks	**V4-T2-114**
Drawout Cassette	**V4-T2-115**

JG-Frame (63–250 Amperes)

Product Description

JG breaker is HACR rated.

Catalog Number Selection

This information is presented only as an aid to understanding catalog numbers.
It is not to be used to build catalog numbers for circuit breakers or trip units.

Series G—JG-Frame (63–250 Amperes)

J G S 3 250 FA G C

Frame

J

Standard/Application

G = IEC/CE/UL/CSA

Performance

	600	480	415	240
E	18	25	25	65
S	18	35	40	85
H	25	65	70	100
C	35	100	100	200
U	50	150	150	200
X	50	200	200	200
K	Molded case switch			

Number of Poles

2 = Two
3 = Three
4 = Four—Neutral 0% Protected
9 = Four—Neutral 100% Protected

Amperes

050
070
080
090
100
125
150
160
175
200
225
250

Trip Unit

AA = Adj. adj.
FA = Fixed adj.
KS = Molded case switch
33 = 310+ electronic LS
32 = 310+ electronic LSI
35 = 310+ electronic LSG
36 = 310+ electronic LSIG
NN = Frame only (250 A only; no trip unit)

Terminations/Hardware

Terminals	Mounting Hardware
M = Metric end caps	Metric
E = Imperial end caps	Imperial
G = Line/load standard	Metric
W = Without terminals	

Rating

Blank = 80% rated
C = 100% rated
F01 = Freeze tested for –70ºF (–57ºC)
F02 = Freeze tested for –22ºF (–30ºC)

Trip Unit

JT 4 100 FA B20

Trip

JT

Number of Poles

2 = Two
3 = Three
4 = Four—Neutral 0% Protected
9 = Four—Neutral 100% Protected

Amperes

T/M	ETU
080	**050**
090	**100**
100	**160**
110	**250**
125	
150	
160	
175	
200	
225	
250	

Trip Unit

AA = Adj. adj.
FA = Fixed adj.
KS = Molded case switch
33 = 310+ electronic LS
32 = 310+ electronic LSI
35 = 310+ electronic LSG
36 = 310+ electronic LSIG

Features (ETU Only) ①②

Blank= No feature
B20 = High load alarm
B21 = Ground fault alarm, with trip
B22 = Ground fault alarm, no trip
ZG = Zone selective interlocking

Notes

① Bxx features cannot be combined with other Bxx features.
② B21 and B22 available with LSG and LSIG trip units.

Product Selection

Complete Breaker (Includes Frame, Trip Unit, Standard Terminals and Mounting Hardware)—IC Rating at 415/480 Volts

JG-Frame

JG-Frame—IEC/CE/UL/CSA—25/25

Maximum Continuous Amperes	Magnetic Range	Two-Pole Fixed Thermal, Adjustable Magnetic Catalog Number	Three-Pole Fixed Thermal, Adjustable Magnetic Catalog Number	Adjustable Thermal, Adjustable Magnetic ① Catalog Number	Four-Pole 0%② Fixed Thermal, Adjustable Magnetic Catalog Number	Adjustable Thermal, Adjustable Magnetic ① Catalog Number
70	350–700	**JGE2070FAG**	**JGE3070FAG**	—	**JGE4070FAG**	—
90	450–900	**JGE2090FAG**	**JGE3090FAG**	—	**JGE4090FAG**	—
100	500–1000	**JGE2100FAG**	**JGE3100FAG**	**JGE3100AAG**	**JGE4100FAG**	**JGE4100AAG**
125	625–1250	**JGE2125FAG**	**JGE3125FAG**	**JGE3125AAG**	**JGE4125FAG**	**JGE4125AAG**
150	750–1550	**JGE2150FAG**	**JGE3150FAG**	—	**JGE4150FAG**	—
160	800–1600	—	—	**JGE3160AAG**	—	**JGE4160AAG**
175	875–1750	**JGE2175FAG**	**JGE3175FAG**	—	**JGE4175FAG**	—
200	1000–2000	**JGE2200FAG**	**JGE3200FAG**	**JGE3200AAG**	**JGE4200FAG**	**JGE4200AAG**
225	1125–2250	**JGE2225FAG**	**JGE3225FAG**	—	**JGE4225FAG**	—
250	1250–2500	**JGE2250FAG**	**JGE3250FAG**	**JGE3250AAG**	**JGE4250FAG**	**JGE4250AAG**

JG-Frame

JG-Frame—IEC/CE/UL/CSA—40/35, Two-Pole

Maximum Continuous Amperes	Magnetic Range	Two-Pole Fixed Thermal, Adjustable Magnetic Catalog Number	Three-Pole Fixed Thermal, Adjustable Magnetic Catalog Number	Adjustable Thermal, Adjustable Magnetic ① Catalog Number	Four-Pole 0%② Fixed Thermal, Adjustable Magnetic Catalog Number	Adjustable Thermal, Adjustable Magnetic ① Catalog Number
70	350–700	**JGS2070FAG**	**JGS3070FAG**	—	**JGS4070FAG**	—
90	450–900	**JGS2090FAG**	**JGS3090FAG**	—	**JGS4090FAG**	—
100	500–1000	**JGS2100FAG**	**JGS3100FAG**	**JGS3100AAG**	**JGS4100FAG**	**JGS4100AAG**
125	625–1250	**JGS2125FAG**	**JGS3125FAG**	**JGS3125AAG**	**JGS4125FAG**	**JGS4125AAG**
150	750–1550	**JGS2150FAG**	**JGS3150FAG**	—	**JGS4150FAG**	—
160	800–1600	—	—	**JGS3160AAG**	—	**JGS4160AAG**
175	875–1750	**JGS2175FAG**	**JGS3175FAG**	—	**JGS4175FAG**	—
200	1000–2000	**JGS2200FAG**	**JGS3200FAG**	**JGS3200AAG**	**JGS4200FAG**	**JGS4200AAG**
225	1125–2250	**JGS2225FAG**	**JGS3225FAG**	—	**JGS4225FAG**	—
250	1250–2500	**JGS2250FAG**	**JGS3250FAG**	**JGS3250AAG**	**JGS4250FAG**	**JGS4250AAG**

Notes

① EC-EN 60947-2 only. Adjustment is 0.8 and 1.0.

② 9 for 0–100% neutral protection. Neutral is on LH side.

JG-Frame

JG-Frame—IEC/CE/UL/CSA—70/65

Maximum Continuous Amperes	Magnetic Range	Two-Pole Fixed Thermal, Adjustable Magnetic Catalog Number	Three-Pole Fixed Thermal, Adjustable Magnetic Catalog Number	Adjustable Thermal, Fixed Magnetic ① Catalog Number	Four-Pole 0%② Fixed Thermal, Adjustable Magnetic Catalog Number	Adjustable Thermal, Fixed Magnetic ① Catalog Number
70	350–700	**JGH2070FAG**	**JGH3070FAG**	—	**JGH4070FAG**	—
90	450–900	**JGH2090FAG**	**JGH3090FAG**	—	**JGH4090FAG**	—
100	500–1000	**JGH2100FAG**	**JGH3100FAG**	**JGH3100AAG**	**JGH4100FAG**	**JGH4100AAG**
125	625–1250	**JGH2125FAG**	**JGH3125FAG**	**JGH3125AAG**	**JGH4125FAG**	**JGH4125AAG**
150	750–1550	**JGH2150FAG**	**JGH3150FAG**	—	**JGH4150FAG**	—
160	800–1600	—	—	**JGH3160AAG**	—	**JGH4160AAG**
175	875–1750	**JGH2175FAG**	**JGH3175FAG**	—	**JGH4175FAG**	—
200	1000–2000	**JGH2200FAG**	**JGH3200FAG**	**JGH3200AAG**	**JGH4200FAG**	**JGH4200AAG**
225	1125–2250	**JGH2225FAG**	**JGH3225FAG**	—	**JGH4225FAG**	—
250	1250–2500	**JGH2250FAG**	**JGH3250FAG**	**JGH3250AAG**	**JGH4250FAG**	**JGH4250AAG**

Notes

① EC-EN 60947-2 only. Adjustment is 0.8 and 1.0.

② 9 for 0–100% neutral protection. Neutral is on LH side.

Two-Pole not available in IEC/CE/UL/CSA 100/100, 150/150

JG-Frame

JG-Frame—IEC/CE/UL/CSA—100/100, Current Limiting

Maximum Continuous Amperes	Magnetic Range	Three-Pole Fixed Thermal, Adjustable Magnetic Catalog Number	Three-Pole Adjustable Thermal, Adjustable Magnetic ① Catalog Number	Four-Pole 0% ② Fixed Thermal, Adjustable Magnetic Catalog Number	Four-Pole 0% ② Adjustable Thermal, Adjustable Magnetic ① Catalog Number
70	350–700	**JGC3070FAG**	—	**JGC4070FAG**	—
80	400–800	—	**JGC3080AAG**	—	**JGC4080AAG**
90	450–900	**JGC3090FAG**	—	**JGC4090FAG**	—
100	500–1000	**JGC3100FAG**	**JGC3100AAG**	**JGC4100FAG**	**JGC4100AAG**
125	625–1250	**JGC3125FAG**	**JGC3125AAG**	**JGC4125FAG**	**JGC4125AAG**
150	750–1550	**JGC3150FAG**	—	**JGC4150FAG**	—
160	800–1600	—	**JGC3160AAG**	—	**JGC4160AAG**
175	875–1750	**JGC3175FAG**	—	**JGC4175FAG**	—
200	1000–2000	**JGC3200FAG**	**JGC3200AAG**	**JGC4200FAG**	**JGC4200AAG**
225	1125–2250	**JGC3225FAG**	—	**JGC4225FAG**	—
250	1250–2500	**JGC3250FAG**	**JGC3250AAG**	**JGC4250FAG**	**JGC4250AAG**

JG-Frame

JG-Frame—IEC/CE/UL/CSA—150/150, Current Limiting

Maximum Continuous Amperes	Magnetic Range	Three-Pole Fixed Thermal, Adjustable Magnetic Catalog Number	Three-Pole Adjustable Thermal, Adjustable Magnetic ① Catalog Number	Four-Pole 0% ② Fixed Thermal, Adjustable Magnetic Catalog Number	Four-Pole 0% ② Adjustable Thermal, Adjustable Magnetic ① Catalog Number
70	350–700	**JGU3070FAG**	—	**JGU4070FAG**	—
80	400–800	—	**JGU3080AAG**	—	**JGU4080AAG**
90	450–900	**JGU3090FAG**	—	**JGU4090FAG**	—
100	500–1000	**JGU3100FAG**	**JGU3100AAG**	**JGU4100FAG**	**JGU4100AAG**
125	625–1250	**JGU3125FAG**	**JGU3125AAG**	**JGU4125FAG**	**JGU4125AAG**
150	750–1550	**JGU3150FAG**	—	**JGU4150FAG**	—
160	800–1600	—	**JGU3160AAG**	—	**JGU4160AAG**
175	875–1750	**JGU3175FAG**	—	**JGU4175FAG**	—
200	1000–2000	**JGU3200FAG**	**JGU3200AAG**	**JGU4200FAG**	**JGU4200AAG**
225	1125–2250	**JGU3225FAG**	—	**JGU4225FAG**	—
250	1250–2500	**JGU3250FAG**	**JGU3250AAG**	**JGU4250FAG**	**JGU4250AAG**

Notes

① EC-EN 60947-2 only. Adjustment is 0.8 and 1.0.

② 9 for 0–100% neutral protection. Neutral is on LH side.

Two-Pole not available in IEC/CE/UL/CSA 200/200

JG-Frame

JG-Frame—IEC/CE/UL/CSA 200/200, Current Limiting

Maximum Continuous Amperes	Magnetic Range	Three-Pole Fixed Thermal, Adjustable Magnetic Catalog Number	Three-Pole Adjustable Thermal, Adjustable Magnetic ① Catalog Number	Four-Pole ② Fixed Thermal, Adjustable Magnetic Catalog Number	Four-Pole ② Adjustable Thermal, Adjustable Magnetic ① Catalog Number
70	350–700	**JGX3070FAG**	—	**JGX4070FAG**	—
80	400–800	—	**JGX3080AAG**	—	**JGX4080AAG**
90	450–900	**JGX3090FAG**	—	**JGX4090FAG**	—
100	500–1000	**JGX3100FAG**	**JGX3100AAG**	**JGX4100FAG**	**JGX4100AAG**
125	625–1250	**JGX3125FAG**	**JGX3125AAG**	**JGX4125FAG**	**JGX4125AAG**
150	750–1550	**JGX3150FAG**	—	**JGX4150FAG**	—
160	800–1600	—	**JGX3160AAG**	—	**JGX4160AAG**
175	875–1750	**JGX3175FAG**	—	**JGX4175FAG**	—
200	1000–2000	**JGX3200FAG**	**JGX3200AAG**	**JGX4200FAG**	**JGX4200AAG**
225	1125–2250	**JGX3225FAG**	—	**JGX4225FAG**	—
250	1250–2500	**JGX3250FAG**	**JGX3250AAG**	**JGX4250FAG**	**JGX4250AAG**

Molded Case Switches ③

Catalog Number
JGK3250KSG
JGK7250KSG

Notes

① EC-EN 60947-2 only. Adjustment is 0.8 and 1.0.

② 9 for 0–100% neutral protection. Neutral is on LH side.

③ Molded case switches will trip above 2500 amperes.

Frame—IC Rating at 415/480 Volts

Maximum Amperes	Two-Pole Catalog Number	Three-Pole Catalog Number	Four-Pole 0% Catalog Number
25/25			
250	**JGE2250NN**	**JGE3250NN**	**JGE4250NN**
40/35			
250	**JGS2250NN**	**JGS3250NN**	**JGS4250NN**
70/65			
250	**JGH2250NN**	**JGH3250NN**	**JGH4250NN**
100/100 Current Limiting Per UL 489			
250	—	**JGC3250NN**	**JGC4250NN**
150/150 Current Limiting Per UL 489			
250	—	**JGU3250NN**	**JGU4250NN**
200/200 Current Limiting Per UL 489			
250	—	**JGX3250NN**	**JGX4250NN**
25/25 100% Rated Per UL 489 ②			
250	—	**JGE3250NNC**	—
40/35 100% Rated Per UL 489 ②			
250	—	**JGS3250NNC**	—
70/65 100% Rated Per UL 489 ②			
250	—	**JGH3250NNC**	—

Thermal-Magnetic Trip Unit

Ampere Rating	Range	Catalog Number			Range	Catalog Number	
70	350–700	**JT2070FA**	**JT3070FA**	—	—	**JT4070FA**	—
80	400–800	—	**JT3080FA**	**JT3080AA** ③	64–100	—	**JT4080AA** ③
90	450–900	**JT2090FA**	**JT3090FA**	—	—	**JT4090FA**	—
100	500–1000	**JT2100FA**	**JT3100FA**	**JT3100AA** ③	80–100	**JT4100FA**	**JT4100AA** ③
125	625–1250	**JT2125FA**	**JT3125FA**	**JT3125AA** ③	100–125	**JT4125FA**	**JT4125AA** ③
150	750–1550	**JT2150FA**	**JT3150FA**	—	—	**JT4150FA**	—
160	800–1600	—	—	**JT3160AA** ③	128–160	—	**JT4160AA** ③
175	875–1750	**JT2175FA**	**JT3175FA**	—	—	**JT4175FA**	—
200	1000–2000	**JT2200FA**	**JT3200FA**	**JT3200AA** ③	160–200	**JT4200FA**	**JT4200AA** ③
225	1125–2250	**JT2225FA**	**JT3225FA**	—	—	**JT4225FA**	—
250	1250–2500	**JT2250FA**	**JT3250FA**	**JT3250AA** ③	200–250	**JT4250FA**	**JT4250AA** ③

Notes

① Standard line and load terminals.
② Components—100% rated frame.
③ Adjustable thermal trip units are typically used in IEC markets and are not UL or CSA listed.

310+ Electronic Trip Units

See 310+ adjustability specifications on **Page V4-T2-44**.

JG 310+ Electronic Trip Units

Ampere Rating	LS Catalog Number	LSI Catalog Number	LSG Catalog Number	LSIG Catalog Number	Neutral CT for LSG and LSIG ① Catalog Number
Three-Pole					
50	**JT305033**	**JT305032**	**JT305035**	**JT305036**	**JGFCT050**
100	**JT310033**	**JT310032**	**JT310035**	**JT310036**	**JGFCT100**
160	**JT316033**	**JT316032**	**JT316035**	**JT316036**	**JGFCT160**
250	**JT325033**	**JT325032**	**JT325035**	**JT325036**	**JGFCT250**
Four-Pole ②③					
50	**JT405033**	**JT405032**	**JT405035**	**JT405036**	—
100	**JT410033**	**JT410032**	**JT410035**	**JT410036**	—
160	**JT416033**	**JT416032**	**JT416035**	**JT416036**	—
250	**JT425033**	**JT425032**	**JT425035**	**JT425036**	—

310+ Electronic Trip Unit Accessories

Description	Catalog Number
Electronic portable test kit	**MTST230V**
Trip unit tamper protection wire seal	**5108A03H01**
External neutral sensor (250 A)	**JGFCT250**
External neutral sensor (160 A)	**JGFCT160**
External neutral sensor (100 A)	**JGFCT100**
External neutral sensor (80 A)	**JGFCT050**
Breaker-mount cause-of-trip indication	**TRIP-LED**
Breaker-mount ammeter module	**DIGIVIEW**
Remote-mount ammeter module	**DIGIVIEWR06**

Notes

① For use on a three-pole breaker used in a four-wire system if ground fault protection for the neutral is required.

② Neutral protection 4 = 0%, 7 = 100% electronic trip unit neutral protection is not adjustable.

③ Four-pole breakers with LSG and LSIG trip units are only available with 0% neutral protection.

Complete Breaker with 310+ Electronic Trip Units

See 310+ adjustability specifications on **Page V4-T2-44**.

IEC/UL/CSA—25/25

Ampere Rating	LS Catalog Number	LSI Catalog Number	LSG Catalog Number	LSIG Catalog Number	Neutral CT for LSG and LSIG ① Catalog Number
Three-Pole					
50	JGE305033G	JGE305032G	JGE305035G	JGE305036G	JGFCT050
100	JGE310033G	JGE310032G	JGE310035G	JGE310036G	JGFCT100
160	JGE316033G	JGE316032G	JGE316035G	JGE316036G	JGFCT160
250	JGE325033G	JGE325032G	JGE325035G	JGE325036G	JGFCT250
Four-Pole ②					
50	JGE405033G	JGE405032G	JGE405035G	JGE405036G	—
100	JGE410033G	JGE410032G	JGE410035G	JGE410036G	—
160	JGE416033G	JGE416032G	JGE416035G	JGE416036G	—
250	JGE425033G	JGE425032G	JGE425035G	JGE425036G	—

IEC/UL/CSA—40/35

Ampere Rating	LS Catalog Number	LSI Catalog Number	LSG Catalog Number	LSIG Catalog Number	Neutral CT for LSG and LSIG ① Catalog Number
Three-Pole					
50	JGS305033G	JGS305032G	JGS305035G	JGS305036G	JGFCT050
100	JGS310033G	JGS310032G	JGS310035G	JGS310036G	JGFCT100
160	JGS316033G	JGS316032G	JGS316035G	JGS316036G	JGFCT160
250	JGS325033G	JGS325032G	JGS325035G	JGS325036G	JGFCT250
Four-Pole ②③					
50	JGS405033G	JGS405032G	JGS405035G	JGS405036G	—
100	JGS410033G	JGS410032G	JGS410035G	JGS410036G	—
160	JGS416033G	JGS416032G	JGS416035G	JGS416036G	—
250	JGS425033G	JGS425032G	JGS425035G	JGS425036G	—

IEC/UL/CSA—70/65

Ampere Rating	LS Catalog Number	LSI Catalog Number	LSG Catalog Number	LSIG Catalog Number	Neutral CT for LSG and LSIG ① Catalog Number
Three-Pole					
50	JGH305033G	JGH305032G	JGH305035G	JGH305036G	JGFCT050
100	JGH310033G	JGH310032G	JGH310035G	JGH310036G	JGFCT100
160	JGH316033G	JGH316032G	JGH316035G	JGH316036G	JGFCT160
250	JGH325033G	JGH325032G	JGH325035G	JGH325036G	JGFCT250
Four-Pole ②					
50	JGH405033G	JGH405032G	JGH405035G	JGH405036G	—
100	JGH410033G	JGH410032G	JGH410035G	JGH410036G	—
160	JGH416033G	JGH416032G	JGH416035G	JGH416036G	—
250	JGH425033G	JGH425032G	JGH425035G	JGH425036G	—

Notes

① Required for four-wire systems if neutral protection is required.
② Neutral protection 4 = 0%, 7 = 100% electronic trip unit neutral protection is not adjustable.
③ Four-pole breakers with LSG and LSIG trip units are only available with 0% neutral protection.

IEC/UL/CSA—100/100, Current Limiting Per UL 489

Ampere Rating	LS Catalog Number	LSI Catalog Number	LSG Catalog Number	LSIG Catalog Number	Neutral CT for LSG and LSIG ① Catalog Number
Three-Pole					
50	JGC305033G	JGC305032G	JGC305035G	JGC305036G	JGFCT050
100	JGC310033G	JGC310032G	JGC310035G	JGC310036G	JGFCT100
160	JGC316033G	JGC316032G	JGC316035G	JGC316036G	JGFCT160
250	JGC335033G	JGC325032G	JGC325035G	JGC325036G	JGFCT250
Four-Pole ②					
50	JGC405033G	JGC405032G	JGC405035G	JGC405036G	—
100	JGC410033G	JGC410032G	JGC410035G	JGC410036G	—
160	JGC416033G	JGC416032G	JGC416035G	JGC416036G	—
250	JGC435033G	JGC425032G	JGC425035G	JGC425036G	—

IEC/UL/CSA—150/150, Current Limiting Per UL 489

Ampere Rating	LS Catalog Number	LSI Catalog Number	LSG Catalog Number	LSIG Catalog Number	Neutral CT for LSG and LSIG ① Catalog Number
Three-Pole					
50	JGU305033G	JGU305032G	JGU305035G	JGU305036G	JGFCT050
100	JGU310033G	JGU310032G	JGU310035G	JGU310036G	JGFCT100
160	JGU316033G	JGU316032G	JGU316035G	JGU316036G	JGFCT160
250	JGU335033G	JGU325032G	JGU325035G	JGU325036G	JGFCT250
Four-Pole ②③					
50	JGU405033G	JGU405032G	JGU405035G	JGU405036G	—
100	JGU410033G	JGU410032G	JGU410035G	JGU410036G	—
160	JGU416033G	JGU416032G	JGU416035G	JGU416036G	—
250	JGU435033G	JGU425032G	JGU425035G	JGU425036G	—

IEC/UL/CSA—200/200, Current Limiting Per UL 489

Ampere Rating	LS Catalog Number	LSI Catalog Number	LSG Catalog Number	LSIG Catalog Number	Neutral CT for LSG and LSIG ① Catalog Number
Three-Pole					
50	JGX305033G	JGX305032G	JGX305035G	JGX305036G	JGFCT050
100	JGX310033G	JGX310032G	JGX310035G	JGX310036G	JGFCT100
160	JGX316033G	JGX316032G	JGX316035G	JGX316036G	JGFCT160
250	JGX325033G	JGX325032G	JGX325035G	JGX325036G	JGFCT250
Four-Pole ②					
50	JGX405033G	JGX405032G	JGX405035G	JGX405036G	—
100	JGX410033G	JGX410032G	JGX410035G	JGX410036G	—
160	JGX416033G	JGX416032G	JGX416035G	JGX416036G	—
250	JGX425033G	JGX425032G	JGX425035G	JGX425036G	—

Notes

① Required for four-wire systems if neutral protection is required.
② Neutral protection 4 = 0%, 7 = 100% electronic trip unit neutral protection is not adjustable.
③ Four-pole breakers with LSG and LSIG trip units are only available with 0% neutral protection.

JG 100% Rated Circuit Breaker—Thermal-Magnetic Trip Unit

Complete Breaker (Includes Frame, Trip Unit, Standard Terminals and Mounting Hardware)—IC Rating at 415/480 Volts

JG-Frame

JG-Frame—IEC/CE/UL/CSA—25/25

Maximum Continuous Amperes	Magnetic Range	Three-Pole Fixed Thermal, Adjustable Magnetic Catalog Number
70	350–700	**JGE3070FAGC**
90	450–900	**JGE3090FAGC**
100	500–1000	**JGE3100FAGC**
125	625–1250	**JGE3125FAGC**
150	750–1550	**JGE3150FAGC**
160	800–1600	—
175	875–1750	**JGE3175FAGC**
200	1000–2000	**JGE3200FAGC**
225	1125–2250	**JGE3225FAGC**
250	1250–2500	**JGE3250FAGC**

JG-Frame—IEC/CE/UL/CSA—70/65

Maximum Continuous Amperes	Magnetic Range	Three-Pole Fixed Thermal, Adjustable Magnetic Catalog Number
70	350–700	**JGH3070FAGC**
90	450–900	**JGH3090FAGC**
100	500–1000	**JGH3100FAGC**
125	625–1250	**JGH3125FAGC**
150	750–1550	**JGH3150FAGC**
160	800–1600	—
175	875–1750	**JGH3175FAGC**
200	1000–2000	**JGH3200FAGC**
225	1125–2250	**JGH3225FAGC**
250	1250–2500	**JGH3250FAGC**

JG-Frame—IEC/CE/UL/CSA—40/35

Maximum Continuous Amperes	Magnetic Range	Three-Pole Fixed Thermal, Adjustable Magnetic Catalog Number
70	350–700	**JGS3070FAGC**
90	450–900	**JGS3090FAGC**
100	500–1000	**JGS3100FAGC**
125	625–1250	**JGS3125FAGC**
150	750–1550	**JGS3150FAGC**
160	800–1600	—
175	875–1750	**JGS3175FAGC**
200	1000–2000	**JGS3200FAGC**
225	1125–2250	**JGS3225FAGC**
250	1250–2500	**JGS3250FAGC**

JG 100% Rated 310+ Electronic Trip Unit Circuit Breaker

See 310+ adjustability specifications on **Page V4-T2-44**.

IEC/UL/CSA—25/25

Ampere Rating	LS Catalog Number	LSI Catalog Number	LSG Catalog Number	LSIG Catalog Number	Neutral CT for LSG and LSIG ① Catalog Number
50	**JGE305033GC**	**JGE305032GC**	**JGE305035GC**	**JGE305036GC**	**JGFCT050**
100	**JGE310033GC**	**JGE310032GC**	**JGE310035GC**	**JGE310036GC**	**JGFCT100**
160	**JGE316033GC**	**JGE316032GC**	**JGE316035GC**	**JGE316036GC**	**JGFCT160**
250	**JGE325033GC**	**JGE325032GC**	**JGE325035GC**	**JGE325036GC**	**JGFCT250**

IEC/UL/CSA—40/35

Ampere Rating	LS Catalog Number	LSI Catalog Number	LSG Catalog Number	LSIG Catalog Number	Neutral CT for LSG and LSIG ① Catalog Number
50	**JGS305033GC**	**JGS305032GC**	**JGS305035GC**	**JGS305036GC**	**JGFCT050**
100	**JGS310033GC**	**JGS310032GC**	**JGS310035GC**	**JGS310036GC**	**JGFCT100**
160	**JGS316033GC**	**JGS316032GC**	**JGS316035GC**	**JGS316036GC**	**JGFCT160**
250	**JGS325033GC**	**JGS325032GC**	**JGS325035GC**	**JGS325036GC**	**JGFCT250**

IEC/UL/CSA—70/65

Ampere Rating	LS Catalog Number	LSI Catalog Number	LSG Catalog Number	LSIG Catalog Number	Neutral CT for LSG and LSIG ① Catalog Number
50	**JGH305033GC**	**JGH305032GC**	**JGH305035GC**	**JGH305036GC**	**JGFCT050**
100	**JGH310033GC**	**JGH310032GC**	**JGH310035GC**	**JGH310036GC**	**JGFCT100**
160	**JGH316033GC**	**JGH316032GC**	**JGH316035GC**	**JGH316036GC**	**JGFCT160**
250	**JGH325033GC**	**JGH325032GC**	**JGH325035GC**	**JGH325036GC**	**JGFCT250**

Note

① Required for four-wire systems if neutral protection is required.

Accessories Selection Guide and Ordering Information

JG-Frame

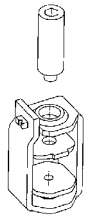

T250FJ

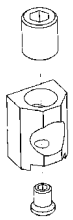

TA250FJ

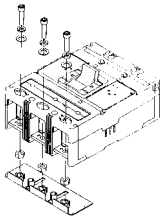

Endcap Kit

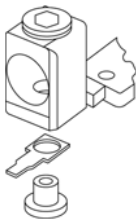

Control Wire Terminal Kit

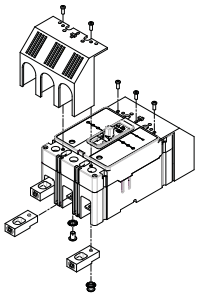

Rear Fed Terminals

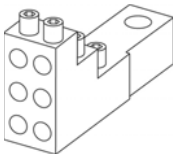

Multiwire Connectors

Load and Line Terminals

Maximum Breaker Amperes	Terminal Body Material	Wire Type	Metric Wire Range mm^2	AWG Wire Range/ Number of Conductors	Catalog Number
Standard Pressure Type Terminals					
250	Stainless steel	Cu	25–185	#4–350 (1)	**T250FJ** ①
250	Aluminum	Cu/Al	10–185	#8–350 (1)	**TA250FJ** ①②

JG-Frame circuit breakers include aluminum terminals TA250FJ as standard. When optional stainless steel only terminals are required, order by catalog number.

Endcap Kits

Number of Poles	Catalog Number Metric	Catalog Number Imperial
3	**FJ3RTWK**	**FJ3RTDK**
4	**FJ4RTWK**	**FJ4RTDK**

Endcap kits are used on J250-Frame breaker to connect busbar or similar electrical connections. Includes hardware.

Control Wire Terminal Kit

Description	Catalog Number
Package of 14 (priced individually)	**FJCWTK**

For use with aluminum or copper terminals only.

Rear Fed Terminals

Maximum Amperes	Wire Size Range AWG Cu	Catalog Number
250	#4–350 kcmil	**TA250JGRF**
		3TA250JGRF

Rear fed terminals allow the cable to connect to the breaker from the back instead of the top. Terminal shields or interphase barriers are included with each rear fed terminal kit (depending on frame size). When catalog number starts with a 3, it indicates a kit with three terminals in each kit. Catalog number beginning with a TA indicates one terminal.

Base Mounting Hardware

Base mounting hardware is included with a circuit breaker or molded case switch. (Included with breaker.) If required separately, order 66A2546G02.

Terminal Shields IP30

Location	Number of Poles	Catalog Number
Line or Load	2, 3	**FJTS3K**
	4	**FJTS4K**

Interphase Barriers

Number of Poles	Catalog Number
3	**FJIPBK** ③
4	**FJIPBK4** ③

Multiwire Connectors

Field-installed multiwire connectors for the load side (OFF) end terminals are used to distribute the load from the circuit breaker to multiple devices without the use of separate distribution terminal blocks.

Multiwire lug kits include terminal shield, mounting hardware, insulators and tin-plated aluminum connectors to replace three mechanical load lugs. UL listed as used on the load side (OFF) end.

JG-Frame Multiwire Connectors Ordering Information (Package of 3)

Maximum Amperes	Wires per Terminal	Wire Size Range AWG Cu	Kit Catalog Number
250	3	14–2	**3TA250FJ3**
250	6	14–6	**3TA250FJ6**

Notes

① Individually packed.
② Standard line and load.
③ Individually priced.

Accessories

Allowable Accessory Combinations

Different combinations of accessories can be supplied, depending on the types of accessories and the number of poles in the circuit breaker.

JG-Frame Accessories

Description	Reference Page	Two- and Three-Pole Left	Center	Right	Four-Pole Left	Center	Right	Neutral
Internal Accessories (Only one internal accessory per pole)								
Alarm lockout (Make/Break)	**V4-T2-109**	—	—	■	—	—	■	—
Auxiliary switch (1A, 1B)	**V4-T2-109**	—	—	■	—	—	■	—
Auxiliary switch (2A, 2B)	**V4-T2-109**	—	—	■	—	—	■	—
Auxiliary switch and alarm switch combination	**V4-T2-109**	—	—	■	—	—	■	—
Shunt trip—standard	**V4-T2-109**	■	—	—	■	—	—	—
Undervoltage release mechanism	**V4-T2-110**	■	—	—	■	—	—	—
External Accessories								
End cap kit	**V4-T2-41**	●	●	●	●	●	●	●
Control wire terminal kit	**V4-T2-41**	●	●	●	●	●	●	●
Rear fed terminals	**V4-T2-41**	●	●	●	●	●	●	●
Multiwire connectors	**V4-T2-41**	●	●	●	●	●	●	●
Base mounting hardware	**V4-T2-41**	●	●	●	●	●	●	●
Interphase barriers	**V4-T2-41**	●	●	●	●	●	●	●
Padlockable handle block	**V4-T2-107**	—	■	—	—	■	—	—
Padlockable handle lock hasp	**V4-T2-107**	❑	—	❑	❑	—	❑	—
Key interlock kit	**V4-T2-107**	❑	—	❑	❑	—	❑	—
Sliding bar interlock—requires two breakers	**V4-T2-107**	●	●	●	—	—	—	—
Electrical operator	**V4-T2-107**	●	●	●	●	●	●	●
Plug-in adapters	**V4-T2-107**	●	●	●	●	●	●	●
Handle mechanisms	**V4-T2-420**	●	●	●	●	●	●	●
Earth leakage/ground fault protector	**V4-T2-92**	●	●	●	●	●	●	●
Drawout cassette	**V4-T2-115**	●	●	●	●	●	●	●
Digitrip 310+ test kit	**V4-T2-36**	●	●	●	●	●	●	●
Ammeter/cause of trip display	**V4-T2-106**	●	●	●	●	●	●	●
Cause of trip LED module	**V4-T2-106**	●	●	●	●	●	●	●
Modifications (Refer to Eaton)								
Moisture fungus treatment	**V4-T2-105**	●	●	●	●	●	●	●
Freeze-tested circuit breakers	—	●	●	●	●	●	●	●
Marine/naval application, UL 489 supplement SA and SB	①	●	●	●	●	●	●	●

Legend

■ Applicable in indicated pole position
❑ May be mounted on left or right pole—not both
● Accessory available/modification available

Note

① Contact Eaton.

Technical Data and Specifications

UL 489/IEC 60947-2 Interrupting Capacity (Symmetrical Amperes) (kA) Ratings

Circuit Breaker Type	Number of Poles	Volts AC (50/60 Hz) 220–240 I_{cu}	220–240 I_{cs}	380–415 I_{cu}	380–415 I_{cs}	480	600	690 ② I_{cu}	690 ② I_{cs}	Volts DC ① 250 ②③
JGE250	2, 3, 4	65	65	25	25	25	18	12	6	10
JGS250	2, 3, 4	85	85	40	40	35	18	12	6	22
JGH250	2, 3, 4	100	100	70	70	65	25	14	7	22
JGC250 ④	3, 4	200	200	100	100	100	35	16	12	42
JGU250 ④	3, 4	200	200	150	150	150	50	18	14	50
JGX250 ④	3, 4	200	200	200	200	200	50	18	14	50

UL 489 Current Limiting Data

Frame	Circuit	Ip (kA)	I^2T (10^6A^2S)
JGC	240 V/200 kA	45.1	1.820
JGC	480 V/100 kA	45.1	1.820
JGC	600 V/35 kA	32.8	2.140
JGU	240 V/200 kA	45.1	1.820
JGU	480 V/150 kA	45.1	1.820
JGU	600 V/50 kA	32.8	2.140
JGX	240 V/200 kA	45.1	1.820
JGX	480 V/200 kA	45.1	1.820
JGX	600 V/50 kA	32.8	2.140

JG 310+ Specifications

Description	Specification
Trip Unit Type	Digitrip RMS 310+
Breaker Type	
Frame designation	JG
Frames available	50 A, 100 A, 160 A 250 A
Continuous current range (A)	20–250A
Ground fault pickup (A)	10–250A
Interrupting capacities at 480 Vac (kAIC)	35, 65, 100, 150, 200
100% rated	Yes
Protection	
Ordering options	LS, LSI, LSG, LSIG
Arcflash reduction maintenance system (or maintenance mode)	No
Interchangeable trip unit	Yes
High load alarm (suffix B20) ⑤	Yes
Ground fault alarm with trip (suffix B21) ⑤	Yes
Ground fault alarm, no trip (suffix B22) ⑤	Yes
Zone selective interlocking (suffix ZG)	LSI, LSIG
Cause of trip indication	Yes
Thru-cover accessories	Yes

Notes

① DC ratings apply to substantially non-inductive circuits.
② Two-pole circuit breaker, or two poles of three-pole circuit breaker.
③ Time constant is 3 milliseconds minimum at 10 kA and 8 milliseconds minimum at 22 kA.
④ Current limiting per UL 489.
⑤ B2x suffixes cannot be combined with B2x suffixes.

JG 310+ Adjustability Specifications

310+ Settings		JG Frame 50 A	100 A	160 A	250 A
I_r = continuous current or long delay pickup (amperes) (All 310+)	I_r				
	A	20	40	63	100
	B	20	45	80	125
	C	25	50	90	150
	D	30	63	100	160
	E	32	70	110	175
	F	40	80	125	200
	G	45	90	150	225
	H (= I_n)	50	100	160	250
t_r = long delay time (seconds) (All 310+)	Position 1	2	2	2	2
	Position 2	4	4	4	4
	Position 3	7	7	7	7
	Position 4	10	10	10	10
	Position 5	12	12	12	12
	Position 6	15	15	15	15
	Position 7	20	20	20	20
	Position 8	24	24	24	24
I_{sd} (x I_r) = short delay pickup (All 310+)	Position 1	2x	2x	2x	2x
	Position 2	3x	3x	3x	3x
	Position 3	4x	4x	4x	4x
	Position 4	5x	5x	5x	5x
	Position 5	6x	6x	6x	6x
	Position 6	7x	7x	7x	7x
	Position 7	8x	8x	8x	8x
	Position 8	10x	10x	10x	10x
	Position 9	14x	14x	14x	14x
t_{sd} = short delay time I^2t (milliseconds) (LS, LSG)	Fixed	67 at10x	67 at10x	67 at10x	67 at10x
t_{sd} = short delay time flat (milliseconds) (LSI, LSIG)	Position 1	Inst	Inst	Inst	Inst
	Position 2	120	120	120	120
	Position 3	300	300	300	300
I_g = gound fault pickup (amperes) (LSG, LSIG)	Position 1	10	20	32	50
	Position 2	15	30	48	75
	Position 3	20	40	64	100
	Position 4	30	60	96	150
	Position 5	40	80	128	200
	Position 6	50	100	160	250
t_g = ground fault delay time (milliseconds) (LSG, LSIG)	Position 1	Inst	Inst	Inst	Inst
	Position 2	120	120	120	120
	Position 3	300	300	300	300
Independently Adjustable Instantaneous (I_i) setting ①	N/A				
Maintenance Mode pickup (2.5 x I_n) (amperes) ②	N/A				

Notes

① Not available for JG. Independently adjustable Ii setting available in LG, NG and RG ALSI and ALSIG trip units.

② Maintenance Mode not available for JG frames. It is available for KD, LD, MDL, LG, NG, and RG.

Dimensions and Weights

Approximate Dimensions in Inches (mm)

JG-Frame

Number of Poles	Width	Height	Depth
2, 3	4.13 (104.9)	7.00 (177.8)	3.57 (90.7)
4	5.34 (135.6)	7.00 (177.8)	3.57 (90.7)

JG-Frame

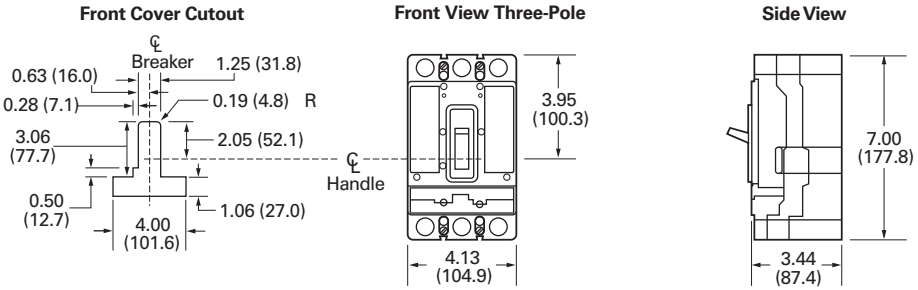

Approximate Shipping Weight in Lbs (kg)

JG-Frame

Breaker Type	Number of Poles 2, 3	4
JGC	6.00 (2.70)	8.00 (3.60)
JGE	6.00 (2.70)	8.00 (3.60)
JGH	6.00 (2.70)	8.00 (3.60)
JGS	6.00 (2.70)	8.00 (3.60)
JGU	6.00 (2.70)	8.00 (3.60)
JGX	6.00 (2.70)	8.00 (3.60)

JG-Frame With Earth Leakage Module

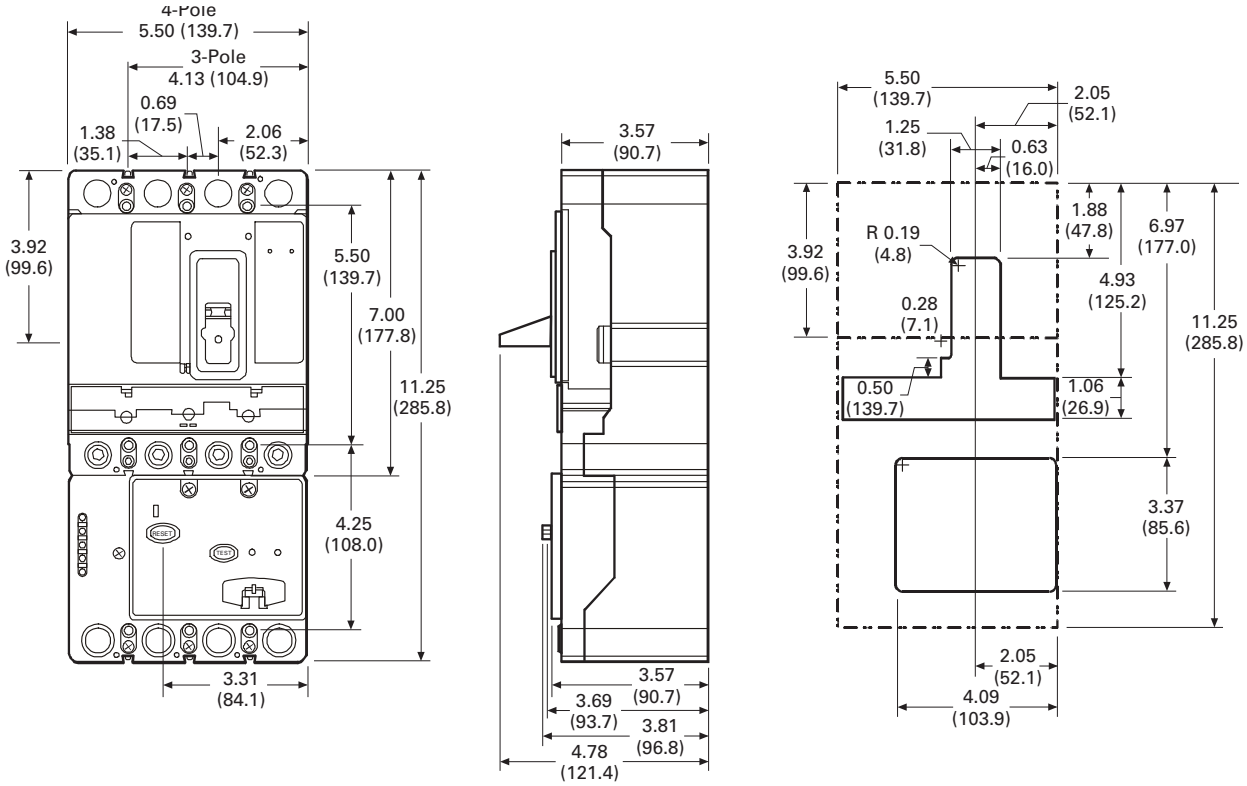

LG-Frame (250–630 Amperes)

Contents

Description	Page
EG-Frame (15–125 Amperes)	V4-T2-15
JG-Frame (63–250 Amperes)	V4-T2-29
LG-Frame (250–630 Amperes)	
Catalog Number Selection	V4-T2-48
Product Selection	V4-T2-49
Accessories	V4-T2-60
Technical Data and Specifications	V4-T2-61
Dimensions and Weights	V4-T2-63
NG-Frame (320–1200 Amperes)	V4-T2-65
RG-Frame (800–2500 Amperes)	V4-T2-74
Motor Circuit Protectors (MCP)	V4-T2-85
Motor Protector Circuit Breakers (MPCB)	V4-T2-89
30 mA Ground Fault (Earth Leakage) Module	V4-T2-92
Current Limiting Circuit Breaker Module	V4-T2-96
High Instantaneous Circuit Breaker for Selective Coordination	V4-T2-101
Special Features and Accessories	V4-T2-104
Motor Operators	V4-T2-112
Plug-In Blocks	V4-T2-114
Drawout Cassette	V4-T2-115

LG-Frame (250–630 Amperes)

Product Description

LG breaker is HACR rated.

Catalog Number Selection

This information is presented only as an aid to understanding catalog numbers.
It is not to be used to build catalog numbers for circuit breakers or trip units.

Series G—LG-Frame (250–630 Amperes)

L G S 3 600 FA G C

Frame
- **L**

Standard/Application
- **G** = IEC/CE/UL/CSA

Performance

	600	480	415	240
E	18	35	35	65
S	25	50	50	85
H	35	65	70	100
C	50	100	100	200
U	65	150	150	200
X	65	200	200	200
K	Molded case switch			

Number of Poles
- **3** = Three
- **4** = Four—Neutral 0% protected
- **6** = Four—Neutral 60% protected
- **7** = Four—Neutral 100% protected
- **8** = Four—Neutral 0–60% protected
- **9** = Four—Neutral 0–100 protected

Amperes
- **250**
- **300**
- **350**
- **400**
- **500**
- **600**
- **630**

Trip Unit
- **AA** = Adj. adj.
- **FA** = Fixed adj.
- **KS** = Molded case switch
- **33** = 310+ electronic LS
- **32** = 310+ electronic LSI
- **35** = 310+ electronic LSG
- **36** = 310+ electronic LSIG
- **38** = 310+ electronic ALSI
- **39** = 310+ electronic ALSIG
- **NN** = Frame only (630 A only; no trip unit)

Terminations/Hardware

Terminals	Mounting Hardware
M = Metric end caps	Metric
E = Imperial end caps	Imperial
G = Line/load standard	Metric
W = Without terminals	

Rating
- **Blank** = 80% rated
- **C** = 100% rated (for LGE, LGS and LGH only)

Trip Unit

LT 3 600 FA B20

Trip
- **LT**

Number of Poles
- **3** = Three
- **4** = Four—neutral 0% protected
- **8** = Four—neutral 0/60% protected
- **9** = Four—neutral 0/100% protected

Amperes
- **250**
- **300**
- **350**
- **400**
- **500**
- **600**
- **630**

Trip Unit
- **AA** = Adj. adj., thermal-magnetic
- **FA** = Fixed adj., thermal-magnetic
- **KS** = Molded case switch
- **33** = 310+ electronic LS
- **32** = 310+ electronic LSI
- **35** = 310+ electronic LSG
- **36** = 310+ electronic LSIG
- **38** = 310+ electronic ALSI
- **39** = 310+ electronic ALSIG

Features (ETU Only) ①②
- **Blank**= No feature
- **B20** = High load alarm
- **B21** = Ground fault alarm, with trip
- **B22** = Ground fault alarm, no trip
- **ZG** = Zone selective interlocking

Notes

① Bxx features cannot be combined with other Bxx features.
② B21 and B22 available with LSG and LSIG trip units.

Product Selection

Complete Breaker (Includes Frame, Trip Unit, Standard Terminals and Mounting Hardware)

LG-Frame

LG-Frame—630 Amperes (600 Amperes UL, CSA)
IC Rating: 35 kAIC at 415 and 480 Vac ①

	Three-Pole ②		Four-Pole (0%) ③	
	Fixed Thermal, Adjustable Magnetic	Adjustable Thermal, Adjustable Magnetic ④⑤	Fixed Thermal, Adjustable Magnetic	Adjustable Thermal, Adjustable Magnetic ④⑤
Ampere Rating	Catalog Number	Catalog Number	Catalog Number	Catalog Number
250	LGE3250FAG	LGE3250AAG	LGE4250FAG	LGE4250AAG
300	LGE3300FAG	—	LGE4300FAG	—
320	—	LGE3320AAG	—	LGE4320AAG
350	LGE3350FAG	—	LGE4350FAG	—
400	LGE3400FAG	LGE3400AAG	LGE4400FAG	LGE4400AAG
500	LGE3500FAG	LGE3500AAG	LGE4500FAG	LGE4500AAG
600	LGE3600FAG	—	LGE4600FAG	—
630 ④	—	LGE3630AAG	—	LGE4630AAG

LG-Frame

LG-Frame—630 Amperes (600 Amperes UL, CSA)
IC Rating: 50 kAIC at 415 and 480 Vac ①

	Three-Pole ②		Four-Pole (0%) ③	
	Fixed Thermal, Adjustable Magnetic	Adjustable Thermal, Adjustable Magnetic ④⑤	Fixed Thermal, Adjustable Magnetic	Adjustable Thermal, Adjustable Magnetic ④⑤
Ampere Rating	Catalog Number	Catalog Number	Catalog Number	Catalog Number
250	LGS3250FAG	LGS3250AAG	LGS4250FAG	LGS4250AAG
300	LGS3300FAG	—	LGS4300FAG	—
320	—	LGS3320AAG	—	LGS4320AAG
350	LGS3350FAG	—	LGS4350FAG	—
400	LGS3400FAG	LGS3400AAG	LGS4400FAG	LGS4400AAG
500	LGS3500FAG	LGS3500AAG	LGS4500FAG	LGS4500AAG
600	LGS3600FAG	—	LGS4600FAG	—
630 ④	—	LGS3630AAG	—	LGS4630AAG

LG-Frame

LG-Frame—630 Amperes (600 Amperes UL, CSA)
IC Rating: 70 kAIC at 415, 65 kAIC at 480 Vac ①

	Three-Pole ②		Four-Pole (0%) ③	
	Fixed Thermal, Adjustable Magnetic	Adjustable Thermal, Adjustable Magnetic ④⑤	Fixed Thermal, Adjustable Magnetic	Adjustable Thermal, Adjustable Magnetic ④⑤
Ampere Rating	Catalog Number	Catalog Number	Catalog Number	Catalog Number
250	LGH3250FAG	LGH3250AAG	LGH4250FAG	LGH4250AAG
300	LGH3300FAG	—	LGH4300FAG	—
320	—	LGH3320AAG	—	LGH4320AAG
350	LGH3350FAG	—	LGH4350FAG	—
400	LGH3400FAG	LGH3400AAG	LGH4400FAG	LGH4400AAG
500	LGH3500FAG	LGH3500AAG	LGH4500FAG	LGH4500AAG
600	LGH3600FAG	—	LGH4600FAG	—
630 ④	—	LGH3630AAG	—	LGH4630AAG

Notes

① Replace suffix "G" with "W" for no line and load terminals.
② For two-pole applications, use two outer poles.
③ Neutral protection is indicated by the fourth character: 4 = 0%, 7 = 100%, 8 = adjustable 0–60% and 9 = 0–100%. Neutral is on LH side.
④ 320/630 amperes is not a UL or CSA listed rating. 600 amperes is the maximum UL and CSA rating for the LG.
⑤ Adjustable thermal units are typically used in IEC markets and are not UL or CSA listed.

Complete Breaker (Includes Frame, Trip Unit, Standard Terminals and Mounting Hardware)

2

LG-Frame

LG-Frame—630 Amperes (600 Amperes UL, CSA), Current Limiting Per UL 489 IC Rating: 100 kAIC at 415 and 480 Vac ①

	Three-Pole ②		Four-Pole (0%) ③	
	Fixed Thermal, Adjustable Magnetic	Adjustable Thermal, Adjustable Magnetic ④⑤	Fixed Thermal, Adjustable Magnetic	Adjustable Thermal, Adjustable Magnetic ④⑤
Ampere Rating	Catalog Number	Catalog Number	Catalog Number	Catalog Number
250	LGC3250FAG	LGC3250AAG	LGC4250FAG	LGC4250AAG
300	LGC3300FAG	—	LGC4300FAG	—
320	—	LGC3320AAG	—	LGC4320AAG
350	LGC3350FAG	—	LGC4350FAG	—
400	LGC3400FAG	LGC3400AAG	LGC4400FAG	LGC4400AAG
500	LGC3500FAG	LGC3500AAG	LGC4500FAG	LGC4500AAG
600	LGC3600FAG	—	LGC4600FAG	—
630 ④	—	LGC3630AAG	—	LGC4630AAG

LG-Frame

LG-Frame—630 Amperes (600 Amperes UL, CSA), Current Limiting Per UL 489 IC Rating: 150 kAIC at 415 and 480 Vac ①

	Three-Pole ②		Four-Pole (0%) ③	
	Fixed Thermal, Adjustable Magnetic	Adjustable Thermal, Adjustable Magnetic ④⑤	Fixed Thermal, Adjustable Magnetic	Adjustable Thermal, Adjustable Magnetic ④⑤
Ampere Rating	Catalog Number	Catalog Number	Catalog Number	Catalog Number
250	LGU3250FAG	LGU3250AAG	LGU4250FAG	LGU4250AAG
300	LGU3300FAG	—	LGU4300FAG	—
320	—	LGU3320AAG	—	LGU4320AAG
350	LGU3350FAG	—	LGU4350FAG	—
400	LGU3400FAG	LGU3400AAG	LGU4400FAG	LGU4400AAG
500	LGU3500FAG	LGU3500AAG	LGU4500FAG	LGU4500AAG
600	LGU3600FAG	—	LGU4600FAG	—
630 ④	—	LGU3630AAG	—	LGU4630AAG

LG-Frame

LG-Frame—630 Amperes (600 Amperes UL, CSA), Current Limiting Per UL 489 IC Rating: 200 kAIC at 415 and 480 Vac ①

	Three-Pole ②		Four-Pole (0%) ③	
	Fixed Thermal, Adjustable Magnetic	Adjustable Thermal, Adjustable Magnetic ④⑤	Fixed Thermal, Adjustable Magnetic	Adjustable Thermal, Adjustable Magnetic ④⑤
Ampere Rating	Catalog Number	Catalog Number	Catalog Number	Catalog Number
250	LGX3250FAG	LGX3250AAG	LGX4250FAG	LGX4250AAG
300	LGX3300FAG	—	LGX4300FAG	—
320	—	LGX3320AAG	—	LGX4320AAG
350	LGX3350FAG	—	LGX4350FAG	—
400	LGX3400FAG	LGX3400AAG	LGX4400FAG	LGX4400AAG
500	LGX3500FAG	LGX3500AAG	LGX4500FAG	LGX4500AAG
600	LGX3600FAG	—	LGX4600FAG	—
630 ④	—	LGX3630AAG	—	LGX4630AAG

Notes

① Replace suffix "G" with "W" for no line and load terminals.
② For two-pole applications, use two outer poles.
③ Neutral protection is indicated by the fourth character: 4 = 0%, 7 = 100%, 8 = adjustable 0–60% and 9 = 0–100%. Neutral is on LH side.
④ 320/630 amperes is not a UL or CSA listed rating. 600 amperes is the maximum UL and CSA rating for the LG.
⑤ Adjustable thermal units are typically used in IEC markets and are not UL or CSA listed.

Molded Case Switches ①

Ampere Rating	Number of Poles	Catalog Number
400	3 ②	LGK3400KSG
	4	LGK4400KSG
630 ③	3 ②	LGK3630KSG
	4	LGK4630KSG

Frame—IC Rating at 415/480 Volts

Maximum Amperes ③	Three-Pole ② Catalog Number	Four-Pole 0% Catalog Number
35/35		
630 ③	LGE3630NN	LGE4630NN
	LGE3630NNWC	—
50/50		
630 ③	LGS3630NN	LGS4630NN
	LGS3630NNWC	—
70/53		
630 ③	LGH3630NN	LGH4630NN
	LGH3630NNWC	—
100/100 Current Limiting Per UL 489		
630	LGC3630NN	LGC4630NN
150/150 Current Limiting Per UL 489		
630	LGU3630NN	LGU4630NN
200/200 Current Limiting		
630	LGX3630NN	LGX4630NN

Thermal-Magnetic Trip Unit

Ampere Rating	Three-Pole ② Fixed Thermal, Adjustable Magnetic Catalog Number	Three-Pole ② Adjustable Thermal, Adjustable Magnetic ④ Catalog Number	Four-Pole (0%) ⑤ Fixed Thermal, Adjustable Magnetic Catalog Number	Four-Pole (0%) ⑤ Adjustable Thermal, Adjustable Magnetic ④ Catalog Number
250	LT3250FA	LT3250AA	LT4250FA	LT4250AA
300	LT3300FA	—	LT4300FA	—
320	—	LT3320AA	—	LT4320AA
350	LT3350FA	—	LT4350FA	—
400	LT3400FA	LT3400AA	LT4400FA	LT4400AA
500	LT3500FA	LT3500AA	LT4500FA	LT4500AA
600	LT3600FA	—	LT4600FA	—
630	—	LT3630AA	—	LT4630AA

Notes

① Molded case switches will trip above 6300 amperes.
② For two-pole applications, use two outer poles.
③ 630 amperes is not a UL or CSA listed rating. 600 amperes is the maximum UL and CSA rating for the LG.
④ Adjustable thermal, adjustable magnetic trip units are typically used in IEC markets and are not UL or CSA listed.
⑤ Neutral protection is indicated by the third character: 4 = 0%, 7 = 100%, 8 = adjustable 0–60% and 9 = 0–100%.
⑥ 100% rated frame.

Digitrip 310+ Electronic Trip Units

See 310+ adjustability specifications on **Page V4-T2-62**.

Ampere Rating	LS Catalog Number	LSI Catalog Number	LSG Catalog Number	LSIG Catalog Number	Neutral CT for LSG and LSIG ① Catalog Number
Three-Pole					
250	**LT325033**	**LT325032**	**LT325035**	**LT325036**	**LGFCT250**
400	**LT340033**	**LT340032**	**LT340035**	**LT340036**	**LGFCT400**
600	**LT360033**	**LT360032**	**LT360035**	**LT360036**	**LGFCT600**
630 ②	**LT363033**	**LT363032**	**LT363035**	**LT363036**	**LGFCT600**
Four-Pole ③④					
250	**LT425033**	**LT425032**	**LT425035**	**LT425036**	—
400	**LT440033**	**LT440032**	**LT440035**	**LT440036**	—
600	**LT460033**	**LT460032**	**LT460035**	**LT460036**	—
630 ②	**LT463033**	**LT463032**	**LT463035**	**LT463036**	—

310+ Electronic Trip Unit Accessories

Description	Catalog Number
Electronic portable test kit	**MTST230V**
Trip unit tamper protection wire seal	**5108A03H01**
External neutral sensor (630 A)	**LGFCT630**
External neutral sensor (600 A)	**LGFCT600**
External neutral sensor (400 A)	**LGFCT400**
External neutral sensor (250 A)	**LGFCT250**
Breaker-mount cause-of-trip indication	**TRIP-LED**
Breaker-mount ammeter module	**DIGIVIEW**
Remote-mount ammeter module	**DIGIVIEWR06**

Notes

① Required for four-wire systems if neutral protection is desired.
② 630 amperes is not a UL or CSA listed rating. 600 amperes is the maximum UL and CSA listed rating for the LG.
③ Neutral protection: 4= 0%, 6 = 60%, 7 = 100%. Electronic trip unit neutral protection is not adjustable.
④ Four-pole LSG and LSIG trip units are only available with 0% neutral protection.

IC Rating at 415/480 V
Complete LG Breakers with Electronic Trip Unit (Includes Frame, Trip Unit, Standard Terminals and Mounting Hardware) ①

See 310+ adjustability specifications on **Page V4-T2-62**.

IC Rating: 35 kAIC at 415 and 480 Vac

Ampere Rating	LS Catalog Number	LSI Catalog Number	LSG Catalog Number	LSIG Catalog Number	Neutral CT for LSG and LSIG ② Catalog Number
Three-Pole ③					
250	LGE325033G	LGE325032G	LGE325035G	LGE325036G	LGFCT250
400	LGE340033G	LGE340032G	LGE340035G	LGE340036G	LGFCT400
600	LGE360033G	LGE360032G	LGE360035G	LGE360036G	LGFCT600
630 ④	LGE363033G	LGE363032G	LGE363035G	LGE363036G	LGFCT600
Four-Pole ⑤					
250	LGE425033G	LGE425032G	LGE425035G	LGE425036G	—
400	LGE440033G	LGE440032G	LGE440035G	LGE440036G	—
600	LGE460033G	LGE460032G	LGE460035G	LGE460036G	—
630 ④	LGE463033G	LGE463032G	LGE463035G	LGE463036G	—

IC Rating: 50 kAIC at 415 and 480 Vac

Ampere Rating	LS Catalog Number	LSI Catalog Number	LSG Catalog Number	LSIG Catalog Number	Neutral CT for LSG and LSIG ② Catalog Number
Three-Pole ③					
250	LGS325033G	LGS325032G	LGS325035G	LGS325036G	LGFCT250
400	LGS340033G	LGS340032G	LGS340035G	LGS340036G	LGFCT400
600	LGS360033G	LGS360032G	LGS360035G	LGS360036G	LGFCT600
630 ④	LGS363033G	LGS363032G	LGS363035G	LGS363036G	LGFCT600
Four-Pole ⑤⑥					
250	LGS425033G	LGS425032G	LGS425035G	LGS425036G	—
400	LGS440033G	LGS440032G	LGS440035G	LGS440036G	—
600	LGS460033G	LGS460032G	LGS460035G	LGS460036G	—
630 ④	LGS463033G	LGS463032G	LGS463035G	LGS463036G	—

IC Rating: 70 kAIC at 415 Vac, 65 kAIC at 480 Vac

Ampere Rating	LS Catalog Number	LSI Catalog Number	LSG Catalog Number	LSIG Catalog Number	Neutral CT for LSG and LSIG ② Catalog Number
Three-Pole ③					
250	LGH325033G	LGH325032G	LGH325035G	LGH325036G	LGFCT250
400	LGH340033G	LGH340032G	LGH340035G	LGH340036G	LGFCT400
600	LGH360033G	LGH360032G	LGH360035G	LGH360036G	LGFCT600
630 ④	LGH363033G	LGH363032G	LGH363035G	LGH363036G	LGFCT600
Four-Pole ⑤⑥					
250	LGH425033G	LGH425032G	LGH425035G	LGH425036G	—
400	LGH440033G	LGH440032G	LGH440035G	LGH440036G	—
600	LGH460033G	LGH460032G	LGH460035G	LGH460036G	—
630 ④	LGH463033G	LGH463032G	LGH463035G	LGH463036G	—

Notes

① Replace suffix "G" with "W" for no line and load terminals.
② Required for four-wire systems if neutral protection is desired.
③ For two-pole applications, use two outer poles.
④ 630 amperes is not a UL or CSA listed rating. 600 amperes is the maximum UL and CSA listed rating for the LG.
⑤ Neutral protection: 4= 0%, 6 = 60%, 7 = 100%. Electronic trip unit neutral protection is not adjustable.
⑥ Four-pole breakers with LSG and LSIG trip units are only available with 0% neutral protection.

IC Rating at 415/480 V
Complete LG Breakers with Electronic Trip Unit (Includes Frame, Trip Unit, Standard Terminals and Mounting Hardware) ①

See 310+ adjustability specifications on **Page V4-T2-62**.

IC Rating: 100 kAIC at 415 Vac and 480 Vac, Current Limiting Per UL 489

Ampere Rating	LS Catalog Number	LSI Catalog Number	LSG Catalog Number	LSIG Catalog Number	Neutral CT for LSG and LSIG ② Catalog Number
Three-Pole ③					
250	**LGC325033G**	**LGC325032G**	**LGC325035G**	**LGC325036G**	**LGFCT250**
400	**LGC340033G**	**LGC340032G**	**LGC340035G**	**LGC340036G**	**LGFCT400**
600	**LGC360033G**	**LGC360032G**	**LGC360035G**	**LGC360036G**	**LGFCT600**
630 ④	**LGC363033G**	**LGC363032G**	**LGC363035G**	**LGC363036G**	**LGFCT600**
Four-Pole ⑤⑥					
250	**LGC425033G**	**LGC425032G**	**LGC425035G**	**LGC425036G**	—
400	**LGC440033G**	**LGC440032G**	**LGC440035G**	**LGC440036G**	—
600	**LGC460033G**	**LGC460032G**	**LGC460035G**	**LGC460036G**	—
630 ④	**LGC463033G**	**LGC463032G**	**LGC463035G**	**LGC463036G**	—

IC Rating: 150 kAIC at 415 Vac and 480 Vac, Current Limiting Per UL 489

Ampere Rating	LS Catalog Number	LSI Catalog Number	LSG Catalog Number	LSIG Catalog Number	Neutral CT for LSG and LSIG ② Catalog Number
Three-Pole ③					
250	**LGU325033G**	**LGU325032G**	**LGU325035G**	**LGU325036G**	**LGFCT250**
400	**LGU340033G**	**LGU340032G**	**LGU340035G**	**LGU340036G**	**LGFCT400**
600	**LGU360033G**	**LGU360032G**	**LGU360035G**	**LGU360036G**	**LGFCT600**
630 ④	**LGU363033G**	**LGU363032G**	**LGU363035G**	**LGU363036G**	**LGFCT600**
Four-Pole ⑤					
250	**LGU425033G**	**LGU425032G**	**LGU425035G**	**LGU425036G**	—
400	**LGU440033G**	**LGU440032G**	**LGU440035G**	**LGU440036G**	—
600	**LGU460033G**	**LGU460032G**	**LGU460035G**	**LGU460036G**	—
630 ④	**LGU463033G**	**LGU463032G**	**LGU463035G**	**LGU463036G**	—

IC Rating: 200 kAIC at 415 Vac and 480 Vac, Current Limiting Per UL 489

Ampere Rating	LS Catalog Number	LSI Catalog Number	LSG Catalog Number	LSIG Catalog Number	Neutral CT for LSG and LSIG ② Catalog Number
Three-Pole ③					
250	**LGX325033G**	**LGX325032G**	**LGX325035G**	**LGX325036G**	**LGFCT250**
400	**LGX340033G**	**LGX340032G**	**LGX340035G**	**LGX340036G**	**LGFCT400**
600	**LGX360033G**	**LGX360032G**	**LGX360035G**	**LGX360036G**	**LGFCT600**
630 ④	**LGX363033G**	**LGX363032G**	**LGX363035G**	**LGX363036G**	**LGFCT600**
Four-Pole ⑤					
250	**LGX425033G**	**LGX425032G**	**LGX425035G**	**LGX425036G**	—
400	**LGX440033G**	**LGX440032G**	**LGX440035G**	**LGX440036G**	—
600	**LGX460033G**	**LGX460032G**	**LGX460035G**	**LGX460036G**	—
630 ④	**LGX463033G**	**LGX463032G**	**LGX463035G**	**LGX463036G**	—

Notes

① Replace suffix "G" with "W" for no line and load terminals.
② Required for four-wire systems if neutral protection is desired.
③ For two-pole applications, use two outer poles.
④ 630 amperes is not a UL or CSA listed rating. 600 amperes is the maximum UL and CSA listed rating for the LG.
⑤ Neutral protection: 4= 0%, 6 = 60%, 7 = 100%. Electronic trip unit neutral protection is not adjustable.
⑥ Four-pole breakers with LSG and LSIG trip units are only available with 0% neutral protection.

LG 100% Rated Circuit Breaker—Thermal-Magnetic Trip Unit

Complete Breaker (Includes Frame, Trip Unit, Standard Terminals and Mounting Hardware)

LG-Frame

LG-Frame—630 Amperes (600 Amperes UL, CSA) IC Rating: 35 kAIC at 415 and 480 Vac ①

Ampere Rating	Three-Pole ② Fixed Thermal, Adjustable Magnetic Catalog Number
250	**LGE3250FAGC**
300	**LGE3300FAGC**
320	—
350	**LGE3350FAGC**
400	**LGE3400FAGC**
500	**LGE3500FAGC**
600	**LGE3600FAGC**
630 ④	—

LG-Frame—630 Amperes (600 Amperes UL, CSA) IC Rating: 50 kAIC at 415 and 480 Vac ①

Ampere Rating	Three-Pole ② Fixed Thermal, Adjustable Magnetic Catalog Number
250	**LGS3250FAGC**
300	**LGS3300FAGC**
320	—
350	**LGS3350FAGC**
400	**LGS3400FAGC**
500	**LGS3500FAGC**
600	**LGS3600FAGC**
630 ④	—

LG-Frame—630 Amperes (600 Amperes UL, CSA) IC Rating: 70 kAIC at 415, 65 kAIC at 480 Vac ①

Ampere Rating	Three-Pole ② Fixed Thermal, Adjustable Magnetic Catalog Number
250	**LGH3250FAGC**
300	**LGH3300FAGC**
320	—
350	**LGH3350FAGC**
400	**LGH3400FAGC**
500	**LGH3500FAGC**
600	**LGH3600FAGC**
630 ④	—

Notes

① Replace suffix "G" with "W" for no line and load terminals.
② For two-pole applications, use two outer poles.

LG 100% Rated Electronic Breaker Per UL 489

See 310+ adjustability specifications on **Page V4-T2-62**.

IEC/UL/CSA 35 kAIC at 415 and 480 Vac

Ampere Rating	LS Catalog Number	LSI Catalog Number	LSG Catalog Number	LSIG Catalog Number	Neutral CT for LSG and LSIG ① Catalog Number
250	LGE325033GC	LGE325032GC	LGE325035GC	LGE325036GC	LGFCT250
400	LGE340033GC	LGE340032GC	LGE340035GC	LGE340036GC	LGFCT400
600	LGE360033GC	LGE360032GC	LGE360035GC	LGE360036GC	LGFCT600
630 ②	LGE363033GC	LGE363032GC	LGE363035GC	LGE363036GC	LGFCT600

IEC/UL/CSA 50 kAIC at 415 and 480 Vac

Ampere Rating	LS Catalog Number	LSI Catalog Number	LSG Catalog Number	LSIG Catalog Number	Neutral CT for LSG and LSIG ① Catalog Number
250	LGS325033GC	LGS325032GC	LGS325035GC	LGS325036GC	LGFCT250
400	LGS340033GC	LGS340032GC	LGS340035GC	LGS340036GC	LGFCT400
600	LGS360033GC	LGS360032GC	LGS360035GC	LGS360036GC	LGFCT600
630 ②	LGS363033GC	LGS363032GC	LGS363035GC	LGS363036GC	LGFCT600

IEC/UL/CSA 70 kAIC at 415 and 480 Vac

Ampere Rating	LS Catalog Number	LSI Catalog Number	LSG Catalog Number	LSIG Catalog Number	Neutral CT for LSG and LSIG ① Catalog Number
250	LGH325033GC	LGH325032GC	LGH325035GC	LGH325036GC	LGFCT250
400	LGH340033GC	LGH340032GC	LGH340035GC	LGH340036GC	LGFCT400
600	LGH360033GC	LGH360032GC	LGH360035GC	LGH360036GC	LGFCT600
630 ②	LGH363033GC	LGH363032GC	LGH363035GC	LGH363036GC	LGFCT600

Notes

① Required for four-wire systems if neutral protection is required.

② 630 amperes is not a UL or CSA listed rating. 600 amperes is the maximum UL and CSA listed rating for the LG.

LG Electronic Breaker with Arcflash Reduction Maintenance System

See 310+ adjustability specifications on **Page V4-T2-62**.

Series G LG circuit breakers are available with the Arcflash Reduction Maintenance System™ integrated into the electronic trip units helping to improve safety by providing a simple and reliable method to reduce fault clearing time. The Arcflash Reduction Maintenance System unit utilizes a separate analog trip circuit that provides faster interruption times than the standard (digital) "instantaneous" protection. Work locations downstream of a circuit breaker with an Arcflash Reduction Maintenance System unit can have a significantly lower incident energy level, reducing arc flash potential to the system.

LG with Arcflash Reduction Maintenance System

LG Electronic Breaker with Arcflash Reduction Maintenance System

Ampere Rating	ALSI Catalog Number	ALSIG Catalog Number	Neutral CT for LSG and LSIG ① Catalog Number
IEC/UL/CSA 35 kAIC at 415 and 480 Vac			
250	LGE325038G	LGE365039G	LGFCT250
400	LGE340038G	LGE340039G	LGFCT400
600	LGE360038G	LGE360039G	LGFCT600
630	LGE363038G	LGE363039G	LGFCT600
IEC/UL/CSA 50 kAIC at 415 and 480 Vac			
250	LGS325038G	LGS365039G	LGFCT250
400	LGS340038G	LGS340039G	LGFCT400
600	LGS360038G	LGS360039G	LGFCT600
630	LGS363038G	LGS363039G	LGFCT600
IEC/UL/CSA 70 kAIC at 415 and 480 Vac			
250	LGH325038G	LGH365039G	LGFCT250
400	LGH340038G	LGH340039G	LGFCT400
600	LGH360038G	LGH360039G	LGFCT600
630	LGH363038G	LGH363039G	LGFCT600
IEC/UL/CSA 100 kAIC at 415 and 480 Vac, Current Limiting Per UL 489			
250	LGC325038G	LGC365039G	LGFCT250
400	LGC340038G	LGC340039G	LGFCT400
600	LGC360038G	LGC360039G	LGFCT600
630	LGC363038G	LGC363039G	LGFCT600
IEC/UL/CSA 150 kAIC at 415 and 480 Vac, Current Limiting Per UL 489			
250	LGU325038G	LGU365039G	LGFCT250
400	LGU340038G	LGU340039G	LGFCT400
600	LGU360038G	LGU360039G	LGFCT600
630	LGU363038G	LGU363039G	LGFCT600
IEC/UL/CSA 200 kAIC at 415 and 480 Vac, Current Limiting Per UL 489			
250	LGX325038G	LGX365039G	LGFCT250
400	LGX340038G	LGX340039G	LGFCT400
600	LGX360038G	LGX360039G	LGFCT600
630	LGX363038G	LGX363039G	LGFCT600

LG Electronic Trip Units with Arcflash Reduction Maintenance System

Ampere Rating	ALSI Catalog Number	ALSIG Catalog Number	Neutral CT for LSG and LSIG ① Catalog Number
250	LT325038	LT325039	LGFCT250
400	LT340038	LT340039	LGFCT400
600	LT360038	LT360039	LGFCT600
630	LT363038	LT363039	LGFCT600

Note

① Required for four-wire systems if neutral protection is required.

Accessories Selection Guide and Ordering Information

Line and Load Terminals

Maximum Breaker Amperes	Terminal Body Material	Wire Type	AWG Wire Range/ Number of Conductors	Metric Wire Range (mm^2)	Number of Terminals Included	Catalog Number
400	Aluminum	Cu/Al	500–750 (1)	240–380 (1)	3	**3TA631LK** ①
400	Aluminum	Cu/Al	500–750 (1)	240–380 (1)	4	**4TA631LK** ①
400	Copper	Cu	500–750 (1)	240–380 (1)	3	**3T631LK** ①
400	Copper	Cu	500–750 (1)	240–380 (1)	4	**4T631LK** ①
630	Aluminum	Cu/Al	2–500 (2)	35–240 (2)	1	**TA632L**
630	Aluminum	Cu/Al	2–500 (2)	35–240 (2)	3	**3TA632LK** ①②
630	Aluminum	Cu/Al	2–500 (2)	35–240 (2)	4	**4TA632LK** ①②
630	Copper	Cu	2–500 (2)	35–240 (2)	3	**3T632LK** ①
630	Copper	Cu	2–500 (2)	35–240 (2)	4	**4T632LK** ①
400	Aluminum	Cu/Al	3–500 (1)	35–240 (1)	1	**TA350LK** ②
400	Copper	Cu	3–500 (1)	35–240 (1)	1	**T350LK**

Base Mounting Hardware

Base mounting hardware is included with a circuit breaker or molded case switch. (Included with breaker.) If required separately, order 66A4560G03.

Terminal Covers

Description	Catalog Number
Three-pole terminal cover ③	**LTS3K**
Four-pole terminal cover ③	**LTS4K**

End Cap Kits (MIO Metric Nuts)

Number of Poles	Catalog Number
3	**L3RTWK**
4	**L4RTWK**

Control Wire Terminal Kit

Description	Terminal Body Type	Catalog Number
Three-pole kit	Aluminum	**3TA632LKW**
Four-pole kit	Aluminum	**4TA632LKW**
Three-pole kit	Copper	**3T632LKW**
Four-pole kit	Copper	**4T632LKW**

Terminal Spreaders

Number of Poles	Catalog Number
3	**LGTEW3**
4	**LGTEW4**

Terminal Extensions

Number of Poles	Catalog Number
3	**LGTES3**
4	**LGTES4**

Handle Extension

Description	Catalog Number
Handle extension	**HEXLG**

Interphase Barrier

Package of 2	Catalog Number
Interphase barrier	**IPB3**

Rear Fed Terminals

Maximum Amperes	Wire Size Range AWG Cu	Catalog Number
400	2–500 kcmil	**TA350LKRF**
400	2–500 kcmil	**3TA350LKRF**
630	2–500 (2) kcmil	**TA632LKRF**
630	2–500 (2) kcmil	**3TA632LKRF**

Rear fed terminals allow the cable to connect to the breaker from the back instead of the top. Terminal shields or interphase barriers are included with each rear fed terminal kit (depending on frame size). When catalog number starts with a 3, it indicates a kit with three terminals in each kit. Catalog number beginning with a TA indicates one terminal.

Multiwire Connectors

Field-installed multiwire connectors for the load side (OFF) end terminals are used to distribute the load from the circuit breaker to multiple devices without the use of separate distribution terminal blocks.

Multiwire lug kits include terminal shield, mounting hardware, insulators and tin-plated aluminum connectors to replace three mechanical load lugs. UL listed as used on the load side (OFF) end.

LG-Frame Multiwire Connectors Ordering Information (Package of 3)

Maximum Amperes	Wires per Terminal	Wire Size Range AWG Cu	Kit Catalog Number
600	6	14–1/0	**3TA600L6K**

Notes

① Includes LTS3K (three-pole) or LTS4K (four-pole) terminal covers.
② Standard terminal included with complete breaker.
③ Included in TA63IL, T63IL, TA632L kits listed above.

Terminals and Terminal Cover for the LG Breaker—Includes LTS3K (Three-Pole) or LTS4K (Four-Pole) Terminal Covers

Note: Extended terminal covers add 2.13 inches (54.0 mm) to breaker length.

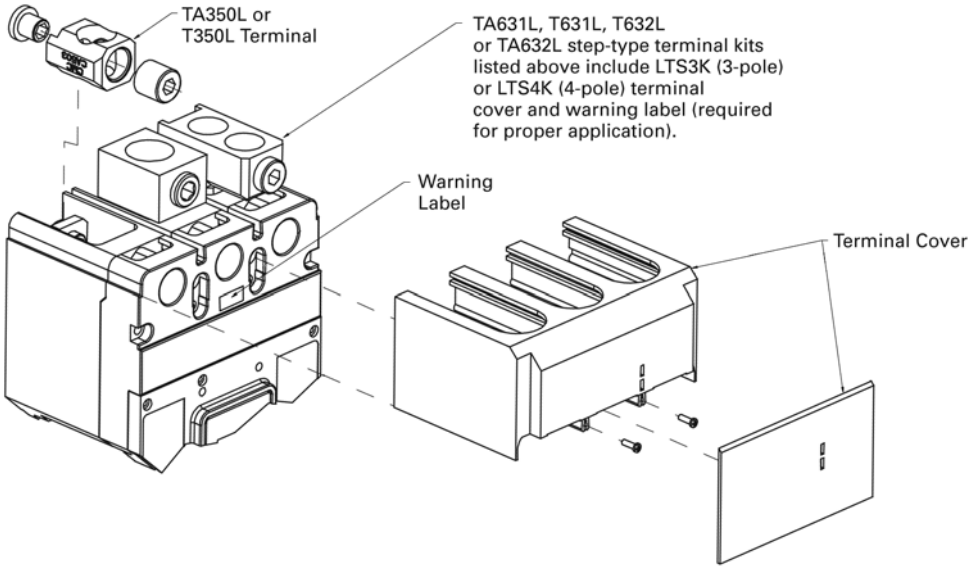

Accessories

Base Mounting Hardware

Base mounting hardware is included with a circuit breaker or molded case switch. (Included with breaker.) If required separately, order 66A4560G03.

Allowable Accessory Combinations

Different combinations of accessories can be supplied, depending on the types of accessories and the number of poles in the circuit breaker.

LG-Frame Accessories

Description	Reference Page	Three-Pole Left	Three-Pole Center	Three-Pole Right	Four-Pole Left	Four-Pole Center	Four-Pole Right	Four-Pole Neu.
Internal Accessories (Only One Internal Accessory Per Pole)								
Alarm lockout (Make/Break)	**V4-T2-109**			■			■	
Auxiliary switch (1A, 1B)	**V4-T2-109**			■			■	
Auxiliary switch (2A, 2B)	**V4-T2-109**			■			■	
Auxiliary switch and alarm switch combination	**V4-T2-109**			■			■	
Shunt trip—standard	**V4-T2-109**	■			■			
Undervoltage release mechanism	**V4-T2-110**	■			■			
External Accessories								
End cap kit	**V4-T2-58**	●			●			
Handle extension	**V4-T2-58**	●			●			
Terminal cover	**V4-T2-58**	●			●			
Rear fed terminals	**V4-T2-58**	●	●	●	●	●	●	●
Multiwire connectors	**V4-T2-58**	●	●	●	●	●	●	●
Padlockable handle block	**V4-T2-107**		■			■		
Padlockable handle lock hasp	**V4-T2-107**	❑		❑	❑		❑	
Key interlock kit	**V4-T2-107**	❑		❑	❑		❑	
Sliding bar interlock—requires two breakers	**V4-T2-107**	●	●	●	●	●	●	●
Electrical operator	**V4-T2-107**	●	●	●	●	●	●	●
Plug-in adapters	**V4-T2-107**	●	●	●	●	●	●	●
Rear connecting studs	**V4-T2-107**	●	●	●	●	●	●	●
Handle mechanisms	**V4-T2-420**	●	●	●	●	●	●	●
Earth leakage/ground fault protector	**V4-T2-92**	●	●	●	●	●	●	●
Drawout cassette	**V4-T2-115**	●	●	●	●	●	●	●
Digitrip 310+ test kit	**V4-T2-52**	●	●	●	●	●	●	●
Ammeter/cause of trip display	**V4-T2-106**	●	●	●	●	●	●	●
Cause of trip LED module	**V4-T2-106**	●	●	●	●	●	●	●
Modifications (Refer to Eaton)								
Moisture fungus treatment	**V4-T2-105**	●	●	●	●	●	●	●
Freeze-tested circuit breakers	—	●	●	●	●	●	●	●
Marine/naval application, UL 489 Supplement SA and SB	①	●	●	●	●	●	●	●

Legend

■ Applicable in indicated pole position
❑ May be mounted on left or right pole—not both
● Accessory available/modification available

Note

① Contact Eaton.

Technical Data and Specifications

Interrupting Capacity Ratings

UL 489/IEC 60947-2 Interrupting Capacity Ratings

Circuit Breaker Type	Number of Poles	Interrupting Capacity (kA rms Symmetrical Amperes) (kA) Volts AC (50/60 Hz) 240–240 Icu	240–240 Ics	380–415 Icu	380–415 Ics	480	600	690 Icu	690 Ics	Volts DC ① 250 ②③ Icu	250 ②③ Ics
LGE630	3, 4	65	65	35	35	35	18	12	6	22	22
LGS630	3, 4	85	85	50	50	50	25	20	10	22	22
LGH630	3, 4	100	100	70	70	65	35	25	13	42	42
LGC630 ④	3, 4	200	200	100	100	100	50	30	15	42	42
LGU630 ④	3, 4	200	200	150	150	150	65	35	18	50	50
LGX630 ④	3, 4	200 ⑤	200	200	200	200	65	35	18	50	50

UL 489 Current Limiting Data

Frame	Circuit	Ip (kA)	I^2T (10^6A^2S)
LGC	240 V/200 kA	56.4	5.873
LGC	480 V/100 kA	56.4	5.873
LGC	600 V/50 kA	56.4	6.690
LGU	240 V/200 kA	77.7	7.320
LGU	480 V/150 kA	77.7	7.320
LGU	600 V/65 kA	50.6	6.690
LGX	240 V/200 kA	77.7	7.320
LGX	480 V/200 kA	77.7	7.320
LGX	600 V/65 kA	50.6	6.690

LG 310+ Specifications

Description	Specification
Trip Unit Type	Digitrip RMS 310+
Breaker Type	
Frame designation	LG
Frames available	250 A, 400 A, 600 A
Continuous current range (A)	100–600 A
Ground fault pickup (A)	50–600 A
Interrupting capacities at 480 Vac (kAIC)	35, 65, 100, 150, 200
100% rated	Yes
Protection	
Ordering options	LS, LSI, LSG, LSIG, ALSI, ALSIG
Arcflash reduction maintenance system (or maintenance mode)	Yes
Interchangeable trip unit	Yes
High load alarm (suffix B20) ⑤	Yes
Ground fault alarm with trip (suffix B21) ⑤	Yes
Ground fault alarm, no trip (suffix B22) ⑤	Yes
Zone selective interlocking (suffix ZG)	LSI, LSIG, ALSI, ALSIG
Cause of trip indication	Yes
Thru-cover accessories	Yes

Notes

① DC rating apply to substantially non-inductive circuits.
② Two-pole circuit breaker, or two poles of three-pole circuits.
③ Time constant is 3 milliseconds minimum at 10 kA and 8 milliseconds minimum at–kA.
④ Current limiting per UL 489.
⑤ B2x suffixes cannot be combined with B2x suffixes.

LG 310+ Adjustability Specifications

310+ Settings		LG Frame 250 A	400 A	600 A
I_r = continuous current or long delay pickup (amperes) (All 310+)	I_r			
	A	100	160	250
	B	125	200	300
	C	150	225	315
	D	160	250	350
	E	175	300	400
	F	200	315	450
	G	225	350	500
	H (= I_n)	250	400	600
t_r = long delay time (seconds) (All 310+)	Position 1	2	2	2
	Position 2	4	4	4
	Position 3	7	7	7
	Position 4	10	10	10
	Position 5	12	12	12
	Position 6	15	15	15
	Position 7	20	20	20
	Position 8	24	24	24
I_{sd} (x I_r) = short delay pickup (All 310+)	Position 1	2x	2x	2x
	Position 2	3x	3x	3x
	Position 3	4x	4x	4x
	Position 4	5x	5x	5x
	Position 5	6x	6x	6x
	Position 6	7x	7x	7x
	Position 7	8x	8x	8x
	Position 8	10x	10x	10x
	Position 9	12x	12x	12x
t_{sd} = short delay time I^2t (milliseconds) (LS, LSG)	Fixed	67 at10x	67 at10x	67 at10x
t_{sd} = short delay time flat (milliseconds) ① (LSI, LSIG, ALSI, ALSIG)	Position 1	Inst	Inst	Inst
	Position 2	120	120	120
	Position 3	300	300	300
I_g = gound fault pickup (amperes) (LSG, LSIG, ALSIG)	Position 1	50	80	120
	Position 2	75	120	180
	Position 3	100	160	240
	Position 4	150	240	360
	Position 5	200	320	480
	Position 6	250	400	600
t_g = ground fault delay time (milliseconds) (LSG, LSIG, ALSIG)	Position 1	Inst	Inst	Inst
	Position 2	120	120	120
	Position 3	300	300	300
Independently Adjustable Instantaneous (I_i) setting (ALSI, ALSIG)	Yes	2.5x, 4x, 6x, 7x, 8x, 10x, 12x	2.5x, 4x, 6x, 7x, 8x, 10x, 12x	2.5x, 4x, 6x, 7x, 8x, 10x, 12x
Maintenance Mode (remote) pickup (2.5 x I_n) ② (ALSI, ALSIG)	Fixed	2.5x		

Notes

① 50 ms for ALSI and ALSIG trip units.

② Maintenance Mode is enabled remotely using a 24 Vdc circuit.

Dimensions and Weights

Approximate Dimensions in Inches (mm)

LG-Frame

Number of Poles	Width	Height	Depth
2, 3	5.48 (139.2)	10.13 (257.3)	4.09 (103.9)
4	7.22 (183.4)	10.13 (257.3)	4.09 (103.9)

LG-Frame

Note: TA63IL, T63IL, T632L, TA632L terminals add 1.19 inches (30.2 mm) to line or load side of LG. LTS3K or LTS4K terminal covers add 2.13 inches (54.1 mm) to line or load side of LG.

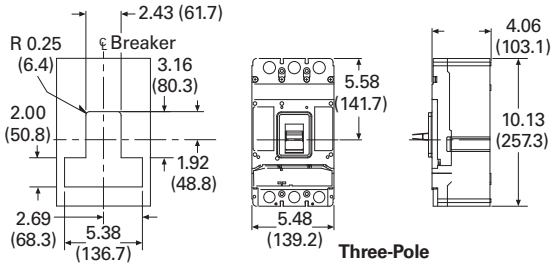

Approximate Shipping Weight in Lbs (kg)

LG-Frame

Breaker Type	Two- and Three-Pole	Four-Pole
LGE, LGS, LGH, LGC, LGU, LGX	16 (7.3)	20 (9.1)

Notes

① DC rating apply to substantially non-inductive circuits.
② Two-pole circuit breaker, or two poles of three-pole circuits.
③ Time constant is 3 milliseconds minimum at 10 kA and 8 milliseconds minimum at–kA.
④ Three-poles in series. 750 Vdc ratings available (four-pole in series, not UL listed). Contact Eaton.
⑤ IEC rating is 300 kA at 240 Vac.
⑥ Current limiting per UL 489.

LG-Frame With Earth Leakage Module

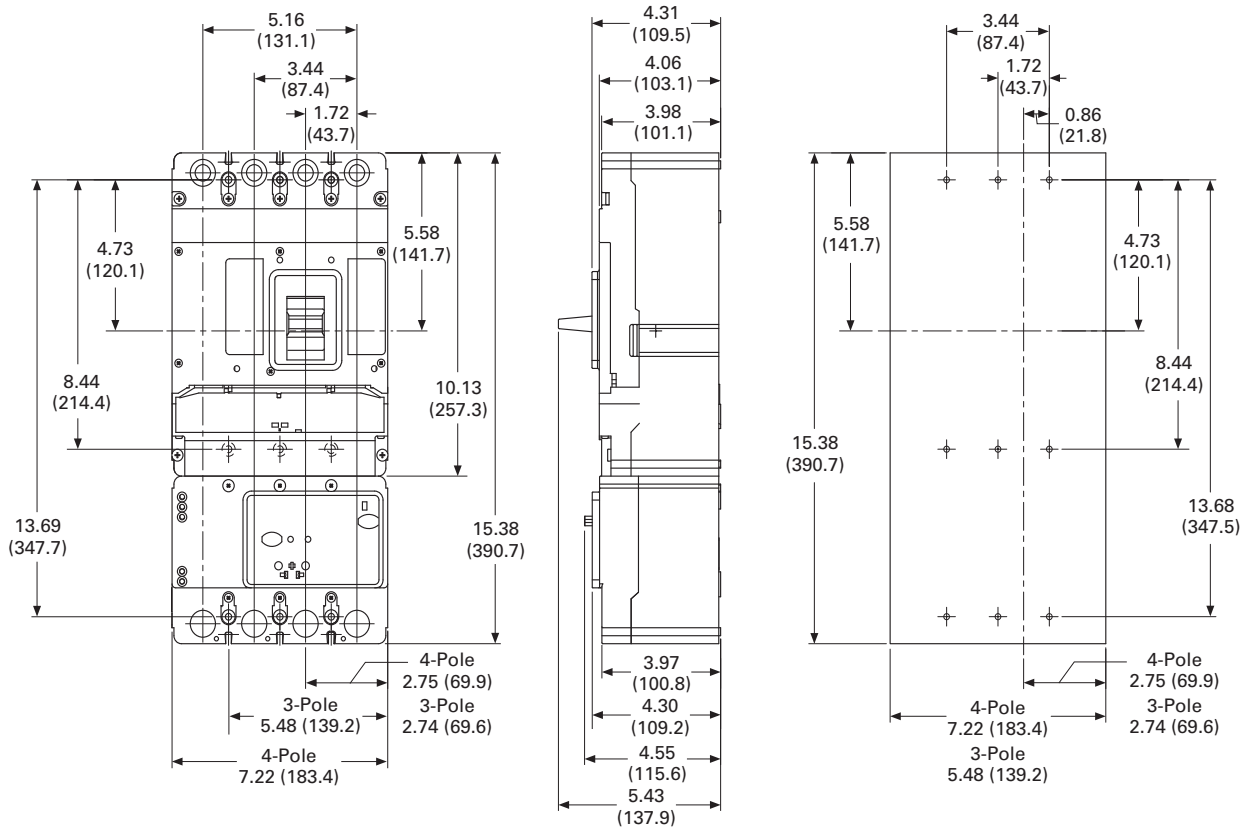

NG-Frame (1200 Ampere)

Contents

Description	*Page*
EG-Frame (15–125 Amperes)	**V4-T2-15**
JG-Frame (63–250 Amperes)	**V4-T2-29**
LG-Frame (250–630 Amperes)	**V4-T2-47**
NG-Frame (320–1200 Amperes)	
Catalog Number Selection	**V4-T2-66**
Product Selection Guide and Ordering Information	**V4-T2-67**
Accessories	**V4-T2-70**
Technical Data and Specifications	**V4-T2-71**
Dimensions and Weights	**V4-T2-73**
RG-Frame (800–2500 Amperes)	**V4-T2-74**
Motor Circuit Protectors (MCP)	**V4-T2-85**
Motor Protector Circuit Breakers (MPCB)	**V4-T2-89**
30 mA Ground Fault (Earth Leakage) Module	**V4-T2-92**
Current Limiting Circuit Breaker Module	**V4-T2-96**
High Instantaneous Circuit Breaker for Selective Coordination	**V4-T2-101**
Special Features and Accessories	**V4-T2-104**
Motor Operators	**V4-T2-112**
Plug-In Blocks	**V4-T2-114**
Drawout Cassette	**V4-T2-115**

NG-Frame (320–1200 Amperes)

Product Description

- All Eaton NG-Frame circuit breakers are suitable for reverse feed use
- All NG-Frame circuit breakers are HACR rated

Catalog Number Selection

This information is presented only as an aid to understanding catalog numbers. It is not to be used to build catalog numbers for circuit breakers or trip units.

NG Circuit Breaker with 310+ Electronic Trip Unit

NG H 3 080 39 ZG E C

Frame
- **NG**

Performance at 480 Vac
- **S** = 50 kAIC
- **H** = 65 kAIC
- **C** = 100 kAIC
- **U** = 150 kAIC ①
- **K** = Molded case switch

Poles
- **3** = Three
- **4** = Four; neutral ② 0% protected
- **7** = Four; neutral ② 100% protected
- **9** = Four; neutral ② 0/60/100% adjustable protection

Amperes
- **080** = 800
- **120** = 1200

Trip Unit
- **33** = 310+ Electronic LS
- **32** = 310+ Electronic LSI
- **35** = 310+ Electronic LSG
- **36** = 310+ Electronic LSIG
- **38** = 310+ Electronic ALSI with maintenance mode
- **39** = 310+ Electronic ALSIG with maintenance mode
- **KS** = Molded case switch

Feature
- **Blank** = No feature
- **B20** = High load alarm
- **B21** = Ground fault alarm, with trip
- **B22** = Ground fault alarm, no trip
- **ZG** = Zone selective interlocking

Terminations ③
- **M** = Metric tapped line/load conductors
- **E** = Imperial tapped line/load conductors

Rating
- **Blank** = 80% rated
- **C** = 100% rated

Notes

① 800 A only.

② Neutral inn left pole on GN; right pole on NG.

③ Breakers do not ship with lugs.

Trip units are factory installable only.

Product Selection Guide and Ordering Information

Type NGS Standard Interrupting Capacity—U_e Max. 690 Vac, 50 kA I_{cu} at 480 Vac or 415 Vac

See 310+ adjustability specifications on **Page V4-T2-72**.

Maximum Continuous Ampere Rating at 40 °C ①②	Number of Poles	Circuit Breaker Frame Including Digitrip Electronic Trip Unit with Imperial Tapped Conductors						
		LS	LSI	LSG	LSIG	ALSI	ALSIG	Neutral CT for LSG and LSIG ③
800	3	NGS308033E	NGS308032E	NGS308035E	NGS308036E	NGS308038E	NGS308039E	NGFCT120
	4	NGS408033E	NGS408032E	NGS408035E ④	NGS408036E ④	NGS408038E	NGS408039E ④	—
	4 ⑤	NGS708033E	NGS708032E	—	—	NGS708038E	—	—
	4 ⑥	NGS908033E	NGS908032E	—	—	NGS908038E	—	—
1200 ⑥	3	NGS312033E	NGS312032E	NGS312035E	NGS312036E	NGS312038E	NGS312039E	NGFCT120
	4	NGS412033E	NGS412032E	NGS412035E ④	NGS412036E ④	—	NGS412039E ④	—
	4 ⑤	NGS712033E	NGS712032E	—	—	NGS712038E	—	—
	4 ⑥	NGS912033E	NGS912032E	—	—	NGS912038E	—	—

Type NGS Standard Interrupting Capacity—U_e Max. 690 Vac, 50 kA I_{cu} at 415 Vac

See 310+ adjustability specifications on **Page V4-T2-72**.

Maximum Continuous Ampere Rating at 40 °C ①②	Number of Poles	Circuit Breaker Frame Including Digitrip Electronic Trip Unit with Metric Tapped Conductors						
		LS	LSI	LSG	LSIG	ALSI	ALSIG	Neutral CT for LSG and LSIG ③
800	3	NGS308033M	NGS308032M	NGS308035M	NGS308036M	NGS308038M	NGS308039M	NGFCT120
	4	NGS408033M	NGS408032M	NGS408035M ④	NGS408036M ④	NGS408038M	NGS408039M ④	—
	4 ⑤	NGS708033M	NGS708032M	—	—	NGS708038M	—	—
	4 ⑥	NGS908033M	NGS908032M	—	—	NGS908038M	—	—
1200	3	NGS312033M	NGS312032M	NGS312035M	NGS312036M	NGS312038M	NGS312039M	NGFCT120
	4	NGS412033M	NGS412032M	NGS412035M ④	NGS412036M ④	—	NGS412039M ④	—
	4 ⑤	NGS712033M	NGS712032M	—	—	NGS712038M	—	—
	4 ⑥	NGS912033M	NGS912032M	—	—	NGS912038M	—	—

Molded Case Switches ⑧⑨

Ampere Rating	U_e Maximum 690 Vac Three-Pole	Catalog Number	Four-Pole	Catalog Number
800	MCS with Imperial line and load terminals	NGK3080KSE	MCS with Imperial line and load terminals	NGK4080KSE
1200	MCS with Imperial line and load terminals	NGK3120KSE	MCS with Imperial line and load terminals	NGK4120KSE
1250	MCS with Imperial line and load terminals	NGK3125KSE	MCS with Imperial line and load terminals	NGK43125KSE

Notes

① For AC use only.
② NG MCCBs are suitable for 40 °C or 50 °C applications. Order suffix V3 to eliminate standard 40 °C labeling.
③ Required for four-wire systems if neutral protection is desired. Sold separately.
④ Neutral 0% protected. NG, neutral in right pole; GN, neutral in left pole.
⑤ Neutral 100% protected (denoted by 7 in digit four); no neutral protection available with LSG or LSIG trip units.
⑥ Neutral 0%/60%/100% adjustable protection (denoted by 9 in digit four).
⑦ Non-UL listed NG 1250 with 1250 ampere trip unit is also available.
⑧ For AC use only. Molded case switch will trip above 14,000 amperes.
⑨ For two-pole applications, use outer poles of three-pole molded case switch.

Type NGH High Interrupting Capacity—U_e Max. 690 Vac, 65 kA I_{cu} at 480 Vac or 415 Vac

See 310+ adjustability specifications on **Page V4-T2-72**.

Maximum Continuous Ampere Rating at 40 °C ①②	Number of Poles	Circuit Breaker Frame Including Digitrip Electronic Trip Unit						
		LS	LSI	LSG	LSIG	ALSI	ALSIG	Neutral CT for LSG and LSIG ③
800	3	NGH308033E	NGH308032E	NGH308035E	NGH308036E	NGH308038E	NGH308039E	NGFCT120
	4	NGH408033E	NGH408032E	NGH408035E ④	NGH408036E ④	NGH408038E	NGH408039E ④	—
	4 ⑤	NGH708033E	NGH708032E	—	—	NGH708038E	—	—
	4 ⑥	NGH908033E	NGH908032E	—	—	NGH908038E	—	—
1200	3	NGH312033E	NGH312032E	NGH312035E	NGH312036E	NGH312038E	NGH312039E	NGFCT120
	4	NGH412033E	NGH412032E	NGH412035E ④	NGH412036E ④	—	NGH412039E ④	—
	4 ⑤	NGH712033E	NGH712032E	—	—	NGH712038E	—	—
	4 ⑥	NGH912033E	NGH912032E	—	—	NGH912038E	—	—

Type NGC Very High Capacity—U_e Max. 690 Vac, 100 kA I_{cu} at 480 Vac or 415 Vac

See 310+ adjustability specifications on **Page V4-T2-72**.

Maximum Continuous Ampere Rating at 40 °C ①②	Number of Poles	Circuit Breaker Frame Including Digitrip Electronic Trip Unit						
		LS	LSI	LSG	LSIG	ALSI	ALSIG	Neutral CT for LSG and LSIG ③
800	3	NGC308033E	NGC308032E	NGC308035E	NGC308036E	NGC308038E	NGC308039E	NGFCT120
	4	NGC408033E	NGC408032E	NGC408035E ④	NGC408036E ④	NGC408038E	NGC408039E ④	—
	4 ⑤	NGC708033E	NGC708032E	—	—	NGC708038E	—	—
	4 ⑥	NGC908033E	NGC908032E	—	—	NGC908038E	—	—
1200	3	NGC312033E	NGC312032E	NGC312035E	NGC312036E	NGC312038E	NGC312039E	NGFCT120
	4	NGC412033E	NGC412032E	NGC412035E ④	NGC412036E ④	—	NGC412039E ④	—
	4 ⑤	NGC712033E	NGC712032E	—	—	NGC712038E	—	—
	4 ⑥	NGC912033E	NGC912032E	—	—	NGC912038E	—	—

Notes

① For AC use only.
② NG MCCBs are suitable for 40 °C or 50 °C applications. Order suffix V3 to eliminate standard 40 °C labeling.
③ Required for four-wire systems if neutral protection is desired. Sold separately.
④ Neutral 0% protected. NG, neutral in right pole; GN, neutral in left pole.
⑤ Neutral 100% protected (denoted by 7 in digit four); no neutral protection available with LSG or LSIG trip units.
⑥ Neutral 0%/60%/100% adjustable protection (denoted by 9 in digit four).

Accessories Selection Guide and Ordering Information

Line and Load Terminals

N-Frame circuit breakers do not include terminals as standard. When copper or Cu/Al terminals are required, order by catalog number.

Line and Load Terminals

Maximum Breaker Amperes	Terminal Body Material	Wire Type	AWG Wire (Number of Conductors)	AWG Wire Catalog Number ①	Metric Wire Range mm^2	Metric Catalog Number ①
Standard Cu/Al Pressure Terminals						
700	Aluminum	Cu/Al	1–500 (2)	**TA700NB1**	50–240	**TA700NB1M**
1000	Aluminum	Cu/Al	3/0–400 (3)	**TA1000NB1**	95–185	**TA1000NB1M**
1200	Aluminum	Cu/Al	4/0–500 (4)	**TA1200NB1**	120–240	**TA1200NB1M**
1200	Aluminum	Cu/Al	500–750 (3)	**TA1201NB1**	300–400	**TA1201NB1M**
Optional Copper and Cu/Al Pressure Type Terminals						
700	Copper	Cu	2/0–500 (2)	**T700NB1**	70–240	**T700NB1M**
1000	Copper	Cu	3/0–500 (3)	**T1000NB1**	95–240	**T1000NB1M**
1200	Copper	Cu	3/0–400 (4)	**T1200NB3**	95–185	**T1200NB3M**

310+ Electronic Trip Unit Accessories

Description	Catalog Number
Electronic portable test kit	**MTST230V**
Trip unit tamper protection wire seal	**5108A03H01**
External neutral sensor (1200 A) ②	**NGFCT120**
External neutral sensor (800 A) ②	**NGFCT120**
Breaker-mount cause-of-trip indication	**TRIP-LED**
Breaker-mount ammeter module	**DIGIVIEW**
Remote-mount ammeter module	**DIGIVIEWR06**

Base Mounting Hardware

Base mounting hardware is included with a circuit breaker or molded case switch.

Base Mounting Hardware ③

Number of Poles	Description	Catalog Number
Three- and four-pole	Imperial hardware: 0.3125–18 x 1.25 pan-head steel screws and lock washers	**BMH5**
Three- and four-pole	Metric hardware: M8 pan-head steel screws and lock washers	**BMH5M**

Terminal Shield

Terminal Shield

Description	Catalog Number
Three-pole terminal shield	**NTS3K**

Conductor Extension Kit

Conductor Extension Kit ④

Description	Catalog Number
Three-pole both ends Metric	**5104A24G04**
Three-pole both ends English	**5104A24G02**

Keeper Nut

Not required on NG-Frame. Terminals are threaded.

Handle Extension

Included with breaker. Additional handle extensions are available.

Handle Extension

Description	Catalog Number
Single handle extension	**HEX5**

Interphase Barriers

The interphase barriers provide additional electrical clearance between circuit breaker poles for special termination applications. Barriers are high dielectric insulating plates that are installed in the molded slots between the terminals. (Field installation only.)

Interphase Barriers

Description	Catalog Number
Interphase barriers ④	**IPB5**

Notes

① Single terminals individually packed.
② Required for four-wire systems if neutral protection is desired. Sold separately.
③ Metric hardware included with breaker.
④ Included as standard on 100% rated 1200 A breakers only.

Accessories

Allowable Accessory Combinations

Different combinations of accessories can be supplied, depending on the types of accessories and the number of poles in the circuit breaker.

NG-Frame Accessories

Description	Reference Page	Three-Pole Left	Three-Pole Center	Three-Pole Right	Four-Pole Left	Four-Pole Center	Four-Pole Right	Four-Pole Neu.
Internal Accessories (Only One Internal Accessory Per Pole)								
Alarm lockout (Make/Break)	V4-T2-109	●		■	●		■	
Auxiliary switch (1A, 1B)	V4-T2-109	●		■	●		■	
Auxiliary switch (2A, 2B)	V4-T2-109	●		■	●		■	
Auxiliary switch and alarm switch combination	V4-T2-109	●		■	●		■	
Shunt trip—standard	V4-T2-109	■			■			
Undervoltage release mechanism	V4-T2-110	■			■			
External Accessories								
Base mounting hardware	V4-T2-69	●	●	●	●	●	●	●
Interphase barriers	V4-T2-69	●	●	●	●	●	●	●
Non-padlockable handle block	V4-T2-107		■			■		
Padlockable handle lock hasp	V4-T2-107	❑		❑	❑		❑	
Key interlock kit	V4-T2-107	❑		❑	❑		❑	
Sliding bar interlock—requires two breakers	V4-T2-107	●	●	●				
Electrical operator	V4-T2-107	●	●	●	●	●	●	●
Plug-in adapters	V4-T2-114	●	●	●	●	●	●	●
Rear connecting studs	V4-T2-107	●	●	●	●	●	●	●
Handle mechanisms	V4-T2-420	●	●	●	●	●	●	●
Drawout cassette	V4-T2-115	●	●	●	●	●	●	●
Handle extension	V4-T2-69	●	●	●	●	●	●	●
Ammeter/cause of trip display	V4-T2-106	●	●	●	●	●	●	●
Cause of trip LED module	V4-T2-106	●	●	●	●	●	●	●
Digitrip 310+ test kit	V4-T2-106	●	●	●	●	●	●	●
Modifications (Refer to Eaton)								
Moisture fungus treatment	V4-T2-105	●	●	●	●	●	●	●
Freeze-tested circuit breakers	—	●	●	●	●	●	●	●
Marine/Naval application, UL 489 Supplement SA and SB	①	●	●	●	●	●	●	●

Legend

■ Applicable in indicated pole position
❑ May be mounted on left or right pole—not both
● Accessory available/modification available

Note

① Contact Eaton.

Technical Data and Specifications

Interrupting Capacity Ratings

UL 489/IEC 60947-2 Interrupting Capacity Ratings ①

			Interrupting Capacity (kA Symmetrical Amperes)							
			Volts AC (50/60 Hz)							
Circuit Breaker Type	Number of Poles	240 (UL)	220–240		380–415		480	600	690	
			I_{cu}	I_{cs}	I_{cu}	I_{cs}			I_{cu}	I_{cs}
NGS ①	2, 3, 4	65	85	85	50	50	50	25	20	10
NGH	2, 3, 4	100	100	100	70	50	65	35	25	13
NGC	2, 3, 4	200	200	100	100	50	100	65	35	18

NG-Frame Digitrip Specifications

NG 310+ Specifications

Description	Specification
Trip Unit Type	Digitrip RMS 310+
Breaker Type	
Frame designation	NG
Frames available	800 A, 1200 A
Continuous current range (A)	320–1200A
Ground fault pickup (A)	160–1200A
Interrupting capacities at 480 Vac (kAIC)	35, 65, 100, 150
100% rated	Yes
Protection	
Ordering options	LS, LSI, LSG, LSIG, ALSI, ALSIG
Arcflash reduction maintenance system (or maintenance mode)	Yes
Interchangeable trip unit	No
High load alarm (suffix B20) ②	Yes
Ground fault alarm with trip (suffix B21) ②	Yes
Ground fault alarm, no trip (suffix B22) ②	Yes
Zone selective interlocking (suffix ZG)	LSI, LSIG, ALSI, ALSIG
Cause of trip indication	Yes
Thru-cover accessories	No

Notes

① 1600 amperes is not a UL or CSA listed rating. 1200 amperes is the maximum UL and CSA rating for NG.

② B2x suffixes cannot be combined with B2x suffixes.

NG 310+ Adjustability Specifications

310+ Settings		NG Frame 800 A	NG Frame 1200 A
I_r = continuous current or long delay pickup (amperes) (All 310+)	I_r		
	A	320	500
	B	400	600
	C	450	630
	D	500	700
	E	600	800
	F	630	900
	G	700	1000
	H (= I_n)	800	1200
t_r = long delay time (seconds) (All 310+)	Position 1	2	2
	Position 2	4	4
	Position 3	6	7
	Position 4	8	10
	Position 5	10	12
	Position 6	12	15
	Position 7	14	20
	Position 8	14	24
I_{sd} (x I_r) = short delay pickup (All 310+)	Position 1	2x	2x
	Position 2	3x	3x
	Position 3	4x	4x
	Position 4	5x	5x
	Position 5	6x	6x
	Position 6	7x	7x
	Position 7	8x	8x
	Position 8	9x	9x
	Position 9	9x	9x
t_{sd} = short delay time I^2t (milliseconds) (LS, LSG)	Fixed	67 at10x	67 at10x
t_{sd} = short delay time flat (milliseconds) (LSI, LSIG, ALSI, ALSIG) ①	Position 1	Inst	Inst
	Position 2	120	120
	Position 3	300	300
I_g = gound fault pickup (amperes) (LSG, LSIG, ALSIG)	Position 1	160	240
	Position 2	240	360
	Position 3	320	480
	Position 4	480	720
	Position 5	640	960
	Position 6	800	1200
t_g = ground fault delay time (milliseconds) (LSG, LSIG, ALSIG)	Position 1	Inst	Inst
	Position 2	120	120
	Position 3	300	300
Independently Adjustable Instantaneous (I_i) setting (ALSI, ALSIG)	Yes	2.5x, 4x, 6x, 7x, 8x, 10x, 18x	2.5x, 4x, 6x, 7x, 8x, 10x, 12x
Maintenance Mode (remote) pickup (2.5 x I_n) (ALSI, ALSIG) ②	Fixed	2.5x	2.5x

Notes

① 50 ms for ALSI and ALSIG trip units.

② Maintenance Mode is enabled remotely using a 24 Vdc circuit.

Dimensions and Weights

Approximate Dimensions in Inches (mm)

NG-Frame

Number of Poles	Width	Height	Depth
3	8.25 (209.6)	16.00 (406.4)	5.50 (139.7)
4	11.13 (282.6)	16.00 (406.4)	5.50 (139.7)

NG-Frame

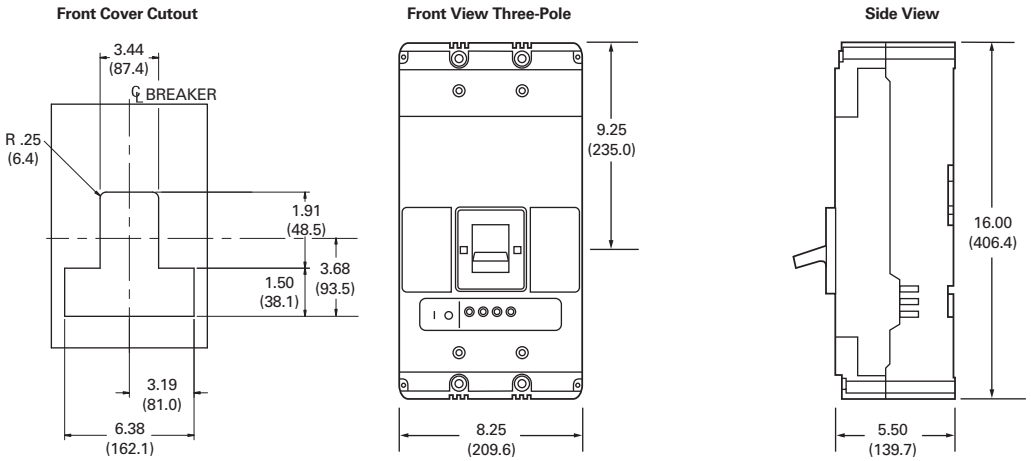

Approximate Shipping Weight in Lbs (kg)

NG-Frame

Breaker Type	Complete Breaker Three-Pole	Four-Pole
NGS, NGH, NGC	45 (20.4)	58 (26.3)

RG-Frame (800–2500 Amperes)

Contents

Description	*Page*
EG-Frame (15–125 Amperes)	**V4-T2-15**
JG-Frame (63–250 Amperes)	**V4-T2-29**
LG-Frame (250–630 Amperes)	**V4-T2-47**
NG-Frame (320–1200 Amperes)	**V4-T2-65**
RG-Frame (800–2500 Amperes)	
Catalog Number Selection	**V4-T2-75**
Product Selection	**V4-T2-76**
Accessories	**V4-T2-81**
Technical Data and Specifications	**V4-T2-82**
Dimensions and Weights	**V4-T2-84**
Motor Circuit Protectors (MCP)	**V4-T2-85**
Motor Protector Circuit Breakers (MPCB)	**V4-T2-89**
30 mA Ground Fault (Earth Leakage) Module	**V4-T2-92**
Current Limiting Circuit Breaker Module	**V4-T2-96**
High Instantaneous Circuit Breaker for Selective Coordination	**V4-T2-101**
Special Features and Accessories	**V4-T2-104**
Motor Operators	**V4-T2-112**
Plug-In Blocks	**V4-T2-114**
Drawout Cassette	**V4-T2-115**

RG-Frame (800–2500 Amperes)

Product Description

- Eaton's RG-Frame circuit breakers are available as frame (which includes trip unit), rating plug and terminals
- All R-Frame circuit breakers are suitable for reverse feed use

Catalog Number Selection

This information is presented only as an aid to understanding catalog numbers.
It is not to be used to build catalog numbers for circuit breakers or trip units.

70 kA at 415 Vac and 65 kA at 480 Vac

RG Circuit Breaker With 310+ Electronic Trip Unit

RG H 3 250 39 ZG E C

Frame
- **RG**

Performance at 480 Vac
- **H** = 65 kAIC
- **C** = 100 kAIC
- **K** = Molded case switch

Poles
- **3** = Three
- **4** = Four

Amperes
- **160** = 1600
- **200** = 2000
- **250** = 2500

Trip Unit
- **33** = 310+ Electronic LS
- **32** = 310+ Electronic LSI
- **35** = 310+ Electronic LSG
- **36** = 310+ Electronic LSIG
- **38** = 310+ Electronic LSI w/ Maintenance Mode
- **39** = 310+ Electronic LSIG w/ Maintenance Mode
- **KS** = Molded case switch

Feature
- **Blank** = No feature
- **B20** = High load alarm
- **B21** = Ground fault alarm, with trip
- **B22** = Ground fault alarm, no trip
- **ZG** = Zone selective interlocking

Terminations
- **M** = Metric tapped line/load conductors
- **E** = Imperial tapped line/load conductors
- **W** = No terminals

Rating
- **Blank** = 80% rated
- **C** = 100% rated (except 2500 A)

RG 310+ Electronic Trip Unit

RT 3 250 39 ZG

Type
- **RT**

Poles
- **3** = Three

Amperes
- **160** = 1600
- **200** = 2000
- **250** = 2500

Trip Unit
- **33** = 310+ Electronic LS
- **32** = 310+ Electronic LSI
- **35** = 310+ Electronic LSG
- **36** = 310+ Electronic LSIG
- **38** = 310+ Electronic LSI w/ Maintenance Mode
- **39** = 310+ Electronic LSIG w/ Maintenance Mode

Feature
- **Blank** = No feature
- **B20** = High load alarm
- **B21** = Ground fault alarm, with trip
- **B22** = Ground fault alarm, no trip
- **ZG** = Zone selective interlocking

RG Circuit Breaker with OPTIM 610 and 910 Electronic Trip Unit

RGH 3 16 T92 W

Type
- **RGH** 65K
- **RGC** 100K

Poles
- **3** = Three
- **4** = Four

Amperes
- **16** = 1600
- **20** = 2000
- **25** = 2500

Trip Function

Digitrip 610
- **T61** = LI
- **T62** = LSI
- **T63** = LS
- **T64** = LIG
- **T65** = LSG
- **T66** = LSIG

Digitrip 910
- **T91** = LI
- **T92** = LSI
- **T93** = LS
- **T94** = LIG
- **T95** = LSG
- **T96** = LSIG

Modification Suffix
- **R** = Ground fault remote RES trip
- **E** = 100% protection (new design 310) RES trip unit
- **P** = 100% prot. neut. 4P RES trip unit
- **V3** = Electronic trip without ambient temperature marked on trip unit
- **W** = w/o terms
- **K** = Molded case switch

Product Selection

70 kA at 415 Vac and 65 kA at 480 Vac

Type RGH with Digitrip 310+ High Interrupting Capacity—U_e Maximum 690 Vac, 70 kA I_{cu} at 415 Vac

See 310+ adjustability specifications on **Page V4-T2-83**.

Maximum Continuous Ampere Rating at 40 °C ①	Number of Poles	Circuit Breaker Frame Including Digitrip RMS 310+ Electronic Trip Unit with Adjustable Rating Plugs—Catalog Number ②						
		LS	LSI	LSG ③	LSIG ③	ALSI	ALSIG	Neutral CT for LSG and LSIG ④
1600 ①	3	**RGH316033E**	**RGH316032E**	**RGH316035E**	**RGH316036E**	**RGH316038E**	**RGH316039E**	**RGFCT160A**
2000	3	**RGH320033E**	**RGH320032E**	**RGH320035E**	**RGH320036E**	**RGH320038E**	**RGH320039E**	**RGFCT200A**
2500	3	**RGH325033E**	**RGH325032E**	**RGH325035E**	**RGH325036E**	**RGH325038E**	**RGH325039E**	**RGFCT250A**

100 kA at Both 415 Vac and 480 Vac

Type RGH with Digitrip 310+ High Interrupting Capacity—U_e Maximum 690 Vac, 70 kA I_{cu} at 415 Vac

See 310+ adjustability specifications on **Page V4-T2-83**.

Maximum Continuous Ampere Rating at 40 °C ①	Number of Poles	Circuit Breaker Frame Including Digitrip RMS 310+ Electronic Trip Unit with Adjustable Rating Plugs—Catalog Number ②					
		LS	LSI	LSG ③⑤	LSIG ③⑤	ALSI	ALSIG ③⑤
1600 ①	4 ⑥	**RGH416033E**	**RGH416032E**	—	—	**RGH416038E**	—
2000	4 ⑥	**RGH420033E**	**RGH420032E**	—	—	**RGH420038E**	—
2500	4 ⑥	**RGH425033E**	**RGH425032E**	—	—	**RGH425038E**	—

Notes

① For SCR application, use 2000 ampere frame.
② Order terminals separately. Mounting hardware not included.
③ Ground fault equipped trip units available with remote indicating panel. Add "R" to catalog number, for example, "**RGH316035RW**."
④ Required for four-wire systems if neutral protection is desired. Sold separately.
⑤ No neutral protection available on four-pole breakers with LSG or LSIG trip units.
⑥ Unprotected left pole neutral. Add "P" to catalog number for 100% protected left pole neutral, add "E" for 60% protected, for example, "**RGH416033PW**," "**RGH416033EW**."

RG MCCBs have English threading on line and load conductors. Use suffix "M" for metric threading.

100 kA at Both 415 Vac and 480 Vac

Type RGC with Digitrip 310+ Very High Interrupting Capacity—U_e Maximum 690 Vac, 100 kA I_{cu} at 415 Vac

See 310+ adjustability specifications on **Page V4-T2-83**.

Maximum Continuous Ampere Rating at 40 °C ①	Number of Poles	Circuit Breaker Frame Including Digitrip RMS 310+ Electronic Trip Unit with Adjustable Rating Plugs—Catalog Number ②						
		LS	LSI	LSG ③	LSIG ③	ALSI	ALSIG	Neutral CT for LSG and LSIG ④
1600 ①	3	**RGC316033E**	**RGC316032E**	**RGC316035E**	**RGC316036E**	**RGC316038E**	**RGC316039E**	**RGFCT160A**
2000	3	**RGC320033E**	**RGC320032E**	**RGC320035E**	**RGC320036E**	**RGC320038E**	**RGC320039E**	**RGFCT200A**
2500	3	**RGC325033E**	**RGC325032E**	**RGC325035E**	**RGC325036E**	**RGC325038E**	**RGC325039E**	**RGFCT250A**

Type RGC with Digitrip 310+ Very High Interrupting Capacity—U_e Maximum 690 Vac, 100 kA I_{cu} at 415 Vac, continued

See 310+ adjustability specifications on **Page V4-T2-83**.

Maximum Continuous Ampere Rating at 40 °C ①	Number of Poles	Circuit Breaker Frame Including Digitrip RMS 310+ Electronic Trip Unit with Adjustable Rating Plugs—Catalog Number ②					
		LS	LSI	LSG ③⑤	LSIG ③⑤	ALSI	ALSIG ③⑤
1600 ①	4 ⑥	**RGC416033E**	**RGC416032E**	—	—	**RGC416038E**	—
2000	4 ⑥	**RGC420033E**	**RGC420032E**	—	—	**RGC420038E**	—
2500	4 ⑥	**RGC425033E**	**RGC425032E**	—	—	**RGC425038E**	—

Molded Case Switches ⑦

Ampere Rating	Number of Poles	Catalog Number
1600	3	**RGK3160KSE**
2000	3	**RGK3200KSE**
1600	4	**RGK4160KSE**
2000	4	**RGK4200KSE**

Notes

① For SCR application, use 2000 ampere frame.
② Order terminals separately. Mounting hardware not included.
③ Ground fault equipped trip units available with remote indicating panel. Add "R" to catalog number, for example, "**RGH316035RW**."
④ Required for four-wire systems if neutral protection is desired. Sold separately.
⑤ No neutral protection available on four-pole breakers with LSG or LSIG trip units.
⑥ Unprotected left pole neutral. Add "P" to catalog number for 100% protected left pole neutral, add "E" for 60% protected, for example, "**RGH416033PW**," "**RGH416033EW**."
⑦ Molded case switch will trip above 17,500 amperes.

RG MCCBs have English threading on line and load conductors. Use suffix "M" for metric threading.

Type RG with Digitrip 610 and 910

Maximum Continuous Ampere Rating at 40 °C	Number of Poles	Circuit Breaker Frame Including Digitrip RMS 610 and 910 Electronic Trip Unit with Rating Plugs Order as Individual Component—Catalog Number ① L – Adjustable Long Delay Pickup (I_r) with Adjustable Long Delay Time S –Adjustable Short Delay Pickup with Adjustable Short Delay Time (I^2t or Flat Response) I – Adjustable Instantaneous Pickup G –Adjustable Ground Fault Pickup with Adjustable Ground Fault Time Delay (I^2t or Flat Response)						Digitrip RMS Interchangeable Rating Plug (Order as Individual Component) Fixed Rating Plug	
		LI	LS	LSI	LIG	LSG	LSIG		
Long Delay Pickup		0.5–1.0 x I_n	0.5–I.0$_n$	0.5–1.0 x I_n	0.5–1.0 x I_n	0.5–1.0 x I_n	0.5–1.0 x I_n		
Long Delay Time		2–24 Seconds	2–24 Seconds	2–24 Seconds	2–24 Seconds	2–24 Seconds	2–24 Seconds		
Short Time Range		2–6 x I_r	2–6 x I_r	2–6 x I_r	2–6 x I_r	2–6 x I_r	2–6 x I_r		
Short Time Delay		—	100–500 ms	100–500 ms	—	100–500 ms	100–500 ms		
Instantaneous		2–6 x M1 and M2	—	2–6 x M1 and M2	2–6 x M1 and M2	—	2–6 x M1 and M2		
Ground Fault Pickup		—	—	—	0.25–1.0 x I_n ②	0.25–1.0 x I_n ②	0.25–1.0 x I_n ②	Ampere Rating	Catalog Number
Ground Fault Delay		—	—	—	100–500 ms	100–500 ms	100–500 ms		
Type RGH with Digitrip 610 High Interrupting Capacity—U_e Max. 690 Vac, 70 kA I_{cu} at 415 Vac									
1600	3	RGH316T61WP44	RGH316T63WP44	RGH316T62WP44	RGH316T64WP44	RGH316T65WP44	RGH316T66WP44	800	RP6R16A080
								1000	RP6R16A100
								1200	RP6R16A120
								1250	RP6R16A125
		Includes 1600 A rating plug						1600	RP6R16A160
2000	3	RGH320T61WP49	RGH320T63WP49	RGH320T62WP49	RGH320T64WP49	RGH320T65WP49	RGH320T66WP49	1000	RP6R20A100
								1200	RP6R20A120
								1250	RP6R20A125
								1600	RP6R20A160
		Includes 2000 A rating plug						2000	RP6R20A200
2500	3	RGH325T61WP53	RGH325T63WP53	RGH325T62WP53	RGH325T64WP53	RGH325T65WP53	RGH325T66WP53	1600	RP6R25A160
								2000	RP6R25A200
								2500	RP6R25A250
Type RGC with Digitrip 610 Very High Interrupting Capacity—U_e Max. 690 Vac, 100 kA I_{cu} at 415 Vac									
1600	3	RGC316T61WP44	RGC316T63WP44	RGC316T62WP44	RGC316T64WP44	RGC316T65WP44	RGC316T66WP44	800	RP6R16A080
								1000	RP6R16A100
								1200	RP6R16A120
								1250	RP6R16A125
		Includes 1600 A rating plug						1600	RP6R16A160
2000	3	RGC320T61WP49	RGC320T63WP49	RGC320T62WP49	RGC320T64WP49	RGC320T65WP49	RGC320T66WP49	1000	RP6R20A100
								1200	RP6R20A120
								1250	RP6R20A125
								1600	RP6R20A160
		Includes 2000 A rating plug						2000	RP6R20A200
2500	3	RGC325T61WP53	RGC325T63WP53	RGC325T62WP53	RGC325T64WP53	RGC325T65WP53	RGC325T66WP53	1600	RP6R25A160
								2000	RP6R25A200
		Includes 2500 A rating plug						2500	RP6R25A250

Notes

① Order terminals separately. Mounting hardware not included.

② Not to exceed 1200 ampere ground fault pickup.

RG MCCBs have metric threading on line and load conductors. Use RD MCCBs if imperial threading is required.

Type RG with Digitrip 610 and 910, continued

Maximum Continuous Ampere Rating at 40 °C	Number of Poles	Circuit Breaker Frame Including Digitrip RMS 610 and 910 Electronic Trip Unit with Rating Plugs Order as Individual Component—Catalog Number ① L – Adjustable Long Delay Pickup (I_r) with Adjustable Long Delay Time S –Adjustable Short Delay Pickup with Adjustable Short Delay Time (I^2t or Flat Response) I – Adjustable Instantaneous Pickup G –Adjustable Ground Fault Pickup with Adjustable Ground Fault Time Delay (I^2t or Flat Response)						Digitrip RMS Interchangeable Rating Plug (Order as Individual Component) Fixed Rating Plug	
		LI	LS	LSI	LIG	LSG	LSIG		
Long Delay Pickup		0.5–1.0 x I_n	0.5–I.0$_n$	0.5–1.0 x I_n	0.5–1.0 x I_n	0.5–1.0 x I_n	0.5–1.0 x I_n		
Long Delay Time		2–24 Seconds	2–24 Seconds	2–24 Seconds	2–24 Seconds	2–24 Seconds	2–24 Seconds		
Short Time Range		2–6 x I_r	2–6 x I_r	2–6 x I_r	2–6 x I_r	2–6 x I_r	2–6 x I_r		
Short Time Delay		—	100–500 ms	100–500 ms	—	100–500 ms	100–500 ms		
Instantaneous		2–6 x M1 and M2	—	2–6 x M1 and M2	2–6 x M1 and M2	—	2–6 x M1 and M2		
Ground Fault Pickup		—	—	—	0.25–1.0 x In ②	0.25–1.0 x In ②	0.25–1.0 x In ②	Ampere Rating	Catalog Number
Ground Fault Delay		—	—	—	100–500 ms	100–500 ms	100–500 ms		
Type RGH with Digitrip 910 High Interrupting Capacity—U_e Max. 690 Vac, 70 kA I_{cu} at 415 Vac									
1600	3	**RGH316T91WP44**	**RGH316T93WP44**	**RGH316T92WP44**	**RGH316T94WP44**	**RGH316T95WP44**	**RGH316T96WP44**	800	**RP6R16A080**
								1000	**RP6R16A100**
								1200	**RP6R16A120**
								1250	**RP6R16A125**
		Includes 1600 A rating plug						1600	**RP6R16A160**
2000	3	**RGH320T91WP49**	**RGH320T93WP49**	**RGH320T92WP49**	**RGH320T94WP49**	**RGH320T95WP49**	**RGH320T96WP49**	1000	**RP6R20A100**
								1200	**RP6R20A120**
								1250	**RP6R20A125**
								1600	**RP6R20A160**
		Includes 2000 A rating plug						2000	**RP6R20A200**
2500	3	**RGH325T91WP53**	**RGH325T93WP53**	**RGH325T92WP53**	**RGH325T94WP53**	**RGH325T95WP53**	**RGH325T96WP53**	1600	**RP6R25A160**
								2000	**RP6R25A200**
		Includes 2500 A rating plug						2500	**RP6R25A250**
Type RGC with Digitrip 910 Very High Interrupting Capacity—U_e Max. 690 Vac, 100 kA I_{cu} at 415 Vac									
1600	3	**RGC316T91WP44**	**RGC316T93WP44**	**RGC316T92WP44**	**RGC316T94WP44**	**RGC316T95WP44**	**RGC316T96WP44**	800	**RP6R16A080**
								1000	**RP6R16A100**
								1200	**RP6R16A120**
								1250	**RP6R16A125**
		Includes 1600 A rating plug						1600	**RP6R16A160**
2000	3	**RGC320T91WP49**	**RGC320T93WP49**	**RGC320T92WP49**	**RGC320T94WP49**	**RGC320T95WP49**	**RGC320T96WP49**	1000	**RP6R20A100**
								1200	**RP6R20A120**
								1250	**RP6R20A125**
								1600	**RP6R20A160**
		Includes 2000 A rating plug						2000	**RP6R20A200**
2500	3	**RGC325T91WP53**	**RGC325T93WP53**	**RGC325T92WP53**	**RGC325T94WP53**	**RGC325T95WP53**	**RGC25T96WP53**	1600	**RP6R25A160**
								2000	**RP6R25A200**
		Includes 2500 A rating plug						2500	**RP6R25A250**

Notes

① Order terminals separately. Mounting hardware not included.

② Not to exceed 1200 ampere ground fault pickup.

RG MCCBs have metric threading on line and load conductors. Use RD MCCBs if imperial threading is required.

Accessories Selection Guide and Ordering Information

Line and Load Terminals

R-Frame circuit breakers use Cu/Al terminals as standard and copper only terminals as an option. Specify if factory installation is required. Must have terminals for 100% rated and or freeze testing requirements.

Line and Load Terminals

Maximum Breaker Amperes	Terminal Body Material	Wire Type	Hardware	AWG/kcmil Wire Range/ Number of Conductors	Metric Wire Range mm²	Catalog Number
Wire Terminals						
1600	Aluminum	Cu/Al	Metric	500–1000 (4)	300–500	**TA1600RDM** ①
1600	Copper	Cu	Metric	1–600 (4)	50–300	**T1600RDM** ①
2000	Aluminum	Cu/Al	Metric	2–600 (6)	35–300	**TA2000RDM** ②
Rear Connectors						
2000	Copper	—	Metric	—	—	**B2016RDM** ①
2000	Copper	—	Metric	—	—	**B2016RDLM** ①
2500	Copper	—	Metric	—	—	**B2500RDM** ①

RG Rear Connector Exploded View

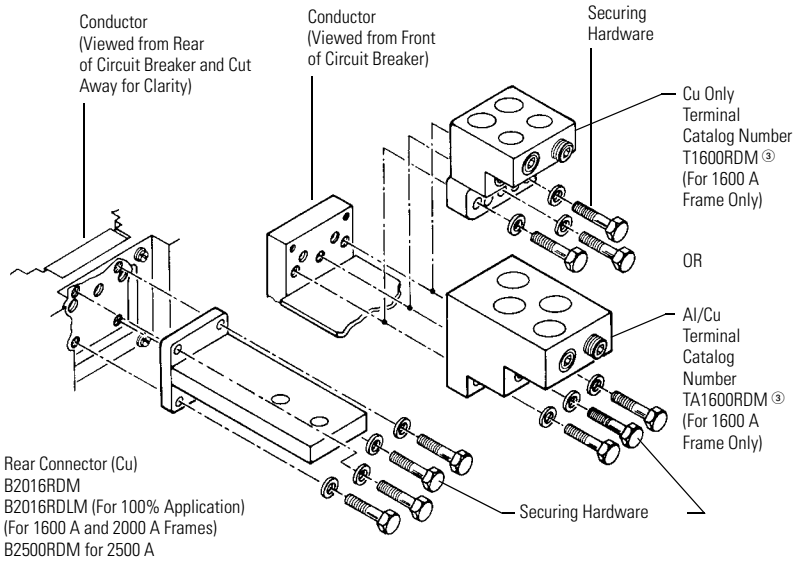

TA2000RD Wire Terminal

Note: Order one TA2000RDM kit per three poles. Catalog number includes bus connection, terminals and hardware for either line side or load side of three-pole breaker.

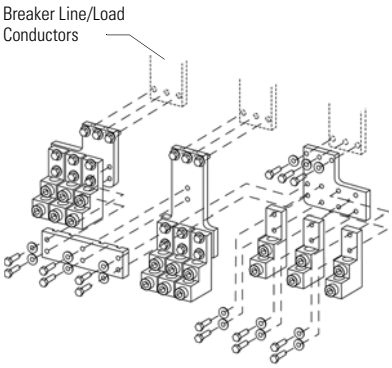

Base Mounting Hardware

Supplied by customer.

Handle Extension

Included with breaker. Additional handle extensions are available.

Handle Extension

Description	Catalog Number
Single handle extension	**HEX6**

Wire Seal

The wire seal can be used to secure the cover on the trip unit to prevent adjustments after settings are confirmed.

Wire Seal

Description	Catalog Number
Wire seal	**5108A03H01**

Notes

① Order one per pole—single terminals individually packed.

② Order one TA2000RD kit per three poles. Catalog number includes bus connection, terminals and hardware for either line side or load side of three-pole breaker.

③ For use with 2500 A Frame. Do not order separately unless for replacement purposes. Included in breaker carton when 2500 A frame is ordered.

RG MCCBs have metric threading on line and load conductors. Use RD MCCBs if imperial threading is required.

Accessories

Allowable Accessory Combinations

Different combinations of accessories can be supplied, depending on the types of accessories and the number of poles in the circuit breaker.

RG-Frame Accessories

Description	Reference Page	Three-Pole Left	Three-Pole Center	Three-Pole Right	Four-Pole Left	Four-Pole Center	Four-Pole Right	Four-Pole Neutral
Internal Accessories (Only One Internal Accessory Per Pole)								
Alarm lockout (Make/Break)	**V4-T2-109**			■			■	
Auxiliary switch (1A, 1B)	**V4-T2-109**			■			■	
Auxiliary switch (2A, 2B)	**V4-T2-109**			■			■	
Auxiliary switch and alarm switch combination	**V4-T2-109**			■			■	
Shunt trip—standard	**V4-T2-109**			●			●	
Undervoltage release mechanism	**V4-T2-110**			●			●	
External Accessories								
Base mounting hardware	**V4-T2-80**	●	●	●	●	●	●	●
Padlockable handle lock hasp	**V4-T2-107**	❑		❑	❑		❑	
Key interlock kit	**V4-T2-107**	❑		❑	❑		❑	
Electrical operator	**V4-T2-107**	●	●	●	●	●	●	●
Handle mechanisms	**V4-T2-420**	●	●	●	●	●	●	●
Handle extension	**V4-T2-80**	●	●	●	●	●	●	●
Digitrip 310+ test kit	**V4-T2-106**	●	●	●	●	●	●	●
Modifications (Refer to Eaton)								
Moisture fungus treatment	**V4-T2-105**	●	●	●	●	●	●	●
Freeze-tested circuit breakers	—	●	●	●	●	●	●	●
Marine/naval application, UL 489 Supplement SA and SB	①	●	●	●	●	●	●	●

Legend

■ Applicable in indicated pole position
❑ May be mounted on left or right pole—not both
● Accessory available/modification available

310+ Electronic Trip Unit Accessories

Description	Catalog Number
Electronic portable test kit	**MTST230V**
Trip unit tamper protection wire seal	**5108A03H01**
External neutral sensor (2500 A) ②	**RGFCT250A**
External neutral sensor (2000 A) ②	**RGFCT200A**
External neutral sensor (1600 A) ②	**RGFCT160A**
Breaker-mount cause-of-trip indication ③	—
Breaker-mount ammeter module	**DIGIVIEW**
Remote-mount ammeter module	**DIGIVIEWR06**

Notes

① Contact Eaton.
② Required for four-wire systems if neutral protection is desired. Sold separately.
③ Cause-of-trip indication LEDs integrated in RG 310+ trip units.

Technical Data and Specifications

UL 489/CSA Interrupting Capacity Ratings ①

Circuit Breaker Type	Number of Poles	Interrupting Capacity (kA Symmetrical Amperes) Volts AC (50/60 Hz) 240	277	480	600
RGH	3, 4	125	—	65	50
RGC	3, 4	200	—	100	65

IEC 947-2 Interrupting Capacity Ratings ①

Circuit Breaker Type	Number of Poles	Interrupting Capacity (kA Symmetrical Amperes) Volts AC (50/60 Hz) 240	415	690
RGH	3, 4			
I_{cu}		135	70	25
I_{cs}		100	50	13
RGC	3, 4			
I_{cu}		200	100	35
I_{cs}		100	50	18

RG 310+ Specifications

Description	Specification
Trip Unit Type	Digitrip RMS 310+
Breaker Type	
Frame designation	RG
Frames available	1600 A, 2000 A, 2500 A
Continuous current range (A)	800–2500 A
Ground fault pickup (A)	200–1200 A
Interrupting capacities at 480 Vac (kAIC)	65, 100
100% rated	Yes
Protection	
Ordering options	LS, LSI, LSG, LSIG, ALSI, ALSIG
Arcflash reduction maintenance system (or maintenance mode)	Yes
Interchangeable trip unit	Yes
High load alarm (suffix B20) ②	Yes
Ground fault alarm with trip (suffix B21) ②	Yes
Ground fault alarm, no trip (suffix B22) ②	Yes
Zone selective interlocking (suffix ZG)	LSI, LSIG, ALSI, ALSIG
Cause of trip indication	Yes
Thru-cover accessories	No

Notes

① Utilization Category A circuit breakers.

② B2x suffixes cannot be combined with B2x suffixes.

See **Page V4-T2-74** for trip unit specifications.

RG 310+ Adjustability Specifications

310+ Settings		RG Frame 1600 A	2000 A	2500 A
I_r = continuous current or long delay pickup (amperes) (All 310+)	I_r			
	A	800	1000	1600
	B	900	1200	1700
	C	1000	1400	1800
	D	1100	1600	2000
	E	1200	1700	2100
	F	1400	1800	2200
	G	1500	1900	2400
	H (= I_n)	1600	2000	2500
t_r = long delay time (seconds) (All 310+)	Position 1	2	2	2
	Position 2	4	4	4
	Position 3	7	7	7
	Position 4	10	10	10
	Position 5	12	12	12
	Position 6	15	15	15
	Position 7	20	20	20
	Position 8	24	24	24
I_{sd} (x I_r) = short delay pickup (All 310+)	Position 1	2x	2x	2x
	Position 2	3x	3x	2x
	Position 3	4x	4x	2x
	Position 4	5x	5x	3x
	Position 5	6x	6x	4x
	Position 6	7x	7x	5x
	Position 7	8x	8x	6x
	Position 8	8x	8x	6x
	Position 9	9x	9x	6x
t_{sd} = short delay time I^2t (milliseconds) (LS, LSG)	Fixed	67 at10x	67 at10x	67 at10x
t_{sd} = short delay time flat (milliseconds) (LSI, LSIG, ALSI, ALSIG) ①	Position 1	Inst	Inst	Inst
	Position 2	120	120	120
	Position 3	300	300	300
I_g = ground fault pickup (amperes) (LSG, LSIG, ALSIG)	Position 1	200	200	200
	Position 2	400	400	400
	Position 3	600	600	600
	Position 4	800	800	800
	Position 5	1000	1000	1000
	Position 6	1200	1200	1200
t_g = ground fault delay time (milliseconds) (LSG, LSIG, ALSIG)	Position 1	Inst	Inst	Inst
	Position 2	120	120	120
	Position 3	300	300	300
Independently Adjustable Instantaneous (I_i) setting (ALSI, ALSIG)	Yes	2.5x, 4x, 6x, 7x, 8x, 11x	2.5x, 4x, 6x, 7x, 8x, 9x	2.5x, 4x, 6x, 7x
Maintenance Mode (remote) pickup (2.5 x I_n) (ALSI, ALSIG) ②	Fixed	2.5x	2.5x	2.5x

Notes

① 50 ms for ALSI and ALSIG trip units.

② Maintenance Mode is enabled remotely using a 24 Vdc circuit.

Dimensions and Weights

Approximate Dimensions in Inches (mm)

RG-Frame

Number of Poles	Width	Height	Depth
3	15.50 (393.7)	16.00 (406.4)	9.75 (247.7)
4	20.00 (508.0)	16.00 (406.4)	9.75 (247.7)

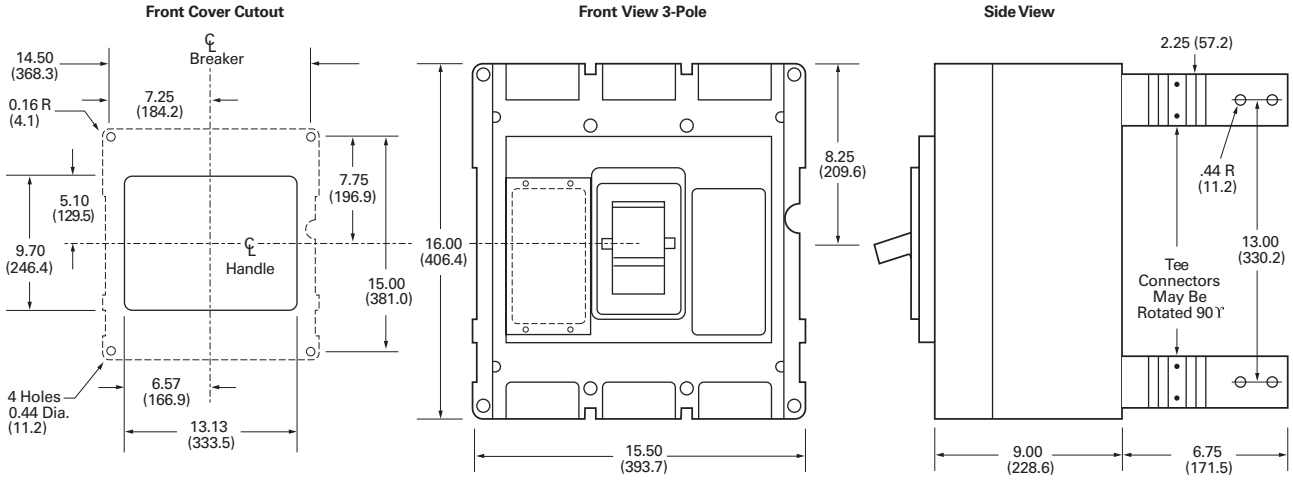

Approximate Shipping Weight in Lbs (kg)

RG-Frame

Breaker Type	Complete Breaker Number of Poles Three-Pole	Four-Pole
1600 Amperes		
RGH, RGC	102 (46.3)	135 (61.2)
2000 Amperes		
RGH, RGC	102 (46.3)	135 (61.2)
2500 Amperes		
RGH, RGC	135 (61.2)	182 (82.6)

Motor Circuit 480 Vac, Protectors

Contents

Description	*Page*
EG-Frame (15–125 Amperes)	**V4-T2-15**
JG-Frame (63–250 Amperes)	**V4-T2-29**
LG-Frame (250–630 Amperes)	**V4-T2-47**
NG-Frame (320–1200 Amperes)	**V4-T2-65**
RG-Frame (800–2500 Amperes)	**V4-T2-74**
Motor Circuit Protectors (MCP) Product Selection Guide and Ordering Information	**V4-T2-86**
Motor Protector Circuit Breakers (MPCB)	**V4-T2-89**
30 mA Ground Fault (Earth Leakage) Module	**V4-T2-92**
Current Limiting Circuit Breaker Module	**V4-T2-96**
High Instantaneous Circuit Breaker for Selective Coordination	**V4-T2-101**
Special Features and Accessories	**V4-T2-104**
Motor Operators	**V4-T2-112**
Plug-In Blocks	**V4-T2-114**
Drawout Cassette	**V4-T2-115**

Motor Circuit Protectors (MCP)

Product Selection Guide and Ordering Information

EG-Frame—480 Vac, 600Y/347 Vac Maximum ①

Continuous Amperes	Cam Setting	Motor Full Load Current Amperes ②	MCP Trip Setting ③	MCP Catalog Number
3	A	0.69 –0.91	9	**HMCPE003A0C**
	B	1.1–1.3	15	
	C	1.6–1.7	21	
	D	2.0–2.2	27	
	E	2.3–2.5	30	
	F	2.6– 2.8	33	
7	A	1.5–2.0	21	**HMCPE007C0C**
	B	2.6–3.1	35	
	C	3.7–3.9	49	
	D	4.8–5.2	63	
	E	5.3–5.7	70	
	F	5.8–6.1	77	
15	A	3.4–4.5	45	**HMCPE015E0C**
	B	5.7–6.8	75	
	C	8.0–9.1	105	
	D	10.4–11.4	135	
	E	11.5–12.6	150	
	F	12.7–13.0	165	
30	A	3.9–9.1	90	**HMCPE030H1C**
	B	11.5–13.7	150	
	C	16.1–18.3	210	
	D	20.7–22.9	270	
	E	23.0–25.2	300	
	F	25.3–26.1	330	

Notes

① UL listed for use with Eaton Motor Starters.

② Motor FLA ranges are typical. The corresponding trip setting is at 13 times the minimum FLA value shown.
Where a 13 times setting is required for an intermediate FLA value, alternate cam settings and/or MCP ratings should be used.

③ For DC applications, actual trip levels are approximately 40% higher than values shown.

EG-Frame—480 Vac, 600Y/347 Vac Maximum, continued ①

Continuous Amperes	Cam Setting	Motor Full Load Current Amperes ②	MCP Trip Setting ③	MCP Catalog Number
50	A	11.5–15.2	150	**HMCPE050K2C**
	B	19.2–22.9	250	
	C	26.9–30.6	350	
	D	34.6–38.3	450	
	E	38.4–42.1	500	
	F	42.2–43.5	550	
70	A	16.1–30.6	210	**HMCPE070M2C**
	B	26.9–32.2	350	
	C	37.6–42.9	490	
	D	48.4–53.7	630	
	E	53.8–59.1	700	
	F	59.2–60.9	770	
100	A	23.0–30.6	300	**HMCPE100R3C**
	B	38.4–46.0	500	
	C	53.8–61.4	700	
	D	69.2–76.8	900	
	E	76.9–84.5	1000	
	F	84.6–87.0	1100	
100	A	38.4–46.0	500	**HMCPE100T3C**
	B	57.6–65.2	750	
	C	76.9–84.5	1000	
	D	④	1250	
	E	④	1375	
	F	④	1500	

JG-Frame—600 Vac Maximum, 250 Vdc Maximum ①

Continuous Amperes	MCP Trip Range (Amperes)	MCP Catalog Number
250	500–1000	**HMCPJ250D5L**
	625–1250	**HMCPJ250F5L**
	750–1500	**HMCPJ250G5L**
	875–1750	**HMCPJ250J5L**
	1000–2000	**HMCPJ250K5L**
	1125–2250	**HMCPJ250L5L**
	1250–2500	**HMCPJ250W5L**

Notes

① UL listed for use with Eaton Motor Starters.

② Motor FLA ranges are typical. The corresponding trip setting is at 13 times the minimum FLA value shown. Where a 13 times setting is required for an intermediate FLA value, alternate cam settings and/or MCP ratings should be used.

③ For DC applications, actual trip levels are approximately 40% higher than values shown.

④ Settings above 10 x I_n are for special applications. Where the ampere rating of the disconnecting means cannot be less than 115% of the motor full load ampere rating.

LG-Frame—600 Vac Maximum, 250 Vdc Maximum ①

Continuous Amperes	MCP Trip Range (Amperes)	MCP Catalog Number
600	1250–2500	**HMCPL600L6G**
	1500–3000	**HMCPL600N6G**
	1750–3500	**HMCPL600R6G**
	2000–4000	**HMCPL600X6G**
	2250–4500	**HMCPL600Y6G**
	2500–5000	**HMCPL600P6G**
	3000–6000	**HMCPL600M6G**

Notes

① UL listed for use with Eaton Motor Starters.

800 and 1200 ampere, 600 Vac maximum motor circuit protectors are available as Series C HMCP product.

Series G Motor Protector Circuit Breakers (MPCB)

Contents

Description	*Page*
EG-Frame (15–125 Amperes)	**V4-T2-15**
JG-Frame (63–250 Amperes)	**V4-T2-29**
LG-Frame (250–630 Amperes)	**V4-T2-47**
NG-Frame (320–1200 Amperes)	**V4-T2-65**
RG-Frame (800–2500 Amperes)	**V4-T2-74**
Motor Circuit Protectors (MCP)	**V4-T2-85**
Motor Protector Circuit Breakers (MPCB)	
Product Selection	**V4-T2-90**
Technical Data and Specifications	**V4-T2-91**
30 mA Ground Fault (Earth Leakage) Module	**V4-T2-92**
Current Limiting Circuit Breaker Module	**V4-T2-96**
High Instantaneous Circuit Breaker for Selective Coordination	**V4-T2-101**
Special Features and Accessories	**V4-T2-104**
Motor Operators	**V4-T2-112**
Plug-In Blocks	**V4-T2-114**
Drawout Cassette	**V4-T2-115**

Motor Protector Circuit Breakers (MPCB)

Product Description

- Eliminates need for separate overload relay

Application Description

- Can be used with contactor to eliminate need for overload relay and still create manual motor control
- Meets requirement for motor branch protection, including:
  - Disconnecting means
  - Branch circuit short circuit protection
  - Overload protection

Features and Benefits

- Phase unbalance protection
- Phase loss protection
- Hot trip/cold trip
- High load alarm
- Pre-detection trip relay option
- Class 10, 15, 20, 30 protection

Standards and Certifications

- IEC 60947-2
- UL 489 100% rated
- UL 508
- CSA C22.2

Listed

Product Selection

JGMP Catalog Numbers

Continuous Amperes	35 kAIC Catalog Number	65 kAIC Catalog Number
50	**JGMPS050G**	**JGMPH050G**
100	**JGMPS100G**	**JGMPH100G**
160	**JGMPS160G**	**JGMPH160G**
250	**JGMPS250G**	**JGMPH250G**

JGMP FLA Ie Dial Setting

Continuous Amperes	A	B	C	D	E	F	G	H
50	20	20	25	30	32	40	45	50
100	40	45	50	63	70	80	90	100
160	63	80	90	100	110	125	150	160
250	100	125	150	160	175	200	225	250

LGMP Catalog Numbers

Continuous Amperes	50 kAIC Catalog Number	65 kAIC Catalog Number
250	**LGMPS250G**	**LGMPH250G**
400	**LGMPS400G**	**LGMPH400G**
600	**LGMPS600G**	**LGMPH600G**
630 ①	**LGMPS630G**	**LGMPH630G**

LGMP FLA Ie Dial Setting

Continuous Amperes	A	B	C	D	E	F	G	H
250	100	125	150	160	175	200	225	250
400	160	200	225	250	300	315	350	400
600	250	300	315	350	400	450	500	600
630 ①	250	300	315	350	400	500	600	630

Notes

① 630 amperes is not a UL listed rating. 600 amperes is the maximum UL or CSA for LG breaker.

For pre-trip alarm option, order Style Number 5721B31G02.

For additional breaker solutions, see **Page V4-T2-267**.

Technical Data and Specifications

JGMPS and JGMPH Rating and Ampere Range

Breaker Capacity (kA rms) AC 50–60 Hz			Maximum Rated Current—250 A Breaker Type JGMPS	JGMPH
IEC 60947-2	220–240 Vac	I cu	85	100
		I cs	85	100
	380–415 Vac	I cu	40	70
		I cs	40	70
	660–690 Vac	I cu	12	14
		I cs	6	7
NEMA UL 489	240 Vac		85	100
	480 Vac		35	65
	600 Vac		25	35
Number of poles			3	3
Ampere range			50–250	50 –250

LGMPS and LGMPH Rating and Ampere Range

Breaker Capacity (kA rms) AC 50–60 Hz			Maximum Rated Current—630 A ① Breaker Type LGMPS	LGMPH
IEC 60947-2	220–240 Vac	I cu	85	100
		I cs	85	100
	380–415 Vac	I cu	50	70
		I cs	50	53
	660–690 Vac	I cu	20	25
		I cs	10	13
NEMA UL 489	240 Vac		85	100
	480 Vac		50	65
	600 Vac		25	35
Number of poles			3	3
Ampere range			250–630 ①	250 –630 ①

Notes

① 630 amperes is not a UL listed rating. 600 amperes is the maximum UL or CSA for LG breaker.

For pre-trip alarm option, order Style Number 5721B31G02.

30 mA Ground Fault (Earth Leakage) Modules

Clockwise from Left:
JG, LG, EG MCCBs Shown with Ground Fault (Earth Leakage) Module

Contents

Description	*Page*
EG-Frame (15–125 Amperes)	**V4-T2-15**
JG-Frame (63–250 Amperes)	**V4-T2-29**
LG-Frame (250–630 Amperes)	**V4-T2-47**
NG-Frame (320–1200 Amperes)	**V4-T2-65**
RG-Frame (800–2500 Amperes)	**V4-T2-74**
Motor Circuit Protectors (MCP)	**V4-T2-85**
Motor Protector Circuit Breakers (MPCB)	**V4-T2-89**
30 mA Ground Fault (Earth Leakage) Module	
Product Selection	**V4-T2-93**
Dimensions	**V4-T2-94**
Current Limiting Circuit Breaker Module	**V4-T2-96**
High Instantaneous Circuit Breaker for Selective Coordination	**V4-T2-101**
Special Features and Accessories	**V4-T2-104**
Motor Operators	**V4-T2-112**
Plug-In Blocks	**V4-T2-114**
Drawout Cassette	**V4-T2-115**

30 mA Ground Fault (Earth Leakage) Module

Product Description

Eaton offers three- and four-pole 30 mA ground fault (earth leakage) protection modules for Series G E-, J- and L-frame molded case circuit breakers (MCCBs). Separate UL listed and IEC rated devices are available for each frame.

The modules are bottom mounted and are available for each frame circuits up to:

- EG: 125 amperes
- JG: 150 (UL), 160 (IEC) or 250 amperes
- LG: 400, 600 (UL) or 630 (IEC) amperes

The module is completely self contained, including a current sensor, relay and power supply inside the device. Current pickup settings are selectable from 0.03 to 10 amperes for all devices, except for the UL listed module, for which settings are selectable from 0.03 to 30 amperes. Time delays are also selectable from Instantaneous to 1.0 second for pickup settings of 0.10 amperes and above. The current pickup setting of 0.03 amperes defaults to an Instantaneous time setting regardless of the time dial's position.

Two alarm contacts are included with each device, which can be wired externally for remote indication. Both of these are also indicated by an LED on the front of the device:

1. 50% pre-trip: alarms when the earth leakage current reaches 50% of the set pickup setting value.
2. 100% after trip: alarms when the breaker reaches the set pickup setting value and the breaker trips.

UL-Rated LG-Frame Earth Leakage Module Faceplate

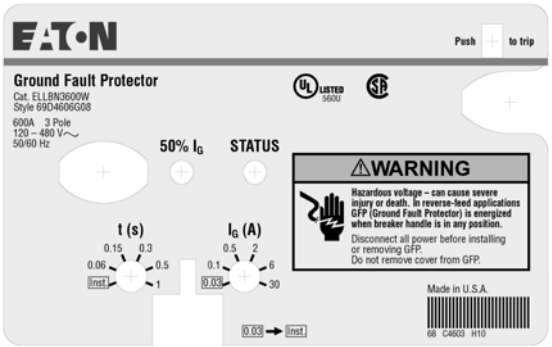

IEC-Rated LG-Frame Earth Leakage Module Faceplate

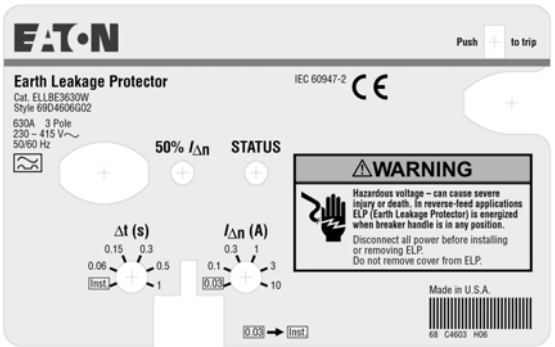

Product Selection

EG-Frame

EG-Frame Ground Fault Modules, UL-Rated (Bottom Mounted, 120–480 Vac, 50/60 Hz) ①

Ampere Rating	Number of Poles	Catalog Number
125	3	**ELEBN3125G**
125	4	**ELEBN4125G**

EG-Frame Earth Leakage Modules, IEC-Rated (Bottom Mounted, 230–415 Vac, 50/60 Hz)

Ampere Rating	Number of Poles	Catalog Number
125	3	**ELEBE3125G**
125	4	**ELEBE4125G**

JG-Frame

JG-Frame Ground Fault Modules, UL-Rated (Bottom Mounted, 120–480 Vac, 50/60 Hz)

Ampere Rating	Number of Poles	Catalog Number
150	3	**ELJBN3150W**
150	4	**ELJBN4150W**
250	3	**ELJBN3250W**
250	4	**ELJBN4250W**

JG-Frame Earth Leakage Modules, IEC-Rated (Bottom Mounted, 230–415 Vac, 50/60 Hz)

Ampere Rating	Number of Poles	Catalog Number
160	3	**ELJBE3160W**
160	4	**ELJBE4160W**
250	3	**ELJBE3250W**
250	4	**ELJBE4250W**

Note

① Shunt trip and undervoltage release cannot be used in an EG breaker connected to an earth leakage module.

LG-Frame

LG-Frame Ground Fault Modules, UL-Rated (Bottom Mounted, 120–480 Vac, 50/60 Hz)

Ampere Rating	Number of Poles	Catalog Number
400	3	**ELLBN3400W**
400	4	**ELLBN4400W**
600	3	**ELLBN3600W**
600	4	**ELLBN4600W**

LG-Frame Earth Leakage Modules, IEC-Rated (Bottom Mounted, 230–415 Vac, 50/60 Hz)

Ampere Rating	Number of Poles	Catalog Number
400	3	**ELLBE3400W**
400	4	**ELLBE4400W**
630	3	**ELLBE3630W**
630	4	**ELLBE4630W**

Dimensions

Approximate Dimensions in Inches (mm)

Assembled Breaker and Earth Leakage Module

Frame	Height	Width	Depth
Three-Pole			
EG	10.25 (260.3)	3.00 (76.2)	2.98 (75.8)
JG	11.25 (285.8)	4.13 (104.9)	3.57 (90.7)
LG	15.38 (390.7)	5.48 (139.2)	4.06 (103.1)
Four-Pole			
EG	10.25 (260.3)	4.00 (101.6)	2.98 (75.8)
JG	11.25 (285.8)	5.50 (139.7)	3.57 (90.7)
LG	15.38 (390.7)	7.23 (183.6)	4.06 (103.1)

EG-Frame With Earth Leakage Module

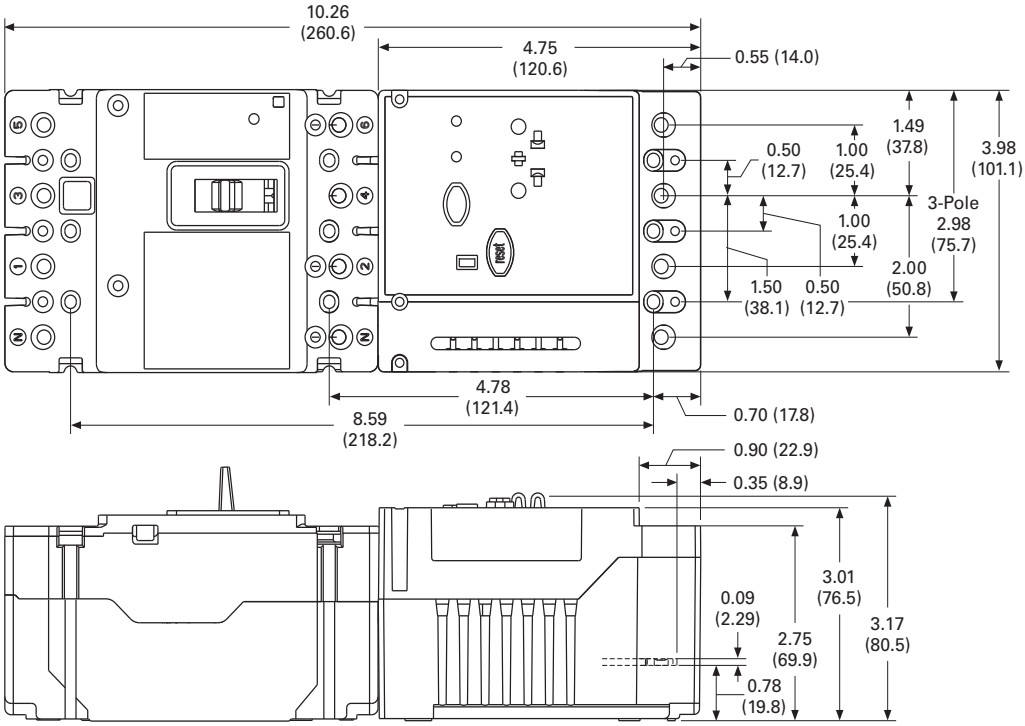

JG-Frame With Earth Leakage Module

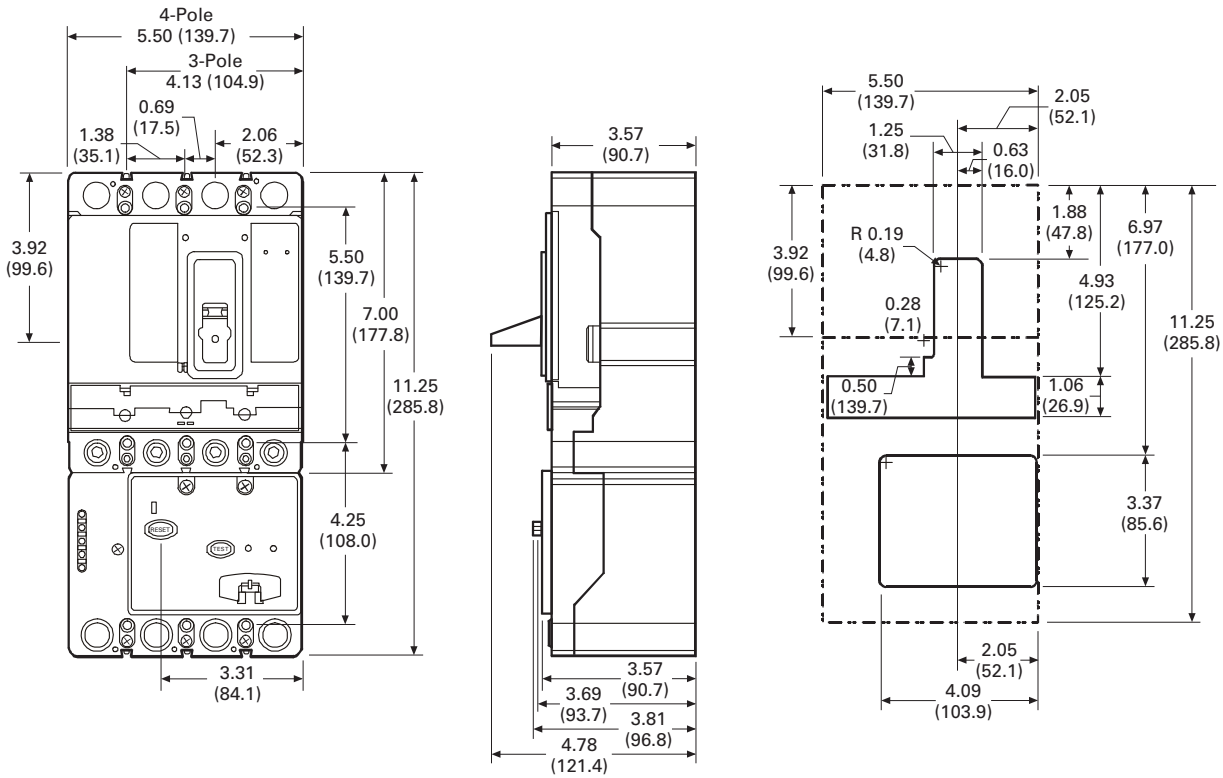

LG-Frame With Earth Leakage Module

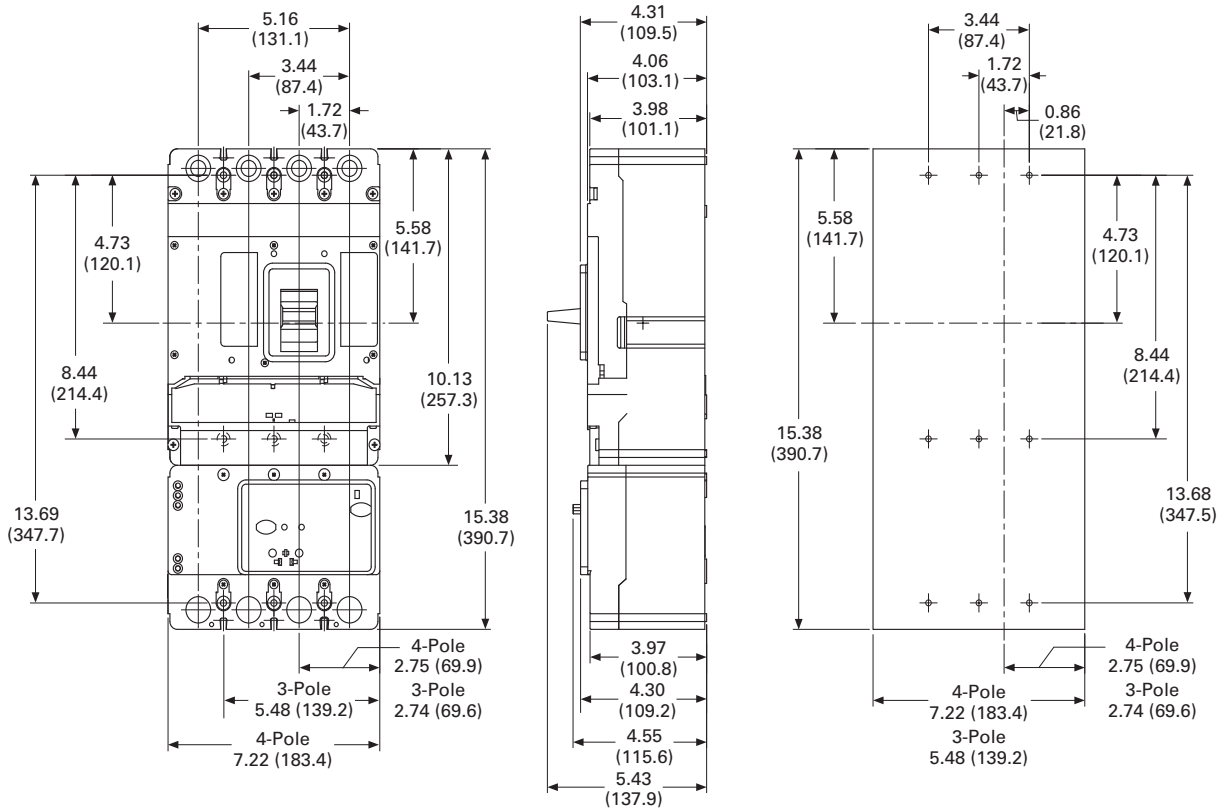

Current Limiting Circuit Breaker Modules

Contents

Description	*Page*
EG-Frame (15–125 Amperes)	**V4-T2-15**
JG-Frame (63–250 Amperes)	**V4-T2-29**
LG-Frame (250–630 Amperes)	**V4-T2-47**
NG-Frame (320–1200 Amperes)	**V4-T2-65**
RG-Frame (800–2500 Amperes)	**V4-T2-74**
Motor Circuit Protectors (MCP)	**V4-T2-85**
Motor Protector Circuit Breakers (MPCB)	**V4-T2-89**
30 mA Ground Fault (Earth Leakage) Module	**V4-T2-92**
Current Limiting Circuit Breaker Module	
Product Selection	**V4-T2-97**
Technical Data and Specifications	**V4-T2-98**
Dimensions and Weights	**V4-T2-98**
High Instantaneous Circuit Breaker for Selective Coordination	**V4-T2-101**
Special Features and Accessories	**V4-T2-104**
Motor Operators	**V4-T2-112**
Plug-In Blocks	**V4-T2-114**
Drawout Cassette	**V4-T2-115**

Current Limiting Circuit Breaker Module

Product Overview

Power demand continues to grow in new and existing facilities. To meet increased demand, larger utility supplies, spot networks and large facility transformers are installed. The increased capacity of the electrical source results in increased fault currents in excess of 100 kA short-circuit protection. Eaton manufactures non-fused current limiting modules with interrupting capacities up to 200 kA at 600 Vac or 70 kA at 690 Vac. Unlike fused current limiters with a one-time use, a current limiter module provides an automatic reset of the module after a short-circuit event. Resetting the molded-case circuit breaker is the only action required to restore critical power to the system; there is no time wasted with sourcing the correct replacement fuses or module to bring system back online.

Product Description

The current limiting breaker modules use a unique contact design to enhance the system protection similar to that of the circuit breaker. When high short-circuit current is flowing through the contacts of these modules, the design results in very high interrupting capacities and improved current limiting characteristics.

Application Description

High-performance breakers are most commonly applied when very high fault levels are available and with applications where the current limiting capability is used upstream of the final load to limit current. Typical loads include lighting, power distribution, and motor control applications.

Features and Benefits

Superior system protection:

- Auto reset improves system uptime and eliminates the need for finding replacement parts
- No fuses to replace, reducing the overall cost of ownership and the waste created by fuses
- Overloads, by using inverse time current tripping characteristics of the molded-case circuit breaker
- Low-level short circuits, by using instantaneous and/or short-time delay tripping characteristics of the molded-case circuit breaker
- High-level short circuits, by using ultra-high-speed, blow-apart contacts of the current limiting module in series with the circuit breaker contacts
- Let-through currents, by improved opening speed of the contacts, the resultant rapid rise of arc voltage introduces impedance into the system

Standards and Certifications

- IEC 60947-2
- UL 489
- CSA C22.2

Listed

Product Selection

Series G High Performance Family Offering

Type	Product	Amperes	480 Vac (UL)	600 Vac (UL)	415 Vac (IEC) I_{cu}	415 Vac (IEC) I_{cs}	690 Vac (IEC) I_{cu}	690 Vac (IEC) I_{cs}
EGC 3P thermal-magnetic	Breaker only	15–125	100	35 ①	100	100	—	—
	With limiter	15–100	150	100 ①	150	150	—	—
JG 3P thermal-magnetic	Breaker only	70–250	200	50	200	200	18	14
	With limiter	70–225	200	200	200	150	70	18
JG 3P electronic	Breaker only	20–250	200	50	200	200	18	14
	With limiter	100–250	200	200	200	150	70	18
LG 3P thermal-magnetic	Breaker only	250–600	200	65	200	200	35	18
LG3P electronic	Breaker only	100–600	200	65	200	200	35	18

EG-Frame

EG IC Rating—150 kAIC at 415 and 480 Vac

UL Listed (NEMA/IEC Rated) Base Molded Case Circuit Breaker	Breaker with Line Side Mounted Current Limiter	Breaker with Load Side Mounted Current Limiter	Line and Load Terminations Included ②	Interphase Barrier Included for Limiter
EGC3015FFG	**EGC3015FFGQ01**	**EGC3015FFGQ02**	**T125EF**	**EIPBSK**
EGC3016FFG	**EGC3016FFGQ01**	**EGC3016FFGQ02**	**T125EF**	**EIPBSK**
EGC3020FFG	**EGC3020FFGQ01**	**EGC3020FFGQ02**	**T125EF**	**EIPBSK**
EGC3025FFG	**EGC3025FFGQ01**	**EGC3025FFGQ02**	**T125EF**	**EIPBSK**
EGC3030FFG	**EGC3030FFGQ01**	**EGC3030FFGQ02**	**T125EF**	**EIPBSK**
EGC3032FFG	**EGC3032FFGQ01**	**EGC3032FFGQ02**	**T125EF**	**EIPBSK**
EGC3035FFG	**EGC3035FFGQ01**	**EGC3035FFGQ02**	**T125EF**	**EIPBSK**
EGC3040FFG	**EGC3040FFGQ01**	**EGC3040FFGQ02**	**T125EF**	**EIPBSK**
EGC3045FFG	**EGC3045FFGQ01**	**EGC3045FFGQ02**	**T125EF**	**EIPBSK**
EGC3050FFG	**EGC3050FFGQ01**	**EGC3050FFGQ02**	**T125EF**	**EIPBSK**
EGC3060FFG	**EGC3060FFGQ01**	**EGC3060FFGQ02**	**T125EF**	**EIPBSK**
EGC3063FFG	**EGC3063FFGQ01**	**EGC3063FFGQ02**	**T125EF**	**EIPBSK**
EGC3070FFG	**EGC3070FFGQ01**	**EGC3070FFGQ02**	**T125EF**	**EIPBSK**
EGC3080FFG	**EGC3080FFGQ01**	**EGC3080FFGQ02**	**T125EF**	**EIPBSK**
EGC3090FFG	**EGC3090FFGQ01**	**EGC3090FFGQ02**	**T125EF**	**EIPBSK**
EGC3100FFG	**EGC3100FFGQ01**	**EGC3100FFGQ02**	**T125EF**	**EIPBSK**

Notes

① 600Y/347V.

② Two interphase barriers included on line end mounted limiter; (2) line end of limiter. Four interphase barriers included on load end mounted limiter; (2) line end of breaker (2) load end of limiter.

Technical Data and Specifications

UL 489 Current Limiting Data

Frame	Circuit	Ip (kA)	I^2T (10^6A^2S)
EGC…Q	240 V/150 kA	21.80	0.277
EGC…Q	480 V/150 kA	21.80	0.277
EGC…Q	600 V/100 kA	22.60	0.387

Dimensions and Weights

Approximate Dimensions in Inches (mm)

Assembled Breaker and Current Limiting Module

Frame	Height	Width	Depth	Weight in lbs (kg)
EG	9.66 (245.7)	3.00 (76.2)	2.98 (75.8)	2.91 (1.32)
HMCP	9.66 (245.7)	3.00 (76.2)	2.98 (75.8)	4.18 (1.90)

EG-Frame With Current Limiter Module

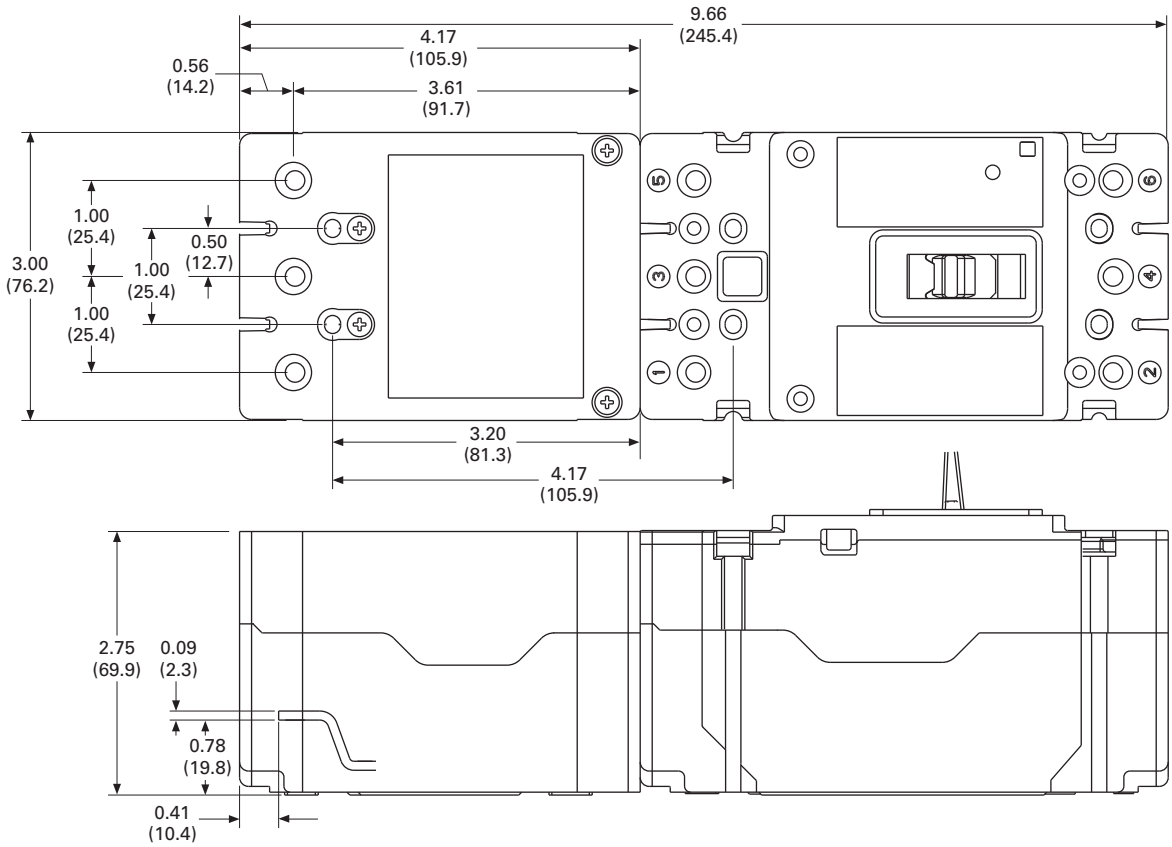

JG Frame

JG IC Rating—200 kAIC at 600 Vac and 70 kAIC at 690 Vac

Ampere Rating	Magnetic Range	UL Listed, IEC Rated Breaker With Line Side Mounted Current Limiter ①	UL Listed, IEC Rated Breaker With Load Side Mounted Current Limiter ②	IEC Rated Breaker With Line Side Mounted Current Limiter ①	IEC Rated Breaker With Load Side Mounted Current Limiter ②
		Fixed Thermal, Adjustable Magnetic		**Adjustable Thermal, Adjustable Magnetic**	
70	350–700	**JGH3070FAGQ01**	**JGH3070FAGQ02**	—	—
90	450–900	**JGH3090FAGQ01**	**JGH3090FAGQ02**	—	—
100	500–1000	**JGH3100FAGQ01**	**JGH3100FAGQ02**	**JGH3100AAGQ01**	**JGH3100AAGQ02**
125	625–1250	**JGH3125FAGQ01**	**JGH3125FAGQ02**	**JGH3125AAGQ01**	**JGH3125AAGQ02**
150	750–1550	**JGH3150FAGQ01**	**JGH3150FAGQ02**	—	—
160	800–1600	—	—	**JGH3160AAGQ01**	**JGH3160AAGQ02**
175	875–1750	**JGH3175FAGQ01**	**JGH3175FAGQ02**	—	—
200	1000–2000	**JGH3200FAGQ01**	**JGH3200FAGQ02**	**JGH3200AAGQ01**	**JGH3200AAGQ02**
225	1125–2250	**JGH3225FAGQ01**	**JGH3225FAGQ02**	—	—
		Electronic Trip LS			
250	—	**JGH325033GQ01**	**JGH325033GQ02**	—	—
		Electronic Trip LSI			
250	—	**JGH325032GQ01**	**JGH325032GQ02**	—	—
		Electronic Trip LSG			
250	—	**JGH325035GQ01**	**JGH325035GQ02**	—	—
		Electronic Trip LSIG			
250	—	**JGH325036GQ01**	**JGH325036GQ02**	—	—

Series G HMCP

Ampere Rating	Motor Circuit Protector with Line Side Mounted Current Limiter	Breaker with Load Side Mounted Current Limiter
250	**HMCPJ250D5LQ01**	**HMCPJ250D5LQ02**
250	**HMCPJ250F5LQ01**	**HMCPJ250F5LQ02**
250	**HMCPJ250G5LQ01**	**HMCPJ250G5LQ02**
250	**HMCPJ250J5LQ01**	**HMCPJ250J5LQ02**
250	**HMCPJ250K5LQ01**	**HMCPJ250K5LQ02**
250	**HMCPJ250L5LQ01**	**HMCPJ250L5LQ02**

Line and Load Terminals

Maximum Breaker Amperes	Terminal Body Material	Wire Type	Metric Wire Range mm^2	AWG Wire Range/ Number of Conductors	Catalog Number
Standard Pressure Type Terminals					
250	Aluminum	Cu/Al	10–185	#8–350 (1)	**TA250FJ** ③

Notes

① Two interphase barriers provided, mounted on line end of limiter, catalog number **FJIPBK**.
② Four interphase barriers provided, (2) line end of breaker, (2) load end of limiter.
③ Line and load terminals included with products listed above.

Technical Data and Specifications

UL 489 Current Limiting Data

Frame	Circuit	Ip (kA)	I^2T (10^6A^2S)
JGH…Q	240 V/200 kA	48.60	2.47
JGH…Q	480 V/200 kA	48.60	2.47
JGH…Q	600 V/200 kA	48.60	2.47

Dimensions and Weights

Approximate Dimensions in Inches (mm)

Assembled Breaker and Current Limiting Module

Frame	Height	Width	Depth	Weight in lbs (kg)
JG + limiter	13.06 (331.7)	4.13 (104.9)	3.44 (87.4)	9.87 (4.48)
HMCP	13.06 (331.7)	4.13 (104.9)	3.44 (87.4)	9.87 (4.48)

JG-Frame With Current Limiter Module

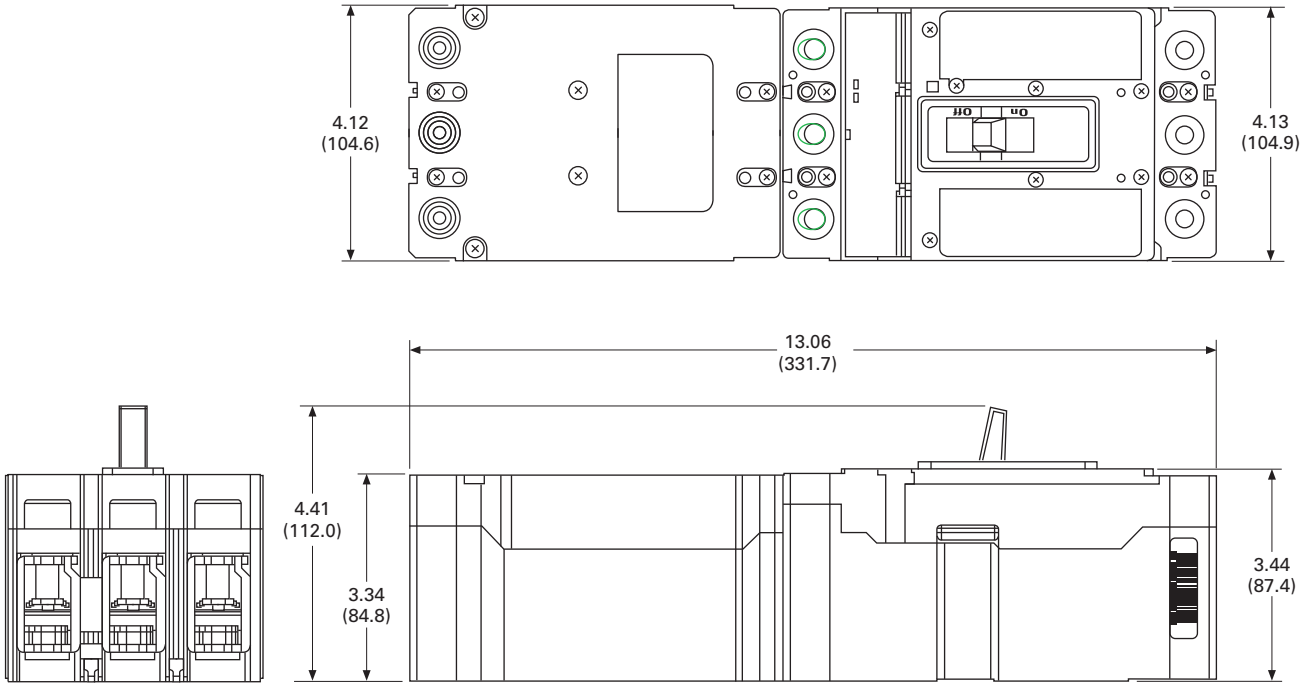

High Instantaneous Circuit Breaker for Selective Coordination

Contents

Description	*Page*
EG-Frame (15–125 Amperes)	**V4-T2-15**
JG-Frame (63–250 Amperes)	**V4-T2-29**
LG-Frame (250–630 Amperes)	**V4-T2-47**
NG-Frame (320–1200 Amperes)	**V4-T2-65**
RG-Frame (800–2500 Amperes)	**V4-T2-74**
Motor Circuit Protectors (MCP)	**V4-T2-85**
Motor Protector Circuit Breakers (MPCB)	**V4-T2-89**
30 mA Ground Fault (Earth Leakage) Module	**V4-T2-92**
Current Limiting Circuit Breaker Module	**V4-T2-96**
High Instantaneous Circuit Breaker for Selective Coordination	
Product Selection	**V4-T2-102**
Technical Data and Specifications	**V4-T2-103**
Dimensions	**V4-T2-103**
Special Features and Accessories	**V4-T2-104**
Motor Operators	**V4-T2-112**
Plug-In Blocks	**V4-T2-114**
Drawout Cassette	**V4-T2-115**

High Instantaneous Circuit Breaker for Selective Coordination

Product Description

Eaton's Electrical Sector introduces new high-magnetic withstand molded case circuit breakers, specifically designed for critical operations and selective coordination requirements. The high-magnetic withstand LHH and NHH frames continue the legacy of circuit breaker innovation for which Eaton is recognized throughout the world. The LHH and NHH breakers are equipped with 125 to 400 ampere trip units with high-magnetic capability. This design enables the breakers to withstand up to 90 times rated current before opening under short-circuit conditions.

The LHH and NHH circuit breakers incorporate a higher level of instantaneous pickup, thus allowing for higher current levels of selective coordination. Standard molded case circuit breakers typically are furnished with a magnetic pickup or electronic instantaneous adjustment or instantaneous override set at 10 times (10x) the continuous trip rating.

Features, Benefits and Functions

Eaton's new LHH and NHH molded case circuit breakers are furnished with a higher level of magnetic pickup or electronic instantaneous settings as indicated in table on **Page V4-T2-103**. These higher levels of magnetic pickup and electronic instantaneous values in turn allow the system designer to obtain selective coordination at fault current levels up to these higher ratings. Greater values of selective coordination are available based on manufacturer tested combinations using the LHH and NHH as line-side breakers and standard breakers as load-side devices. Refer to IA01200002E to determine the maximum fault values that selective coordination achieves. When the line-side and load-side molded case circuit breaker trip ratings are chosen to coordinate in the overload range, they also can be selectively coordinated in the fault range up to the values listed in the table on **Page V4-T2-103** or IA01200002E. For overcurrents protected by circuit breakers on the load-side of the LHH or NHH, only the effected load-side circuit breaker will open, while the line-side LHH and/or NHH circuit breakers remain closed, thus providing continuity of power to the other critical loads supplied by the LHH or NHH circuit breakers.

Benefits of Using the LHH and NHH Molded Case Circuit Breakers

Customer expectations and codes are driving product development to protect customers' critical operations. NEC® 2005 and 2008 requires circuits with elevators, emergency systems, legally required standby systems, health care essential systems and critical operation power systems to be selectively coordinated. Simply stated, only the closest protective device directly protecting the circuit having an overcurrent (overload or fault) condition should open.

All other overcurrent protective devices within these systems shall remain closed. Similarly, backup power system designs of a critical nature that are not code mandated may also require overcurrent protective devices to be selectively coordinated as much as practicable to provide a higher level of uptime.

Proven Technology and Performance

The LHH is based on the Series G L-Frame circuit breaker, sharing the same small footprint and field-fit accessories as the L-Frame breaker. The NHH is based on the Series G N-Frame circuit breaker and shares the same footprint and accessories as the N-Frame breaker. NHH accessories must be factory installed.

The LHH incorporates a thermal-magnetic trip unit with fixed thermal and fixed magnetic settings. The NHH has an OPTIM™ electronic trip unit with LSI adjustment capabilities. The instantaneous setting is adjustable from 1000–4000 A or may be turned off to default to the frame override of 14,000 A. A hand-held OPTIMizer must be used with the NHH to adjust short-time delay and instantaneous, however, the long delay pickup is fixed and cannot be adjusted.

The LHH and NHH breakers are available in Eaton's panelboards and switchboards.

Standards and Certifications

- UL
- CSA

Listed

Product Selection

LHH

LHH and NHH Catalog Numbers

Ampere Rating	Thermal-Magnetic Trip Unit LHH Frame	LSI Electronic Trip Unit NHH Frame
125	**LHH3125FFG**	—
150	**LHH3150FFG**	**NHH3150T52X15**
175	**LHH3175FFG**	**NHH3175T52X15**
200	**LHH3200FFG**	**NHH3200T52X15**
225	**LHH3225FFG**	**NHH3225T52X15**
250	**LHH3250FFG**	**NHH3250T52X15**
300	**LHH3300FFG**	**NHH3300T52X15**
350	**LHH3350FFG**	**NHH3350T52X15**
400	**LHH3400FFG**	—

Technical Data and Specifications

- Three-pole
- 65 kAIC at 480 Vac
- 125–400 ampere LHH
- 150–350 ampere NHH
- Trip units:
- LHH—thermal-magnetic
- NHH—LSI electronic trip unit
- No rating plugs required
- Factory-sealed breakers
- LHH uses same internal and external accessories as standard Series G L-Frame circuit breaker
- NHH uses same internal and external accessories as standard Series G N-Frame circuit breaker

LHH and NHH Electrical Characteristics

Short-Circuit Current Ratings (kA rms) AC 50–60 Hz

Description	Breaker Type LHH	NHH
Max. rated current (amperes)	400	350
NEMA UL 489		
240 Vac	100	100
480 Vac	65	65
600 Vac	35	35
250 Vac	42	—
IEC 60947-2		
220 Vac	100	100
415 Vac	70	70
690 Vac	25	25
125/250 Vdc	22	—
Number of poles	3	3
Ampere range	125–400 A	150–350 A

Continuous Current Ratings

Continuous Current Rating (I_r)	Magnetic Trip Point	Continuous Current Multiplier	Instantaneous Trip Point	Continuous Current Multiplier	Short Delay Pickup
125 A	2500 A	20x	—	—	—
150 A	2500 A	16x	14,000 A	93x	225–1200 A
175 A	4000 A	22x	14,000 A	80x	260–1400 A
200 A	4000 A	20x	14,000 A	70x	300–1600 A
225 A	6000 A	26x	14,000 A	62x	338–1800 A
250 A	6000 A	24x	14,000 A	56x	375–2000 A
300 A	6000 A	20x	14,000 A	47x	450–2400 A
350 A	6000 A	17x	14,000 A	40x	525–2800 A
400 A	6000 A	15x	—	—	—

Dimensions

Approximate Dimensions in Inches (mm)

Dimensions

Description	Height	Width	Depth	Weight in Lbs (kg)
LHH	10.13 (257.3)	5.48 (139.2)	4.09 (103.9)	12.36 (5.6)
NHH	16.00 (406.4)	8.25 (209.5)	5.50 (139.7)	46.80 (21.2)

L-Frame

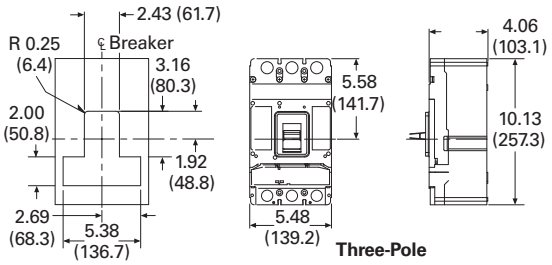

N-Frame

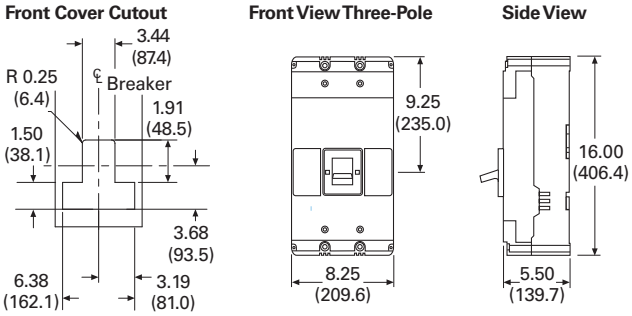

Contents

Description	*Page*
EG-Frame (15–125 Amperes)	**V4-T2-15**
JG-Frame (63–250 Amperes)	**V4-T2-29**
LG-Frame (250–630 Amperes)	**V4-T2-47**
NG-Frame (320–1200 Amperes)	**V4-T2-65**
RG-Frame (800–2500 Amperes)	**V4-T2-74**
Motor Circuit Protectors (MCP)	**V4-T2-85**
Motor Protector Circuit Breakers (MPCB)	**V4-T2-89**
30 mA Ground Fault (Earth Leakage) Module	**V4-T2-92**
Current Limiting Circuit Breaker Module	**V4-T2-96**
High Instantaneous Circuit Breaker for Selective Coordination	**V4-T2-101**
Special Features and Accessories	
Internal Accessories	**V4-T2-106**
External Accessories and Test Kit	**V4-T2-107**
Accessories	**V4-T2-109**
Motor Operators	**V4-T2-112**
Plug-In Blocks	**V4-T2-114**
Drawout Cassette	**V4-T2-115**

Special Features and Accessories

Eaton's molded case circuit breakers are designed to provide circuit protection for low voltage distribution systems. They are described by NEMA as, "... a device for closing and interrupting a circuit between separable contacts under both normal and abnormal conditions," and furthermore as, "... a breaker assembled as an integral unit in a supporting and enclosing housing of insulating material." The National Electrical Code (NEC) describes them as, "A device designed to open and close a circuit by non-automatic means, and to open the circuit automatically on a predetermined overload of current, without injury to itself when properly applied within its rating."

So designed, Eaton circuit breakers protect conductors against overloads and conductors and connected apparatus, such as motors and motor starters, against short circuits.

In low voltage distribution systems, there are many varied applications of molded case circuit breakers. Eaton offers the most comprehensive family of molded case circuit breakers in the industry.

This section of circuit breakers includes:

- Thermal-magnetic trip breakers
- Electronic rms trip breakers
- Molded case switches
- Motor circuit protectors
- Current limiting breakers
- Special application breakers

Modified Breakers

Eaton breakers can be ordered with internal accessories installed. These modified breakers will be subject to an addition charge.

Special Calibration

Special non-UL listed calibrations are available for certain ambient temperatures other than 40 °C and for frequencies other than 50/60 Hz or DC. Reduced interrupting ratings will apply for 400 Hz applications.

- Add suffix H01 to breaker catalog number for 400 Hz rating

50 °C Calibration

Note: Breakers equipped with electronic trip units can operate reliably in ambient temperatures of 50 °C. Add suffix "V3" to NG MCCBs to remove standard 40 °C labeling.

Add suffix "V" to catalog number for complete thermal magnetic breaker when ordering listed ampere ratings for breakers to be used in 50 °C ambients. 50 °C ambient MCCBs are not UL listed.

Contact Eaton for availability.

Calibrations and Treatment

Description	Frame EG	JG	LG	NG	RG
Special calibration	■	■	■	■	■
Moisture-fungus treatment	■	■	■	■	■

Moisture-Fungus Treatment

All Eaton circuit breaker cases are molded from glass-polyester, which does not support the growth of fungus. Any parts that are susceptible to the growth of fungus will require special treatment.

Order by description.

- Add suffix J01 to breaker catalog number

Freeze-Tested Circuit Breakers

The circuit breakers may be ordered with freeze testing. This option uses special lubrication and mechanical operation is verified at –40 °C.

- Add suffix F01 to catalog number –57 °F, F02 –30 °F

Marine Applications

E- to R-Framed circuit breakers can be supplied to meet the following marine specifications:

- U.S. Coast Guard CFR 46; ABS—American Bureau of Shipping; IEEE 45; DNV; and Lloyds

These specifications generally require molded case circuit breakers to be supplied with 50 °C ambient, and plug-in adapter kits. When plug-in adapter kits are used, no terminals need be supplied (switchboard applications).

Circuit breakers can also be supplied to meet UL 489 Supplement SA (Marine use) and UL 489 Supplement SB (Naval Use).

UL 489 Supplement SA applies to vessels over 65 feet (19.8m) in length.

Requirements include 40 °C ambient calibration, special labeling, and no use of aluminum conductors or terminals. (No 50 °C.)

- Add suffix H08

Or you can choose to add 50°C ambient but then there is no "UL" mark.

- Add suffix VH08

UL 489 Supplement SB requires partial 50 °C ambient calibration, vibration testing, special nameplating and no use of aluminum conductors or terminals. Eaton chooses to always fully calibrate to 50 °C ambient. ("Naval" labeled per UL but no "UL" mark due to 50 °C label.)

- Add suffix VH09

Certified Test Reports

Eaton breakers can be ordered with certified test reports at the time of order entry. Test report documents the thermal and magnetic or electronic tripping characteristics of the individual breaker. Breaker and test report must be ordered together. Add suffix 12 to breaker catalog number and enter separate line item on order for certified test report.

Standards and Certifications

Molded case circuit breakers are designed to conform with the following standards:

- Underwriters Laboratories Inc., Standard UL 489, molded case circuit breakers and circuit breaker enclosures
- National Electrical Manufacturers Association (NEMA) Standards Publication No. AB1-1993, molded case circuit breakers
- Australian Standard AS 2184, molded case circuit breakers
- British Standards Institution Standard BS 4752: Part 1, switchgear and control gear Part 1: circuit breakers
- Canadian Standards Association (CSA) Standard C22.2 No. 5, service entrance and branch circuit breakers
- International Electrotechnical Commission Recommendations IEC 60947-2, circuit breakers
- Japanese T-Mark Standard molded case circuit breakers
- South African Bureau of Standards, Standard SABS 156, Standard Specification for molded case circuit breakers
- Swiss Electro-Technical Association Standard SEV 157-1, safety regulations for circuit breakers
- Union Technique de l'Electricite Standard NF C 63-120, low voltage switchgear and control gear circuit breaker requirements
- Verband Deutscher Elektrotechniker (Association of German Electrical Engineers) Standard VDE 0660, low voltage switchgear and control gear, circuit breakers

Conformance with these standards satisfies most local and international codes, assuming user acceptability and simplified application.

Molded case circuit breakers equal or exceed Federal Specification Classification W-C-375b requirements for the particular class associated with the circuit breaker frame being considered.

Open breakers do not have service entrance ratings. Service entrance rating is part of the enclosure.

Listed

Internal Accessories

Alarm Lockout

The alarm switches operate when the circuit breaker is tripped by a short circuit or overcurrent, but also when it is tripped by a shunt trip or undervoltage release.

Auxiliary Switches

Auxiliary switches are used for signaling and control purposes. The various functions of the auxiliary switches (changeover) are shown on **Page V4-T2-108**.

Shunt Trips

The shunt trip is used for remote tripping.

The coil of the shunt trip is rated only for short-time operation.

It is not permissible with the circuit breaker open to apply a continuous opening command to the shunt trip in order to prevent the breaker from closing. This means that interlocking circuits with continuous commands may not be set up with shunt trips.

Undervoltage Releases

The circuit breaker cannot be closed until the undervoltage release is energized. If the release is not energized, the circuit breaker can only perform an idle switching operation.

Frequent idle switching actions should be avoided as they shorten the endurance of the circuit breaker.

Digitrip 310+ Electronic Trip Unit Accessories

Cause of Trip Display/Remote Mount Cause of Trip Display

The Cause of Trip Display can be field-installed on any Digitrip RMS 310+ trip unit. The device provides breaker information through an LCD screen, such as cause of trip, phrase current, ground current and low loads. The display is ideal for troubleshooting common trips such as ground fault, long delay, and instantaneous/short delay. The DIGIVIEW version will provide a local display at the breaker without additional wiring by connecting directly onto the trip unit. The DIGIVIEWR06 version has a 6 foot cable that allows users to mount the display on the outside of an enclosure door and connect to the trip unit that is contained inside the enclosure.

The DIGIVIEWR06 is NEMA 3R rated.

Cause of Trip Display/ Remote Mount Cause of Trip Display

Catalog Number
DIGIVIEW
DIGIVIEWR06

Cause of Trip LED Module

The Cause of Trip LED Module can be field-installed on any Digitrip RMS 310+ trip unit. The device provides a cause of trip indication via LED. The Cause of Trip LED Module connects directly onto the trip unit. When the breaker trips, the module indicates the cause of trip (long delay, short delay, instantaneous and ground) via LED indication. The module is reset after the breaker is reset.

Cause of Trip LED Module

Catalog Number
TRIP-LED

Electronic Portable Test Kit

The electronic portable test kit provides a means to complete field tests using secondary injection on all 310+ trip units. The same test kit is also capable of secondary injection testing on Magnum and Series NRX low voltage power circuit breakers' 520 and 1150 trip units.

Electronic Portable Test Kit

Catalog Number
MTST230V

Wire Seal

The wire seal can be used to secure the cover of the trip unit to prevent adjustments after settings are confirmed.

Wire Seal

Catalog Number
5108A03H01

External Accessories and Test Kit

External Accessories

Description	Fit Type	Frame EG	JG	LG	NG	RG
Non-padlockable handle block	Field	**EFHB**	—	—	**LKD4**	—
Padlockable handle block	Field	**EFPHB**	—	—	—	—
Padlockable handle block off-only	Field	**EFPHBOFF**	**FJPHBOFF**	**LBHPOFF**	—	—
Padlockable handle lock hasp	Field	**EFPLK**	**FJPHL**	**LPHL**	**PLK5**	**HLK6**
Padlockable handle lock hasp off-only	Field	**EFPHLOFF**	**FJPHLOFF**	**LPHLOFF**	**PLK55OFF**	**HLK6OFF**
Kirk key interlock kit ①②	Field	—	**KYKJG**	**KYKLG**	**KYK4**	**KYK6**
Castell key interlock kit ②③	Field	—	**CTKJG**	**CTKLG**	**CTK4**	**CTK6**
Slide bar interlock ④	Field	**EFSBI**	**FJSBI**	**LGSBI**	**SBK5**	—
Walking beam interlock ④	Three-pole	**EG3WBI**	**JG3WBI**	**LG3WBI**	**WBL5**	**WBL6**
	Four-pole	**EG4WBI**	**JG4WBI**	**LG4WBI**	**WBL5**	—
Electrical operator ⑤	120 Vac	**MOPEG240C**	**MOPJG120C**	**MOPLG120C**	**EOP5T07**	**EOP6T08K**
	240 Vac	**MOPEG240C**	**MOPJG240C**	**MOPLG240C**	**EOP5T11**	**EOP6T11K**
	24 Vdc	**MOPEG48D**	**MOPJG24D**	**MOPLG24D**	**EOP5T21**	—
	48 Vdc	**MOPEG48D**	—	—	**EOP5T22**	**EOP6T21K**
	125 Vdc	**MOPEG120C**	**MOPJG120C**	**MOPLG120C**	**EOP5T26**	—
	220 Vdc	—	**MOPJG240C**	**MOPLG240C**	—	—
	250 Vdc	—	**MOPJG240C**	**MOPLG240C**	—	—
Plug-in adapters	Three-pole	**PAD3E**	**PAD3J**	**PAD3L**	**PAD53**	—
	Four-pole	**PAD4E**	**PAD4J**	**PAD4L**	—	—
Wohner busbar adapter	Field top	**EG-BUS-T**	**JG-BUS-TB**	**LG-BUS-TB**	—	—
	Field bottom	**EG-BUS-B**	**JG-BUS-TB**	**LG-BUS-TB**	—	—

Series G MCCB Frames EG, JG, and LG to mount to the SASY 60 mm Wohner Classic System

- UL file # E197132
- Compact design
- UL508 tested and certified using Wohner system with Eaton breakers
- No line side wiring required
- Up to 630 A MCCB
- Reverse feed possible

Wohner Busbar Adapter

Wohner Busbar Adapters

Breaker Frame	Busbar Adapter	Connection Point
EG	**EG-BUS-T**	Top
EG	**EG-BUS-B**	Bottom
JG	**JG-BUS-TB**	Top or bottom
LG	**LG-BUS-TB**	Top or bottom

Notes

① Provision only.
② See **Page V4-T2-316** for bolt projection dimensions.
③ Castell bolt mounting hole must be 10 mm.
④ Requires two breakers.
⑤ Contact Eaton for availability of operators for EG- and NG-Frames before December 2004.

Accessory Configurations for EG–RG Circuit Breakers

2

Internal Accessory Configurations

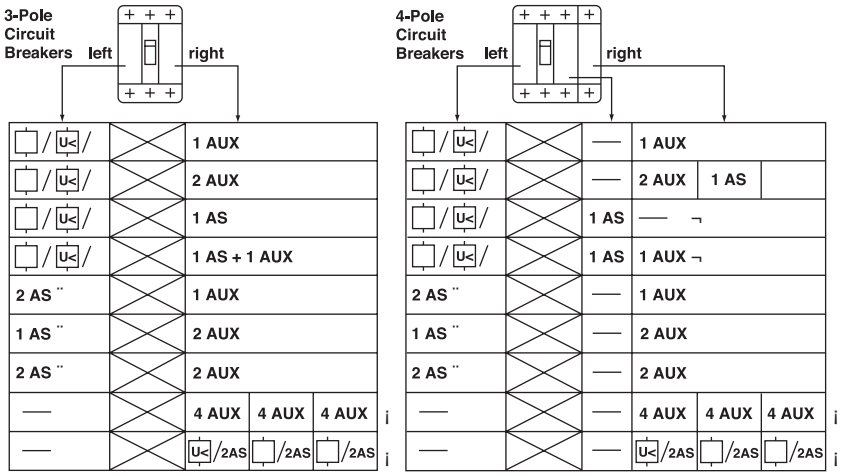

/ U< / = Shunt Trip or Undervoltage Release
AUX = Auxiliary Switch
AS = Alarm Switch
¨ = For N-Frame Circuit Breakers Only
≠ = For R-Frame Circuit Breakers Only
¬ = For N and R-Frame Circuit Breakers Only

Contact Making by the Auxiliary and Alarm Switches as a Function of the Switching Position of the Circuit Breaker

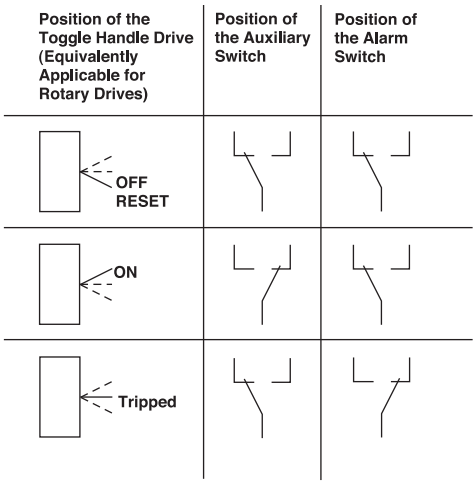

Accessories

Field Fit Kit Catalog Numbers

Alarm Lockout

Description	Pole Location	Frame EG, JG and LG	NG	RG ①
Make/Break	Left	—	**A1L5LPK**	—
	Right	**ALM1M1BEPK** ②	**A1L5RPK**	**A1L6RPK**
2 Make/2 Break	Left	—	**A2L5LPK**	—
	Right	**ALM2M2BEPK** ③	**A2L5RPK**	**A2L6RPK**

Description	Pole Location	For Use in Frame	Contact Type	Catalog Number
Make/Break	Right	EG	Silver	**ALM1M1BEPK**
2 Make/ 2 Break	Right	EG	Silver	**ALM2M2BEPK**
Make/Break	Right	JG and LG	Silver	**ALM1M1BJPK**
2 Make/ 2 Break	Right	JG and LG	Silver	**ALM2M2BJPK**
Make/Break	Right	EG	Gold	**ALM1M1BEEPK**
2 Make/ 2 Break	Right	EG	Gold	**ALM2M2BEEPK**
Make/Break	Right	JG and LG	Gold	**ALM1M1BEJPK**
2 Make/ 2 Break	Right	JG and LG	Gold	**ALM2M2BEJPK**

Auxiliary Switch

Description	Pole Location	Frame EG, JG and LG	NG	RG ①
1A, 1B	Left	—	**A1X5PK**	—
	Right	**AUX1A1BPK**	**A1X5PK**	—
2A, 2B	Left	—	**A2X5PK**	—
	Right	**AUX2A2BPK**	**A2X5PK**	**A2X6RPK**
3A, 3B	Left	—	**A3X5LPK**	—
	Right	—	**A3X5RPK**	—
4A, 4B	Left	—	—	—
	Right	—	—	**A4X6RPK**

Description	Pole Location	For Use in Frame	Contact Type	Catalog Number
1A, 1B	Right	EG/JG/LG	Silver	**AUX1A1BPK**
2A, 2B	Right	EG/JG/LG	Silver	**AUX2A2BPK**
1A, 1B	Right	EG/JG/LG	Gold	**AUX1E1BPK**
2A, 2B	Right	EG/JG/LG	Gold	**AUX2E2BPK**

Auxiliary Switch/Alarm Lockout

Description	Pole Location	Frame EG, JG and LG	NG	RG ①
—	Left	—	**AA115LPK**	—
	Right	**AUXALRMEPK** ④	**AA115RPK**	—

Description	Pole Location	For Use in Frame	Contact Type	Catalog Number
1A/1B & 1M/1B	Right	EG	Silver	**AUXALRMEPK**
1A/1B & 1M/1B	Right	JG and LG	Silver	**AUXALRMJPK**
1A/1B & 1M/1B	Right	EG	Gold	**AUXALRMEEPK**
1A/1B & 1M/1B	Right	JG and LG	Gold	**AUXALRMEJPK**

Notes

① All accessories mount in the RH cavity which will accept one each of shunt trip, UVR, auxiliary switch and alarm switch.
② Part number for JG and LG is ALM1M1BJPK.
③ Part number for JG and LG is ALM2M2BJPK.
④ Part number for JG and LG is AUXALRMJPK.

Shunt Trip—Standard

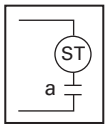

Shunt Trip—Standard

Description	Pole Location	Frame EG, JG and LG ①	NG	RG ②
48–60 Vac	Left	**SNT4860CPK**	**SNT5LP05K**	—
	Right	—	—	**SNT6P05K**
110–240 Vac	Left	**SNT120CPK**	**SNT5LP11K**	—
	Right	—	—	**SNT6P11K**
380–600 Vac	Left	**SNT480CPK** ③	—	—
	Right	—	—	—
220–250 Vdc or 380–440 Vac		—	**SNT5LP14K**	**SNT6P14K**
480–600 Vac		—	**SNT5LP18K**	**SNT6P18K**
12 Vdc	Left	**SNT012CPK**	—	—
	Right	—	—	—
24 Vac/dc	Left	**SNT024CPK**	**SNT5LP03K**	—
	Right	—	—	**SNT6P03K**
48–60 Vdc	Left	**SNT4860CPK**	**SNT5LP23K**	—
	Right	—	—	**SNT6P23K**
110–125 Vdc	Left	**SNT125DPK**	**SNT5LP26K**	—
	Right	—	—	**SNT6P26K**
250 Vdc	Left	**SNT250DPK**	—	—
	Right	—	—	—

Shunt Trip—Low Energy

Description	Pole Location	Frame EG, JG and LG	NG	RG ②
—	Left	—	**LST5LPK**	—
	Right	—	—	**LST6RPK**

Undervoltage Release Mechanism

Description	Pole Location	Frame EG, JG and LG ①	NG	RG ②
110–127 Vac	Left	**UVR120APK**	**UVH5LP08K**	—
	Right	—	—	**UVH6RP08K**
208–240 Vac	Left	**UVR240APK**	**UVH5LP11K**	—
	Right	—	—	**UVH6RP11K**
24 Vdc	Left	**UVR024DPK**	**UVH5LP21K** ④	—
	Right	—	—	**UVH6RP21K** ④
24 Vac	Left	**UVR024APK**	**UVH5LP21K** ④	—
	Right	—	—	**UVH6RP21K** ④
48–60 Vdc	Left	**UVR048DPK**	**UVH5LP23K**	—
	Right	—	—	**UVH6RP23K**
48–60 Vac	Left	**UVR048APK**	**UVH5LP05K**	—
	Right	—	—	**UVH6RP05K**
120 Vdc	Left	**UVR125DPK**	**UVH5LP26K**	—
	Right	—	—	**UVH6RP26K**
220–250 Vdc	Left	**UVR250DPK**	**UVH5LP28K**	—
	Right	—	—	**UVH6RP28K**
380–500 Vac	Left	**UVR480APK**	**UVH5LP29K**	—
	Right	—	—	**UVH6RP29K**
525–600 Vac	Left	**UVR600APK**	—	—
	Right	—	—	—
12 Vdc	Left	—	**UVH5LP20K**	—
	Right	—	—	**UVH6RP20K**
12 Vac	Left	—	**UVH5LP02K**	—
	Right	—	—	**UVH6RP02K**

Notes

① LH cavity not available for EG frame with earth leakage module.
② All accessories mount in the RH cavity which will accept one each of shunt trip, UVR, auxiliary switch and alarm switch.
③ 380–600 Vdc, 50/60 Hz.
④ 24 Vdc only use UVH5LP03K (NG) UVH6RP03K (RG) for 24 Vac.

Technical Data and Specifications

Note: Gold-plated contacts are well suited for switching low voltages and currents. Lead wires on accessories containing gold-plated contacts are marked with a yellow stripe.

Series G Gold Contact Accessory Switch Electrical Ratings

Max. Voltage (Ue)	Frequency	Max. Current (I_n)	Dielectric Withstand Voltage (UI)
125 V	50/60 Hz	0.1 A	2200 V
30 V	DC	0.25 A	2200 V
5 V	DC	5 mA	2200 V

Series G Silver Contact Accessory Switch Electrical Ratings

Max. Voltage (Ue)	Frequency	Max. Current (I_n)	Dielectric Withstand Voltage (UI)
600 V	50/60 Hz	2 A	2200 V
125/250 V	50/60 Hz	5 A	2200 V
125 V	DC	1 A	2200 V

Series G Motor Operators

Contents

Description	*Page*
EG-Frame (15–125 Amperes)	**V4-T2-15**
JG-Frame (63–250 Amperes)	**V4-T2-29**
LG-Frame (250–630 Amperes)	**V4-T2-47**
NG-Frame (320–1200 Amperes)	**V4-T2-65**
RG-Frame (800–2500 Amperes)	**V4-T2-74**
Motor Circuit Protectors (MCP)	**V4-T2-85**
Motor Protector Circuit Breakers (MPCB)	**V4-T2-89**
30 mA Ground Fault (Earth Leakage) Module	**V4-T2-92**
Current Limiting Circuit Breaker Module	**V4-T2-96**
High Instantaneous Circuit Breaker for Selective Coordination	**V4-T2-101**
Special Features and Accessories	**V4-T2-104**
Motor Operators	
Features, Benefits and Functions	**V4-T2-113**
Standards and Certifications	**V4-T2-113**
Product Selection	**V4-T2-113**
Plug-In Blocks	**V4-T2-114**
Drawout Cassette	**V4-T2-115**

Motor Operators

Product Description

Eaton's motor operator mechanism enables local and remote ON, OFF and reset switching of a circuit breaker. The motor operator is mounted on the circuit breaker cover within the dimensions of the circuit breaker.

The robust motor operators offer various voltages to maximize customer flexibility. Standard load transfer switching can be accomplished through the use of two circuit breakers fitted with motor operators and a mechanical interlock.

Features, Benefits and Functions

The motor operator provides special features for ease of customer use and status indication.

- The motor operator allows the circuit breaker to be opened, closed or reset remotely
- The motor operator contains a motor connected to a cam drive mechanism. The cam drives a slide mechanism to operate the circuit breaker handle
- Internal limit switches and relays are used to control motor operation to prevent overdriving the circuit breaker handle and motor overload conditions
- A key is provided to manually operate the circuit breaker
- A special pull-out locking mechanism provides a method for padlocking the circuit breaker handle in the OFF position
- The locking device will accept three padlock shackles with a maximum diameter of 1/4-inch (6.4 mm) each
- The cover provides visual status of the circuit breaker: ON, OFF or TRIPPED. A PUSH-TO-TRIP button allows the user to manually trip the breaker

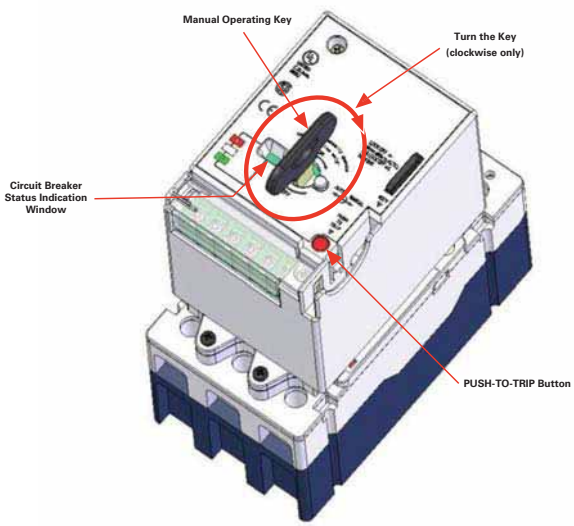

Standards and Certifications

The motor operators are UL and CSA listed, and CE marked.

Listed

Product Selection

Motor Operators

Frame	Voltage	Frequency	Inrush Current	Catalog Number
Series G E-Frame	100–240 Vac	50/60 Hz	1A	**MOPEG240C**
	100–220 Vdc	DC	1A	**MOPEG240C**
	24/48 Vdc	DC	3A	**MOPEG48D**
Series C F-Frame	208–240 Vac	50/60 Hz	1A	**MOPFD240C**
	110–127 Vac	50/60 Hz	1A	**MOPFD120C**
	220–250 Vdc	DC	1A	**MOPFD240C**
	110–125 Vdc	DC	1A	**MOPFD120C**
	24 Vdc	DC	3A	**MOPFD24D**
Series G J-Frame	208–240 Vac	50/60 Hz	1A	**MOPJG240C**
	110–127 Vac	50/60 Hz	1A	**MOPJG120C**
	220–250 Vdc	DC	1A	**MOPJG240C**
	110–125 Vdc	DC	1A	**MOPJG120C**
	24 Vdc	DC	3A	**MOPJG24D**
Series G L-Frame	208–240 Vac	50/60 Hz	2A	**MOPLG240C**
	110–127 Vac	50/60 Hz	2A	**MOPLG120C**
	220–250 Vdc	DC	2A	**MOPLG240C**
	110–125 Vdc	DC	2A	**MOPLG120C**
	24 Vdc	DC	6A	**MOPLG24D**

LG Breaker with Plug-In Block

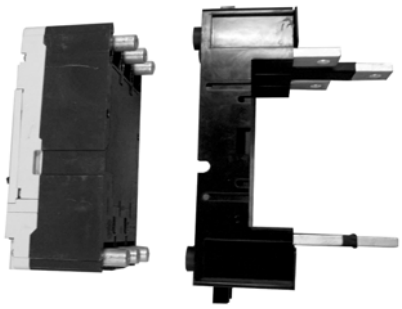

Contents

Description	*Page*
EG-Frame (15–125 Amperes)	**V4-T2-15**
JG-Frame (63–250 Amperes)	**V4-T2-29**
LG-Frame (250–630 Amperes)	**V4-T2-47**
NG-Frame (320–1200 Amperes)	**V4-T2-65**
RG-Frame (800–2500 Amperes)	**V4-T2-74**
Motor Circuit Protectors (MCP)	**V4-T2-85**
Motor Protector Circuit Breakers (MPCB)	**V4-T2-89**
30 mA Ground Fault (Earth Leakage) Module	**V4-T2-92**
Current Limiting Circuit Breaker Module	**V4-T2-96**
High Instantaneous Circuit Breaker for Selective Coordination	**V4-T2-101**
Special Features and Accessories	**V4-T2-104**
Motor Operators	**V4-T2-112**
Plug-In Blocks Drawout Cassette	**V4-T2-115**

Plug-In Blocks

Product Description

Plug-in adapters simplify installation and front removal of circuit breakers. Plug-ins are available for rear connection applications on three- and four-pole circuit breakers. Trip on drawout interlock kits are included. Stabs for EG, JG and LG plug-ins rotate 90 ° for flexible installation. Use terminal shields for IP30 protection.

Product Selection

Plug-In Blocks

Breaker Frame	Number of Poles	Catalog Number
EG-, JG- and LG-Frame Plug-In Blocks		
EG	3	**PAD3E**
EG	4	**PAD4E**
JG	3	**PAD3J**
JG	4	**PAD4J**
LG	3	**PAD3L**
LG	4	**PAD4L**
Trip-On Drawout Interlock Kit ①		
EG	3, 4	**PIILEG**
JG	3, 4	**PIILJG**
LG	3, 4	**PIILLG**
Terminal Shields IP30		
EG	3	**EFTS3K**
EG	4	**EFTS4K**
JG	3	**FJTS3K**
JG	4	**FJTS4K**
LG	3	**LTS3K**
LG	4	**LTS4K**

Note

① Included with plug-in block. Trips the breaker when breaker is removed from plug-in block.

Drawout Cassettes

Contents

Description	*Page*
EG-Frame (15–125 Amperes)	**V4-T2-15**
JG-Frame (63–250 Amperes)	**V4-T2-29**
LG-Frame (250–630 Amperes)	**V4-T2-47**
NG-Frame (320–1200 Amperes)	**V4-T2-65**
RG-Frame (800–2500 Amperes)	**V4-T2-74**
Motor Circuit Protectors (MCP)	**V4-T2-85**
Motor Protector Circuit Breakers (MPCB)	**V4-T2-89**
30 mA Ground Fault (Earth Leakage) Module	**V4-T2-92**
Current Limiting Circuit Breaker Module	**V4-T2-96**
High Instantaneous Circuit Breaker for Selective Coordination	**V4-T2-101**
Special Features and Accessories	**V4-T2-104**
Motor Operators	**V4-T2-112**
Plug-In Blocks	**V4-T2-114**
Drawout Cassette	

Drawout Cassette

Product Description

The drawout cassette is available for use with JG, LG and NG, three- and four-pole breakers. The cassettes consist of two separate components: the movable mechanism, which attaches to the breaker, and the stationary mechanism, which houses in the cassette. For the JG, LG and NG drawout cassettes, all necessary parts for installation are included in the one catalog number.

Features

Features of the drawout cassettes for the JG, LG and NG include:

- Trip on drawout—breaker will trip if it is in the ON position when withdrawn from the cassette
- Secondary terminal block—the drawout cassettes include a secondary terminal block for easier access when wiring low voltage accessories, including shunts and undervoltage releases

The drawout mechanism has three primary positions:

- Connected—the breaker is fully connected to the primary stabs and secondary contacts
- Disconnected—both the primary stabs and the secondary contacts are disconnected
- Withdraw—the breaker can be removed from the cassette

Product Selection

JG Drawout Cassette

LG Drawout Cassette

JG, LG and NG Drawout Cassettes

Breaker Frame	Number of Poles	Catalog Number
JG	3	**JG3DOM**
	4	**JG4DOM**
LG	3	**LG3DOM**
	4	**LG4DOM**
NG	3	**NG3DOM**
	4	**NG4DOM**

Molded Case Circuit Breaker Product Family

Contents

Description	*Page*
Standards and Certifications	**V4-T2-117**
Quick Reference	**V4-T2-118**
G-Frame (15–100 Amperes)	**V4-T2-121**
F-Frame (10–225 Amperes)	**V4-T2-135**
J-Frame (70–250 Amperes)	**V4-T2-153**
K-Frame (70–400 Amperes)	**V4-T2-161**
L-Frame (125–600 Amperes)	**V4-T2-185**
M-Frame (300–800 Amperes)	**V4-T2-211**
N-Frame (400–1200 Amperes)	**V4-T2-222**
R-Frame (800–2500 Amperes)	**V4-T2-237**
Motor Circuit Protectors (MCP)	**V4-T2-256**
Motor Protection Circuit Breakers (MPCB)	**V4-T2-267**
Type ELC Current Limiter Attachment (Size 0–4)	**V4-T2-269**
Current Limiting Circuit Breaker Module	**V4-T2-270**
Internal Accessories	**V4-T2-273**
External Accessories	**V4-T2-304**

Learn Online Drawings Online

Product Overview

Eaton's molded case circuit breakers are designed to provide circuit protection for low voltage distribution systems. They are described by NEMA as, "... a device for closing and interrupting a circuit between separable contacts under both normal and abnormal conditions," and furthermore as, "... a breaker assembled as an integral unit in a supporting and enclosing housing of insulating material." The National Electrical Code (NEC) describes them as, "A device designed to open and close a circuit by non-automatic means, and to open the circuit automatically on a predetermined overload of current, without injury to itself when properly applied within its rating."

So designed, Eaton circuit breakers protect conductors against overloads and conductors and connected apparatus, such as motors and motor starters, against short circuits.

In low voltage distribution systems, there are many varied applications of molded case circuit breakers.

Eaton offers the most comprehensive family of molded case circuit breakers in the industry.

This section of circuit breakers includes:

- Thermal-magnetic trip breakers
- Electronic rms trip breakers
- Molded case switches
- Motor circuit protectors
- Current limiting breakers
- Special application breakers

Modified Breakers

Eaton breakers can be ordered with internal accessories installed. These modified breakers will be subject to an addition charge.

Special Calibration

Special non-UL-listed calibrations are available for certain ambient temperatures other than 40 °C and for frequencies other than 50/60 Hz or DC. Reduced interrupting ratings will apply for 400 Hz applications.

50 °C Calibration

Add suffix **V** to catalog Number for complete breaker, listed above, when ordering listed ampere ratings for breakers to be used in 50 °C ambients. (No UL label.)

Moisture-Fungus Treatment

All circuit breaker cases are molded from glass-polyester which does not support the growth of fungus. Any parts which are susceptible to the growth of fungus will require special treatment.

Freeze-Tested Circuit Breakers

The circuit breakers may be ordered with freeze testing. This option uses special lubrication and mechanical operation is verified at –40 °C.

Marine Applications

E- to R-Framed circuit breakers can be supplied to meet the following marine specifications:

- U.S. Coast Guard CFR 46; ABS—American Bureau of Shipping; IEEE 45; DNV; Lloyds; and ABS/NVR

These specifications generally require molded case circuit breakers to be supplied with 50 °C ambient, and plug-in adapter kits. When plug-in adapter kits are used, no terminals need be supplied (switchboard applications).

Circuit breakers can also be supplied to meet UL 489 Supplement SA (Marine use) and UL 489 Supplement SB (Naval Use).

UL 489 Supplement SA applies to vessels over 65 feet (19.8 m) in length. Requirements include 40 °C ambient calibration, special labeling, and no use of aluminum conductors or terminals. (No 50 °C.)

- Suffix H08

Or you can choose to add 50 °C ambient but then there is no "UL" mark.

- Suffix VH08

UL 489 Supplement SB requires partial 50 °C ambient calibration, vibration testing, special nameplating and no use of aluminum conductors or terminals. Eaton chooses to always fully calibrate to 50 °C ambient. ("Naval" labeled per UL, and UL now allows 50 °C label here.)

- Suffix VH09

Certified Test Reports

Eaton breakers can be ordered with certified test reports at the time of order entry. Test report documents the thermal and magnetic or electronic tripping characteristics of the individual breaker. Breaker and test report must be ordered together. Add suffix 12 to breaker catalog number and enter separate line item on order for certified test report.

Standards and Certifications

Molded case circuit breakers are designed to conform with the following standards:

- Underwriters Laboratories Inc., Standard UL 489, molded case circuit breakers and circuit breaker enclosures
- National Electrical Manufacturers Association (NEMA) Standards Publication No. AB1-1993, molded case circuit breakers
- Australian Standard AS 2184, molded case circuit breakers
- British Standards Institution Standard BS 4752: Part 1, switchgear and control gear Part 1: circuit breakers
- Canadian Standards Association (CSA) Standard C22.2 No. 5, service entrance and branch circuit breakers
- International Electrotechnical Commission Recommendations IEC 60947-2, circuit breakers
- Japanese T-Mark Standard molded case circuit breakers
- South African Bureau of Standards, Standard SABS 156, Standard Specification for molded case circuit breakers
- Swiss Electro-Technical Association Standard SEV 157-1, safety regulations for circuit breakers
- Union Technique de l'Electricite Standard NF C 63-120, low voltage switchgear and control gear circuit breaker requirements
- Verband Deutscher Elektrotechniker (Association of German Electrical Engineers) Standard VDE 0660, low voltage switchgear and control gear, circuit breakers

Conformance with these standards satisfies most local and international codes, assuming user acceptability and simplified application.

Molded case circuit breakers equal or exceed Federal Specification Classification W-C-375b requirements for the particular class associated with the circuit breaker frame being considered.

Open breakers do not have service entrance ratings. Service entrance rating is part of the enclosure.

Listed

Quick Reference

Industrial Circuit Breakers

G-Frame

Circuit Breaker Type	Continuous Ampere Rating at 40 °C	No. of Poles	Volts AC	Volts DC	Type of Trip ①	Federal Specification W-C-375b	UL Listed Interrupting Ratings (rms Symmetrical Amperes) AC (kA) 120	AC (kA) 120/240	AC (kA) 240	AC (kA) 277	AC (kA) 480	AC (kA) 600	DC (kA) ② 125 ③	DC (kA) ② 250	Page Number
GHB	15–100	1	120	125	N.I.T.U.	11a	65	—	—	—	—	—	14	—	**V4-T2-126**
GHB	15–100	2, 3	240	125/250	N.I.T.U.	11a10b, 11b	—	—	65	—	—	—	—	14	**V4-T2-126**
GHB	15–100	1	277	125	N.I.T.U.	12b, 14b	—	—	—	14	—	—	14	—	**V4-T2-126**
GHB	15–100	2, 3	480Y/277	125/250	N.I.T.U.	15b	—	—	—	14	14	—	—	14	**V4-T2-126**
HGHB	15–30	1	277	125	N.I.T.U.	12c, 13a, 13b	65	—	—	25	—	—	14	—	**V4-T2-126**
GHBS	15–30	1, 2	480Y/277	—	—	—	65	65	—	14	—	—	—	—	**V4-T1-34**
GBHS	15–20	1, 2	600Y/347	—	N.I.T.U.	—	—	—	—	—	—	10	—	—	**V4-T1-34**
GDB	15–50	2	480	125/250	N.I.T.U.	—	—	—	—	—	14	—	—	10	**V4-T2-124**
GDB	15–100	3	480	250	N.I.T.U.	—	—	—	—	—	14	—	—	10	**V4-T2-124**
GD	15–50	2	480	125/250	N.I.T.U.	13b	—	—	65	—	14	—	—	10	**V4-T2-123**
GD	15–100	3	480	250	N.I.T.U.	13b	—	—	65	—	22	—	—	10	**V4-T2-123**
GHC	15–100	1	120	125	N.I.T.U.	12c, 13a	65	—	—	—	—	—	14	—	**V4-T2-131**
GHC	15–100	2, 3	240	125/250	N.I.T.U.	13b	—	—	65		—	—	—	1	**V4-T2-131**
GHC	15–100	1	277	125	N.I.T.U.	12c, 13a	—	—	—	14	—	—	14	—	**V4-T2-131**
GHC	15–100	2, 3	480Y/277	125/250	N.I.T.U.	13b	—	—	—	14	14	—	—	14	**V4-T2-131**
HGHC	15–30	1	277	125	N.I.T.U.	—	65	—	—	25	—	—	14	—	**V4-T2-131**

Notes

① N.I.T.U. is non-interchangeable trip unit and I.T.U. is interchangeable trip unit.
② Two-pole circuit breaker, or two poles of three-pole circuit breaker at 250 Vdc.
③ Single-pole breakers can be applied in DC systems up to 70 A.

F-Frame

Circuit Breaker Type	Continuous Ampere Rating at 40 °C	No. of Poles	Volts AC	Volts DC	Type of Trip ①	Federal Specification W-C-375b	UL Listed Interrupting Ratings (rms Symmetrical Amperes) AC (kA) 120	AC (kA) 120/240	AC (kA) 240	AC (kA) 277	AC (kA) 480	AC (kA) 600	DC (kA) ② 125	DC (kA) ② 250	Page Number
EDB	100–225	2, 3	240	125	N.I.T.U.	—	—	—	22	—	—	—	10	—	**V4-T2-135**
EDS	100–225	2, 3	240	125	N.I.T.U.	—	—	—	42	—	—	—	10	—	**V4-T2-135**
ED	15–225	2, 3	240	125	N.I.T.U.	12b	—	—	65	—	—	—	10	—	**V4-T2-135**
EDH	100–225	2, 3	240	125	N.I.T.U.	14b	—	—	100	—	—	—	10	—	**V4-T2-135**
EDC	100–225	2, 3	240	125	N.I.T.U.	1	—	—	200	—	—	—	10	—	**V4-T2-135**
EHD	15–100	1	277	125	N.I.T.U.	13a	—	—	—	14	—	—	10	—	**V4-T2-135**
EHD	15–100	2, 3	480	250	N.I.T.U.	13b	—	—	18	—	14	—	—	10	**V4-T2-135**
FDB	15–150	2, 3	600	250	N.I.T.U.	18a	—	—	18	—	14	14	—	10	**V4-T2-135**
FDB	15–150	4	600	250	N.I.T.U.	③	—	—	18	—	14	14	—	10	**V4-T2-135**
FD	15–150	1	277	125	N.I.T.U.	13a	—	—	—	35	—	—	10	—	**V4-T2-135**
FD	15–225	2, 3	600	250	N.I.T.U.	22a	—	—	65	—	35	18	—	10	**V4-T2-135**
FD	15–225	4	600	250	N.I.T.U.	③	—	—	65	—	35	18	—	10	**V4-T2-135**
FDE	15–225	3	600	—	N.I.T.U.	—	—	—	65	—	35	18	—	—	**V4-T2-135**
HFD	15–150	1	277	125	N.I.T.U.	13a	—	—	—	65	—	—	10	—	**V4-T2-135**
HFD	15–225	2,3	600	250	N.I.T.U.	22a	—	—	100	—	65	25	—	22	**V4-T2-135**
HFD	15–225	4	600	250	N.I.T.U.	③	—	—	100	—	65	25	—	22	**V4-T2-135**
HFDE	15–225	3	600	—	N.I.T.U.	—	—	—	100	—	65	25	—	—	**V4-T2-135**
FDC ④	15–225	2, 3	600	250	N.I.T.U.	24a	—	—	200	—	100	35	—	22	**V4-T2-135**
FDC ④	15–225	4	600	250	N.I.T.U.	③	—	—	200	—	100	35	—	22	**V4-T2-135**
FDCE ④⑤	15–225	3	600	—	N.I.T.U.	—	—	—	200	—	100	25	—	—	**V4-T2-135**

Notes

① N.I.T.U. is non-interchangeable trip unit and I.T.U. is interchangeable trip unit.
② Two-pole circuit breaker, or two poles of three-pole circuit breaker at 250 Vdc.
③ Not defined in W-C-375b.
④ Current limiting.
⑤ Check with Eaton for availability.

J-Frame

Circuit Breaker Type	Continuous Ampere Rating at 40 °C	No. of Poles	Volts AC	Volts DC	Type of Trip ①	Federal Specification W-C-375b	UL Listed Interrupting Ratings (rms Symmetrical Amperes) AC (kA) 120	120/240	240	277	480	600	DC (kA) ② 125	250	Page Number
JDB	70–250	2, 3	600	250	N.I.T.U.	22a	—	—	65	—	35	18	—	10	**V4-T2-156**
JD	70–250	2, 3, 4	600	250	I.T.U.	22a	—	—	65	—	35	18	—	10	**V4-T2-155**
HJD	70–250	2, 3, 4	600	250	I.T.U.	22a	—	—	100	—	65	25	—	22	**V4-T2-155**
JDC ③	70–250	2, 3, 4	600	250	I.T.U.	22a	—	—	200	—	100	35	—	22	**V4-T2-155**

K-Frame

Circuit Breaker Type	Continuous Ampere Rating at 40 °C	No. of Poles	Volts AC	Volts DC	Type of Trip ①	Federal Specification W-C-375b	UL Listed Interrupting Ratings (rms Symmetrical Amperes) AC (kA) 120	120/240	240	277	480	600	DC (kA) ② 125	250	Page Number
DK	250–400	2, 3	240	250	N.I.T.U.	14b	—	—	65	—	—	—	—	10	**V4-T2-167**
KDB	100–400	2, 3	600	250	N.I.T.U.	23a	—	—	65	—	35	25	—	10	**V4-T2-167**
KD	100–400	2, 3, 4	600	250	I.T.U.	23a	—	—	65	—	35	25	—	10	**V4-T2-164, V4-T2-165, V4-T2-169, V4-T2-172**
CKD	100–400	2, 3, 4	600	250	I.T.U.	23a	—	—	65	—	35	25	—	—	**V4-T2-166, V4-T2-175, V4-T2-177**
HKD	100–400	2, 3, 4	600	250	I.T.U.	23a	—	—	100	—	65	35	—	22	**V4-T2-164, V4-T2-165, V4-T2-169, V4-T2-172**
CHKD	100–400	2, 3, 4	600	250	I.T.U.	23a	—	—	100	—	65	35	—	—	**V4-T2-166, V4-T2-175, V4-T2-177**
KDC ③	100–400	2, 3, 4	600	250	I.T.U.	23a	—	—	200	—	100	65	—	22	**V4-T2-164, V4-T2-165, V4-T2-169, V4-T2-172**

L-Frame

Circuit Breaker Type	Continuous Ampere Rating at 40 °C	No. of Poles	Volts AC	Volts DC	Type of Trip ①	Federal Specification W-C-375b	UL Listed Interrupting Ratings (rms Symmetrical Amperes) AC (kA) 120	120/240	240	277	480	600	DC (kA) ② 125	250	Page Number
LDB	300–600	2, 3	600	250	N.I.T.U.	23a	—	—	65	—	35	25	—	22	**V4-T2-190**
LD	300–600	2, 3, 4	600	250	I.T.U.	23a	—	—	65	—	35	25	—	22	**V4-T2-188, V4-T2-189, V4-T2-194**
CLD	300–600	2, 3, 4	600	250	I.T.U.	23a	—	—	65	—	35	25	—	—	**V4-T2-190, V4-T2-200**
HLD	300–600	2, 3, 4	600	250	I.T.U.	23a	—	—	100	—	65	35	—	25	**V4-T2-188, V4-T2-189, V4-T2-194**
CHLD	300–600	2, 3, 4	600	250	I.T.U.	23a	—	—	100	—	65	35	—	—	**V4-T2-190, V4-T2-200**
LDC ③	300–600	2, 3, 4	600	250	I.T.U.	23a	—	—	200	—	100	50	—	30	**V4-T2-188, V4-T2-189, V4-T2-196**
CLDC ③	300–600	2, 3, 4	600	250	I.T.U.	23a	—	—	200	—	100	50	—	30	**V4-T2-190, V4-T2-202**

M-Frame

Circuit Breaker Type	Continuous Ampere Rating at 40 °C	No. of Poles	Volts AC	Volts DC	Type of Trip ①	Federal Specification W-C-375b	UL Listed Interrupting Ratings (rms Symmetrical Amperes) AC (kA) 120	120/240	240	277	480	600	DC (kA) ② 125	250	Page Number
MDL	300–800	2, 3	600	250	I.T.U.	23a	—	—	65	—	50	25	—	22	**V4-T2-213, V4-T2-215**
CMDL	300–800	2, 3	600	250	I.T.U.	23a	—	—	65	—	50	25	—	—	**V4-T2-215**
HMDL	300–800	2, 3	600	250	I.T.U.	23a	—	—	100	—	65	35	—	25	**V4-T2-213, V4-T2-215**
CHMDL	300–800	2, 3	600	250	I.T.U.	23a	—	—	100	—	65	35	—	—	**V4-T2-215**

Notes

① N.I.T.U. is non-interchangeable trip unit and I.T.U. is interchangeable trip unit.
② Two-pole circuit breaker, or two poles of three-pole circuit breaker at 250 Vdc.
③ Current limiting.

Molded Case Circuit Breaker Product Family

Contents

Description	*Page*
Product Overview	**V4-T2-116**
Standards and Certifications	**V4-T2-117**
Quick Reference	**V4-T2-118**
G-Frame (15–100 Amperes)	
Catalog Number Selection	**V4-T2-122**
Technical Data and Specifications	**V4-T2-122**
F-Frame (10–225 Amperes)	**V4-T2-135**
J-Frame (70–250 Amperes)	**V4-T2-153**
K-Frame (70–400 Amperes)	**V4-T2-161**
L-Frame (125–600 Amperes)	**V4-T2-185**
M-Frame (300–800 Amperes)	**V4-T2-211**
N-Frame (400–1200 Amperes)	**V4-T2-222**
R-Frame (800–2500 Amperes)	**V4-T2-237**
Motor Circuit Protectors (MCP)	**V4-T2-256**
Motor Protection Circuit Breakers (MPCB)	**V4-T2-267**
Type ELC Current Limiter Attachment (Size 0–4)	**V4-T2-269**
Current Limiting Circuit Breaker Module	**V4-T2-270**
Internal Accessories	**V4-T2-273**
External Accessories	**V4-T2-304**

G-Frame (15–100 Amperes)

Product Description

- All two- and three-pole circuit breakers are of the common trip type. On all three-phase delta (240 V) Grounded B phase applications, refer to Eaton
- Single-pole circuit breakers, 15 and 20 amperes. Switching duty rated (SWD) for fluorescent lighting applications
- All G-Frame circuit breakers are suitable for reverse feed use
- HACR rated

Catalog Number Selection

This information is presented only as an aid to understanding catalog numbers. It is not to be used to build catalog numbers for circuit breakers or trip units.

Circuit Breaker/Frame

GD 3 100 K

Circuit Breaker Type	
GD	HGHB
GDB	HGHC
GHB	GHBGFEP
GHC	GHCGFEP
GHQ	

Number of Poles
1 = 1 pole
2 = 2 poles
3 = 3 poles

Trip Amperes		
015	035	070
020	040	080
024	045	090
030	050	100
	060	

Suffix	
K = Molded case switch	**J01**= Fungus proofed
D = Ring type terminals	**R01**= Shock tested
C = Steel collars	**F01**= Freeze tester
V = 122 °F (50 °C)	**HID**= High intensity discharge ①

Technical Data and Specifications

UL 489 Interrupting Capacity Ratings

Circuit Breaker Type	Number of Poles	Interrupting Capacity (kA Symmetrical Amperes) Volts AC (50/60 Hz) 120	240	277	480	480Y/277	Volts DC 125 ②	250 ③④
GDB	2, 3	—	—	—	14	—	—	10
GD	2	—	65	—	14	—	—	10
GD	3	—	65	—	22	—	—	10
GHQ	—	65	—	14	—	—	—	—
GHB	1	65	—	14	—	—	14	—
GHB	2, 3	—	65	—	—	14	14	—
HGHB	1	65	—	25	—	—	14	—
GHC	1	65	—	14	—	—	14	—
GHC	2, 3	—	65	—	—	14	14	—
HGHC	1	65	—	25	—	—	14	—

Terminal Types

For line and load-side. Terminals are UL listed as suitable for wire type and size given below.

Terminal Types

Circuit Breaker Amperes	Terminal Type Material	Screw Head Type	Wire Type	AWG Wire Range	Metric Wire Range (mm^2) ⑤
Standard					
15–20	Clamp (plated steel)	Slotted	Cu/Al	14–10	2.5–4
25–100	Pressure (aluminum body)	Slotted	Cu/Al	10–1/0	4–50
Optional—GD Only					
15–100	Pressure (steel body)	Slotted	Cu	14–3	—

Notes

① HID suffix only applies to the GHB and GHC single-pole, 15–20 A circuit breakers.
② Single-pole breakers can be applied in DC systems up to 70 A.
③ Time constant is 8 milliseconds minimum.
④ Two poles of three-pole circuit breaker.
⑤ Not UL listed sizes.

Typical G-Frame Circuit Breaker

Contents

Description	Page
Product Overview	V4-T2-116
Standards and Certifications	V4-T2-117
Quick Reference	V4-T2-118
G-Frame (15–100 Amperes)	V4-T2-121
F-Frame (10–225 Amperes)	V4-T2-135
J-Frame (70–250 Amperes)	V4-T2-153
K-Frame (70–400 Amperes)	V4-T2-161
L-Frame (125–600 Amperes)	V4-T2-185
M-Frame (300–800 Amperes)	V4-T2-211
N-Frame (400–1200 Amperes)	V4-T2-222
R-Frame (800–2500 Amperes)	V4-T2-237
Motor Circuit Protectors (MCP)	V4-T2-256
Motor Protection Circuit Breakers (MPCB)	V4-T2-267
Type ELC Current Limiter Attachment (Size 0–4)	V4-T2-269
Current Limiting Circuit Breaker Module	V4-T2-270
Internal Accessories	V4-T2-273
External Accessories	V4-T2-304

Type GD Thermal-Magnetic Circuit Breakers with Non-Interchangeable Trip Units (15–100 Amperes)

Product Description

- Cable in, cable out
- Includes mounting hardware and BMHE

Standards and Certifications

- UL/CSA

Listed

Product Selection

Type GD Thermal-Magnetic Circuit Breakers with Non-Interchangeable Trip Units

Maximum Continuous Ampere Rating at 40 °C	480 Vac Maximum, 250 Vdc 14 kAIC at 480 Vac Includes Line and Load Terminals Two-Pole Catalog Number	22 kAIC at 480 Vac Three-Pole Catalog Number	Includes Binding Head Screws and Clamps 10–32 x 0.312 Three-Pole Catalog Number
15	GD2015	GD3015	GD3015D
20	GD2020	GD3020	GD3020D
25	GD2025	GD3025	GD3025D
30	GD2030	GD3030	GD3030D
35	GD2035	GD3035	GD3035D
40	GD2040	GD3040	GD3040D
45	GD2045	GD3045	GD3045D
50	GD2050	GD3050	GD3050D
60	—	GD3060	GD3060D
70	—	GD3070	GD3070D
80	—	GD3080	GD3080D
90	—	GD3090	GD3090D
100	—	GD3100	GD3100D

Type GDB Thermal-Magnetic Circuit Breakers with Non-Interchangeable Trip Units

Maximum Continuous Ampere Rating at 40 °C	480 Vac Maximum, 250 Vdc 14 kAIC at 480 Vac Includes Line and Load Terminals Two-Pole Catalog Number	Three-Pole Catalog Number
15	**GDB2015**	**GDB3015**
20	**GDB2020**	**GDB3020**
25	**GDB2025**	**GDB3025**
30	**GDB2030**	**GDB3030**
35	**GDB2035**	**GDB3035**
40	**GDB2040**	**GDB3040**
45	**GDB2045**	**GDB3045**
50	**GDB2050**	**GDB3050**
60	—	**GDB3060**
70	—	**GDB3070**
80	—	**GDB3080**
90	—	**GDB3090**
100	—	**GDB3100**

Type GD Molded Case Switches

Type GD Molded Case Switches—Three-Pole

Maximum Continuous Ampere Rating at 40 °C	480 Vac Maximum, 250 Vdc Catalog Number (Includes Line and Load Terminals)
60	**GD3060K**
60	**GD3060KC** ①
100	**GD3100K**
100	**GD3100KD** ②

Notes

① Includes line and load steel terminals.

② Includes binding head screws and clamps 10–32 x 0.312.

Molded case switches may open above 1300 amperes.

Dimensions

Approximate Dimensions in Inches (mm)

GD-Frame, Three-Pole

Front View

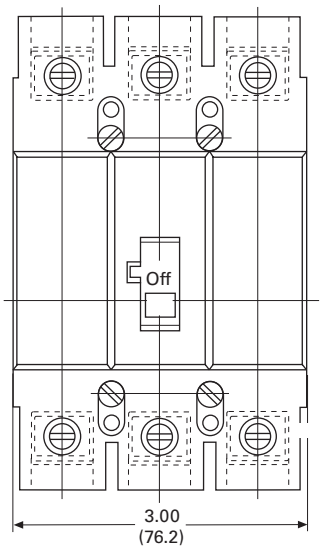

Side View

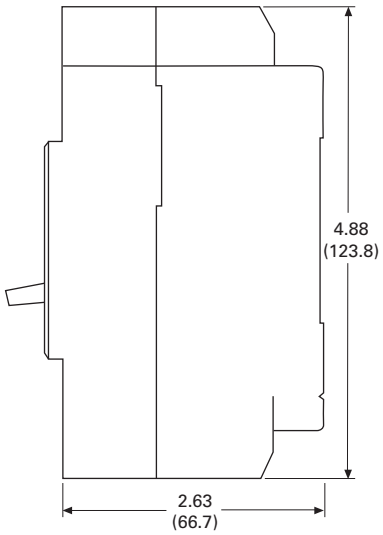

Typical GHB

Contents

Description	*Page*
Product Overview	**V4-T2-116**
Standards and Certifications	**V4-T2-117**
Quick Reference	**V4-T2-118**
G-Frame (15–100 Amperes)	**V4-T2-121**
F-Frame (10–225 Amperes)	**V4-T2-135**
J-Frame (70–250 Amperes)	**V4-T2-153**
K-Frame (70–400 Amperes)	**V4-T2-161**
L-Frame (125–600 Amperes)	**V4-T2-185**
M-Frame (300–800 Amperes)	**V4-T2-211**
N-Frame (400–1200 Amperes)	**V4-T2-222**
R-Frame (800–2500 Amperes)	**V4-T2-237**
Motor Circuit Protectors (MCP)	**V4-T2-256**
Motor Protection Circuit Breakers (MPCB)	**V4-T2-267**
Type ELC Current Limiter Attachment (Size 0–4)	**V4-T2-269**
Current Limiting Circuit Breaker Module	**V4-T2-270**
Internal Accessories	**V4-T2-273**
External Accessories	**V4-T2-304**

Types GHB and HGHB Bolt-On Panelboard Circuit Breakers (15–100 Amperes)

Standards and Certifications

These breakers meet the requirements of Federal Specification W-C-375b as follows:

- Type GHB, 120 and 240 V:
  - Single-pole: Class 11a
  - Two-, three-pole: Classes 10b, 11b, 12b, 14b, 15b
  - UL/CSA
- Type GHB, 277 and 480Y/277V:
  - Single-pole: Classes 12c, 13a
  - Two-, three-pole: Class 13b
  - Type HGHB 277V
  - Type GHQ 277V

Listed

Product Selection

Typical GHB

Type GHB Thermal-Magnetic Circuit Breakers with Non-Interchangeable Trip Units ①

Continuous Ampere Rating at 40 °C	277/480 Vac Maximum, 125 Vdc Maximum ② Single-Pole Catalog Number	277/480 Vac Maximum, 125/250 Vdc Maximum Two-Pole Catalog Number	277/480 Vac Maximum, 125/250 Vdc Maximum ③ Three-Pole Catalog Number
15	GHB1015 ④⑤	GHB2015 ④	GHB3015 ④
20	GHB1020 ④⑤	GHB2020 ④	GHB3020 ④
25	GHB1025	GHB2025	GHB3025
30	GHB1030	GHB2030	GHB3030
35	GHB1035	GHB2035	GHB3035
40	GHB1040	GHB2040	GHB3040
45	GHB1045	GHB2045	GHB3045
50	GHB1050	GHB2050	GHB3050
60	GHB1060	GHB2060	GHB3060
70	GHB1070	GHB2070	GHB3070
80	GHB1080	GHB2080	GHB3080
90	GHB1090	GHB2090	GHB3090
100	GHB1100	GHB2100	GHB3100

Type HGHB Thermal-Magnetic Circuit Breakers with Non-Interchangeable Trip Units

Continuous Ampere Rating at 40 °C	277 Vac Maximum, 125 Vdc Maximum Single-Pole Catalog Number
15	HGHB1015 ⑥
20	HGHB1020 ⑥
25	HGHB1025
30	HGHB1030

Notes

① 480Y/277 V, circuit breakers (Type GHB) not suitable for three-phase delta (480 V).
② Single-pole breakers can be applied in DC systems from 15 through 70 amperes; 80 through 100 amperes devices are not suitable for DC application.
③ Use two outside poles.
④ Uses 0.190 (4.83) –32 screw type clamp terminals.
⑤ Add suffix HID for High Intensity Discharge (HID) applications. 15 and 20 ampere, single-pole are SWD rated.
⑥ 15 and 20 ampere, single-pole are SWD rated.

Dimensions

Approximate Dimensions in Inches (mm)

GDB-Frame, Three-Pole

Front View

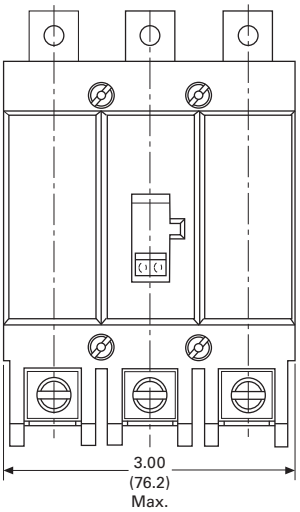

Side View

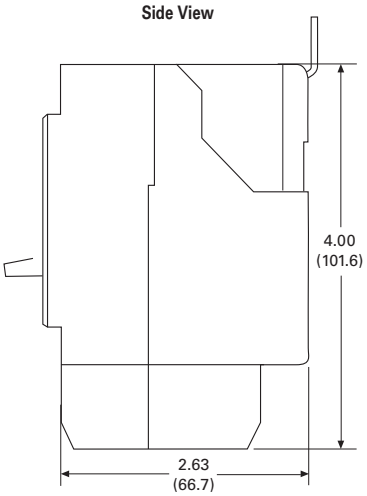

Single-Phase (requires two poles)

Contents

Description	Page
Product Overview	V4-T2-116
Standards and Certifications	V4-T2-117
Quick Reference	V4-T2-118
G-Frame (15–100 Amperes)	V4-T2-121
F-Frame (10–225 Amperes)	V4-T2-135
J-Frame (70–250 Amperes)	V4-T2-153
K-Frame (70–400 Amperes)	V4-T2-161
L-Frame (125–600 Amperes)	V4-T2-185
M-Frame (300–800 Amperes)	V4-T2-211
N-Frame (400–1200 Amperes)	V4-T2-222
R-Frame (800–2500 Amperes)	V4-T2-237
Motor Circuit Protectors (MCP)	V4-T2-256
Motor Protection Circuit Breakers (MPCB)	V4-T2-267
Type ELC Current Limiter Attachment (Size 0–4)	V4-T2-269
Current Limiting Circuit Breaker Module	V4-T2-270
Internal Accessories	V4-T2-273
External Accessories	V4-T2-304

Type GHBGFEP Bolt-On Panelboard 30 mA Industrial Ground Fault Circuit Protectors (15–100 Amperes)

Product Description

- 15–60 amperes, 277 V, 50/60 Hz
- Operational voltage 240 V to 305 V

Standards and Certifications

These circuit breakers meet the requirements of UL 489 and UL 1053.

Listed

Product Selection

Type GHBGFEP Bolt-On Panelboard 30 mA Industrial Ground Fault Circuit Protectors with Non-Interchangeable Trip Units

Continuous Ampere Rating at 40 °C	Single-Phase (Requires Two Poles) 277 Vac, 30 mA Catalog Number
15	**GHBGFEP1015**
20	**GHBGFEP1020**
30	**GHBGFEP1030**
40	**GHBGFEP1040**
50	**GHBGFEP1050**
60	**GHBGFEP1060**

Technical Data and Specifications

Interrupting Capacity Ratings

Circuit Breaker Type	Number of Poles	Interrupting Capacity (Symmetrical Amperes) 277 Vac (50/60 Hz)
GHBGFEP	1	14,000

Dimensions

Approximate Dimensions in Inches (mm)

GHB-Frame, Three-Pole

Front View

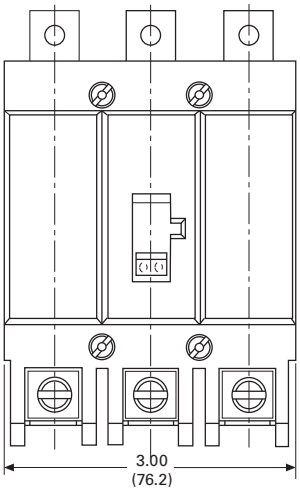

Side View

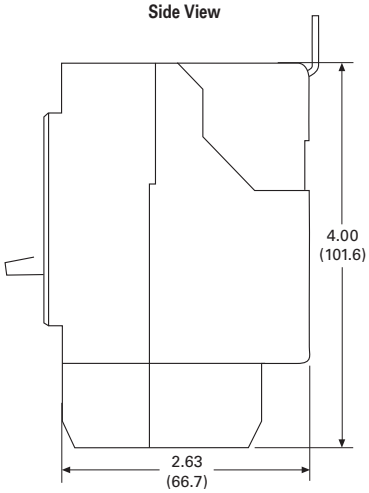

Typical GHC

Contents

Description	*Page*
Product Overview	**V4-T2-116**
Standards and Certifications	**V4-T2-117**
Quick Reference	**V4-T2-118**
G-Frame (15–100 Amperes)	**V4-T2-121**
F-Frame (10–225 Amperes)	**V4-T2-135**
J-Frame (70–250 Amperes)	**V4-T2-153**
K-Frame (70–400 Amperes)	**V4-T2-161**
L-Frame (125–600 Amperes)	**V4-T2-185**
M-Frame (300–800 Amperes)	**V4-T2-211**
N-Frame (400–1200 Amperes)	**V4-T2-222**
R-Frame (800–2500 Amperes)	**V4-T2-237**
Motor Circuit Protectors (MCP)	**V4-T2-256**
Motor Protection Circuit Breakers (MPCB)	**V4-T2-267**
Type ELC Current Limiter Attachment (Size 0–4)	**V4-T2-269**
Current Limiting Circuit Breaker Module	**V4-T2-270**
Internal Accessories	**V4-T2-273**
External Accessories	**V4-T2-304**

Types GHC and HGHC Circuit Breakers (15–100 Amperes)

Product Description

- 15–100 amperes
- 120, 240, 277, 480Y/277V, 50/60 Hz, 125, 125/250 Vdc
- Single-, two- and three-pole
- Cable in, cable out
- Does not include mounting hardware

Standards and Certifications

These breakers meet the requirements of Federal Specification W-C-37b as follows:

- Type GHC, 277 and 480Y/277V:
  - Single-pole: Classes 12c, 13a
  - Two-, three-pole: Class 13b
  - UL/CSA

Listed

Product Selection

Type GHC Thermal-Magnetic Circuit Breakers with Non-Interchangeable Trip Units

Continuous Ampere Rating at 40 °C	277 Vac Maximum, 125 Vdc Maximum ① Single-Pole Catalog Number	480Y/277 Vac Maximum, 125/250 Vdc Maximum Two-Pole Catalog Number	480Y/277 Vac Maximum, 125/250 Vdc Maximum ② Three-Pole Catalog Number
15	**GHC1015** ③④	**GHC2015** ③	**GHC3015** ③
20	**GHC1020** ③④	**GHC2020** ③	**GHC3020** ③
25	**GHC1025**	**GHC2025**	**GHC3025**
30	**GHC1030**	**GHC2030**	**GHC3030**
35	**GHC1035**	**GHC2035**	**GHC3035**
40	**GHC1040**	**GHC2040**	**GHC3040**
45	**GHC1045**	**GHC2045**	**GHC3045**
50	**GHC1050**	**GHC2050**	**GHC3050**
60	**GHC1060**	**GHC2060**	**GHC3060**
70	**GHC1070**	**GHC2070**	**GHC3070**
80	**GHC1080**	**GHC2080**	**GHC3080**
90	**GHC1090**	**GHC2090**	**GHC3090**
100	**GHC1100**	**GHC2100**	**GHC3100**

Type HGHC Thermal-Magnetic Circuit Breakers with Non-Interchangeable Trip Units

Continuous Ampere Rating at 40 °C	277 Vac Maximum, 125 Vdc Maximum Single-Pole Catalog Number
15	**HGHC1015** ⑤
20	**HGHC1020** ⑤
25	**HGHC1025**
30	**HGHC1030**

Notes

① 15 through 70 ampere circuit breakers only.
② Single-pole breakers can be applied in DC systems from 15 through 70 ampere; 80 through 100 ampere devices are not suitable for DC application.
③ Uses 0.190–32 screw type clamp terminals.
④ Add suffix HID for High Intensity Discharge (HID) applications. 15 and 20 ampere, single-pole are SWD rated.
⑤ 15 and 20 ampere, single-pole are SWD rated.

Single-Phase (requires two-pole spaces)

Contents

Description	Page
Product Overview	V4-T2-116
Standards and Certifications	V4-T2-117
Quick Reference	V4-T2-118
G-Frame (15–100 Amperes)	V4-T2-121
F-Frame (10–225 Amperes)	V4-T2-135
J-Frame (70–250 Amperes)	V4-T2-153
K-Frame (70–400 Amperes)	V4-T2-161
L-Frame (125–600 Amperes)	V4-T2-185
M-Frame (300–800 Amperes)	V4-T2-211
N-Frame (400–1200 Amperes)	V4-T2-222
R-Frame (800–2500 Amperes)	V4-T2-237
Motor Circuit Protectors (MCP)	V4-T2-256
Motor Protection Circuit Breakers (MPCB)	V4-T2-267
Type ELC Current Limiter Attachment (Size 0–4)	V4-T2-269
Current Limiting Circuit Breaker Module	V4-T2-270
Internal Accessories	V4-T2-273
External Accessories	V4-T2-304

Type GHCGFEP Cable-In/Cable-Out 30 mA Industrial Ground Fault Circuit Protectors (15–100 Amperes)

Product Description

- 15–60 amperes, 277 V, 50/60 Hz
- Operational voltage 240–305 V

Standards and Certifications

These circuit breakers meet the requirements of UL 489 and UL 1053.

Listed

Product Selection

Type GHCGFEP 30 mA Industrial Ground Fault Circuit Protectors with Non-Interchangeable Trip Units

Continuous Ampere Rating at 40 °C	Single-Phase (Requires Two Poles) 277V, 30 mA Catalog Number
15	GHCGFEP1015
20	GHCGFEP1020
30	GHCGFEP1030
40	GHCGFEP1040
50	GHCGFEP1050
60	GHCGFEP1060

Technical Data and Specifications

Interrupting Capacity Ratings

Circuit Breaker Type	Number of Poles	Interrupting Capacity (Symmetrical Amperes) 277 Vac (50/60 Hz)
GHCGFEP	1	14,000

Special Purpose Circuit Breakers

Contents

Description	*Page*
Product Overview	V4-T2-116
Standards and Certifications	V4-T2-117
Quick Reference	V4-T2-118
G-Frame (15–100 Amperes)	V4-T2-121
F-Frame (10–225 Amperes)	V4-T2-135
J-Frame (70–250 Amperes)	V4-T2-153
K-Frame (70–400 Amperes)	V4-T2-161
L-Frame (125–600 Amperes)	V4-T2-185
M-Frame (300–800 Amperes)	V4-T2-211
N-Frame (400–1200 Amperes)	V4-T2-222
R-Frame (800–2500 Amperes)	V4-T2-237
Motor Circuit Protectors (MCP)	V4-T2-256
Motor Protection Circuit Breakers (MPCB)	V4-T2-267
Type ELC Current Limiter Attachment (Size 0–4)	V4-T2-269
Current Limiting Circuit Breaker Module	V4-T2-270
Internal Accessories	V4-T2-273
External Accessories	V4-T2-304

Special Purpose GHC Circuit Breakers (15–100 Amperes)

Product Description

Eaton's Type GHC circuit breakers have binding head screw-type terminals on line and load side. These circuit breakers with screw-type terminals (0.190–32) will be marked "Special purpose breaker not for general use." To order this special breaker, use the catalog number from the tables on this page.

Product Selection

Type GHC Thermal-Magnetic Circuit Breakers with Non-Interchangeable Trip Units

Continuous Ampere Rating at 40 °C	277 Vac Maximum, 125 Vdc Maximum ① Single-Pole Catalog Number	480Y/277 Vac Maximum, 125/250 Vdc Maximum Two-Pole Catalog Number	480Y/277 Vac Maximum, 125/250 Vdc Maximum ② Three-Pole Catalog Number
25	GHC1025D	GHC2025D	GHC3025D
30	GHC1030D	GHC2030D	GHC3030D
35	GHC1035D	GHC2035D	GHC3035D
40	GHC1040D	GHC2040D	GHC3040D
45	GHC1045D	GHC2045D	GHC3045D
50	GHC1050D	GHC2050D	GHC3050D
60	GHC1060D	GHC2060D	GHC3060D
70	GHC1070D	GHC2070D	GHC3070D
80	GHC1080D	GHC2080D	GHC3080D
90	GHC1090D	GHC2090D	GHC3090D
100	GHC1100D	GHC2100D	GHC3100D

Type GHB and GHC Thermal-Magnetic Circuit Breakers with Non-Interchangeable Trip Units for HID Lighting Applications

Type	Continuous Ampere Rating at 40 °C	277 Vac Maximum Single-Pole Catalog Number
Cable-in	15	GHC1015HID
	20	GHC1020HID
Bolt-on	15	GHB1015HID
	20	GHB1020HID

Notes

① Single-pole breakers can be applied in DC systems from 15 through 70 amperes; 80 through 100 amperes devices are not suitable for DC application.

② Use two outside poles.

Typical F-Frame Breaker
F-Frame Breaker with Electronic Trip Unit

Contents

Description	*Page*
Product Overview	**V4-T2-116**
Standards and Certifications	**V4-T2-117**
Quick Reference	**V4-T2-118**
G-Frame (15–100 Amperes)	**V4-T2-121**
F-Frame (10–225 Amperes)	
Catalog Number Selection	**V4-T2-136**
Product Selection	**V4-T2-138**
Accessories	**V4-T2-149**
Technical Data and Specifications	**V4-T2-150**
Dimensions and Weights	**V4-T2-152**
J-Frame (70–250 Amperes)	**V4-T2-153**
K-Frame (70–400 Amperes)	**V4-T2-161**
L-Frame (125–600 Amperes)	**V4-T2-185**
M-Frame (300–800 Amperes)	**V4-T2-211**
N-Frame (400–1200 Amperes)	**V4-T2-222**
R-Frame (800–2500 Amperes)	**V4-T2-237**
Motor Circuit Protectors (MCP)	**V4-T2-256**
Motor Protection Circuit Breakers (MPCB)	**V4-T2-267**
Type ELC Current Limiter Attachment (Size 0–4)	**V4-T2-269**
Current Limiting Circuit Breaker Module	**V4-T2-270**
Internal Accessories	**V4-T2-273**
External Accessories	**V4-T2-304**

F-Frame (10–225 Amperes)

Product Description

- All Eaton's F-Frame circuit breakers are HACR rated
- All circuit breakers 10 through 30 amperes are suitable for HID (high intensity discharge) use
- All F-Frame circuit breakers are suitable for reverse feed use

Catalog Number Selection

This information is presented only as an aid to understanding catalog numbers. It is not to be used to build catalog numbers for circuit breakers or trip units.

FD-Frame Circuit Breakers with Thermal-Magnetic Trip Unit Technology

FDC 3 100 L

Circuit Breaker Type
EHD
FDB
FD
HFD
FDC

Number of Poles
1 = 1 pole
2 = 2 poles
3 = 3 poles
4 = 4 poles

Trip Amperes
010
015
020
025
030
035
040
045
050
060
070
080
090
100
110
125
150
175 (FD, HFD, FDC, two-, three-, four-pole only)
200 (FD, HFD, FDC, two-, three-, four-pole only)
225 (FD, HFD, FDC, two-, three-, four-pole only)

Suffix
E = 100% protected (four-pole only) neutral pole
EH = 50% protected (four-pole only)
K = High magnetic molded case switch
L = Line and load terminals
S = Stainless steel terminals
V = 50 °C calibration
W = Without terminals
Y = Line terminals only
Z = Aluminum terminals (≤100 amperes)

EDC 3 200 L

Circuit Breaker Type
EDB
EDS
ED
EDH
EDC

Number of Poles
2 = 2 poles
3 = 3 poles

Trip Amperes
100
125
150
175
200
225

Suffix
L = Line and load terminals
W = Without terminals
Y = Line terminals only
Z = Aluminum terminals (100 amperes)

This information is presented only as an aid to understanding catalog numbers.
It is not to be used to build catalog numbers for circuit breakers or trip units.

FD-Frame Circuit Breakers with 210+ Electronic Trip Unit Technology

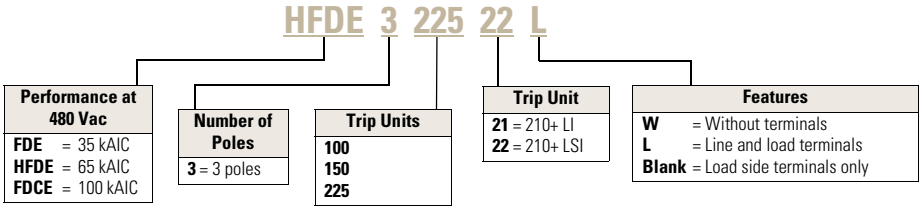

FD-Frame Circuit Breakers with 310+ Electronic Trip Unit Technology

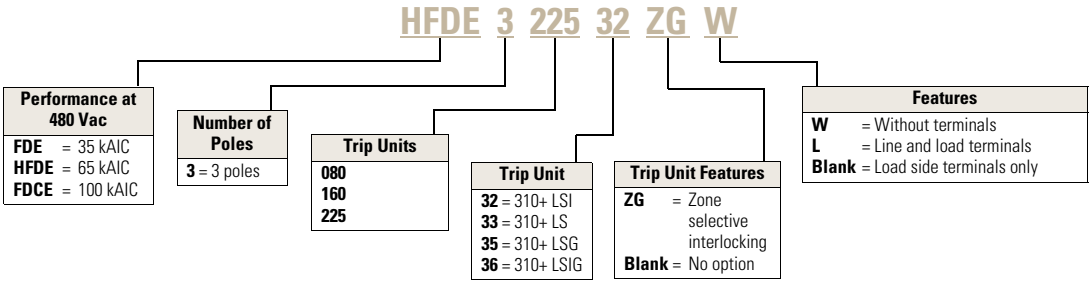

Product Selection

Type ED Thermal-Magnetic Circuit Breakers with Non-Interchangeable Trip Units Suitable for Reverse Feed

	240 Vac Maximum, 125 Vdc (Includes Terminals on Load End Only) 65 kAIC at 240 Vac	
	Two-Pole	Three-Pole
Maximum Continuous Ampere Rating at 40 °C	Catalog Number	Catalog Number
15	ED2015	ED3015
20	ED2020	ED3020
25	ED2025	ED3025
30	ED2030	ED3030
35	ED2035	ED3035
40	ED2040	ED3040
50	ED2050	ED3050
60	ED2060	ED3060
100	ED2100	ED3100
125	ED2125	ED3125
150	ED2150	ED3150
175	ED2175	ED3175
200	ED2200	ED3200
225	ED2225	ED3225

Type EDH Thermal-Magnetic Circuit Breakers with Non-Interchangeable Trip Units Suitable for Reverse Feed

	240 Vac Maximum, 125 Vdc (Includes Terminals on Load End Only) 100 kAIC at 240 Vac	
	Two-Pole	Three-Pole
Maximum Continuous Ampere Rating at 40 °C	Catalog Number	Catalog Number
15	—	—
20	—	—
25	—	—
30	—	—
35	—	—
40	—	—
50	—	—
60	—	—
100	EDH2100	EDH3100
125	EDH2125	EDH3125
150	EDH2150	EDH3150
175	EDH2175	EDH3175
200	EDH2200	EDH3200
225	EDH2225	EDH3225

Type EDC Thermal-Magnetic Circuit Breakers with Non-Interchangeable Trip Units Suitable for Reverse Feed

	240 Vac Maximum, 125 Vdc (Includes Terminals on Load End Only) 200 kAIC at 240 Vac	
	Two-Pole	Three-Pole
Maximum Continuous Ampere Rating at 40 °C	Catalog Number	Catalog Number
15	—	—
20	—	—
25	—	—
30	—	—
35	—	—
40	—	—
50	—	—
60	—	—
100	**EDC2100**	**EDC3100**
125	**EDC2125**	**EDC3125**
150	**EDC2150**	**EDC3150**
175	**EDC2175**	**EDC3175**
200	**EDC2200**	**EDC3200**
225	**EDC2225**	**EDC3225**

Type EDB Thermal-Magnetic Circuit Breakers with Non-Interchangeable Trip Units Suitable for Reverse Feed

	240 Vac Maximum, 125 Vdc (Includes Terminals on Load End Only) 22 kAIC at 240 Vac	
	Two-Pole	Three-Pole
Maximum Continuous Ampere Rating at 40 °C	Catalog Number	Catalog Number
100	**EDB2100**	**EDB3100**
110	**EDB2110**	**EDB3110**
125	**EDB2125**	**EDB3125**
150	**EDB2150**	**EDB3150**
175	**EDB2175**	**EDB3175**
200	**EDB2200**	**EDB3200**
225	**EDB2225**	**EDB3225**

Type EDS Thermal-Magnetic Circuit Breakers with Non-Interchangeable Trip Units Suitable for Reverse Feed

	240 Vac Maximum, 125 Vdc (Includes Terminals on Load End Only) 42 kAIC at 240 Vac	
	Two-Pole	Three-Pole
Maximum Continuous Ampere Rating at 40 °C	Catalog Number	Catalog Number
100	EDS2100	EDS3100
110	EDS2110	EDS3110
125	EDS2125	EDS3125
150	EDS2150	EDS3150
175	EDS2175	EDS3175
200	EDS2200	EDS3200
225	EDS2225	EDS3225

Type EHD Thermal-Magnetic Circuit Breakers with Non-Interchangeable Trip Units (Includes Terminals on Load End Only)

	277 Vac Maximum, 125 Vdc 14 kAIC at 277 Vac	480 Vac Maximum, 250 Vdc 14 kAIC at 480 Vac	
	Single-Pole	Two-Pole	Three-Pole
Maximum Continuous Ampere Rating at 40 °C	Catalog Number	Catalog Number	Catalog Number
10 ①	EHD1010	EHD2010	EHD3010
15	EHD1015 ②	EHD2015	EHD3015
20	EHD1020 ②	EHD2020	EHD3020
25	EHD1025	EHD2025	EHD3025
30	EHD1030	EHD2030	EHD3030
35	EHD1035	EHD2035	EHD3035
40	EHD1040	EHD2040	EHD3040
45	EHD1045	EHD2045	EHD3045
50	EHD1050	EHD2050	EHD3050
60	EHD1060	EHD2060	EHD3060
70	EHD1070	EHD2070	EHD3070
80	EHD1080	EHD2080	EHD3080
90	EHD1090	EHD2090	EHD3090
100	EHD1100	EHD2100	EHD3100

Notes

① Not UL listed. 5 kAIC interrupting rating.

② UL listed for SWD applications, see NEC Article 240.83(d).

Type FDB Thermal-Magnetic Circuit Breakers with Non-Interchangeable Trip Units (Includes Terminals on Load End Only)

	600 Vac Maximum, 250 Vdc 14 kAIC at 600 Vac		
	Two-Pole	Three-Pole	Four-Pole
Maximum Continuous Ampere Rating at 40 °C	Catalog Number	Catalog Number	Catalog Number
10 ①	FDB2010	FDB3010	FDB4010
15	FDB2015	FDB3015	FDB4015
20	FDB2020	FDB3020	FDB4020
25	FDB2025	FDB3025	FDB4025
30	FDB2030	FDB3030	FDB4030
35	FDB2035	FDB3035	FDB4035
40	FDB2040	FDB3040	FDB4040
45	FDB2045	FDB3045	FDB4045
50	FDB2050	FDB3050	FDB4050
60	FDB2060	FDB3060	FDB4060
70	FDB2070	FDB3070	FDB4070
80	FDB2080	FDB3080	FDB4080
90	FDB2090	FDB3090	FDB4090
100	FDB2100	FDB3100	FDB4100
110	FDB2110	FDB3110	FDB4110
125	FDB2125	FDB3125	FDB4125
150	FDB2150	FDB3150	FDB4150

Notes

① Not UL listed. 5 kAIC interrupting rating.

② UL listed for SWD applications, see NEC Article 240.83(d).

Type FD Thermal-Magnetic Circuit Breakers with Non-Interchangeable Trip Units (Includes Terminals on Load End Only)

	277 Vac Maximum, 125 Vdc 35 kAIC at 277 Vac	600 Vac Maximum, 250 Vdc 35 kAIC at 480 Vac		
	Single-Pole	Two-Pole	Three-Pole	Four-Pole
Maximum Continuous Ampere Rating at 40 °C	Catalog Number	Catalog Number	Catalog Number	Catalog Number
10 ①	FD1010	—	—	—
15	FD1015 ②	FD2015	FD3015	FD4015
20	FD1020 ②	FD2020	FD3020	FD4020
25	FD1025	FD2025	FD3025	FD4025
30	FD1030	FD2030	FD3030	FD4030
35	FD1035	FD2035	FD3035	FD4035
40	FD1040	FD2040	FD3040	FD4040
45	FD1045	FD2045	FD3045	FD4045
50	FD1050	FD2050	FD3050	FD4050
60	FD1060	FD2060	FD3060	FD4060
70	FD1070	FD2070	FD3070	FD4070
80	FD1080	FD2080	FD3080	FD4080
90	FD1090	FD2090	FD3090	FD4090
100	FD1100	FD2100	FD3100	FD4100
110	FD1110	FD2110	FD3110	FD4110
125	FD1125	FD2125	FD3125	FD4125
150	FD1150	FD2150	FD3150	FD4150
175	—	FD2175	FD3175	FD4175
200	—	FD2200	FD3200	FD4200
225	—	FD2225	FD3225	FD4225

Notes

① Not UL listed. 5 kAIC interrupting rating.

② UL listed for SWD applications, see NEC Article 240.83(d).

Type HFD Thermal-Magnetic Circuit Breakers with Non-Interchangeable Trip Units (Includes Terminals on Load End Only)

	277 Vac Maximum, 125 Vdc	600 Vac Maximum, 250 Vdc		
	65 kAIC at 277 Vac	65 kAIC at 480 Vac		
	Single-Pole	Two-Pole	Three-Pole	Four-Pole
Maximum Continuous Ampere Rating at 40 °C	Catalog Number	Catalog Number	Catalog Number	Catalog Number
15	HFD1015 ①	HFD2015	HFD3015	HFD4015
20	HFD1020 ①	HFD2020	HFD3020	HFD4020
25	HFD1025	HFD2025	HFD3025	HFD4025
30	HFD1030	HFD2030	HFD3030	HFD4030
35	HFD1035	HFD2035	HFD3035	HFD4035
40	HFD1040	HFD2040	HFD3040	HFD4040
45	HFD1045	HFD2045	HFD3045	HFD4045
50	HFD1050	HFD2050	HFD3050	HFD4050
60	HFD1060	HFD2060	HFD3060	HFD4060
70	HFD1070	HFD2070	HFD3070	HFD4070
80	HFD1080	HFD2080	HFD3080	HFD4080
90	HFD1090	HFD2090	HFD3090	HFD4090
100	HFD1100	HFD2100	HFD3100	HFD4100
110	HFD1110	HFD2110	HFD3110	HFD4110
125	HFD1125	HFD2125	HFD3125	HFD4125
150	HFD1150	HFD2150	HFD3150	HFD4150
175	—	HFD2175	HFD3175	HFD4175
200	—	HFD2200	HFD3200	HFD4200
225	—	HFD2225	HFD3225	HFD4225

Note

① UL listed for SWD applications, see NEC Article 240.83(d).

Type FDC Thermal-Magnetic Circuit Breakers with Non-Interchangeable Trip Units (Includes Terminals on Load End Only)

	600 Vac Maximum, 250 Vdc 100 kAIC at 480 Vac		
	Two-Pole	Three-Pole	Four-Pole
Maximum Continuous Ampere Rating at 40 °C	Catalog Number	Catalog Number	Catalog Number
15	FDC2015	FDC3015	FDC4015
20	FDC2020	FDC3020	FDC4020
25	FDC2025	FDC3025	FDC4025
30	FDC2030	FDC3030	FDC4030
35	FDC2035	FDC3035	FDC4035
40	FDC2040	FDC3040	FDC4040
45	FDC2045	FDC3045	FDC4045
50	FDC2050	FDC3050	FDC4050
60	FDC2060	FDC3060	FDC4060
70	FDC2070	FDC3070	FDC4070
80	FDC2080	FDC3080	FDC4080
90	FDC2090	FDC3090	FDC4090
100	FDC2100	FDC3100	FDC4100
110	FDC2110	FDC3110	FDC4110
125	FDC2125	FDC3125	FDC4125
150	FDC215	FDC3150	FDC4150
175	FDC2175	FDC3175	FDC4175
200	FDC2200	FDC3200	FDC4200
225	FDC2225	FDC3225	FDC4225

Types FDE, HFDE and FDCE 310+ Electronic Circuit Breakers with Non-Interchangeable Trip Units

See 310+ adjustability specifications on **Page V4-T2-151**.

	Digitrip RMS 310+ Trip Unit Only				
	Standard	Optional			
	LS	LSI	LSG	LSIG	
Maximum Ampere Rating	Adjustable Short Time Pickup with I^2t Short Delay Ramp Catalog Number	Independently Adjustable Short Time Pickup and Delay	Adjustable Short Time Pickup with I^2t Short Delay and Ground Fault Protection	Independently Adjustable Short Time Pickup and Ground Fault Protection	Neutral CT for LSG and LSIG Catalog Number
35 kAIC at 480 Vac / 18 kAIC at 600 Vac					
80	FDE308033	FDE308032	FDE308035	FDE308036	CTF080
160	FDE316033	FDE316032	FDE316035	FDE316036	CTF160
225	FDE322533	FDE322532	FDE322535	FDE322536	CTF225
65 kAIC at 480 Vac / 25 kAIC at 600 Vac					
80	HFDE308033	HFDE308032	HFDE308035	HFDE308036	CTF080
160	HFDE316033	HFDE316032	HFDE316035	HFDE316036	CTF160
225	HFDE322533	HFDE322532	HFDE322535	HFDE322536	CTF225
100 kAIC at 480 Vac / 25 kAIC at 600 Vac					
80	FDCE308033	FDCE308032	FDCE308035	FDCE308036	CTF080
160	FDCE316033	FDCE316032	FDCE316035	FDCE316036	CTF160
225	FDCE322533	FDCE322532	FDCE322535	FDCE322536	CTF225

Types FDE, HFDE, and FDCE 210+ Electronic Circuit Breakers with Non-Interchangeable Trip Units

	Digitrip RMS 210+ Trip Unit Only	
	Standard	Optional
	LI Adjustable Instantaneous	LSI Adjustable Short Time Pickup and Delay
Maximum Ampere Rating	Catalog Number	Catalog Number
35 kAIC at 480 Vac / 18 kAIC at 600 Vac		
100	FDE310021	FDE310022
150	FDE315021	①
225	FDE322521	FDE322522
65 kAIC at 480 Vac / 25 kAIC at 600 Vac		
100	HFDE310021	HFDE310022
150	HFDE315021	①
225	HFDE322521	HFDE322522
100 kAIC at 480 Vac / 25 kAIC at 600 Vac ②		
100	FDCE310021	FDCE310022
150	FDCE315021	①
225	FDCE322521	FDCE322522

210+ Trip Electronic Trip Units Amperage Settings

Circuit Breaker Type	Frame	Ratings
FDE, HFDE, FDCE	225	100, 110, 125, 150, 175, 200, 225
FDE, HFDE, FDCE	150	70, 80, 90, 100, 110, 125, 150
FDE, HFDE, FDCE	100	40, 50, 60, 70, 80, 90, 100

FDE 310+ Electronic Breaker with Zone Selective Interlocking

Ampere Rating	LSI w/ZSI Catalog Number	LSIG w/ZSI Catalog Number
35 kAIC at 480 Vac / 18 kAIC at 600 Vac		
80	FDE308032ZG	FDE308036ZG
160	FDE316032ZG	FDE316036ZG
225	FDE322532ZG	FDE322536ZG
65 kAIC at 480 Vac / 25 kAIC at 600 Vac		
80	HFDE308032ZG	HFDE308036ZG
160	HFDE316032ZG	HFDE316036ZG
225	HFDE322532ZG	HFDE322536ZG
100 kAIC at 480 Vac / 25 kAIC at 600 Vac		
80	FDCE308032ZG	FDCE308036ZG
160	FDCE316032ZG	FDCE316036ZG
225	FDCE322532ZG	FDCE322536ZG

Digitrip 310+ Electronic Trip Units Amperage Settings

Circuit Breaker Type	Frame	Ratings
FDE, HFDE, FDCE	225	100, 110, 125, 150, 160, 175, 200, 225
FDE, HFDE, FDCE	160	60, 70, 80, 90, 100, 125, 150, 160
FDE, HFDE, FDCE	80	15, 20, 30, 40, 50, 60, 70, 80

Notes

① For 210+ trip unit, 150 A not available with LSI trip unit; entire range is covered by 100 A and 225 A frames.

② Contact the product line for availability.

Molded Case Switches

Eaton's molded case switches are used as compact switches in applications requiring high current switching capabilities. Molded case switches are constructed of circuit breaker components and are of the high instantaneous automatic type. Molded case switches are listed in accordance with Underwriters Laboratories Standard UL 489.

Molded Case Switches

	Complete Circuit Breaker with Load Side Terminals Only		
	480 Vac Maximum, 250 Vdc	600 Vac Maximum, 250 Vdc	
Maximum Continuous Ampere Rating at 40 °C	**Catalog Number**	**Catalog Number**	**Catalog Number**
Two-Pole			
100	**EHD2100K**	**FD2100K**	**HFD2100K**
150	—	**FD2150K**	**HFD2150K**
225	—	**FD2225K**	**HFD2225K**
Three-Pole			
100	**EHD3100K**	**FD3100K**	**HFD3100K**
150	—	**FD3150K**	**HFD3150K**
225	—	**FD3225K**	**HFD3225K**
Four-Pole			
100	—	**FD4100K**	**HFD4100K**
150	—	**FD4150K**	**HFD4150K**
225	—	**FD4225K**	**HFD4225K**

Note

Molded case switches will open above 1800 amperes.

Accessories Selection Guide and Ordering Information

Line and Load Terminals

Line and load terminals provide wire connecting capabilities for specific ranges of continuous current ratings and wire types. Except as noted, terminals comply with Underwriters Laboratories Standards UL 486A and UL 486B. Unless otherwise specified, F-Frame circuit breakers are factory equipped with load terminals only.

Ordering Information

F-Frame circuit breakers and molded case switches have load terminals only as standard equipment. When standard line-end terminals (same as standard load-end terminals) are required, add Suffix **L** to the circuit breaker catalog number. When non-standard or optional line and/or load terminals are required, order by style number. Specify if factory installation is required.

Line and Load Terminals

Maximum Breaker Amperes	Terminal Body Material	Wire Type	AWG Wire Range	Metric Wire Range mm^2	Package of Three Terminals Catalog Number
Standard Pressure Type Terminals					
20 (EHD)	Steel	Cu/Al	14–10	2.5–4	**3T20FB** ②
100	Steel	Cu/Al	14–1/0	2.5–50	**3T100FB**
225	Aluminum	Cu/Al	4–4/0	25–95	**3TA225FD**
Optional Pressure Terminals					
50	Aluminum	Cu/Al	14–4	2.5–25	**3TA50FB** ②
100	Aluminum	Cu/Al	14–1/0	2.5–50	**3TA100FD**
200	Stainless steel	Cu	4–4/0	25–95	**3T150FB**
225	Copper	Cu	4–4/0	25–95	**3T225FD**
225	Aluminum	Cu/Al	6–300 kcmil	16–150	**3TA225FDK3** ③
225	Aluminum	Cu/Al	6–300 kcmil	16–150	**3TA225FDK** ③④

Notes

① Use on FDE, HFDE and FDCE electronic trip only.
② Not for use with ED, EDH, EDC breakers.
③ Includes terminal shield kit. Adds approximately 3 inches (76.2) to breaker height. Available for use on three-pole breaker only.
④ Replacement use only.

Line and Load Terminals

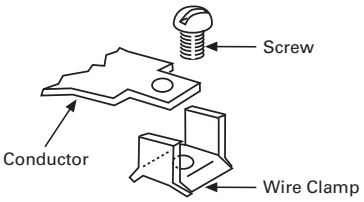

3T20FB

Assemble wire clamp to bottom of conductor as shown.

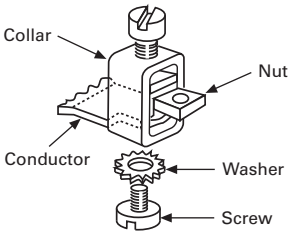

3T100FB, 3T150FB

Insert collar enclosing conductor as shown. Locate nut on top of conductor and tighten securely with screw and washer.
Caution: Collar must surround conductor.

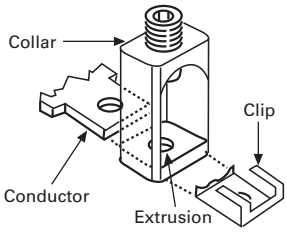

3TA225FD

Insert collar enclosing conductor and center on extrusion on collar. Install clip with legs on top of conductor and snap end around bottom of collar.

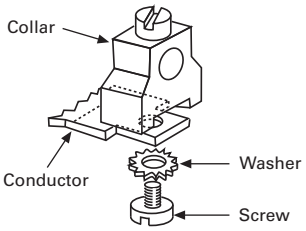

3TA50FB

Assemble collar on top of conductor as shown. Tighten securely with screw and washer.

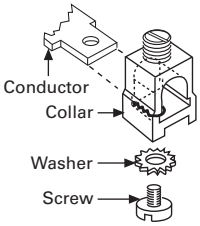

3TA100FD

Collar slides onto conductor and is held in position by a screw and lockwasher.

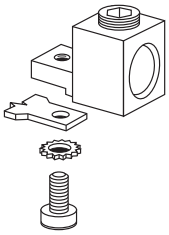

3TA225FDK3 (Up to 150 mm^2)

Assemble collar on top of conductor as shown. Tighten securely with screw and washer. Terminal shield must be used with this collar.
Note: For 185 mm^2, use 3TA225FDK1.
Same illustration for 3TA225FDK

Accessories

Different combinations of accessories can be supplied, depending on the types of accessories and the number of poles in the circuit breaker.

Allowable Accessory Combinations

FD Frame Accessories

Description	Reference Page	Single-Pole Center	Two-Pole Left	Two-Pole Right	Three-Pole ① Left	Three-Pole ① Center	Three-Pole ① Right	Four-Pole Left	Four-Pole Center	Four-Pole Right	Four-Pole Neutral
Internal Accessories (Only one internal accessory per pole)											
Alarm lockout switch (make only)	V4-T2-275	■									
Alarm lockout (Make/Break)	V4-T2-275			■	❑		❑	■			
Alarm lockout (2Make/2Break)	V4-T2-275			■	❑		❑	■			
Auxiliary switch (1A, 1B)	V4-T2-277			■	■		■	■			■
Auxiliary switch (2A, 2B)	V4-T2-277			■	■		■	■			■
Auxiliary switch and alarm switch combination	V4-T2-279			■	❑		❑	■			
Shunt trip—standard	V4-T2-281			■	■		■	■			■
Shunt trip—low energy	V4-T2-285			■	■		■	■			
Undervoltage release mechanism	V4-T2-287			■	■		■	■			
External Accessories											
End cap kit	V4-T2-308		●	●	●	●	●	●	●	●	●
Keeper nut	V4-T2-308	●	●	●	●	●	●	●	●	●	●
Control wire terminal kit	V4-T2-309	●	●	●	●	●	●	●	●	●	●
Multiwire connectors	V4-T2-310	●	●	●	●	●	●	●	●	●	●
Rear fed terminals	V4-T2-310	●	●	●	●	●	●	●	●	●	●
Base mounting hardware	V4-T2-310	●	●	●	●	●	●	●	●	●	●
Terminal shields	V4-T2-312	●	●	●	●	●	●	●	●	●	●
Terminal end covers	V4-T2-313				●	●	●				
Interphase barriers	V4-T2-313		●	●	●	●	●	●	●	●	●
Non-padlockable handle block	V4-T2-314	■	■			■			■		
Snap-on padlockable handle lock hasp	V4-T2-314	■	■			■			■		
Padlockable handle lock hasp	V4-T2-315			■	❑		❑	❑		❑	
Cylinder lock	V4-T2-315				■						
Key interlock kit	V4-T2-316			■	❑		❑	❑		❑	
Sliding bar interlock—requires two breakers	V4-T2-317				●	●	●				
Walking beam interlock—requires two breakers	V4-T2-317				●	●	●	●	●	●	●
Electrical (solenoid and motor) operators	V4-T2-318				●	●	●	●	●	●	●
Plug-in adapters	V4-T2-319		●	●	●	●	●	●	●	●	●
Rear connecting studs	V4-T2-321	●	●	●	●	●	●	●	●	●	●
Panelboard connecting straps	V4-T2-322	●	●	●	●	●	●	●	●	●	●
Handle mechanisms	V4-T2-432				●	●	●				
LFD current limiter	V4-T2-324				●	●	●				
IQ Energy Sentinel	V4-T2-324		●	●	●	●	●				
Cause of trip display	V4-T2-325				●			●			
Remote mount cause of trip display	V4-T2-325				●			●			
Cause of trip LED	V4-T2-325				●			●			
Modifications (Refer to Eaton)											
Special calibration	—	●	●	●	●	●	●	●	●	●	●
Moisture fungus treatment	V4-T2-116	●	●	●	●	●	●	●	●	●	●
Freeze-tested circuit breakers	—	●	●	●	●	●	●	●	●	●	●
Marine/naval application	—	●	●	●	●	●	●	●	●	●	●

Legend

■ Applicable in indicated pole position
❑ May be mounted on left or right pole—not both
● Accessory available/modification available

Note

① Internal accessories are listed with Underwriters Laboratories (UL) for factory installation. They are not listed with UL for field installation.

Technical Data and Specifications

UL 489 Interrupting Capacity Ratings

Circuit Breaker Type	Number of Poles	Interrupting Capacity (kA Symmetrical Amperes) Volts AC (50/60 Hz) 240	277	480	600	Volts DC ① 125	250 ②③
EDB	2, 3	22	—	—	—	10	—
EDS	2, 3	42	—	—	—	10	—
ED	2, 3	65	—	—	—	10	—
EDH	2, 3	100	—	—	—	10	—
EDC	2, 3	200	—	—	—	10	—
EHD	1	—	4	—	—	10	—
	2, 3	18	—	14	—	—	10
FDB	2, 3, 4	18	—	14	14	—	10
FD	1	—	35	—	—	10	—
	2, 3, 4	65	—	35	18	—	10
FDE ④	3	65	—	35	18	—	—
HFD	1	—	65	—	—	10	—
	2, 3, 4	100	—	65	25	—	22
HFDE ④	3	100	—	65	25	—	—
FDC ⑤	2, 3, 4	200	—	100	35	—	22
FDCE ④⑤⑥	3	200	—	100	25	—	—

IEC 157-1 (P1) Interrupting Capacity Ratings (P1)

Circuit Breaker Type	Number of Poles	Interrupting Capacity (kA Symmetrical Amperes) Volts AC (50/60 Hz) 220, 240	380, 415	440	500	Volts DC ① 125	250 ②③
EDB	2, 3	22	—	—	—	10	—
EDS	2, 3	42	—	—	—	10	—
ED	2, 3	65	—	—	—	10	—
EDH	2, 3	100	—	—	—	10	—
EDC	2, 3	200	—	—	—	10	—
EHD	1	—	14	—	—	10	—
	2, 3	18	—	14	—	—	10
FDB	2, 3, 4	18	14	14	14	—	10
FD	1	35	—	—	—	10	—
	2, 3, 4	65	35	35	18	—	10
HFD	1	65	—	—	—	10	—
	2, 3, 4	100	65	65	25	—	22
FDC	2, 3, 4	200	100	100	35	—	22

210+ and 310+ Electronic Trip Unit Accessories

Description	210+	310+	Catalog number
Electronic portable test kit	■	■	**MTST230V**
Trip unit tamper protection wire seal	■	■	**5108A03H01**
External neutral sensor (80 A) ⑦		■	**CTF080**
External neutral sensor (160 A) ⑦		■	**CTF160**
External neutral sensor (225 A) ⑦		■	**CTF225**
Compact external neutral sensor (80 A) ⑦		■	**CTFD080**
Compact external neutral sensor (160 A) ⑦		■	**CTFD160**
Compact external neutral sensor (225 A) ⑦		■	**CTFD225**
Breaker-mount cause-of-trip indication		■	**TRIP-LED**
Breaker-mount ammeter module		■	**DIGIVIEW**
Remote-mount ammeter module		■	**DIGIVIEWR06**

UL 489 Current Limiting Data

Frame	Circuit	Ip (kA)	I^2T (10^6A^2S)
FDC	240 V/200 kA	41.4	1.41
FDC	480 V/100 kA	38.9	2.50
FDC	600 V/35 kA	29.0	3.00

Notes

① DC ratings apply to substantially non-inductive circuits.
② Two-pole circuit breaker, or two poles of three-pole circuit breaker.
③ Time constant is 3 milliseconds minimum at 10 kA and 8 milliseconds minimum at 22 kA.
④ Electronics available on three-pole only, no DC rating for FDE, HFDE, FDCE.
⑤ Current limiting.
⑥ Check with Eaton for availability.
⑦ Neutral sensor required for four-wire systems if neutral protection is desired; sold separately.

FDE 210+ and 310+ Specifications

Description	Digitrip RMS 210+	Digitrip RMS 310+
Breaker type		
Frame designation	FD	FD
Frames available	100 A, 150 A, 225 A	80 A, 160 A, 225 A
Continuous current range (A)	40–225 A	15–225 A
Ground fault pickup (A)	N/A	16–225 A
Interrupting capacities at 480 Vac (kAIC)	35, 65, 100	35, 65, 100
Protection		
Ordering options	LI, LSI	LS, LSI, LSG, LSIG
Arcflash Reduction Maintenance System™ (or Maintenance Mode)	No	No
Interchangeable trip unit	No	No
High load alarm (suffix B20)	No	No
Ground fault alarm with trip (suffix B21)	No	No
Ground fault alarm, no trip (suffix B22)	No	No
Zone selective interlocking (suffix ZG)	No	LSI, LSIG
Cause of trip indication	No	Yes
Thru-cover accessories	No	No
Test kit available	Yes	Yes

FDE 210+ Adjustability Specifications

210+ settings		FD Frame 100 A	150 A	225 A
I_r = continuous current or long delay pickup (amperes) (all 210+)	I_r			
	A	40	70	100
	B	50	80	110
	C	60	90	125
	D	70	100	150
	E	80	110	175
	F	90	125	200
	G (= I_n)	100	150	225
I_i (x I_n)= Instantaneous pickup (210+ LI version)	I_i	100	150	225
	J–2x	200	300	450
	K–2.5x	250	375	565
	L–3x	300	450	675
	M–3.5x	350	525	790
	N–4x	400	600	900
	O–5x	500	750	1125
	P–6x	600	900	1350
	Q–8x	800	1200	1800
	R–10x	1000	1500	2250
	S–12x ①	1200	1800	2400
Fixed instantaneous override (all 210+)		2400	2400	2400
"Isd (x Ir) / tsd = SD profile ② (210+ LSI version)	I_{sd} / t_{sd}	100	150	225
	J	2x / 150	N/A	2x / 150
	K	2x / 300	N/A	2x / 300
	L	2x / I^2t	N/A	2x / I^2t
	M	4x / Inst	N/A	4x / Inst
	N	4x / 150	N/A	4x / 150
	O	4x / I^2t	N/A	4x / I^2t
	P	6x / Inst	N/A	6x / Inst
	Q	6x / 300	N/A	6x / 300
	R	10x / 150	N/A	10x / 150
	S	10x / 300	N/A	10x / 300

FDE 310+ Adjustability Specifications

310+ Settings		FD Frame 80 A	160 A	225 A
I_r = continuous current or long delay pickup (amperes) (All 310+)	I_r			
	A	15	60	100
	B	20	70	110
	C	30	80	125
	D	40	90	150
	E	50	100	160
	F	60	125	175
	G	70	150	200
	H (= I_n)	80	160	225
t_r = long delay time (seconds) (All 310+)	Position 1	2	2	2
	Position 2	4	4	4
	Position 3	7	7	7
	Position 4	10	10	10
	Position 5	12	12	12
	Position 6	15	15	15
	Position 7	20	20	20
	Position 8	24	24	24
I_{sd} (x I_r) = short delay pickup (All 310+)	Position 1	2x	2x	2x
	Position 2	3x	3x	3x
	Position 3	4x	4x	4x
	Position 4	5x	5x	5x
	Position 5	6x	6x	6x
	Position 6	7x	7x	7x
	Position 7	8x	8x	8x
	Position 8	10x	10x	10x
	Position 9	12x	12x	12x
t_{sd} = short delay time I^2t (milliseconds) (LS, LSG)	Fixed	67 at10x	67 at10x	67 at10x
t_{sd} = short delay time flat (milliseconds) (LSI, LSIG)	Position 1	Inst	Inst	Inst
	Position 2	120	120	120
	Position 3	300	300	300
I_g = gound fault pickup (amperes) (LSG, LSIG)	Position 1	16	32	45
	Position 2	24	48	67
	Position 3	32	64	90
	Position 4	48	96	135
	Position 5	64	128	180
	Position 6	80	160	225
t_g = ground fault delay time (milliseconds) (LSG, LSIG)	Position 1	Inst	Inst	Inst
	Position 2	120	120	120
	Position 3	300	300	300
Independently Adjustable Instantaneous (I_i) setting	①			
Maintenance Mode pickup (2.5 x I_n) (amperes)	②			

Notes

① Not available for FD. Independently adjustable I_i setting available in LG, NG and RG ALSI and ALSIG trip units.

② Maintenance Mode not available for FD frames. It is available for KD, LD, MDL, LG, NG and RG.

Dimensions and Weights

Approximate Dimensions in Inches (mm)

FD Frame

Number of Poles	Width	Height	Depth
1	1.38 (35.1)	6.00 (152.4)	3.38 (86.0)
2	2.75 (70.0)	6.00 (152.4)	3.38 (86.0)
3	4.13 (105.0)	6.00 (152.4)	3.38 (86.0)
4	5.50 (139.7)	6.00 (152.4)	3.38 (86.0)

FD Frame, Three-Pole

Front View

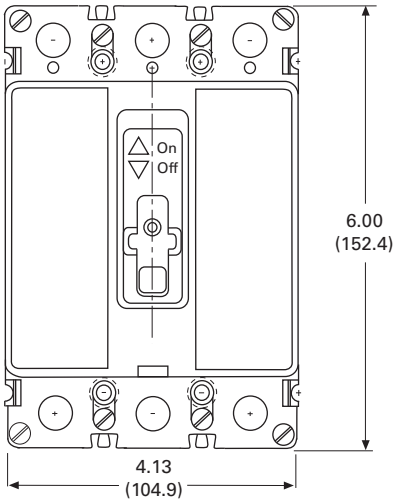

Side View

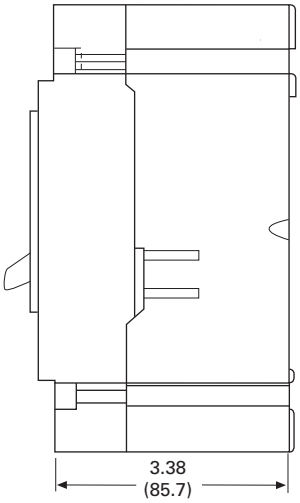

Approximate Shipping Weight Lbs (kg)

FD Frame

	Number of Poles			
Breaker Type	1	2	3	4
ED, EDB, EDS, EDH, EDC	—	3 (1.4)	4.5 (2.0)	—
EHD, FDB, FD, HFD, FDC	2 (0.9)	3 (1.4)	4.5 (2.0)	6 (2.7)
FDE, HFDE, FDCE	—	—	4.5 (2.0)	—

Typical J-Frame Breaker

Contents

Description	*Page*
Product Overview	**V4-T2-116**
Standards and Certifications	**V4-T2-117**
Quick Reference	**V4-T2-118**
G-Frame (15–100 Amperes)	**V4-T2-121**
F-Frame (10–225 Amperes)	**V4-T2-135**
J-Frame (70–250 Amperes)	
Catalog Number Selection	**V4-T2-154**
Product Selection	**V4-T2-155**
Accessories	**V4-T2-158**
Technical Data and Specifications	**V4-T2-159**
Dimensions and Weights	**V4-T2-160**
K-Frame (70–400 Amperes)	**V4-T2-161**
L-Frame (125–600 Amperes)	**V4-T2-185**
M-Frame (300–800 Amperes)	**V4-T2-211**
N-Frame (400–1200 Amperes)	**V4-T2-222**
R-Frame (800–2500 Amperes)	**V4-T2-237**
Motor Circuit Protectors (MCP)	**V4-T2-256**
Motor Protection Circuit Breakers (MPCB)	**V4-T2-267**
Type ELC Current Limiter Attachment (Size 0–4)	**V4-T2-269**
Current Limiting Circuit Breaker Module	**V4-T2-270**
Internal Accessories	**V4-T2-273**
External Accessories	**V4-T2-304**

J-Frame (70–250 Amperes)

Product Description

- All Eaton's J-Frame circuit breakers are HACR rated
- J-Frame circuit breakers are available as individual components (frame, trip unit, terminals), or factory assembled complete breakers
- J-Frame circuit breakers with non-interchangeable trip units are suitable for reverse feed use

Catalog Number Selection

This information is presented only as an aid to understanding catalog numbers. It is not to be used to build catalog numbers for circuit breakers or trip units.

Circuit Breaker/Frame

JD 3 250 F

Circuit Breaker/ Frame Type
JDB
JD
HJD
JDC

Number of Poles
2 = 2 poles
3 = 3 poles
4 = 4 poles

Circuit Breaker/Frame Ampere Rating
070
090
100
125
150
175
200
225
250

Suffix
C = Non-aluminum terminals
F = Frame only
K = High magnetic molded case switch
V = 50 °C calibration
W = Without terminals
X = Load side terminals only
Y = Line side terminals only

Trip Unit

JT 3 250 T

Trip Unit Type
JT = Thermal-magnetic

Number of Poles
2 = 2 poles
3 = 3 poles
4 = 4 poles

Trip Unit Rating/ Plug Ampere Rating
070
090
100
125
150
175
200
225
250

Suffix
T = Trip unit thermal-magnetic fixed thermal adj. magnetic
V = 50 °C calibration (thermal-magnetic trip units only)

Product Selection

Types JD, HJD and JDC Thermal-Magnetic Circuit Breakers with Interchangeable Trip Units

Maximum Continuous Ampere Rating at 40 °C	Standard Interrupting Capacity 600 Vac Rated 35 kAIC at 480 Vac Factory Assembled Circuit Consisting of Frame, Trip Unit and Terminals ① Catalog Number	High Interrupting Capacity 600 Vac Rated 65 kAIC at 480 Vac Factory Assembled Circuit Consisting of Frame, Trip Unit and Terminals ① Catalog Number	Ultra High Interrupting Capacity Current Limiting 600 Vac Rated 100 kAIC at 480 Vac Factory Assembled Circuit Consisting of Frame, Trip Unit and Terminals ① Catalog Number	Thermal-Magnetic Trip Unit Only ① For Use with Standard or High or Ultra High Interrupting Frames Catalog Number	Standard Terminals Only See Page V4-T2-157 for Optional Terminals Catalog Number
Two-Pole					
70	JD2070	HJD2070	JDC2070	JT2070T	TA250KB ②
90	JD2090	HJD2090	JDC2090	JT2090T	
100	JD2100	HJD2100	JDC2100	JT2100T	
125	JD2125	HJD2125	JDC2125	JT2125T	
150	JD2150	HJD2150	JDC2150	JT2150T	
175	JD2175	HJD2175	JDC2175	JT2175T	
200	JD2200	HJD2200	JDC2200	JT2200T	
225	JD2225	HJD2225	JDC2225	JT2225T	
250	JD2250	HJD2250	JDC2250	JT2250T	
Three-Pole					
70	JD3070	HJD3070	JDC3070	JT3070T	TA250KB ②
90	JD3090	HJD3090	JDC3090	JT3090T	
100	JD3100	HJD3100	JDC3100	JT3100T	
125	JD3125	HJD3125	JDC3125	JT3125T	
150	JD3150	HJD3150	JDC3150	JT3150T	
175	JD3175	HJD3175	JDC3175	JT3175T	
200	JD3200	HJD3200	JDC3200	JT3200T	
225	JD3225	HJD3225	JDC3225	JT3225T	
250	JD3250	HJD3250	JDC3250	JT3250T	
Four-Pole ③④					
125	JD4125	HJD4125	JDC4125	JT3125T	TA250KB ②
150	JD4150	HJD4150	JDC4150	JT3150T	
175	JD4175	HJD4175	JDC4175	JT3175T	
200	JD4200	HJD4200	JDC4200	JT3200T	
225	JD4225	HJD4225	JDC4225	JT3225T	
250	JD4250	HJD4250	JDC4250	JT3250T	

Notes

① Magnetic trip adjustable 5–10 times continuous ampere rating.
② Individually packed.
③ Fully rated neutral pole with no protection.
④ Neutral is in right pole.

Types JD, HJD and JDC Thermal-Magnetic Circuit Breakers—Frame Only

Standard Interrupting Capacity 600 Vac Rated 35 kAIC at 480 Vac Catalog Number	High Interrupting Capacity 600 Vac Rated 65 kAIC at 480 Vac Catalog Number	Ultra High Interrupting Capacity Current Limiting 600 Vac Rated 100 kAIC at 480 Vac Catalog Number
Two-Pole		
JD2250F	HJD2250F	JDC2250F
Three-Pole		
JD3250F	HJD3250F	JDC3250F
Four-Pole		
JD4250F	HJD4250F	JDC4250F

Type JDB Thermal-Magnetic Circuit Breakers with Non-Interchangeable Thermal-Magnetic Trip Units Suitable for Reverse Feed Application

Maximum Continuous Ampere Rating at 40 °C	600 Vac Rated, 250 Vdc Complete Circuit Breaker Without Line and Load Terminals Catalog Number	With Standard Line and Load Terminals Only Catalog Number
Two-Pole		
70	JDB2070W	JDB2070
90	JDB2090W	JDB2090
100	JDB2100W	JDB2100
125	JDB2125W	JDB2125
150	JDB2150W	JDB2150
175	JDB2175W	JDB2175
200	JDB2200W	JDB2200
225	JDB2225W	JDB2225
250	JDB2250W	JDB2250
Three-Pole		
70	JDB3070W	JDB3070
90	JDB3090W	JDB3090
100	JDB3100W	JDB3100
125	JDB3125W	JDB3125
150	JDB3150W	JDB3150
175	JDB3175W	JDB3175
200	JDB3200W	JDB3200
225	JDB3225W	JDB3225
250	JDB3250W	JDB3250

Molded Case Switches

Eaton's molded case switches are used as compact switches in applications requiring high current switching capabilities. Molded case switches are constructed of circuit breaker components and are of the high instantaneous automatic type. Molded case switches are listed in accordance with Underwriters Laboratories Standard UL 489.

Molded Case Switches

Maximum Continuous Ampere Rating at 40 °C	600 Vac Maximum, 250 Vdc Complete Circuit Breaker Only Without Line and Load Terminals Catalog Number	Suitable for Reverse Feed Use Catalog Number	Standard Terminals Only See PageV4-T2-157 for Optional Terminals Catalog Number
Two-Pole			
250	JD2250KW	JDB2250KW	TA250KB ①
	HJD2250KW	HJDB2250KW	—
Three-Pole			
250	JD3250KW	JDB3250KW	TA250KB ①
	HJD3250KW	HJDB3250KW	—
Four-Pole			
250	JD4250KW	JDB4250KW	TA250KB ①
	HJD4250KW	HJDB4250KW	—

Notes

① Individually packed.

Molded case switches may open above 2500 amperes.

Accessories Selection Guide and Ordering Information

Line and Load Terminals

Eaton's line and load terminals provide wire connecting capabilities for specific ranges of continuous current ratings and wire types. All terminals comply with Underwriters Laboratories Standards UL 486A and UL 486B and CSA Standard C22.2 No. 65, or Electrical Bulletin 1165.

Unless otherwise specified, J-Frame circuit breaker line and load terminals are shipped separately for field installation.

The bottom of the standard TA250KB terminal contains a recess that is positioned over the J-Frame circuit breaker terminal conductor.

Ordering Information

J-Frame circuit breakers use Cu/Al terminals as standard. When optional copper-only terminals are required, order by catalog number. Specify if factory installation is required.

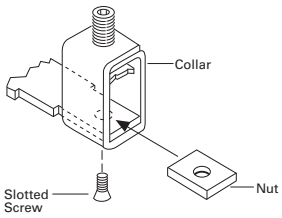

T250KB Terminal

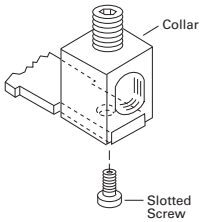

TA250KB Terminal (Standard)

Line and Load Terminals

Maximum Breaker Amperes	Terminal Body Material	Wire Type	AWG Wire Range/ No. Conductors	Metric Wire Range mm^2	Catalog Number
Standard Cu/Al Pressure Terminals					
250	Aluminum	Cu/Al	4–350 kcmil	25–185	**TA250KB**
Optional Cu Pressure Terminals					
250	Stainless Steel	Cu	4–350 kcmil	25–185	**T250KB**

Accessories

Allowable Accessory Combinations

Different combinations of accessories can be supplied, depending on the types of accessories and the number of poles in the circuit breaker.

JD Frame Accessories

Description	Reference Page	Two-, Three-Pole Left	Two-, Three-Pole Center	Two-, Three-Pole Right	Four-Pole Left	Four-Pole Center	Four-Pole Right	Four-Pole Neutral
Internal Accessories (Only One Internal Accessory Per Pole)								
Alarm lockout (Make/Break)	V4-T2-275	❑		❑	❑		❑	
Auxiliary switch (1A, 1B)	V4-T2-277	■		■	■		■	
Auxiliary switch (2A, 2B)	V4-T2-277	■		■	■		■	
Auxiliary switch and alarm switch combination	V4-T2-279	❑		❑	❑		❑	
Shunt trip—standard	V4-T2-282	■		■	■		■	
Shunt trip—low energy	V4-T2-285	■		■	■		■	
Undervoltage release mechanism	V4-T2-289	■		■	■		■	
External Accessories								
End cap kit	V4-T2-308	●	●	●	●	●	●	●
Plug nut	V4-T2-309	●	●	●	●	●	●	●
Control wire terminal kit	V4-T2-309	●	●	●	●	●	●	●
Multiwire connectors	V4-T2-310	●	●	●	●	●	●	●
Base mounting hardware	V4-T2-311	●	●	●	●	●	●	●
Terminal shields	V4-T2-312	●	●	●	●	●	●	●
Interphase barriers	V4-T2-313	●	●	●	●	●	●	●
Non-padlockable handle block	V4-T2-314		■			■		
Padlockable handle block	V4-T2-314		■			■		
Padlockable handle lock hasp	V4-T2-315	❑		❑	❑		❑	
Cylinder lock	V4-T2-315	❑		❑				
Key interlock kit	V4-T2-316	❑		❑	❑		❑	
Sliding bar interlock—requires two breakers	V4-T2-317	●	●	●				
Electrical (solenoid) operator	V4-T2-319	●	●	●	●	●	●	●
Plug-in adapters	V4-T2-319	●	●	●	●	●	●	●
Rear connecting studs	V4-T2-321	●	●	●	●	●	●	●
Panelboard connecting straps	V4-T2-322	●	●	●	●	●	●	●
Handle mechanisms	V4-T2-432	●	●	●	●	●	●	●
Handle extension	V4-T2-447	●	●	●	●	●	●	●
IQ Energy Sentinel	V4-T2-324	●	●	●				
Modifications (Refer to Eaton)								
Special calibration	—	●	●	●	●	●	●	●
Moisture fungus treatment	V4-T2-116	●	●	●	●	●	●	●
Freeze-tested circuit breakers	—	●	●	●	●	●	●	●
Marine/naval application	—	●	●	●	●	●	●	●

Legend

■ Applicable in indicated pole position
❑ May be mounted on left or right pole—not both
● Accessory available/modification available

Technical Data and Specifications

UL 489 Interrupting Capacity Ratings

Circuit Breaker Type	Number of Poles	Interrupting Capacity (kA Symmetrical Amperes) Volts AC (50/60 Hz) 240	480	600	Volts DC 125	250 ①②
JDB	2, 3	65	35	18	—	10
JD	2, 3, 4	65	35	18	—	10
HJD	2, 3, 4	100	65	25	—	22
JDC ③	2, 3, 4	200	100	35	—	22

IEC 157-1 (P1) Interrupting Capacity Ratings

Circuit Breaker Type	Number of Poles	Interrupting Capacity (kA Symmetrical Amperes) Volts AC (50/60 Hz) 240	380	415	600	Volts DC 125	250 ①②
JD	2, 3, 4	65	35	35	—	—	10
HJD	2, 3, 4	100	65	65	—	—	22
JDC	2, 3, 4	200	100	100	—	—	22

UL 489 Current Limiting Data

Frame	Circuit	Ip (kA)	I^2T (10^6A^2S)
JDC	240 V/200 kA	42.6	1.36
JDC	480 V/100 kA	40.0	3.00
JDC	600 V/35 kA	31.9	3.10

Notes

① Two-pole circuit breaker or two outside poles of three-pole circuit breaker.
② Time constant is 3 milliseconds minimum at 10 kA and 8 milliseconds minimum at 22 kA.
③ Current limiting.

Dimensions and Weights

Approximate Dimensions in Inches (mm)

JD Frame

Number of Poles	Width	Height	Depth
2, 3	4.13 (105.0)	10.00 (254.0)	4.06 (104.1)
4	5.50 (139.7)	10.00 (254.0)	4.06 (104.1)

JD-Frame, Three-Pole

Front View Cutout

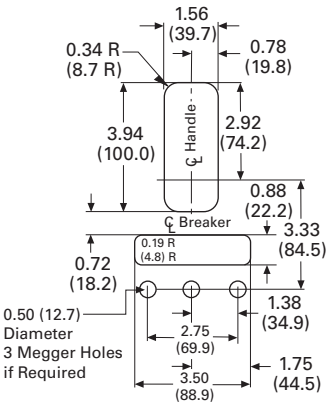

Front View

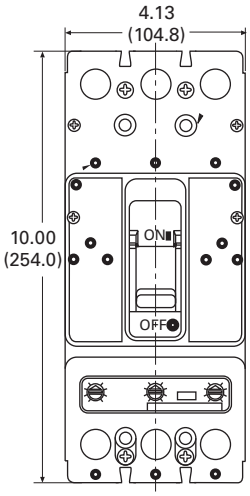

Side View

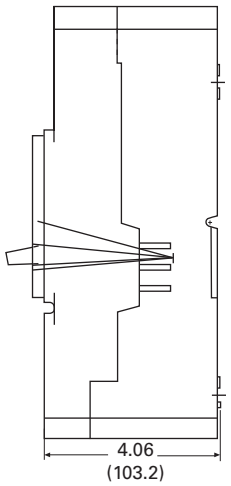

Approximate Shipping Weight in Lbs (kg)

JD Frame

Breaker Type	Complete Breaker Two-Pole	Complete Breaker Three-Pole	Complete Breaker Four-Pole	Frame Only Two-Pole	Frame Only Three-Pole	Frame Only Four-Pole	Trip Unit Two-Pole	Trip Unit Three-Pole	Trip Unit Four-Pole
JDB	11.25 (5.1)	12.50 (5.7)	—	—	—	—	—	—	—
JD	11.25 (5.1)	12.50 (5.7)	13.25 (6.0)	9.00 (4.1)	10.00 (4.5)	10.50 (4.8)	2.00 (0.9)	2.00 (0.9)	2.25 (1.0)
HJD	11.25 (5.1)	12.50 (5.7)	13.25 (6.0)	9.00 (4.1)	10.00 (4.5)	10.50 (4.8)	2.00 (0.9)	2.00 (0.9)	2.25 (1.0)
JDC	12.25 (5.6)	13.50 (6.1)	14.25 (6.5)	10.00 (4.5)	11.00 (5.0)	11.50 (5.2)	2.00 (0.9)	2.00 (0.9)	2.25 (1.0)

Typical K-Frame Circuit Breaker

Contents

Description	*Page*
Product Overview	**V4-T2-116**
Standards and Certifications	**V4-T2-117**
Quick Reference	**V4-T2-118**
G-Frame (15–100 Amperes)	**V4-T2-121**
F-Frame (10–225 Amperes)	**V4-T2-135**
J-Frame (70–250 Amperes)	**V4-T2-153**
K-Frame (70–400 Amperes)	
Catalog Number Selection	**V4-T2-162**
Product Selection	**V4-T2-164**
Accessories	**V4-T2-180**
Technical Data and Specifications	**V4-T2-181**
Dimensions and Weights	**V4-T2-184**
L-Frame (125–600 Amperes)	**V4-T2-185**
M-Frame (300–800 Amperes)	**V4-T2-211**
N-Frame (400–1200 Amperes)	**V4-T2-222**
R-Frame (800–2500 Amperes)	**V4-T2-237**
Motor Circuit Protectors (MCP)	**V4-T2-256**
Motor Protection Circuit Breakers (MPCB)	**V4-T2-267**
Type ELC Current Limiter Attachment (Size 0–4)	**V4-T2-269**
Current Limiting Circuit Breaker Module	**V4-T2-270**
Internal Accessories	**V4-T2-273**
External Accessories	**V4-T2-304**

K-Frame (70–400 Amperes)

Product Description

- All Eaton K-Frame circuit breakers are HACR rated
- K-Frame circuit breakers are available as individual components (frame, trip unit, terminals), or factory assembled complete breakers
- K-Frame circuit breakers with non-interchangeable trip units are suitable for reverse feed use

Catalog Number Selection

This information is presented only as an aid to understanding catalog numbers. It is not to be used to build catalog numbers for circuit breakers or trip units.

K-Frame with Thermal-Magnetic Trip Unit Technology

Thermal-Magnetic Breakers and Frames ①

KD 3 400 F

Circuit Breaker/ Frame Type
DK
KD
KDB
HKD
KDC

Number of Poles
2 = Two-pole
3 = Three-pole
4 = Four-pole

Circuit Breaker/ Frame Ampere Rating
100
125
150
175
200
225
250
300
350
400

Suffix	
C	= Copper terminals
E	= 50% protected neutral pole (four-pole electronic trip unit circuit breaker only)
F	= Frame only (400 A only)
K	= High-magnetic molded-case switch
V	= 50 ° calibration (thermal-magnetic trip units only)
W	= Without terminals
X	= Load terminals only
Y	= Line side terminals only
Blank	= Standard load and line side terminals

Thermal-Magnetic Trip Unit ①

KT 3 400 F

Trip Unit Type
KT = Thermal-magnetic

Number of Poles
2 = Two-pole
3 = Three-pole
4 = Four-pole

Circuit Breaker/ Frame Ampere Rating
100
125
150
175
200
225
250
300
350
400

Suffix
T = Trip unit only

Notes

① Frames are the same for thermal-magnetic or 310+ electronic trip units, e.g., **KD3400F** or **HKD3400F**.
Ampere rating available with electronic trip unit only.

K-Frame with 310+ Electronic Trip Unit Technology ①

310+ Circuit Breakers ②

KDB 3 400 F T36 ZG W

Performance at 480 Vac
- **KDB** = 35 kAIC
- **HKDB** = 65 kAIC
- **CKDB** = 35 kAIC 100% rated
- **CHKDB** = 65 kAIC 100% rated

Number of Poles
- **3** = Three-pole

Ampere Rating
- **125**
- **250**
- **400**

Frame Designation
- **F**

Trip Unit
- **T33** = 310+ Electronic LS
- **T32** = 310+ Electronic LSI
- **T35** = 310+ Electronic LSG
- **T36** = 310+ Electronic LSIG
- **T38** = 310+ Electronic ALSI with Maintenance Mode
- **T39** = 310+ Electronic ALSIG with Maintenance Mode

Feature
- **Blank** = No feature
- **B20** = High load alarm
- **B21** = Ground fault alarm, with trip
- **B22** = Ground fault alarm, no trip
- **ZG** = Zone selective interlocking

Terminals
- **W** = No terminals
- **L** = Line and load

310+ Electronic Trip Units ③

KES 3 400 LSIG ZG

Trip Unit Type
- **KES**

Number of Poles
- **3** = Three-pole
- **4** = Four-pole

Ampere Rating
- **125**
- **250**
- **400**

Trip Unit
- **LS** = 310+ Electronic LS
- **LSI** = 310+ Electronic LSI
- **LSG**= 310+ Electronic LSG ②
- **LSIG**= 310+ Electronic LSIG ②
- **ALSI**= 310+ Electronic LSI with Maintenance Mode
- **ALSIG**= 310+ Electronic LSIG with Maintenance Mode ②

Feature
- **Blank** = No feature
- **B20** = High load alarm
- **B21** = Ground fault alarm, with trip ②
- **B22** = Ground fault alarm, no trip ②
- **ZG** = Zone selective interlocking

K-Frame with OPTIM Trip Unit Technology

OPTIM Circuit Breakers

KD 3 125 T5 7 W

Circuit Breaker/ Frame Type
- **KD**
- **HKD**
- **KDC**
- **CKD**
- **CHKD**

Number of Poles
- **3** = Three-pole

Circuit Breaker/Frame Ampere Rating
- **125**
- **250**
- **400**

Trip Model
- **T5** = Model 550
- **T10** = Model 1050

Trip Type
- **2** = LSI
- **6** = LSIG
- **7** = LSIA

Suffix
- **W** = Without terminals

Notes

① Cannot combine 'B2X' suffixes with 'B2X' suffixes.
② Not available in four-pole configurations.
③ Frames are the same for thermal-magnetic or 310+ electronic trip units, e.g., **KD3400F**, **HKD3400F**, etc.

Product Selection

Types KD, HKD and KDC Thermal-Magnetic Circuit Breakers with Interchangeable Trip Units

Maximum Continuous Ampere Rating at 40 °C	Standard Interrupting Capacity 600 Vac Rated 35 kAIC at 480 Vac Factory Assembled Circuit Consisting of Frame, Trip Unit and Terminals ① Catalog Number	High Interrupting Capacity 600 Vac Rated 65 kAIC at 480 Vac Factory Assembled Circuit Consisting of Frame, Trip Unit and Terminals ① Catalog Number	Ultra High Interrupting Capacity Current Limiting 600 Vac Rated 100 kAIC at 480 Vac Factory Assembled Circuit Consisting of Frame, Trip Unit and Terminals ① Catalog Number	Thermal-Magnetic Trip Unit Only ① For Use with Standard or High or Ultra High Interrupting Frames Catalog Number	Standard Terminals Only See Page V4-T2-179 for Optional Terminals Catalog Number
Two-Pole					
100	KD2100	HKD2100	KDC2100	KT2100T	TA300K ②
125	KD2125	HKD2125	KDC2125	KT2125T	TA300K ②
150	KD2150	HKD2150	KDC2150	KT2150T	TA300K ②
175	KD2175	HKD2175	KDC2175	KT2175T	TA300K ②
200	KD2200	HKD2200	KDC2200	KT2200T	TA300K ②
225	KD2225	HKD2225	KDC2225	KT2225T	TA300K ②
250	KD2250	HKD2250	KDC2250	KT2250T	TA350K ②
300	KD2300	HKD2300	KDC2300	KT2300T	TA350K ②
350	KD2350	HKD2350	KDC2350	KT2350T	TA350K ②
400	KD2400	HKD2400	KDC2400	KT2400T	2TA400K ③
Three-Pole					
100	KD3100	HKD3100	KDC3100	KT3100T	TA300K ②
125	KD3125	HKD3125	KDC3125	KT3125T	TA300K ②
150	KD3150	HKD3150	KDC3150	KT3150T	TA300K ②
175	KD3175	HKD3175	KDC3175	KT3175T	TA300K ②
200	KD3200	HKD3200	KDC3200	KT3200T	TA300K ②
225	KD3225	HKD3225	KDC3225	KT3225T	TA300K ②
250	KD3250	HKD3250	KDC3250	KT3250T	TA350K ②
300	KD3300	HKD3300	KDC3300	KT3300T	TA350K ②
350	KD3350	HKD3350	KDC3350	KT3350T	TA350K ②
400	KD3400	HKD3400	KDC3400	KT3400T	3TA400K ③
Four-Pole					
100	KD4100	HKD4100	KDC4100	KT3100T	TA300K ②
125	KD4125	HKD4125	KDC4125	KT3125T	TA300K ②
175	KD4175	HKD4175	KDC4175	KT3175T	TA300K ②
200	KD4200	HKD4200	KDC4200	KT3200T	TA300K ②
225	KD4225	HKD4225	KDC4225	KT3225T	TA300K ②
250	KD4250	HKD4250	KDC4250	KT3250T	TA350K ②
300	KD4300	HKD4300	KDC4300	KT3300T	TA350K ②
350	KD4350	HKD4350	KDC4350	KT3350T	TA350K ②
400	KD4400	HKD4400	KDC4400	KT3400T	4TA400K ③

Notes

① Magnetic trip adjustable 5–10 times continuous ampere rating.
② Individually packed.
③ 2TA400K, 3TA400K and 4TA400K terminal kits contain one terminal for each pole and one terminal cover.

Types KD, HKD and KDC Thermal-Magnetic Circuit Breakers—Frame Only

Standard Interrupting Capacity 600 Vac Rated 35 kAIC at 480 Vac Catalog Number	High Interrupting Capacity 600 Vac Rated 65 kAIC at 480 Vac Catalog Number	Ultra High Interrupting Capacity Current Limiting 600 Vac Rated 100 kAIC at 480 Vac Catalog Number
Two-Pole		
KD2400F	HKD2400F	KDC2400F
Three-Pole		
KD3400F	HKD3400F	KDC3400F
Four-Pole		
KD4400F	HKD4400F	KDC4400F

Types KD, HKD and KDC Electronic Circuit Breakers with Interchangeable 310+ Trip Units

Order as individual components: breaker frame, trip unit and terminals. See 310+ adjustability specifications on **Page V4-T2-182**.

Types KD, HKD and KDC Electronic Circuit Breakers with Interchangeable 310+ Trip Units—Three-Pole

	Circuit Breaker Frame Only			Digitrip RMS 310+ Trip Unit Only ①					
				Standard	Options				
				LS	LSI	LSG	LSIG		
Max. Cont. Ampere Rating at 40 °C	Standard Interrupting Capacity 600 Vac Rated 35 kAIC at 480 Vac Catalog Number	High Interrupting Capacity 600 Vac Rated 65 kAIC at 480 Vac	Ultra High Interrupting Capacity Current Limiting 600 Vac Rated 100 kAIC at 480 Vac	Adjustable Short Time Pickup with I^2t Short Delay Ramp	Independently Adjustable Short Time Pickup and Delay	Adjustable Short Time Pickup with I^2t Short Delay and Ground Fault Protection	Independently Adjustable Short Time Pickup and Delay and Ground Fault Protection	Neutral CT for LSG and LSIG ②③ Catalog Number	Terminal Information
125	KD3400F	HKD3400F	KDC3400F	KES3125LS	KES3125LSI	KES3125LSG	KES3125LSIG	LGFCT125	See **Page V4-T2-179**
250	KD3400F	HKD3400F	KDC3400F	KES3250LS	KES3250LSI	KES3250LSG	KES3250LSIG	LGFCT250	
400	KD3400F	HKD3400F	KDC3400F	KES3400LS	KES3400LSI	KES3400LSG	KES3400LSIG	LGFCT400	

Types KD, HKD and KDC Electronic Circuit Breakers with Interchangeable 310+ Trip Units—Four-Pole ④⑤

	Circuit Breaker Frame Only			Digitrip RMS 310+ Trip Unit Only ①					
				Standard	Options				
				LS	LSI	LSG	LSIG		
Max. Cont. Ampere Rating at 40 °C	Standard Interrupting Capacity 600 Vac Rated 35 kAIC at 480 Vac Catalog Number	High Interrupting Capacity 600 Vac Rated 65 kAIC at 480 Vac	Ultra High Interrupting Capacity Current Limiting 600 Vac Rated 100 kAIC at 480 Vac	Adjustable Short Time Pickup with I^2t Short Delay Ramp	Independently Adjustable Short Time Pickup and Delay	Adjustable Short Time Pickup with I^2t Short Delay and Ground Fault Protection	Independently Adjustable Short Time Pickup and Delay and Ground Fault Protection	Neutral CT for LSG and LSIG ②③ Catalog Number	Terminal Information
125	KD4400F	HKD4400F	KDC4400F	KES4125LS	KES4125LSI	—	—	—	See **Page V4-T2-179**
250	KD4400F	HKD4400F	KDC4400F	KES4250LS	KES4250LSI	—	—	—	
400	KD4400F	HKD4400F	KDC4400F	KES4400LS	KES4400LSI	—	—	—	

Notes

① For AC use only.
② Required for four-wire systems if neutral protection is desired.
③ Included with LSG and LSIG trip units.
④ Trip unit includes protected neutral pole. Use corresponding three-pole trip unit if protected neutral pole is not required.
⑤ Fully rated neutral pole protection is standard. For 50% rated protection on neutral pole, add Suffix **E** to four-pole trip unit catalog number.

Type KDB with Digitrip 310+ Non-Interchangeable Trip Unit Suitable for Reverse Feed

See 310+ adjustability specifications on **Page V4-T2-182**.

		Factory Assembled Circuit Breaker Consisting of Frame and Trip Unit Less Terminals ①					
		Standard LS	Optional LSI	LSG	LSIG		
Maximum Continuous Ampere Rating at 40 °C	Number of Poles	Adjustable Short Time Pickup with I^2t Short Delay Ramp Catalog Number	Independently Adjustable Short Time Pickup and Delay	Adjustable Short Time Pickup with I^2t Short Delay and Ground Fault Protection	Independently Adjustable Short Time Pickup and Ground Fault Protection	Neutral CT for LSG and LSIG ②③ Catalog Number	Terminal Information
125	3	**KDB3125FT33W**	**KDB3125FT32W**	**KDB3125FT35W**	**KDB3125FT36W**	**LGFCT125**	See **Page V4-T2-180**
250	3	**KDB3250FT33W**	**KDB3250FT32W**	**KDB3250FT35W**	**KDB3250FT36W**	**LGFCT250**	
400	3	**KDB3400FT33W**	**KDB3400FT32W**	**KDB3400FT35W**	**KDB3400FT36W**	**LGFCT400**	

Type HKDB with Digitrip 310+ Non-Interchangeable Trip Unit Suitable for Reverse Feed

See 310+ adjustability specifications on **Page V4-T2-182**.

		Factory Assembled Circuit Breaker Consisting of Frame and Trip Unit Less Terminals ①					
		Standard LS	Optional LSI	LSG	LSIG		
Maximum Continuous Ampere Rating at 40 °C	Number of Poles	Adjustable Short Time Pickup with I^2t Short Delay Ramp Catalog Number	Independently Adjustable Short Time Pickup and Delay	Adjustable Short Time Pickup with I^2t Short Delay and Ground Fault Protection	Independently Adjustable Short Time Pickup and Ground Fault Protection	Neutral CT for LSG and LSIG ②③ Catalog Number	Terminal Information
125	3	**HKDB3125FT33W**	**HKDB3125FT32W**	**HKDB3125FT35W**	**HKDB3125FT36W**	**LGFCT125**	See **Page V4-T2-180**
250	3	**HKDB3250FT33W**	**HKDB3250FT32W**	**HKDB3250FT35W**	**HKDB3250FT36W**	**LGFCT250**	
400	3	**HKDB3400FT33W**	**HKDB3400FT32W**	**HKDB3400FT35W**	**HKDB3400FT36W**	**LGFCT400**	

100% Rated Types CKD and CHKD Electronic Circuit Breakers

The NEC allows the breaker to be rated at 100% of its frame size in an assembly, provided that 90 °C wire is applied at the 75 °C ampacity. All 100% rated circuit breakers have electronic trip units.

100% Rated Types CKD and CHKD Electronic Circuit Breakers—Three-Pole

See 310+ adjustability specifications on **Page V4-T2-182**.

	Circuit Breaker Frame Only		Digitrip RMS 310+ Trip Unit Only					
			Standard	Options				
Maximum Continuous Ampere Rating at 40 °C	Standard Interrupting Capacity 35 kAIC at 480 Vac Catalog Number	High Interrupting Capacity 65 kAIC at 480 Vac	Adjustable Short Time Pickup with I^2t Short Delay Ramp	Independently Adjustable Short Time Pickup and Delay	Adjustable Short Time Pickup with I^2t Short Delay and Ground Fault Protection	Independently Adjustable Short Time Pickup and Delay and Ground Fault Protection	Neutral CT for LSG and LSIG ②③ Catalog Number	Terminal Information
125	**CKD3400F**	**CHKD3400F**	**KES3125LS**	**KES3125LSI**	**KES3125LSG**	**KES3125LSIG**	**LGFCT125**	See **Page V4-T2-179**
250	**CKD3400F**	**CHKD3400F**	**KES3250LS**	**KES3250LSI**	**KES3250LSG**	**KES3250LSIG**	**LGFCT250**	
400	**CKD3400F**	**CHKD3400F**	**KES3400LS**	**KES3400LSI**	**KES3400LSG**	**KES3400LSIG**	**LGFCT400**	

Notes

① For AC use only.
② Required for four-wire systems if neutral protection is desired.
③ Included with LSG and LSIG trip units.

Types DK and KDB Thermal-Magnetic Circuit Breakers with Non-Interchangeable Trip Units

Suitable for reverse feed application.

Types DK and KDB Thermal-Magnetic Circuit Breakers with Non-Interchangeable Trip Units

Maximum Continuous Ampere Rating at 40 °C	240 Vac Rated, 250 Vdc Complete Circuit Breaker Without Line and Load Terminals Catalog Number	With Line Terminals Only Catalog Number	With Standard Line and Load Terminals Only Catalog Number	600 Vac Rated, 250 Vdc Complete Circuit Breaker Without Line and Load Terminals Catalog Number	With Standard Line and Load Terminals Catalog Number
Two-Pole					
100	—	—	—	**KDB2100W**	**KDB2100**
125	—	—	—	**KDB2125W**	**KDB2125**
150	—	—	—	**KDB2150W**	**KDB2150**
175	—	—	—	**KDB2175W**	**KDB2175**
200	—	—	—	**KDB2200W**	**KDB2200**
225	—	—	—	**KDB2225W**	**KDB2225**
250	**DK2250W**	**DK2250Y**	**DK2250**	**KDB2250W**	**KDB2250**
300	**DK2300W**	**DK2300Y**	**DK2300**	**KDB2300W**	**KDB2300**
350	**DK2350W**	**DK2350Y**	**DK2350**	**KDB2350W**	**KDB2350**
400	**DK2400W**	**DK2400Y**	**DK2400**	**KDB2400W**	**KDB2400**
Three-Pole					
100	—	—	—	**KDB3100W**	**KDB3100**
125	—	—	—	**KDB3125W**	**KDB3125**
150	—	—	—	**KDB3150W**	**KDB3150**
175	—	—	—	**KDB3175W**	**KDB3175**
200	—	—	—	**KDB3200W**	**KDB3200**
225	—	—	—	**KDB3225W**	**KDB3225**
250	**DK3250W**	**DK3250Y**	**DK3250**	**KDB3250W**	**KDB3250**
300	**DK3300W**	**DK3300Y**	**DK3300**	**KDB3300W**	**KDB3300**
350	**DK3350W**	**DK3350Y**	**DK3350**	**KDB3350W**	**KDB3350**
400	**DK3400W**	**DK3400Y**	**DK3400**	**KDB3400W**	**KDB3400**

Molded Case Switches

Eaton's molded case switches are used as compact switches in applications requiring high current switching capabilities. Molded case switches are constructed of circuit breaker components and are of the high instantaneous automatic type. Molded case switches are listed in accordance with Underwriters Laboratories Standard UL 489.

Molded Case Switches

Maximum Continuous Ampere Rating at 40 °C	240 Vac Maximum, 250 Vdc Complete Circuit Breaker with Standard Line and Load Terminals Catalog Number	600 Vac Maximum, 250 Vdc Complete Circuit Breaker with Standard Line and Load Terminals Catalog Number	600 Vac Maximum, 250 Vdc Complete Circuit Breaker with Standard Line and Load Terminals. Suitable for Reverse Feed Use Catalog Number
Two-Pole			
400	**DK2400K**	**KD2400K**	**KDB2400K**
	—	**HKD2400K**	**HKDB2400K**
Three-Pole			
400	**DK3400K**	**KD3400K**	**KDB3400K**
	—	**HKD3400K**	**HKDB3400K**
Four-Pole			
400	—	**KD4400K**	**KDB4400K**
	—	**HKD4400K**	**HKDB4400K**

Note

Molded case switches may open above 4000 amperes.

Digitrip OPTIM 550 Electronic Circuit Breakers with Interchangeable Rating Plug

Order as individual components: breaker frame (which includes trip unit), rating plug, terminals.

Digitrip OPTIM 550 Electronic Circuit Breakers with Interchangeable Rating Plug

	Circuit Breaker Frame Only L – Adjustable Long Delay Pickup (I_r) with Adjustable Long Delay Time (I^2t or I^4t Response) ① S – Adjustable Short Delay Pickup with Adjustable Short Delay Time (I^2t or Flat Response) I – Adjustable Instantaneous Pickup G – Adjustable Ground Fault Pickup with Adjustable Ground Fault Time (I^2t or Flat Response) A – Adjustable Ground Fault Alarm with Adjustable Ground Fault Time (I^2t or Flat Response)			Digitrip OPTIM Rating Plug Only	
	OPTIM 550 ②				
	LSI	LSIG	LSIA		Fixed Rating Plug
Maximum Continuous Ampere Rating at 40 °C	Catalog Number	Catalog Number	Catalog Number	Ampere Rating	Catalog Number
Three-Pole Standard Interrupting Capacity 600 Vac Rated 35 kAIC at 480 Vac					
125	**KD3125T52W**	**KD3125T56W**	**KD3125T57W**	70	**ORPK125A70**
				90	**ORPK125A90**
				100	**ORPK125A100**
				110	**ORPK125A110**
				125	**ORPK125A125**
250	**KD3250T52W**	**KD3250T56W**	**KD3250T57W**	125	**ORPK025A125**
				150	**ORPK025A150**
				175	**ORPK025A175**
				200	**ORPK025A200**
				225	**ORPK025A225**
				250	**ORPK025A250**
400	**KD3400T52W**	**KD3400T56W**	**KD3400T57W**	200	**ORPK40A200**
				225	**ORPK40A225**
				250	**ORPK40A250**
				300	**ORPK40A300**
				350	**ORPK40A350**
				400	**ORPK40A400**

Notes

① Long delay I^4t response selection limits short delay time to flat response.

② Zone interlocking, PowerNet, or both features can be added at the factory by adding suffixes **ZG**, **PN** or **ZGP** respectively to above catalog number.

Digitrip OPTIM 550 Electronic Circuit Breakers with Interchangeable Rating Plug, continued

Maximum Continuous Ampere Rating at 40 °C	Circuit Breaker Frame Only L – Adjustable Long Delay Pickup (I_r) with Adjustable Long Delay Time (I^2t or I^4t Response) ① S – Adjustable Short Delay Pickup with Adjustable Short Delay Time (I^2t or Flat Response) I – Adjustable Instantaneous Pickup G – Adjustable Ground Fault Pickup with Adjustable Ground Fault Time (I^2t or Flat Response) A – Adjustable Ground Fault Alarm with Adjustable Ground Fault Time (I^2t or Flat Response) OPTIM 550 ②			Digitrip OPTIM Rating Plug Only	
	LSI	LSIG	LSIA		Fixed Rating Plug
	Catalog Number	Catalog Number	Catalog Number	Ampere Rating	Catalog Number
Three-Pole High Interrupting Capacity 600 Vac Rated 65 kAIC at 480 Vac					
125	**HKD3125T52W**	**HKD3125T56W**	**HKD3125T57W**	70	**ORPK125A70**
				90	**ORPK125A90**
				100	**ORPK125A100**
				110	**ORPK125A110**
				125	**ORPK125A125**
250	**HKD3250T52W**	**HKD3250T56W**	**HKD3250T57W**	125	**ORPK025A125**
				150	**ORPK025A150**
				175	**ORPK025A175**
				200	**ORPK025A200**
				225	**ORPK025A225**
				250	**ORPK025A250**
400	**HKD3400T52W**	**HKD3400T56W**	**HKD3400T57W**	200	**ORPK40A200**
				225	**ORPK40A225**
				250	**ORPK40A250**
				300	**ORPK40A300**
				350	**ORPK40A350**
				400	**ORPK40A400**

Notes

① Long delay I^4t response selection limits short delay time to flat response.

② Zone interlocking, PowerNet, or both features can be added at the factory by adding suffixes **ZG**, **PN** or **ZGP** respectively to above catalog number.

Digitrip OPTIM 550 Electronic Circuit Breakers with Interchangeable Rating Plug, continued

Maximum Continuous Ampere Rating at 40 °C	Circuit Breaker Frame Only L – Adjustable Long Delay Pickup (I_r) with Adjustable Long Delay Time (I^2t or I^4t Response) ① S – Adjustable Short Delay Pickup with Adjustable Short Delay Time (I^2t or Flat Response) I – Adjustable Instantaneous Pickup G – Adjustable Ground Fault Pickup with Adjustable Ground Fault Time (I^2t or Flat Response) A – Adjustable Ground Fault Alarm with Adjustable Ground Fault Time (I^2t or Flat Response) OPTIM 550 ②			Digitrip OPTIM Rating Plug Only	
	LSI Catalog Number	LSIG Catalog Number	LSIA Catalog Number	Ampere Rating	Fixed Rating Plug Catalog Number
Three-Pole Ultra High Interrupting Capacity Current Limiting 600 Vac Rated 100 kAIC at 480 Vac					
125	**KDC3125T52W**	**KDC3125T56W**	**KDC3125T57W**	70	**ORPK125A70**
				90	**ORPK125A90**
				100	**ORPK125A100**
				110	**ORPK125A110**
				125	**ORPK125A125**
250	**KDC3250T52W**	**KDC3250T56W**	**KDC3250T57W**	125	**ORPK025A125**
				150	**ORPK025A150**
				175	**ORPK025A175**
				200	**ORPK025A200**
				225	**ORPK025A225**
				250	**ORPK025A250**
400	**KDC3400T52W**	**KDC3400T56W**	**KDC3400T57W**	200	**ORPK40A200**
				225	**ORPK40A225**
				250	**ORPK40A250**
				300	**ORPK40A300**
				350	**ORPK40A350**
				400	**ORPK40A400**

Notes

① Long delay I^4t response selection limits short delay time to flat response.

② Zone interlocking, PowerNet, or both features can be added at the factory by adding suffixes **ZG**, **PN** or **ZGP** respectively to above catalog number.

Digitrip OPTIM 1050 Electronic Circuit Breakers with Interchangeable Rating Plug

Order as individual components: breaker frame (which includes trip unit), rating plug, terminals.

Digitrip OPTIM 1050 Electronic Circuit Breakers with Interchangeable Rating Plug

Maximum Continuous Ampere Rating at 40 °C	Circuit Breaker Frame Only L – Adjustable Long Delay Pickup (I_r) with Adjustable Long Delay Time (I^2t or I^4t Response) ① S – Adjustable Short Delay Pickup with Adjustable Short Delay Time (I^2t or Flat Response) I – Adjustable Instantaneous Pickup G – Adjustable Ground Fault Pickup with Adjustable Ground Fault Time (I^2t or Flat Response) A – Adjustable Ground Fault Alarm with Adjustable Ground Fault Time (I^2t or Flat Response) OPTIM 1050 ②		Digitrip OPTIM Rating Plug Only	
	LSIG	LSIA		Fixed Rating Plug
	Catalog Number	Catalog Number	Ampere Rating	Catalog Number
Three-Pole Standard Interrupting Capacity 600 Vac Rated 35 kAIC at 480 Vac				
125	**KD3125T106W**	**KD3125T107W**	70	**ORPK125A70**
			90	**ORPK125A90**
			100	**ORPK125A100**
			110	**ORPK125A110**
			125	**ORPK125A125**
250	**KD3250T106W**	**KD3250T107W**	125	**ORPK025A125**
			150	**ORPK025A150**
			175	**ORPK025A175**
			200	**ORPK025A200**
			225	**ORPK025A225**
			250	**ORPK025A250**
400	**KD3400T106W**	**KD3400T107W**	200	**ORPK40A200**
			225	**ORPK40A22**
			250	**ORPK40A250**
			300	**ORPK40A300**
			350	**ORPK40A350**
			400	**ORPK40A400**

Notes

① Long delay I^4t response selection limits short delay time to flat response.

② Factory sealed.

Digitrip OPTIM 1050 Electronic Circuit Breakers with Interchangeable Rating Plug, continued

Maximum Continuous Ampere Rating at 40 °C	Circuit Breaker Frame Only L – Adjustable Long Delay Pickup (I_r) with Adjustable Long Delay Time (I^2t or I^4t Response) ① S – Adjustable Short Delay Pickup with Adjustable Short Delay Time (I^2t or Flat Response) I – Adjustable Instantaneous Pickup G – Adjustable Ground Fault Pickup with Adjustable Ground Fault Time (I^2t or Flat Response) A – Adjustable Ground Fault Alarm with Adjustable Ground Fault Time (I^2t or Flat Response) OPTIM 1050 ②		Digitrip OPTIM Rating Plug Only	
	LSIG Catalog Number	LSIA Catalog Number	Ampere Rating	Fixed Rating Plug Catalog Number
Three-Pole High Interrupting Capacity 600 Vac Rated 65 kAIC at 480 Vac				
125	**HKD3125T106W**	**HKD3125T107W**	70	**ORPK125A70**
			90	**ORPK125A90**
			100	**ORPK125A100**
			110	**ORPK125A110**
			125	**ORPK125A125**
250	**HKD3250T106W**	**HKD3250T107W**	125	**ORPK025A125**
			150	**ORPK025A150**
			175	**ORPK025A175**
			200	**ORPK025A200**
			225	**ORPK025A225**
			250	**ORPK025A250**
400	**HKD3400T106W**	**HKD3400T107W**	200	**ORPK40A200**
			225	**ORPK40A225**
			250	**ORPK40A250**
			300	**ORPK40A300**
			350	**ORPK40A350**
			400	**ORPK40A400**

Notes

① Long delay I^4t response selection limits short delay time to flat response.

② Factory sealed.

Digitrip OPTIM 1050 Electronic Circuit Breakers with Interchangeable Rating Plug, continued

Maximum Continuous Ampere Rating at 40 °C	Circuit Breaker Frame Only L – Adjustable Long Delay Pickup (I_r) with Adjustable Long Delay Time (I^2t or I^4t Response) ① S – Adjustable Short Delay Pickup with Adjustable Short Delay Time (I^2t or Flat Response) I – Adjustable Instantaneous Pickup G – Adjustable Ground Fault Pickup with Adjustable Ground Fault Time (I^2t or Flat Response) A – Adjustable Ground Fault Alarm with Adjustable Ground Fault Time (I^2t or Flat Response) OPTIM 1050 ②		Digitrip OPTIM Rating Plug Only	
	LSIG	LSIA		Fixed Rating Plug
	Catalog Number	Catalog Number	Ampere Rating	Catalog Number
Three-Pole Ultra High Interrupting Capacity Current Limiting 600 Vac Rated 100 kAIC at 480 Vac				
125	**KDC3125T106W**	**KDC3125T107W**	70	**ORPK125A70**
			90	**ORPK125A90**
			100	**ORPK125A100**
			110	**ORPK125A110**
			125	**ORPK125A125**
250	**KDC3250T106W**	**KDC3250T107W**	125	**ORPK025A125**
			150	**ORPK025A150**
			175	**ORPK025A175**
			200	**ORPK025A200**
			225	**ORPK025A225**
			250	**ORPK025A250**
400	**KDC3400T106W**	**KDC3400T107W**	200	**ORPK40A200**
			225	**ORPK40A225**
			250	**ORPK40A250**
			300	**ORPK40A300**
			350	**ORPK40A350**
			400	**ORPK40A400**

Notes

① Long delay I^4t response selection limits short delay time to flat response.

② Factory sealed.

100% Rated Digitrip OPTIM 550 Electronic Circuit Breakers with Interchangeable Rating Plug

Order as individual components: breaker frame (which includes trip unit), rating plug, terminals.

100% Rated Digitrip OPTIM 550 Electronic Circuit Breakers with Interchangeable Rating Plug

	Circuit Breaker Frame Only L – Adjustable Long Delay Pickup (I_r) with Adjustable Long Delay Time (I^2t or I^4t Response) ① S – Adjustable Short Delay Pickup with Adjustable Short Delay Time (I^2t or Flat Response) I – Adjustable Instantaneous Pickup G – Adjustable Ground Fault Pickup with Adjustable Ground Fault Time (I^2t or Flat Response) A – Adjustable Ground Fault Alarm with Adjustable Ground Fault Time (I^2t or Flat Response)			Digitrip OPTIM Rating Plug Only	
	OPTIM 550 ②				
	LSI	LSIG	LSIA		Fixed Rating Plug
Maximum Continuous Ampere Rating at 40 °C	Catalog Number	Catalog Number	Catalog Number	Ampere Rating	Catalog Number
Three-Pole Standard Interrupting Capacity 600 Vac Rated 35 kAIC at 480 Vac					
125	**CKD3125T52W**	**CKD3125T56W**	**CKD3125T57W**	70	**ORPK125A70**
				90	**ORPK125A90**
				100	**ORPK125A100**
				110	**ORPK125A110**
				125	**ORPK125A125**
250	**CKD3250T52W**	**CKD3250T56W**	**CKD3250T57W**	125	**ORPK025A125**
				150	**ORPK025A150**
				175	**ORPK025A175**
				200	**ORPK025A200**
				225	**ORPK025A225**
				250	**ORPK025A250**
400	**CKD3400T52W**	**CKD3400T56W**	**CKD3400T57W**	200	**ORPK40A200**
				225	**ORPK40A225**
				250	**ORPK40A250**
				300	**ORPK40A300**
				350	**ORPK40A350**
				400	**ORPK40A400**

Notes

① Long delay I^4t response selection limits short delay time to flat response.

② Zone interlocking, PowerNet, or both features can be added at the factory by adding suffixes **ZG**, **PN** or **ZGP** respectively to above catalog number (refer to **Page V4-T2-293**).

100% Rated Digitrip OPTIM 550 Electronic Circuit Breakers with Interchangeable Rating Plug, continued

Maximum Continuous Ampere Rating at 40 °C	Circuit Breaker Frame Only L – Adjustable Long Delay Pickup (I_r) with Adjustable Long Delay Time (I^2t or I^4t Response) ① S – Adjustable Short Delay Pickup with Adjustable Short Delay Time (I^2t or Flat Response) I – Adjustable Instantaneous Pickup G – Adjustable Ground Fault Pickup with Adjustable Ground Fault Time (I^2t or Flat Response) A – Adjustable Ground Fault Alarm with Adjustable Ground Fault Time (I^2t or Flat Response) OPTIM 550 ②			Digitrip OPTIM Rating Plug Only	
	LSI Catalog Number	LSIG Catalog Number	LSIA Catalog Number	Ampere Rating	Fixed Rating Plug Catalog Number
Three-Pole High Interrupting Capacity 600 Vac Rated 65 kAIC at 480 Vac					
125	**CHKD3125T52W**	**CHKD3125T56W**	**CHKD3125T57W**	70	**ORPK125A70**
				90	**ORPK125A90**
				100	**ORPK125A100**
				110	**ORPK125A110**
				125	**ORPK125A125**
250	**CHKD3250T52W**	**CHKD3250T56W**	**CHKD3250T57W**	125	**ORPK025A125**
				150	**ORPK025A150**
				175	**ORPK025A175**
				200	**ORPK025A200**
				225	**ORPK025A225**
				250	**ORPK025A250**
400	**CHKD3400T52W**	**CHKD3400T56W**	**CHKD3400T57W**	200	**ORPK40A200**
				225	**ORPK40A225**
				250	**ORPK40A250**
				300	**ORPK40A300**
				350	**ORPK40A350**
				400	**ORPK40A400**

Notes

① Long delay I^4t response selection limits short delay time to flat response.

② Zone interlocking, PowerNet, or both features can be added at the factory by adding suffixes **ZG**, **PN** or **ZGP** respectively to above catalog number.

100% Rated Digitrip OPTIM 1050 Electronic Circuit Breakers with Interchangeable Rating Plug

Order as individual components: breaker frame (which includes trip unit), rating plug, terminals.

100% Rated Digitrip OPTIM 1050 Electronic Circuit Breakers with Interchangeable Rating Plug

	Circuit Breaker Frame Only L – Adjustable Long Delay Pickup (I_r) with Adjustable Long Delay Time (I^2t or I^4t Response) ① S – Adjustable Short Delay Pickup with Adjustable Short Delay Time (I^2t or Flat Response) I – Adjustable Instantaneous Pickup G – Adjustable Ground Fault Pickup with Adjustable Ground Fault Time (I^2t or Flat Response) A – Adjustable Ground Fault Alarm with Adjustable Ground Fault Time (I^2t or Flat Response)		Digitrip OPTIM Rating Plug Only	
	OPTIM 1050 ②			
	LSIG	LSIA		Fixed Rating Plug
Maximum Continuous Ampere Rating at 40 °C	Catalog Number	Catalog Number	Ampere Rating	Catalog Number
Three-Pole Standard Interrupting Capacity 600 Vac Rated 35 kAIC at 480 Vac				
125	**CKD3125T106W**	**CKD3125T107W**	70	**ORPK125A70**
			90	**ORPK125A90**
			100	**ORPK125A100**
			110	**ORPK125A110**
			125	**ORPK125A125**
250	**CKD3250T106W**	**CKD3250T107W**	125	**ORPK025A125**
			150	**ORPK025A150**
			175	**ORPK025A175**
			200	**ORPK025A200**
			225	**ORPK025A225**
			250	**ORPK025A250**
400	**CKD3400T106W**	**CKD3400T107W**	200	**ORPK40A200**
			225	**ORPK40A225**
			250	**ORPK40A250**
			300	**ORPK40A300**
			350	**ORPK40A350**
			400	**ORPK40A400**

Notes

① Long delay I^4t response selection limits short delay time to flat response.

② Factory sealed.

100% Rated Digitrip OPTIM 1050 Electronic Circuit Breakers with Interchangeable Rating Plug, continued

Maximum Continuous Ampere Rating at 40 °C	Circuit Breaker Frame Only L – Adjustable Long Delay Pickup (I_r) with Adjustable Long Delay Time (I^2t or I^4t Response) ① S – Adjustable Short Delay Pickup with Adjustable Short Delay Time (I^2t or Flat Response) I – Adjustable Instantaneous Pickup G – Adjustable Ground Fault Pickup with Adjustable Ground Fault Time (I^2t or Flat Response) A – Adjustable Ground Fault Alarm with Adjustable Ground Fault Time (I^2t or Flat Response) OPTIM 1050 ②		Digitrip OPTIM Rating Plug Only	
	LSIG	LSIA		Fixed Rating Plug
	Catalog Number	Catalog Number	Ampere Rating	Catalog Number
Three-Pole High Interrupting Capacity 600 Vac Rated 65 kAIC at 480 Vac				
125	**CHKD3125T106W**	**CHKD3125T107W**	70	**ORPK125A70**
			90	**ORPK125A90**
			100	**ORPK125A100**
			110	**ORPK125A110**
			125	**ORPK125A125**
250	**CHKD3250T106W**	**CHKD3250T107W**	125	**ORPK025A125**
			150	**ORPK025A150**
			175	**ORPK025A175**
			200	**ORPK025A200**
			225	**ORPK025A225**
			250	**ORPK025A250**
400	**CHKD3400T106W**	**CHKD3400T107W**	200	**ORPK40A200**
			225	**ORPK40A225**
			250	**ORPK40A250**
			300	**ORPK40A300**
			350	**ORPK40A350**
			400	**ORPK40A400**

Notes

① Long delay I^4t response selection limits short delay time to flat response.

② Factory sealed.

Accessories Selection Guide and Ordering Guide

Line and Load Terminals

Eaton's line and load terminals provide wire connecting capabilities for specific ranges of continuous current ratings and wire types. All terminals comply with Underwriters Laboratories Standards UL 486A and UL 486B and CSA Standard C22.2 No. 65, or Electrical Bulletin 1165. Unless otherwise specified, K-Frame circuit breaker line and load terminals are shipped separately for field installation.

Ordering Information

K-Frame circuit breakers use Cu/Al terminals as standard. When optional copper or Cu/Al terminals are required, order by catalog number. Specify if factory installation is required.

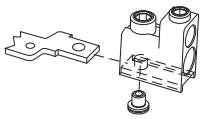

TA401K

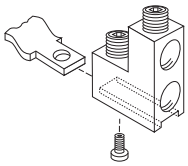

TA400K, T400K

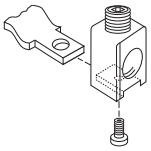

TA350K, T350K

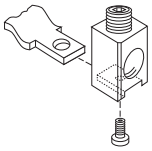

TA300K, T300K

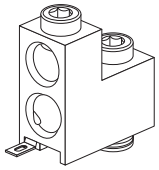

Tab is 1/4 x.032

T400KCW, TA400KCW, TA401KCW

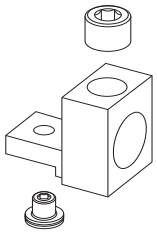

TA402K, T402K

Line and Load Terminals

Maximum Breaker Amperes	Terminal Body Material	Wire Type	AWG Wire Range/No. Conductors	Metric Wire Range mm²	Terminal Catalog Number	Terminals with Control Wire Termination Catalog Number
Standard Cu/Al Pressure Terminals						
225	Aluminum	Cu/Al	3–350 (1)	35–185	**TA300K** ①	—
400	Aluminum	Cu/Al	250–500 (1)	120–240	**TA350K** ①	—
400	Aluminum	Cu/Al	3/0–250 (2)	95–120	**2TA400K** ②③	**2TA400KCW** ②③
400	Aluminum	Cu/Al	3/0–250 (2)	95–120	**3TA400K** ②④	**3TA400KCW** ②④
400	Aluminum	Cu/Al	3/0–250 (2)	95–120	**4TA400K** ⑤⑥	**4TA400KCW** ⑤⑥
Optional Copper and Cu/Al Pressure Type Terminals						
225	Copper	Cu	3–350 (1)	35–185	**T300K**①	—
400	Copper	Cu	250–500 (1)	120–240	**T350K** ①	—
400	Copper	Cu	3/0–250 (2)	95–120	**2T400K** ③	**2T400KCW** ②③
					3T400K ④	**3T400KCW** ②④
					4T400K ⑤	**4T400KCW** ⑤⑥
400	Aluminum	Cu/Al	2/0–250 (2) or 2/0–500 (1)	70–120	**2TA401K** ②③	**2TA401KCW** ②③
				70–240	**3TA401K** ②④	**3TA401KCW** ②④
				70–240	**4TA401K** ⑤⑥	**4TA401KCW** ⑤⑥
400	Aluminum	Cu/Al	500–750 (1)	300–400	**2TA402K** ②③	—
					3TA402K ②④	—
					4TA402K ⑤⑥	—
400	Copper	Cu	500–750 (1)	—	**2T402K** ②③	—
					3T402K ②④	—
					4T402K ⑤⑥	—

Notes

① Individually packed.
② Terminal kits contain one terminal for each pole and one terminal cover.
③ Two-pole kit.
④ Three-pole kit.
⑤ Four-pole kit.
⑥ Terminal kits contain one terminal for each pole and three interphase barriers.

Accessories

Allowable Accessory Combinations

Different combinations of accessories can be supplied, depending on the types of accessories and the number of poles in the circuit breaker.

KD Frame Accessories

Description	Reference Page	Two-Pole ①		Three-Pole			Four-Pole			
		Left	Right	Left	Center	Right	Left	Center	Right	Neutral
Internal Accessories (Only One Internal Accessory Per Pole)										
Alarm lockout (Make/Break)	V4-T2-276		■	❑		❑	■			
Alarm lockout (2Make/2Break)	V4-T2-276			❑		❑	■			
Auxiliary switch (1A, 1B)	V4-T2-278		■	■		■	■		■	
Auxiliary switch (2A, 2B)	V4-T2-278			■		■	■		■	
Auxiliary switch (3A, 3B)	V4-T2-278			■		■	■		■	
Auxiliary switch and alarm switch combination	V4-T2-279			❑		❑	❑		❑	
Shunt trip—standard ②	V4-T2-282		■	■		■	■		■	
Shunt trip—low energy ②	V4-T2-285			■		■	■			
Undervoltage release mechanism ②	V4-T2-290		■	■		■	■			
PowerNet or zone interlock kit (OPTIM 550)	V4-T2-293					■				
External Accessories										
End cap kit	V4-T2-308	●	●	●	●	●	●	●	●	●
Keeper nut	V4-T2-308	●	●	●	●	●	●	●	●	●
Control wire terminal kit	V4-T2-309	●	●	●	●	●	●	●	●	●
Terminal adapter	V4-T2-309	●	●	●	●	●	●	●	●	●
Multiwire connectors	V4-T2-310	●	●	●	●	●	●	●	●	●
Rear fed terminals	V4-T2-310	●	●	●	●	●	●	●	●	●
Base mounting hardware	V4-T2-311	●	●	●	●	●	●	●	●	●
Terminal shields	V4-T2-313	●	●	●	●	●	●	●	●	●
Interphase barriers	V4-T2-313	●	●	●	●	●	●	●	●	●
Non-padlockable handle block	V4-T2-314	■			■			■		
Padlockable handle block	V4-T2-314				■					
Padlockable handle lock hasp	V4-T2-315		■	❑		❑	❑		❑	
Cylinder lock	V4-T2-315	❑	❑	❑		❑				
Key Interlock kit	V4-T2-316	■	❑	❑		❑	❑		❑	
Sliding bar interlock—requires two breakers	V4-T2-317			●	●	●				
Walking beam interlock—requires two breakers	V4-T2-317			●	●	●	●	●	●	●
Electrical (solenoid) operator	V4-T2-318			●	●	●	●	●	●	●
Plug-in adapters	V4-T2-319	●	●	●	●	●	●	●	●	●
Rear connecting studs	V4-T2-321	●	●	●	●	●	●	●	●	●
Panelboard connecting straps	V4-T2-322	●	●	●	●	●	●	●	●	●
Handle mechanisms	V4-T2-432	●	●	●	●	●	●	●	●	●
Handle extension	V4-T2-447	●	●	●	●	●	●	●	●	●
IQ Energy Sentinel	V4-T2-324			●	●	●	●	●	●	●
Solid-state (electronic) portable test kit	V4-T2-324	●	●	●	●	●	●	●	●	●
OPTIM System Components Three Poles										
Breaker interface module (BIM)	V4-T2-325									
Digitrip OPTIMizer	V4-T2-325									
Auxiliary power module	V4-T2-325									
Modifications (Refer to Eaton)										
Special calibration	—	●	●	●	●	●	●	●	●	●
Moisture fungus treatment	V4-T2-116	●	●	●	●	●	●	●	●	●
Freeze-tested circuit breakers	—	●	●	●	●	●	●	●	●	●
Marine/naval application	—	●	●	●	●	●	●	●	●	●

Legend

■ Applicable in indicated pole position
❑ May be mounted on left or right pole—not both
● Accessory available/modification available

Notes

① Two-pole breaker supplied in three-pole frame. Current carrying parts omitted from center pole.

② Shunt trip and UVR cannot be mounted in right poles on KES or OPTIM trip units. Standard internal accessories cannot be mounted in right pole on any K-Frame OPTIM trip unites. Special OPTIM ground fault and zone interlock accessories are available for field installation in the right pole of K-Frame 550 OPTIM trip units. Factory installed 2a/2b and bell/aux are available for factory installation. K-Frame breakers equipped with OPTIM 1050 trip units include aux-bell alarm in the right pole.

310+ Electronic Trip Unit Accessories

Description	Catalog Number
Electronic portable test kit	**MTST230V** ②
Trip unit tamper protection wire seal	**5108A03H01**
External neutral sensor, 400 A	**LGFCT400** ③
External neutral sensor, 250 A	**LGFCT250** ③
External neutral sensor, 125 A	**LGFCT125** ③
Breaker-mount cause-of-trip indication	**TRIP-LED**
Breaker-mount ammeter module	**DIGIVIEW**
Remote-mount ammeter module	**DIGIVIEWR06** ④

Technical Data and Specifications

NEMA/UL 489/CSA Interrupting Capacity Ratings

Circuit Breaker Type	Number of Poles	Interrupting Capacity (kA Symmetrical Amperes) Volts AC (50/60 Hz) 240	277	480	600	Volts DC 250 ⑤⑥
DK	2, 3	65	—	—	—	10
KDB	2, 3, 4	65	—	35	25	10
KD	2, 3, 4	65	—	35	25	10
HKD, HKDB	2, 3, 4	100	—	65	35	22
KDC ⑦	2, 3, 4	200	—	100	65	22
CKD	3	65	—	35	25	—
CHKD	3	100	—	65	35	—

IEC 157-1 (P1) Interrupting Capacity Ratings

Circuit Breaker Type	Number of Poles	Interrupting Capacity (kA Symmetrical Amperes) Volts AC (50/60 Hz) 240	380	415	440	500	600	Volts DC 250 ⑤⑥
DK	2, 3	65	—	—	—	—	—	10
KDB	2, 3, 4	65	40	40	—	—	—	10
KD	2, 3, 4	65	40	40	—	—	—	10
HKD, HKDB	2, 3, 4	100	65	65	—	—	—	22
KDC	2, 3, 4	200	100	100	—	—	—	22

UL 489 Current Limiting Data

Frame	Circuit	Ip (kA)	I^2T (10^6A^2S)
KDC	240 V/200 kA	56.00	2.30
KDC	480 V/100 kA	53.30	5.60
KDC	600 V/50 kA	43.40	5.40

Notes

① Two-pole breaker supplied in three-pole frame. Current carrying parts omitted from center pole.
② MTST230V applies to 100–230 Vac.
③ Included with all LD LSG and LSIG trip units and breakers.
④ Includes 6 ft cable for remote mounting; NEMA 3R rated.
⑤ Two-pole circuit breaker or two outside poles of three-pole circuit breaker.
⑥ Time constant is 3 milliseconds minimum at 10 kA and 8 milliseconds minimum at 22 kA.
⑦ Current limiting.

310+ Specifications

Trip Unit Type	Digitrip RMS 310+
Breaker Type	
Frame	K
Frames available	125 A, 250 A, 400 A
Continuous current range (A)	55–400 A
Ground fault pickup (A)	50–400 A
Interrupting capacities at 480 Vac (kAIC)	35, 65, 100
100% rated	Yes
Protection	
Ordering options	LS, LSI, LSG, LSIG, ALSI, ALSIG
Arcflash Reduction Maintenance System	Remote enabled on ALSI, ALSIG
Interchangeable trip unit	Yes
High load alarm, trip (suffix B20) ①	Yes
Ground fault alarm with trip (suffix B21) ①	LSG, LSIG, ALSIG
Ground fault alarm, no trip (suffix B22)	LSG, LSIG, ALSIG
Zone selective interlock (suffix ZG) ①	LSI, LSIG, ALSI, ALSIG
Cause of trip indication	Yes (via TRIP-LED or DIGIVIEW)
Thru-cover accessories	No

310+ Adjustability Specifications

310+ Settings		K-Frame 125A	250 A	400 A
I_r = continuous current or long delay pickup (amperes) (All 310+)	Ir \ In			
	A (=Ir)	55	100	160
	B (=Ir)	60	125	200
	C (=Ir)	70	150	225
	D (=Ir)	80	160	250
	E (=Ir)	90	175	300
	F (=Ir)	100	200	315
	G (=Ir)	110	225	350
	H (=Ir=In)	125	250	400
t_r = long delay time (seconds) (All 310+)	2	2	2	2
	4	4	4	4
	7	7	7	7
	10	10	10	10
	12	12	12	12
	15	15	15	15
	20	20	20	20
	24	24	24	24
I_{sd} (x I_r) = short delay pickup (amperes) (All 310+)	Position 1	2	2x	2x
	Position 2	3	3x	3x
	Position 3	4	4x	4x
	Position 4	5	5x	5x
	Position 5	6	6x	6x
	Position 6	7	7x	7x
	Position 7	8	8x	8x
	Position 8	10	10x	10x
	Position 9	12	12x	12x
t_{sd} = short delay time I^2t (milliseconds) (LS and LSG)	Fixed	67 @10x		
t_{sd} = short delay time flat (milliseconds) (LSI, LSIG, ALSI, ALSIG)	Position 1	Inst		
	Position 2	120		
	Position 3	300		
I_g (x I_n) = ground fault pickup (amperes) (LSG, LSIG, ALSIG)	Position 1	25	50	80
	Position 2	37.5	75	120
	Position 3	50	100	160
	Position 4	75	150	240
	Position 5	100	200	320
	Position 6	125	250	400
t_g = ground fault delay time (milliseconds) (LSG, LSIG, ALSIG)	Position 1	Inst		
	Position 2	120		
	Position 3	300		
Independently adjustable Instantaneous (Ii) setting	②			
Maintenance Mode pickup (2.5 x I_n) (amperes) (310+ with Maintenance Mode—ALSI and ALSIG)	Fixed	312	625	1000

Notes

① B2x suffixes cannot be combined with B2x suffixes.

② Not available for KD. Independently adjustable I_i setting available in LG, NG and RG ALSI and ALSIG trip units.

Specifications

Trip Unit Type	Digitrip OPTIM 550	Digitrip OPTIM 1050
rms sensing	Yes	Yes
Breaker Type		
Frame	K	K
Ampere range	125–400 A	125–400 A
Interrupting rating at 480 volts	35, 65, 100 (kA)	35, 65, 100 (kA)
Protection		
Ordering options	LSI, LSI(A), LSIG	LSI(A), LSIG
Fixed rated plug (I_n)	Yes	Yes
Overtemperature trip	Yes	Yes
Long Delay Protection (L)		
Adjustable rating plug (I_n)	No	No
Long delay pickup	0.4–1.0 x (I_n)	0.4–1.0 x (I_n)
Long delay time I^2t	2–24 seconds	2–24 seconds
Long delay time I^4t	1–5 seconds	1–5 seconds
Long delay thermal memory	Yes	Yes
High load alarm	0.5–1.0 x I_r	0.5–1.0 x I_r
Short Delay Protection (S)		
Short delay pickup	150–800% x (I_r)	150–800% x (I_r)
Short delay time I^2t	100–500 ms	100–500 ms
Short delay time flat	100–500 ms	100–500 ms
Short delay time zone selective interlocking	Yes ①	Yes
Instantaneous Protection (I)		
Instantaneous pickup	200–800% x (I_n)	200–800% x (I_n)
Discriminator	Yes	Yes
Instantaneous override	Yes	Yes
Ground Fault Protection (G)		
Ground fault alarm	20–100% x (I_s)	20–100% x (I_s)
Ground fault pickup	20–100% x (I_s)	20–100% x (I_s)
Ground fault delay I^2t	100–500 ms	100–500 ms
Ground fault delay flat	100–500 ms	100–500 ms
Ground fault zone selective interlocking	Yes ①	Yes
Ground fault thermal memory	Yes	Yes
System Diagnostics		
Status LEDs	Yes	Yes
Cause of trip LEDs	Yes	Yes
Magnitude of trip information	Yes	Yes
Remote signal contact—ground alarm	Yes ①	Yes
Local auxiliary and bell alarm contact	Optional	Included
System Monitoring		
Digital display	Yes ②	Yes ②
Current	Yes	Yes
Power and energy	No	Yes
Power quality—harmonics	No	Yes
Power factor	No	Yes
Communications		
PowerNet	Yes ③	Yes
Testing		
Testing method	OPTIMizer, BIM, PowerNet	OPTIMizer, BIM, PowerNet

Legend

BIM = Breaker Interface Module
(A) = GF Alarm
I_s = Sensor Rating
I_n = Rating Plug
I_r = Long Delay Pickup Setting

Notes

① Zone interlock kit.
② By OPTIMizer/BIM.
③ Eaton's PowerNet kit.

Dimensions and Weights

Approximate Dimensions in Inches (mm)

KD Frame

Number of Poles	Width	Height	Depth
2, 3	5.50 (149.7)	10.13 (257.3)	4.10 (104.1)
4	7.22 (183.4)	10.13 (257.3)	4.10 (104.1)

KD-Frame, Two- and Three-Pole

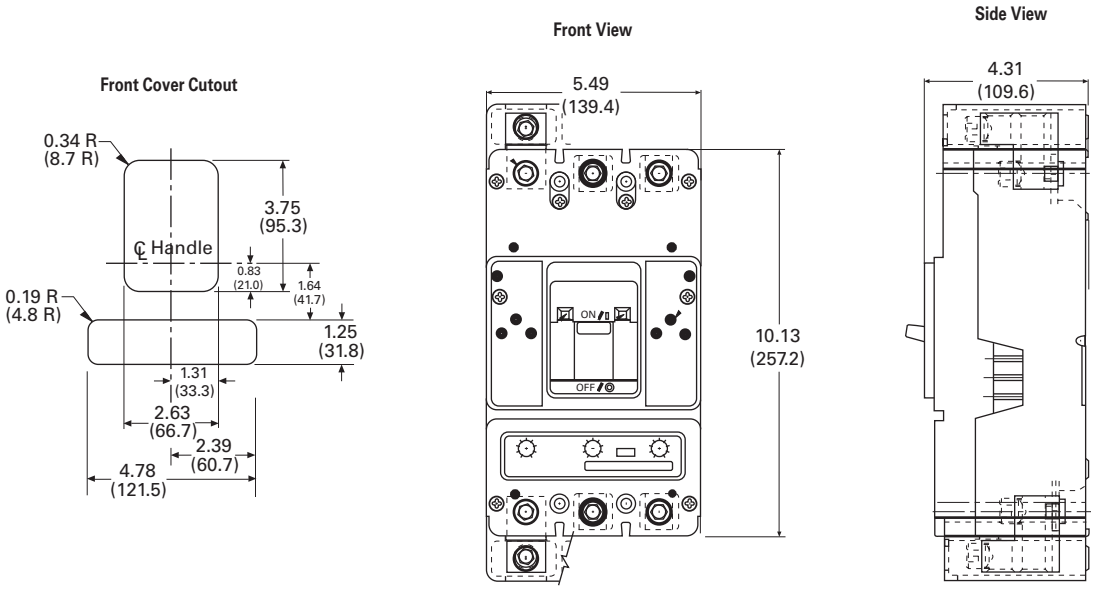

Approximate Shipping Weight, Lbs (kg)

KD Frame

Breaker Type	Complete Breaker		Frame Only		Trip Unit ①	
	Two-Pole	Three-Pole	Two-Pole	Three-Pole	Two-Pole	Three-Pole
DK	10.0 (4.5)	11.5 (5.2)	—	—	—	—
KDB	10.0 (4.5)	11.5 (5.2)	—	—	—	—
KD	10.0 (4.5)	11.5 (5.2)	7.5 (3.4)	8.5 (3.9)	1.5 (0.7)	1.5 (0.7)
HKD, HKDB	10.0 (4.5)	11.5 (5.2)	7.5 (3.4)	8.5 (3.9)	1.5 (0.7)	1.5 (0.7)
KDC	10.0 (4.5)	11.5 (5.2)	7.5 (3.4)	8.5 (3.9)	1.5 (0.7)	1.5 (0.7)

Note

① Weights shown are for thermal-magnetic trip units. Three-pole electronic trip units weigh 2.5 lbs (1.1 kg).

Typical L-Frame Circuit Breaker

Contents

Description	*Page*
Product Overview	**V4-T2-116**
Standards and Certifications	**V4-T2-117**
Quick Reference	**V4-T2-118**
G-Frame (15–100 Amperes)	**V4-T2-121**
F-Frame (10–225 Amperes)	**V4-T2-135**
J-Frame (70–250 Amperes)	**V4-T2-153**
K-Frame (70–400 Amperes)	**V4-T2-161**
L-Frame (125–600 Amperes)	
Catalog Number Selection	**V4-T2-186**
Product Selection	**V4-T2-188**
Accessories	**V4-T2-204**
Technical Data and Specifications	**V4-T2-206**
Dimensions and Weights	**V4-T2-210**
M-Frame (300–800 Amperes)	**V4-T2-211**
N-Frame (400–1200 Amperes)	**V4-T2-222**
R-Frame (800–2500 Amperes)	**V4-T2-237**
Motor Circuit Protectors (MCP)	**V4-T2-256**
Motor Protection Circuit Breakers (MPCB)	**V4-T2-267**
Type ELC Current Limiter Attachment (Size 0–4)	**V4-T2-269**
Current Limiting Circuit Breaker Module	**V4-T2-270**
Internal Accessories	**V4-T2-273**
External Accessories	**V4-T2-304**

L-Frame (125–600 Amperes)

Product Description

- All Eaton L-Frame circuit breakers are HACR rated
- L-Frame circuit breakers are available as individual components (frame, trip unit, terminals), or factory assembled complete breakers
- L-Frame circuit breakers with non-interchangeable trip units are suitable for reverse feed use

Standards and Certifications

- CE marked

CE

Catalog Number Selection

This information is presented only as an aid to understanding catalog numbers. It is not to be used to build catalog numbers for circuit breakers or trip units.

LD-Frame with Thermal-Magnetic Trip Unit Technology

Thermal-Magnetic Breakers and Frame ①

LD 3 600 F

Circuit Breaker/ Frame Type
LDB
LD
HLD
LDC
CLD
CHLD
CLDC

Number of Poles
2 = Two-pole
3 = Three-pole
4 = Four-pole

Circuit Breaker/ Frame Ampere Rating
300
350
400
450
500
600

Suffix
C = Copper terminals
F = Frame only (600 A only)
K = High magnetic molded case switch
V = 50 °C (thermal-magnetic trip units only)
W = Without terminals
X = Load side terminals only
Y = Line side terminals only

Thermal-Magnetic Trip Unit ①

LT 3 400 T

Trip Unit Type
LT = Thermal-magnetic

Number of Poles
2 = Two-pole
3 = Three-pole
4 = Four-pole

Trip Unit Rating/Plug Ampere Rating
300
350
400
450
500
600

Suffix
T = Trip unit thermal-magnetic fixed thermal adjustable magnetic
V = 50 °C calibration (thermal-magnetic trip units only)

Note

① Frames are the same for thermal-magnetic or 310+ electronic trip units, e.g., **LD3600F**, **HLD3600F**, etc.

LD-Frame with 310+ Electronic Trip Unit Technology

310+ Circuit Breakers

LDB 3 600 F T36 B22ZG W

Performance at 480 Vac
- **LDB** = 35 kAIC
- **HLDB** = 65 kAIC
- **LDCB** = 100 kAIC
- **CLDB** = 35 kAIC, 100% rated
- **CHLDB** = 65 kAIC, 100% rated
- **CLDCB** = 100 kAIC, 100% rated

Number of Poles
- **3** = Three-pole
- **4** = Four-pole

Amperes
- **600**

Designation
- **F**

Trip Unit
- **T33** = 310+ Electronic LS
- **T32** = 310+ Electronic LSI
- **T35** = 310+ Electronic LSG ①
- **T36** = 310+ Electronic LSIG ①
- **T38** = 310+ Electronic LSI with Maintenance Mode
- **T39** = 310+ Electronic LSIG with Maintenance Mode ①

Features
- **Blank** = No feature
- **B20** = High load alarm
- **B21** = Ground fault alarm, with trip ①
- **B22** = Ground fault alarm, no trip ①
- **ZG** = Zone selective interlocking

Terminals
- **W** = No terminals

310+ Electronic Trip Units ②

LES 3 600 LSIG B22ZG

Trip Unit Type
- **LES**

Number of Poles
- **3** = Three-pole
- **4** = Four-pole

Amperes
- **600**

Trip Unit
- **LS** = 310+ Electronic LS
- **LSI** = 310+ Electronic LSI
- **LSG** = 310+ Electronic LSG ①
- **LSIG** = 310+ Electronic LSIG ①
- **ALSI** = 310+ Electronic LSI with Maintenance Mode
- **ALSIG** = 310+ Electronic LSIG with Maintenance Mode ①

Features
- **Blank** = No feature
- **B20** = High load alarm
- **B21** = Ground fault alarm, with trip ①
- **B22** = Ground fault alarm, no trip ①
- **ZG** = Zone selective interlocking

LD-Frame with OPTIM Electronic Trip Unit Technology

OPTIM Circuit Breakers

LD 3 125 T5 7 W

Circuit Breaker/ Frame Type
- **LD**
- **HLD**
- **LDC**
- **CLD**
- **CHLD**
- **CLDC**

Number of Poles
- **3** = Three-pole

Circuit Breaker/ Frame Ampere Rating
- **125** (Available on Model 1050 only)
- **250** (Available on Model 1050 only)
- **400**
- **600**

Trip Model
- **T5** = Model 550
- **T10** = Model 1050

Trip Type
- **2** = LSI (550 only)
- **6** = LSIG
- **7** = LSIA

Suffix
- **W** = Without terminals

Notes

① Not available in four-pole configurations.

② Frames are the same for thermal-magnetic or 310+ electronic trip units, e.g., **LD3600F**, **HLD3600F**, etc.

Product Selection

Types LD, HLD and LDC Thermal-Magnetic Circuit Breakers with Interchangeable Trip Units

Maximum Continuous Ampere Rating at 40 °C ①	Standard Interrupting Capacity 600 Vac Rated 35 kAIC at 480 Vac Factory Assembled Circuit Consisting of Frame, Trip Unit and Terminals Catalog Number	High Interrupting Capacity 600 Vac Rated 65 kAIC at 480 Vac Factory Assembled Circuit Consisting of Frame, Trip Unit and Terminals Catalog Number	Ultra High Interrupting Capacity Current Limiting 600 Vac Rated 100 kAIC at 480 Vac Factory Assembled Circuit Consisting of Frame, Trip Unit and Terminals Catalog Number	Thermal-Magnetic Trip Unit Only For Use with Standard or High or Ultra High Interrupting Frames Catalog Number	Standard Terminals Only See Page V4-T2-203 for Optional Terminals Catalog Number
Two-Pole					
300	LD2300	HLD2300	LDC2300	LT2300T	TA602LD ②
350	LD2350	HLD2350	LDC2350	LT2350T	TA602LD ②
400	LD2400	HLD2400	LDC2400	LT2400T	TA602LD ②
450	LD2450	HLD2450	LDC2450	LT2450T	TA602LD ②
500	LD2500	HLD2500	LDC2500	LT2500T	TA602LD ②
600	LD2600	HLD2600	LDC2600	LT2600T	2TA603LDK ③
Three-Pole					
300	LD3300	HLD3300	LDC3300	LT3300T	TA602LD ②
350	LD3350	HLD3350	LDC3350	LT3350T	TA602LD ②
400	LD3400	HLD3400	LDC3400	LT3400T	TA602LD ②
450	LD3450	HLD3450	LDC3450	LT3450T	TA602LD ②
500	LD3500	HLD3500	LDC3500	LT3500T	TA602LD ②
600	LD3600	HLD3600	LDC3600	LT3600T	3TA603LDK ③
Four-Pole ④					
300	LD4300	HLD4300	LDC4300	LT4300T	TA602LD ②
350	LD4350	HLD4350	LDC4350	LT4350T	TA602LD ②
400	LD4400	HLD4400	LDC4400	LT4400T	TA602LD ②
450	LD4450	HLD4450	LDC4450	LT4450T	TA602LD ②
500	LD4500	HLD4500	LDC4500	LT4500T	TA602LD ②
600	LD4600	HLD4600	LDC4600	LT4600T	4TA603LDK ③

Types LD, HLD and LDC Thermal-Magnetic Circuit Breakers—Frame Only

Standard Interrupting Capacity 600 Vac Rated 35 kAIC at 480 Vac Catalog Number	High Interrupting Capacity 600 Vac Rated 65 kAIC at 480 Vac Catalog Number	Ultra High Interrupting Capacity Current Limiting 600 Vac Rated 100 kAIC at 480 Vac Catalog Number
Two-Pole		
LD2600F	HLD2600F	LDC2600F
Three-Pole		
LD3600F	HLD3600F	LDC3600F
Four-Pole		
LD4600F	HLD4600F	LDC4600F

Notes

① Magnetic trip range 5–10 times continuous ampere rating.
② Individually packed.
③ Terminal kits contain one terminal for each pole and one terminal cover.
④ Neutral is in right pole.

Types LD, HLD and LDC Electronic Circuit Breakers with Interchangeable Trip Units

Order as individual components: breaker frame, trip unit and terminals. See 310+ adjustability specifications on **Page V4-T2-182**.

Types LD, HLD and LDC Electronic Circuit Breakers with Interchangeable 310+ Trip Units

	Circuit Breaker Frame Only			Digitrip RMS 310+ Trip Unit Only ①					
				Standard LS	Optional LSI	LSG	LSIG		
Maximum Continuous Ampere Rating at 40 °C	Standard Interrupting Capacity 600 Vac Rated 35 kAIC at 480 Vac	High Interrupting Capacity 600 Vac Rated 65 kAIC at 480 Vac	Ultra High Interrupting Capacity Current Limiting 600 Vac Rated 100 kAIC at 480 Vac	Adjustable Short Time Pickup with I^2t Short Delay Ramp	Independently Adjustable Short Time Pickup and Delay	Adjustable Short Time Pickup with I^2t Short Delay and Ground Fault Protection	Independently Adjustable Short Time Pickup and Ground Fault Protection	Neutral CT for LSG and LSIG ②③	Terminal Information
	Catalog Number			Catalog Number				Catalog Number	
Three-Pole									
600	**LD3600F**	**HLD3600F**	**LDC3600F**	**LES3600LS**	**LES3600LSI**	**LES3600LSG**	**LES3600LSIG**	**LGFCT600**	See **Page V4-T2-180**
Four-Pole ④									
600	**LD4600F**	**HLD4600F**	**LDC4600F**	**LES4600LS**	**LES4600LSI**	—	—	—	See **Page V4-T2-180**

Types LDB, HLDB and LDCB Electronic Circuit Breakers with Non-Interchangeable 310+ Electronic Trip Units Suitable for Reverse Feed

See 310+ adjustability specifications on **Page V4-T2-182**.

Circuit Breaker Frame Including Digitrip RMS 310+ Electronic Trip Unit Less Terminals Types LDB, HLDB and LDCB with Digitrip 310+ Non-Interchangeable Trip Units

		Factory Assembled Circuit Breaker Consisting of Frame and Trip Unit Less Terminals ①					
		Standard LS	Optional LSI	LSG	LSIG		
Maximum Continuous Ampere Rating at 40 °C	Number of Poles	Adjustable Short Time Pickup with I^2t Short Delay Ramp	Independently Adjustable Short Time Pickup and Delay	Adjustable Short Time Pickup with I^2t Short Delay and Ground Fault Protection	Independently Adjustable Short Time Pickup and Ground Fault Protection	Neutral CT for LSG and LSIG ②③	Terminal Information
		Catalog Number				Catalog Number	
600	**3**	**LDB3600FT33W**	**LDB3600FT32W**	**LDB3600FT35W**	**LDB3600FT36W**	**LGFCT600**	See **Page V4-T2-180**
600	**3**	**HLDB3600FT33W**	**HLDB3600FT32W**	**HLDB3600FT35W**	**HLDB3600FT36W**		
600	**3**	**LDCB3600FT33W**	**LDCB3600FT32W**	**LDCB3600FT35W**	**LDCB3600FT36W**		

100% Rated Types CLD, CHLD and CLDC Electronic Circuit Breakers with Interchangeable Trip Units

The NEC allows the breaker to be rated at 100% of its frame size in an assembly, provided that 90 °C wire is applied at the 75 °C ampacity. All 100% rated circuit breakers have electronic trip units. Order as individual components: breaker frame, trip unit and terminals. See 310+ adjustability specifications on **Page V4-T2-182**.

100% Rated Types CLD, CHLD and CLDC Electronic Circuit Breakers with 310+ Interchangeable Trip Units

	Circuit Breaker Frame Only			Digitrip RMS 310+ Trip Unit Only					
				Standard LS	Optional LSI	LSG	LSIG		
Maximum Continuous Ampere Rating at 40 °C	Standard Interrupting Capacity 600 Vac Rated 35 kAIC at 480 Vac	High Interrupting Capacity 600 Vac Rated 65 kAIC at 480 Vac	Ultra High Interrupting Capacity Current Limiting 600 Vac Rated 100 kAIC at 480 Vac	Adjustable Short Time Pickup with I^2t Short Delay Ramp	Independently Adjustable Short Time Pickup and Delay	Adjustable Short Time Pickup with I^2t Short Delay and Ground Fault Protection	Independently Adjustable Short Time Pickup and Ground Fault Protection	Neutral CT for LSG and LSIG ②③	Terminal Information
	Catalog Number							Catalog Number	
Three-Pole									
600	**CLD3600F**	**CHLD3600F**	**CLDC3600F**	**LES3600LS**	**LES3600LSI**	**LES3600LSG**	**LES3600LSIG**	**LGFCT600**	See **Page V4-T2-180**

Notes

① For AC use only.
② Required for four-wire systems if neutral protection is desired.
③ Included with LSG and LSIG trip units.
④ Neutral is in right pole.

Type LDB Thermal-Magnetic Circuit Breakers with Non-Interchangeable Trip Units ①

Maximum Continuous Ampere Rating	600 Vac Rated, 250 Vdc Complete Circuit Breaker Without Line and Load Terminals Catalog Number	With Standard Line and Load Terminals Only Catalog Number
Two-Pole		
300	LDB2300W	LDB2300
350	LDB2350W	LDB2350
400	LDB2400W	LDB2400
450	LDB2450W	LDB2450
500	LDB2500W	LDB2500
600	LDB2600W	LDB2600
Three-Pole		
300	LDB3300W	LDB3300
350	LDB3350W	LDB3350
400	LDB3400W	LDB3400
450	LDB3450W	LDB3450
500	LDB3500W	LDB3500
600	LDB3600W	LDB3600

Molded Case Switches

Eaton's molded case switches are used as compact switches in applications requiring high current switching capabilities. Molded case switches are constructed of circuit breaker components and are of the high instantaneous automatic type. Molded case switches are listed in accordance with Underwriters Laboratories Standard UL 489.

Molded Case Switches

Maximum Continuous Ampere Rating at 40 °C	600 Vac Maximum, 250 Vdc Circuit Breaker Only without Line and Load Terminals Catalog Number	Standard Terminals Only See Page V4-T2-203 for Optional Terminals Catalog Number
Two-Pole		
600	LD2600WK	2TA603LDK
600	LDB2600WK ①	2TA603LDK
600	HLD2600WK	2TA603LDK
Three-Pole		
600	LD3600WK	3TA603LDK
600	LDB3600WK ①	3TA603LDK
600	HLD3600WK	3TA603LDK
Four-Pole		
600	LD4600WK	4TA603LDK
600	LDB4600WK ①	4TA603LDK
600	HLD4600WK	4TA603LDK

Notes

① Factory sealed—suitable for reverse feed application.

Molded case switch will trip above 6000 amperes.

Digitrip OPTIM Electronic Circuit Breaker with Interchangeable Rating Plug

Order as individual components: Breaker Frame (which includes Trip Unit), Rating Plug, Terminals.

Digitrip OPTIM 550 Electronic Circuit Breaker with Interchangeable Rating Plug

Maximum Continuous Ampere Rating at 40 °C	Circuit Breaker Frame Only L – Adjustable Long Delay Pickup (I_r) with Adjustable Long Delay Time (I^2t or I^4t Response) ① S – Adjustable Short Delay Pickup with Adjustable Short Delay Time (I^2t or Flat Response) I – Adjustable Instantaneous Pickup G – Adjustable Ground Fault Pickup with Adjustable Ground Fault Time (I^2t or Flat Response) A – Adjustable Ground Fault Alarm with Adjustable Ground Fault Time (I^2t or Flat Response) OPTIM 550 ②			Digitrip OPTIM Rating Plug Only	
	LSI Catalog Number	LSIG Catalog Number	LSIA Catalog Number	Ampere Rating	Fixed Rating Plug Catalog Number
Three-Pole Standard Interrupting Capacity 600 Vac Rated 35 kAIC at 480 Vac					
125	**LD3125T52W**	**LD3125T56W**	**LD3125T57W**	—	**ORPL125A070**
				—	**ORPL125A090**
				—	**ORPL125A100**
				—	**ORPL125A110**
				—	**ORPL125A125**
250	**LD3250T52W**	**LD3250T56W**	**LD3250T57W**	—	**ORPL025A125**
				—	**ORPL025A150**
				—	**ORPL025A175**
				—	**ORPL025A200**
				—	**ORPL025A225**
				—	**ORPL025A250**
400	**LD3400T52W**	**LD3400T56W**	**LD3400T57W**	200	**ORPL40A200**
				225	**ORPL40A225**
				250	**ORPL40A250**
				300	**ORPL40A300**
				350	**ORPL40A350**
				400	**ORPL40A400**
600	**LD3600T52W**	**LD3600T56W**	**LD3600T57W**	300	**ORPL60A300**
				350	**ORPL60A350**
				400	**ORPL60A400**
				500	**ORPL60A500**
				600	**ORPL60A600**

Notes

① Long delay I^4t response selection limits short delay time to flat response.

② Zone interlocking, PowerNet, or both features can be added at the factory by adding suffixes **ZG**, **PN** or **ZGP** respectively to above catalog number.

Digitrip OPTIM 550 Electronic Circuit Breaker with Interchangeable Rating Plug, continued

Maximum Continuous Ampere Rating at 40 °C	Circuit Breaker Frame Only L – Adjustable Long Delay Pickup (I_r) with Adjustable Long Delay Time (I^2t or I^4t Response) ① S – Adjustable Short Delay Pickup with Adjustable Short Delay Time (I^2t or Flat Response) I – Adjustable Instantaneous Pickup G – Adjustable Ground Fault Pickup with Adjustable Ground Fault Time (I^2t or Flat Response) A – Adjustable Ground Fault Alarm with Adjustable Ground Fault Time (I^2t or Flat Response) OPTIM 550 ②			Digitrip OPTIM Rating Plug Only	
	LSI	LSIG	LSIA		Fixed Rating Plug
	Catalog Number	Catalog Number	Catalog Number	Ampere Rating	Catalog Number
Three-Pole High Interrupting Capacity 600 Vac Rated 65 kAIC at 480 Vac					
125	**HLD3125T52W**	**HLD3125T56W**	**HLD3125T57W**	70	**ORPL125A070**
				90	**ORPL125A090**
				100	**ORPL125A100**
				110	**ORPL125A110**
				125	**ORPL125A125**
250	**HLD3250T52W**	**HLD3250T56W**	**HLD3250T57W**	125	**ORPL025A125**
				150	**ORPL025A150**
				175	**ORPL025A175**
				200	**ORPL025A200**
				225	**ORPL025A225**
				250	**ORPL025A250**
400	**HLD3400T52W**	**HLD3400T56W**	**HLD3400T57W**	200	**ORPL40A200**
				225	**ORPL40A225**
				250	**ORPL40A250**
				300	**ORPL40A300**
				350	**ORPL40A350**
				400	**ORPL40A400**
600	**HLD3600T52W**	**HLD3600T56W**	**HLD3600T57W**	300	**ORPL60A300**
				350	**ORPL60A350**
				400	**ORPL60A400**
				500	**ORPL60A500**
				600	**ORPL60A600**

Notes

① Long delay I^4t response selection limits short delay time to flat response.

② Zone interlocking, PowerNet, or both features can be added at the factory by adding suffixes **ZG**, **PN** or **ZGP** respectively to above catalog number.

Digitrip OPTIM 550 Electronic Circuit Breaker with Interchangeable Rating Plug, continued

Maximum Continuous Ampere Rating at 40 °C	Circuit Breaker Frame Only L – Adjustable Long Delay Pickup (I_r) with Adjustable Long Delay Time (I^2t or I^4t Response) ① S – Adjustable Short Delay Pickup with Adjustable Short Delay Time (I^2t or Flat Response) I – Adjustable Instantaneous Pickup G – Adjustable Ground Fault Pickup with Adjustable Ground Fault Time (I^2t or Flat Response) A – Adjustable Ground Fault Alarm with Adjustable Ground Fault Time (I^2t or Flat Response) OPTIM 550 ②			Digitrip OPTIM Rating Plug Only	
	LSI	LSIG	LSIA		Fixed Rating Plug
	Catalog Number	Catalog Number	Catalog Number	Ampere Rating	Catalog Number
Three-Pole Ultra High Interrupting Capacity Current Limiting 600 Vac Rated 100 kAIC at 480 Vac					
125	**LDC3125T52W**	**LDC3125T56W**	**LDC3125T57W**	—	**ORPL125A070**
				—	**ORPL125A090**
				—	**ORPL125A100**
				—	**ORPL125A110**
				—	**ORPL125A125**
250	**LDC3250T52W**	**LDC3250T56W**	**LDC3250T57W**	—	**ORPL025A125**
				—	**ORPL025A150**
				—	**ORPL025A175**
				—	**ORPL025A200**
				—	**ORPL025A225**
				—	**ORPL025A250**
400	**LDC3400T52W**	**LDC3400T56W**	**LDC3400T57W**	200	**ORPL40A200**
				225	**ORPL40A225**
				250	**ORPL40A250**
				300	**ORPL40A300**
				350	**ORPL40A350**
				400	**ORPL40A400**
600	**LDC3600T52W**	**LDC3600T56W**	**LDC3600T57W**	300	**ORPL60A300**
				350	**ORPL60A350**
				400	**ORPL60A400**
				500	**ORPL60A500**
				600	**ORPL60A600**

Notes

① Long delay I^4t response selection limits short delay time to flat response.

② Zone interlocking, PowerNet, or both features can be added at the factory by adding suffixes **ZG**, **PN** or **ZGP** respectively to above catalog number.

Digitrip OPTIM Electronic Circuit Breaker with Interchangeable Rating Plug

Order as individual components: Breaker Frame (which includes Trip Unit), Rating Plug, Terminals.

2

Digitrip OPTIM 1050 Electronic Circuit Breaker with Interchangeable Rating Plug

	Circuit Breaker Frame Only L – Adjustable Long Delay Pickup (I_r) with Adjustable Long Delay Time (I^2t or I^4t Response) ① S – Adjustable Short Delay Pickup with Adjustable Short Delay Time (I^2t or Flat Response) I – Adjustable Instantaneous Pickup G – Adjustable Ground Fault Pickup with Adjustable Ground Fault Time (I^2t or Flat Response) A – Adjustable Ground Fault Alarm with Adjustable Ground Fault Time (I^2t or Flat Response)		Digitrip OPTIM Rating Plug Only	
	OPTIM 1050 ②③			
	LSIG	LSIA		Fixed Rating Plug
Maximum Continuous Ampere Rating at 40 °C	Catalog Number	Catalog Number	Ampere Rating	Catalog Number
Three-Pole Standard Interrupting Capacity 600 Vac Rated 35 kAIC at 480 Vac				
125	**LD3125T106W**	**LD3125T107W**	70	**ORPL125A070**
			90	**ORPL125A090**
			100	**ORPL125A100**
			110	**ORPL125A110**
			125	**ORPL125A125**
250	**LD3250T106W**	**LD3250T107W**	125	**ORPL025A125**
			150	**ORPL025A150**
			175	**ORPL025A175**
			200	**ORPL025A200**
			225	**ORPL025A225**
			250	**ORPL025A250**
400	**LD3400T106W**	**LD3400T107W**	200	**ORPL40A200**
			225	**ORPL40A225**
			250	**ORPL40A250**
			300	**ORPL40A300**
			350	**ORPL40A350**
			400	**ORPL40A400**
600	**LD3600T106W**	**LD3600T107W**	300	**ORPL60A300**
			350	**ORPL60A350**
			400	**ORPL60A400**
			500	**ORPL60A500**
			600	**ORPL60A600**

Notes

① Long delay I^4t response selection limits short delay time to flat response.
② One Form C auxiliary switch and one Form C bell alarm switch supplied with breaker as standard.
③ Factory sealed.

Digitrip OPTIM 1050 Electronic Circuit Breaker with Interchangeable Rating Plug, continued

	Circuit Breaker Frame Only L – Adjustable Long Delay Pickup (I_r) with Adjustable Long Delay Time (I^2t or I^4t Response) ① S – Adjustable Short Delay Pickup with Adjustable Short Delay Time (I^2t or Flat Response) I – Adjustable Instantaneous Pickup G – Adjustable Ground Fault Pickup with Adjustable Ground Fault Time (I^2t or Flat Response) A – Adjustable Ground Fault Alarm with Adjustable Ground Fault Time (I^2t or Flat Response)		Digitrip OPTIM Rating Plug Only	
Maximum Continuous Ampere Rating at 40 °C	OPTIM 1050 ②③ LSIG Catalog Number	LSIA Catalog Number	Ampere Rating	Fixed Rating Plug Catalog Number
Three-Pole High Interrupting Capacity 600 Vac Rated 65 kAIC at 480 Vac				
125	**HLD3125T106W**	**HLD3125T107W**	70	**ORPL125A070**
			90	**ORPL125A090**
			100	**ORPL125A100**
			110	**ORPL125A110**
			125	**ORPL125A125**
250	**HLD3250T106W**	**HLD3250T107W**	125	**ORPL025A125**
			150	**ORPL025A150**
			175	**ORPL025A175**
			200	**ORPL025A200**
			225	**ORPL025A225**
			250	**ORPL025A250**
400	**HLD3400T106W**	**HLD3400T107W**	200	**ORPL40A200**
			225	**ORPL40A225**
			250	**ORPL40A250**
			300	**ORPL40A300**
			350	**ORPL40A350**
			400	**ORPL40A400**
600	**HLD3600T106W**	**HLD3600T107W**	300	**ORPL60A300**
			350	**ORPL60A350**
			400	**ORPL60A400**
			500	**ORPL60A500**
			600	**ORPL60A600**

Notes

① Long delay I^4t response selection limits short delay time to flat response.
② One Form C auxiliary switch and one Form C bell alarm switch supplied with breaker as standard.
③ Factory sealed.

Digitrip OPTIM 1050 Electronic Circuit Breaker with Interchangeable Rating Plug, continued

Maximum Continuous Ampere Rating at 40 °C	Circuit Breaker Frame Only L – Adjustable Long Delay Pickup (I_r) with Adjustable Long Delay Time (I^2t or I^4t Response) ① S – Adjustable Short Delay Pickup with Adjustable Short Delay Time (I^2t or Flat Response) I – Adjustable Instantaneous Pickup G – Adjustable Ground Fault Pickup with Adjustable Ground Fault Time (I^2t or Flat Response) A – Adjustable Ground Fault Alarm with Adjustable Ground Fault Time (I^2t or Flat Response) OPTIM 1050 ②③ LSIG Catalog Number	LSIA Catalog Number	Digitrip OPTIM Rating Plug Only Ampere Rating	Fixed Rating Plug Catalog Number
Three-Pole Ultra High Interrupting Capacity Current Limiting 600 Vac Rated 100 kAIC at 480 Vac				
125	**LDC3125T106W**	**LDC3125T107W**	70	**ORPL125A070**
			90	**ORPL125A090**
			100	**ORPL125A100**
			110	**ORPL125A110**
			125	**ORPL125A125**
250	**LDC3250T106W**	**LDC3250T107W**	125	**ORPL025A125**
			150	**ORPL025A150**
			175	**ORPL025A175**
			200	**ORPL025A200**
			225	**ORPL025A225**
			250	**ORPL025A250**
400	**LDC3400T106W**	**LDC3400T107W**	200	**ORPL40A200**
			225	**ORPL40A225**
			250	**ORPL40A250**
			300	**ORPL40A300**
			350	**ORPL40A350**
			400	**ORPL40A400**
600	**LDC3600T106W**	**LDC3600T107W**	300	**ORPL60A300**
			350	**ORPL60A350**
			400	**ORPL60A400**
			500	**ORPL60A500**
			600	**ORPL60A600**

Notes

① Long delay I^4t response selection limits short delay time to flat response.
② One Form C auxiliary switch and one Form C bell alarm switch supplied with breaker as standard.
③ Factory sealed.

100% Rated Digitrip OPTIM Circuit Breakers with Interchangeable Rating Plug

Order as individual components: Breaker Frame (which includes Trip Unit), Rating Plug, Terminals.

100% Rated Digitrip OPTIM 550 Circuit Breakers with Interchangeable Rating Plug

Circuit Breaker Frame Only

L – Adjustable Long Delay Pickup (I_r) with Adjustable Long Delay Time (I^2t or I^4t Response) ①
S – Adjustable Short Delay Pickup with Adjustable Short Delay Time (I^2t or Flat Response)
I – Adjustable Instantaneous Pickup
G – Adjustable Ground Fault Pickup with Adjustable Ground Fault Time (I^2t or Flat Response)
A – Adjustable Ground Fault Alarm with Adjustable Ground Fault Time (I^2t or Flat Response)

Digitrip OPTIM Rating Plug Only

Maximum Continuous Ampere Rating at 40 °C	OPTIM 550 ② LSI Catalog Number	LSIG Catalog Number	LSIA Catalog Number	Ampere Rating	Fixed Rating Plug Catalog Number
Three-Pole Standard Interrupting Capacity 600 Vac Rated 35 kAIC at 480 Vac					
125	**CLD3125T52W**	**CLD3125T56W**	**CLD3125T57W**	70	**ORPL125A070**
				90	**ORPL125A090**
				100	**ORPL125A100**
				110	**ORPL125A110**
				125	**ORPL125A125**
250	**CLD3250T52W**	**CLD3250T56W**	**CLD3250T57W**	125	**ORPL025A125**
				150	**ORPL025A150**
				175	**ORPL025A175**
				200	**ORPL025A200**
				225	**ORPL025A225**
				250	**ORPL025A250**
400	**CLD3400T52W**	**CLD3400T56W**	**CLD3400T57W**	200	**ORPL40A200**
				225	**ORPL40A225**
				250	**ORPL40A250**
				300	**ORPL40A300**
				350	**ORPL40A350**
				400	**ORPL40A400**
600	**CLD3600T52W**	**CLD3600T56W**	**CLD3600T57W**	300	**ORPL60A300**
				350	**ORPL60A350**
				400	**ORPL60A400**
				500	**ORPL60A500**
				600	**ORPL60A600**

Notes

① Long delay I^4t response selection limits short delay time to flat response.

② Zone interlocking, PowerNet, or both features can be added at the factory by adding suffixes **ZG**, **PN** or **ZGP** respectively to above catalog number.

100% Rated Digitrip OPTIM 550 Circuit Breakers with Interchangeable Rating Plug, continued

Maximum Continuous Ampere Rating at 40 °C	Circuit Breaker Frame Only L – Adjustable Long Delay Pickup (I_r) with Adjustable Long Delay Time (I^2t or I^4t Response) ① S – Adjustable Short Delay Pickup with Adjustable Short Delay Time (I^2t or Flat Response) I – Adjustable Instantaneous Pickup G – Adjustable Ground Fault Pickup with Adjustable Ground Fault Time (I^2t or Flat Response) A – Adjustable Ground Fault Alarm with Adjustable Ground Fault Time (I^2t or Flat Response) OPTIM 550 ②			Digitrip OPTIM Rating Plug Only	
	LSI Catalog Number	LSIG Catalog Number	LSIA Catalog Number	Ampere Rating	Fixed Rating Plug Catalog Number
Three-Pole High Interrupting Capacity 600 Vac Rated 65 kAIC at 480 Vac					
125	**CHLD3125T52W**	**CHLD3125T56W**	**CHLD3125T57W**	70	**ORPL125A070**
				90	**ORPL125A090**
				100	**ORPL125A100**
				110	**ORPL125A125**
				125	**ORPL125A125**
250	**CHLD3250T52W**	**CHLD3250T56W**	**CHLD3250T57W**	125	**ORPL025A125**
				150	**ORPL025A150**
				175	**ORPL025A175**
				200	**ORPL025A200**
				225	**ORPL025A225**
				250	**ORPL025A250**
400	**CHLD3400T52W**	**CHLD3400T56W**	**CHLD3400T57W**	200	**ORPL40A200**
				225	**ORPL40A225**
				250	**ORPL40A250**
				350	**ORPL40A350**
				400	**ORPL40A400**
600	**CHLD3600T52W**	**CHLD3600T56W**	**CHLD3600T57W**	300	**ORPL60A300**
				350	**ORPL60A350**
				400	**ORPL60A400**
				500	**ORPL60A500**
				600	**ORPL60A600**

Notes

① Long delay I^4t response selection limits short delay time to flat response.

② Zone interlocking, PowerNet, or both features can be added at the factory by adding suffixes **ZG**, **PN** or **ZGP** respectively to above catalog number.

100% Rated Digitrip OPTIM 550 Circuit Breakers with Interchangeable Rating Plug, continued

Circuit Breaker Frame Only

L – Adjustable Long Delay Pickup (I_r) with Adjustable Long Delay Time (I^2t or I^4t Response) ①
S – Adjustable Short Delay Pickup with Adjustable Short Delay Time (I^2t or Flat Response)
I – Adjustable Instantaneous Pickup
G – Adjustable Ground Fault Pickup with Adjustable Ground Fault Time (I^2t or Flat Response)
A – Adjustable Ground Fault Alarm with Adjustable Ground Fault Time (I^2t or Flat Response)

Digitrip OPTIM Rating Plug Only

Maximum Continuous Ampere Rating at 40 °C	OPTIM 550 ② LSI Catalog Number	LSIG Catalog Number	LSIA Catalog Number	Ampere Rating	Fixed Rating Plug Catalog Number
Three-Pole Ultra High Interrupting Capacity Current Limiting 600 Vac Rated 100 kAIC at 480 Vac					
125	**CLDC3125T52W**	**CLDC3125T56W**	**CLDC3125T57W**	70	**ORPL125A070**
				90	**ORPL125A090**
				100	**ORPL125A100**
				110	**ORPL125A110**
				125	**ORPL125A125**
250	**CLDC3250T52W**	**CLDC3250T56W**	**CLDC3250T57W**	125	**ORPL025A125**
				150	**ORPL025A150**
				175	**ORPL025A175**
				200	**ORPL025A200**
				225	**ORPL025A225**
				250	**ORPL025A250**
400	**CLDC3400T52W**	**CLDC3400T56W**	**CLDC3400T57W**	200	**ORPL40A200**
				225	**ORPL40A225**
				250	**ORPL40A250**
				300	**ORPL40A300**
				350	**ORPL40A350**
				400	**ORPL40A400**
600	**CLDC3600T52W**	**CLDC3600T56W**	**CLDC3600T57W**	300	**ORPL60A300**
				350	**ORPL60A350**
				400	**ORPL60A400**
				500	**ORPL60A500**
				600	**ORPL60A600**

Notes

① Long delay I^4t response selection limits short delay time to flat response.

② Zone interlocking, PowerNet, or both features can be added at the factory by adding suffixes **ZG**, **PN** or **ZGP** respectively to above catalog number.

100% Rated Digitrip OPTIM 1050 Circuit Breakers with Interchangeable Rating Plug

Maximum Continuous Ampere Rating at 40 °C	Circuit Breaker Frame Only L – Adjustable Long Delay Pickup (I_r) with Adjustable Long Delay Time (I^2t or I^4t Response) ① S – Adjustable Short Delay Pickup with Adjustable Short Delay Time (I^2t or Flat Response) I – Adjustable Instantaneous Pickup G – Adjustable Ground Fault Pickup with Adjustable Ground Fault Time (I^2t or Flat Response) A – Adjustable Ground Fault Alarm with Adjustable Ground Fault Time (I^2t or Flat Response) OPTIM 1050 ②③ LSIG Catalog Number	LSIA Catalog Number	Digitrip OPTIM Rating Plug Only Ampere Rating	Fixed Rating Plug Catalog Number
Three-Pole Standard Interrupting Capacity 600 Vac Rated 35 kAIC at 480 Vac				
125	**CLD3125T106W**	**CLD3125T107W**	70	**ORPL125A070**
			90	**ORPL125A090**
			100	**ORPL125A100**
			110	**ORPL125A110**
			125	**ORPL125A125**
250	**CLD3250T106W**	**CLD3250T107W**	125	**ORPL025A125**
			150	**ORPL025A150**
			175	**ORPL025A175**
			200	**ORPL025A200**
			225	**ORPL025A225**
			250	**ORPL025A250**
400	**CLD3400T106W**	**CLD3400T107W**	200	**ORPL40A200**
			225	**ORPL40A225**
			250	**ORPL40A250**
			300	**ORPL40A300**
			350	**ORPL40A350**
			400	**ORPL40A400**
600	**CLD3600T106W**	**CLD3600T107W**	300	**ORPL60A300**
			350	**ORPL60A350**
			400	**ORPL60A400**
			500	**ORPL60A500**
			600	**ORPL60A600**

Notes

① Long delay I^4t response selection limits short delay time to flat response.
② One Form C auxiliary switch and one Form C bell alarm switch supplied with breaker as standard.
③ Factory sealed.

100% Rated Digitrip OPTIM 1050 Circuit Breakers with Interchangeable Rating Plug, continued

Circuit Breaker Frame Only

L – Adjustable Long Delay Pickup (I_r) with Adjustable Long Delay Time (I^2t or I^4t Response) ①
S – Adjustable Short Delay Pickup with Adjustable Short Delay Time (I^2t or Flat Response)
I – Adjustable Instantaneous Pickup
G – Adjustable Ground Fault Pickup with Adjustable Ground Fault Time (I^2t or Flat Response)
A – Adjustable Ground Fault Alarm with Adjustable Ground Fault Time (I^2t or Flat Response)

Digitrip OPTIM Rating Plug Only

Maximum Continuous Ampere Rating at 40 °C	OPTIM 1050 ②③ LSIG Catalog Number	LSIA Catalog Number	Ampere Rating	Fixed Rating Plug Catalog Number
Three-Pole High Interrupting Capacity 600 Vac Rated 65 kAIC at 480 Vac				
125	**CHLD3125T106W**	**CHLD3125T107W**	70	**ORPL125A070**
			90	**ORPL125A090**
			100	**ORPL125A100**
			110	**ORPL125A110**
			125	**ORPL125A125**
250	**CHLD3250T106W**	**CHLD3250T107W**	125	**ORPL025A125**
			150	**ORPL025A150**
			175	**ORPL025A175**
			200	**ORPL025A200**
			225	**ORPL025A225**
			250	**ORPL025A250**
400	**CHLD3400T106W**	**CHLD3400T107W**	200	**ORPL40A200**
			225	**ORPL40A225**
			250	**ORPL40A250**
			300	**ORPL40A300**
			350	**ORPL40A350**
			400	**ORPL40A400**
600	**CHLD3600T106W**	**CHLD3600T107W**	300	**ORPL60A300**
			350	**ORPL60A350**
			400	**ORPL60A400**
			500	**ORPL60A500**
			600	**ORPL60A600**

Notes

① Long delay I^4t response selection limits short delay time to flat response.
② One Form C auxiliary switch and one Form C bell alarm switch supplied with breaker as standard.
③ Factory sealed.

100% Rated Digitrip OPTIM 1050 Electronic Circuit Breaker with Interchangeable Rating Plug, continued

	Circuit Breaker Frame Only		Digitrip OPTIM Rating Plug Only	
	L – Adjustable Long Delay Pickup (I_r) with Adjustable Long Delay Time (I^2t or I^4t Response) ①			
	S – Adjustable Short Delay Pickup with Adjustable Short Delay Time (I^2t or Flat Response)			
	I – Adjustable Instantaneous Pickup			
	G – Adjustable Ground Fault Pickup with Adjustable Ground Fault Time (I^2t or Flat Response)			
	A – Adjustable Ground Fault Alarm with Adjustable Ground Fault Time (I^2t or Flat Response)			
Maximum Continuous Ampere Rating at 40 °C	OPTIM 1050 ②③			
	LSIG	LSIA		Fixed Rating Plug
	Catalog Number	Catalog Number	Ampere Rating	Catalog Number
Three-Pole Ultra High Interrupting Capacity Current Limiting 600 Vac Rated 100 kAIC at 480 Vac				
125	**CLDC3125T106W**	**CLDC3125T107W**	70	**ORPL125A070**
			90	**ORPL125A090**
			100	**ORPL125A100**
			110	**ORPL125A110**
			125	**ORPL125A125**
250	**CLDC3250T106W**	**CLDC3250T107W**	125	**ORPL025A125**
			150	**ORPL025A150**
			175	**ORPL025A175**
			200	**ORPL025A200**
			225	**ORPL025A225**
			250	**ORPL025A250**
400	**CLDC3400T106W**	**CLDC3400T107W**	200	**ORPL40A200**
			225	**ORPL40A225**
			250	**ORPL40A250**
			300	**ORPL40A300**
			350	**ORPL40A350**
			400	**ORPL40A400**
600	**CLDC3600T106W**	**CLDC3600T107W**	300	**ORPL60A300**
			350	**ORPL60A350**
			400	**ORPL60A400**
			500	**ORPL60A500**
			600	**ORPL60A600**

Notes

① Long delay I^4t response selection limits short delay time to flat response.
② One Form C auxiliary switch and one Form C bell alarm switch supplied with breaker as standard.
③ Factory sealed.

Accessories Selection Guide and Ordering Information

Line and Load Terminals

Eaton's line and load terminals provide wire connecting capabilities for specific ranges of continuous current ratings and wire types. All terminals comply with Underwriters Laboratories Standards UL 486A and UL 486B and CSA Standard C22.2 No. 65M. Unless otherwise specified, L-Frame circuit breaker line and load terminals are shipped separately for field installation.

The wire connecting terminal is secured with two pan-head, slotted screws and lockwashers that can be checked for the correct torque loading or retightened from the front of the circuit breaker before installation of the conductors. (Applies to all styles.) The circuit breaker line/load terminal conductors are positioned in the conducting holes in the wire connecting terminal and are secured with recessed socket screws that are tightened to the correct torque loading from the front of the circuit breaker.

Ordering Information

L-Frame circuit breakers use Cu/Al terminals as standard. When optional copper terminals are required, order by catalog Number. Specify if factory installation is required.

Terminals

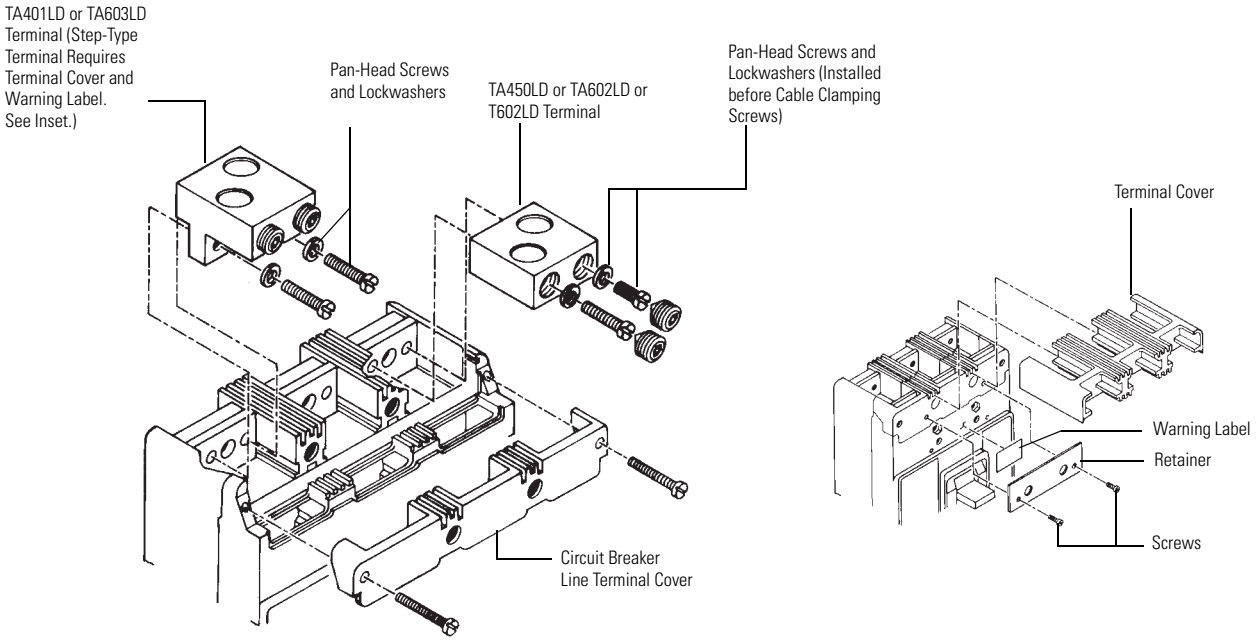

Line and Load Terminals

Maximum Breaker Amperes	Terminal Body Material	Wire Type	AWG Wire Range/Number of Conductors	Metric Wire Range mm²	Terminal Poles	Catalog Number	Terminals with Control Wire Termination Catalog Number
Standard Cu/Al Pressure Terminals							
400	Aluminum	Cu/Al	4/0–600 (1)	120–300	Two-pole kit ①	**2TA401LDK**	—
400	Aluminum	Cu/Al	4/0–600 (1)	120–300	Three-pole kit ①	**3TA401LDK**	—
400	Aluminum	Cu/Al	4/0–600 (1)	120–300	Four-pole kit ①	**4TA401LDK**	—
450	Aluminum	Cu/Al	4–4/0 (2)	25–95	②	**TA450LD**	—
500	Aluminum	Cu/Al	3/0–350 (2)	95–150	②	**TA602LD**	**TA602LDCW**
600	Aluminum	Cu/Al	400–500 (2)	185–240	Two-pole kit ①	**2TA603LDK**	**2TA603LDKCW**
600	Aluminum	Cu/Al	400–500 (2)	185–240	Three-pole kit ①	**3TA603LDK**	**3TA603LDKCW**
600	Aluminum	Cu/Al	400–500 (2)	185–240	Four-pole kit ①	**4TA603LDK**	**4TA603LDKCW**
Optional Copper and Cu/Al Pressure Type Terminals							
600	Copper	Cu	250–350 (2)	120–250	②	**T602LD**	**T602LDCW**

Notes

① Terminal kits contain one terminal for each pole and one terminal cover.

② Individually packed.

Accessories

Allowable Accessory Combinations

Different combinations of accessories can be supplied, depending on the types of accessories and the number of poles in the circuit breaker.

LD Frame Accessories

Description	Reference Page	Two-Pole ①, Three-Pole Left	Center	Right	Four-Pole Left	Center	Right	Neutral ②
Internal Accessories (Only One Internal Accessory Per Pole) ③								
Alarm lockout (Make/Break)	V4-T2-276	■		■	■		■	
Alarm lockout (2Make/2Break)	V4-T2-276	■		■	■		■	
Auxiliary switch (1A, 1B)	V4-T2-278	■		■	■		■	
Auxiliary switch (2A, 2B)	V4-T2-278	■		■	■		■	
Auxiliary switch (3A, 3B)	V4-T2-278	■		■	■		■	
Auxiliary switch (1A, 1B) and alarm switch combination	V4-T2-280	■		■	■		■	
Auxiliary switch (2A, 2B) and alarm switch combination	V4-T2-280	■		■	■		■	
Shunt trip—standard ④	V4-T2-282	■		■	■		■	
Shunt trip—low energy ④	V4-T2-285	■		■	■		■	
Undervoltage release mechanism ④	V4-T2-291	■		■	■		■	
Eaton PowerNet communications kit (OPTIM 550)	V4-T2-293			■				
External Accessories								
End cap kit	V4-T2-308	●	●	●	●	●	●	●
Control wire terminal kit	V4-T2-309	●	●	●	●	●	●	●
Base mounting hardware	V4-T2-311	●	●	●	●	●	●	●
Terminal shields	V4-T2-313	●	●	●	●	●	●	●
Interphase barriers	V4-T2-313	●	●	●	●	●	●	●
Non-padlockable handle block	V4-T2-314		■			■		
Padlockable handle lock hasp	V4-T2-315	❑		❑	❑		❑	
Key interlock kit	V4-T2-316	❑		❑	❑		❑	
Sliding bar interlock—requires two breakers	V4-T2-317	●	●	●				
Walking beam interlock—requires two breakers	V4-T2-317	●	●	●	●	●	●	●
Electrical (motor) operator	V4-T2-318	●	●	●	●	●	●	●
Plug-in adapters	V4-T2-320	●	●	●	●	●	●	●
Rear connecting studs	V4-T2-321	●	●	●	●	●	●	●
Panelboard connecting straps	V4-T2-322	●	●	●	●	●	●	●
Handle mechanisms	V4-T2-432	●	●	●	●	●	●	●
Handle extension	V4-T2-447	●	●	●	●	●	●	●
Solid-state (electronic) portable test kit	V4-T2-324	●	●	●	●	●	●	●

Legend

■ Applicable in indicated pole position
❑ May be mounted on left or right pole—not both
● Accessory available/modification available

Notes

① Two-pole breaker supplied in three-pole frame. Current carrying parts omitted from center pole.
② Refer to Eaton for appropriate neutral pole accessory combinations.
③ OPTIM model 1050 is factory sealed and does not have the right pole space available for accessories.
④ Shunt trip and UVR cannot be mounted in right poles on LES or OPTIM trip units. Standard non-tripping internal accessories can be mounted in the left or right poles of LES and 550 OPTIM trip units.

LD Frame Accessories, continued

Description	Reference Page	Two-Pole ①, Three-Pole Left	Center	Right	Four-Pole Left	Center	Right	Neutral ②
OPTIM System Components Three Poles								
Ground fault alarm unit	**V4-T2-324**							
Potential transformer module	**V4-T2-324**							
Breaker interface module (BIM)	**V4-T2-325**							
Digitrip OPTIMizer	**V4-T2-325**							
Auxiliary power module	**V4-T2-325**							
Modifications (Refer to Eaton)								
Special calibration	—	●	●	●	●	●	●	●
Moisture fungus treatment	**V4-T2-116**	●	●	●	●	●	●	●
Freeze-tested circuit breakers	—	●	●	●	●	●	●	●
Marine/naval application	—	●	●	●	●	●	●	●

Legend

■ Applicable in indicated pole position
❑ May be mounted on left or right pole—not both
● Accessory available/modification available

310+ Electronic Trip Unit Accessories

Description	Catalog Number
Electronic portable test kit	**MTST230V** ③
Trip unit tamper protection wire seal	**5108A03H01**
External neutral sensor	**LGFCT600** ④
Breaker-mount cause-of-trip indication	**TRIP-LED**
Breaker-mount ammeter module	**DIGIVIEW**
Remote-mount ammeter module	**DIGIVIEWR06** ⑤

Notes

① Two-pole breaker supplied in three-pole frame. Current carrying parts omitted from center pole.
② Refer to Eaton for appropriate neutral pole accessory combinations.
③ MTST230V applies to 100–230 Vac.
④ Included with all LD LSG and LSIG trip units and breakers.
⑤ Includes 6 ft cable for remote mounting; NEMA 3R rated.

Technical Data and Specifications

UL 489 Interrupting Capacity Ratings ①

Circuit Breaker Type	Number of Poles	Interrupting Capacity (kA rms Symmetrical Amperes) Volts AC (50/60 Hz) 240	277	480	600	Volts DC 125	250 ②③
LDB	2, 3	65	—	35	25	—	22
LD	2, 3, 4	65	—	35	25	—	22
CLD ④	2, 3, 4	65	—	35	25	—	—
HLD, HLDB	2, 3, 4	100	—	65	35	—	25
CHLD ④	2, 3, 4	100	—	65	35	—	—
LDC, LDCB ⑤	2, 3, 4	200	—	100	50	—	30
CLDC ④⑤	2, 3, 4	200	—	100	50	—	—

IEC 947-2 Interrupting Capacity Ratings ①

Circuit Breaker Type	Number of Poles	Interrupting Capacity (kA Symmetrical Amperes) Volts AC (50/60 Hz) 240		415		690		Volts DC 250 ②③	
		I_{cu}	I_{cs}	I_{cu}	I_{cs}	I_{cu}	I_{cs}	I_{cu}	I_{cs}
LDB	2, 3	85	85	45	45	20	10	20	10
LD	2, 3, 4	85	85	45	45	20	10	20	10
CLD ④	2, 3, 4	85	85	45	45	20	10	—	—
HLD, HLDB	2, 3, 4	100	100	70	70	25	13	20	10
CHLD ④	2, 3, 4	100	100	70	70	25	13	—	—
LDC, LDCB	2, 3, 4	200	100	100	75	35	18	20	10
CLDC ④	2, 3, 4	200	100	100	75	35	18	—	—

UL 489 Current Limiting Data

Frame	Circuit	Ip (kA)	I^2T (10^6A^2S)
LDC	240 V/200 kA	64.80	6.80
LDC	480 V/100 kA	66.90	9.33
LDC	600 V/50 kA	54.30	8.92

Notes

① Utilization Category A circuit breakers.
② L/R = 8 milliseconds minimum.
③ Two-pole circuit breaker or two poles of three-pole circuit breaker. Incorporating thermal-magnetic trip unit only.
④ 100% rated breakers.
⑤ Current limiting.

310+ Specifications

Description	Specification
Trip Unit Type	Digitrip RMS 310+
Breaker Type	
Frame designation	LD
Frames available	600 A
Continuous current range (A)	250–600 A
Ground fault pickup (A)	120–600 A
Interrupting capacities at 480 Vac (kAIC)	35, 65, 100
100% rated	Yes
Protection	
Ordering options	LS, LSI, LSG, LSIG, ALSI, ALSIG
Arcflash Reduction Maintenance System (or Maintenance Mode)	Remote enabled on ALSI, ALSIG
Interchangeable trip unit	Yes
High load alarm (suffix B20) ①	Yes
Ground fault alarm with trip (suffix B21) ①	LSG, LSIG, ALSIG
Ground fault alarm, no trip (suffix B22) ①	LSG, LSIG, ALSIG
Zone selective interlocking (suffix ZG)	LSI, LSIG, ALSI, ALSIG
Cause of trip indication	Yes (via TRIP-LED or DIGIVIEW)
Thru-cover accessories	No

310+ Adjustability Specifications

Description		LD Frame Specification
310+ settings		600 A
I_r = continuous current or long delay pickup (amperes) (All 310+)	I_r	
	A	250
	B	300
	C	315
	D	350
	E	400
	F	450
	G	500
	H (= I_n)	600
t_r = long delay time (seconds) (All 310+)	2	2
	4	4
	7	7
	10	10
	12	12
	15	15
	20	20
	24	24
I_{sd} (x I_r) = short delay pickup (All 310+)	Position 1	2x
	Position 2	3x
	Position 3	4x
	Position 4	5x
	Position 5	6x
	Position 6	7x
	Position 7	8x
	Position 8	8x
	Position 9	8x
t_{sd} = short delay time I^2t (milliseconds) (LS and LSG)	Fixed	67 @10x
t_{sd} = short delay time flat (milliseconds) (LSI, LSIG, ALSI, ALSIG)	Position 1	Inst
	Position 2	120
	Position 3	300
I_g (x I_n) = ground fault pickup (amperes) (LSG, LSIG, ALSIG)	Position 1	120
	Position 2	180
	Position 3	240
	Position 4	360
	Position 5	480
	Position 6	600
t_g = ground fault delay time (milliseconds) (LSG, LSIG, ALSIG)	Position 1	Inst
	Position 2	120
	Position 3	300
Independently adjustable Instantaneous (Ii) setting	②	
Maintenance Mode pickup (2.5 x I_n) (amperes) (310+ with Maintenance Mode—ALSI and ALSIG)	Fixed	1500

Notes

① B2x suffixes cannot be combined with B2x suffixes.

② Not available for LD. Independently adjustable Ii setting available in LG, NG, and RG ALSI and ALSIG trip units.

Digitrip OPTIM Specifications

Trip Unit Type	Digitrip OPTIM 550	Digitrip OPTIM 1050
rms sensing	Yes	Yes
Breaker Type		
Frame	L	L
Ampere range	200–600 A	200–600 A
Interrupting rating at 480 volts	35, 65, 100 (kA)	35, 65, 100 (kA)
Protection		
Ordering options	LSI, LSI(A), LSIG	LSI(A), LSIG
Fixed rated plug (I_n)	Yes	Yes
Overtemperature trip	Yes	Yes
Long Delay Protection (L)		
Adjustable rating plug (I_n)	No	No
Long delay pickup	0.4–1.0 x (I_n)	0.4–1.0 x (I_n)
Long delay time I^2t	2–24 seconds	2–24 seconds
Long delay time I^4t	1–5 seconds	1–5 seconds
Long delay thermal memory	Yes	Yes
High load alarm	0.5–1.0 x I_r	0.5–1.0 x I_r
Short Delay Protection (S)		
Short delay pickup	150–800% x (I_r)	150–800% x (I_r)
Short delay time I^2t	100–500 ms	100–500 ms
Short delay time flat	100–500 ms	100–500 ms
Short delay time zone selective interlocking	Yes ①	Yes
Instantaneous Protection (I)		
Instantaneous pickup	200–800% x (I_n)	200–800% x (I_n)
Discriminator	Yes	Yes
Instantaneous override	Yes	Yes
Ground Fault Protection (G)		
Ground fault alarm	20–100% x (I_s)	20–100% x (I_s)
Ground fault pickup	20–100% x (I_s)	20–100% x (I_s)
Ground fault delay I^2t	100–500 ms	100–500 ms
Ground fault delay flat	100–500 ms	100–500 ms
Ground fault zone selective interlocking	Yes ①	Yes
Ground fault thermal memory	Yes	Yes

Legend

BIM = Breaker Interface Module
(A) = GF Alarm
I_s = Sensor Rating
I_n = Rating Plug
I_r = Long Delay Pickup Setting

Note

① Zone interlock kit.

Digitrip OPTIM Specifications, continued

Trip Unit Type	Digitrip OPTIM 550	Digitrip OPTIM 1050
System Diagnostics		
Status LEDs	Yes	Yes
Cause of trip LEDs	Yes	Yes
Magnitude of trip information	Yes	Yes
Remote signal contact—ground alarm	Yes ①	Yes
Local auxiliary and bell alarm contact	Optional	Included
System Monitoring		
Digital display	Yes ②	Yes ②
Current	Yes	Yes
Power and energy	No	Yes
Power quality—harmonics	No	Yes
Power factor	No	Yes
Communications		
PowerNet	Yes ③	Yes
Testing		
Testing method	OPTIMizer, BIM, PowerNet	OPTIMizer, BIM, PowerNet

Legend

BIM = Breaker Interface Module
(A) = GF Alarm
I_s = Sensor Rating
I_n = Rating Plug
I_r = Long Delay Pickup Setting

Notes

① Zone interlock kit.
② By OPTIMizer/BIM.
③ Eaton's PowerNet kit.

Dimensions and Weights

Dimensions in Inches (mm)

LD Frame

Number of Poles	Width	Height	Depth
2, 3	8.25 (209.6)	10.75 (273.1)	4.06 (103.1)
4	11.00 (279.4)	10.75 (273.1)	4.06 (103.1)

LD-Frame, Two- and Three-Pole

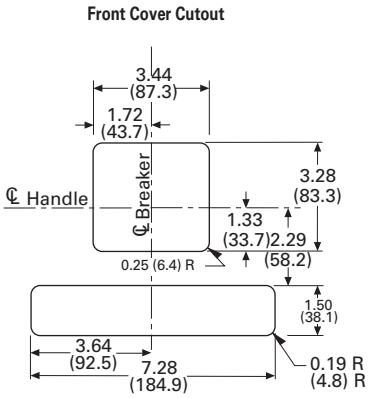

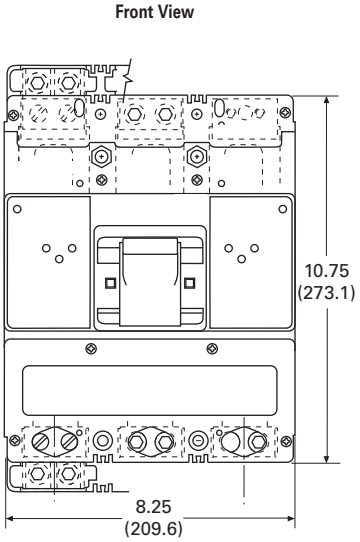

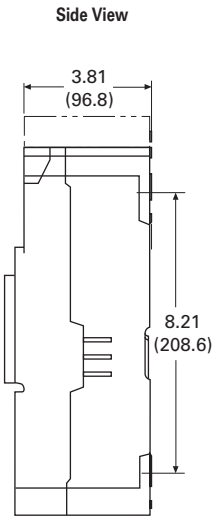

Approximate Shipping Weight, Lbs (kg)

LD Frame

Breaker Type	Complete Breaker			Frame Only			Trip Unit		
	Two-Pole	Three-Pole	Four-Pole	Two-Pole	Three-Pole	Four-Pole	Two-Pole	Three-Pole	Four-Pole
LD, HLD, LDC	18 (8.2)	20 (9.1)	25 (11.3)	14 (6.4)	15 (6.8)	20 (9.1)	3 (1.4)	4 (1.8)	5 (2.3)
LDB	18 (8.2)	20 (9.1)	25 (11.3)	—	—	—	—	—	—

Typical M-Frame Circuit Breaker

Contents

Description	*Page*
Product Overview	**V4-T2-116**
Standards and Certifications	**V4-T2-117**
Quick Reference	**V4-T2-118**
G-Frame (15–100 Amperes)	**V4-T2-121**
F-Frame (10–225 Amperes)	**V4-T2-135**
J-Frame (70–250 Amperes)	**V4-T2-153**
K-Frame (70–400 Amperes)	**V4-T2-161**
L-Frame (125–600 Amperes)	**V4-T2-185**
M-Frame (300–800 Amperes)	
Catalog Number Selection	**V4-T2-212**
Product Selection	**V4-T2-213**
Accessories	**V4-T2-218**
Technical Data and Specifications	**V4-T2-219**
Dimensions and Weights	**V4-T2-221**
Motor Circuit Protectors (MCP)	**V4-T2-256**
N-Frame (400–1200 Amperes)	**V4-T2-222**
R-Frame (800–2500 Amperes)	**V4-T2-237**
Motor Protection Circuit Breakers (MPCB)	**V4-T2-267**
Type ELC Current Limiter Attachment (Size 0–4)	**V4-T2-269**
Current Limiting Circuit Breaker Module	**V4-T2-270**
Internal Accessories	**V4-T2-273**
External Accessories	**V4-T2-304**

M-Frame (300–800 Amperes)

Product Description

- All Eaton M-Frame circuit breakers are HACR rated
- MDL-Frame circuit breakers are available as individual components (frame, trip unit, terminals), or factory assembled complete breakers
- MDLB, HMDLB-Frame circuit breakers with non-interchangeable trip units are suitable for reverse feed use

Standards and Certifications

- CE marked

CE

Catalog Number Selection

This information is presented only as an aid to understanding catalog numbers.
It is not to be used to build catalog numbers for circuit breakers or trip units.

MDL Frame with Thermal-Magnetic Trip Unit Technology

Thermal-Magnetic Breakers and Frame ①

MDL 3 800 F

Circuit Breaker/ Frame Type
MDL, MDLB HMDL, HMDLB

Number of Poles
2 = Two-pole **3** = Three-pole

Circuit Breaker/ Frame Ampere Rating	
300 ① **350** ① **400** **450**	**500** **600** **700** **800**

Suffix
F = Frame only (800 A only) **K** = High magnetic molded case switch **V** = 50 °C (thermal-magnetic trip units only) **W** = Without terminals **X** = Load side terminals only **Y** = Line side terminals only

Thermal-Magnetic Trip Unit ①

MT 3 800 T

Trip Unit Type
MT

Number of Poles
2 = Two-pole **3** = Three-pole

Trip Unit Rating/ Plug Ampere Rating	
300 ① **350** ① **400** **450**	**500** **600** **700** **800**

Suffix
T = Thermal-magnetic **V** = 50 °C (thermal-magnetic trip units only)

MDL Frame with 310+ Electronic Trip Unit Technology

310+ Circuit Breaker

MDLB 3 800 F T36 B21 W

Performance at 480 Vac
MDLB = 50 kAIC **HMDLB** = 65 kAIC **CMDLB** = 50 kAIC, 100% rated **CHMDLB** = 65 kAIC, 100% rated

Number of Poles
3 = Three-pole

Amperes
800

Designation
F

Trip Unit
T33 = 310+ Electronic LS **T32** = 310+ Electronic LSI **T35** = 310+ Electronic LSG **T36** = 310+ Electronic LSIG **T38** = 310+ Electronic LSI with Maintenance Mode **T39** = 310+ Electronic LSIG with Maintenance Mode

Features
Blank = No feature **B20** = High load alarm **B21** = Ground fault alarm, with trip **B22** = Ground fault alarm, no trip **ZG** = Zone selective interlocking

Terminals
W = No terminals

310+ Electronic Trip Unit ①

MES 3 800 ALSIG B21

Trip Unit Type
MES

Number of Poles
3 = Three-pole

Amperes
800

Trip Unit
LS = 310+ Electronic LS **LSI** = 310+ Electronic LSI **LSG** = 310+ Electronic LSG **LSIG** = 310+ Electronic LSIG **ALSI** = 310+ Electronic LSI with Maintenance Mode **ALSIG** = 310+ Electronic LSIG with Maintenance Mode

Features
Blank = No feature **B20** = High load alarm **B21** = Ground fault alarm, with trip **B22** = Ground fault alarm, no trip **ZG** = Zone selective interlocking

Note

① Frames are the same for thermal-magnetic or 310+ electronic trip units, e.g., **MDL3800F**, **HMDL3800F**, etc.

Product Selection

Types MDL and HMDL Thermal-Magnetic Circuit Breakers with Interchangeable Trip Units—Two-Pole

Maximum Continuous Ampere Rating at 40 °C	Standard Interrupting Capacity 600 Vac Rated 50 kAIC at 480 Vac: Factory Assembled Circuit Consisting of Frame, Trip Unit and Terminals Catalog Number	Standard Interrupting Capacity: Frame Only Catalog Number	High Interrupting Capacity 600 Vac Rated 65 kAIC at 480 Vac: Factory Assembled Circuit Consisting of Frame, Trip Unit and Terminals Catalog Number	High Interrupting Capacity: Frame Only Catalog Number	Thermal-Magnetic Trip Unit Only — For Use with Standard or High or Ultra High Interrupting Frames — Magnetic Trip Range is 5–10 Up Through 600 A; 4–8 on 700 and 800 A x Continuous Ampere Rating Catalog Number	Standard Terminals Only ① — See Page V4-T2-217 for Optional Terminals Catalog Number
300	**MDL2300**	**MDL2800F**	**HMDL2300**	**HMDL2800F**	**MT2300T**	**TA700MA1**
350	**MDL2350**		**HMDL2350**		**MT2350T**	**TA700MA1**
400	**MDL2400**		**HMDL2400**		**MT2400T**	**TA700MA1**
450	**MDL2450**		**HMDL2450**		**MT2450T**	**TA700MA1**
500	**MDL2500**		**HMDL2500**		**MT2500T**	**TA700MA1**
600	**MDL2600**		**HMDL2600**		**MT2600T**	**TA700MA1**
700	**MDL2700**		**HMDL2700**		**MT2700T**	**TA700MA1**
800	**MDL2800**		**HMDL2800**		**MT2800T**	**TA800MA2**

Types MDL and HMDL Thermal-Magnetic Circuit Breakers with Interchangeable Trip Units—Three-Pole

Maximum Continuous Ampere Rating at 40 °C	Standard Interrupting Capacity 600 Vac Rated 50 kAIC at 480 Vac: Factory Assembled Circuit Consisting of Frame, Trip Unit and Terminals Catalog Number	Standard Interrupting Capacity: Frame Only Catalog Number	High Interrupting Capacity 600 Vac Rated 65 kAIC at 480 Vac: Factory Assembled Circuit Consisting of Frame, Trip Unit and Terminals Catalog Number	High Interrupting Capacity: Frame Only Catalog Number	Thermal-Magnetic Trip Unit Only — For Use with Standard or High or Ultra High Interrupting Frames — Magnetic Trip Range is 5–10 Up Through 600 A; 4–8 on 700 and 800 A x Continuous Ampere Rating Catalog Number	Standard Terminals Only ① — See Page V4-T2-217 for Optional Terminals Catalog Number
300	**MDL3300**	**MDL3800F**	**HMDL3300**	**HMDL3800F**	**MT3300T**	**TA700MA1**
350	**MDL3350**		**HMDL3350**		**MT3400T**	**TA700MA1**
400	**MDL3400**		**HMDL3400**		**MT3400T**	**TA700MA1**
450	**MDL3450**		**HMDL3450**		**MT3450T**	**TA700MA1**
500	**MDL3500**		**HMDL3500**		**MT3500T**	**TA700MA1**
600	**MDL3600**		**HMDL3600**		**MT3600T**	**TA700MA1**
700	**MDL3700**		**HMDL3700**		**MT3700T**	**TA700MA1**
800	**MDL3800**		**HMDL3800**		**MT3800T**	**TA800MA2**

Note

① Two terminals are required per pole.

Types MDLB and HMDLB Thermal-Magnetic Circuit Breakers with Non-Interchangeable Trip Units—Two-Pole ①

Maximum Continuous Ampere Rating at 40 °C	Standard Interrupting Capacity 600 Vac Rated 50 kAIC at 480 Vac Factory Assembled Circuit Consisting of Frame, Trip Unit and Terminals Catalog Number	High Interrupting Capacity 600 Vac Rated 65 kAIC at 480 Vac Factory Assembled Circuit Consisting of Frame, Trip Unit and Terminals Catalog Number	Standard Terminals Only ② See Page V4-T2-217 for Optional Terminals Catalog Number
300	MDLB2300	HMDLB2300	TA700MA1
350	MDLB2350	HMDLB2350	TA700MA1
400	MDLB2400	HMDLB2400	TA700MA1
450	MDLB2450	HMDLB2450	TA700MA1
500	MDLB2500	HMDLB2500	TA700MA1
600	MDLB2600	HMDLB2600	TA700MA1
700	MDLB2700	HMDLB2700	TA700MA1
800	MDLB2800	HMDLB2800	TA800MA2

Types MDLB and HMDLB Thermal-Magnetic Circuit Breakers with Non-Interchangeable Trip Units—Three-Pole ①

Maximum Continuous Ampere Rating at 40 °C	Standard Interrupting Capacity 600 Vac Rated 50 kAIC at 480 Vac Factory Assembled Circuit Consisting of Frame, Trip Unit and Terminals Catalog Number	High Interrupting Capacity 600 Vac Rated 65 kAIC at 480 Vac Factory Assembled Circuit Consisting of Frame, Trip Unit and Terminals Catalog Number	Standard Terminals Only ② See Page V4-T2-217 for Optional Terminals Catalog Number
300	MDLB3300	HMDLB3300	TA700MA1
350	MDLB3350	HMDLB3350	TA700MA1
400	MDLB3400	HMDLB3400	TA700MA1
450	MDLB3450	HMDLB3450	TA700MA1
500	MDLB3500	HMDLB3500	TA700MA1
600	MDLB3600	HMDLB3600	TA700MA1
700	MDLB3700	HMDLB3700	TA700MA1
800	MDLB3800	HMDLB3800	TA800MA2

Notes

① Factory sealed for reverse feed application.

② Two terminals are required per pole.

Types MDL and HMDL Electronic Circuit Breakers with Interchangeable Trip Units

Order as Individual Components: breaker frame, trip unit and terminals.
See 310+ adjustability specifications on **Page V4-T2-220**.

Types MDL and HMDL Electronic Circuit Breakers with Interchangeable 310+ Trip Units—Three-Pole

	Circuit Breaker Frame Only		Digitrip RMS 310+ Trip Unit Only ①					
			Standard LS	Optional LSI	LSG	LSIG		
Maximum Continuous Ampere Rating at 40 °C	Standard Interrupting Capacity 600 Vac Rated 50 kAIC at 480 Vac Catalog Number	High Interrupting Capacity 600 Vac Rated 65 kAIC at 480 Vac Catalog Number	Adjustable Short Time Pickup with I^2t Short Delay Ramp Catalog Number	Independently Adjustable Short Time Pickup and Delay	Adjustable Short Time Pickup with I^2t Short Delay and Ground Fault Protection	Independently Adjustable Short Time Pickup and Ground Fault Protection	Neutral CT for LSG and LSIG ②③ Catalog Number	Terminal Information
800	MDL3800F	HMDL3800F	MES3800LS	MES3800LSI	MES3800LSG	MES3800LSIG	LGFCT600	See **Page V4-T2-218**

Types MDLB and HMDLB Electronic Circuit Breakers with Non-Interchangeable 310+ Trip Units ④

	Factory-Assembled Circuit Breaker Consisting of Frame and Trip Unit Less Terminals				
	LS	LSI	LSG	LSIG	
Maximum Continuous Ampere Rating at 40 °C	Adjustable Short Time Pickup with I^2t Short Delay Ramp Catalog Number	Independently Adjustable Short Time Pickup and Delay	Adjustable Short Time Pickup with I^2t Short Delay and Ground Fault Protection	Independently Adjustable Short Time Pickup and Ground Fault Protection	Neutral CT for LSG and LSIG ②③ Catalog Number
Three-Pole Standard Interrupting Capacity 600 Vac Rated 50 kAIC at 480 Vac					
800	MDLB3800FT33W	MDLB3800FT32W	MDLB3800FT35W	MDLB3800FT36W	LGFCT600
Three-Pole High Interrupting Capacity 600 Vac Rated 65 kAIC at 480 Vac					
800	HMDLB3800FT33W	HMDLB3800FT32W	HMDLB3800FT35W	HMDLB3800FT36W	LGFCT600

100% Rated Types CMDL and CHMDL Electronic Circuit Breakers with Interchangeable Trip Units

The NEC allows the breaker to be rated at 100% of its frame size in an assembly, provided that 90 °C wire is applied at the 75 °C ampacity. All 100% rated circuit breakers have electronic trip units. Order as individual components: breaker frame, trip unit and terminals. See 310+ adjustability specifications on **Page V4-T2-220**.

100% Rated Types CMDL and CHMDL Electronic Circuit Breakers with Interchangeable 310+ Trip Units—Three-Pole

	Circuit Breaker Frame Only		Digitrip RMS 310+ Trip Unit Only ①					
			Standard LS	Options LSI	LSG	LSIG		
Maximum Continuous Ampere Rating at 40 °C	Standard Interrupting Capacity 600 Vac Rated 50 kAIC at 480 Vac Catalog Number	High Interrupting Capacity 600 Vac Rated 65 kAIC at 480 Vac	Adjustable Short Time Pickup with I^2t Short Delay Ramp	Independently Adjustable Short Time Pickup and Delay	Adjustable Short Time Pickup with I^2t Short Delay and Ground Fault Protection	Independently Adjustable Short Time Pickup and Ground Fault Protection	Neutral CT for LSG and LSIG ②③ Catalog Number	Terminal Information
800	CMDL3800F	CHMDL3800F	MES3800LS	MES3800LSI	MES3800LSG	MES3800LSIG	LGFCT600	See **Page V4-T2-218**

Notes

① For AC use only.
② Required for four-wire systems if neutral protection is desired.
③ Included with LSG and LSIG trip units or breakers.
④ Factory sealed, suitable for reverse feed application. CMDLB and CHMDLB are also available.

Molded Case Switches

Eaton's molded case switches are used as compact switches in applications requiring high current switching capabilities. Molded case switches are constructed of circuit breaker components and are of the high instantaneous automatic type. Molded case switches are listed in accordance with Underwriters Laboratories Standard UL 489.

Molded Case Switches

Maximum Continuous Ampere Rating at 40 °C	600 Vac Maximum, 250 Vdc Circuit Breaker Only without Line and Load Terminals Catalog Number
Two-Pole	
800	**MDL2800WK**
	MDLB2800WK ①
	HMDL2800WK
Three-Pole	
800	**MDL3800WK**
	MDLB3800WK ①
	HMDL3800WK

Notes

① MDLB and HMDLB are suitable for reverse feed applications.

Molded case switch may trip above 6000 amperes.

Accessories Selection Guide and Ordering Information

Line and Load Terminals

M-Frame circuit breakers use Cu/Al terminals as standard. When optional copper or Cu/Al terminals are required, order by catalog number. Specify if factory installation is required.

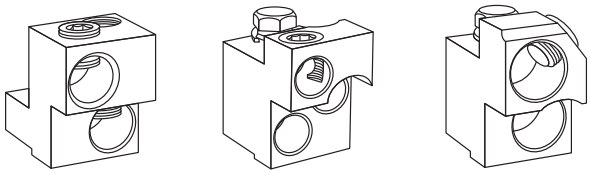

TA700MA1 **TA800MA2** **TA801MA**

Line and Load Terminals

Maximum Breaker Amperes	Terminal Body Material	Wire Type	AWG Wire Range/No. Conductors	Terminal Catalog Number	Terminals with Control Wire Termination Catalog Number
Standard Cu/Al Pressure Terminals					
700	Aluminum	Cu/Al	1–500 kcmil (2)	**TA700MA1**	**TA700MA1CWT**
800 std.	Aluminum	Cu/Al	3/0–400 kcmil (3)	**TA800MA2**	**TA800MA2CWT**
800	Aluminum	Cu/Al	500–750 kcmil (2)	**TA801MA**	**TA801MACWT**
Optional Copper and Cu/Al Pressure Type Terminals					
600	Copper	Cu	2/0–500 kcmil (2)	**T600MA1**	—
800	Copper	Cu	3/0–300 kcmil (3)	**T800MA1**	—

Accessories

Allowable Accessory Combinations

Different combinations of accessories can be supplied, depending on the types of accessories and the number of poles in the circuit breaker.

MD Frame Accessories

Description	Reference Page	Two-Pole ① Left	Two-Pole ① Right	Three-Pole Left	Three-Pole Center	Three-Pole Right
Internal Accessories (Only One Internal Accessory Per Pole)						
Alarm lockout (Make/Break)	**V4-T2-276**	■	■	■		■
Alarm lockout (2Make/2Break)	**V4-T2-276**	■	■	■		■
Auxiliary switch (1A, 1B)	**V4-T2-278**	■	■	■		■
Auxiliary switch (2A, 2B)	**V4-T2-278**	■	■	■		■
Auxiliary switch (3A, 3B)	**V4-T2-278**	■	■	■		■
Auxiliary switch (1A, 1B) and alarm switch combination	**V4-T2-280**	■	■	■		■
Auxiliary switch (2A, 2B) and alarm switch combination	**V4-T2-280**	■	■	■		■
Shunt trip—standard ②	**V4-T2-283**	■	■	■		■
Shunt trip—low energy ②	**V4-T2-285**	■	■	■		■
Undervoltage release mechanism ②	**V4-T2-291**	■	■	■		■
External Accessories						
Rear fed terminals	**V4-T2-310**	●	●	●	●	●
Base mounting hardware	**V4-T2-311**				●	
Terminal shields	**V4-T2-313**				●	
Interphase barriers	**V4-T2-313**				●	
Non-padlockable handle block	**V4-T2-314**				■	
Padlockable handle lock hasp	**V4-T2-315**	❑		❑		❑
Key interlock kit	**V4-T2-316**	❑		❑		❑
Sliding bar interlock—requires two breakers	**V4-T2-317**	●	●	●	●	●
Walking beam interlock—requires two breakers	**V4-T2-317**	●	●	●	●	●
Electrical (motor) operator	**V4-T2-318**	●	●	●	●	●
Plug-in adapters	**V4-T2-320**	●	●	●	●	●
Rear connecting studs	**V4-T2-321**	●	●	●	●	●
Panelboard connecting straps	**V4-T2-322**	●	●	●	●	●
Handle mechanisms	**V4-T2-432**	●	●	●	●	●
Handle extension	**V4-T2-447**	●	●	●	●	●
Solid-state (electronic) portable test kit	**V4-T2-324**	●	●	●	●	●
Modifications (Refer to Eaton)						
Special calibration	—	●	●	●	●	●
Moisture fungus treatment	**V4-T2-116**	●	●	●	●	●
Freeze-tested circuit breakers	—	●	●	●	●	●
Marine/naval application	—	●	●	●	●	●

Legend

■ Applicable in indicated pole position

❑ May be mounted on left or right pole—not both

● Accessory available/modification available

Notes

① Two-pole breaker supplied in three-pole frame. Current carrying parts omitted from center pole.

② Shunt trip and UVR cannot be mounted in right poles on MES trip units.

310+ Electronic Trip Unit Accessories

Description	Catalog Number
Electronic portable test kit	**MTST230V** ①
Trip unit tamper protection wire seal	**5108A03H01**
External neutral sensor	**LGFCT600** ②
Breaker-mount cause-of-trip indication	**TRIP-LED**
Breaker-mount ammeter module	**DIGIVIEW**
Remote-mount ammeter module	**DIGIVIEWR06** ③

Technical Data and Specifications

UL 489/CSA Interrupting Capacity Ratings ④

Circuit Breaker Type	Number of Poles	Interrupting Capacity (kA Symmetrical Amperes) Volts AC (50/60 Hz) 240	480	600	Volts DC ⑤⑥ 250
MDL, MDLB	2, 3	65	50	25	22
CMDL	2, 3	65	50	25	—
HMDL, HMDLB	2, 3	100	65	35	25
CHMDL	2, 3	100	65	35	—

IEC 947-2 Interrupting Capacity Ratings ④

Circuit Breaker Type	Number of Poles	Interrupting Capacity rms (kA Symmetrical Amperes) $I_{cu} \neq I_{cs}$ Volts AC (50/60 Hz) 240	415	690	Volts DC ⑤⑥ 250
MDL, MDLB	2, 3	65/65	50/50	20/10	20/10
CMDL	2, 3	65/65	50/50	20/10	—
HMDL, HMDLB	2, 3	100/100	70/50	25/13	20/10
CHMDL	2, 3	100/100	70/50	25/13	—

Notes

① MTST230V applies to 100–230 Vac.
② Included with all LD LSG and LSIG trip units and breakers.
③ Includes 6 ft cable for remote mounting; NEMA 3R rated.
④ Utilization Category A circuit breakers.
⑤ Two-pole or two poles of three-pole circuit breaker. Thermal-magnetic trip units only, MDL, HMDL breakers with electronic trip unit are not DC rated.
⑥ Time constant is 3 milliseconds minimum at 10 kA and 8 milliseconds at 22 kA.

310+ Specifications

Description	Specification
Trip Unit Type	Digitrip RMS 310+
Breaker Type	
Frame designation	MDL
Frames available	800 A
Continuous current range (A)	320–800 A
Ground fault pickup (A)	160–800 A
Interrupting capacities at 480 Vac (kAIC)	50, 65
100% rated	Yes
Protection	
Ordering options	LS, LSI, LSG, LSIG, ALSI, ALSIG
Arcflash Reduction Maintenance System (or Maintenance Mode)	Remote enabled on ALSI, ALSIG
Interchangeable trip unit	Yes
High load alarm (suffix B20) ①	Yes
Ground fault alarm with trip (suffix B21) ①	LSG, LSIG, ALSIG
Ground fault alarm, no trip (suffix B22) ①	LSG, LSIG, ALSIG
Zone selective interlocking (suffix ZG)	LSI, LSIG, ALSI, ALSIG
Cause of trip indication	Yes (via TRIP-LED or DIGIVIEW)
Thru-cover accessories	No

310+ Adjustability Specifications

Description		MDL Frame Specification
310+ settings		800 A
I_r = continuous current or long delay pickup (amperes) (All 310+)	I_r	
	A	320
	B	400
	C	450
	D	500
	E	600
	F	630
	G	700
	H (= I_n)	800
t_r = long delay time (seconds) (All 310+)	2	2
	4	4
	7	7
	10	10
	12	12
	15	15
	20	20
	24	24
I_{sd} (x I_r) = short delay pickup (All 310+)	Position 1	2x
	Position 2	3x
	Position 3	4x
	Position 4	5x
	Position 5	6x
	Position 6	7x
	Position 7	8x
	Position 8	8x
	Position 9	8x
t_{sd} = short delay time I^2t (milliseconds) (LS and LSG)	Fixed	67 @10x
t_{sd} = short delay time flat (milliseconds) (LSI, LSIG, ALSI, ALSIG)	Position 1	Inst
	Position 2	120
	Position 3	300
I_g (x I_n) = ground fault pickup (amperes) (310+ w/ ground fault)	Position 1	160
	Position 2	240
	Position 3	320
	Position 4	480
	Position 5	640
	Position 6	800
t_g = ground fault delay time (milliseconds) (LSG, LSIG, ALSIG)	Position 1	Inst
	Position 2	120
	Position 3	300
Independently adjustable Instantaneous (Ii) setting	②	
Maintenance Mode pickup (2.5 x I_n) (amperes) (310+ with Maintenance Mode—ALSI and ALSIG)	Fixed	2000

Notes

① B2x suffixes cannot be combined with B2x suffixes.

② Not available for MDL. Independently adjustable Ii setting available in LG, NG, and RG ALSI and ALSIG trip units.

Dimensions and Weights

Dimensions in Inches (mm)

MD Frame

Number of Poles	Width	Height	Depth
2, 3	8.25 (209.6)	16.00 (406.4)	4.06 (103.1)

MDL-Frame, Two- and Three-Pole

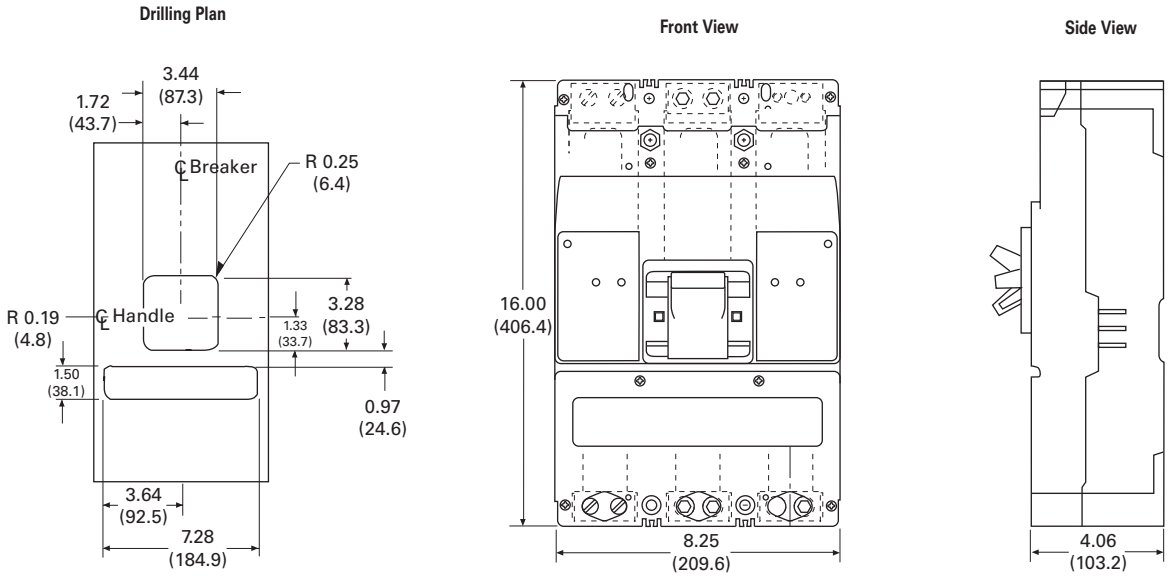

Approximate Shipping Weight, Lbs (kg)

MD Frame

	Complete Breaker		Frame Only		Trip Unit ①	
Breaker Type	Two-Pole	Three-Pole	Two-Pole	Three-Pole	Two-Pole	Three-Pole
MDL, HMDL (T/M T.U.)	26.5 (12.0)	29.0 (13.2)	24.5 (11.1)	26.0 (11.8)	2.5 (1.1)	3.0 (1.4)
MDL, HMDL (Elec. T.U.)	—	30.0 (13.6)	—	26.0 (11.8)	—	4.0 (1.8)

Note

① Thermal-magnetic only.

Typical N-Frame Breaker

Contents

Description	*Page*
Product Overview	**V4-T2-116**
Standards and Certifications	**V4-T2-117**
Quick Reference	**V4-T2-118**
G-Frame (15–100 Amperes)	**V4-T2-121**
F-Frame (10–225 Amperes)	**V4-T2-135**
J-Frame (70–250 Amperes)	**V4-T2-153**
K-Frame (70–400 Amperes)	**V4-T2-161**
L-Frame (125–600 Amperes)	**V4-T2-185**
M-Frame (300–800 Amperes)	**V4-T2-211**
N-Frame (400–1200 Amperes)	
Catalog Number Selection	**V4-T2-223**
Product Selection	**V4-T2-224**
Accessories	**V4-T2-232**
Technical Data and Specifications	**V4-T2-233**
Dimensions and Weights	**V4-T2-236**
R-Frame (800–2500 Amperes)	**V4-T2-237**
Motor Circuit Protectors (MCP)	**V4-T2-256**
Motor Protection Circuit Breakers (MPCB)	**V4-T2-267**
Type ELC Current Limiter Attachment (Size 0–4)	**V4-T2-269**
Current Limiting Circuit Breaker Module	**V4-T2-270**
Internal Accessories	**V4-T2-273**
External Accessories	**V4-T2-304**

N-Frame (400–1200 Amperes)

Product Description

- All Eaton N-Frame circuit breakers are suitable for reverse feed use
- All N-Frame circuit breakers are HACR rated

Catalog Number Selection

This information is presented only as an aid to understanding catalog numbers.
It is not to be used to build catalog numbers for circuit breakers or trip units.

Circuit Breaker/Frame

ND 3 12 T3 2 W

Circuit Breaker/ Frame Type
ND
HND
NDC
NDU
CND
CHND
CNDC

Number of Poles
2 = Two-pole
3 = Three-pole
4 = Four-pole

Circuit Breaker/Frame Ampere Rating
800 = 800 amperes
12 = 1200 amperes

Trip Model
T3 = Model 310
T5 = Model 550
T7 = Model 750
T10 = Model 1050

Trip Type
2 = LSI
3 = LS
5 = LSG
6 = LSIG
7 = LSIA

Suffix		
E	=	100% R.P. protected (four-pole)
EH	=	50% R.P. protected (four-pole)
K	=	High magnetic molded case switch
W	=	Without terminals
X	=	Load only terminals
Y	=	Line only terminals

Product Selection

Digitrip OPTIM Electronic Circuit Breakers with Interchangeable Rating Plugs

Order as individual components: breaker frame (which includes trip unit), rating plug, terminals.

Digitrip OPTIM 550 Electronic Circuit Breakers with Interchangeable Rating Plugs

	Circuit Breaker Frame Only L – Adjustable Long Delay Pickup (I_r) with Adjustable Long Delay Time (I^2t or I^4t Response) ① S – Adjustable Short Delay Pickup with Adjustable Short Delay Time (I^2t or Flat Response) I – Adjustable Instantaneous Pickup G – Adjustable Ground Fault Pickup with Adjustable Ground Fault Time Delay (I^2t or Flat Response) A – Adjustable Ground Fault Alarm with Adjustable Ground Fault Time Delay (I^2t or Flat Response)			Digitrip OPTIM Rating Plug Only	
	OPTIM 550 ②				
	LSI	LSIG	LSIA		Fixed Rating Plug
Maximum Continuous Ampere Rating at 40 °C	Catalog Number	Catalog Number	Catalog Number	Ampere Rating	Catalog Number
Three-Pole Standard Interrupting Capacity 600 Vac Rated 50 kAIC at 480 Vac					
800	**ND3800T52W**	**ND3800T56W**	**ND3800T57W**	400	**ORPN80A400**
				450	**ORPN80A450**
				500	**ORPN80A500**
				550	**ORPN80A550**
				600	**ORPN80A600**
				700	**ORPN80A700**
				800	**ORPN80A800**
1200	**ND312T52W**	**ND312T56W**	**ND312T57W**	600	**ORPN12A600**
				700	**ORPN12A700**
				800	**ORPN12A800**
				1000	**ORPN12A100**
				1200	**ORPN12A120**
Three-Pole High Interrupting Capacity 600 Vac Rated 65 kAIC at 480 Vac					
800	**HND3800T52W**	**HND3800T56W**	**HND3800T57W**	400	**ORPN80A400**
				450	**ORPN80A450**
				500	**ORPN80A500**
				550	**ORPN80A550**
				600	**ORPN80A600**
				700	**ORPN80A700**
				800	**ORPN80A800**
1200	**HND312T52W**	**HND312T56W**	**HND312T57W**	600	**ORPN12A600**
				700	**ORPN12A700**
				800	**ORPN12A800**
				1000	**ORPN12A100**
				1200	**ORPN12A120**

Notes

① Long delay I^4t response selection limits short delay time to flat response.

② Zone interlocking, PowerNet, or both features can be added at the factory by adding suffixes **ZG**, **PN** or **ZGP** respectively to above catalog number.

Digitrip OPTIM 550 Electronic Circuit Breakers with Interchangeable Rating Plugs, continued

Circuit Breaker Frame Only

L – Adjustable Long Delay Pickup (I_r) with Adjustable Long Delay Time (I^2t or I^4t Response) ①
S – Adjustable Short Delay Pickup with Adjustable Short Delay Time (I^2t or Flat Response)
I – Adjustable Instantaneous Pickup
G – Adjustable Ground Fault Pickup with Adjustable Ground Fault Time Delay (I^2t or Flat Response)
A – Adjustable Ground Fault Alarm with Adjustable Ground Fault Time Delay (I^2t or Flat Response)

Digitrip OPTIM Rating Plug Only

Maximum Continuous Ampere Rating at 40 °C	OPTIM 550 ② LSI Catalog Number	LSIG Catalog Number	LSIA Catalog Number	Ampere Rating	Fixed Rating Plug Catalog Number
Three-Pole Ultra High Interrupting Capacity 600 Vac Rated 100 kAIC at 480 Vac					
800	**NDC3800T52W**	**NDC3800T56W**	**NDC3800T57W**	400	**ORPN80A400**
				450	**ORPN80A450**
				500	**ORPN80A500**
				550	**ORPN80A550**
				600	**ORPN80A600**
				700	**ORPN80A700**
				800	**ORPN80A800**
1200	**NDC312T52W**	**NDC312T56W**	**NDC312T57W**	600	**ORPN12A600**
				700	**ORPN12A700**
				800	**ORPN12A800**
				1000	**ORPN12A100**
				1200	**ORPN12A120**

Notes

① Long delay I^4t response selection limits short delay time to flat response.

② Zone interlocking, PowerNet, or both features can be added at the factory by adding suffixes **ZG**, **PN** or **ZGP** respectively to above catalog number.

Digitrip OPTIM 1050 Electronic Circuit Breakers with Interchangeable Rating Plugs

Maximum Continuous Ampere Rating at 40 °C	Circuit Breaker Frame Only L– Adjustable Long Delay Pickup (I_r) with Adjustable Long Delay Time (I^2t or I^4t Response) ① S– Adjustable Short Delay Pickup with Adjustable Short Delay Time (I^2t or Flat Response) I– Adjustable Instantaneous Pickup G– Adjustable Ground Fault Pickup with Adjustable Ground Fault Time Delay (I^2t or Flat Response) A– Adjustable Ground Fault Alarm with Adjustable Ground Fault Time Delay (I^2t or Flat Response) OPTIM 1050 ②③ LSIG Catalog Number	LSIA Catalog Number	Digitrip OPTIM Rating Plug Only Ampere Rating	Fixed Rating Plug Catalog Number
Three-Pole Standard Interrupting Capacity 600 Vac Rated 50 kAIC at 480 Vac				
800	**ND3800T106W**	**ND3800T107W**	400	**ORPN80A400**
			450	**ORPN80A450**
			500	**ORPN80A500**
			550	**ORPN80A550**
			600	**ORPN80A600**
			700	**ORPN80A700**
			800	**ORPN80A800**
1200	**ND312T106W**	**ND312T107W**	600	**ORPN12A600**
			700	**ORPN12A700**
			800	**ORPN12A800**
			1000	**ORPN12A100**
			1200	**ORPN12A120**
Three-Pole High Interrupting Capacity 600 Vac Rated 65 kAIC at 480 Vac				
800	**HND3800T106W**	**HND3800T107W**	400	**ORPN80A400**
			450	**ORPN80A450**
			500	**ORPN80A500**
			550	**ORPN80A550**
			600	**ORPN80A600**
			700	**ORPN80A700**
			800	**ORPN80A800**
1200	**HND312T106W**	**HND312T107W**	600	**ORPN12A600**
			700	**ORPN12A700**
			800	**ORPN12A800**
			1000	**ORPN12A100**
			1200	**ORPN12A120**
Three-Pole Ultra High Interrupting Capacity 600 Vac Rated 100 kAIC at 480 Vac				
800	**NDC3800T106W**	**NDC3800T107W**	400	**ORPN80A400**
			450	**ORPN80A450**
			500	**ORPN80A500**
			550	**ORPN80A550**
			600	**ORPN80A600**
			700	**ORPN80A700**
			800	**ORPN80A800**
1200	**NDC312T106W**	**NDC312T107W**	600	**ORPN12A600**
			700	**ORPN12A700**
			800	**ORPN12A800**
			1000	**ORPN12A100**
			1200	**ORPN12A120**

Notes

① Long delay I^4t response selection limits short delay time to flat response.
② One Form C auxiliary switch and one Form C bell (trip) alarm switch supplied with breaker as standard.
③ Factory sealed.

100% Rated Digitrip OPTIM Circuit Breakers with Interchangeable Rating Plugs

Order as individual components: breaker frame (which includes trip unit), rating plug, terminals.

100% Rated Digitrip OPTIM 550 Circuit Breakers with Interchangeable Rating Plugs

	Circuit Breaker Frame Only L – Adjustable Long Delay Pickup (I_r) with Adjustable Long Delay Time (I^2t or I^4t Response) ① S – Adjustable Short Delay Pickup with Adjustable Short Delay Time (I^2t or Flat Response) I – Adjustable Instantaneous Pickup G – Adjustable Ground Fault Pickup with Adjustable Ground Fault Time Delay (I^2t or Flat Response) A – Adjustable Ground Fault Alarm with Adjustable Ground Fault Time Delay (I^2t or Flat Response)			Digitrip OPTIM Rating Plug Only	
	OPTIM 550 ②				
Maximum Continuous Ampere Rating at 40 °C	LSI Catalog Number	LSIG Catalog Number	LSIA Catalog Number	Ampere Rating	Fixed Rating Plug Catalog Number
Three-Pole Standard Interrupting Capacity 600 Vac Rated 50 kAIC at 480 Vac					
800	**CND3800T52W**	**CND3800T56W**	**CND3800T57W**	400	**ORPN80A400**
				450	**ORPN80A450**
				500	**ORPN80A500**
				550	**ORPN80A550**
				600	**ORPN80A600**
				700	**ORPN80A700**
				800	**ORPN80A800**
1200 ③	**CND312T52W**	**CND312T56W**	**CND312T57W**	600	**ORPN12A600**
				700	**ORPN12A700**
				800	**ORPN12A800**
				1000	**ORPN12A100**
				1200	**ORPN12A120**
Three-Pole High Interrupting Capacity 600 Vac Rated 65 kAIC at 480 Vac					
800	**CHND3800T52W**	**CHND3800T56W**	**CHND3800T57W**	400	**ORPN80A400**
				450	**ORPN80A450**
				500	**ORPN80A500**
				550	**ORPN80A550**
				600	**ORPN80A600**
				700	**ORPN80A700**
				800	**ORPN80A800**
1200 ③	**CHND312T52W**	**CHND312T56W**	**CHND312T57W**	600	**ORPN12A600**
				700	**ORPN12A700**
				800	**ORPN12A800**
				1000	**ORPN12A100**
				1200	**ORPN12A120**

Notes

① Long delay I^4t response selection limits short delay time to flat response.

② Zone interlocking, PowerNet, or both features can be added at the factory by adding suffixes **ZG**, **PN** or **ZGP** respectively to above catalog number.

③ Includes conductor extension kit, which increases breaker length 3.75 on each end. Terminal ordered separate.

100% Rated Digitrip OPTIM 550 Circuit Breakers with Interchangeable Rating Plugs, continued

Maximum Continuous Ampere Rating at 40 °C	Circuit Breaker Frame Only L – Adjustable Long Delay Pickup (I_r) with Adjustable Long Delay Time (I^2t or I^4t Response) ① S – Adjustable Short Delay Pickup with Adjustable Short Delay Time (I^2t or Flat Response) I – Adjustable Instantaneous Pickup G – Adjustable Ground Fault Pickup with Adjustable Ground Fault Time Delay (I^2t or Flat Response) A – Adjustable Ground Fault Alarm with Adjustable Ground Fault Time Delay (I^2t or Flat Response) OPTIM 550 ②			Digitrip OPTIM Rating Plug Only	
	LSI	LSIG	LSIA		Fixed Rating Plug
	Catalog Number	Catalog Number	Catalog Number	Ampere Rating	Catalog Number
Three-Pole Ultra High Interrupting Capacity 600 Vac Rated 100 kAIC at 480 Vac					
800	**CNDC3800T52W**	**CNDC3800T56W**	**CNDC3800T57W**	400	**ORPN80A400**
				450	**ORPN80A450**
				500	**ORPN80A500**
				550	**ORPN80A550**
				600	**ORPN80A600**
				700	**ORPN80A700**
				800	**ORPN80A800**
1200 ③	**CNDC312T52W**	**CNDC312T56W**	**CNDC312T57W**	600	**ORPN12A600**
				700	**ORPN12A700**
				800	**ORPN12A800**
				1000	**ORPN12A100**
				1200	**ORPN12A120**

Notes

① Long delay I^4t response selection limits short delay time to flat response.

② Zone interlocking, PowerNet, or both features can be added at the factory by adding suffixes **ZG**, **PN** or **ZGP** respectively to above catalog number.

③ Includes conductor extension kit, which increases breaker length 3.75 on each end. Terminal ordered separate.

100% Rated Digitrip OPTIM 1050 Circuit Breakers with Interchangeable Rating Plugs

Circuit Breaker Frame Only

L – Adjustable Long Delay Pickup (I_r) with Adjustable Long Delay Time (I^2t or I^4t Response) ①
S – Adjustable Short Delay Pickup with Adjustable Short Delay Time (I^2t or Flat Response)
I – Adjustable Instantaneous Pickup
G – Adjustable Ground Fault Pickup with Adjustable Ground Fault Time Delay (I^2t or Flat Response)
A – Adjustable Ground Fault Alarm with Adjustable Ground Fault Time Delay (I^2t or Flat Response)

Digitrip OPTIM Rating Plug Only

Maximum Continuous Ampere Rating at 40 °C	OPTIM 1050 ②③ LSIG Catalog Number	LSIA Catalog Number	Ampere Rating	Fixed Rating Plug Catalog Number
Three-Pole Standard Interrupting Capacity 600 Vac Rated 50 kAIC at 480 Vac				
800	**CND3800T106W**	**CND3800T107W**	400	**ORPN80A400**
			450	**ORPN80A450**
			500	**ORPN80A500**
			550	**ORPN80A550**
			600	**ORPN80A600**
			700	**ORPN80A700**
			800	**ORPN80A800**
1200	**CND312T106W**	**CND312T107W**	600	**ORPN12A600**
			700	**ORPN12A700**
			800	**ORPN12A800**
			1000	**ORPN12A100**
			1200	**ORPN12A120**
Three-Pole High Interrupting Capacity 600 Vac Rated 65 kAIC at 480 Vac				
800	**CHND3800T106W**	**CHND3800T107W**	400	**ORPN80A400**
			450	**ORPN80A450**
			550	**ORPN80A550**
			600	**ORPN80A600**
			700	**ORPN80A700**
			800	**ORPN80A800**
1200	**CHND312T106W**	**CHND312T107W**	600	**ORPN12A600**
			700	**ORPN12A700**
			800	**ORPN12A800**
			1000	**ORPN12A100**
			1200	**ORPN12A120**

Notes

① Long delay I^4t response selection limits short delay time to flat response.
② One Form C auxiliary switch one Form C bell (trip) alarm switch supplied with breaker as standard.
③ Factory sealed.

100% Rated Digitrip OPTIM 1050 Circuit Breakers with Interchangeable Rating Plugs, continued

Maximum Continuous Ampere Rating at 40 °C	Circuit Breaker Frame Only L – Adjustable Long Delay Pickup (I_r) with Adjustable Long Delay Time (I^2t or I^4t Response) ① S – Adjustable Short Delay Pickup with Adjustable Short Delay Time (I^2t or Flat Response) I – Adjustable Instantaneous Pickup G – Adjustable Ground Fault Pickup with Adjustable Ground Fault Time Delay (I^2t or Flat Response) A – Adjustable Ground Fault Alarm with Adjustable Ground Fault Time Delay (I^2t or Flat Response) OPTIM 1050 ②③ LSIG Catalog Number	LSIA Catalog Number	Digitrip OPTIM Rating Plug Only Ampere Rating	Fixed Rating Plug Catalog Number
Three-Pole Ultra High Interrupting Capacity 600 Vac Rated 100 kAIC at 480 Vac				
800	**CNDC3800T106W**	**CNDC3800T107W**	400	**ORPN80A400**
			450	**ORPN80A450**
			500	**ORPN80A500**
			550	**ORPN80A550**
			600	**ORPN80A600**
			700	**ORPN80A700**
			800	**ORPN80A800**
1200	**CNDC312T106W** ④	**CNDC312T107W**	600	**ORPN12A600**
			700	**ORPN12A700**
			800	**ORPN12A800**
			1000	**ORPN12A100**
			1200	**ORPN12A120**

Type ND Molded Case Switches

Type ND High Instantaneous (K)

Continuous Ampere Rating at 40 °C	Three-Pole Catalog Number	Four-Pole ⑤ Catalog Number
800	**ND3800WK**	**ND4800WK**
	HND3800WK	**HND4800WK**
1200	**ND312WK**	**ND412WK**
	HND312WK	**HND412WK**

Notes

① Long delay I^4t response selection limits short delay time to flat response.
② One Form C auxiliary switch one Form C bell (trip) alarm switch supplied with breaker as standard.
③ Factory sealed.
④ Includes conductor extension kit, which increases breaker length 3.75 on each end. Terminal ordered separate.
⑤ Neutral is in right pole.

Molded case switch will trip above 14,000 amperes.

For UL listed, series tested molded case switch application data, refer to Eaton.

Accessories Selection Guide and Ordering Information

Line and Load Terminals—Ordering Information

N-Frame circuit breakers use Cu/Al terminals as standard. When optional copper or Cu/Al terminals are required, order by catalog number. Specify if factory installation is required.

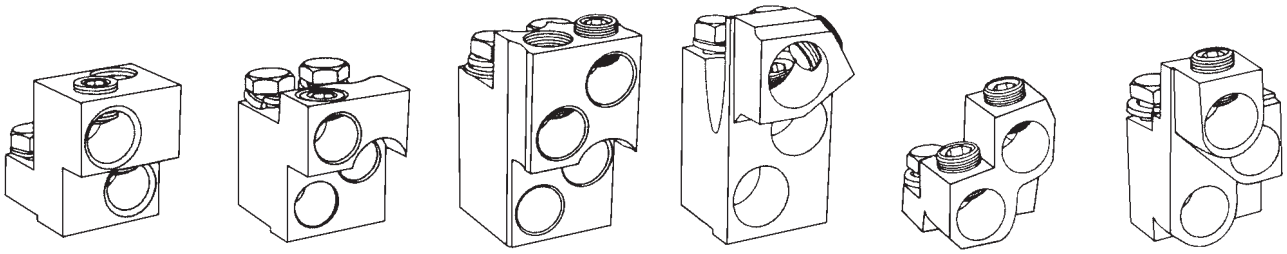

TA700NB1	TA1000NB1	TA1200NB1	TA1201NB1	T700NB1	T1000NB1

Line and Load Terminals

Maximum Breaker Amperes	Terminal Body Material	Wire Type	AWG Wire Range/ No. Conductors	Metric Wire Range mm^2	Catalog Number
Standard Cu/Al Pressure Terminals					
700	Aluminum	Cu/Al	1–500 kcmil (2)	50–240	**TA700NB1**
1000	Aluminum	Cu/Al	3/0–400 kcmil (3)	95–185	**TA1000NB1** ①
1200	Aluminum	Cu/Al	4/0–500 kcmil (4)	120–240	**TA1200NB1** ①
1200	Aluminum	Cu/Al	500–750 kcmil (3)	300–400	**TA1201NB1** ②
Optional Copper and Cu/Al Pressure Type Terminals					
700	Copper	Cu	2/0–500 kcmil (2)	70–240	**T700NB1**
1000	Copper	Cu	3/0–500 kcmil (3)	95–240	**T1000NB1**
1200	Copper	Cu	3/0–400 kcmil (4)	95–185	**T1200NB3**

Notes

① Terminal rating is AL9CU.
② Terminal rating is AL7CU.

Accessories

Allowable Accessory Combinations

Different combinations of accessories can be supplied, depending on the types of accessories and the number of poles in the circuit breaker.

ND Frame Accessories

Description	Reference Page	Three-Pole Left	Three-Pole Center	Three-Pole Right	Four-Pole Left	Four-Pole Center	Four-Pole Right	Four-Pole Neutral
Internal Accessories (Only One Internal Accessory Per Pole) ①								
Alarm lockout (Make/Break)	**V4-T2-276**	■		■	■		■	
Alarm lockout (2Make/2Break)	**V4-T2-276**	■		■	■		■	
Auxiliary switch (1A, 1B)	**V4-T2-278**	■		■	■		■	
Auxiliary switch (2A, 2B)	**V4-T2-278**	■		■	■		■	
Auxiliary switch (3A, 3B)	**V4-T2-278**	■		■	■		■	
Auxiliary switch (1A, 1B) and alarm switch combination	**V4-T2-280**	■		■	■		■	
Auxiliary switch (2A, 2B) and alarm switch combination	**V4-T2-280**	■		■	■		■	
Shunt trip—standard	**V4-T2-284**	■			■			
Shunt trip—low energy	**V4-T2-285**	■			■			
Undervoltage release mechanism	**V4-T2-292**	■			■			
Eaton PowerNet communications kit (OPTIM 550)	**V4-T2-293**			■				
External Accessories								
Base mounting hardware	**V4-T2-311**	●	●	●	●	●	●	●
Interphase barriers	**V4-T2-313**	●	●	●	●	●	●	●
Terminal shield	**V4-T2-313**	■	■	■				
Non-padlockable handle block	**V4-T2-314**		■			■		
Padlockable handle lock hasp	**V4-T2-315**	❑		❑	❑		❑	
Key interlock kit	**V4-T2-316**	❑		❑	❑		❑	
Sliding bar interlock—requires two breakers	**V4-T2-317**	●	●	●				
Walking beam interlock—requires two breakers	**V4-T2-317**	●	●	●	●	●	●	●
Electrical (motor) operator	**V4-T2-319**	●	●	●	●	●	●	●
Plug-in adapters	**V4-T2-320**	●	●	●	●	●	●	●
Rear connecting studs	**V4-T2-321**	●	●	●	●	●	●	●
Panelboard connecting straps	**V4-T2-322**	●	●	●	●	●	●	●
Handle mechanisms	**V4-T2-432**	●	●	●	●	●	●	●
Handle extension	**V4-T2-447**	●	●	●	●	●	●	●
Solid-state (electronic) portable test kit	**V4-T2-325**	●	●	●	●	●	●	●
OPTIM System Components Three Poles								
Ground fault alarm unit	**V4-T2-324**							
Potential transformer module	**V4-T2-324**							
Breaker interface module (BIM)	**V4-T2-325**							
Digitrip OPTIMizer	**V4-T2-325**							
Auxiliary power module	**V4-T2-325**							
Modifications (Refer to Eaton)								
Special calibration	—	●	●	●	●	●	●	●
Moisture fungus treatment	**V4-T2-116**	●	●	●	●	●	●	●
Freeze-tested circuit breakers	—	●	●	●	●	●	●	●
Marine/naval application	—	●	●	●	●	●	●	●

Legend

■ Applicable in indicated pole position
❑ May be mounted on left or right pole—not both
● Accessory available/modification available

Note

① OPTIM 550 and 1050 are factory sealed and do not have the right pole available for accessories.

Technical Data and Specifications

UL 489 Interrupting Capacity Ratings ①

Circuit Breaker Type	Number of Poles	Interrupting Capacity (kA Symmetrical Amperes) Volts AC (50/60 Hz) 240	277	480	600
ND	2, 3, 4	65	—	50	25
CND ②	2, 3, 4	65	—	50	25
HND	2, 3, 4	100	—	65	35
CHND ②	2, 3, 4	100	—	65	35
NDC	2, 3, 4	200	—	100	65
CNDC ②	2, 3, 4	200	—	100	65
NDU ③	3	300 ④	—	150	75 ⑤

IEC 947-2 Interrupting Capacity Ratings ①

Circuit Breaker Type	Number of Poles	Interrupting Capacity (kA Symmetrical Amperes) Volts AC (50/60 Hz) 240	415	690
ND				
I_{cu}	2, 3, 4	85	50	20
I_{cs}	2, 3, 4	85	50	10
CND ②				
I_{cu}	2, 3, 4	85	50	20
I_{cs}	2, 3, 4	85	50	10
HND				
I_{cu}	2, 3, 4	100	70	25
I_{cs}	2, 3, 4	100	50	13
CHND ②				
I_{cu}	2, 3, 4	100	70	25
I_{cs}	2, 3, 4	100	50	13
NDC				
I_{cu}	2, 3, 4	200	100	35
I_{cs}	2, 3, 4	100	50	18
CNDC ②				
I_{cu}	2, 3, 4	200	100	35
I_{cs}	2, 3, 4	100	50	18

Notes

① Utilization Category A circuit breakers.
② 100% rated breakers.
③ 800 amperes maximum rating.
④ Successfully tested at 300 kAIC, although UL recognizes maximum of 200 kAIC at 240 Vac.
⑤ Successfully tested at 75 kAIC, although UL recognizes maximum of 65 kAIC at 600 Vac.

N-Frame Digitrip

Trip Unit Type	Digitrip OPTIM 550	Digitrip OPTIM 1050
rms sensing	Yes	Yes
Breaker Type		
Frame	N	N
Ampere range	400–1200 A	400–1200 A
Interrupting rating at 480 volts	50, 65, 100 (kA)	50, 65, 100 (kA)
Protection		
Ordering options	LSI, LSIG, LSI(A)	LSI(A), LISG
Fixed rated plug (I_n)	Yes	Yes
Overtemperature trip	Yes	Yes
Long Delay Protection (L)		
Adjustable rating plug (I_n)	No	No
Long delay pickup	0.4–1.0 x (I_n)	0.4–1.0 x (I_n)
Long delay time I^2t	2–24 seconds	2–24 seconds
Long delay time I^4t	1–5 seconds	1–5 seconds
Long delay thermal memory	Yes	Yes
High load alarm	No	0.5–1.0 x I_r
Short Delay Protection (S)		
Short delay pickup	150–800% x (I_r)	150–800% x (I_r)
Short delay time I^2t	100–500 ms	100–500 ms
Short delay time flat	100–500 ms	100–500 ms
Short delay time zone selective interlocking	Yes	Yes
Instantaneous Protection (I)		
Instantaneous pickup	200–800% x (I_n)	200–800% x (I_n)
Discriminator	Yes	Yes
Instantaneous override	Yes	Yes
Ground Fault Protection (G)		
Ground fault alarm	20–100% x (I_s)	20–100% x (I_s)
Ground fault pickup	20–100% x (I_s)	20–100% x (I_s)
Ground fault delay I^2t	100–500 ms	100–500 ms
Ground fault delay flat	100–500 ms	100–500 ms
Ground fault zone selective interlocking	Yes ①	Yes
Ground fault thermal memory	Yes	Yes
System Diagnostics		
Status LEDs	Yes	Yes
Cause of trip LEDs	Yes	Yes
Magnitude of trip information	Yes	Yes
Remote signal contact—ground alarm	Yes ①	Yes
Local auxiliary and bell alarm contact	Optional	Included

Legend

BIM = Breaker Interface Module
(A) = GF Alarm
I_s = Sensor Rating
I_n = Rating Plug
I_r = Long Delay Pickup Setting

Note

① Zone interlock kit.

N-Frame Digitrip, continued

Trip Unit Type	Digitrip OPTIM 550	Digitrip OPTIM 1050
System Monitoring		
Digital display	Yes ①	Yes ①
Current	Yes	Yes
Power and energy	No	Yes
Power quality—harmonics	No	Yes
Power factor	No	Yes
Communications		
Eaton PowerNet	No ②	Yes
Testing		
Testing method	OPTIMizer, BIM, PowerNet	OPTIMizer, BIM, PowerNet

Legend

BIM = Breaker Interface Module
(A) = GF Alarm
I_s = Sensor Rating
I_n = Rating Plug
I_r = Long Delay Pickup Setting

Notes

① By OPTIMizer/BIM.
② Eaton's PowerNet kit.

Dimensions and Weights

Approximate Dimensions in Inches (mm)

ND Frame

Number of Poles	Width	Height	Depth
2, 3	8.25 (209.6)	16.00 (406.4)	5.50 (139.7)
4	11.13 (282.6)	16.00 (406.4)	5.50 (139.7)

ND-Frame, Two- and Three-Pole

Front Cover Cutout

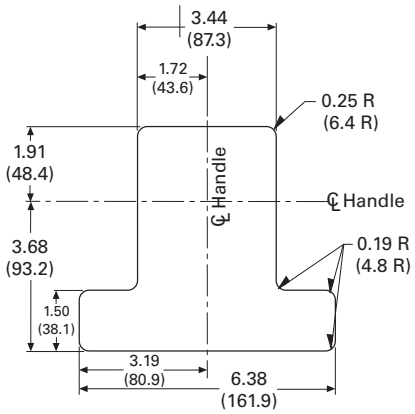

Front View

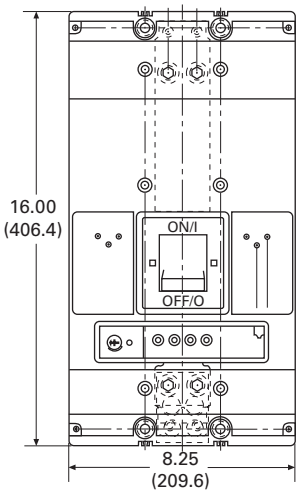

Side View

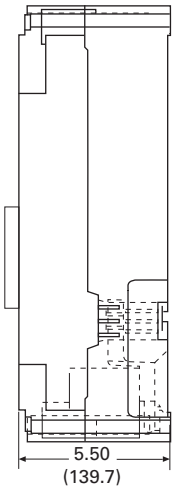

Approximate Shipping Weight in Lbs (kg)

ND Frame

Breaker Type	Complete Breaker Two-Pole	Three-Pole	Four-Pole
ND, HND, NDC, NDU	37 (16.8)	45 (20.4)	58 (26.3)

Typical R-Frame Breaker

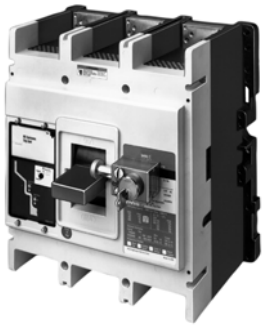

Contents

Description	*Page*
Product Overview	**V4-T2-116**
Standards and Certifications	**V4-T2-117**
Quick Reference	**V4-T2-118**
G-Frame (15–100 Amperes)	**V4-T2-121**
F-Frame (10–225 Amperes)	**V4-T2-135**
J-Frame (70–250 Amperes)	**V4-T2-153**
K-Frame (70–400 Amperes)	**V4-T2-161**
L-Frame (125–600 Amperes)	**V4-T2-185**
M-Frame (300–800 Amperes)	**V4-T2-211**
N-Frame (400–1200 Amperes)	**V4-T2-222**
R-Frame (800–2500 Amperes)	
Catalog Number Selection	**V4-T2-238**
Product Selection	**V4-T2-239**
Accessories	**V4-T2-251**
Technical Data and Specifications	**V4-T2-252**
Dimensions and Weights	**V4-T2-255**
Motor Circuit Protectors (MCP)	**V4-T2-256**
Motor Protection Circuit Breakers (MPCB)	**V4-T2-267**
Type ELC Current Limiter Attachment (Size 0–4)	**V4-T2-269**
Current Limiting Circuit Breaker Module	**V4-T2-270**
Internal Accessories	**V4-T2-273**
External Accessories	**V4-T2-304**

R-Frame (800–2500 Amperes)

Product Description

- Eaton R-Frame circuit breakers are available as frame (which includes trip unit), rating plug and terminals
- All R-Frame circuit breakers are suitable for reverse feed use

Catalog Number Selection

This information is presented only as an aid to understanding catalog numbers. It is not to be used to build catalog numbers for circuit breakers or trip units.

Circuit Breaker/Frame

RD 3 16 T53 W

Circuit Breaker/ Frame Type
RD
RDC
CRD ②
CRDC ②

Number of Poles
3 = Three-pole
4 = Four-pole

Circuit Breaker/Frame Ampere Rating
16 = 1600 amperes
20 = 2000 amperes
25 = 2500 amperes

Trip Type ①	
T53	= Digitrip RMS 510 LS
T65	= Digitrip RMS 610 LSG
T86	= Digitrip RMS 810 LSIG
T96	= Digitrip RMS 910 LSIG
T106	= Digitrip OPTIM 1050 LSIG
T107	= Digitrip OPTIM 1050 LSIA

Suffix
W = Without terminals
P = 100% protected neutral pole
R = Ground fault remote (310 only)
K = Molded case switch

Notes

① For complete list of available trip types, refer to **Pages V4-T2-239** to **V4-T2-248**.

② No four-pole for CRD and CRDC.

Product Selection

Digitrip RMS 510 Electronic Circuit Breakers with Interchangeable Rating Plugs

Order as individual components: breaker frame (which includes trip unit) and rating plug.

Digitrip RMS 510 Electronic Circuit Breakers with Interchangeable Rating Plugs

Maximum Continuous Ampere Rating at 40 °C	Circuit Breaker Frame Only L – Adjustable Long Delay Pickup (I_r) with Adjustable Long Delay Time S – Adjustable Short Delay Pickup with Adjustable Short Delay Time (I^2t or Flat Response) I – Adjustable Instantaneous Pickup G – Adjustable Ground Fault Pickup with Adjustable Ground Fault Time Delay (I^2t or Flat Response) LI Catalog Number	LS	LSI	LIG	LSG	LSIG	Digitrip Rating Plug Only Rated Current (I_n)	Fixed Rating Plug Catalog Number
Three-Pole Standard Interrupting Capacity 600 Vac Rated 65 kAIC at 480 Vac								
1600	**RD316T51W**	**RD316T53W**	**RD316T52W**	**RD316T54W**	**RD316T55W**	**RD316T56W**	800	**RP6R16A080**
							1000	**RP6R16A100**
							1200	**RP6R16A120**
							1600	**RP6R16A160**
2000	**RD320T51W**	**RD320T53W**	**RD320T52W**	**RD320T54W**	**RD320T55W**	**RD320T56W**	1000	**RP6R20A100**
							1200	**RP6R20A120**
							1600	**RP6R20A160**
							2000	**RP6R20A200**
2500	**RD325T51W**	**RD325T53W**	**RD325T52W**	**RD325T54W**	**RD325T55W**	**RD325T56W**	1600	**RP6R25A160**
							2000	**RP6R25A200**
							2500	**RP6R25A250**
Three-Pole High Interrupting Capacity 600 Vac Rated 100 kAIC at 480 Vac								
1600	**RDC316T51W**	**RDC316T53W**	**RDC316T52W**	**RDC316T54W**	**RDC316T55W**	**RDC316T56W**	800	**RP6R16A080**
							1000	**RP6R16A100**
							1200	**RP6R16A120**
							1600	**RP6R16A160**
2000	**RDC320T51W**	**RDC320T53W**	**RDC320T52W**	**RDC320T54W**	**RDC320T55W**	**RDC320T56W**	1000	**RP6R20A100**
							1200	**RP6R20A120**
							1600	**RP6R20A160**
							2000	**RP6R20A200**
2500	**RDC325T51W**	**RDC325T53W**	**RDC325T52W**	**RDC325T54W**	**RDC325T55W**	**RDC325T56W**	1600	**RP6R25A160**
							2000	**RP6R25A200**
							2500	**RP6R25A250**

100% Rated Digitrip RMS 510 Circuit Breakers

The NEC allows the breaker to be rated at 100% of its frame size in an assembly, provided that 90 °C wire is applied at 75 °C ampacity. Order as individual components: breaker frame (which includes trip unit) and rating plug.

100% Rated Digitrip RMS 510 Circuit Breakers

Maximum Continuous Ampere Rating at 40 °C	Circuit Breaker Frame Only L – Adjustable Long Delay Pickup (I_r) with Adjustable Long Delay Time S – Adjustable Short Delay Pickup with Adjustable Short Delay Time (I^2t or Flat Response) I – Adjustable Instantaneous Pickup G – Adjustable Ground Fault Pickup with Adjustable Ground Fault Time Delay (I^2t or Flat Response) LI Catalog Number	LS	LSI	LIG	LSG	LSIG	Digitrip Rating Plug Only Rated Current (I_n)	Fixed Rating Plug Catalog Number
Three-Pole Standard Interrupting Capacity 600 Vac Rated 65 kAIC at 480 Vac								
1600	**CRD316T51W**	**CRD316T53W**	**CRD316T52W**	**CRD316T54W**	**CRD316T55W**	**CRD316T56W**	800	**RP6R16A080**
							1000	**RP6R16A100**
							1200	**RP6R16A120**
							1600	**RP6R16A160**
2000 ①	**CRD320T51W**	**CRD320T53W**	**CRD320T52W**	**CRD320T54W**	**CRD320T55W**	**CRD320T56W**	1000	**RP6R20A100**
							1200	**RP6R20A120**
							1600	**RP6R20A160**
							2000	**RP6R20A200**
Three-Pole High Interrupting Capacity 600 Vac Rated 100 kAIC at 480 Vac								
1600	—	**CRDC316T53W**	**CRDC316T52W**	**CRDC316T54W**	**CRDC316T55W**	**CRDC316T56W**	800	**RP6R16A080**
							1000	**RP6R16A100**
							1200	**RP6R16A120**
							1600	**RP6R16A160**
2000 ①	**CRDC320T51W**	**CRDC320T53W**	**CRDC320T52W**	**CRDC320T54W**	**CRDC320T55W**	**CRDC320T56W**	1000	**RP6R20A100**
							1200	**RP6R20A120**
							1600	**RP6R20A160**
							2000	**RP6R20A200**

Note

① Includes B2016RDL rear connectors.

Digitrip RMS 610 Electronic Circuit Breakers with Interchangeable Rating Plugs

Order as individual components: breaker frame (which includes trip unit) and rating plug.

Digitrip RMS 610 Electronic Circuit Breakers with Interchangeable Rating Plugs

Maximum Continuous Ampere Rating at 40 °C	Circuit Breaker Frame Only L – Adjustable Long Delay Pickup (I_r) with Adjustable Long Delay Time S – Adjustable Short Delay Pickup with Adjustable Short Delay Time (I^2t or Flat Response) I – Adjustable Instantaneous Pickup G – Adjustable Ground Fault Pickup with Adjustable Ground Fault Time Delay (I^2t or Flat Response) LI Catalog Number	LS	LSI	LIG	LSG	LSIG	Digitrip Rating Plug Only Rated Current (I_n)	Fixed Rating Plug Catalog Number
Three-Pole Standard Interrupting Capacity 600 Vac Rated 65 kAIC at 480 Vac								
1600	**RD316T61W**	**RD316T63W**	**RD316T62W**	**RD316T64W**	**RD316T65W**	**RD316T66W**	800	**RP6R16A080**
							1000	**RP6R16A100**
							1200	**RP6R16A120**
							1600	**RP6R16A160**
2000	**RD320T61W**	**RD320T63W**	**RD320T62W**	**RD320T64W**	**RD320T65W**	**RD320T66W**	1000	**RP6R20A100**
							1200	**RP6R20A120**
							1600	**RP6R20A160**
							2000	**RP6R20A200**
2500	**RD325T61W**	**RD325T63W**	**RD325T62W**	**RD325T64W**	**RD325T65W**	**RD325T66W**	1600	**RP6R25A160**
							2000	**RP6R25A200**
							2500	**RP6R25A250**
Three-Pole High Interrupting Capacity 600 Vac Rated 100 kAIC at 480 Vac								
1600	**RDC316T61W**	**RDC316T63W**	**RDC316T62W**	**RDC316T64W**	**RDC316T65W**	**RDC316T66W**	800	**RP6R16A080**
							1000	**RP6R16A100**
							1200	**RP6R16A120**
							1600	**RP6R16A160**
2000	**RDC320T61W**	**RDC320T63W**	**RDC320T62W**	**RDC320T64W**	**RDC320T65W**	**RDC320T66W**	1000	**RP6R20A100**
							1200	**RP6R20A120**
							1600	**RP6R20A160**
							2000	**RP6R20A200**
2500	**RDC325T61W**	**RDC325T63W**	**RDC325T62W**	**RDC325T64W**	**RDC325T65W**	**RDC325T66W**	1600	**RP6R25A160**
							2000	**RP6R25A200**
							2500	**RP6R25A250**

100% Rated Digitrip RMS 610 Circuit Breakers

The NEC allows the breaker to be rated at 100% of its frame size in an assembly, provided that 90 °C wire is applied at 75 °C ampacity. Order as individual components: breaker frame (which includes trip unit) and rating plug.

100% Rated Digitrip RMS 610 Circuit Breakers

Maximum Continuous Ampere Rating at 40 °C	Circuit Breaker Frame Only L – Adjustable Long Delay Pickup (I_r) with Adjustable Long Delay Time S – Adjustable Short Delay Pickup with Adjustable Short Delay Time (I^2t or Flat Response) I – Adjustable Instantaneous Pickup G – Adjustable Ground Fault Pickup with Adjustable Ground Fault Time Delay (I^2t or Flat Response)						Digitrip Rating Plug Only	
	LI Catalog Number	LS	LSI	LIG	LSG	LSIG	Rated Current (I_n)	Fixed Rating Plug Catalog Number
Three-Pole Standard Interrupting Capacity 600 Vac Rated 65 kAIC at 480 Vac								
1600	**CRD316T61W**	**CRD316T63W**	**CRD316T62W**	**CRD316T64W**	**CRD316T65W**	**CRD316T66W**	800	**RP6R16A080**
							1000	**RP6R16A100**
							1200	**RP6R16A120**
							1600	**RP6R16A160**
2000 ①	**CRD320T61W**	**CRD320T63W**	**CRD320T62W**	**CRD320T64W**	**CRD320T65W**	**CRD320T66W**	1000	**RP6R20A100**
							1200	**RP6R20A120**
							1600	**RP6R20A160**
							2000	**RP6R20A200**
Three-Pole High Interrupting Capacity 600 Vac Rated 100 kAIC at 480 Vac								
1600	**CRDC316T61W**	**CRDC316T63W**	**CRDC316T62W**	**CRDC316T64W**	**CRDC316T65W**	**CRDC316T66W**	800	**RP6R16A080**
							1000	**RP6R16A100**
							1200	**RP6R16A120**
							1600	**RP6R16A160**
2000 ①	**CRDC320T61W**	**CRDC320T63W**	**CRDC320T62W**	**CRDC320T64W**	**CRDC320T65W**	**CRDC320T66W**	1000	**RP6R20A100**
							1200	**RP6R20A120**
							1600	**RP6R20A160**
							2000	**RP6R20A200**

Note

① Includes B2016RDL rear connectors.

Digitrip RMS 810 Electronic Circuit Breakers with Interchangeable Rating Plugs

Order as individual components: breaker frame (which includes trip unit) and rating plug.

Digitrip RMS 810 Electronic Circuit Breakers with Interchangeable Rating Plugs

Maximum Continuous Ampere Rating at 40 °C	Circuit Breaker Frame Only L – Adjustable Long Delay Pickup (I_r) with Adjustable Long Delay Time S – Adjustable Short Delay Pickup with Adjustable Short Delay Time (I^2t or Flat Response) I – Adjustable Instantaneous Pickup G – Adjustable Ground Fault Pickup with Adjustable Ground Fault Time Delay (I^2t or Flat Response) LI Catalog Number	LS	LSI	LIG	LSG	LSIG	Digitrip Rating Plug Only Rated Current (I_n)	Fixed Rating Plug Catalog Number
Three-Pole Standard Interrupting Capacity 600 Vac Rated 65 kAIC at 480 Vac								
1600	**RD316T81W**	**RD316T83W**	**RD316T82W**	**RD316T84W**	**RD316T85W**	**RD316T86W**	800	**RP6R16A080**
							1000	**RP6R16A100**
							1200	**RP6R16A120**
							1600	**RP6R16A160**
2000	**RD320T81W**	**RD320T83W**	**RD320T82W**	**RD320T84W**	**RD320T85W**	**RD320T86W**	1000	**RP6R20A100**
							1200	**RP6R20A120**
							1600	**RP6R20A160**
							2000	**RP6R20A200**
2500	**RD325T81W**	**RD325T83W**	**RD325T82W**	**RD325T84W**	**RD325T85W**	**RD325T86W**	1600	**RP6R25A160**
							2000	**RP6R25A200**
							2500	**RP6R25A250**
Three-Pole High Interrupting Capacity 600 Vac Rated 100 kAIC at 480 Vac								
1600	**RDC316T81W**	**RDC316T83W**	**RDC316T82W**	**RDC316T84W**	**RDC316T85W**	**RDC316T86W**	800	**RP6R16A080**
							1000	**RP6R16A100**
							1200	**RP6R16A120**
							1600	**RP6R16A160**
2000	**RDC320T81W**	**RDC320T83W**	**RDC320T82W**	**RDC320T84W**	**RDC320T85W**	**RDC320T86W**	1000	**RP6R20A100**
							1200	**RP6R20A120**
							1600	**RP6R20A160**
							2000	**RP6R20A200**
2500	**RDC325T81W**	**RDC325T83W**	**RDC325T82W**	**RDC325T84W**	**RDC325T85W**	**RDC325T86W**	1600	**RP6R25A160**
							2000	**RP6R25A200**
							2500	**RP6R25A250**

100% Rated Digitrip RMS 810 Circuit Breakers

The NEC allows the breaker to be rated at 100% of its frame size in an assembly, provided that 90 °C wire is applied at 75 °C ampacity. Order as individual components: breaker frame (which includes trip unit) and rating plug.

100% Rated Digitrip RMS 810 Circuit Breakers

Maximum Continuous Ampere Rating at 40 °C	Circuit Breaker Frame Only L – Adjustable Long Delay Pickup (I_r) with Adjustable Long Delay Time S – Adjustable Short Delay Pickup with Adjustable Short Delay Time (I^2t or Flat Response) I – Adjustable Instantaneous Pickup G – Adjustable Ground Fault Pickup with Adjustable Ground Fault Time Delay (I^2t or Flat Response) LI Catalog Number	LS	LSI	LIG	LSG	LSIG	Digitrip Rating Plug Only Rated Current (I_n)	Fixed Rating Plug Catalog Number
Three-Pole Standard Interrupting Capacity 600 Vac Rated 65 kAIC at 480 Vac								
1600	**CRD316T81W**	**CRD316T83W**	**CRD316T82W**	**CRD316T84W**	**CRD316T85W**	**CRD316T86W**	800	**RP6R16A080**
							1000	**RP6R16A100**
							1200	**RP6R16A120**
							1600	**RP6R16A160**
2000 ①	**CRD320T81W**	**CRD320T83W**	**CRD320T82W**	**CRD320T84W**	**CRD320T85W**	**CRD320T86W**	1000	**RP6R20A100**
							1200	**RP6R20A120**
							1600	**RP6R20A160**
							2000	**RP6R20A200**
Three-Pole High Interrupting Capacity 600 Vac Rated 100 kAIC at 480 Vac								
1600	**CRDC316T81W**	**CRDC316T83W**	**CRDC316T82W**	**CRDC316T84W**	**CRDC316T85W**	**CRDC316T86W**	800	**RP6R16A080**
							1000	**RP6R16A100**
							1200	**RP6R16A120**
							1600	**RP6R16A160**
2000 ①	**CRDC320T81W**	**CRDC320T83W**	**CRDC320T82W**	**CRDC320T84W**	**CRDC320T85W**	**CRDC320T86W**	1000	**RP6R20A100**
							1200	**RP6R20A120**
							1600	**RP6R20A160**
							2000	**RP6R20A200**

Note

① Includes B2016RDL rear connectors.

Digitrip RMS 910 Electronic Circuit Breakers with Interchangeable Rating Plugs

Order as individual components: breaker frame (which includes trip unit) and rating plug.

Digitrip RMS 910 Electronic Circuit Breakers with Interchangeable Rating Plugs

Maximum Continuous Ampere Rating at 40 °C	Circuit Breaker Frame Only L – Adjustable Long Delay Pickup (I_r) with Adjustable Long Delay Time S – Adjustable Short Delay Pickup with Adjustable Short Delay Time (I^2t or Flat Response) I – Adjustable Instantaneous Pickup G – Adjustable Ground Fault Pickup with Adjustable Ground Fault Time Delay (I^2t or Flat Response) LI Catalog Number	LS	LSI	LIG	LSG	LSIG	Digitrip Rating Plug Only Rated Current (I_n)	Fixed Rating Plug Catalog Number
Three-Pole Standard Interrupting Capacity 600 Vac Rated 65 kAIC at 480 Vac								
1600	**RD316T91W**	**RD316T93W**	**RD316T92W**	**RD316T94W**	**RD316T95W**	**RD316T96W**	800	**RP6R16A080**
							1000	**RP6R16A100**
							1200	**RP6R16A120**
							1600	**RP6R16A160**
2000	**RD320T91W**	**RD320T93W**	**RD320T92W**	**RD320T94W**	**RD320T95W**	**RD320T96W**	1000	**RP6R20A100**
							1200	**RP6R20A120**
							1600	**RP6R20A160**
							2000	**RP6R20A200**
2500	**RD325T91W**	**RD325T93W**	**RD325T92W**	**RD325T94W**	**RD325T95W**	**RD325T96W**	1600	**RP6R25A160**
							2000	**RP6R25A200**
							2500	**RP6R25A250**
Three-Pole High Interrupting Capacity 600 Vac Rated 100 kAIC at 480 Vac								
1600	**RDC316T91W**	**RDC316T93W**	**RDC316T92W**	**RDC316T94W**	**RDC316T95W**	**RDC316T96W**	800	**RP6R16A080**
							1000	**RP6R16A100**
							1200	**RP6R16A120**
							1600	**RP6R16A160**
2000	**RDC320T91W**	**RDC320T93W**	**RDC320T92W**	**RDC320T94W**	**RDC320T95W**	**RDC320T96W**	1000	**RP6R20A100**
							1200	**RP6R20A120**
							1600	**RP6R20A160**
							2000	**RP6R20A200**
2500	**RDC325T91W**	**RDC325T93W**	**RDC325T92W**	**RDC325T94W**	**RDC325T95W**	**RDC325T96W**	1600	**RP6R25A160**
							2000	**RP6R25A200**
							2500	**RP6R25A250**

100% Rated Digitrip RMS 910 Circuit Breakers

The NEC allows the breaker to be rated at 100% of its frame size in an assembly, provided that 90 °C wire is applied at 75 °C ampacity. Order as individual components: breaker frame (which includes trip unit) and rating plug.

100% Rated Digitrip RMS 910 Circuit Breakers

Maximum Continuous Ampere Rating at 40 °C	Circuit Breaker Frame Only L – Adjustable Long Delay Pickup (I_r) with Adjustable Long Delay Time S – Adjustable Short Delay Pickup with Adjustable Short Delay Time (I^2t or Flat Response) I – Adjustable Instantaneous Pickup G – Adjustable Ground Fault Pickup with Adjustable Ground Fault Time Delay (I^2t or Flat Response) LI Catalog Number	LS	LSI	LIG	LSG	LSIG	Digitrip Rating Plug Only Rated Current (I_n)	Fixed Rating Plug Catalog Number
Three-Pole Standard Interrupting Capacity 600 Vac Rated 65 kAIC at 480 Vac								
1600	**CRD316T91W**	**CRD316T93W**	**CRD316T92W**	**CRD316T94W**	**CRD316T95W**	**CRD316T96W**	800	**RP6R16A080**
							1000	**RP6R16A100**
							1200	**RP6R16A120**
							1600	**RP6R16A160**
2000 ①	**CRD320T91W**	**CRD320T93W**	**CRD320T92W**	**CRD320T94W**	**CRD320T95W**	**CRD320T96W**	1000	**RP6R20A100**
							1200	**RP6R20A120**
							1600	**RP6R20A160**
							2000	**RP6R20A200**
Three-Pole High Interrupting Capacity 600 Vac Rated 100 kAIC at 480 Vac								
1600	**CRDC316T91W**	**CRDC316T93W**	**CRDC316T92W**	**CRDC316T94W**	**CRDC316T95W**	**CRDC316T96W**	800	**RP6R16A080**
							1000	**RP6R16A100**
							1000	**RP6R16A100**
							1200	**RP6R16A120**
2000 ①	**CRDC320T91W**	**CRDC320T93W**	**CRDC320T92W**	**CRDC320T94W**	**CRDC320T95W**	**CRDC320T96W**	1000	**RP6R20A100**
							1200	**RP6R20A120**
							1600	**RP6R20A160**
							2000	**RP6R20A200**

Note

① Includes B2016RDL rear connectors.

Digitrip OPTIM Electronic Circuit Breakers with Interchangeable Rating Plugs

Order as individual components: breaker frame (which includes trip unit) and rating plug.

Digitrip OPTIM Electronic Circuit Breakers with Interchangeable Rating Plugs

Maximum Continuous Ampere Rating at 40 °C	Circuit Breaker Frame Only L – Adjustable Long Delay Pickup (I_r) with Adjustable Long Delay Time S – Adjustable Short Delay Pickup with Adjustable Short Delay Time (I^2t or Flat Response) I – Adjustable Instantaneous Pickup G – Adjustable Ground Fault Pickup with Adjustable Ground Fault Time Delay (I^2t or Flat Response) A – Adjustable Ground Fault Alarm with Adjustable Ground Fault Time Delay (I^2t or Flat Response) LSIA 1050 Catalog Number	LSIG 1050 Catalog Number	Digitrip OPTIM Rating Plug Only Ampere Rating	Fixed Rating Plug Catalog Number
Three-Pole Standard Interrupting Capacity 600 Vac Rated 65 kAIC at 480 Vac				
1600	**RD316T107W**	**RD316T106W**	800	**ORPR16A080**
			1000	**ORPR16A100**
			1200	**ORPR16A120**
			1600	**ORPR16A160**
2000	**RD320T107W**	**RD320T106W**	1000	**ORPR20A100**
			1200	**ORPR20A120**
			1600	**ORPR20A160**
			2000	**ORPR20A200**
2500	**RD325T107W**	**RD325T106W**	1600	**ORPR25A160**
			2000	**ORPR25A200**
			2500	**ORPR25A250**
Three-Pole High Interrupting Capacity 600 Vac Rated 100 kAIC at 480 Vac				
1600	**RDC316T107W**	**RDC316T106W**	800	**ORPR16A080**
			1000	**ORPR16A100**
			1200	**ORPR16A120**
			1600	**ORPR16A160**
2000	**RDC320T107W**	**RDC320T106W**	1000	**ORPR20A100**
			1200	**ORPR20A120**
			1600	**ORPR20A160**
			2000	**ORPR20A200**
2500	**RDC325T107W**	**RDC325T106W**	1600	**ORPR25A160**
			2000	**ORPR25A200**
			2500	**ORPR25A250**

100% Rated 600 Volts AC Digitrip OPTIM Circuit Breakers with Interchangeable Rating Plugs

Order as individual components: breaker frame (which includes trip unit) and rating plug.

100% Rated 600 Volts AC Digitrip OPTIM Circuit Breakers with Interchangeable Rating Plugs

Maximum Continuous Ampere Rating at 40 °C	Circuit Breaker Frame Only L – Adjustable Long Delay Pickup (I_r) with Adjustable Long Delay Time S – Adjustable Short Delay Pickup with Adjustable Short Delay Time (I^2t or Flat Response) I – Adjustable Instantaneous Pickup G – Adjustable Ground Fault Pickup with Adjustable Ground Fault Time Delay (I^2t or Flat Response) A – Adjustable Ground Fault Alarm with Adjustable Ground Fault Time Delay (I^2t or Flat Response) LSIA 1050 Catalog Number	LSIG 1050 Catalog Number	Digitrip OPTIM Rating Plug Only Ampere Rating	Fixed Rating Plug Catalog Number
Three-Pole Standard Interrupting Capacity 600 Vac Rated 65 kAIC at 480 Vac				
1600	**CRD316T107W**	**CRD316T106W**	800	**ORPR16A080**
			1000	**ORPR16A100**
			1200	**ORPR16A120**
			1600	**ORPR16A160**
2000 ①	**CRD320T107W**	**CRD320T106W**	1000	**ORPR20A100**
			1200	**ORPR20A120**
			1600	**ORPR20A160**
			2000	**ORPR20A200**
Three-Pole High Interrupting Capacity 600 Vac Rated 100 kAIC at 480 Vac				
1600	**CRDC316T107W**	**CRDC316T106W**	800	**ORPR16A080**
			1000	**ORPR16A100**
			1200	**ORPR16A120**
			1600	**ORPR16A160**
2000 ①	**CRDC320T107W**	**CRDC320T106W**	1000	**ORPR20A100**
			1200	**ORPR20A120**
			1600	**ORPR20A160**
			2000	**ORPR20A200**

Molded Case Switches

Refer to Eaton for UL listed, series tested Molded Case Switch application data.

Type RD—High Instantaneous (K)

Continuous Ampere Rating at 40 °C	Complete without Terminals Three-Pole Catalog Number	Four-Pole Catalog Number
1600	**RD316WK**	**RD416WK**
2000	**RD320WK**	**RD420WK**

Notes

① Includes B2016RDL rear connectors.

Molded case switch may trip above 17,500 amperes.

Accessories Selection Guide and Ordering Information

Line and Load Terminals

Line and load terminals provide wire connecting capabilities for specific ranges of continuous current ratings and wire types. All terminals comply with Underwriters Laboratories Standards UL 486A and UL 486B and CSA C22.2 No. 65M. Unless otherwise specified, R-Frame circuit breaker line load terminals are shipped separately for field installation.

Ordering Information

R-Frame circuit breakers have Cu/Al terminals as standard and Cu only terminals as an option. Specify if factory installation is required.

Line and Load Terminals

Maximum Breaker Amperes	Terminal Body Material	Wire Type	Hardware	AWG/kcmil Wire Range/ No. Conductors	Metric Wire Range mm^2	Catalog Number
Wire Terminals						
1600	Aluminum	Cu/Al	English	500–1000 (4)	300–500	**TA1600RD**
1600	Copper	Cu	English	1–600 (4)	50–300	**T1600RD**
2000	Aluminum	Cu/Al	English	2–600 (6)	35–300	**TA2000RD** ①
Rear Connectors						
2000	Copper	—	English	—	—	**B2016RD**
2000	Copper	—	English	—	—	**B2016RDL** ②
2500	Copper	—	English	—	—	**B2500RD** ③

Notes

① Catalog Number includes bus connection, terminals and hardware for either line side or load side of three-pole breaker.

② For use with 100% rated 1600 A and 2000 A frame. Do not order separately unless for replacement purposes. Included in breaker carton when 100% rated device is ordered.

③ For use with 2500 A frame. Do not order separately unless for replacement purposes. Included in breaker carton when 2500 A breaker is ordered.

Mounting Hardware

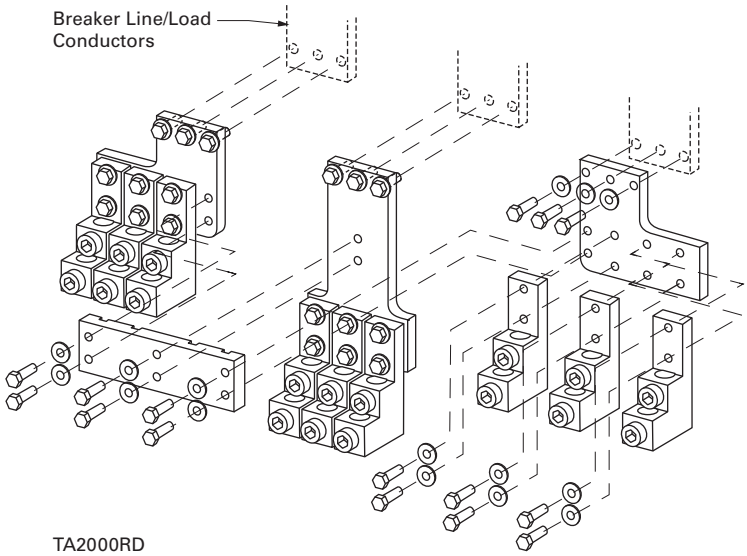

TA2000RD

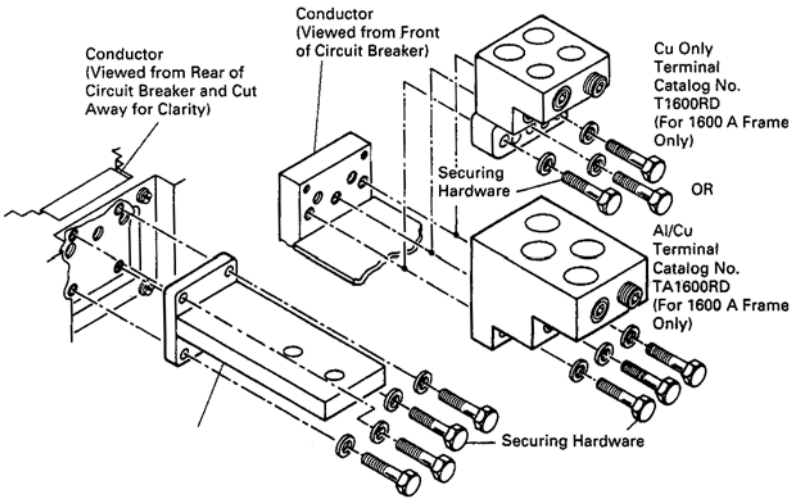

Accessories

Allowable Accessory Combinations

Different combinations of accessories can be supplied, depending on the types of accessories and the number of poles in the circuit breaker.

RD Frame Accessories

Description	Reference Page	Three-Pole Left	Three-Pole Center	Three-Pole Right	Four-Pole Left	Four-Pole Center	Four-Pole Right	Neu.
Internal Accessories ①								
Alarm lockout (Make/Break)	**V4-T2-276**			■			■	
Alarm lockout (2Make/2Break)	**V4-T2-276**			■			■	
Auxiliary switch (2A, 2B)	**V4-T2-276**			■			■	
Auxiliary switch (4A, 4B)	**V4-T2-276**			■			■	
Shunt trip—standard	**V4-T2-284**			■			■	
Shunt trip—low energy	**V4-T2-285**			■			■	
Undervoltage release mechanism	**V4-T2-292**			■			■	
Accessory terminal block ②	**V4-T2-293**			■				■
External Accessories								
Base mounting hardware	**V4-T2-311**							
Padlockable handle lock hasp	**V4-T2-314**		●			●		
Key interlock kit	**V4-T2-316**	■	■	■		■		
Walking beam interlock	**V4-T2-317**							
Electrical (motor) operator	**V4-T2-319**	■	■	■		■		
Handle mechanisms	**V4-T2-432**	■	■	■		■		
Handle extension ③	**V4-T2-447**		■			■		
OPTIM System Components								
Breaker interface module (BIM)	**V4-T2-325**	●	●	●				
Digitrip OPTIMizer	**V4-T2-325**	●	●	●				
Auxiliary power module	**V4-T2-325**	●	●	●				
Modifications (Refer to Eaton)								
Special calibration	—	●	●	●	●	●	●	●
Moisture fungus treatment	**V4-T2-116**	●	●	●	●	●	●	●
Freeze-tested circuit breakers	—	●	●	●	●	●	●	●
Marine/naval application	—	●	●	●	●	●	●	●

Legend

■ Applicable in indicated pole position

● Accessory available/modification available

Notes

① All accessories mount in the RH cavity which will accept one each shunt trip, UVR, auxiliary switch and alarm switch.

② Mounts outside breaker.

③ Included with breaker.

Technical Data and Specifications

UL 489/CSA Interrupting Capacity Ratings ①

Circuit Breaker Type	Number of Poles	Interrupting Capacity (kA Symmetrical Amperes) Volts AC (50/60 Hz) 240	277	480	600
RD	3, 4	125	—	65	50
CRD ②	3	125	—	65	50
RDC	3, 4	200	—	100	65
CRDC ②	3	200	—	100	65

IEC 947-2 Interrupting Capacity Ratings ①

Circuit Breaker Type	Number of Poles	Interrupting Capacity (kA Symmetrical Amperes) Volts AC (50/60 Hz) 240	415	690
RD				
I_{cu}	3, 4	135	70	25
I_{cs}	3, 4	100	50	13
RDC				
I_{cu}	3, 4	200	100	35
I_{cs}	3, 4	100	50	18

Notes

① Utilization Category A circuit breakers.

② 100% rated breakers.

See **Page V4-T2-253** for Trip Unit Specifications.

Specifications

R-Frame Digitrip

Trip Unit Type	Digitrip RMS 510	Digitrip RMS 610	Digitrip RMS 810	Digitrip RMS 910	Digitrip OPTIM 1050
rms sensing	Yes	Yes	Yes	Yes	Yes
Breaker Type					
Frame	R	R	R	R	R
Ampere range	800–2500 A	800–2500 A	800–2500 A	800–2500 A	800–2500 A
Interrupting rating at 480 volts	65, 100 (kA)	65, 100 (kA)	65, 100 (kA)	65, 100 (kA)	65, 100 (kA)
Protection					
Ordering options	LI, LS, LSI, LIG, LSG, LSIG	LI, LS, LSI, LIG, LSG, LSIG	LI, LS, LSI, LIG, LSG, LSIG	LI, LS, LSI, LIG, LSG, LSIG	LSI(A), LISG
Fixed rated plug (I_n)	Yes	Yes	Yes	Yes	Yes
Overtemperature trip	Yes	Yes	Yes	Yes	Yes
Long Delay Protection (L)					
Adjustable rating plug (I_n)	No	No	No	No	No
Long delay pickup	0.5–1.0 x (I_n)	0.5–1.0 x (I_n)	0.5–1.0 x (I_n)	0.5 –1.0 x (I_n)	0.4–1.0 x (I_n)
Long delay time I^2t	2–24 seconds	2–24 seconds	2–24 seconds	2–24 seconds	2–24 seconds
Long delay time I^4t	No	No	No	No	1–5 Seconds
Long delay thermal memory	Yes	Yes	Yes	Yes	Yes
High load alarm	No	0.85 x I_r	0.85 x I_r	0.85 x I_r	0.5-1.0 x I_r
Short Delay Protection (S)					
Short delay pickup	200–600% S1 and S2 x (I_r)	200–600% S1 and S2 x (I_r)	200–600% S1 and S2 x (I_r)	200–600% S1 and S2 x (I_r)	150-800% x (I_r) ①②
Short delay time I^2t	100–500 ms	100–500 ms	100–500 ms	100–500 ms	100–500 ms
Short delay time flat	100–500 ms	100–500 ms	100–500 ms	100–500 ms	100–500 ms
Short delay time zone selective interlocking	Yes	Yes	Yes	Yes	Yes
Instantaneous Protection (I)					
Instantaneous pickup	200–600% M1and M2 x (I_n)	200–600% M1and M2 x (I_n)	200–600% M1and M2 x (I_n)	200–600% M1and M2 x (I_n)	200–800% x (I_n) ②
Discriminator	Yes ③	Yes ③	Yes ③	Yes ③	Yes
Instantaneous override	Yes	Yes	Yes	Yes	Yes
Ground Fault Protection (G)					
Ground fault alarm ④	No	No	No	No	25–100% x (I_n)
Ground fault pickup ④	25–100% x (I_s)	25-100% x (I_s)	25–100% x (I_s)	25–100% x (I_s)	25–100% x (I_n)
Ground fault delay I^2t	100–500 ms	100–500 ms	100–500 ms	100–500 ms	100–500 ms
Ground fault delay flat	100–500 ms	100–500 ms	100 –500 ms	100–500 ms	100–500 ms
Ground fault zone selective interlocking	Yes	Yes	Yes	Yes	Yes
Ground fault thermal memory	Yes	Yes	Yes	Yes	Yes

Legend

BIM = Breaker Interface Module
(A) = GF Alarm
I_s = Sensor Rating
I_n = Rating Plug
I_r = Long Delay Pickup Setting x I_n

Notes

① Except 2500 ampere frame is 200–600%.
② Varies by frame.
③ LS/LSG only.
④ Not to exceed 1200 amperes.

R-Frame Digitrip, continued

Trip Unit Type	Digitrip RMS 510	Digitrip RMS 610	Digitrip RMS 810	Digitrip RMS 910	Digitrip OPTIM 1050
System Diagnostics					
Status LEDs	Yes	Yes	Yes	Yes	Yes
Cause of trip LEDs	Yes	Yes	Yes	Yes	Yes
Magnitude of trip information	No	Yes	Yes	Yes	Yes
Remote signal contacts	No	Yes	Yes	Yes	Yes
System Monitoring					
Digital display	No	Yes	Yes	Yes	Yes ①
Current	No	Yes	Yes	Yes	Yes
Voltage	No	No	No	Yes	No
Power and energy	No	No	Yes	Yes	Yes
Power quality—harmonics	No	No	No	Yes	Yes
Power factor	No	No	Yes (over Eaton PowerNet only)	Yes	Yes
Communications					
Eaton PowerNet	No	No	Yes	Yes	Yes
Testing					
Testing method	Integral	Integral	Integral	Integral	OPTIMizer, BIM, PowerNet

Legend

BIM = Breaker Interface Module
(A) = GF Alarm
I_s = Sensor Rating
I_n = Rating Plug
I_r = Long Delay Pickup Setting x I_n

Note

① By OPTIMizer/BIM.

Dimensions and Weights

Dimensions in Inches (mm)

RD Frame

Number of Poles	Width	Height	Depth
3	15.50 (393.7)	16.00 (406.4)	9.75 (247.7)
4	20.00 (508.0)	16.00 (406.4)	9.75 (247.7)

RD-Frame, Three-Pole, 1600 and 2000 Amperes

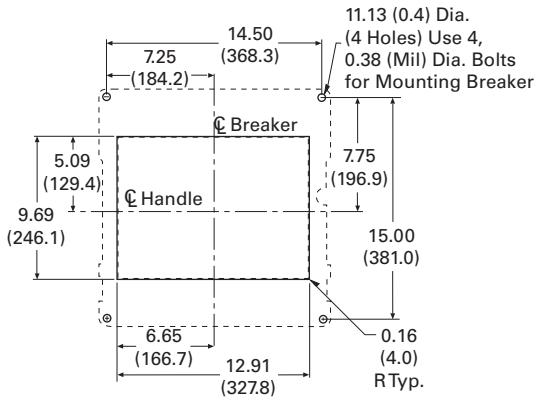

Front View

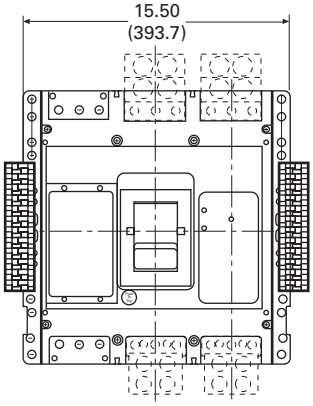

Side View

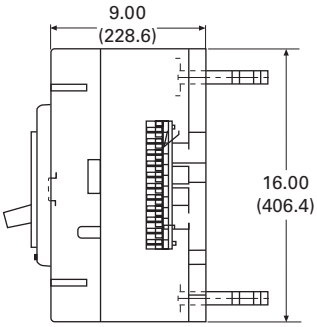

Approximate Shipping Weight in Lbs (kg)

RD Frame

Breaker Type	Complete Breaker Three-Pole	Four-Pole
1600 Amperes		
RD, CRD ①, RDC, CRDC ①	102 (46.3)	135 (61.2)
2000 Amperes		
RD, RDC	102 (46.3)	135 (61.2)
CRD, CRDC	130 (59.0)	175 (79.4)
2500 Amperes		
RD, RDC	135 (61.2)	182 (82.6)

Note

① No four-pole for CRD and CRDC.

Motor Circuit Protectors

Contents

Description	*Page*
Product Overview	**V4-T2-116**
Standards and Certifications	**V4-T2-117**
Quick Reference	**V4-T2-118**
G-Frame (15–100 Amperes)	**V4-T2-121**
F-Frame (10–225 Amperes)	**V4-T2-135**
J-Frame (70–250 Amperes)	**V4-T2-153**
K-Frame (70–400 Amperes)	**V4-T2-161**
L-Frame (125–600 Amperes)	**V4-T2-185**
M-Frame (300–800 Amperes)	**V4-T2-211**
N-Frame (400–1200 Amperes)	**V4-T2-222**
R-Frame (800–2500 Amperes)	**V4-T2-237**
Motor Circuit Protectors (MCP)	
Catalog Number Selection	**V4-T2-257**
Product Selection	**V4-T2-258**
Accessories	**V4-T2-259**
Motor Protection Circuit Breakers (MPCB)	**V4-T2-267**
Type ELC Current Limiter Attachment (Size 0–4)	**V4-T2-269**
Current Limiting Circuit Breaker Module	**V4-T2-270**
Internal Accessories	**V4-T2-273**
External Accessories	**V4-T2-304**

Motor Circuit Protectors (MCP)

Product Description

Designated as Eaton's Types GMCP and HMCP, the instantaneous-only motor circuit protector (MCP) is available in ratings from 3 A to 1200 A for motor starter sizes 0 through 8.

An innovative design of internal components allows higher MCP-starter combination interrupting ratings. The MCP is marked to permit proper electrical application within the assigned equipment ratings.

Standards and Certifications

The MCP is designed to comply with the applicable requirements of Underwriters Laboratories Standard UL 489, Canadian Standards Association Standard C22.2 No. 5.1, and International Electrotechnical Commission Recommendations IEC 157-1.

The MCP is a recognized component (UL File E7819) and complies with the applicable requirements of Underwriters Laboratories Standard UL 489. It is also designed to comply with the applicable requirements of Canadian Standards Association Standard C22.2 No. 5.1, International Electrotechnical Commission Recommendations IEC 157-1, and nameplates bear the CE marking.

Listed

Note: Interrupting ratings are dependent on starter it is used with.

Catalog Number Selection

This information is presented only as an aid to understanding catalog numbers.
It is not to be used to build catalog numbers for circuit breakers or trip units.

Motor Circuit Protector

HMCP 003 A0 C

Motor Circuit Protective Type
HMCP = Three-pole
HM2P = Two-pole ①
HMCPS = Three-pole

Continuous Ampere Rating
003
007
015
025
030
050
070
100
150
250
400
600
800
1200

Magnetic Trip Range/ NEMA Starter Size
A0 = 9–30/0
C0 = 21–70/0
E0 = 45–150/0
D0 = 40–60/0
H1 = 90–300/1
G2 = 80–120/2
K2 = 50–500/2
J2 = 115–170/2
M2 = 210–700/2
L3 = 160–240/3
R3 = 300–1000/3
T4 = 450–1500/4
U4 = 750–2500/4
A5 = 350–700/5
C5 = 450–900/5
D5 = 500–1000/5
F5 = 625–1250/5
G5 = 750–1500/5
J5 = 875–1750/5
K5 = 1000–2000/5
L5 = 1125–2250/5
W5 = 1250–2500/5
N5 = 1500–3000/5
R5 = 1750–3500/5
X5 = 2000–4000/5
Y5 = 2250–4500/5
L6 = 1800–6000/6 (electronic)
X6 = 500–2500/6 (electronic)
Y6 = 1000–4000/6 (electronic)
X7 = 1600–6400/7 (electronic)
Y8 = 2400–9600/8 (electronic)

Suffix
C = Non-aluminum terminals
W = Without terminals
X = Load terminals only
Y = Line terminals only
S = Stainless steel terminals (150A frame only)
No Suffix: Standard terminals on line and load

Motor Circuit Protector

GMCP 003 A0 C

Motor Circuit Protective Device
GMCP = Three-pole

Continuous Ampere Rating
003
007
015
030
050
060
063

Magnetic Trip Range/NEMA Starter Size
A0 = 15–30/0
C0 = 35–70/0
E0 = 75–150/0
H1 = 150–300/1
K2 = 250–500/2
J2 = 300–600/2
M2 = 320–630/2

Suffix
C = Non-aluminum terminals

Note

① On J- and K-Frame HMCPs only.

Product Selection

G-Frame

480 Vac Maximum, 600Y/347 Vac

NEMA Starter Size	Continuous Amperes	Cam Setting	Motor Full Load Current Amperes (FLA) ①	MCP Trip Setting	MCP Catalog Number
0	3	A	1.1–1.2	15	**GMCP003A0C**
		B	1.3–1.5	18	
		C	1.6–1.7	21	
		D	1.8–1.9	24	
		E	2.0–2.2	27	
		F	2.3–2.5	30	
0	7	A	2.6–3.1	35	**GMCP007C0C**
		B	3.2–3.6	42	
		C	3.7–3.9	49	
		D	4.3–4.7	56	
		E	4.8–5.2	63	
		F	5.3–5.7	70	
0	15	A	5.7–6.8	75	**GMCP015E0C**
		B	6.9–7.9	90	
		C	8.0–9.1	105	
		D	9.2–10.3	120	
		E	10.4–11.4	135	
		F	11.5–12.6	150	
1	30	A	11.5–13.7	150	**GMCP030H1C**
		B	13.8–16.0	180	
		C	16.1–18.3	210	
		D	18.4–20.6	240	
		E	20.7–22.9	270	
		F	23.0–25.2	300	
2	50	A	19.3–22.9	250	**GMCP050K2C**
		B	23.0–26.8	300	
		C	26.9–30.6	350	
		D	30.7–34.5	400	
		E	34.6–38.3	450	
		F	38.4–42.1	500	
3	60	A	23.1–27.5	300	**GMCP060J2C**
		B	27.7–32.2	360	
		C	32.3–36.7	420	
		D	36.9–41.4	480	
		E	41.5–46.0	540	
		F	46.2–50.5	600	
3	63	A	24.2–32.1	320	**GMCP063M2C**
		B	29.1–34.8	380	
		D	38.8–46.4	500	
		E	43.6–48.9	570	
		F	48.5–53.7	630	

Notes

① Motor FLA ranges are typical. The corresponding trip setting is at 13 x the minimum FLA value shown. Where a 13 x setting is required for an intermediate FLA value, alternate Cam settings and/or MCP ratings should be used.

All GMCP 3–63A come with line and load steel body terminals for Cu only wire. Refer to **Page V4-T2-122** under Optional Terminal Types.

UL recognized and CSA approved.

Accessories

Modifications for GMCP

Internal accessories must be factory installed.

Internal Accessories ①

Type Accessory	Electrical Ratings Volts	Frequency	Amperes	Contact Arrangement	Factory Suffix	Style Number
Shunt trip ②	120	50/60 Hz	1.1	—	S5	**1373D62G18**
Shunt trip ②	240	50/60 Hz	2.1	—	S6	**1373D62G19**
Auxiliary switch ③	240	50/60 Hz	6.0	1A/1B	A3	**1288C74G03**
Auxiliary switch ③	240	50/60 Hz	6.0	2A/2B	A6	**1288C73G03**
Alarm switch ③	240	50/60 Hz	6.0	Make/Break	B3	**1288C75G03**
Auxiliary switch/alarm switch combination ③	240	50/60 Hz	6.0	1A/1B Make/Break	B13	**1288C76G09**

External Mounted Accessories

Description	Number Units in Package	Style Number
Lock dog (non-padlockable)	1	**1294C01H01**
Mounting hardware	1	**624B375G23**
DIN rail adapter ④	10	**1225C79G02**

Modifications for HMCP

See Internal Accessories starting on **Page V4-T2-273**.

Handle Mechanisms for Series C Frames

Kits Only (Kit Includes Shaft, Mechanism and Handle)—GMCP-Frame

	Description	Rating Type NEMA	IP	GMCP-Frame Catalog Number
S01 Blue Handle	S01 blue handle, 12-inch shaft	1/3R/12	54	**GMHMVD12B / 68C6039G05**
		4/4X	65	**GMHMVD12BX / 68C6039G07**
S01 Red Handle	S01 red handle, 12-inch shaft	1/3R/12	54	**GMHMVD12R / 68C6039G06**
		4/4X	65	**GMHMVD12RX / 68C6039G08**

Direct (Close-Coupled) Handle Mechanisms

G Direct ⑤

Frame	Black Handle With Shroud Catalog Number	Black Handle Without Shroud Catalog Number	Yellow Handle With Shroud Catalog Number	Yellow Handle Without Shroud Catalog Number
GMCP	**HRGMC1S**	**HRGMC10**	**HRGMC3S**	**HRGMC30**

Notes

① Only one accessory may be installed in GMCP.
② LH only.
③ RH only.
④ For use with standard 35 mm DIN rail such as, 35 x 7.5 or 15 mm per DIN EN50022.
⑤ Suitable for use on two- or three-pole G-Frame.

No UVR available on GMCP.

F-Frame

600 Vac Maximum, 250 Vdc Maximum

NEMA Starter Size	Cont. Amps	Cam Setting	Motor Full Load Current Amperes (FLA) ①	MCP Trip Setting ②	MCP Catalog Number
0	3	A	0.69–0.91	9	**HMCP003A0C**
		B	0.92–1.0	12	
		C	1.1–1.2	15	
		D	1.3–1.5	18	
		E	1.6–1.7	21	
		F	1.8–1.9	24	
		G	2.0–2.2	27	
		H	2.3–2.5	30	
0	7	A	1.5–2.0	21	**HMCP007C0C**
		B	2.1–2.5	28	
		C	2.6–3.1	35	
		D	3.2–3.6	42	
		E	3.7–3.9	49	
		F	4.3–4.7	56	
		G	4.8–5.2	63	
		H	5.3–5.7	70	
0	15	A	3.4–4.5	45	**HMCP015E0C**
		B	4.6–5.6	60	
		C	5.7–6.8	75	
		D	6.9–7.9	90	
		E	8.0–9.1	105	
		F	9.2–10.3	120	
		G	10.4–11.4	135	
		H	11.5 –12.6	150	
1	30	A	6.9–9.1	90	**HMCP030H1C**
		B	9.2–11.4	120	
		C	11.5–13.7	150	
		D	13.8–16.0	180	
		E	16.1–18.3	210	
		F	18.4–20.6	240	
		G	20.7–22.9	270	
		H	23.0–25.2	300	
2	50	A	11.5–15.2	150	**HMCP050K2C**
		B	15.3–19.1	200	
		C	19.2–22.9	250	
		D	23.0–26.8	300	
		E	26.9–30.6	350	
		F	30.7–4.5	400	
		G	34.6–38.3	450	
		H	38.4–42.1	500	

600 Vac Maximum, 250 Vdc Maximum, continued

NEMA Starter Size	Cont. Amps	Cam Setting	Motor Full Load Current Amperes (FLA) ①	MCP Trip Setting ②	MCP Catalog Number
2	70	A	16.1–21.4	210	**HMCP070M2C**
		B	21.5 –26.8	280	
		C	26.9 –32.2	350	
		D	32.3–37.5	420	
		E	37.6–42.9	490	
		F	43.0–48.3	560	
		G	48.4–53.7	630	
		H	53.8–59.1	700	
3	100	A	23.0–30.6	300	**HMCP100R3C**
		B	30.7–38.3	400	
		C	38.4–46.0	500	
		D	46.1–53.7	600	
		E	53.8 –61.4	700	
		F	61.5 –69.1	800	
		G	69.2–76.8	900	
		H	76.9–84.5	1000	
4	150	A	34.6–46.0	450	**HMCP150T4C**
		B	46.1–57.5	600	
		C	57.6–69.1	750	
		D	69.2–80.6	900	
		D	69.2–80.6	900	
		E	80.7–92.2	1050	
		F	92.3–103.7	1200	
		G	103.8–115.2	1350	
		H	115.3–126.7	1500	
4	150	A	57.0 –75.0	750	**HMCP150U4C**
		B	76.0–95.0	1000	
		C	96.0–114.0	1250	
		D	115.0–130.7	1500	
		E	③	1750	
		F	③	2000	
		G	③	2250	
		H	③	2500	

Notes

① Motor FLA ranges are typical. The corresponding trip setting is at 13 x the minimum FLA value shown. Where a 13 x setting is required for an intermediate FLA value, alternate Cam settings and/or MCP ratings should be used.

② For DC applications, actual trip levels are approximately 40% higher than values shown.

③ Settings above 130 amperes are for special applications. NEC Article 430.110(a) requires the ampere rating of the disconnecting means to be not less than 115% of the motor full load ampere rating.

HMCP 3–100 A come with line and load steel body terminals, 3T100FB. HMCP 150A come with line and load steel body terminals, 3T150FB.

Special Low Magnetic Protection Application MCP

600 Vac Maximum, 250 Vdc Maximum

Cont. Amps	Cam Setting	MCP Trip Setting ①	MCP Catalog Number
25	A	40	**HMCP025D0C**
	B	43	
	D	49	
	E	52	
	F	55	
	G	58	
	H	60	
50	A	80	**HMCP050G2C**
	B	87	
	C	93	
	D	98	
	E	103	
	F	109	
	G	115	
	H	120	
70	A	115	**HMCP070J2C**
	B	122	
	C	130	
	D	139	
	E	145	
	F	153	
	G	160	
	H	170	
100	A	160	**HMCP100L3C**
	B	174	
	C	185	
	D	196	
	E	207	
	F	218	
	G	229	
	H	240	

Notes

① For DC applications, actual trip levels are approximately 40% higher than values shown.

HMCP 25–100 A come with line and load steel body terminals, 3T100FB.

MCPs for Application with Motor Starters Equipped with Electronic Overload Relays

600 Vac Maximum, 250 Vdc Maximum

NEMA Starter Size	Cont. Amps	Cam Setting	Motor Full Load Current Amperes (FLA) ①	MCP Trip Setting ②	MCP Catalog Number
0	3	A	0.69–0.91	9	**HMCPS003A0C**
		B	0.92–1.0	12	
		C	1.1–1.2	15	
		D	1.3–1.5	18	
		E	1.6–1.7	21	
		F	1.8–1.9	24	
		G	2.0–2.2	27	
		H	2.3–2.5	30	
0	7	A	1.5–2.0	21	**HMCPS007C0C**
		B	2.1–2.5	28	
		C	2.6–3.1	35	
		D	3.2–3.6	42	
		E	3.7–3.9	49	
		F	4.3–4.7	56	
		G	4.8–5.2	63	
		H	5.3–5.7	70	
0	15	A	3.4–4.5	45	**HMCPS015E0C**
		B	4.6–5.6	60	
		C	5.7–6.8	75	
		D	6.9–7.9	90	
		E	8.0–9.1	105	
		F	9.2–10.3	120	
		G	10.4–11.4	135	
		H	11.5–12.6	150	
1	30	A	6.9–9.1	90	**HMCPS030H1C**
		B	9.2–11.4	120	
		C	11.5–13.7	150	
		D	13.8–16.0	180	
		E	16.1–18.3	210	
		F	18.4–20.6	240	
		G	20.7–22.9	270	
		H	23.0–25.2	300	
2	50	A	11.5–15.2	150	**HMCPS050K2C**
		B	15.3–19.1	200	
		C	19.2–22.9	250	
		D	23.0–26.8	300	
		E	26.9–30.6	350	
		F	30.7–34.5	400	
		G	34.6–38.3	450	
		H	38.4–42.1	500	

600 Vac Maximum, 250 Vdc Maximum, continued

NEMA Starter Size	Cont. Amps	Cam Setting	Motor Full Load Current Amperes (FLA) ①	MCP Trip Setting ②	MCP Catalog Number
3	100	A	23.0–30.6	300	**HMCPS100R3C**
		B	30.7–38.3	400	
		C	38.4–46.0	500	
		D	46.1–53.7	600	
		E	53.8–61.4	700	
		F	61.5–69.1	800	
		G	69.2–76.8	900	
		H	76.9–84.5	1000	
4	150	A	34.6–46.0	450	**HMCPS150T4C**
		B	46.1–57.5	600	
		C	57.6–69.1	750	
		D	69.2–80.6	900	
		E	80.7–92.2	1050	
		F	92.3–103.7	1200	
		G	103.8–115.2	1350	
		H	115.3–126.7	1500	
4	150	A	57.0–75.0	750	**HMCPS150U4C**
		B	76.0–95.0	1000	
		C	96.0–114.0	1250	
		D	115.0–130.7	1500	
		E	③	1750	
		F	③	2000	
		G	③	2250	
		H	③	2500	

Notes

① Motor FLA ranges are typical. The corresponding trip setting is at 13 x the minimum FLA value shown. Where a 13 x setting is required for an intermediate FLA value, alternate cam settings and/or MCP ratings should be used.

② For DC applications, actual trip levels are approximately 40% higher than values shown.

③ Settings above 130A are for special applications. NEC Article 430.110(a) requires the ampere rating of the disconnecting means to be not less than 115% of the motor full load ampere rating.

HMCP 25–100 A come with line and load steel body terminals, 3T100FB.

HMCPS 3–100 A come with line and load steel body terminals, 3T100FB. HMCPS 150A come with line and load steel body terminals, 3T150FB.

J-Frame

600 Vac Maximum, 250 Vdc Maximum

NEMA Starter Size	Cont. Amps	Cam Setting	Motor Full Load Current Amperes (FLA) ①	MCP Trip Setting ②	MCP Catalog Number ③
4	250	A	27.0–30.7	350	**HMCP250A5C**
		B	30.8–33.8	400	
		C	33.9–36.9	440	
5	250	D	37.0–40.3	480	
		E	40.4–43.8	525	
		F	43.9–46.9	570	
		G	47.0–50.7	610	
		H	47.0–50.7	660	
		I	47.0–50.7	700	
5	250	A	34.7–38.8	450	**HMCP250C5C**
		B	38.9–43.4	505	
		C	43.5–47.6	565	
		D	47.7–52.2	620	
		E	52.3–56.5	680	
		F	56.6–60.7	735	
		G	60.8–64.9	790	
		H	65.0–69.2	845	
		I	69.3–73.5	900	
5	250	A	38.5–43.4	500	**HMCP250D5C**
		B	43.5–48.0	565	
		C	48.1–53.0	625	
		D	53.1–57.6	690	
		E	57.7–62.3	750	
		F	62.4–67.3	810	
		G	67.4–71.9	875	
		H	72.0–76.9	935	
		I	77.0–81.6	1000	
5	250	A	48.1–53.8	625	**HMCP250F5C**
		B	53.9–59.9	700	
		C	60.0–66.1	780	
		D	66.2–72.3	860	
		E	72.4–78.4	940	
		F	78.5–83.8	1020	
		G	83.9–89.9	1090	
		H	90.0–96.1	1170	
		I	96.2–102.0	1250	
5	250	A	57.7–64.6	750	**HMCP250G5C**
		B	64.7–71.9	840	
		C	72.0–79.2	935	
		D	79.3–86.5	1030	
		E	86.6–93.8	1125	
		F	93.9–101.1	1220	
		G	101.2–108.4	1315	
		H	108.5–115.3	1410	
		I	115.4–122.4	1500	

600 Vac Maximum, 250 Vdc Maximum, continued

NEMA Starter Size	Cont. Amps	Cam Setting	Motor Full Load Current Amperes (FLA) ①	MCP Trip Setting ②	MCP Catalog Number ③
5	250	A	67.4–75.3	875	**HMCP250J5C**
		B	75.4–83.8	980	
		C	83.9–92.3	1090	
		D	92.4–100.7	1200	
		E	100.8–109.2	1310	
		F	109.3–117.6	1420	
		G	117.7–126.1	1530	
		H	126.2–134.6	1640	
		I	134.7–142.8	1750	
5	250	A	77.0–86.6	1000	**HMCP250K5C**
		B	86.6–96.1	1125	
		C	96.2–105.7	1250	
		D	105.8–115.3	1375	
		E	115.4–124.9	1500	
		F	125.0–134.6	1625	
		G	134.7–144.2	1750	
		H	144.3–153.8	1875	
		I	153.9–163.3	2000	
5	250	A	86.6–97.3	1125	**HMCP250L5C**
		B	97.4–108.4	1265	
		C	108.5–118.8	1410	
		D	118.9–129.9	1545	
		E	130.0–140.7	1690	
		F	140.8–151.5	1830	
		G	151.6–162.3	1970	
		H	162.4–173.0	2110	
		I	173.1–183.6	2250	
5	250	A	96.2–108.0	1250	**HMCP250W5C**
		B	108.1–119.9	1405	
		C	120.0–132.3	1560	
		D	132.4–144.2	1720	
		E	144.3–156.1	1875	
		F	156.2–168.0	2030	
		G	168.1–179.9	2185	
		H	180.0–192.3	2340	
		I	192.4–204.0	2500	

Notes

① Motor FLA ranges are typical. The corresponding trip setting is at 13 times the minimum FLA value shown. Where a 13 times setting is required for an intermediate FLA value, alternate cam settings and/or MCP ratings should be used.

② For DC applications, actual trip levels are approximately 40% higher than values shown.

③ Three-pole catalog numbers shown. Two-pole catalog numbers begin with **HM2P** in place of **HMCP**.

All HMCP and HM2P 250A come with line and load steel body terminals, T250KB. (With suffix "C," without "C" comes with TA250KB.)

K-Frame

600 Vac Maximum, 250 Vdc Maximum

NEMA Starter Size	Cont. Amps	Cam Setting	Motor Full Load Current Amperes (FLA) ①	MCP Trip Setting ②	MCP Catalog Number ③
4	400	A	27.0–30.7	350	**HMCP400A5C**
		B	30.8–33.8	400	
		C	33.9–36.9	440	
5	400	D	37.0–40.3	480	**HMCP400A5C**
		E	40.4–43.8	525	
		F	43.9–46.9	570	
		G	47.0–50.7	610	
		H	50.8–53.8	660	
		I	53.9–57.2	700	
5	400	A	38.5–43.4	500	**HMCP400D5C**
		B	43.5–48.0	565	
		C	48.1–53.0	626	
		D	53.1–57.6	690	
		E	57.7–62.3	750	
		F	62.4–67.3	810	
		G	67.4–71.9	875	
		H	72.0–76.9	935	
		I	77.0–81.6	1000	
5	400	A	48.1–53.8	625	**HMCP400F5C**
		B	53.9–59.9	700	
		C	60.0–66.1	780	
		D	66.2–72.3	860	
		E	72.4–78.4	940	
		F	78.5–83.8	1020	
		G	83.9–89.9	1090	
		H	90.0–96.1	1170	
		I	96.2–102.0	1250	
5	400	A	57.7–64.6	750	**HMCP400G5C**
		B	64.7–71.9	840	
		C	72.0–79.2	935	
		D	79.3–86.5	1030	
		E	86.6–93.8	1125	
		F	93.9–101.1	1220	
		G	101.2–108.4	1315	
		H	108.5–115.3	1410	
		I	115.4–122.4	1500	
5	400	A	67.4–75.3	875	**HMCP400J5C**
		B	75.4–83.8	980	
		C	83.9–92.3	1090	
		D	92.4–100.7	1200	
		E	100.8–109.2	1310	
		F	109.3–117.6	1420	
		G	117.7–126.1	1530	
		H	126.2–134.6	1640	
		I	134.7–142.8	1750	

600 Vac Maximum, 250 Vdc Maximum, continued

NEMA Starter Size	Cont. Amps	Cam Setting	Motor Full Load Current Amperes (FLA) ①	MCP Trip Setting ②	MCP Catalog Number ③
5	400	A	77.0–86.5	1000	**HMCP400K5C**
		B	86.6–96.1	1125	
		C	96.2–105.7	1250	
		D	105.8–115.3	1375	
		E	115.4–124.9	1500	
		F	125.0–134.6	1625	
		G	134.7–144.2	1750	
		H	144.3–153.8	1875	
		I	153.9–163.3	2000	
5	400	A	86.6–97.3	1125	**HMCP400L5C**
		B	97.4–108.4	1265	
		C	108.5–118.8	1410	
		D	118.9–129.9	1545	
		E	130.0–140.7	1690	
		F	140.8–151.5	1830	
		G	151.6–162.3	1970	
		H	162.4–173.0	2110	
		I	173.1–183.6	2250	
5	400	A	96.2–108.0	1250	**HMCP400W5C**
		B	108.1–119.9	1405	
		C	120.0–132.3	1560	
		D	132.4–144.2	1720	
		E	144.3–156.1	1875	
		F	156.2–168.0	2030	
		G	168.1–179.9	2185	
		H	180.0–192.3	2340	
		I	192.4–204.0	2500	
5	400	A	115.4–129.9	1500	**HMCP400N5C**
		B	130.0–144.2	1690	
		C	144.3–158.4	1875	
		D	158.5–173.0	2060	
		E	173.1–187.6	2250	
		F	187.7–201.9	2440	
		G	202.0–216.1	2625	
		H	216.2–230.7	2810	
		I	230.8–244.9	3000	

Notes

① Motor FLA ranges are typical. The corresponding trip setting is at 13 x the minimum FLA value shown. Where a 13 x setting is required for an intermediate FLA value, alternate cam settings and/or MCP ratings should be used.

② For DC applications, actual trip levels are approximately 40% higher than values shown.

③ Three-pole catalog numbers shown. Two-pole catalog numbers begin with **HM2P** in place of **HMCP**.

All HMCP and HM2P 400 A come with aluminum body terminals, 3TA400K. Catalog numbers with suffix "C" as shown above come with copper body terminals 3T400K.

600 Vac Maximum, 250 Vdc Maximum, continued

NEMA Starter Size	Cont. Amps	Cam Setting	Motor Full Load Current Amperes (FLA) ①	MCP Trip Setting ②	MCP Catalog Number ③
5	400	A	134.7–151.5	1750	**HMCP400R5C**
		B	151.6–168.4	1970	
		C	168.5–185.3	2190	
		D	185.4–201.9	2410	
		E	202.0–218.8	2625	
		F	218.9–235.7	2845	
		G	235.8–252.6	3065	
		H	252.7–269.2	3285	
		I	269.3–285.7	3500	
5	400	A	153.9–173.0	2000	**HMCP400X5C**
		B	173.1–192.3	2250	
		C	192.4–211.5	2500	
		D	211.6–230.7	2750	
		E	230.8–249.9	3000	
		F	250.0–269.2	3250	
		G	269.3–288.4	3500	
		H	288.5–307.6	3750	
		I	307.7–326.9	4000	
5	400	A	173.1–194.5	2250	**HMCP400Y5C**
		B	194.6–216.1	2530	
		C	216.2–237.6	2810	
		D	237.7–259.5	3090	
		E	259.6–281.1	3375	
		F	281.2–302.6	3655	
		G	302.7–324.1	3935	
		H	324.2–346.1	4215	
		I	346.2–368.1	4500	

L-Frame

600 Vac Maximum ④

NEMA Starter Size	Cont. Amps	Cam Setting	Motor Full Load Current Amperes (FLA) ①	MCP Trip Setting	MCP Catalog Number
6	600	A	138.5–184.5	1800	**HMCP600L6W**
		B	184.6–230.7	2400	
		C	230.8–276.8	3000	
		D	276.9–323.0	3600	
		E	323.1–369.1	4200	
		F	369.2–415.3	4800	
		G	415.4–461.4	5400	
		H	461.5–507.7	6000	
6	600	A	38.5–46.1	500	**HMCP600X6W**
		B	46.2–61.4	600	
		C	61.5–76.8	800	
		D	76.9–96.1	1000	
		E	96.2–115.3	1250	
		F	115.4–153.7	1500	
		G	153.8–192.2	2000	
		H	192.3–230.7	2500	
6	600	A	76.9–96.1	1000	**HMCP600Y6W**
		B	96.2–115.3	1250	
		C	115.4–153.7	1500	
		D	153.8–192.2	2000	
		E	192.3–230.7	2500	
		F	230.8–269.1	3000	
		G	269.2–307.6	3500	
		H	307.7–346.1	4000	

Notes

① Motor FLA ranges are typical. The corresponding trip setting is at 13 x the minimum FLA value shown. Where a 13 x setting is required for an intermediate FLA value, alternate cam settings and/or MCP ratings should be used.

② For DC applications, actual trip levels are approximately 40% higher than values shown.

③ Three-pole catalog numbers shown. Two-pole catalog numbers begin with **HM2P** in place of **HMCP**.

④ Equipped with electronic trip device.

All HMCP and HM2P 400 A come with aluminum body terminals, 3TA400K. Catalog numbers with suffix "C" as shown above come with copper body terminals 3T400K.

All HMCP 600 A come without terminals. For terminals, see **Page V4-T2-217.**

N-Frame

600 Vac Maximum ①

NEMA Starter Size	Cont. Amps	Cam Setting	Motor Full Load Current Amperes (FLA) ②	MCP Trip Setting	MCP Catalog Number
7	800	A	123.1–184.5	1600	**HMCP800X7W**
		B	184.6–246.1	2400	
		C	246.2–307.6	3200	
		D	307.7–369.1	4000	
		E	369.2–430.7	4800	
		F	430.8–492.2	5600	
		G	492.3–553.7	6400	
8	1200	A	184.6–276.8	2400	**HMCP12Y8W**
		B	276.9–369.1	3600	
		C	369.2–461.4	4800	
		D	461.5–553.7	6000	
		E	553.8–646.1	7200	
		F	646.2–738.4	8400	
		G	738.5–830.7	9600	

Notes

① Equipped with electronic trip device.

② Motor FLA ranges are typical. The corresponding trip setting is at 13X the minimum FLA value shown. Where a 13X setting is required for an intermediate FLA value, alternate cam settings and/or MCP ratings should be used.

Motor Protection Circuit Breakers

Contents

Description	*Page*
Product Overview	**V4-T2-116**
Standards and Certifications	**V4-T2-117**
Quick Reference	**V4-T2-118**
G-Frame (15–100 Amperes)	**V4-T2-121**
F-Frame (10–225 Amperes)	**V4-T2-135**
J-Frame (70–250 Amperes)	**V4-T2-153**
K-Frame (70–400 Amperes)	**V4-T2-161**
L-Frame (125–600 Amperes)	**V4-T2-185**
M-Frame (300–800 Amperes)	**V4-T2-211**
N-Frame (400–1200 Amperes)	**V4-T2-222**
R-Frame (800–2500 Amperes)	**V4-T2-237**
Motor Circuit Protectors (MCP)	**V4-T2-256**
Motor Protection Circuit Breakers (MPCB)	
Product Selection	**V4-T2-268**
Technical Data and Specifications	**V4-T2-268**
Type ELC Current Limiter Attachment (Size 0–4)	**V4-T2-269**
Current Limiting Circuit Breaker Module	**V4-T2-270**
Internal Accessories	**V4-T2-273**
External Accessories	**V4-T2-304**

Motor Protection Circuit Breakers (MPCB)

Product Description

Motor protection circuit breakers (MPCBs) provide UL 489 branch circuit protection, UL 508 and CSA C22.2 No. 14 motor protection, and meet IEC 60947-2 and 50947-4 requirements. Typical branch motor loads are protected by three-component starters, consisting of breaker, contactor and overload relay, or fuse, contactor and overload relay. The MPCB application-specific protection eliminates the need for motor overload relay found in the traditional three-component starter assembly. The branch motor load protection is simplified to an MPCB and contactor, reducing both space requirements and heat generation in customer panels. Protection is provided by application-specific electronic trip units.

The electronic trip unit provides typical motor overload relay functionality and short-circuit protection against potential phase-to-phase or phase-to-ground faults.

- Disconnecting means
- Branch circuit short-circuit protection
- Overload protection
  - Class 5, 10, 15 and 20
- Phase unbalance protection
  - FDMP breaker trips when there is a 40% difference between any phase compared to the calculated three-phase average
- Phase loss protection
  - Active when the maximum phase current is greater than 50% of FLA setting
  - Breaker will trip when minimum phase current is 25% or less than the maximum phase current
  - Time delay of 1 or 2 seconds before breaker trips
- Thermal memory to prevent immediate restart after overload trip to allow motor to cool down

The MPCB is based on the Series C F-Frame. Accessories for standard Series C breakers apply to the MPCB. Unlike Motor Circuit Protectors (MCPs), MPCBs are UL 489 listed with 35 kA and 65 kA interruption ratings.

Product Selection

FDMP and HFDMP

Continuous Amperes	35 kA Without Phase Unbalance, Class 10 Motor Protection Only	35 kA With Phase Unbalance and Adjustable Motor Class Protection	65 kA Without Phase Unbalance, Class 10 Motor Protection Only	65 kA With Phase Unbalance and Adjustable Motor Class Protection
80	**FDMP3080L**	**FDMP3080JL**	**HFDMP3080L**	**HFDMP3080JL**
100	**FDMP3100L**	**FDMP3100JL**	**HFDMP3100L**	**HFDMP3100JL**
160	**FDMP3160L**	**FDMP3160JL**	**HFDMP3160L**	**HFDMP3160JL**
205	**FDMP3205L**	**FDMP3205JL**	**HFDMP3205L**	**HFDMP3205JL**

FLA Ie Dial Setting

Continuous Amperes	A	B	C	D	E	F	G	H
80	40	50	60	70	80	—	—	—
100	80	—	90	—	100	—	—	—
160	100	115	130	145	160	—	—	—
205	160	170	180	195	205	—	—	—

Technical Data and Specifications

Specifications

Feature	FDMP	HFDMP
Interruption rating at 240 V	65 kA	100 kA
Interruption rating at 480 V	35 kA	65 kA
Interruption rating at 600 V	18 kA	25 kA
Icu/Ics at 240 V	65 kA/33 kA ①	100 kA/50 kA ①
Icu/Ics at 415 V	35 kA/18 kA ①	65 kA/33 kA ①
100% rated	No	No
FLA range (A)	40–205	40–205
Motor class protection	5, 10, 15, 20	5, 10, 15, 20
Phase unbalance protection (current)—active for phase current >0.5 FLA setting	□40% delta (single-phase): (three-phase avg.) for 5 seconds	□40% delta (single-phase): (three-phase avg.) for 5 seconds
Phase loss protection (current)—active for phase current >0.5 FLA setting	Min. phase □0.25 max. phase for 1 second	Min. phase □0.25 max. phase for 1 second
Thermal memory protection	Yes	Yes
High load indicator	—	—
Pre-detection relays	—	—
Internal accessories	Factory installed	Factory installed
	Aux. alarm, shunt trip, UVR	Aux. alarm, shunt trip, UVR

Notes

① IEC ratings available only on FWMP and HFWMP.

For additional breaker solutions, see **Page V4-T2-89**.

Type ELC Current Limiter Attachment

Contents

Description	Page
Product Overview	V4-T2-116
Standards and Certifications	V4-T2-117
Quick Reference	V4-T2-118
G-Frame (15–100 Amperes)	V4-T2-121
F-Frame (10–225 Amperes)	V4-T2-135
J-Frame (70–250 Amperes)	V4-T2-153
K-Frame (70–400 Amperes)	V4-T2-161
L-Frame (125–600 Amperes)	V4-T2-185
M-Frame (300–800 Amperes)	V4-T2-211
N-Frame (400–1200 Amperes)	V4-T2-222
R-Frame (800–2500 Amperes)	V4-T2-237
Motor Circuit Protectors (MCP)	V4-T2-256
Motor Protection Circuit Breakers (MPCB)	V4-T2-267
Type ELC Current Limiter Attachment (Size 0–4) Current Limiting Circuit Breaker Module	V4-T2-270
Internal Accessories	V4-T2-273
External Accessories	V4-T2-304

Type ELC Current Limiter Attachment (Size 0–4)

Product Description

Eaton's Type ELC current limiter attachment for the MCP is designed to provide increased interrupting capacity. The combination may be used for the application up to 200,000 A symmetrical at 600 Vac, making the MCP suitable for use in network distribution systems or other applications where unusually high fault currents are available. The current limiter connects to the load end of the MCP and is provided with terminals suitable for copper or aluminum conductors. (See table at right.)

Limiters are coordinated with the MCP so that normal fault currents are interrupted automatically by the MCP without any damage to the limiter. Only the rare very high fault is opened by the limiter. Faults that are interrupted by the limiter also magnetically trip the MCP, opening all three poles, preventing single-phase operation.

Each of the three poles of the Type ELC limiter is equipped with an indicator that extends when a fault is interrupted by the limiter.

Product Selection

Type ELC Current Limiter Attachment

ELC Current Limiter Attachment

MCP Rating (Amperes)	Catalog Number
3	ELC3003R
7	ELC3007R
15	ELC3015R
30	ELC3030R
50	ELC3050R
100	ELC3100R
150	ELC3150R

Technical Data and Specifications

Type ELC Current Limiter Terminal Wire Sizes ①

Type ELC Current Limiter Maximum Amperes	Wire Range AWG	Metric (mm^2)
Standard Aluminum Terminals		
50	14–2	2.5–35
100	1–4/0	50–95
150	1–4/0	50–95
Non-Standard Terminals (Steel)		
50	14–2 ②	2.5–35
100	—	—
150	—	—

Notes

① Terminal wire connectors are UL listed for standard stranded wire sizes as defined in UL 486A or UL 486B.

② Optional on special order for copper cable only.

All HMCP 800 A and 1200 A come without terminals. For terminals, see **Page V4-T2-217.**

Current Limiting Circuit Breaker Module

Contents

Description	*Page*
Product Overview	**V4-T2-116**
Standards and Certifications	**V4-T2-117**
Quick Reference	**V4-T2-118**
G-Frame (15–100 Amperes)	**V4-T2-121**
F-Frame (10–225 Amperes)	**V4-T2-135**
J-Frame (70–250 Amperes)	**V4-T2-153**
K-Frame (70–400 Amperes)	**V4-T2-161**
L-Frame (125–600 Amperes)	**V4-T2-185**
M-Frame (300–800 Amperes)	**V4-T2-211**
N-Frame (400–1200 Amperes)	**V4-T2-222**
R-Frame (800–2500 Amperes)	**V4-T2-237**
Motor Circuit Protectors (MCP)	**V4-T2-256**
Motor Protection Circuit Breakers (MPCB)	**V4-T2-267**
Type ELC Current Limiter Attachment (Size 0–4)	**V4-T2-269**
Current Limiting Circuit Breaker Module	
Product Selection	**V4-T2-271**
Technical Data and Specifications	**V4-T2-272**
Dimensions and Weights	**V4-T2-272**
Internal Accessories	**V4-T2-273**
External Accessories	**V4-T2-304**

Current Limiting Circuit Breaker Module

Product Overview

Power demand continues to grow in new and existing facilities. To meet increased demand, larger utility supplies, spot networks and large facility transformers are installed. The increased capacity of the electrical source results in increased fault currents in excess of 100 kA short-circuit protection. Eaton manufactures non-fused current limiting modules with interrupting capacities up to 200 kA at 600 Vac. Unlike fused current limiters with a one-time use, a current limiter module provides an automatic reset of the module after a short-circuit event. Resetting the molded-case circuit breaker is the only action required to restore critical power to the system; there is no time wasted with sourcing the correct replacement fuses or module to bring the system back online.

Product Description

The current limiting breaker modules use a unique contact design to enhance the system protection similar to that of the circuit breaker. When high short-circuit current is flowing through the contacts of these modules, the design results in very high interrupting capacities and improved current limiting characteristics.

Application Description

High-performance breakers are most commonly applied when very high fault levels are available and with applications where the current limiting capability is used upstream of the final load to limit current. Typical loads include lighting, power distribution, and motor control applications.

Features and Benefits

Superior system protection:

- Auto reset improves system uptime and eliminates the need for finding replacement parts
- No fuses to replace, reducing the overall cost of ownership and the waste created by fuses
- Overloads, by using inverse time current tripping characteristics of the molded-case circuit breaker
- Low-level short circuits, by using instantaneous and/or short-time delay tripping characteristics of the molded-case circuit breaker
- High-level short circuits, by using ultra-high-speed, blow-apart contacts of the current limiting module in series with the circuit breaker contacts
- Let-through currents, by improved opening speed of the contacts, the resultant rapid rise of arc voltage introduces impedance into the system

Standards and Certifications

- UL 489
- CSA C22.2

Listed

Product Selection

Series C High Performance Ratings

Type	Product	Amperes	480 Vac (UL)	600 Vac (UL)
FDC 3P thermal-magnetic	Breaker only	15–225	100	35
	With limiter	40–200	200	200

FD Frame

FD IC Rating—200 kAIC at 600 Vac ①

Ampere Rating	Breaker with Line Side Mounted Current Limiter ②	Breaker with Load Side Mounted Current Limiter ③
Thermal-Magnetic		
40	**FDC3040Q01**	**FDC3040YQ02**
45	**FDC3045Q01**	**FDC3045YQ02**
50	**FDC3050Q01**	**FDC3050YQ02**
60	**FDC3060Q01**	**FDC3060YQ02**
70	**FDC3070Q01**	**FDC3070YQ02**
80	**FDC3080Q01**	**FDC3080YQ02**
90	**FDC3090Q01**	**FDC3090YQ02**
100	**FDC3100Q01**	**FDC3100YQ02**
110	**FDC3110Q01**	**FDC3110YQ02**
125	**FDC3125Q01**	**FDC3125YQ02**
150	**FDC3150Q01**	**FDC3150YQ02**
175	**FDC3175Q01**	**FDC3175YQ02**
200	**FDC3200Q01**	**FDC3200YQ02**

Limiter Terminals

Maximum Breaker Amperes	Terminal Body Material	Wire Type	Metric Wire Range mm^2	AWG Wire Range/ Number of Conductors	Catalog Number
Standard Pressure Type Terminals					
250	Aluminum	Cu/Al	10–185	#8–350 (1)	**TA250FJ** ④

Breaker Load Terminals (For Line Mounted Limiters Only)

Maximum Breaker Amperes	Terminal Body Material	Wire Type	AWG Wire Range	Metric Wire Range mm^2	Package of Three Terminals Catalog Number
Standard Pressure Type Terminals					
100	Steel	Cu/Al	14–1/0	2.5–50	**3T100FB**
225	Aluminum	Cu/Al	4–4/0	25–95	**3TA225FD**

Notes

① Line and load terminal included.
② Two interphase barriers provided, mounted on line end of limiter, catalog number **FJ1PBK**.
③ Four interphase barriers provided, (2) line end of breaker, (2) load end of limiter.
④ Load side breaker terminations included for units configured with line mounted limiters.

Technical Data and Specifications

UL 489 Current Limiting Data

Frame	Circuit	Ip (kA)	I^2T (10^6A^2S)
LDC	240 V/200 kA	64.80	6.80
LDC	480 V/100 kA	66.90	9.33
LDC	600 V/50 kA	54.30	8.92

Dimensions and Weights

Approximate Dimensions in Inches (mm)

Assembled Breaker and Current Limiting Module

Frame	Height	Width	Depth	Weight in lbs (kg)
FD + limiter	12.06 (306.3)	4.13 (104.9)	3.39 (86.1)	8.50 (3.86)

FD-Frame With Current Limiter Module

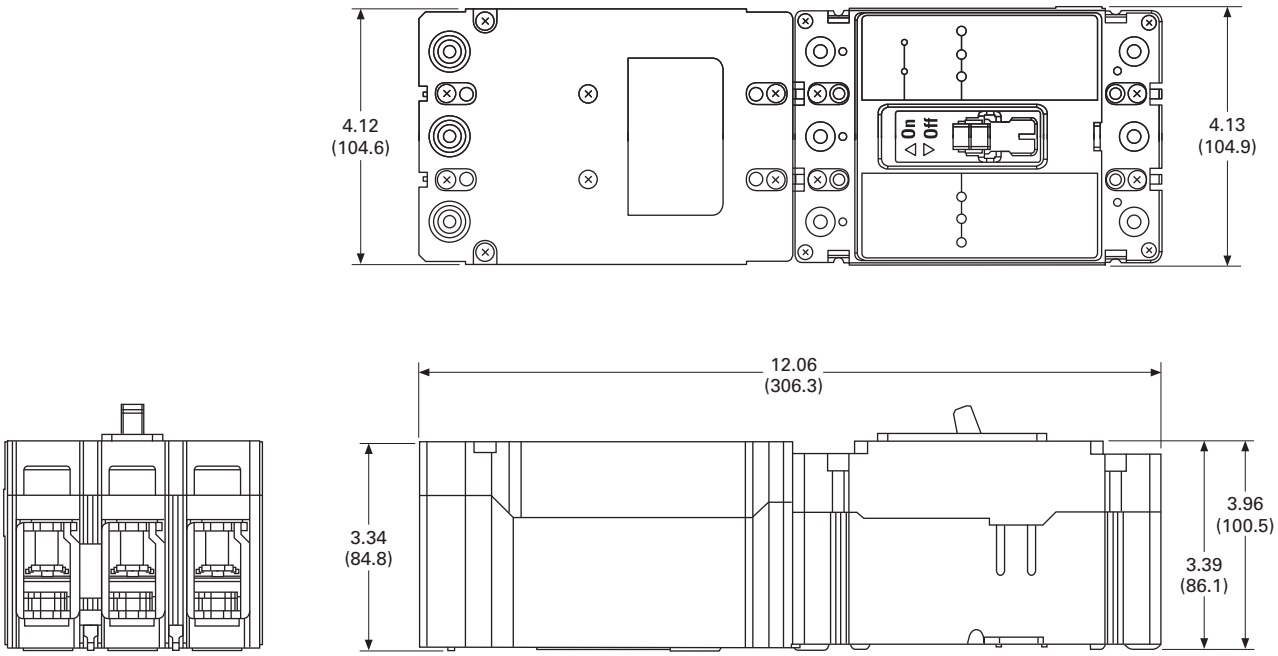

Series C Internal Accessories

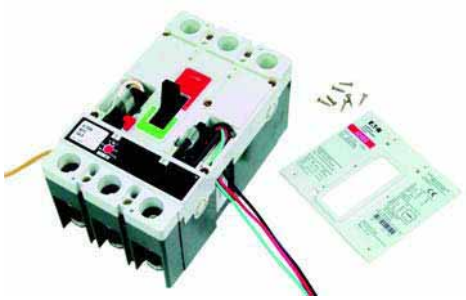

Contents

Description	*Page*
Product Overview	**V4-T2-116**
Standards and Certifications	**V4-T2-117**
Quick Reference	**V4-T2-118**
G-Frame (15–100 Amperes)	**V4-T2-121**
F-Frame (10–225 Amperes)	**V4-T2-135**
J-Frame (70–250 Amperes)	**V4-T2-153**
K-Frame (70–400 Amperes)	**V4-T2-161**
L-Frame (125–600 Amperes)	**V4-T2-185**
M-Frame (300–800 Amperes)	**V4-T2-211**
N-Frame (400–1200 Amperes)	**V4-T2-222**
R-Frame (800–2500 Amperes)	**V4-T2-237**
Motor Circuit Protectors (MCP)	**V4-T2-256**
Motor Protection Circuit Breakers (MPCB)	**V4-T2-267**
Type ELC Current Limiter Attachment (Size 0–4)	**V4-T2-269**
Current Limiting Circuit Breaker Module	**V4-T2-270**
Internal Accessories	
Product Selection	**V4-T2-275**
Technical Data and Specifications	**V4-T2-294**
External Accessories	**V4-T2-304**

Internal Accessories

Product Overview

Alarm Switch

For remote indication of automatic trip operation. Does not function with manual switching; however, it will operate when either a shunt trip or undervoltage release is operated. A "make" contact closes and a "break" contact opens when the alarm/lockout switch operates. The switch automatically resets when the circuit breaker is reset.

Auxiliary Switch

The auxiliary switch provides circuit breaker contact status information by monitoring the position of the molded cross bar that contains the moving contact arms. The auxiliary switch is used for remote indication and interlock system verification, and consists of one or two SPDT switches housed in a plug-in module. Each SPDT switch has one "a" and one "b" contact. When the circuit breaker contacts are open, the "a" contact is open and the "b" contact is closed.

Auxiliary Switch and Alarm Switch Combination

Each catalog number listed in tables on **Pages V4-T2-278** and **V4-T2-279** includes one auxiliary switch and one alarm switch. In an auxiliary switch ASL switch combination, the auxiliary switch is always mounted on the side of the plug-in module next to the center pole of the circuit breaker.

Shunt Trip

The shunt trip provides remote controlled tripping of the circuit breaker. The shunt trip consists of an intermittent rated solenoid with a tripping plunger and a cutoff switch assembled to a plug-in module. When required for ground fault protection applications, certain AC rated shunt trips, as noted in the electrical rating table, are suitable for operation at 55 percent of rated voltage.

Select shunt trip catalog number for the voltage within the indicated voltage range. Shunt trip coils are designed to be applied at specific AC or DC voltages within the voltage range shown. Electrical ratings are also shown on applicable circuit breaker accessory nameplates.

Low Energy Shunt Trip

Low energy shunt trip devices are designed to operate from low energy output signals from dedicated current sensors typically applied in ground fault protection schemes. However, with a proper control voltage source, they may be applied in place of conventional trip devices for special applications. Flux paths surrounding permanent magnets used in the shunt trip assembly hold a charged spring poised in readiness to operate the circuit breaker trip mechanism.

When a 100 microfarad capacitor charged to 28 Vdc is discharged through the shunt trip coil, the resultant flux opposes the permanent magnet flux field, which releases the stored energy in the spring to trip the circuit breaker. As the circuit breaker resets, the shunt trip reset arm is actuated by the circuit breaker handle, resetting the shunt trip. The plug-in module is mounted in retaining slots in the top of the trip unit. Coil is intermittent-rated only. Cutoff provisions required in control circuit.

Undervoltage Release Mechanism

The undervoltage release mechanism monitors a voltage (typically a line voltage) and trips the circuit breaker when the voltage falls to between 70 and 35 percent of the solenoid coil rating.

The undervoltage release mechanism consists of a continuous rated solenoid with a plunger and tripping lever mounted in a plug-in module. The tab on the tripping lever resets the undervoltage release mechanism when normal voltage has been restored and the circuit breaker handle is moved to the reset (or OFF) position. With less than pickup voltage applied to the undervoltage release mechanism, the circuit breaker contacts will not touch when a closing operation is attempted.

Note: Undervoltage release mechanism accessories are not designed for, and should not be used as, circuit interlocks.

Accessory Terminal Block (R-Frame)

(For fixed-mounted configuration.)

Internal accessory wiring leads are normally supplied with pigtail leads (18 AWG) that exit from the right side of the circuit breaker. Where specified, fixed-mounted accessory terminal blocks are available. A maximum of one 24-point terminal block can be installed on the right side of the circuit breaker for the internal accessories.

For convenience in determining the appropriate number of terminal block points required, refer to **Page V4-T2-274**.

PowerNet and Zone Interlock Kits (OPTIM 550 only) K-, L- and N-Frames

Eaton's PowerNet Communications Kit can be ordered to add PowerNet communications to an existing OPTIM 550 breaker in the field. An 18-inch (457.2 mm) wiring pigtail is routed to the rear of the breaker: two wires for PowerNet and two wires for 24 Vdc (45 mA load). It is recommended that the power supply be an "isolated high quality" unit.

Product Selection

Alarm Switch

Alarm Switch

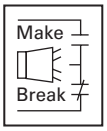

G-Frame Alarm Switch (RH Only) ①

Electrical Ratings Volts	Frequency	Amperes	Contact Arrangement	Factory Suffix	Catalog Number ②③④
Alarm Switch					
240	50/60 Hz	6	1 Make/1 Break	**B3**	**1288C75G03**
Alarm Switch Auxiliary Switches Combination					
240	50/60 Hz	6	1 Make/1 Break and 1A/1B	**B13**	**1288C76G09**

F-Frame Alarm Switch ①

Number of Contacts (Make and Break)	Mounting Location (Pole)	Factory Mounted Connection Type and Location 18-Inch (457.2 mm) Pigtail Leads Same Side Suffix Number	Rear ⑥ Suffix Number	Opposite Side Suffix Number	Terminal Block Same Side Suffix Number	Factory Installation Kit ⑤ Pigtail Leads Catalog Number	Terminal Block Catalog Number
1	Left ⑦	**B01**	**B02**	**B03**	**B04**	**A1L1LPK**	**A1L1LTK**
	Right	**B05**	**B06**	**B07**	**B08**	**A1L1RPK**	**A1L1RTK**
2	Left ⑦	**B09**	**B10**	—	**B11**	**A2L1LPK**	**A2L1LTK**
	Right	**B12**	**B13**	—	**B14**	**A2L1RPK**	**A2L1RTK**
1	Single-pole	**B15** ⑧	—	—	—	—	—

F-Frame HMCP Alarm Switch ①

Number of Contacts (Make and Break)	Mounting Location (Pole)	Factory Mounted Connection Type and Location 18-Inch (457.2 mm) Pigtail Leads Same Side Suffix Number	Rear ⑥ Suffix Number	Opposite Side Suffix Number	Terminal Block Same Side Suffix Number	Factory Installation Kit ⑤ Pigtail Leads Catalog Number	Terminal Block Catalog Number
1	Left ⑦	**B01**	**B02**	**B03**	**B04**	**MA1L1LPK**	**MA1L1LTK**
	Right	**B05**	**B06**	**B07**	**B08**	**MA1L1RPK**	**MA1L1RTK**
2	Left ⑦	**B09**	**B10**	—	**B11**	**MA2L1LPK**	**MA2L1LTK**
	Right	**B12**	**B13**	—	**B14**	**MA2L1RPK**	**MA2L1RTK**

J-Frame and HMCP (J) Alarm Switch

Number of Contacts (Make and Break)	Mounting Location (Pole)	Factory Mounted Connection Type and Location 18-Inch (457.2 mm) Pigtail Leads Same Side Suffix Number	Rear ⑦ Suffix Number	Opposite Side Suffix Number	Terminal Block Same Side Suffix Number	Field Mounted Field Installation Kits ⑨ Pigtail Leads Catalog Number	Terminal Block Catalog Number
1	Left ⑩	**B01**	**B02**	**B03**	**B04**	**A1L2LPK**	**A1L2LTK**
	Right	**B05**	**B06**	**B07**	**B08**	**A1L2RPK**	**A1L2RTK** ⑥

Notes

① F-Frame circuit breakers are factory sealed. Underwriters Laboratories requires that internal accessories be installed at the factory. Internal accessories are UL listed for factory installation under E7819. Where local codes and standards permit and UL listing is not required, internal accessories can be field installed; however, this is not recommended for FDE breakers. Accessory installation should be done before the circuit breaker is mounted and connected.
② Includes 24-inch (609.6 mm) external pigtail leads,18 AWG (16–0.010).
③ A maximum of two internal accessories may be mounted in a three-pole circuit breaker.
④ Suitable for mounting in right pole only of two- or three-pole breaker.
⑤ Not listed with Underwriters Laboratories; for field installation.
⑥ Standard pigtail lead exit location.
⑦ Standard mounting location.
⑧ Factory installation only. Leads exit load end of circuit breaker.
⑨ Listed with Underwriters Laboratories; for field installation on interchangeable trip unit breakers under E64983.
⑩ Standard mounting location—leads exit rear of breaker.

K-Frame and HMCP (K) Alarm Switch

Number of Sets of Contacts (1M and 1B)	Mounting Location (Pole)	Factory Mounted Connection Type and Location 18-Inch (457.2 mm) Pigtail Leads Same Side Suffix Number	Rear ② Suffix Number	Opposite Side Suffix Number	Terminal Block Same Side Suffix Number	Field Mounted Field Installation Kits ① Pigtail Leads Catalog Number	Terminal Block Catalog Number
1	Left ③	B01	B02	B03	B04	A1L3LPK	A1L3LTK
	Right ④	B05	B06	B07	B08	A1L3RPK	A1L3RTK
2	Left ③	B09	B10	—	B11	A2L3LPK	A2L3LTK
	Right ④	B12	B13	—	B14	A2L3RPK	A2L3RTK

L-, HMCP (L) and (M) Frames and Alarm Switch

Number of Sets of Contacts (1M and 1B)	Mounting Location (Pole)	Factory Mounted Connection Type and Location 18-Inch (457.2 mm) Pigtail Leads Same Side Suffix Number	Rear ② Suffix Number	Opposite Side Suffix Number	Terminal Block Same Side Suffix Number	Field Mounted Field Installation Kits ① Pigtail Leads Catalog Number	Terminal Block Catalog Number
1	Left ③	B01	B02	B03	B04	A1L4LPK	A1L4LTK
	Right	B05	B06	B07	B08	A1L4RPK	A1L4RTK
2	Left ③	B09	B10	—	B11	A2L4LPK	A2L4LTK
	Right	B12	B13	—	B14	A2L4RPK	A2L4RTK

N-Frame and HMCP (N) Alarm Switch

Number of Sets of Contacts (1M and 1B)	Mounting Location (Pole)	Factory Mounted Connection Type and Location 18-Inch (457.2 mm) Pigtail Leads Same Side Suffix Number	Rear ② Suffix Number	Opposite Side Suffix Number	Terminal Block Same Side Suffix Number	Field Mounted Field Installation Kits ⑤ Pigtail Leads Catalog Number	Terminal Block Catalog Number
1	Left	B01	B02	B03	B04	A1L5LPK	A1L5LTK
	Right ③	B05	B06	B07	B08	A1L5RPK	A1L5RTK
2	Left	B09	B10	—	B11	A2L5LPK	A2L5LTK
	Right ③	B12	B13	—	B14	A2L5RPK	A2L5RTK

R-Frame Alarm Switch (RH Only)

Number of Contacts (Make and Break)	Factory Mounted Connection Type and Location 18-Inch (457.2 mm) Pigtail Leads Suffix Number ⑥	Field Mounted Field Installation Kits ⑤ Pigtail Leads Catalog Number ⑥
1	B05	A1L6RPK
2	B12	A2L6RPK

Notes

① Listed with Underwriters Laboratories; for field installation on interchangeable trip unit breakers under E64983.
② Standard mounting location.
③ Standard mounting location—leads exit rear of breaker.
④ Breakers with K-Frame OPTIM 550 can only accept accessories in left pole.
⑤ Listed with Underwriters Laboratories for field installation under E64983.
⑥ A maximum of three ASL plug-in modules may be installed in a circuit breaker.

Auxiliary Switch

Auxiliary Switch

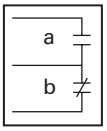

G-Frame Auxiliary Switch (RH Only)

Electrical Ratings Volts	Frequency	Amperes	Contact Arrangement	Factory Suffix	Catalog Number ①②
240	50/60 Hz	6	1a/1b	**A3**	**1288C74G03**
240	50/60 Hz	6	2a/2b	**A6**	**1288C73G03**

F-Frame and HMCP (F) Auxiliary Switch

		Factory Mounted Connection Type and Location 18-Inch (457.2 mm) Pigtail Leads				Factory Installation Kit ④	
					Terminal Block	Pigtail Leads	Terminal Block
Number of Contacts A and B	Mounting Location (Pole)	Same Side Suffix Number	Rear ③ Suffix Number	Opposite Side Suffix Number	Same Side Suffix Number	Catalog Number	Catalog Number
1	Left ⑤	**A01**	**A02**	**A03**	**A04**	**A1X1PK**	**A1X1LTK**
	Left ⑤	**A15** ⑦	**A16** ⑦	**A17** ⑦	—	**E1X1PK**	—
	Right or Neutral ⑥	**A05**	**A06**	**A07**	**A08**	**A1X1PK**	**A1X1RTK** ⑧
	Right or Neutral ⑥	**A18** ⑦	**A19** ⑦	**A20** ⑦	—	—	—
2	Left ⑤	**A09**	**A10**	—	**A11**	**A2X1LPK**	**A2X1LTK**
	Left ⑤	**A21** ⑦	**A22** ⑦	—	—	**E2X1LPK**	—
	Right or Neutral ⑥	**A12**	**A13**	—	**A14**	**A2X1RPK**	**A2X1RTK** ⑧
	Right or Neutral ⑥	**A23** ⑦	**A24** ⑦	—	—	**E2X1RPK**	—

F-Frame with Electronic Trip Unit Auxiliary Switch ⑨

		Factory Mounted Connection Type and Location 18-Inch (457.2 mm) Pigtail Leads				Factory Installation Kit ④	
					Terminal Block	Pigtail Leads	Terminal Block
Number of Contacts A and B	Mounting Location (Pole)	Same Side Suffix Number	Rear Suffix Number	Opposite Side Suffix Number	Same Side Suffix Number	Catalog Number	Catalog Number
Trip Unit Type 310+							
1	Right	**A30**	**A31**	**A32**	—	—	—
Trip Unit Type 210+							
1	Right	**A33**	**A34**	**A35**	—	—	—

J-Frame and HMCP (J) Auxiliary Switch

		Factory Mounted Connection Type and Location 18-Inch (457.2 mm) Pigtail Leads				Field Mounted Factory Installation Kit ⑩	
					Terminal Block	Pigtail Leads	Terminal Block
Number of Contacts A and B	Mounting Location (Pole)	Same Side Suffix Number	Rear ③ Suffix Number	Opposite Side Suffix Number	Same Side Suffix Number	Catalog Number	Catalog Number
1	Left	**A01**	**A02**	**A03**	**A04**	**A1X2PK**	**A1X2LTK**
	Right ⑪	**A05**	**A06**	**A07**	**A08**	**A1X2PK**	**A1X2RTK** ④
2	Left	**A09**	**A10**	—	**A11**	**A2X2PK**	**A2X2LTK**
	Right ⑪	**A12**	**A13**	—	**A14**	**A2X2PK**	**A2X2RTK** ④

Notes

① Includes 24-inch external pigtail leads, 18 AWG (16–0.010).
② A maximum of two internal accessories may be mounted in a three-pole circuit breaker. Suitable for mounting in right pole only of two- or three-pole breaker.
③ Standard pigtail lead exit location.
④ Not listed with Underwriters Laboratories; for field installation.
⑤ Pigtail wire size: 18 AWG (0.82 mm^2).
⑥ Not for use on F-Frame with electronic trip unit.
⑦ 125 volts (max.), 50/60 Hz switch for use in electronic circuit of 100 micro amperes and 15 Vdc minimum.
⑧ Not for use on four-pole circuit breakers.
⑨ Only for use on three-pole F-Frame breakers with electronic trip unit. Installation auxiliary switch for FD electronic breakers on right pole must be performed at breaker factory.
⑩ Listed with Underwriters Laboratories for field installation or interchangeable trip unit breakers under E64983.
⑪ Standard mounting location—leads exit rear of breaker.

K-Frame and HMCP (K) Auxiliary Switch

Number of Contacts A and B	Mounting Location (Pole)	Factory Mounted Connection Type and Location 18-Inch (457.2 mm) Pigtail Leads Same Side Suffix Number	Rear ② Suffix Number	Opposite Side Suffix Number	Terminal Block Same Side Suffix Number	Field Mounted Factory Installation Kit ① Pigtail Leads Catalog Number	Terminal Block Catalog Number
1	Left	A01	A02	A03	A04	A1X3PK	A1X3LTK
	Right ②③	A05	A06	A07	A08	A1X3PK	A1X3RTK ④
2	Left	A09	A10	—	A11	A2X3PK	A2X3LTK
	Right ②③	A12	A13	—	A14	A2X3PK	A2X3RTK ④
	Right	A21	A22	—	—	1482D28G10 ⑥⑦	—
3	Left	A18	—	—	A15	A3X3LPK	A3X3LTK
	Right ③	A17	—	—	A16	A3X3RPK	A3X3RTK ④

L-, HMCP (L) and (M) Frames and Auxiliary Switch

Number of Contacts A and B	Mounting Location (Pole)	Factory Mounted Connection Type and Location 18-Inch (457.2 mm) Pigtail Leads Same Side Suffix Number	Rear ② Suffix Number	Opposite Side Suffix Number	Terminal Block Same Side Suffix Number	Field Mounted Factory Installation Kit ① Pigtail Leads Catalog Number	Terminal Block Catalog Number
1	Left	A01	A02	A03	A04	A1X4PK	A1X4LTK
	Right ②	A05	A06	A07	A08	A1X4PK	A1X4RTK ④
2	Left	A09	A10	—	A11	A2X4PK	A2X4LTK
	Right ②	A12	A13	—	A14	A2X4PK	A2X4RTK ④
3	Left	A18	—	—	A15	A3X4PK	A3X4LTK
	Right ②	A17	—	—	A16	A3X4PK	A3X4RTK ④

N-Frame and HMCP (N) Auxiliary Switch

Number of Contacts A and B	Mounting Location (Pole)	Factory Mounted Connection Type and Location 18-Inch (457.2 mm) Pigtail Leads Same Side Suffix Number	Rear ② Suffix Number	Opposite Side Suffix Number	Terminal Block Same Side Suffix Number	Field Mounted Factory Installation Kit ① Pigtail Leads Catalog Number	Terminal Block Catalog Number
1	Left	A01	A02	A03	A04	A1X5PK	A1X5LTK
	Right ②	A05	A06	A07	A08	A1X5PK	A1X5RTK ④
2	Left	A09	A10	—	A11	A2X5PK	A2X5LTK
	Right ②	A12	A13	—	A14	A2X5PK	A2X5RTK ④
3	Left	A18	—	—	A15	A3X5LPK	A3X5LTK
	Right ②	A17	—	—	A16	A3X5RPK	A3X5RTK ④

R-Frame Auxiliary Switch (RH Only)

Number of Contacts A and B	Factory Mounted Connection Type and Location 18-Inch (457.2 mm) Pigtail Leads Suffix Number ⑤	Field Mounted Field Installation Kits ① Pigtail Leads Catalog Number ⑤
2	A12	A2X6RPK
4	A19	A4X6RPK

Notes

① Listed with Underwriters Laboratories for field installation under E64983.
② Standard mounting location—leads exit rear of breaker.
③ Breakers with K-Frame OPTIM 550 can only accept accessories in left pole.
④ Not for use on four-pole circuit breakers.
⑤ A maximum of two auxiliary switches (any combination of 2a/2b or 4a/4b plug-in modules may be installed in a circuit breaker.
⑥ This option is not field installable.
⑦ Available on the OPTIM 550 only. Communications are not available with this option.

Auxiliary Switch and Alarm Switch Combination

Auxiliary Switch and Alarm Switch Combination

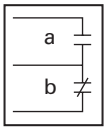

F-Frame Auxiliary Switch and Alarm Switch Combination ①

Mounting Location (Pole)	Factory Mounted Connection Type and Location 18-Inch (457 mm) Pigtail Leads Same Side Suffix Number	Rear ③ Suffix Number	Terminal Block Same Side Suffix Number	Factory Installation Kit ② Pigtail Leads Catalog Number	Terminal Block Catalog Number
Left ③	C01	C02	C03	AAL1LPK	AAL1LTK
Right	C04	C05	C06	AAL1RPK	AAL1RTK ④

F-Frame HMCP Auxiliary Switch and Alarm Switch Combination

Mounting Location (Pole)	Factory Mounted Connection Type and Location 18-Inch (457 mm) Pigtail Leads Same Side Suffix Number	Rear ③ Suffix Number	Terminal Block Same Side Suffix Number	Factory Installation Kit ② Pigtail Leads Catalog Number	Terminal Block Catalog Number
Left ④	C01	C02	C03	MAAL1LPK	MAAL1LTK
Right	C04	C05	C06	MAAL1RPK	MAAL1RPK

J-Frame and HMCP (J) Auxiliary Switch and Alarm Switch Combination

Number of Sets of Contacts (1A and 1B) (1M–1B)	Mounting Location (Pole)	Factory Mounted Connection Type and Location 18-Inch (457 mm) Pigtail Leads Same Side Suffix Number	Rear ⑥ Suffix Number	Opposite Side Suffix Number	Terminal Block Same Side Suffix Number	Field Mounted Field Installation Kits ⑤ Pigtail Leads Catalog Number	Terminal Block Catalog Number
1	Left	C01	C02	—	C03	AAL2LPK	AAL2LTK
	Right ④	C04	C05	—	C06	AAL2RPK	AAL2RTK ④

K-Frame and HMCP (K) Auxiliary Switch and Alarm Switch Combination

Number of Sets of Contacts (1A and 1B) (1M–1B)	Mounting Location (Pole)	Factory Mounted Connection Type and Location 18-Inch (457 mm) Pigtail Leads Same Side Suffix Number	Rear ⑥ Suffix Number	Opposite Side Suffix Number	Terminal Block Same Side Suffix Number	Field Mounted Field Installation Kits ⑤ Pigtail Leads Catalog Number	Terminal Block Catalog Number
1	Left	C01	C02	—	C03	AAL3LPK	AAL3LTK
	Right ⑥⑦	C04	C05	—	C06	AAL3RPK ⑧	AAL3RTK
	Right	C07	C08	—	—	1482D28G09 ⑨⑩	—

Notes

① Auxiliary switch and alarm switch combination options (Cxx) are not available on FDE 310+ with LSG or LSIG trip units due to exit wire limitations. To obtain both features, order a left mounting alarm switch (B01-B04 or B09-B11), and right mounting auxiliary switch (A30-A32).
② Not listed with Underwriters Laboratories for field installation.
③ Standard mounting location.
④ Not for use on four-pole circuit breakers
⑤ Listed with Underwriters Laboratories for field installation of interchangeable trip unit breakers under E64983.
⑥ Standard mounting location—leads exit rear of breaker.
⑦ Breakers with K-Frame OPTIM 550 can only accept accessories in left pole.
⑧ Will not install on OPTIM Trip (RH).
⑨ Available on the OPTIM 550 only. Communications are not available with this option.
⑩ This option is not field installable.

L-, HMCP (L) and (M) Frames and Auxiliary Switch and Alarm Switch Combination

Number of Sets of Contacts	Mounting Location (Pole)	Factory Mounted Connection Type and Location 18-Inch (457 mm) Pigtail Leads Same Side Suffix Number	Rear ② Suffix Number	Opposite Side Suffix Number	Terminal Block Same Side Suffix Number	Field Mounted Field Installation Kits ① Pigtail Leads Catalog Number	Terminal Block Catalog Number
1A, 1B and 1 Make/1 Break	Left	C01	C02	—	C03	AA114LPK	AA114LTK
	Right ②	C04	C05	—	C06	AA114RPK	AA114RTK ③
2A, 2B and 1 Make/1 Break	Left	C07	C08	—	C12	AA214LPK	AA214LTK
	Right ②	C10	C11	—	C13	AA214RPK	AA214RTK ③
3A, 3B and 1 Make/1 Break	Left	C14	—	—	—	AA314LPK	—
	Right ②	C15	—	—	—	AA314RPK	—

N-Frame and HMCP (N) Auxiliary Switch and Alarm Switch Combination

Number of Sets of Contacts	Mounting Location (Pole)	Factory Mounted Connection Type and Location 18-Inch (457 mm) Pigtail Leads Same Side Suffix Number	Rear ② Suffix Number	Opposite Side Suffix Number	Terminal Block Same Side Suffix Number	Field Mounted Field Installation Kits ① Pigtail Leads Catalog Number	Terminal Block Catalog Number
1A, 1B and 1 Make/1 Break	Left	C01	C02	—	C03	AA115LPK	AA115LTK
	Right ②	C04	C05	—	C06	AA115RPK	AA115RTK ③
2A, 2B and 1 Make/1 Break	Left	C07	C08	—	C12	AA215LPK	AA215LTK
	Right ②	C10	C11	—	C13	AA215RPK	AA215RTK ③

Notes

① Listed with Underwriters Laboratories for field installation under E64983.
② Standard mounting location—leads exit rear of breaker.
③ Not for use on four-pole circuit breaker.

Shunt Trip

Shunt Trip

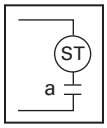

G-Frame Shunt Trip (LH Three-Pole Only)

Electrical Ratings Volts	Frequency	Amperes	Suffix Number	Catalog Number
120	50/60 Hz	1.1	**S1**	**1373D62G01**
240	50/60 Hz	2.1	**S2**	**1373D62G02**
12	DC	2.8	**S3**	**1373D62G15**
24	DC	5.7	**S4**	**1373D62G16**
24	60 Hz	—	**S7**	**1373D62G20**

F-Frame and HMCP (F) Shunt Trip

	Factory Mounted Connection Type and Location 18-Inch (457.2 mm) Pigtail Leads ②				Factory Installation Kit ①	
				Terminal Block	Pigtail Leads	Terminal Block
	Same Side	Rear ③	Opposite Side	Same Side		
Voltage Rating (AC Frequency = 50/60 Hz)	**Suffix Number**	**Suffix Number**	**Suffix Number**	**Suffix Number**	**Catalog Number**	**Catalog Number**
Left-Pole Mounting AC/DC Ratings						
12–24 Vac or Vdc	**S01**	**S02**	**S03**	**S04**	**SNT1LP03K**	**SNT1LT03K**
48–127 Vac or 48–60 Vdc ④	**S05**	**S06**	**S07**	**S08**	**SNT1LP08K**	**SNT1LT08K**
208–380 Vac or 110–127 Vdc	**S09**	**S10**	**S11**	**S12**	**SNT1LP12K**	**SNT1LT12K**
415–600 Vac or 220–250 Vdc	**S13**	**S14**	**S15**	**S16**	**SNT1LP18K**	**SNT1LT18K**
Right- or Neutral-Pole Mounting AC/DC Ratings ⑤						
12–24 Vac or Vdc	**S17**	**S18**	**S19**	**S20**	**SNT1RP03K**	**SNT1RT03K ⑥**
48–127 Vac or 48–60 Vdc ④	**S21**	**S22**	**S23**	**S24**	**SNT1RP08K**	**SNT1RT08K ⑥**
208–380 Vac or 110–127 Vdc	**S25**	**S26**	**S27**	**S28**	**SNT1RP12K**	**SNT1RT12K ⑥**
415–600 Vac or 220–250 Vdc	**S29**	**S30**	**S31**	**S32**	**SNT1RP18K**	**SNT1RT18K ⑥**

Notes

① Not listed with Underwriters Laboratories, for field installation.
② Pigtail wire size: 18 AWG (0.82 mm^2).
③ Standard pigtail lead exit location.
④ 120 Vac marked suitable for ground fault protection devices.
⑤ Standard mounting location.
⑥ Not for use on four-pole circuit breakers.

G-Frame circuit breakers are factory sealed. Underwriters Laboratories requires that internal accessories be installed at the factory.

Internal accessories are UL listed for factory installation under E7819.

Where local codes and standards permit and UL listing is not required, internal accessories can be field installed.
Accessory installation should be done before the circuit breaker is mounted and connected.

J-Frame and HMCP (J) Shunt Trip

Voltage Rating (AC Frequency = 50/60 Hz)	Factory Mounted Connection Type and Location 18-Inch (457.2 mm) Pigtail Leads Same Side Suffix Number	Rear ② Suffix Number	Opposite Side Suffix Number	Terminal Block Same Side Suffix Number	Field Mounted Field Installation Kits ① Pigtail Leads Catalog Number	Terminal Block Catalog Number
Left-Pole Mounting AC/DC Ratings ②						
12–24 Vac or Vdc	**S41**	**S42**	**S43**	**S44**	**SNT2P04K**	**SNT2T04K**
48–60 Vac or Vdc	**S49**	**S50**	**S51**	**S52**	**SNT2P06K**	**SNT2T06K**
110–240 Vac or 110–125 Vdc ③	**S09**	**S10**	**S11**	**S12**	**SNT2P11K**	**SNT2T11K**
380–440 Vac or 220–250 Vdc	**S13**	**S14**	**S15**	**S16**	**SNT2P14K**	**SNT2T14K**
480–600 Vac	**S17**	**S18**	**S19**	**S20**	**SNT2P18K**	**SNT2T18K**
Right- or Neutral-Pole Mounting AC/DC Ratings						
12–24 Vac or Vdc	**S45**	**S46**	**S47**	**S48**	**SNT2P04K**	**SNT2T04K** ④
48–60 Vac or Vdc	**S53**	**S54**	**S55**	**S56**	**SNT2P06K**	**SNT2T06K** ④
110–240 Vac or 110–125 Vdc ③	**S29**	**S30**	**S31**	**S32**	**SNT2P11K**	**SNT2T11K** ④
380–440 Vac or 220–250 Vdc	**S33**	**S34**	**S35**	**S36**	**SNT2P14K**	**SNT2T14K** ④
480–600 Vac	**S37**	**S38**	**S39**	**S40**	**SNT2P18K**	**SNT2T18K** ④

K-Frame and HMCP (K) Shunt Trip

Voltage Rating (AC Frequency = 50/60 Hz)	Factory Mounted Connection Type and Location 18-Inch (457.2 mm) Pigtail Leads Same Side Suffix Number	Rear ② Suffix Number	Opposite Side Suffix Number	Terminal Block Same Side Suffix Number	Field Mounted Field Installation Kits ① Pigtail Leads Catalog Number	Terminal Block Catalog Number
Left-Pole Mounting AC/DC Ratings ②						
12–24 Vac or Vdc	**S41**	**S42**	**S43**	**S44**	**SNT3P04K**	**SNT3T04K**
48–60 Vac or Vdc	**S49**	**S50**	**S51**	**S52**	**SNT3P06K**	**SNT3T06K**
110–240 Vac or 110–125 Vdc ③	**S09**	**S10**	**S11**	**S12**	**SNT3P11K**	**SNT3T11K**
380–440 Vac or 220–250 Vdc	**S13**	**S14**	**S15**	**S16**	**SNT3P14K**	**SNT3T14K**
480–600 Vac	**S17**	**S18**	**S19**	**S20**	**SNT3P18K**	**SNT3T18K**
Right- or Neutral-Pole Mounting AC/DC Ratings ⑤⑥						
12–24 Vac or Vdc	**S45**	**S46**	**S47**	**S48**	**SNT3P04K**	**SNT3T04K** ④
48–60 Vac or Vdc	**S53**	**S54**	**S55**	**S56**	**SNT3P06K**	**SNT3T06K** ④
110–240 Vac or 110–125 Vdc ③	**S29**	**S30**	**S31**	**S32**	**SNT3P11K**	**SNT3T11K** ④
380–440 Vac or 220–250 Vdc	**S33**	**S34**	**S35**	**S36**	**SNT3P14K**	**SNT3T14K** ④
480–600 Vac	**S37**	**S38**	**S39**	**S40**	**SNT3P18K**	**SNT3T18K** ④

Notes

① Listed with Underwriters Laboratories for field installation under E64983.
② Standard mounting location—leads exit rear of breaker.
③ Suitable for use with Class 1 ground fault sensing element.
④ Not for use on four-pole circuit breakers.
⑤ For use with KT (thermal-magnetic) trip units only.
⑥ Breakers with K-Frame OPTIM 550 can only accept accessories in left pole.

L-, HMCP (L) and (M) Frames and Shunt Trip

	Factory Mounted				Field Mounted	
	Connection Type and Location				Field Installation Kits ①	
	18-Inch (457.2 mm) Pigtail Leads			Terminal Block		
	Same Side	Rear ②	Opposite Side	Same Side	Pigtail Leads	Terminal Block
Voltage Rating (AC Frequency = 50/60 Hz)	Suffix Number	Suffix Number	Suffix Number	Suffix Number	Catalog Number	Catalog Number
Left-Pole Mounting AC/DC Ratings ②						
12–24 Vac or Vdc	**S01**	**S02**	**S03**	**S04**	**SNT4LP03K**	**SNT4LT03K**
48–60 Vac	**S05**	**S06**	**S07**	**S08**	**SNT4LP05K**	**SNT4LT05K**
48–60 Vdc	**S85**	**S86**	**S87**	—	**SNT4LP23K**	**SNT4LT23K**
110–240 Vac	**S09**	**S10**	**S11**	**S12**	**SNT4LP11K**	**SNT4LT11K**
110–125 Vdc	**S41**	**S42**	**S43**	**S44**	**SNT4LP26K**	**SNT4LT26K**
380–440 Vac or 220–250 Vdc	**S13**	**S14**	**S15**	**S16**	**SNT4LP14K**	**SNT4LT14K**
480–600 Vac	**S17**	**S18**	**S19**	**S20**	**SNT4LP18K**	**SNT4LT18K**
Right-Pole Mounting AC/DC Ratings ③						
12–24 Vac or Vdc	**S21**	**S22**	**S23**	**S24**	**SNT4RP03K**	**SNT4RT03K**
48–60 Vac	**S25**	**S26**	**S27**	**S28**	**SNT4RP05K**	**SNT4RT05K**
48–60 Vdc	**S88**	**S89**	**S90**	—	**SNT4RP23K**	**SNT4RT23K**
110–240 Vac	**S29**	**S30**	**S31**	**S32**	**SNT4RP11K**	**SNT4RT11K**
110–125 Vdc	**S45**	**S46**	**S47**	**S48**	**SNT4RP26K**	**SNT4RT26K**
380–440 Vac or 220–250 Vdc	**S33**	**S34**	**S35**	**S36**	**SNT4RP14K**	**SNT4RT14K**
480–600 Vac	**S37**	**S38**	**S39**	**S40**	**SNT4RP18K**	**SNT4RT18K**

Notes

① Listed with Underwriters Laboratories, for field installation under E64983.
② Standard mounting location—leads exit rear of breaker.
③ For use with LT (thermal-magnetic) three-pole trip units only.

N-Frame and HMCP (N) Shunt Trip

Voltage Rating (AC Frequency = 50/60 Hz)	Factory Mounted Connection Type and Location 18-Inch (457.2 mm) Pigtail Leads Same Side Suffix Number	Rear ② Suffix Number	Opposite Side Suffix Number	Terminal Block Same Side Suffix Number	Field Mounted Field Installation Kits ① Pigtail Leads Catalog Number	Terminal Block Catalog Number
Left-Pole Mounting AC/DC Ratings ②						
9–24 Vac or Vdc	**S01**	**S02**	**S03**	**S04**	**SNT5LP03K**	**SNT5LT03K**
48–60 Vac	**S05**	**S06**	**S07**	**S08**	**SNT5LP05K**	**SNT5LT05K**
110–240 Vac ③	**S09**	**S10**	**S11**	**S12**	**SNT5LP11K**	**SNT5LT11K**
110–125 Vdc	**S41**	**S42**	**S43**	**S44**	**SNT5LP26K**	**SNT5LT26K**
380–440 Vac or 220–250 Vdc	**S13**	**S14**	**S15**	**S16**	**SNT5LP14K**	**SNT5LT14K**
480–600 Vac	**S17**	**S18**	**S19**	**S20**	**SNT5LP18K**	**SNT5LT18K**
48–60 Vdc	**S21**	**S22**	**S23**	**S24**	**SNT5LP23K**	**SNT5LT23K**

R-Frame Shunt Trip (RH Only)

Voltage Rating (AC Frequency = 50/60 Hz)	Factory Mounted Connection Type and Location 18-Inch (457.2 mm) Pigtail Leads Suffix Number ④	Field Mounted Field Installation Kits ① Pigtail Leads Catalog Number ④
24 Vac or Vdc	**S21**	**SNT6P03K**
48–60 Vac	**S25**	**SNT6P05K**
110–240 Vac	**S29**	**SNT6P11K**
380–440 Vac or 220–250 Vdc	**S33**	**SNT6P14K**
480–600 Vac	**S37**	**SNT6P18K**
48–60 Vdc	**S88**	**SNT6P23K**
110–125 Vdc	**S45**	**SNT6P26K**

Notes

① Listed with Underwriters Laboratories for field installation under E64983.
② Standard mounting location—leads exit rear of breaker.
③ Supply voltages suitable for use with Class 1 GFP devices. Marking label included with accessory kits.
④ A maximum of two shunt trip plug-in modules may be installed in a circuit breaker.

Low Energy Shunt Trip
Ordering Information

Select shunt trip catalog number for the voltage within the indicated voltage range. Shunt trip coils are designed to be applied at specific AC or DC voltages within the voltage range shown. Electrical ratings are also shown on applicable circuit breaker accessory nameplates.

Low Energy Shunt Trip

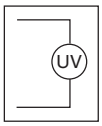

F-, J-, K-, L-, M-, N- and R-Frames and HMCPs Low Energy Shunt Trip ①

	Factory Mounted				Field Mounted	
	Connection Type and Location				Field Installation Kits ②	
	18-Inch (457.2 mm) Pigtail Leads			Terminal Block		
Mounting Positions (Pole)	Same Side Suffix Number	Rear ③ Suffix Number	Opposite Side Suffix Number	Same Side Suffix Number	Pigtail Leads Catalog Number	Terminal Block Catalog Number
F-Frame						
Left	N01	N02	N03	N04	LST1LPK ④	LST1LTK ④
Right ③	N05	N06	N07	N08	LST1RPK ④	LST1RTK ④
J-Frame						
Left	N01	N02	N03	—	LST2LPK	—
Right ③	N05	N06	N07	—	LST2RPK	—
K-Frame						
Left ③	N01	N02	N03	—	LST3LPK	—
Right ⑤⑥	N05	N06	N07	—	LST3RPK	—
L- and M-Frames						
Left	N01	N02	N03	—	LST4LPK	—
Right	N05	N06	N07	—	LST4RPK	—
N-Frame						
Left ③	N01	N02	N03	—	LST5LPK	—
R-Frame						
Right	N01	—	—	—	LST6RPK	—

Notes

① Cutoff provisions required in control circuit.
② Listed with Underwriters Laboratories for field installation under E64983.
③ Standard mounting location—leads exit rear of breaker.
④ For F-Frame HMCP, add an "M" to beginning of catalog number. Field Installation Kit referenced for factory use only, not UL listed for field installation.
⑤ For use with thermal-magnetic trip units only.
⑥ Breakers with K-Frame OPTIM 550 can only accept accessories in left pole.

Undervoltage Release Mechanism
Ordering Information

Select handle reset undervoltage release mechanism catalog number for the voltage within the indicated voltage range. Undervoltage release mechanism coils are designed to be applied at specific AC or DC voltages within the voltage range shown on applicable circuit breaker accessory nameplates.

Undervoltage Release Mechanism

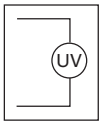

G-Frame Undervoltage Release Mechanism (LH Three-Pole Only)

Electrical Ratings Volts (AC Only)	Frequency (Hz)	Amperes	Style Numbers ①②③	Factory Suffix
120	50/60	0.05	**1373D62G03**	**T1**
24	50/60	0.22	**1373D62G04**	**T2**
48	50/60	0.11	**1373D62G05**	**T3**
60	50/60	0.10	**1373D62G06**	**T4**
110	50	0.049	**1373D62G07**	**T5**
208	60	0.026	**1373D62G08**	**T6**
220	50	0.025	**1373D62G09**	**T7**
240	50/60	0.024	**1373D62G10**	**T8**
380	50	0.015	**1373D62G11**	**T9**
415	50	0.013	**1373D62G12**	**T10**
440	50	0.012	**1373D62G13**	**T11**
480	60	0.01	**1373D62G14**	**T12**

Notes

① Includes 24-inch (609.6 mm) external pigtail leads, 18 AWG (16–0.010).

② A maximum of two internal accessories may be mounted in a three-pole circuit breaker.

③ Suitable for mounting in left pole only of three-pole breaker.

G-Frame circuit breakers are factory sealed. Underwriters Laboratories requires that internal accessories be installed at the factory.

Internal accessories are UL listed for factory installation under E7819.

Where local codes and standards permit and UL listing is not required, internal accessories can be field installed. Accessory installation should be done before the circuit breaker is mounted and connected.

F-Frame Factory Mounted (For F-Frame Breaker and F-Frame HMCP) Undervoltage Release Mechanism

	Connection Type and Location			
	18-Inch Pigtail Leads			Terminal Block
	Same Side	Rear ①	Opposite Side	Same Side
Voltage Rating (AC Freq. = 50/60 Hz)	Suffix Number	Suffix Number	Suffix Number	Suffix Number
Left-Pole Mounting AC Ratings				
12 Vac	**U01**	**U02**	**U03**	**U04**
24 Vac	**U05**	**U06**	**U07**	**U08**
48 Vac	**U37**	**U38**	**U39**	**U40**
60 Vac	**U97**	**U98**	**U99**	**U100**
110–127 Vac	**U13**	**U14**	**U15**	**U16**
208–240 Vac	**U17**	**U18**	**U19**	**U20**
380–480 Vac	**U21**	**U22**	**U23**	**U24**
525–600 Vac	**U25**	**U26**	**U27**	**U28**
Right-Pole Mounting AC Ratings ②③				
12 Vac	**U49**	**U50**	**U51**	**U52**
24 Vac	**U53**	**U54**	**U55**	**U56**
48 Vac	**U85**	**U86**	**U87**	**U88**
60 Vac	**U101**	**U102**	**U103**	**U104**
110–127 Vac	**U61**	**U62**	**U63**	**U64**
208–240 Vac	**U65**	**U66**	**U67**	**U68**
380–480 Vac	**U69**	**U70**	**U71**	**U72**
525–600 Vac	**U73**	**U74**	**U75**	**U76**
Left-Pole Mounting DC Ratings				
12 Vdc	**U29**	**U30**	**U31**	**U32**
24 Vdc	**U33**	**U34**	**U35**	**U36**
48 Vdc	**U37**	**U38**	**U39**	**U40**
60 Vdc	**U97**	**U98**	**U99**	**U100**
110–127 Vdc	**U41**	**U42**	**U43**	**U44**
220–250 Vdc	**U45**	**U46**	**U47**	**U48**
Right-Pole Mounting DC Ratings ②③				
12 Vdc	**U77**	**U78**	**U79**	**U80**
24 Vdc	**U81**	**U82**	**U83**	**U84**
48 Vdc	**U85**	**U86**	**U87**	**U88**
60 Vdc	**U101**	**U102**	**U103**	**U104**
110–127 Vdc	**U89**	**U90**	**U91**	**U92**
220–250 Vdc	**U93**	**U94**	**U95**	**U96**

Notes

① Standard pigtail lead exit location.
② Standard mounting location.
③ Not for use on right pole of four-pole circuit breaker.

F-Frame circuit breakers are factory sealed. Underwriters Laboratories requires that internal accessories be installed at the factory.

Internal accessories are UL listed for factory installation under E7819.

Where local codes and standards permit and UL listing is not required, internal accessories can be field installed. Accessory installation should be done before the circuit breaker is mounted and connected.

F-Frame Field Mounted Undervoltage Release Mechanism

Voltage Rating (AC Freq. = 50/60 Hz)	F-Frame Breaker Factory Installation Kits ① Pigtail Leads Catalog Number	F-Frame Breaker Factory Installation Kits ① Terminal Block Catalog Number	F-Frame Breaker HMCP Pigtail Leads Catalog Number	F-Frame Breaker HMCP Terminal Block Catalog Number
Left-Pole Mounting AC Ratings				
12 Vac	**UVH1LP02K**	**UVH1LT02K**	**MUVH1LP02K**	**MUVH1LT02K**
24 Vac	**UVH1LP03K**	**UVH1LT03K**	**MUVH1LP03K**	**MUVH1LT03K**
48 Vac	**UVH1LP22K**	**UVH1LT22K**	**MUVH1LP22K**	**MUVH1LT22K**
60 Vac	**UVH1LP24K**	**UVH1LT24K**	**MUVH1LP24K**	**MUVH1LT24K**
110–127 Vac	**UVH1LP08K**	**UVH1LT08K**	**MUVH1LP08K**	**MUVH1LT08K**
208–240 Vac	**UVH1LP11K**	**UVH1LT11K**	**MUVH1LP11K**	**MUVH1LT11K**
380–480 Vac	**UVH1LP15K**	**UVH1LT15K**	**MUVH1LP15K**	**MUVH1LT15K**
525–600 Vac	**UVH1LP18K**	**UVH1LT18K**	**MUVH1LP18K**	**MUVH1LT18K**
Right-Pole Mounting AC Ratings ②③				
12 Vac	**UVH1RP02K**	**UVH1RT02K**	**MUVH1RP02K**	**MUVH1RT02K**
24 Vac	**UVH1RP03K**	**UVH1RT03K**	**MUVH1RP03K**	**MUVH1RT03K**
48 Vac	**UVH1RP22K**	**UVH1RT22K**	**MUVH1RP22K**	**MUVH1RT22K**
60 Vac	**UVH1RP24K**	**UVH1RT24K**	**MUVH1RP24K**	**MUVH1RT24K**
110–127 Vac	**UVH1RP08K**	**UVH1RT08K**	**MUVH1RP08K**	**MUVH1RT08K**
208–240 Vac	**UVH1RP11K**	**UVH1RT11K**	**MUVH1RP11K**	**MUVH1RT11K**
380–480 Vac	**UVH1RP15K**	**UVH1RT15K**	**MUVH1RP15K**	**MUVH1RT15K**
525–600 Vac	**UVH1RP18K**	**UVH1RT18K**	**MUVH1RP18K**	**MUVH1RT18K**
Left-Pole Mounting DC Ratings				
12 Vdc	**UVH1LP20K**	**UVH1LT20K**	**MUVH1LP20K**	**MUVH1LT20K**
24 Vdc	**UVH1LP21K**	**UVH1LT21K**	**MUVH1LP21K**	**MUVH1LT21K**
48 Vdc	**UVH1LP22K**	**UVH1LT22K**	**MUVH1LP22K**	**MUVH1LT22K**
60 Vdc	**UVH1LP24K**	**UVH1LT24K**	**MUVH1LP24K**	**MUVH1LT24K**
110–127 Vdc	**UVH1LP26K**	**UVH1LT26K**	**MUVH1LP26K**	**MUVH1LT26K**
220–250 Vdc	**UVH1LP28K**	**UVH1LT28K**	**MUVH1LP28K**	**MUVH1LT28K**
Right-Pole Mounting DC Ratings ②③				
12 Vdc	**UVH1RP20K**	**UVH1RT20K**	**MUVH1RP20K**	**MUVH1RT20K**
24 Vdc	**UVH1RP21K**	**UVH1RT21K**	**MUVH1RP21K**	**MUVH1RT21K**
48 Vdc	**UVH1RP22K**	**UVH1RT22K**	**MUVH1RP22K**	**MUVH1RT22K**
60 Vdc	**UVH1RP22K**	**UVH1RT22K**	**MUVH1RP22K**	**MUVH1RT22K**
110–127 Vdc	**UVH1RP26K**	**UVH1RT26K**	**MUVH1RP26K**	**MUVH1RT26K**
220–250 Vdc	**UVH1RP28K**	**UVH1RT28K**	**MUVH1RP28K**	**MUVH1RT28K**

Notes

① Not listed with Underwriters Laboratories, for field installation.
② Standard mounting location.
③ Not for use on right pole of four-pole circuit breaker.

J-Frame and HMCP (J) Undervoltage Release Mechanism

	Factory Mounted Connection Type and Location				Field Mounted Field Installation Kits ②	
	18-Inch (457.2 mm) Pigtail Leads			Terminal Block ①		
	Same Side	Rear ②	Opposite Side	Same Side	Pigtail Leads	Terminal Block ③
Voltage Rating (AC Freq. = 50/60 Hz)	Suffix Number	Suffix Number	Suffix Number	Suffix Number	Catalog Number	Catalog Number
Left-Pole Mounting AC Ratings ④						
12 Vac	U05	U06	U07	U08	UVH2LP02K	UVH2LT02K
24 Vac	U09	U10	U11	U12	UVH2LP03K	UVH2LT03K
48–60 Vac	U13	U14	U15	U16	UVH2LP05K	UVH2LT05K
110–127 Vac	U17	U18	U19	U20	UVH2LP08K	UVH2LT08K
208–240 Vac	U21	U22	U23	U24	UVH2LP11K	UVH2LT11K
380–480 Vac	U25	U26	U27	U28	UVH2LP15K	UVH2LT15K
Right-Pole Mounting AC Ratings ③						
12 Vac	U37	U38	U39	U40	UVH2RP02K	UVH2RT02K
24 Vac	U41	U42	U43	U44	UVH2RP03K	UVH2RT03K
48–60 Vac	U45	U46	U47	U48	UVH2RP05K	UVH2RT05K
110–127 Vac	U49	U50	U51	U52	UVH2RP08K	UVH2RT08K
208–240 Vac	U53	U54	U55	U56	UVH2RP11K	UVH2RT11K
380–480 Vac	U57	U58	U59	U60	UVH2RP15K	UVH2RT15K
Left-Pole Mounting DC Ratings ④						
12 Vdc	T01	T02	T03	T04	UVH2LP20K	UVH2LT20K
24 Vdc	T05	T06	T07	T08	UVH2LP21K	UVH2LT21K
48–60 Vdc	T09	T10	T11	T12	UVH2LP23K	UVH2LT23K
110–127 Vdc	T13	T14	T15	T16	UVH2LP26K	UVH2LT26K
220–250 Vdc	T17	T18	T19	T20	UVH2LP28K	UVH2LT28K
Right-Pole Mounting DC Ratings ③						
12 Vdc	T21	T22	T23	T24	UVH2RP20K	UVH2RT20K
24 Vdc	T25	T26	T27	T28	UVH2RP21K	UVH2RT21K
48–60 Vdc	T29	T30	T31	T32	UVH2RP23K	UVH2RT23K
110–127 Vdc	T33	T34	T35	T36	UVH2RP26K	UVH2RT26K
220–250 Vdc	T37	T38	T39	T40	UVH2RP28K	UVH2RT28K

Notes

① For electrical rating data for manual, automatic and electrical reset undervoltage release mechanisms, refer to Eaton.
② Listed with Underwriters Laboratories for field installation under E64983.
③ Not for use on right pole of four-pole circuit breakers.
④ Standard mounting location—leads exit rear of breaker.

K-Frame and HMCP (K) Undervoltage Release Mechanism

	Factory Mounted Connection Type and Location				Field Mounted Field Installation Kits ①	
	18-Inch (457.2 mm) Pigtail Leads			Terminal Block		
	Same Side	Rear ②	Opposite Side	Same Side	Pigtail Leads	Terminal Block
Voltage Rating (AC Freq. = 50/60 Hz)	Suffix Number	Suffix Number	Suffix Number	Suffix Number	Catalog Number	Catalog Number
Left-Pole Mounting AC Ratings ②						
12 Vac	U05	U06	U07	U08	UVH3LP02K	UVH3LT02K
24 Vac	U09	U10	U11	U12	UVH3LP03K	UVH3LT03K
48–60 Vac	U13	U14	U15	U16	UVH3LP05K	UVH3LT05K
110–127 Vac	U17	U18	U19	U20	UVH3LP08K	UVH3LT08K
208–240 Vac	U21	U22	U23	U24	UVH3LP11K	UVH3LT11K
380–480 Vac	U25	U26	U27	U28	UVH3LP15K	UVH3LT15K
Right-Pole Mounting AC Ratings ③④⑤						
12 Vac	U37	U38	U39	U40	UVH3RP02K	UVH3RT02K
24 Vac	U41	U42	U43	U44	UVH3RP03K	UVH3RT03K
48–60 Vac	U45	U46	U47	U48	UVH3RP05K	UVH3RT05K
110–127 Vac	U49	U50	U51	U52	UVH3RP08K	UVH3RT08K
208–240 Vac	U53	U54	U55	U56	UVH3RP11K	UVH3RT11K
380–480 Vac	U57	U58	U59	U60	UVH3RP15K	UVH3RT15K
Left-Pole Mounting DC Ratings ②						
12 Vdc	T01	T02	T03	T04	UVH3LP20K	UVH3LT20K
24 Vdc	T05	T06	T07	T08	UVH3LP21K	UVH3LT21K
48–60 Vdc	T09	T10	T11	T12	UVH3LP23K	UVH3LT23K
110–127 Vdc	T13	T14	T15	T16	UVH3LP26K	UVH3LT26K
220–250 Vdc	T17	T18	T19	T20	UVH3LP28K	UVH3LT28K
Right-Pole Mounting DC Ratings ③④⑤						
12 Vdc	T21	T22	T23	T24	UVH3RP20K	UVH3RT20K
24 Vdc	T25	T26	T27	T28	UVH3RP21K	UVH3RT21K
48–60 Vdc	T29	T30	T31	T32	UVH3RP23K	UVH3RT23K
110–127 Vdc	T33	T34	T35	T36	UVH3RP26K	UVH3RT26K
220–250 Vdc	T37	T38	T39	T40	UVH3RP28K	UVH3RT28K

Notes

① Listed with Underwriters Laboratories, for field installation under E64983.
② Standard mounting location—leads exit rear of breaker.
③ For use with KT (thermal-magnetic) trip units only.
④ Not for use on right pole of four-pole circuit breaker.
⑤ Breakers with K-Frame OPTIM 550 can only accept accessories in left pole.

L-, HMCP (L) and (M)-Frames and Undervoltage Release Mechanism

	Factory Mounted				Field Mounted	
	Connection Type and Location				Field Installation Kits ①	
	18-Inch (457.2 mm) Pigtail Leads			Terminal Block		
	Same Side	Rear ②	Opposite Side	Same Side	Pigtail Leads	Terminal Block
Voltage Rating (AC Freq. = 50/60 Hz)	Suffix Number	Suffix Number	Suffix Number	Suffix Number	Catalog Number	Catalog Number
Left-Pole Mounting AC Ratings ②						
12 Vac	U05	U06	U07	U08	UVH4LP02K	UVH4LT02K
24 Vac	U09	U10	U11	U12	UVH4LP03K	UVH4LT03K
48–60 Vac	U13	U14	U15	U16	UVH4LP05K	UVH4LT05K
110–127 Vac	U17	U18	U19	U20	UVH4LP08K	UVH4LT08K
208–240 Vac	U21	U22	U23	U24	UVH4LP11K	UVH4LT11K
380–480 Vac	U25	U26	U27	U28	UVH4LP15K	UVH4LT15K
Right-Pole Mounting AC Ratings ③④						
12 Vac	U37	U38	U39	U40	UVH4RP02K	UVH4RT02K
24 Vac	U41	U42	U43	U44	UVH4RP03K	UVH4RT03K
48–60 Vac	U45	U46	U47	U48	UVH4RP05K	UVH4RT05K
110–127 Vac	U49	U50	U51	U52	UVH4RP08K	UVH4RT08K
208–240 Vac	U53	U54	U55	U56	UVH4RP11K	UVH4RT11K
380–480 Vac	U57	U58	U59	U60	UVH4RP15K	UVH4RT15K
Left-Pole Mounting DC Ratings ②						
12 Vdc	T01	T02	T03	T04	UVH4LP20K	UVH4LT20K
24 Vdc	T05	T06	T07	T08	UVH4LP21K	UVH4LT21K
48–60 Vdc	T09	T10	T11	T12	UVH4LP23K	UVH4LT23K
110–127 Vdc	T13	T14	T15	T16	UVH4LP26K	UVH4LT26K
220–250 Vdc	T17	T18	T19	T20	UVH4LP28K	UVH4LT28K
Right-Pole Mounting DC Ratings ③④						
12 Vdc	T21	T22	T23	T24	UVH4RP20K	UVH4RT20K
24 Vdc	T25	T26	T27	T28	UVH4RP21K	UVH4RT21K
48–60 Vdc	T29	T30	T31	T32	UVH4RP23K	UVH4RT23K
110–127 Vdc	T33	T34	T35	T36	UVH4RP26K	UVH4RT26K
220–250 Vdc	T37	T38	T39	T40	UVH4RP28K	UVH4RT28K

Notes

① Listed with Underwriters Laboratories for field installation under E64983.
② Standard mounting location—leads exit rear of breaker.
③ For use with LT (thermal-magnetic) trip units only.
④ Not for use on right pole of four-pole circuit breaker.

N-Frame and HMCP (N) Undervoltage Release Mechanism

	Factory Mounted				Field Mounted	
	Connection Type and Location				Field Installation Kits ①	
	18-Inch (457.2 mm) Pigtail Leads			Terminal Block		
	Same Side	Rear ②	Opposite Side	Same Side	Pigtail Leads	Terminal Block
Voltage Rating (AC Freq. = 50/60 Hz)	Suffix Number	Suffix Number	Suffix Number	Suffix Number	Catalog Number	Catalog Number
Left-Pole Mounting AC Ratings ②						
12 Vac	U05	U06	U07	U08	UVH5LP02K	UVH5LT02K
24 Vac	U09	U10	U11	U12	UVH5LP03K	UVH5LT03K
48–60 Vac	U13	U14	U15	U16	UVH5LP05K	UVH5LT05K
110–127 Vac	U17	U18	U19	U20	UVH5LP08K	UVH5LT08K
208–240 Vac	U21	U22	U23	U24	UVH5LP11K	UVH5LT11K
380–480 Vac	U25	U26	U27	U28	UVH5LP29K	UVH5LT29K
Left-Pole Mounting DC Ratings ②						
12 Vdc	T01	T02	T03	T04	UVH5LP20K	UVH5LT20K
24 Vdc	T05	T06	T07	T08	UVH5LP21K	UVH5LT21K
48–60 Vdc	T09	T10	T11	T12	UVH5LP23K	UVH5LT23K
110–127 Vdc	T13	T14	T15	T16	UVH5LP26K	UVH5LT26K
220–250 Vdc	T17	T18	T19	T20	UVH5LP28K	UVH5LT28K

R-Frame Undervoltage Release Mechanism (RH only)

	Factory Mounted	Field Mounted
	Connection Type and Location	Field Installation Kits ③
	18-Inch (457.2 mm) Pigtail Leads	Pigtail Leads
Voltage Rating (AC Frequency = 50/60 Hz)	Suffix Number ④	Catalog Number ④
12 Vac	U37	UVH6RP02K
24 Vac	U41	UVH6RP03K
48–60 Vac	U45	UVH6RP05K
110–127 Vac	U49	UVH6RP08K
208–240 Vac	U53	UVH6RP11K
380–500 Vac	U57	UVH6RP29K
12 Vdc	T21	UVH6RP20K
24 Vdc	T25	UVH6RP21K
48–60 Vdc	T29	UVH6RP23K
110–125 Vdc	T33	UVH6RP26K
220–250 Vdc	T37	UVH6RP28K

Notes

① Listed with Underwriters Laboratories for field installation under E64983.
② Standard mounting location—leads exit rear of breaker.
③ Endurance: 500 electrical operations plus 2500 mechanical operations.
④ Pigtail wire size: 18 AWG (0.82 mm^2). Leads are orange and brown.

Accessory Terminal Block (R-Frame)

Accessory Terminal Block (R-Frame)

R-Frame Accessory Terminal Block ①

Factory Installed Suffix Number	Field Mounted Catalog Number
Q01	TBRDK

Number of Control Wires for Each Internally Mounted Accessory

Type of Accessory	Number of Contacts per Single Accessory	Required Number of Wires
Auxiliary switch	2a/2b 4a/4b	6 12
Alarm (Signal)/ Lockout switch	1m/1b 2m/2b	6 12
Shunt trip	N/A	2
Low energy shunt	N/A	2
Undervoltage release mechanism	N/A	2

PowerNet and Zone Interlock Kits (OPTIM 550 Only)
K-, L- and N-Frames

PowerNet and Zone Interlock Kits

PowerNet Interlock Kit ②

Circuit Breaker	Factory Install Suffix	Catalog Number
K-Frame	PN	ICK550K
L-Frame	PN	ICK550L
N-Frame	PN	ICK550N

Zone Interlock/Ground Kit ②③

Circuit Breaker	Factory Install Suffix	Catalog Number
K-Frame	ZG	ZGK550K
L-Frame	ZG	ZGK550L
N-Frame	ZG	ZGK550N

PowerNet and Zone Interlock/Ground Kit ②③

Circuit Breaker	Factory Install Suffix	Catalog Number
K-Frame	ZGP	ZGPK550K
L-Frame	ZGP	ZGPK550L
N-Frame	ZGP	ZGPK550N

Notes

① One 24-point accessory terminal block provided with circuit breaker when ordered factory installed or shipped from warehouse as separate item when ordered for field installation. See Digitrip RMS master connection diagram (IL 29C714).

② Installation of these kits restrict any other attachments from being installed in the RH pole.

③ Includes a ground fault alarm signal that can drive the ground fault alarm unit (catalog number GFAU).

Technical Data and Specifications

Alarm Switch

F-Frame Electrical Rating Data ①②

Maximum Voltage	Frequency	Maximum Current Amperes	Dielectric Withstand Voltage
Multi-Pole Circuit Breakers			
600	50/60 Hz	6	2500
125	DC	0.50 ③	2500
250	DC	0.25 ③	2500
Single-Pole Circuit Breakers			
125/250	50/60 Hz	6 ③	2000
28	DC	3 ③	2000
28	DC	5 ④	2000

J-Frame Electrical Rating Data ⑤⑥

Maximum Voltage	Frequency	Maximum Current Amperes	Dielectric Withstand Voltage
600	50/60 Hz	6	2500
125	DC	0.50 ③	2500
250	DC	0.25 ③	2500

K-Frame Electrical Rating Data ⑥⑦

Maximum Voltage	Frequency	Maximum Current Amperes	Dielectric Withstand Voltage
600	50/60 Hz	6	2500
125	DC	0.50 ③	2500
250	DC	0.25 ③	2500

L- and M-Frames Electrical Rating Data ⑥⑦

Maximum Voltage	Frequency	Maximum Current Amperes	Dielectric Withstand Voltage
600	50/60 Hz	6	2500
125	DC	0.50 ③	2500
250	DC	0.25 ③	2500

N-Frame Electrical Rating Data ⑧

Maximum Voltage	Frequency	Maximum Current Amperes	Dielectric Withstand Voltage
600	50/60 Hz	6	2500
125	DC	0.50 ③	2500
250	DC	0.25 ③	2500

R-Frame Electrical Rating Data ⑨⑩

Maximum Voltage	Frequency	Maximum Current Amperes	Dielectric Withstand Voltage
600	50/60 Hz	6	2500
125	DC	0.50 ③	2500
250	DC	0.25 ③	2500

Notes

① Endurance: 6000 electrical operations plus 4000 mechanical operations.
② Endurance: 6000 electrical operations plus 2000 mechanical operations.
③ Non-inductive load.
④ Inductive (L/R = 0.026).
⑤ Endurance: 6000 electrical operations plus 2000 mechanical operations.
⑥ Pigtail wire size: 18 AWG (0.82 mm^2).
⑦ Endurance: 5000 electrical operations plus 1000 mechanical operations.
⑧ Endurance: 3000 electrical operations plus 1000 mechanical operations.
⑨ Endurance: 500 electrical operations plus 2500 mechanical operations.
⑩ Pigtail wire size: 18 AWG (0.82 mm^2). Leads are red, black and blue.

Auxiliary Switch

F-Frame Electrical Rating Data ①②

Maximum Voltage	Frequency	Maximum Current Amperes	Dielectric Withstand Voltage
125 ③	50/60 Hz	1	2500
600	50/60 Hz	6	2500
125	DC	0.50 ④	2500
250	DC	0.25 ④	2500

J-Frame Electrical Rating Data ①②

Maximum Voltage	Frequency	Maximum Current Amperes	Dielectric Withstand Voltage
600	50/60 Hz	6	2500
125	DC	0.50 ④	2500
250	DC	0.25 ④	2500

K-Frame Electrical Rating Data ②⑤

Maximum Voltage	Frequency	Maximum Current Amperes	Dielectric Withstand Voltage
600	50/60 Hz	6	2500
125	DC	0.50 ④	2500
250	DC	0.25 ④	2500

L- and M-Frames Electrical Rating Data ②

Maximum Voltage	Frequency	Maximum Current Amperes	Dielectric Withstand Voltage
600	50/60 Hz	6	2500
125	DC	0.50 ④	2500
250	DC	0.25 ④	2500

N-Frame Electrical Rating Data ②⑥

Maximum Voltage	Frequency	Maximum Current Amperes	Dielectric Withstand Voltage
600	50/60 Hz	6	2500
125	DC	0.50 ④	2500
250	DC	0.25 ④	2500

R-Frame Electrical Rating Data ⑦⑧

Maximum Voltage	Frequency	Maximum Current Amperes
600	50/60 Hz	6
125	DC	0.50 ④
250	DC	0.25 ④

Notes

① Endurance: 6000 electrical operations plus 4000 mechanical operations.
② Pigtail wire size: 18 AWG (0.82 mm^2).
③ For use in electronic circuit of 100 micro amperes and 15 Vdc minimum.
④ Non-inductive load.
⑤ Endurance: 5000 electrical operations plus 1000 mechanical operations.
⑥ Endurance: 3000 electrical operations plus 1000 mechanical operations.
⑦ Endurance: 500 electrical operations plus 2500 mechanical operations.
⑧ Pigtail wire size: 18 AWG (0.82 mm^2). Leads are red, black and blue.

Auxiliary Switch and Alarm Switch Combination

F-Frame Electrical Rating Data ①②

Maximum Voltage	Frequency	Maximum Current Amperes	Dielectric Withstand Voltage
600	50/60 Hz	6	2500
125	DC	0.50 ③	2200
250	DC	0.25 ③	2200

J-Frame Electrical Rating Data ②④

Maximum Voltage	Frequency	Maximum Current Amperes	Dielectric Withstand Voltage
600	50/60 Hz	6	2500
125	DC	0.50 ③	2500
250	DC	0.25 ③	2500

K-Frame Electrical Rating Data ②⑤

Maximum Voltage	Frequency	Maximum Current Amperes	Dielectric Withstand Voltage
600	50/60 Hz	6	2500
125	DC	0.50 ③	2500
250	DC	0.25 ③	2500

L- and M-Frames Electrical Rating Data ②⑤

Maximum Voltage	Frequency	Maximum Current Amperes	Dielectric Withstand Voltage
600	50/60 Hz	6	2500
125	DC	0.50 ③	2500
250	DC	0.25 ③	2500

N-Frame Electrical Rating Data ②⑥

Maximum Voltage	Frequency	Maximum Current Amperes	Dielectric Withstand Voltage
600	50/60 Hz	6	2500
125	DC	0.50 ③	2500
250	DC	0.25 ③	2500

Notes

① Endurance: 6000 electrical operations plus 4000 mechanical operations.
② Pigtail wire size: 18 AWG (0.82 mm^2).
③ Non-inductive load.
④ Endurance: 6000 electrical operations plus 2000 mechanical operations.
⑤ Endurance: 5000 electrical operations plus 1000 mechanical operations.
⑥ Endurance: 3000 electrical operations plus 1000 mechanical operations.

Shunt Trip

F-Frame Electrical Rating Data ①②③

50/60 Hz Supply Voltage	50/60 Hz Minimum Operating Voltage	50/60 Hz VA	DC Supply Voltage	DC Minimum Operating Voltage	DC VA
12	6.75	75	12	9	100
24	6.75	300	24	9	400
48	36	92	48	36	100
60	36	140	60	36	160
110	156	480	110	77	55
120	156	570	120	77	66
127	156	640	125	77	71
208	156	180	—	—	—
220	156	200	—	—	—
240	156	240	—	—	—
380	300	610	127	—	72
415	300	130	220	—	110
440	300	330	250	—	140
480	300	380	—	—	—
525	300	450	—	—	—
550	300	530	—	—	—
600	300	590	—	—	—

J-Frame Electrical Rating Data ①②④

50/60 Hz Supply Voltage	50/60 Hz Minimum Operating Voltage	50/60 Hz VA	DC Supply Voltage	DC Minimum Operating Voltage	DC VA
12	9	31	12	8.4	50
24	9	173	24	8.4	247
48	36	686	48	33.6	1094
60	36	1014	60	33.6	1698
110 ⑤	60.5	66	110	77	112
120 ⑤	60.5	84	120	77	138
127 ⑤	60.5	102	125	77	150
208 ⑤	60.5	354	—	77	—
220 ⑤	60.5	396	—	—	—
240 ⑤	60.5	432	—	—	—
380	285	180	110	154	40
400	285	200	120	154	58
415	285	240	125	154	—
440	285	610	127	154	—
480	360	34	—	—	—
525	360	42	—	—	—
550	360	50	—	—	—
600	360	60	—	—	—

K-Frame Electrical Rating Data ⑥⑦⑧

50/60 Hz Supply Voltage	50/60 Hz Minimum Operating Voltage	50/60 Hz VA	DC Supply Voltage	DC Minimum Operating Voltage	DC VA
12	9	45	12	8.4	35
24	9	200	24	8.4	170
48	—	830	48	—	710
60	—	1280	60	—	1105
110 ⑤	60	100	110	77	110
120 ⑤	60	120	120	77	130
127 ⑤	60	140	125	77	140
208 ⑤	60	420	—	—	—
220 ⑤	60	470	—	—	—
240 ⑤	60	550	—	—	—
380	285	95	220	154	41
400	285	108	250	154	54
415	285	120	—	154	—
440	285	136	—	154	—
480	360	40	—	—	—
525	360	50	—	—	—
550	360	50	—	—	—
600	360	70	—	—	—

Notes

① Average unlatching time: 6 milliseconds.
② Average circuit breaker contact total opening time: 18 milliseconds.
③ Endurance: 6000 electrical operations plus 4000 mechanical operations.
④ Endurance: 6000 electrical operations plus 2000 mechanical operations.
⑤ Supply voltages suitable for use with Class 1 GFP devices. Marking label included with accessory kits.
⑥ Approximate unlatching time: 6 milliseconds.
⑦ Approximate total circuit breaker contact opening time: 8 milliseconds.
⑧ Endurance: 5000 electrical operations plus 1000 mechanical operations.

L- and M-Frame Electrical Rating Data ①②③

50/60 Hz			DC		
Supply Voltage	Minimum Operating Voltage	VA	Supply Voltage	Minimum Operating Voltage	VA
12	9	45	12	9	35
24	9	200	24	9	170
48	34	830	48	34	710
60	34	1280	60	34	1105
110 ④	60	100	110	77	110
120 ④	60	120	120	77	130
127 ④	60	140	125	77	140
208 ④	60	420	—	77	—
220 ④	60	470	—	—	—
240 ④	60	550	—	—	—
380	266	95	220	154	41
400	266	108	250	—	54
415	266	120	—	—	—
440	266	136	—	—	—
480	336	40	—	—	—
525	336	50	—	—	—
550	336	50	—	—	—
600	336	70	—	—	—

N-Frame Electrical Rating Data ①②⑤

50/60 Hz			DC		
Supply Voltage	Minimum Operating Voltage	VA	Supply Voltage	Minimum Operating Voltage	VA
24	16.8	200	24	16.8	170
48	33.6	830	48	33.6	710
60	33.6	1280	60	33.6	1150
110 ④	60	100	110	77	110
120 ④	60	120	120	77	130
127 ④	60	140	125	77	140
208 ④	60	420	—	—	—
220 ④	60	470	—	—	—
240 ④	60	550	—	—	—
380	266	95	220	154	41
400	266	108	250	—	54
415	266	120	—	—	—
440	266	136	—	—	—
480	336	40	—	—	—
525	336	50	—	—	—
550	336	50	—	—	—
600	336	70	—	—	—

Notes

① Approximate unlatching time: 6 milliseconds.
② Approximate total circuit breaker contact opening time: 18 milliseconds.
③ Endurance: 5000 electrical operations plus 1000 mechanical operations.
④ Supply voltages suitable for use with Class 1 GFP devices. Marking label included with accessory kits.
⑤ Endurance: 3000 electrical operations plus 1000 mechanical operations.

R-Frame Electrical Rating Data ①②③④⑤⑥

Suffix Number	Application Ratings Voltage (V)	Application Ratings Frequency (Hz)	Electrical Operating Ratings Supply Voltage (V)	Minimum Operating Voltage (V)	I_p (A)	I_{rms} at 0.250s (A)	I_{rms} at 0.033s (A)	VA	One Minute Dielectric Withstand Voltage (V)
03/03K	24	50/60	24	16.8	36.1	—	25.5	612	1050
	24	DC	24	16.8	36.1	16.5	—	396	1050
05/05K	48–60	50/60	48	34.0	13.1	—	9.2	450	1120
	48–60	50/60	60	34.0	17.2	—	12.2	740	1120
11/11K ③	110–240	50/60	110	60.5	4.2	—	3.0	330	1480
	110–240	50/60	120	60.5	4.5	—	3.2	390	1480
	110–240	50/60	127	60.5	4.6	—	3.3	430	1480
	110–240	50/60	208	60.5	7.9	—	5.6	1170	1480
	110–240	50/60	220	60.5	8.5	—	6.0	1370	1480
	110–240	50/60	240	60.5	8.7	—	6.1	1470	1480
14/14K	380–440	50/60	380	266.0	4.5	—	3.2	1220	1880
	380–440	50/60	415	266.0	5.0	—	3.6	1500	1880
	380–440	50/60	440	266.0	5.3	—	3.7	1640	1880
	220–250	DC	220	154.0	—	2.4	—	530	1500
	220–250	DC	250	154.0	—	2.7	—	680	1500
18/18K	480–600	50/60	480	336.0	0.6	—	0.4	200	2200
	480–600	50/60	525	336.0	0.7	—	0.5	270	2200
	480–600	50/60	550	336.0	0.7	—	0.5	280	2200
	480–600	50/60	600	336.0	0.8	—	0.6	360	2200
23/23K	48–60	DC	48	34.0	—	9.8	—	470	1120
	48–60	DC	60	34.0	—	11.6	—	700	1120
26/26K	110–125	DC	110	77.0	—	3.3	—	370	1250
	110–125	DC	120	77.0	—	3.6	—	440	1250
	110–125	DC	125	77.0	—	3.8	—	480	1250

Notes

① Approximate unlatching time of 6 milliseconds.
② Average circuit breaker contact total opening time approximately 62 milliseconds, at rated voltage.
③ Endurance: 500 electrical operations and 2500 mechanical operations.
④ Shunt trip can be operated up to a maximum of six times per minute.
⑤ Maximum operating voltage—110% of maximum voltage range rating.
⑥ Pigtail wire size: 18 AWG (0.82 mm^2). Leads are yellow and white.

Undervoltage Release Mechanism

F-Frame Electrical Rating Data ①

50/60 Hz					DC				
	Dropout Voltage		Pickup Voltage			Dropout Voltage		Pickup Voltage	
Supply Voltage	Minimum	Maximum	Maximum	VA	Supply Voltage	Minimum	Maximum	Maximum	VA
12	4.2	6.3	7.6	1.3	12	4.2	8.4	10.2	2.8
12	4.2	6.3	7.6	2.5	12	4.2	8.4	10.2	2.8
24	8.4	16.8	20.4	1.4	24	8.4	16.8	20.4	1.6
48	21.0	33.6	40.8	1.2	48	21.0	33.6	40.8	1.3
60	21.0	33.6	40.8	1.9	60	21.0	33.6	40.8	2.0
110	44.5	77.0	93.5	1.3	110	44.5	77.0	93.5	1.5
120	44.5	77.0	93.5	1.5	120	44.5	77.0	93.5	1.7
127	44.5	77.0	93.5	1.7	125	44.5	77.0	93.5	1.9
208	84.0	145.6	176.8	2.2	220	87.5	154.0	187.0	2.6
220	84.0	145.6	176.8	2.4	250	87.5	154.0	187.0	3.4
240	84.0	145.6	176.8	2.9	—	—	—	—	—
380	168.0	266.0	323.0	2.9	—	—	—	—	—
415	168.0	266.0	323.0	3.5	—	—	—	—	—
440	168.0	266.0	323.0	3.9	—	—	—	—	—
480	168.0	266.0	323.0	4.6	—	—	—	—	—
525	210.0	367.0	446.0	4.3	—	—	—	—	—
550	210.0	367.0	446.0	4.8	—	—	—	—	—
600	210.0	367.0	446.0	5.8	—	—	—	—	—

J-Frame Electrical Rating Data ②③

50/60 Hz					DC				
	Dropout Voltage		Pickup Voltage			Dropout Voltage		Pickup Voltage	
Supply Voltage	Minimum	Maximum	Maximum	VA	Supply Voltage	Minimum	Maximum	Maximum	VA
12	4.2	8.4	10.2	1.9	12	4.2	8.4	10.2	1.6
24	8.4	16.8	20.4	3.9	24	8.4	16.8	20.4	3.1
48	21.0	33.6	40.8	2.5	48	21.0	33.6	40.8	2.0
60	21.0	33.6	40.8	3.8	60	21.0	33.6	40.8	3.1
110	44.5	77.0	93.5	1.8	110	44.5	77.0	93.5	1.6
120	44.5	77.0	93.5	2.1	120	44.5	77.0	93.5	1.9
127	44.5	77.0	93.5	2.4	125	44.5	77.0	93.5	2.2
208	84.0	145.6	176.8	2.7	220	87.5	154.0	187.0	3.1
220	84.0	145.6	176.8	3.1	250	87.5	154.0	187.0	4.0
240	84.0	145.6	176.8	3.8	—	—	—	—	—
380	168.0	266.0	323.0	3.4	—	—	—	—	—
415	168.0	266.0	323.0	4.0	—	—	—	—	—
440	168.0	266.0	323.0	4.6	—	—	—	—	—
480	168.0	266.0	323.0	5.4	—	—	—	—	—

Notes

① Endurance: 6000 electrical operations plus 4000 mechanical operations.
② Endurance: 6000 electrical operations plus 2000 mechanical operations.
③ For electrical rating data for manual, automatic and electrical reset undervoltage release mechanisms, refer to Eaton.

K-Frame Electrical Rating Data ①

50/60 Hz					DC				
	Dropout Voltage		Pickup Voltage			Dropout Voltage		Pickup Voltage	
Supply Voltage	Minimum	Maximum	Maximum	VA	Supply Voltage	Minimum	Maximum	Maximum	VA
12	4.2	8.4	10.2	1.9	12	4.2	8.4	10.2	1.6
24	8.4	16.8	20.4	3.9	24	8.4	16.8	20.4	3.1
48	21.0	33.6	40.8	2.5	48	21.0	33.6	40.8	2.0
60	21.0	33.6	40.8	3.8	60	21.0	33.6	40.8	3.1
110	44.5	77.0	93.5	1.8	110	44.5	77.0	93.5	1.6
120	44.5	77.0	93.5	2.1	120	44.5	77.0	93.5	1.9
127	44.5	77.0	93.5	2.4	125	44.5	77.0	93.5	2.2
208	84.0	145.6	176.8	2.7	220	87.5	154.0	187.0	3.1
220	84.0	145.6	176.8	3.1	250	87.5	154.0	187.0	4.0
240	84.0	145.6	176.8	3.8	—	—	—	—	—
380	168.0	266.0	323.0	3.4	—	—	—	—	—
415	168.0	266.0	323.0	4.0	—	—	—	—	—
440	168.0	266.0	323.0	4.6	—	—	—	—	—
480	168.0	266.0	323.0	5.4	—	—	—	—	—

L- and M-Frames Electrical Rating Data ①

50/60 Hz					DC				
	Dropout Voltage		Pickup Voltage			Dropout Voltage		Pickup Voltage	
Supply Voltage	Minimum	Maximum	Maximum	VA	Supply Voltage	Minimum	Maximum	Maximum	VA
12	4.2	8.4	10.2	1.9	12	4.2	8.4	10.2	1.6
24	8.4	16.8	20.4	3.9	24	8.4	16.8	20.4	3.1
48	21.0	33.6	40.8	2.5	48	21.0	33.6	40.8	2.0
60	21.0	33.6	40.8	3.8	60	21.0	33.6	40.8	3.1
110	44.5	77.0	93.5	1.8	110	44.5	77.0	93.5	1.6
120	44.5	77.0	93.5	2.1	120	44.5	77.0	93.5	1.9
127	44.5	77.0	93.5	2.4	125	44.5	77.0	93.5	2.2
208	84.0	145.6	176.8	2.7	220	87.5	154.0	187.0	3.1
220	84.0	145.6	176.8	3.1	250	87.5	154.0	187.0	4.0
240	84.0	145.6	176.8	3.8	—	—	—	—	—
380	168.0	266.0	323.0	3.4	—	—	—	—	—
415	168.0	266.0	323.0	4.0	—	—	—	—	—
440	168.0	266.0	323.0	4.6	—	—	—	—	—
480	168.0	266.0	323.0	5.4	—	—	—	—	—

Note

① Endurance: 5000 electrical operations plus 1000 mechanical operations.

N-Frame Electrical Rating Data ①

50/60 Hz					DC				
	Dropout Voltage		Pickup Voltage			Dropout Voltage		Pickup Voltage	
Supply Voltage	Minimum	Maximum	Maximum	VA	Supply Voltage	Minimum	Maximum	Maximum	VA
12	4.2	8.4	10.2	1.9	12	4.2	8.4	10.2	1.6
24	8.4	16.8	20.4	3.9	24	8.4	16.8	20.4	3.1
48	21.0	33.6	40.8	2.5	48	21.0	33.6	40.8	2.0
60	21.0	33.6	40.8	3.8	60	21.0	33.6	40.8	3.1
110	44.5	77.0	93.5	1.8	110	44.5	77.0	93.5	1.6
120	44.5	77.0	93.5	2.1	120	44.5	77.0	93.5	1.9
127	44.5	77.0	93.5	2.4	125	44.5	77.0	93.5	2.2
208	84.0	145.6	176.8	2.7	220	87.5	154.0	187.0	3.1
220	84.0	145.6	176.8	3.1	220	87.5	154.0	187.0	—
240	84.0	145.6	176.8	3.8	250	—	—	—	4.0
380	175.0	266.0	323.0	3.4	—	—	—	—	—
415	175.0	266.0	323.0	4.0	—	—	—	—	—
480	175.0	266.0	323.0	4.6	—	—	—	—	—
500	175.0	266.0	323.0	5.4	—	—	—	—	—

Note

① Endurance: 3000 electrical operations plus 1000 mechanical operations.

R-Frame AC Undervoltage Release Mechanism (Handle Reset) Ratings ①②

Catalog Suffix	Application Ratings Voltage (V)	Electrical Operating Ratings Supply Voltage (V)	Dropout Voltage (V) Minimum	Dropout Voltage (V) Maximum	Pickup Voltage (V) Max.	VA	Approximate Operating Time (ms) Minimum UVR Response ③	Initiation Circuit Breaker Contact Separation ④	Maximum Circuit Breaker Contact Opening	Dielectric Withstand Voltage (V) ⑤
02/02K	12	12	4.2	8.4	10.2	2.3	5	46	77	1024
03/03K	24	24	8.4	16.8	20.4	3.1	5	46	77	1048
05/05K	48–60	48	21.0	33.5	40.8	3.4	5	46	77	1120
		60	21.0	33.5	40.8	6.0	5	46	77	1120
08/08K	110–127	110	44.5	77.0	93.5	3.3	5	46	77	1254
		120	44.5	77.0	93.5	3.6	5	46	77	1254
		127	44.5	77.0	93.5	3.8	5	46	77	1254
11/11K	208–240	208	84.0	145.6	176.8	4.2	5	46	77	1480
		220	84.0	145.6	176.8	6.6	5	46	77	1480
		240	84.0	145.6	176.8	7.2	5	46	77	1480
29/29K	380–500	380	168.0	266.0	323.0	3.8	5	46	77	2000
		415	168.0	266.0	323.0	8.3	5	46	77	2000
		440	168.0	266.0	323.0	8.8	5	46	77	2000
		480	168.0	266.0	323.0	9.6	5	46	77	2000
		500	168.0	266.0	323.0	10.0	5	46	77	2000

R-Frame DC Undervoltage Release Mechanism (Handle Reset) Ratings ①②

Catalog Suffix	Application Ratings Voltage (V)	Electrical Operating Ratings Supply Voltage (V)	Dropout Voltage (V) Minimum	Dropout Voltage (V) Maximum	Pickup Voltage (V) Max.	VA	Approximate Operating Time (ms) Minimum UVR Response ③	Initiation Circuit Breaker Contact Separation ④	Maximum Circuit Breaker Contact Opening	Dielectric Withstand Voltage (V) ⑤
20/20K	12	12	4.2	8.4	10.2	3.4	5	46	77	1024
21/21K	24	24	8.4	16.8	20.4	4.3	5	46	77	1048
23/23K	48–60	48	21.0	33.5	40.8	4.8	5	46	77	1120
		60	21.0	33.5	40.8	7.2	5	46	77	1120
26/26K	110–127	110	43.8	77.0	93.5	3.3	5	46	77	1250
		120	43.8	77.0	93.5	3.6	5	46	77	1250
		125	43.8	77.0	93.5	3.8	5	46	77	1250
28/28K	220–250	220	87.5	154.0	187.0	6.6	5	46	77	1500
		250	87.5	154.0	187.0	7.5	5	46	77	1500

Notes

① Endurance: 500 electrical operations plus 2500 mechanical operations.
② Pigtail wire size: 18 AWG (0.82 mm^2). Leads are orange and brown.
③ UVR will override a momentary voltage dip up to the response time shown.
④ Unlatching occurs 1 millisecond before circuit breaker contacts begin to separate.
⑤ For 1 minute.

Series C External Accessories

Contents

Description	*Page*
Product Overview	**V4-T2-116**
Standards and Certifications	**V4-T2-117**
Quick Reference	**V4-T2-118**
G-Frame (15–100 Amperes)	**V4-T2-121**
F-Frame (10–225 Amperes)	**V4-T2-135**
J-Frame (70–250 Amperes)	**V4-T2-153**
K-Frame (70–400 Amperes)	**V4-T2-161**
L-Frame (125–600 Amperes)	**V4-T2-185**
M-Frame (300–800 Amperes)	**V4-T2-211**
N-Frame (400–1200 Amperes)	**V4-T2-222**
R-Frame (800–2500 Amperes)	**V4-T2-237**
Motor Circuit Protectors (MCP)	**V4-T2-256**
Motor Protection Circuit Breakers (MPCB)	**V4-T2-267**
Type ELC Current Limiter Attachment (Size 0–4)	**V4-T2-269**
Current Limiting Circuit Breaker Module	**V4-T2-270**
Internal Accessories	**V4-T2-273**
External Accessories	
Product Selection	**V4-T2-308**
Accessories	**V4-T2-326**
Technical Data and Specifications	**V4-T2-327**
Dimensions	**V4-T2-328**

External Accessories

Product Overview

End Cap Kit

The end cap kit slides onto the line or load conductor of the circuit breaker and acts as a threaded adapter for the conductor to accept a ring terminal or other bolt-on connector. The end cap kit is available with English and metric thread sizes. (Field installation only.) Listed per UL File E7819.

Keeper Nut

The keeper nut slides onto the line or load conductor of the circuit breaker and acts as a threaded adapter for the conductor to accept a ring terminal or other bolt-on connector. The keeper nut is available with English and metric thread sizes. Screws and washers are supplied by customer. (Field installation only.) Listed per UL File E7819.

L-, M-, N-Frames

Not required. Terminals are threaded.

J-Frame Plug Nut

The plug nut is used in applications where screw-connected ring-type terminals are preferred to connect cables to circuit breaker conductors. The plug nut is press-fit into the opening in the circuit breaker terminal conductor. Screws and washers are supplied by customer.

Terminal Adapter

Control Wire Terminal Kit

The control wire terminal kit provides a means to tap off control power from a main disconnect, using the provided male end of a quick disconnect.

For use with steel or stainless steel terminals only.

Note: Terminal Kits contain one terminal for each pole and one terminal cover.

Multiwire Connectors

Eaton's field-installed multiwire connectors for the load side (OFF) end terminals are used to distribute the load from the circuit breaker to multiple devices without the use of separate distribution terminal blocks.

Multiwire lug kits include mounting hardware, insulators and tin-plated aluminum connectors to replace three mechanical load lugs. UL listed as used on the load side (OFF) end.

Terminal Shields

Terminal shields provide protection against accidental contact with live line side terminations. Terminal shields are fabricated from high dielectric insulating material and fasten over the front terminal access openings. Small openings in the shields provide limited access to the terminals for tightening connectors. (Field installation only.)

Rear Fed Terminals.

Rear fed terminals allow the cable to connect to the breaker from the back instead of the top. Terminal shields or interphase barriers are included with each rear fed terminal kit (depending on frame size). When catalog number starts with a 3, it indicates a kit with three terminals in each kit. Catalog number beginning with a TA indicates one terminal.

Terminal End Covers

The terminal end covers are designed for use in motor control center applications where, because of confined spaces, line side conductors are normally custom fitted. The molded end covers are made of high dielectric glass-polyester and slide over the line ends of the circuit breaker. Close fitting conductor openings are molded into the end covers. The end cover and circuit breaker case fit together to form terminal compartments that isolate discharged ionizing gases during circuit breaker tripping. Terminal end covers are available with two conductor opening diameters, 0.25-inch (6.4 mm) and 0.41-inch (10.4 mm), and are listed per UL File E7819. (Field installation only.)

Interphase Barriers

The interphase barriers provide additional electrical clearance between circuit breaker poles for special termination applications. The barriers are high dielectric insulating plates that are installed in the molded slots between the terminals. (Field installation only.) Two per package.

Base Mounting Plate

Suitable for mounting six single-pole circuit breakers.

DIN Rail Adapter

For use with standard 35 mm DIN rail such as, 35 x 7.5 or 35 x 15 mm per DIN EN50022.

Adapter mounting screws included are for use with two- and three-pole circuit breakers. Adapters for single-pole circuit breakers clip into the base molding.

Key Operated Attachment

Lock Dog (Non-Padlockable)

Non-Padlockable Handle Block

The non-padlockable handle block secures the circuit breaker handle in either the ON or OFF position. (Trip-free operation allows the circuit breaker to trip when the handle block holds the circuit breaker handle in the ON position.) The device is positioned over the circuit breaker handle and secured by a setscrew to deter accidental operation of the circuit breaker handle. Listed per UL File E7819. (Field installation only.)

Padlockable Handle

Padlockable Handle Lock

The device is positioned in the cover opening to prevent handle movement. Will accommodate one 5/16-inch (8 mm) padlock.

Snap-on Padlockable Handle Lock Hasp

The snap-on padlockable handle lock allows the handle to be locked in the OFF or ON position. (Trip-free operation allows the circuit breaker to trip when the handle lock holds the circuit breaker handle in the ON position.) This device was designed for use on the single-pole circuit breaker, but may be used on one-, two-, three- and four-pole styles. The handle lock snaps onto the escutcheon area of the handle with an optional retaining screw for added secureness. The handle lock will accommodate one padlock with a 1/4-inch (6.4 mm) shackle. Listed per UL File E7819. (Field installation only.)

Padlockable Handle Lock Hasp

The padlockable handle lock hasp allows the handle to be locked in the ON or OFF position. (Trip-free operation allows the circuit breaker to trip when the handle lock holds the circuit breaker handle in the ON position.) The hasp mounts on the circuit breaker cover within the trimline. The cover is predrilled on both sides of the operating handle so that the hasp can be mounted on either side of the handle. The hasp will accommodate up to three padlocks with 1/4-inch (6.4 mm) shackles, one per circuit breaker. Listed per UL File E7819. (Field installation only.)

Cylinder Lock

The cylinder lock internally blocks the trip bar in the tripped position to prevent the circuit breaker from being switched to ON. The cylinder lock is factory installed in the left pole only of the circuit breaker cover. Other internally mounted accessories cannot be installed in the same pole as the cylinder lock. (Factory installation only.)

Key Interlock Kit (Lock Not Included)

The key interlock is used to externally lock the circuit breaker handle in the OFF position. When the key interlock is locked, an extended deadbolt blocks movement of the circuit breaker handle. Uniquely coded keys are removable only with the deadbolt extended. Each coded key controls a group of circuit breakers for a given specific customer installation.

The key interlock assembly is Underwriters Laboratories listed for field installation under UL File E7819 and consists of a mounting kit and a purchaser supplied deadbolt lock. The mounting kit comprises a mounting plate, which is secured to the circuit breaker cover in either the left- or right-pole position, key interlock mounting screws, and a wire seal. Specific mounting kits are required for individual key interlock types.

Sliding Bar Interlock

The sliding bar interlock provides mechanical interlocking between two adjacent three-pole circuit breakers. It is installed on the enclosure cover between the circuit breakers. When the sliding bar interlock handle is moved from one side to the other, a bar extends to alternately block movement of the circuit breaker handles and prevents both circuit breakers from being switched to ON at the same time. Sliding bar interlocks are not UL listed. (Field installation only.)

Walking Beam Interlock

The walking beam Interlock provides mechanical interlocking between two adjacent circuit breakers of the same pole configuration. The walking beam interlock mounts on a bracket behind and between the circuit breakers. A plunger on each end of the beam is inserted through an access hole in the back plate and base of each circuit breaker. The walking beam interlock prevents both circuit breakers from being switched ON at the same time. If a walking beam interlock is installed, the wiring troughs in the back of the circuit breaker case are blocked by the plungers and cannot be used for cross wiring. Factory modified circuit breakers are required for this application. UL File E38116.

Electrical Operator

The electrical (solenoid) operator is a single solenoid mechanism that enables local and remote circuit breaker ON, OFF, and reset switching. The electrical operator is mounted on the circuit breaker cover within the trimline of the circuit breaker. The electrical operator uses a unique bi-stable latch that allows the device to operate using one solenoid. The accessory provides high-speed switching with a maximum operating time of 5 cycles (80 mS), making it suitable for generator synchronizing applications.

Means are provided for remote electrical operation and for local manual operation. A special slide includes provisions for padlocking the circuit breaker handle in the OFF position. The slide will accept three padlock shackles with a maximum diameter of 1/4-inch (6.4 mm) each. An interlock electrically disconnects the solenoid when the electrical operator cover is removed. The rating data tables provide electrical rating data for the electrical (solenoid) operator.

The electrical (motor) operator allows the circuit's breaker to be opened, closed or reset remotely. It also has a lock-off capability and provisions for manual operation.

The electrical (motor) operator contains a reversible motor connected to a ball screw. The ball screw drives the circuit breaker handle. Limit switches and relays are used to control the motor.

Plug-In Adapters

Plug-in adapters simplify installation and front removal of circuit breakers. Individual line and load plug-in adapters are available for rear connection applications on two-, three-, and four-pole circuit breakers. Common mounting plates for line- and load-end adapters are available.

One plug-in adapter kit is required for line-end and one for load-end.

Plug-in adapters are UL approved unless otherwise noted.

Rear Connecting Studs

Rear connecting studs are available in several sizes to accommodate specific fixed-mounted circuit breaker applications.

Each rear connecting stud assembly consists of one stud and one tube. To maintain proper clearances between poles, select alternate long and short stud assemblies for circuit breakers with more than one pole. One assembly is required for line-end and one for load-end of each pole. Tubes must be ordered separately. Connecting studs are available only with English thread sizes.

Note: Not UL listed.

Panelboard Connecting Straps

Panelboard connecting straps are used to connect the circuit breaker terminals to the panelboard bus. The panelboard connecting straps are available with various ratings for outside and center poles. (Field installation only.)

Panelboard connecting straps are available to meet the needs of most standard panelboard applications. Style numbers for mounting brackets for CDP panelboard installations are also included.

Note: Not UL listed. Refer to panelboard manufacturer for compatibility.

Type LFD Current Limiter

The LFD current limiter is an accessory that bolts to the load end of a standard FDB or FD thermal-magnetic circuit breaker, providing 200,000 A interrupting capacity at up to 600 Vac. LFD current limiters for thermal-magnetic and electronic circuit breakers are listed with Underwriters Laboratories under File E47239.

Ground Fault Alarm Unit

The ground fault alarm unit is a remotely mounted device with a combination indicating light/test button that will light when the breaker trips or alarms on ground fault. The ground fault alarm unit requires a separate 120 Vac power source to power the light and the internal relay, which has 1NO and 1NC contacts for remote indication. The ground fault alarm unit can be panel mounted for ordering with an optional face mounting bracket. For use on Digitrip 310 only, K- through N-Frame.

IQ Energy Sentinel

The IQ Energy Sentinel is a highly accurate, microprocessor-based, breaker-mounted device designed to monitor power and energy readings. It represents an alternative to watt meters, watt-hour meters, and watt demand meters. Key advantages include savings in space, lower installation costs, and remote monitoring capability.

The IQ Energy Sentinel mounts on the load side of a Series C F-Frame (150 ampere) circuit breaker. It can be applied on three-phase, four-wire systems, or single-phase, three-wire systems with voltage connected through Phases A and C.

For more information, see Descriptive Bulletin 8178.

Potential Transformer Module

The potential transformer module is required for the Digitrip OPTIM 1050 to provide a voltage input to allow the trip unit to monitor power and energy as well as power factor. The potential transformer module is a 6 VA transformer with a primary voltage input of up to 600 volt line to line. Three 0.1 ampere fuses are provided on the primary of the transformer and can be used for isolation purposes during dielectric testing. The device is normally panel mounted and can feed up to 16 OPTIM trip units.

Solid-State (Electronic) Portable Test Kit

The solid-state (electronic) portable test kit provides verification of performance of all ratings of Digitrip 310 electronic trip units installed in circuit breakers while in service under varying load and/or phase imbalance. The test kit operates on 120-volt, 50/60 Hz power; it includes complete instructions and test times for testing long time, short time/instantaneous operation and optional ground fault operation of the circuit breaker.

Breaker Interface Module (BIM)

The Breaker Interface Module (BIM) is a panel mounted user interface device that is mounted on the front of an electrical assembly or at a remote location. The BIM is used to access, configure, test and display information for OPTIM trip units and other devices. The BIM consists of four display windows, eight function buttons, 18 LEDs, and a graphical time/current curve to provide breaker status, operational information, protection status and energy monitoring. A 24 Vdc power supply is required to provide power to the BIM. This is supplied by the switchboard builder to Eaton's specifications. The BIM is a member of Eaton's PowerNet family of communicating devices that connects OPTIM trip units, Digitrip RMS 810/910 trip units and energy sentinels as a subnetwork system. The BIM can also be connected to a main network via a PONI module to PowerNet software.

Digitrip OPTIMizer

The Digitrip OPTIMizer is a hand-held programmer that is used to access, configure, test and display information from OPTIM trip units. The OPTIMizer plugs into the front of an OPTIM trip unit via an eight-pin telephone jack and is powered by a nine-volt battery or the auxiliary power module. One highlighted feature is the "Copy" and "Download" commands.

Setting up multiple OPTIM trips can be finished in minutes and with no errors. An Auxiliary Power Module connection provides a trip test when control power is not present at the breaker. The OPTIMizer is supplied as a standard package to include the programmer, the eight-pin connection cord, battery and carrying case. The auxiliary power module is optional.

Auxiliary Power Module

The auxiliary power module is a power supply requiring 120 Vac input at 50 or 60 Hz that provides a 32 Vdc output. The auxiliary power module provides control power for testing an OPTIM trip unit when other means of control power is not available or for continuous OPTIMizer operation versus temporary with a battery. The auxiliary power module connects into the top of the Digitrip OPTIMizer via a keyed receptacle. The main application for the auxiliary power module would be for the testing of a standalone non-communicating OPTIM breaker that ordinarily would not have control power.

Cause of Trip Display/Remote Mount Cause of Trip Display

The Cause of Trip Display can be field-installed on any Digitrip RMS 310+ trip unit. The device provides breaker information through an LCD screen, such as cause of trip, phrase current, ground current and low loads. The display is ideal for troubleshooting common trips such as ground fault, long delay, and instantaneous/short delay. The DIGIVIEW version will provide a local display at the breaker without additional wiring by connecting directly onto the trip unit. The DIGIVIEWR06 version has a 6 foot cable that allows users to mount the display on the outside of an enclosure door and connect to the trip unit that is contained inside the enclosure.

Cause of Trip LED Module

The Cause of Trip LED Module can be field-installed on any Digitrip RMS 310+ trip unit. The device provides a cause of trip indication via LED. The Cause of Trip LED Module connects directly onto the trip unit. When the breaker trips, the module indicates the cause of trip (long delay, short delay, instantaneous and ground) via LED indication. The module is reset after the breaker is reset.

Note: The OPTIMizer can work off of 32 Vdc control power, although 24 Vdc is the standard on OPTIM breakers.

Product Selection

Termination Hardware—End Cap Kit

End Cap Kit

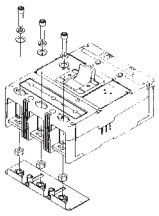

End Cap Kit

Thread Type	Thread Size	Catalog Number
Two-Pole F-Frame (225A)		
Imperial	10–32	**KPEK12**
Metric	M–5	**KPEKM12**
Three-Pole F-Frame (225A)		
Imperial	10–32	**KPEK1**
Metric	M–5	**KPEKM1**
Four-Pole F-Frame (225A)		
Imperial	10–32	**KPEK14**
Metric	M–5	**KPEKM14**
Three-Pole J-Frame		
Imperial	0.312–18	**KPEK2**
Metric	M–8	**KPEKM2**
Four-Pole J-Frame		
Imperial	0.312–18	**KPEK24**
Metric	M–8	**KPEKM24**
Three-Pole K-Frame		
Imperial	0.312–18	**KPEK3**
Metric	M–8	**KPEKM3**
Four-Pole K-Frame		
Imperial	0.312–18	**KPEK34**
Metric	M–8	**KPEKM34**
Three-Pole L-Frame		
Imperial	0.312-18	**KPEK4**
Metric	M-8	**KPEKM4**
Four-Pole L-Frame		
Imperial	0.312–18	**KPEK44**
Metric	M–8	**KPEKM44**

Termination Hardware—Keeper Nut

F-Frame Keeper Nut

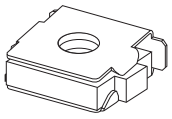

F-Frame Keeper Nut

Thread Type	Thread Size	Catalog Number Package of 12 (Priced Individually)
Imperial	10–32	**KPR1A**
Metric	M–5	**KPR1AM**

K-Frame Keeper Nut

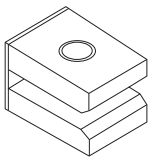

K-Frame Keeper Nut

Thread Type	Thread Size	Line/Load End	Catalog Number Package of 3
Imperial	0.375–16	Line	**KPR3A**
		Load	**KPR3B**
Metric	M–8	Line	**KPR3AM**
		Load	**KPR3BM**

Note

L-, M-, N-Frames not required. Terminals are threaded.

Termination Hardware

J-Frame Plug Nut

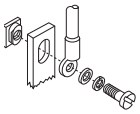

J-Frame Plug Nut

Thread Type	Thread Size	Catalog Number Package of 6
Imperial	0.250–20	**PLN2**
Metric	M–6	**PLN2M**

K-Frame Terminal Adapter

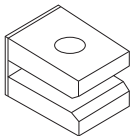

K-Frame Terminal Adapter ①

Line/Load End	Catalog Number
Line and load	**TAD3**

F-Frame Ordering Information

Terminals must be ordered separately. Priced individually.

F-Frame Kit

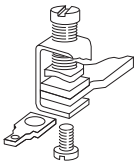

F-Frame Control Wire Terminal Kit ②

Description	Maximum Amperes	Catalog Number
Package of 12 control wire terminal tangs.	150	**FCWTK**
	225	**FCWTK225**

J- and K-Frame Ordering Information

Terminals must be ordered separately. Priced individually.

J- and K-Frame Kit

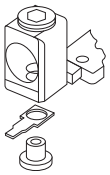

J- and K-Frame Control Wire Terminal Kit

Description	Catalog Number
Package of 12 control wire terminal tangs.	**KCWTK**

L-Frame Control Wire Terminal Kit

AWG Wire Range/Number Conductors	Metric Wire Range mm²	Catalog Number
Al/Cu 3/0–350 kcmil (2)	95–150	**TA602LDCW** ③
Cu 250–350 kcmil (2)	120–250	**T602LDCW** ③
Al/Cu 400–500 kcmil (2)	185–240	**2TA603LDKCW** ④⑤
Al/Cu 400–500 kcmil (2)	185–240	**3TA603LDKCW** ④⑥
Al/Cu 400–500 kcmil (2)	185–240	**4TA603LDKCW** ④⑦

Notes

① K-Frame terminal adapter for use in replacing LB/DA breakers.
② Not for use with T250KB terminals.
③ Individually packed.
④ Terminal kits contain one terminal for each pole and one terminal cover.
⑤ Two-pole kit.
⑥ Three-pole kit.
⑦ Four-pole kit.

Termination Hardware

G-Frame Control Wire Terminal

Description	Catalog Number	Catalog Number
Control wire terminal (kit of 12)	**5652B38G01**	**GCWTK**

Multiwire Connectors

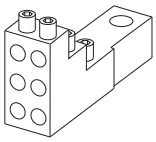

Multiwire Connectors Ordering Information (Package of 3)

Maximum Amperes	Wires per Terminal	Wire Size Range AWG Cu	Kit Catalog Number ①
G-Frame ②			
100	3	14–2	**3TA100G3K**
	6	14–6	**3TA100G6K**
F-Frame			
225	3	14–2	**3TA150F3K**
	6	14–6	**3TA150F6K**
J-Frame			
250	3	14–2	**3TA250J3K**
	6	14–6	**3TA250J6K**
K-Frame			
400	3	14–2/0	**3TA400K3K**
	6	14–3	**3TA400K6K**

Rear Fed Terminals

Frame	Maximum Amperes	Wire Size Range AWG Cu	Catalog Number ①
FD	150	14–4/0	**TA150FDRF**
	150	14–4/0	**3TA150FDRF**
	225	6–300 kcmil	**TA225FDRF**
	225	6–300 kcmil	**3TA225FDRF**
KD	400	250–500 kcmil	**TA350KRF**
	400	250–500 kcmil	**3TA350KRF**
MDL	800	3/0 MAX (3)	**TA800MDLRF**
	800	3/0 MAX (3)	**3TA800MDLRF**

Base Mounting Hardware

Ordering Information

Hardware for surface mounting of circuit breakers is supplied only on request. Hardware consists of mounting screws and lockwashers. Order hardware for circuit breaker pole configurations as required.

Mounting Hardware

Screw Length in Inches (mm)	Catalog Number
G-Frame	
0.138–32 x 2.63 (3.5 x 66.7 mm) Std.	**624B375G23**
0.138–32 x 3.00 (3.5 x 76.2 mm)	**8703C80G05**

Notes

① When catalog number starts with a 3, it indicates a kit with three terminals in each kit.
Catalog number beginning with a TA indicates one terminal.

② GD breakers require special tapping for multiwire lugs, as described in the IL or use with standard aluminum collars.

Imperial Thread Mounting Hardware

Number of Poles	Description	Type of Mounting	Catalog Number
F-Frame			
1	0.164-32 x 3.188-inch pan-head steel screws, lockwashers and clamps	Individual	**624B375G01**
		Group ①	**624B375G02**
2	0.164-32 x 1.5-inch pan-head steel screws and lockwashers	Individual	**4218B80G01**
3, 4	0.164-32 x 1.5-inch pan-head steel screws and lockwashers	Individual	**BMH1**
J-Frame			
2, 3, 4	0.250-20 x 2.75 inch pan-head steel screws and lockwashers	Individual	**BMH2**
K-Frame			
2, 3, 4	0.250-20 x 1.5 inch pan-head steel screws and lockwashers	Individual	**BMH3**
L-Frame			
2, 3, 4	0.250-20 x 1.5 inch filister-head steel screws and lockwashers and flat washers	Individual	**BMH4**
M-Frame			
2, 3	0.3125-18 x 1.25 inch filister-head steel screws and lockwashers and flat washers	Individual	**BMH5**
N-Frame			
2, 3, 4	0.3125-18 x 1.25 inch pan-head steel screws and lockwashers	Individual	**BMH5**
R-Frame			
Supplied by customer			

Metric Thread Mounting Hardware

Number of Poles	Description	Type of Mounting	Catalog Number
F-Frame			
1	M4–0.7 x 80 mm pan-head steel screws, lockwashers, and clamps	Individual	**4218B80G09**
		Group ①	**4218B80G10**
2	M4–0.7 x 38 mm pan-head steel screws and lockwashers	Individual	**4218B80G11**
3, 4	M4–0.7 x 38 mm pan-head steel screws and lockwashers	Individual	**BMH1M**
J-Frame			
2, 3, 4	M6–0.7 x 70 mm pan-head steel screws and lockwashers	Individual	**BMH2M**
K-Frame			
2, 3, 4	M6–0.7 x 38 mm pan-head steel screws and lockwashers	Individual	**BMH3M**
L-Frame			
2, 3	—	Individual	**BMH4M**
M-Frame			
2, 3	—	Individual	**BMH5M**
N-Frame			
2, 3	—	Individual	**BMH5M**
R-Frame			
Supplied by customer			

Note

① One set of hardware for two circuit breakers.

Terminal Shields

G-Frame Terminal Shield

Number Units in Package	Catalog Number
10	**GTSK3**

F-Frame

F-Frame Terminal Shield

		Standard (Package of 10) (Priced Individually)	Special—For Use When Electrical Operator is Mounted on Circuit Breaker
Number of Poles	**Location**	**Catalog Number**	**Catalog Number**
1	Line	**625B229G06**	—
2	Line	**625B229G07**	—
3	Line	**625B229G08**	**4210B95G01**
4	Line	**625B229G09**	**4210B95G02**

J-Frame

J-Frame Terminal Shield

Number of Poles	Location	Catalog Number (Package of 10)
2, 3	Line End	**1266C07G01**
4	Line End	**6631C01G01**
2, 3	Load End	**6641C16G01**
4	Load End	**6641C16G02**

K-Frame

K-Frame Terminal Shield

Number of Poles	Location	Catalog Number (Package of 10)
2, 3	Line	**TS33LN**
4	Line	**TS34LN**
3	Load	**TS33LD**

L-Frame Terminal Shield

Catalog Number (Package of 1)
314C420G05

M-Frame Terminal Shield

Catalog Number (Package of 1)
208B966G01

N-Frame Terminal Shield

Catalog Number (Package of 1)
NTS3K

Terminal End Covers

Ordering Information

The terminal end cover is available for three-pole circuit breakers only. Two conductor opening sizes are available. Specify quantity (one per circuit breaker) when ordering.

F-Frame

F-Frame Terminal End Covers

Conductor Opening Diameter in Inches (mm)	Catalog Number
0.25 (6.35 mm)	**TEC1**
0.41 (10.41 mm)	**TEC2**

Interphase Barriers

Ordering Information

Two per package.

Interphase Barrier

Interphase Barriers

Frame	Catalog Number
F	**IPB1**
J, K	**IPB3**
L	**IPB4**
M	**IPB4**
N	**IPB5**

Base Mounting Plate

Base Mounting Plate

Base Mounting Plate G-Frame GD/GHC

Number of Units in Package	Catalog Number
1	**207B513G01**

DIN Rail Adapter

DIN Rail Adapter

DIN Rail Adapter G-Frame GD/GHC

Number of Poles	Number of Units in Package	Catalog Number
1, 2	10	**1225C79G01**
3	10	**1225C79G02** ①

All Metal DIN Rail Adapter G-Frame GD/GHC

Number of Poles	Number of Units in Package	Catalog Number
3	1	**EGGDDIN**

Key Operated Attachment

Key Operated Attachment

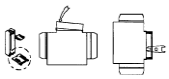

Key Operated Attachment G-Frame GD/GHC

Number of Units in Package	Catalog Number
10	**GKOA**

Note

① For use on three-pole breakers only.

Lock Dog (Non-Padlockable)

Lock Dog (Non-Padlockable)

Lock Dog (Non-Padlockable) G-Frame GD/GHC/GHB/GMCP

Number of Units in Package	Catalog Number
1	**1294C01H01**

Handle Ties

Handle Tie F-Frame—FHB/FHC

Number of Poles	Number of Units in Package	Catalog Number
2	10	**HTBFD2P**
3	10	**HTBFD3P**

Handle Tie G-Frame—GHB/GHC

Number of Poles	Number of Units in Package	Catalog Number
2	10	**HTBGD2P**
3	10	**HTBGD3P**

Non-Padlockable Handle Block

Non-Padlockable Handle Block

Non-Padlockable Handle Block

Frame	Catalog Number
F	**LKD1**
J, K	**LKD3**
L, M, N	**LKD4**

Padlockable Handle

Padlockable Handle

Padlockable G-Frame GD/GHC/GHB

Number of Units in Package	Catalog Number ①
10	**1223C77G03**
10	**1223C77G05** ②
10	**1223C77G06** ②

Padlockable Handle Lock

Padlockable Handle Lock

Padlockable Handle Lock

Frame	Catalog Number
G	**GPHBOFF**
J, K	**PHB3**

Snap-On Padlockable Handle Lock Hasp

Snap-On Padlockable Handle Lock Hasp

Snap-On Padlockable Handle Lock Hasp

Frame	Catalog Number
F	**PHL1**

Notes

① Accepts 0.285 Lock Shank.
② Padlockable in the OFF position only.

Padlockable Handle Lock Hasp

Padlockable Handle Lock Hasp

Padlockable Handle Lock Hasp

Description	Catalog Number
F-Frame	
Single-pole breakers	**PHL1**
Two-, three- and four-pole breakers	**PLK1**
For left side mounting	**PLK1LOFF**
For right side mounting	**PLK1ROFF**
J, K-Frames	
Two-, three- and four-pole breakers	**PLK3**
For left side mounting	**PLK3LOFF** ①
For right side mounting	**PLK3ROFF** ①
L-Frame (Side Mounted)	
Lock ON or OFF	**HLK4**
Lock OFF only (left-hand mount)	**HLK4LOFF** ①
L-Frame (Top Mounted)	
Lock ON or OFF	**HLK4S**
Lock OFF only	**HLK4SOFF** ①
M-Frame	
Lock ON or OFF	**HLK4**
Lock OFF only (left-hand mount)	**HLK4LOFF** ①
M-Frame (Vertical Mounting)	
Lock ON/OFF	**HLK4S**
Lock OFF only	**HLK4SOFF**
N-Frame	
Side mounted	**PLK5**
Top mounted (ON/OFF)	**PLK5S**
Top mounted (OFF only)	**PLK5SOFF** ①
R-Frame	
Lock ON/OFF	**HLK6**
Lock OFF only	**HLK6OFF** ①

Cylinder Lock

Cylinder Lock

Cylinder Lock

Frame	Catalog Number
F, J, K	Order by description

Note

① For padlockable handle lock hasp to padlock handle in OFF position only, order either catalog number.

Key Interlock Kit

Ordering Information

Key interlock kits contain the necessary interface and hardware to install a trapped key interlock from one of the listed manufacturers. Key interlocks are not installed or supplied as part of the breaker, and must be obtained separately from the lock manufacturer or through the manufacturer of the equipment on which the breaker will be installed. Select the mounting kit catalog number to match the type of lock used.

Key Interlock Kit

Key Interlock Kit (Trapped Key Interlock)

Lock Manufacturer	Lock Type	Bolt Projection in Withdrawn Position in Inches (mm)	Kit Catalog Number
F-Frame			
Superior	B-4003-1	0.38 (9.5)	**KYK1**
Kirk®	F	0.38 (9.5)	**KYK1**
Castell ①	K or QK	0.38 (9.5)	**CTK1**
J, K-Frames			
Superior	B-4003-1	0.38 (9.5)	**KYK3**
Kirk	F	0.38 (9.5)	**KYK3**
Castell ①	K or QK	0.38 (9.5)	**CTK3**
L-, M-, N-Frames			
Superior	B-4003-1	0.38 (9.5)	**KYK4**
Kirk	F	0.38 (9.5)	**KYK4**
Castell ①	K or QK	0.38 (9.5)	**CTK4**
R-Frame			
Superior	B-4003-1	1.0 (25.4)	**KYK6**
Kirk	F	1.0 (25.4)	**KYK6**
Castell ①	K or QK	1.0 (25.4)	**CTK6**
JG-Frame			
Superior	B-4003-1	0.38 (9.5)	**KYKJG**
Kirk	F	0.38 (9.5)	**KYKJG**
Castell ①	K or QK	0.38 (9.5)	**CTKJG**
LG-Frame			
Superior	B-4003-1	0.38 (9.5)	**KYKLG**
Kirk	F	0.38 (9.5)	**KYKLG**
Castell ①	K or QK	0.38 (9.5)	**CTKLG**

Note

① When ordering Castell Interlock, it is necessary for customer to specify that the mounting bolt holes must be 10 mm in diameter

Sliding Bar Interlock

Ordering Information

The sliding bar interlock is available for mounting between two adjacent three-pole circuit breakers with circuit breakers centerline spacing as indicated in table and enclosure front panel thickness of 1/8 or 3/16 inch (3.2 or 4.8 mm). (For field installation only.)

Sliding Bar Interlock

Sliding Bar Interlock

Frame	Centerline Spacing in Inches (mm)	Catalog Number
F	4.19 (106.4)	**SBK1**
J	4.38 (111.3)	**SBK2**
K	5.75 (146.0)	**SBK3**
L, M	8.50 (215.9)	**SBK4**
N	8.50 (215.9)	**SBK5**

Walking Beam Interlock

Ordering Information

The walking beam interlock is available for mounting between two adjacent circuit breakers spaced 1/4-inch (6.4 mm) apart and having the same pole configuration. The two circuit breakers must be factory modified to accept the walking beam interlock assembly (suitable for use with either two-, three- or four-pole circuit breakers).

With properly modified circuit breakers, the walking beam interlock is suitable for field installation. Order circuit breakers specifying modification for walking beam (20% price adder) and select walking beam interlock from table below. Circuit breakers and walking beam interlock are boxed and shipped separately.

Walking Beam Interlock

Walking Beam Interlock

Frame	Catalog Number
F	**WBL1**
K	**WBL3**
L, M	**WBL4A**
N	**WBL5**
R ①	**WBL6**

Note

① Three-pole only.

Electrical Operator

F-Frame Electrical (Solenoid) Operator

Voltage	Frequency	Terminal Block Catalog Number	18-Inch (457.2 mm) Pigtail Lead Catalog Number
120	AC	**EOP1T07**	**EOP1P07**
240	AC	**EOP1T11**	**EOP1P11**

F-Frame Electrical (Motor) Operator ①

Voltage	Frequency	18-Inch (457.2 mm) Pigtail Lead Catalog Number
120	50/60 Hz AC	**MOPFD120C**
24	DC	**MOPFD24D**
125	DC	**MOPFD120C**
208–240	50/60 Hz	**MOPFD240C**
220–250	DC	**MOPFD240C**

J-Frame Electrical (Solenoid) Operator

Operating Voltage	Frequency	Terminal Block Catalog Number
120	50/60 Hz AC	**EOP2T07**
240	50/60 Hz AC	**EOP2T11**

K-Frame Electrical (Solenoid) Operator

Operating Voltage	Frequency	Terminal Block Catalog Number
120	50/60 Hz AC	**EOP3MT07**
240	50/60 Hz AC	**EOP3MT11**

K-Frame Electrical (Solenoid) Operator Base Mounting Kit

Frame	Catalog Number
K	**BBMK3**

L- and M-Frame Electrical (Motor) Operator (310 and OPTIM)

Operating Voltage	Frequency	Terminal Block Catalog Number
120	50/60 Hz	**EOP4MT07**
208	50/60 Hz	**EOP4MT11**
240	50/60 Hz	**EOP4MT11A**
480	50/60 Hz	**EOP4MT15**
125	DC	**EOP4MT26**
24	DC	**EOP4MT21**

Note

① Motor operators MOP1P07, MOP1P03DC, MOP1P05DC and MOP1P07DC are replaced by MOPFD motor operators listed in table.

N-Frame Electrical (Motor) Operator

Operating Voltage	Frequency	Pigtail Leads Catalog Number
120	50/60 Hz	**EOP5T07**
208	50/60 Hz	**EOP5T09**
240	50/60 Hz	**EOP5T11**
480	50/60 Hz	**EOP5T15**
24	DC	**EOP5T21**
48	DC	**EOP5T22**
125	DC	**EOP5T26**

R-Frame Electrical (Motor) Operator

Operating Voltage	Frequency	Factory-Installed Terminal Block Catalog Number
120	50/60 Hz	**EOP6T08K**
240	50/60 Hz	**EOP6T11K**
48	DC	**EOP6T21K**

Plug-In Adapters

F-Frame Ordering Information (Flat Bar Type)

Continuous Current Rating (Amperes)	Two-Pole Catalog Number	Three-Pole Catalog Number	Four-Pole Catalog Number
100–225	**1480D13G01**	**1480D13G02**	**1480D13G07** ①
Mounting plate	**176C511H01**	**507C047H01**	—

J-Frame Ordering Information (Flat Bar Type)

Continuous Current Rating (Amperes)	Terminal End	Two-Pole Catalog Number	Three-Pole Catalog Number	Four-Pole Catalog Number
250	Line	**1260C86G05**	**1260C86G06**	**1231C67G01**
	Load	**1260C86G07**	**1260C86G08**	**1231C67G02**
	One line and one load	**506C144G27**	**506C144G28**	—
Mounting plate	—	②	**PMP23**	—

K-Frame Ordering Information (Flat Bar Type)—600 Vac Maximum

Continuous Current Rating (Amperes)	Two-Pole Catalog Number	Three-Pole Catalog Number	Four-Pole Catalog Number
400	**PAD32**	**PAD33**	—
Mounting plate	②	**PMP33**	—

Notes

① 100 ampere maximum.

② Use three-pole mounting plate for two-pole circuit breaker.

L-Frame (Threaded Stud Type)

Continuous Current Rating (Amperes)	Two-Pole Catalog Number	Three-Pole Catalog Number	Four-Pole Catalog Number
600 (threaded stud type)	**506C059G03**	**506C059G04**	**PAD44**
600 (flat bar type)	**1288C19G01**	**1288C19G02**	**6636C55H01**
Mounting plate	**504C824H01**	**504C824H01**	—

M-Frame (Flat Bar Type)—600 Vac Maximum

Continuous Current Rating (Amperes)	Two-Pole Catalog Number	Three-Pole Catalog Number
800	**2614D53G05**	**2614D53G06**
Mounting plate	**1290C73H01**	**1290C73H01**

N-Frame (Flat Bar Type)

Continuous Current Rating (Amperes)	Two-Pole Catalog Number	Three-Pole Catalog Number
1200	**2614D53G03**	**2614D53G04**
Mounting plate	**1290C73H01**	**1290C73H01**

Plug-In Adapters

Frame	Number of Poles	Standard Certification	Catalog Number
FD	3	IEC	**PAD3F**
FD	4	IEC	**PAD4F**
JD	3	IEC	**PAD3JD**
KD	3	IEC	**PAD3K**
LD	3	IEC	**PAD3LD**
LD	4	IEC	**PAD4LD**

Rear Connecting Studs

F-Frame ①

Stud Ampere Rating	Stud Catalog Number	Tube Catalog Number
For 15 to 100 Ampere Circuit Breakers		
100 A short	**451D874G01**	**32B9446H20**
100 A short	**451D874G01**	**32B9446H21**
100 A short	**451D874G01**	**32B9446H22**
100 A short	**451D874G01**	**32B9446H23**
100 A long	**451D874G02**	**32B9446H24**
100 A long	**451D874G02**	**32B9446H25**
100 A long	**451D874G02**	**32B9446H26**
100 A long	**451D874G02**	**32B9446H27**
For 110 to 225 Ampere Circuit Breakers		
225A short	**374D883G01**	**374D883H06**
225A short	**374D883G01**	**374D883H07**
225A short	**374D883G01**	**374D883H08**
225A short	**374D883G01**	**374D883H09**
225A long	**374D883G02**	**374D883H10**
225A long	**374D883G02**	**374D883H11**
225A long	**374D883G02**	**374D883H12**
225A long	**374D883G02**	**374D883H13**

J-Frame ①

Stud Ampere Rating	Stud Catalog Number	Tube Catalog Number
250A short	**5010D23G01**	**456D983H05**
250A short	**5010D23G01**	**456D983H06**
250A short	**5010D23G01**	**456D983H07**
250A long	**5010D23G02**	**5010D23H05**
250A long	**5010D23G02**	**5010D23H06**
250A long	**5010D23G02**	**5010D23H07**

K-Frame ①

Stud Ampere Rating	Stud Catalog Number	Standard Tube Catalog Number
400 A short	**6642C14G02**	**313C909H17**
400 A short	**6642C14G04**	**313C909H18**
400 A short	**6642C14G06**	**313C909H19**
400 A long	**6642C14G03**	**313C909H20**
400 A long	**6642C14G05**	**313C909H21**
400 A long	**6642C14G07**	**313C909H22**

L-Frame Ordering Information

Stud Catalog Number
314C960G07
314C960G08
314C960G09

M-Frame Ordering Information ①

Stud Ampere Rating	Stud Catalog Number
225	**314C960G01**
400	**314C960G04**
400	**314C960G05**
400	**314C960G06**
600	**314C960G07**
600	**314C960G08**
600	**314C960G09**
800	**314C960G10**
800	**314C960G11**
800	**314C960G12**

N-Frame Ordering Information ①

Stud Ampere Rating	Stud Catalog Number
800	**623B222G01**
800	**623B222G02**
800	**623B222G03**
1200	**373B375G04**
1200	**373B375G03**

Note

① Not UL listed.

Panelboard Connecting Straps

F-Frame Panelboard Connecting Straps

Bus Spacing in Inches (mm)	Continuous Current Rating (Amperes)	Pole Connector Type Center Catalog Number	Pole Connector Type Outside Catalog Number
2.75 (69.9)	50	**673B142G02**	**673B142G09**
2.75 (69.9)	100	**673B142G02**	**673B142G10**
2.75 (69.9)	150	**673B142G04**	**673B142G03**
3.50 (88.9)	50	**1253C72G01**	**1253C72G03**
3.50 (88.9)	100	**1253C73G03**	**1253C73G06**
3.50 (88.9)	150	**1253C73G01**	**1253C73G05**

F-Frame Mounting Bracket

Number of Poles	Catalog Number
2	**624B600H02**
3	**624B600H01**

J-Frame Panelboard Connecting Straps

Bus Spacing in Inches (mm)	Continuous Current Rating (Amperes)	Pole Connector Type Center Catalog Number	Pole Connector Type Outside Catalog Number
3.50 (88.9)	250	**2600D26G01**	**2600D26G02**

K-Frame Panelboard Connecting Straps

Bus Spacing in Inches (mm)	Continuous Current Rating (Amperes)	Pole Connector Type Center Catalog Number	Pole Connector Type Outside Catalog Number
3.50 (88.9)	400	**4212B78G02**	**4212B77G01**

K-Frame Mounting Bracket

Number of Poles	Catalog Number
2, 3	**208B264H01**

L-Frame Panelboard Connecting Straps

Continuous Current Rating (Amperes)	Pole Connector Type Center Catalog Number	Outside Catalog Number
600	**624B609G01**	**506C052G01**

L-Frame Mounting Bracket

Number of Poles	Catalog Number
2, 3	**208B297H01**

M-Frame Panelboard Connecting Straps

Bus Spacing in Inches (mm)	Continuous Current Rating (Amperes)	Connector Type	Pole Connector Type Catalog Number
3.50 (88.9)	800	Short	**314C996G01**
		Medium	**314C996G02**
		Long	**314C996G03**

M-Frame Mounting Bracket

Catalog Number
315C270H01

N-Frame Panelboard Connecting Straps

Bus Spacing in Inches (mm)	Continuous Current Rating (Amperes)	Connector Type	Pole Connector Type Catalog Number
3.50 (88.9)	1200	Short	**505C606G04**
		Medium	**505C606G05**
		Long	**505C606G06**

N-Frame Mounting Bracket (Four Required)

Catalog Number
315C270H01

Type LFD Current Limiter

The LFD current limiter is an accessory that bolts to the load end of a standard FDB or FD thermal-magnetic and electronic circuit breaker, providing 200,000 A interrupting capacity at up to 600 Vac. LFD current limiters for thermal-magnetic circuit breakers are listed with Underwriters Laboratories under File E47239.

Type LFD Current Limiter

Type LFD Current Limiter

Circuit Breaker Rating Amperes	Catalog Number
15–70	**LFD3070R**
80–160	**LFD3150R**

Ground Fault Alarm Unit

The ground fault alarm unit is a remotely mounted device with a combination indicating light/test button that will light when the breaker trips or alarms on ground fault. The ground fault alarm unit requires a separate 120 Vac power source to power the light and the internal relay, which has 1NO and 1NC contacts for remote indication. The ground fault alarm unit can be panel mounted for ordering with an optional face mounting bracket. For use on Digitrip 310 only, K- through N-Frame.

Ground Fault Alarm Unit

GF Alarm Unit

Description	Catalog Number
Ground fault alarm unit	**GFAU**
Face mounting bracket	**1264C67G01**

IQ Energy Sentinel

The IQ Energy Sentinel is a highly accurate, microprocessor-based, breaker-mounted device designed to monitor power and energy readings. It represents an alternative to watt meters, watt-hour meters, and watt demand meters. Key advantages include savings in space, lower installation costs, and remote monitoring capability.

The IQ Energy Sentinel mounts on the load side of a Series C F-Frame (150 ampere) circuit breaker. It can be applied on three-phase, four-wire systems, or single-phase, three-wire systems with voltage connected through Phases A and C.

For more information, see Descriptive Bulletin 8178.

Potential Transformer Module

The potential transformer module is required for the Digitrip OPTIM 1050 to provide a voltage input to allow the trip unit to monitor power and energy as well as power factor. The potential transformer module is a 6 VA transformer with a primary voltage input of up to 600 volt line to line. Three 0.1 ampere fuses are provided on the primary of the transformer and can be used for isolation purposes during dielectric testing. The device is normally panel mounted and can feed up to 16 OPTIM trip units.

Potential Transformer Module

Potential Transformer Module

Description	Catalog Number
Potential transformer module	**DOPTMLN**

Solid-State (Electronic) Portable Test Kit

The solid-state (electronic) portable test kit provides verification of performance of all ratings of Digitrip 310 electronic trip units installed in circuit breakers while in service under varying load and/or phase imbalance. The test kit operates on 120-volt, 50/60 Hz power; it includes complete instructions and test times for testing long time, short time/ instantaneous operation and optional ground fault operation of the circuit breaker.

Portable Test Kit

Description	Catalog Number
Solid-state (electronic) portable test kit	**STK2**

Breaker Interface Module (BIM)

The Breaker Interface Module (BIM) is a panel mounted user interface device that is mounted on the front of an electrical assembly or at a remote location. The BIM is used to access, configure, test and display information for OPTIM trip units and other devices. The BIM consists of four display windows, eight function buttons, 18 LEDs, and a graphical time/current curve to provide breaker status, operational information, protection status and energy monitoring. A 24 Vdc power supply is required to provide power to the BIM. This is supplied by the switchboard builder to Eaton's specifications. The BIM is a member of Eaton's PowerNet family of communicating devices that connects OPTIM trip units, Digitrip RMS 810/910 trip units and energy sentinels as a subnetwork system. The BIM can also be connected to a main network via a PONI module to PowerNet software.

Breaker Interface Module (BIM)

Breaker Interface Module (BIM)

Catalog Number
BIMII

Digitrip OPTIMizer

The Digitrip OPTIMizer is a hand-held programmer that is used to access, configure, test and display information from OPTIM trip units. The OPTIMizer plugs into the front of an OPTIM trip unit via an eight-pin telephone jack and is powered by a nine-volt battery or the auxiliary power module. One highlighted feature is the "Copy" and "Download" commands.

Setting up multiple OPTIM trips can be finished in minutes and with no errors. An Auxiliary Power Module connection provides a trip test when control power is not present at the breaker. The OPTIMizer is supplied as a standard package to include the programmer, the eight-pin connection cord, battery and carrying case. The auxiliary power module is optional.

Note: 24 Vdc Power Supply
A 24 Vdc power supply is required for all Digitrip OPTIM trip units that are required to communicate either on the main Eaton PowerNet network or as a subnetwork to a BIM. The breaker's load is 45 mA of current. Typically one power supply is required per switchboard and can provide control power to a BIM and the OPTIM trip units. The 24 Vdc power supply should be an "isolated high quality" power supply with a "CE" label, and is normally provided by the switchboard manufacturer to Eaton's recommendations.

Digitrip OPTIMizer

Digitrip OPTIMizer

Catalog Number
OPTIMizer—standard package

Auxiliary Power Module

The auxiliary power module is a power supply requiring 120 Vac input at 50 or 60 Hz that provides a 32 Vdc output. The auxiliary power module provides control power for testing an OPTIM trip unit when other means of control power is not available or for continuous OPTIMizer operation versus temporary with a battery. The auxiliary power module connects into the top of the Digitrip OPTIMizer via a keyed receptacle. The main application for the auxiliary power module would be for the testing of a standalone non-communicating OPTIM breaker that ordinarily would not have control power.

Auxiliary Power Module

Auxiliary Power Module

Catalog Number
PRTBAPMDV

Cause of Trip Display/Remote Mount Cause of Trip Display

The Cause of Trip Display can be field-installed on any Digitrip RMS 310+ trip unit. The device provides breaker information through an LCD screen, such as cause of trip, phrase current, ground current and low loads. The display is ideal for troubleshooting common trips such as ground fault, long delay, and instantaneous/short delay.

The DIGIVIEW version will provide a local display at the breaker without additional wiring by connecting directly onto the trip unit. The DIGIVIEWR06 version has a 6 foot cable that allows users to mount the display on the outside of an enclosure door and connect to the trip unit that is contained inside the enclosure.

Cause of Trip Display/Remote Mount Cause of Trip Display

Catalog Number
DIGIVIEW
DIGIVIEWR06

Cause of Trip LED Module

The Cause of Trip LED Module can be field-installed on any Digitrip RMS 310+ trip unit. The device provides a cause of trip indication via LED. The Cause of Trip LED Module connects directly onto the trip unit. When the breaker trips, the module indicates the cause of trip (long delay, short delay, instantaneous and ground) via LED indication. The module is reset after the breaker is reset.

Cause of Trip LED Module

Catalog Number
TRIP-LED

Accessories

Flex Shaft Accessories (F- through R-Frame)

NEMA 12 Safety Door Hardware for Flex Shaft and C371 ①

Handle Length in Inches (mm)	Catalog Number ②
4 (101.6)	**C361KJ4**
6 (152.4)	**C361KJ6**
Roller Latch ③	**C361KR**

Series C Rotary Accessories

As an option, an auxiliary switch is offered so that the control panel builder may electrically indicate the status of the breaker.

This accessory would be mounted on the mechanism and comes with 24-inch (609.6 mm) pigtail leads.

Series C Auxiliary Switch

Catalog Number
5108A61G01

Wire Seal

The wire seal can be used to secure the cover on the trip unit to prevent adjustments after settings are confirmed.

Wire Seal

Description	Catalog Number
Wire seal	**5108A03H01**

Notes

① Customer: Consult with box manufacturer for correct door hardware and any adapters required for assembly.

② The 1/4-inch x 1/2-inch (6.35 x 12.7 mm) standard mill rectangular locking bar is not supplied with these kits.

③ Third roller latch for use with 4- or 6-inch (101.6 or 152.4 mm) handle when 3 point latching is required.

Technical Data and Specifications

Electrical Operator

F-Frame Electrical (Solenoid) Operator Rating Data ①②

Voltage ③	Frequency	Inrush Current Amperes	Maximum Operating Time	Fuse Amperes ④
120	50/60 Hz AC	10	5 cycles (80 ms)	3
240	50/60 Hz AC	5	5 cycles (80 ms)	2

F-Frame Electrical (Motor) Operator Rating Data ②⑤⑥⑦

Voltage ③	Frequency	Inrush Current Amperes
120	AC	2
24	DC	5
48	DC	3
125	DC	2

J-Frame Electrical (Solenoid) Operator Rating Data ①⑥⑧⑨

Voltage ③	Inrush Current Amperes	Fuse Amperes
120	30	6
240	16	4

K-Frame Electrical (Solenoid) Operator Rating Data ①⑥⑧⑨

Operating Voltage ③	Inrush Current Amperes	Fuse Amperes
120	30	6
240	16	4

L- and M-Frame Electrical (Motor) Operator Rating Data ①⑥⑧⑩

Operating Voltage ③	Inrush Current Amperes
120 AC	31
208 AC	13
240 AC	12
125 DC	21
24 DC	50

N-Frame Electrical (Motor) Operator Rating Data ①⑥⑪⑫

Operating Voltage ③	Frequency	Inrush Current Amperes	Fuse Amperes
120	50/60 Hz	31	6
208	50/60 Hz	21	—
240	50/60 Hz	19	4
480	50/60 Hz	—	—
24	DC	50	—
48	DC	80	—
125	DC	21	—

R-Frame Electrical (Motor) Operator Rating Data ⑬⑭⑮⑯

Operating Voltage ⑰	Frequency	Motor Inrush Current Amperes
120	50/60 Hz	40
240	50/60 Hz	27
48	DC	53
24	DC	58

Notes

① UL listed under UL File E64983.
② The electrical operator design is endurance tested for 8000 electrical operations.
③ Tolerance: +10%, –15% of nominal voltage.
④ Use current-limiting type fuse where required.
⑤ UL listed under UL File E64124.
⑥ Frequency: 50/60 Hz.
⑦ Maximum operating time: 3 seconds max. Operator is an intermittent duty device. The safe duty cycle (OFF to ON to OFF) should not exceed one per minute.
⑧ The electrical operator design has been endurance tested for 6000 electrical operations.
⑨ Maximum operating time: 5 cycles (80 mS).
⑩ Maximum operating time: 12 cycles.
⑪ The electrical operator design has been endurance tested for 2,500 electrical operations.
⑫ Maximum operating time: 12 cycles max. Operator is an intermittent duty device. The safe duty cycle (OFF to ON to OFF) should not exceed one per minute.
⑬ Operator is an intermittent duty service. The safe duty cycle (OFF to ON to OFF) should not exceed one per minute.
⑭ Electric Operating time at rated voltage; (a) To turn breaker ON–1/2 second max. (b) To turn breaker OFF–1/2 second max.
⑮ Motor operating temperature; Class "A" temperature limits apply.
⑯ A minimum 1 kVA power source is recommended for motor operation.
⑰ Applied voltage should be no less than 85% or no more than 110% of rated voltage.

For OPTIM trip, OPEOPCK kit required.

Dimensions

Approximate Dimensions in Inches (mm)

Rear Connecting Studs

F-Frame ①

Stud Ampere Rating	Stud Catalog Number	Panel Thickness A	Tube Length B	C	Tube Catalog Number	Dimensions D	E	F
For 15 to 100 Ampere Circuit Breakers								
100 A short	**451D874G01**	1.00 (25.4)	1.06 (26.9)	—	**32B9446H20**	—	3.63 (92.1)	0.31 (7.9)–18
100 A short	**451D874G01**	0.69–0.94 (17.5 to 23.8)	1.38 (34.9)	—	**32B9446H21**	—	3.63 (92.1)	0.31 (7.9)–18
100 A short	**451D874G01**	0.38–0.63 (9.5 to 15.9)	1.69 (42.9)	—	**32B9446H22**	—	3.63 (92.1)	0.31 (7.9)–18
100 A short	**451D874G01**	0.25–0.31 (6.4 to 7.9)	2.00 (50.8)	—	**32B9446H23**	—	3.63 (92.1)	0.31 (7.9)–18
100 A long	**451D874G02**	1.00 (25.4)	—	3.44 (87.3)	**32B9446H24**	6.13 (155.6)	—	0.31 (7.9)–18
100 A long	**451D874G02**	0.69–0.94 (17.5 to 23.8)	—	3.75 (95.2)	**32B9446H25**	6.13 (155.6)	—	0.31 (7.9)–18
100 A long	**451D874G02**	0.38–0.63 (9.5 to 15.9)	—	4.06 (103.1)	**32B9446H26**	6.13 (155.6)	—	0.31 (7.9)–18
100 A long	**451D874G02**	0.25–0.31 (6.4 to 7.9)	—	4.38 (111.3)	**32B9446H27**	6.13 (155.6)	—	0.31 (7.9)–18
For 110 to 225 Ampere Circuit Breakers								
225A short	**374D883G01**	1.00 (25.4)	1.06 (26.9)	—	**374D883H06**	—	4.25 (108.0)	0.44 (11.1)–14
225A short	**374D883G01**	0.69–0.94 (17.5 to 23.8)	1.38 (34.9)	—	**374D883H07**	—	4.25 (108.0)	0.44 (11.1)–14
225A short	**374D883G01**	0.38–0.63 (9.5 to 15.9)	1.69 (42.9)	—	**374D883H08**	—	4.25 (108.0)	0.44 (11.1)–14
225A short	**374D883G01**	0.25–0.31 (6.4 to 7.9)	2.00 (50.8)	—	**374D883H09**	—	4.25 (108.0)	0.44 (11.1)–14
225A long	**374D883G02**	1.00 (25.4)	—	3.44 (87.3)	**374D883H10**	7.50 (190.5)	—	0.44 (11.1)–14
225A long	**374D883G02**	0.69–0.94 (17.5 to 23.8)	—	3.75 (95.2)	**374D883H11**	7.50 (190.5)	—	0.44 (11.1)–14
225A long	**374D883G02**	0.38–0.63 (9.5 to 15.9)	—	4.06 (103.1)	**374D883H12**	7.50 (190.5)	—	0.44 (11.1)–14
225A long	**374D883G02**	0.25–0.31 (6.4 to 7.9)	—	4.38 (111.3)	**374D883H13**	7.50 (190.5)	—	0.44 (11.1)–14

F-Frame

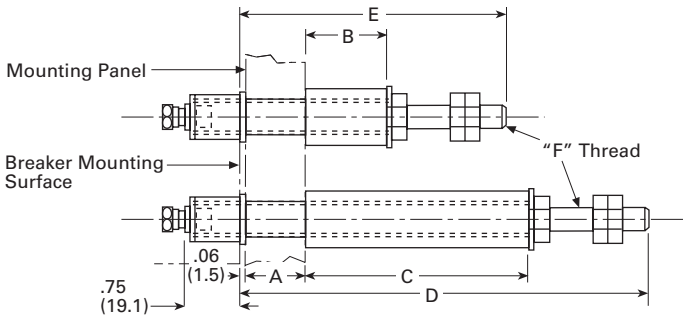

Note

① Not UL listed.

Approximate Dimensions in Inches (mm)

J-Frame

Stud Ampere Rating	Stud Catalog Number	Panel Thickness A	Tube Length B	C	Tube Catalog Number
250A short	**5010D23G01**	0.75–1.00 (19.1–25.4)	0.84 (21.4)	—	**456D983H05**
250A short	**5010D23G01**	0.50–0.75 (12.7–19.1)	1.09 (27.7)	—	**456D983H06**
250A short	**5010D23G01**	0.25–0.50 (6.4–12.7)	1.03 (26.2)	—	**456D983H07**
250A long	**5010D23G02**	0.75–1.00 (19.1–25.4)	—	3.88 (98.6)	**5010D23H05**
250A long	**5010D23G02**	0.50–0.75 (12.7–19.1)	—	4.13 (104.9)	**5010D23H06**
250A long	**5010D23G02**	0.25–0.50 (6.4–12.7)	—	4.38 (111.3)	**5010D23H07**

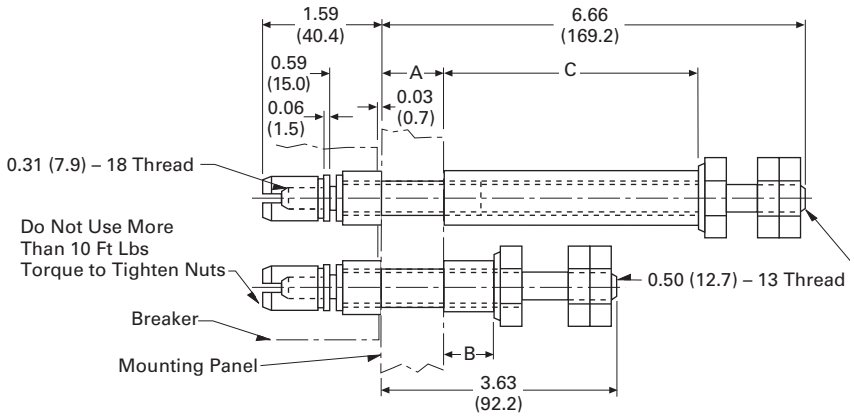

K-Frame ①

Stud Ampere Rating	Stud Catalog Number	Panel Thickness A	Tube Length B	C	Standard Tube Catalog Number	Dimensions D	E	F
400 A short	**6642C14G02**	0.75–1 (19.1–25.4)	0.84 (21.3)	—	**313C909H17**	—	3.66 (93.0)	0.75–16 (19.1–406.4)
400 A short	**6642C14G04**	0.50–0.75 (12.7–18.4)	1.09 (27.69)	—	**313C909H18**	—	—	—
400 A short	**6642C14G06**	0.25–0.5 (6.35–12.7)	1.03 (26.16)	—	**313C909H19**	—	—	—
400 A long	**6642C14G03**	0.75–1 (19.1–25.4)	—	3.78 (96.0)	**313C909H20**	—	—	—
400 A long	**6642C14G05**	0.50–0.75 (12.7–18.4)	—	4.03 (102.4)	**313C909H21**	6.58 (167.1)	—	—
400 A long	**6642C14G07**	0.25 –0.5 (6.35–12.7)	—	4.28 (108.7)	**313C909H22**	—	—	—

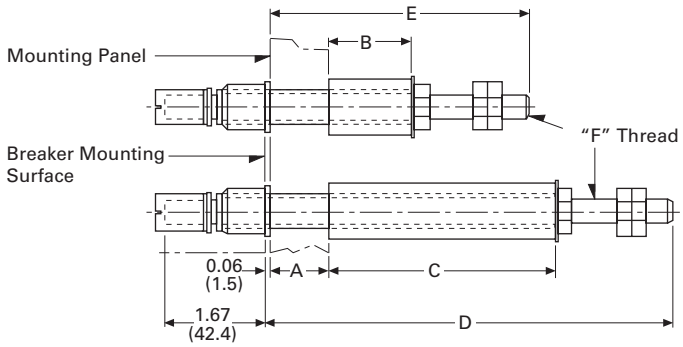

Note

① Not UL listed.

Approximate Dimensions in Inches (mm)

L-Frame

Stud Length (A)	Stud Catalog Number
5.47 (138.9)	**314C960G07**
7.97 (202.4)	**314C960G08**
10.47 (265.9)	**314C960G09**

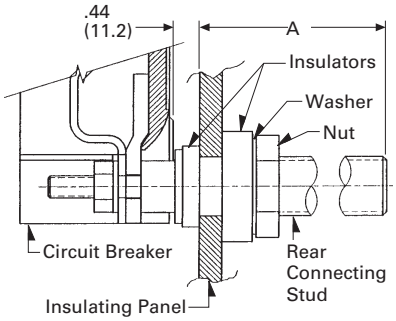

M-Frame

Stud Ampere Rating	Diameter and Thread	Extension Back of Breaker	Stud Catalog Number
225	0.50 (12.7)–13	3.66 (93.0)	**314C960G01**
400	0.75 (19.1)–16	5.91 (150.1)	**314C960G04**
400	0.75 (19.1)–16	8.41 (213.6)	**314C960G05**
400	0.75 (19.1)–16	10.91 (277.0)	**314C960G06**
600	1.00 (25.4)–12	5.91 (150.1)	**314C960G07**
600	1.00 (25.4)–12	8.41 (213.6)	**314C960G08**
600	1.00 (25.4)–12	10.91 (277.0)	**314C960G09**
800	1.13 (28.7)–12	5.91 (150.1)	**314C960G10**
800	1.13 (28.7)–12	8.41 (213.6)	**314C960G11**
800	1.13 (28.7)–12	10.91 (277.0)	**314C960G12**

N-Frame

Stud Ampere Rating	Diameter and Thread	Extension Back of Breaker	Stud Catalog Number
800	1.13 (28.7)–12	5.5 (139.7)	**623B222G01**
800	1.13 (28.7)–12	8.0 (203.2)	**623B222G02**
800	1.13 (28.7)–12	10.5 (266.7)	**623B222G03**
1200	1.25 (31.8)–12	5.5 (139.7)	**373B375G04**
1200	1.25 (31.8)–12	10.5 (266.7)	**373B375G03**

GP, FP, KP, LP and MP Frames

Definite Purpose Molded Case Circuit Breaker Family

Contents

Description	*Page*
Product Selection Guide	V4-T2-332
Electrical Characteristics	V4-T2-332
Features	V4-T2-334
Base Mounting Hardware	V4-T2-334
Line and Load Termination	V4-T2-334
Optional Line and Load Terminals	V4-T2-334
Catalog Number Selection	V4-T2-335
Product Selection	V4-T2-336
Accessories	V4-T2-334
Dimensions	V4-T2-337

Learn Online Drawings Online

Definite Purpose Molded Case Circuit Breakers

Optimized solution for HVAC/R and Pumping Applications.

Product Overview

GP, FP, KP, LP and MP Frames
15–800 Amperes
NEMA 480 Vac

Eaton's Definite Purpose molded case circuit breakers are available in three-pole configurations, and are designed to meet the specific requirements of HVAC/R and pumping applications.

As with other members of Eaton's family of molded case circuit breakers, Definite Purpose breakers provide high quality, reliability, unmatched performance and outstanding value.

Eaton's Definite Purpose breakers are rated from 15–800 A and are available in five frame sizes. Each frame size has the same compact outside dimensions as Series C breakers.

Additionally, Definite Purpose breakers have been rigorously tested to the UL 489 standard. They are assembled in an ISO certified facility.

Trip Units and Terminals

Definite Purpose breakers contain factory-sealed thermal-magnetic trip units.

The GP-Frame breaker (15–100 A) includes line and load terminals and breaker mounting hardware.

FP (15–225A), KP (200–400 A), LP (450–600 A) and MP (700–800 A) Frames ship standard without mounting hardware. For line and load terminals, add "L" to the end of the catalog number or "W" for no terminals.

External Accessories

Definite Purpose breakers use the same external accessories as Series C breakers: handle mechanisms, motor operators, lock-off devices, busbar extensions and multiple terminal arrangements.

Product Selection Guide

2

Electrical Characteristics

Breaker Type		GPS	FPS	FPH	KPS	KPH
Amperage range		15–100 A	15–225A	15–225A	200–400 A	200–400 A
Performance level		**S**	**S**	**H**	**S**	**H**
Breaker capacity (kA rms)	240 Vac	65	65	100	65	100
NEMA, UL, CSA	480 Vac	22	35	65	35	65
	600 Vac	—	18	25	25	35
Number of poles		3	3	3	3	3
Maximum voltage (Vac)		480	600	600	600	600
Thermal-magnetic		■	■	■	■	■

Electrical Characteristics, continued

Breaker Type		LPS	LPH	MPS	MPH
Amperage range		450–600 A	450–600 A	700–800 A	700–800 A
Performance level		**S**	**H**	**S**	**H**
Breaker capacity (kA rms)	240 Vac	65	100	65	100
NEMA, UL, CSA	480 Vac	35	65	50	65
	600 Vac	25	35	25	35
Number of poles		3	3	3	3
Maximum voltage (Vac)		600	600	600	600
Thermal-magnetic		■	■	■	■

Features

Base Mounting Hardware

English base mounting hardware is included with GP frame only. For all other frames, order base mounting hardware separately as per the table to the right.

Base Mounting Hardware

Frame	Catalog Number English	Metric
GP	Included	—
FP	**BMH1**	**BMH1M**
KP	**BMH3**	**BMH3M**
LP	**BMH4**	**BMH4M**
MP	**BMH5**	**BMH5M**

Note: Base mounting hardware, is included with GP-Frame breakers. A separate catalog number is not required.

Line and Load Terminals

Both line and load terminals are included with GP-Frame Definite Purpose breakers. For all other frames, add "L" for line and load terminals to be included or "W" for no terminals.

Line and Load Termination

Breaker	Termination Type	Awg Wire Range	Metric Wire Range (mm)	Wire Type	Bolt Size English	Bolt Size Metric	Torque Lb–In	Torque Nm	Catalog Number
GP	Wire	#14–1/0	2.5–50	Cu only	—	—	45	5.1	**Included**

Optional Line and Load Terminals

Breaker	Maximum Amperes	Awg Wire Range	Wire Type	Catalog Number	Catalog Number with Control Wire Termination
FP	100	#14–#10	Cu/Al	**3T100FB** ①	—
	100	#8	Cu/Al	**3T100FB** ①	—
	100	#6–#4	Cu/Al	**3T100FB** ①	—
	100	#3–4/0	Cu/Al	**3T100FB** ①	—
	200	#3–4/0	Cu only	**3T150FB** ①	—
	225	#4–4/0	Cu/Al	**3TA225FB** ①	—
	225	#6–300	Cu/Al	**3TA225FDK3** ①	—
	225	#6–300	Cu/Al	**3TA225FDK** ①②	—
KP	400	250–500 (1)	Cu/Al	**TA350K**	—
	400	3/0–250 (2)	Cu/Al	**3TA400K** ①	**3TA400KCW**
LP	500	250–350 (2)	Cu/Al	**TA602LD**	**TA602LDCW**
	600	400–500 (2)	Cu/Al	**3TA603LDK** ①	**3TA603LDKCW**
MP	800	3/0–400 (3)	Cu/Al	**TA800MA2**	**TA800MA2CWT**
	800	500–750 (2)	Cu/Al	**TA801MA**	**TA801MACWT**

Notes

① Package of three terminals.
② Replacement use only.

Accessories

End Cap Accessory Kit

End caps for line and load conductor termination are optional with each breaker. End caps secure the conductor with a ring-type connector. The kit includes one end cap, three cap screws, three nuts and three lock washers.

End Cap Accessory Kit

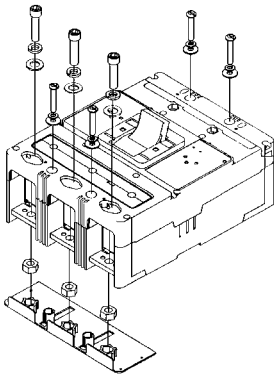

Series C Accessories

For internal accessories, see **Page V4-T2-273**.

For external accessories, see **Page V4-T2-304**.

Catalog Number Selection

This information is presented only as an aid to understanding catalog numbers.
It is not to be used to build catalog numbers for circuit breakers or trip units.

FP S 3 150 L

Frame Size
GP = GP-Frame
FP = FP-Frame
KP = KP-Frame
LP = LP-Frame
MP = LP-Frame

Interrupting Rating
S = Standard
H = High ①

Number of Poles
3 = Three-pole

Options
K = Molded case switch ②
L = Line and load terminals
W = Without terminals or mounting hardware ①

Ampere Rating				
GP-Frame	**FP-Frame**	**KP-Frame**	**LP-Frame**	**MP-Frame**
015 = 15A	**015** = 15A	**175** = 175A	**450** = 450 A	**700** = 700 A
020 = 20 A	**020** = 20 A	**200** = 200 A	**500** = 500 A	**800** = 800 A
025 = 25 A	**025** = 25 A	**250** = 250 A	**600** = 600 A	
030 = 30 A	**030** = 30 A	**300** = 300 A		
035 = 35A	**035** = 35A	**400** = 400 A		
040 = 40 A	**040** = 40 A			
045 = 45A	**045** = 45A			
050 = 50 A	**050** = 50 A			
060 = 60 A	**060** = 60 A			
070 = 70 A	**070** = 70 A			
080 = 80 A	**080** = 80 A			
090 = 80 A	**100** = 100 A			
100 = 100 A	**110** = 110 A			
	125 = 125A			
	150 = 150 A			
	175 = 175A			
	200 = 200 A			
	225 = 225A			

Notes

① Not available on GP-Frame.

② When choosing a molded case switch, select the highest amperage rating for the frame and the standard interrupting rating.

Product Selection

Catalog Numbers

When ordering Definite Purpose breakers, use the appropriate catalog numbers given below.

GP 100

GP-Frame/15–100 A

Frame/ Ampere Rating	Three-Pole Catalog Number
GP/15–100 A circuit breakers	**GPS3015**
	GPS3020
	GPS3025
	GPS3030
	GPS3035
	GPS3040
	GPS3045
	GPS3050
	GPS3060
	GPS3070
	GPS3080
	GPS3090
	GPS3100
GP/100 A molded case switch	**GPS3100K**

Note: All GP frames come standard with line and load terminals and base mounting hardware. Not available without terminals.

FP 225

FP-Frame/15–225 A

Frame/ Ampere Rating	Three-Pole Catalog Number
FP/15–225A circuit breakers	**FPS3015**
	FPS3020
	FPS3025
	FPS3030
	FPS3035
	FPS3040
	FPS3045
	FPS3050
	FPS3060
	FPS3070
	FPS3080
	FPS3090
	FPS3100
	FPS3110
	FPS3125
	FPS3150
	FPS3175
	FPS3200
	FPS3225
	FPH3015
	FPH3020
	FPH3025
	FPH3030
	FPH3035
	FPH3040
	FPH3045
	FPH3050
	FPH3060
	FPH3070
	FPH3080
	FPH3090
	FPH3100
	FPH3110
	FPH3125
	FPH3150
	FPH3175
	FPH3200
	FPH3225
FP/225A molded case switch	**FPS3225K**

Note: At the end of catalog number, add "L" for terminals or "W" for no terminals.

KP 250

KP-Frame/200–400 A

Frame/ Ampere Rating	Three-Pole Catalog Number
KP/175–400 A circuit breakers	**KPS3175**
	KPS3200
	KPS3250
	KPS3300
	KPS3400
	KPH3175
	KPH3200
	KPH3250
	KPH3300
	KPH3400
KP/400 A molded case switch	**KPS3400K**

LP 400

LP-Frame/450–600 A

Frame/ Ampere Rating	Three-Pole Catalog Number
LP/450–600 A circuit breakers	**LPS3450**
	LPS3500
	LPS3600
	LPH3450
	LPH3500
	LPH3600
LP/600 A molded case switch	**LPS3600K**

MP 800

MP-Frame/700–800 A

Frame/ Ampere Rating	Three-Pole Catalog Number
MP/700–800 A circuit breakers	**MPS3700**
	MPS3800
	MPH3700
	MPH3800
MP/800 A molded case switch	**MPS3800K**

Note: For KP, LP, MP frames above, add "L" for terminals or W" for no terminals to end of catalog number.

Dimensions

Approximate Dimensions in Inches (mm)

All dimensions are provided for guidance and should not be used for construction purposes unless approved.

Contact Eaton for detailed outline drawings.

GP, FP, KP, LP and MP Definite Purpose Frames

	Breaker Type				
	GP	**FP**	**KP**	**LP**	**MP**
Width	3.00 (76.2)	4.13 (104.9)	5.49 (139.4)	8.25 (209.6)	8.25 (209.6)
Height	4.88 (124.0)	6.00 (152.4)	10.12 (257.0)	10.75 (273.1)	16.00 (406.4)
Depth	2.63 (66.7)	3.38 (85.9)	4.31 (109.6)	3.81 (96.8)	4.06 (103.1)

PM3 Modules

Power Monitoring and Metering with Modbus RTU

Contents

Description	*Page*
PM3 Monitoring and Metering Module	
Product Selection	**V4-T2-339**
Technical Data and Specifications	**V4-T2-339**
Dimensions and Weights	**V4-T2-340**

Learn Online Drawings Online

PM3 Monitoring and Metering Module

Product Description

The PM3 is the perfect solution for main, branch circuit and standalone monitoring/metering applications. With information at your fingertips, you can meter, monitor and communicate phase current and voltage with calculated power and energy.

The PM3 is versatile, as it connects to the load side of a molded-case circuit breaker (MCCB) and communicates easily to a local network or the Internet through Eaton Power Xpert® Gateways (PXGs). Cost of ownership is reduced through ease of installation. The PM3 is your ideal MCCB metering solution.

Application Description

- Communications via Modbus® and Eaton's INCOM™ protocol; compatible with Eaton's PXG for Web page and Ethernet capabilities
- Works in 240 Vac PM3, 480 Vac and 600 Vac applications
  - 480 Vac PM3 has internal power supply to power electronics
  - 600 Vac PM3 requires 24 Vdc auxiliary power
- Seamlessly integrates with thermal-magnetic or electronic trip units

Features and Benefits

- Communicates electrical system data and circuit breaker status
- Calculates power and energy to an accuracy of 1.0% of reading
- Configurable with thermal-magnetic or electronic trip units
- Suitable for reverse-feed applications
- Easy to install

PM3 Benefits When Combined with 310+ Electronic Trip Unit

- Alarming: high load and ground fault
- Zone selective interlocking
- Arcflash Reduction Maintenance System™
- Cause-of-trip localized information through Digiview and TRIP-LED
- Modbus/INCOM communications
- HMI connectivity through PXG
- Current and voltage metering to 0.5% of reading
- Power and energy monitoring to 1.0% of reading
- Reduces cost of ownership

Standards and Certifications

- Meets ANSI C12.1 revenue grade standard with a current and voltage accuracy of 0.5% of reading
- UL 489, Annex J
- IEC 61000-4-2—ESD
- IEC 61000-4-4—EFT
- IEC 61000-4-5—SURGE
- IEC 61000-4-6—EMC
- ANSI C12.1 (1% accuracy)
- UL/cUL/CE

Listed Listed

Product Selection

PM3 Modules

Frame	Catalog Number 480 V	Catalog Number 600 V
Modbus		
FD	—	**PM3FM**
JG	—	**PM3JM**
KD and LG	—	**PM3LM**
INCOM		
FD	**PM3FI480**	**PM3FI600**
JG	**PM3JI480**	**PM3JI600**
KD and LG	**PM3LI480**	**PM3LI600**

End Cap Kits (Sold Separately)

Frame	Description	Catalog Number
FD	Metric end cap kit for F-Frame	**KPEKM1**
	English end cap kit for F-Frame	**KPEK1**
JG	Metric end cap kit for JG-Frame	**FJ3RTWK**
	English end cap kit for JG-Frame	**FJ3RTDK**
KD	Metric end cap kit for K-Frame	**KPEKM3**
	English end cap kit for K-Frame	**KPEK3**
LG	Metric end cap kit for LG-Frame	**L3RTWK**

Technical Data and Specifications

Metered parameters

- I_A, I_B, I_C
- V_{AB}, V_{BC}, V_{CA}, V_{an}, V_{bn}, V_{cn}
- Apparent Energy, Forward Real Energy, Reverse Real Energy, Net Real Energy, Lagging Reactive Energy, Leading Reactive Energy, Net Reactive Energy
- Apparent Power A, B, C; Apparent Power Total; Reactive Power A, B, C; Reactive Power Total; Real Power A, B, C; Real Power Total
- Frequency, Apparent Power Factor, Apparent PFA, Apparent PFB, Apparent PFC

PM3 Power Monitoring and Communications Module Technical Specifications for Modbus RTU

Description	Specification	
Current Inputs		
Pickup current	0.3A rms	
Maximum reported current	FD/JG 250 A rms	
	KD/LD 630 A rms	
Accuracy	0.5% of reading	
Voltage Inputs		
Range	Line-to-neutral 30–366 Vac	
	Line-to-line 52–635 Vac	
Supported systems	Three-element wye, three-element wye + neutral	
	Two-element delta, four-wire delta systems	
Input impedance	996 kiloohm/phase	
Burden per phase	0.36 VA/phase max. at 600 V; 0.014 VA at 120V	
Phase voltage connections	Internal via screw terminal to busbar For wye system, a neutral is required to be connected to the PM3 on the right Phoenix connector.	
Neutral connection	If neutral is not available, the meter will calculate a virtual neutral based on the phase-to-phase rms voltage. The system voltage must be balanced for this to be accurate.	
Frequency		
Frequency	50/60 Hz	
Accuracy	± 0.1 Hz	
Resolution	0.1 Hz	
Power and Energy		
Accuracy	1% of reading (ANSI C12.1)	
Isolation		
All inputs and outputs are galvanically isolated to 2500 V.		
Environmental Ratings		
Operating temperature	–20 °C to +50 °C	
Storage temperature	–20 °C to +50 °C	
Operating humidity	5 to 95% RH noncondensing	
Sensing Method		
Voltage, current	True rms	
Sampling rate	13.02K samples per second	
Update Rate		
Watts, VAR and VA	1.03 sec at 60 Hz	
All other parameters	1.07 sec at 60 Hz	
Power Supply (External)		
DC voltage	18–30 Vdc	
Maximum current	30.0 mA at 24 Vdc	
Burden	0.72W	
Standard Communication Format		
Connection type	Three-wire RS-485 (A, B, Common)	
Com port baud rate	9600 or 19,200 bauds	Default: 19,200 bauds
Modbus address range	01–247	
Data format	Selectable (8, N, 1 | 8, N, 2 | 8, Even, 1 | 8, Odd, 1)	Default: 8, N, 2
Protocols	Modbus RTU	
Internal termination resistor selectable ON or OFF	Via DIP switch	Default: Enabled

Dimensions and Weights

Approximate Dimensions in Inches (mm)

FD Three-Pole with PM3 Modbus

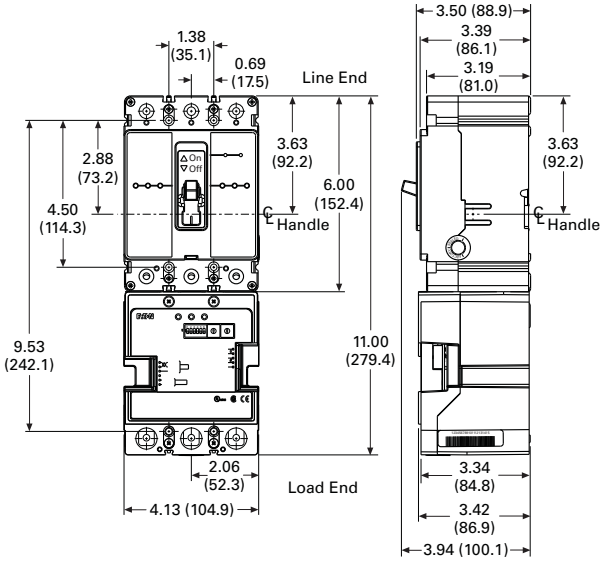

JG Three-Pole with PM3 Modbus

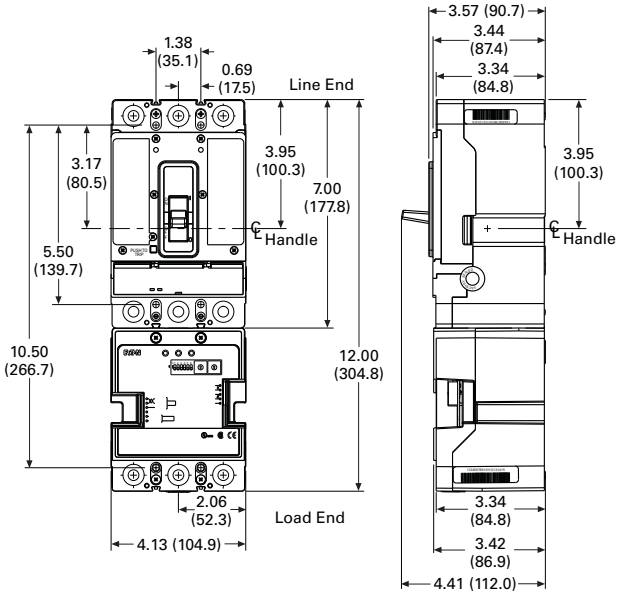

KD Three-Pole with PM3 Modbus

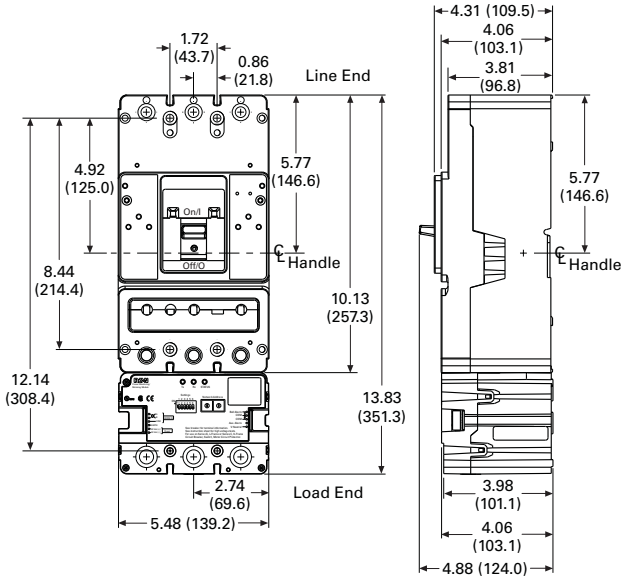

LG Three-Pole with PM3 Modbus

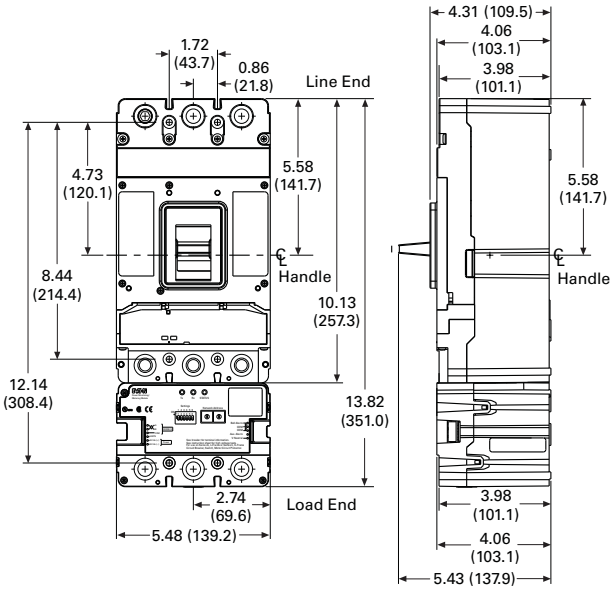

PM3 Dimensions and Shipping Weights

Description	Frame	Dimensions and Weights
Weight in lbs (kg)	FD	1.26 (0.57)
	JG	1.60 (0.73)
	KD/LG	2.25 (1.02)
Basic unit in inches (mm)	FD	4.13 W x 5.00 L x 3.39 H (104.9 x 127.0 x 86.1)
	JG	4.13 W x 5.00 L x 3.39 H (104.9 x 127.0 x 86.1)
	KD/LG	5.48 W x 3.70 L x 4.06 H (139.2 x 94.0 x 103.2)
Shipping container dimensions in inches (mm)	FD/JG	8.00 x 5.13 x 5.50 (203.2 x 130.3 x 139.7)
	KD/LG	6.25 x 8.25 x 7.00 (158.7 x 209.5 x 177.8)

Engine Generator Circuit Breakers

Contents

Description	*Page*
Engine Generator Circuit Breakers	
Catalog Number Selection	**V4-T2-342**
Product Selection	**V4-T2-343**
Accessories Selection Guide and Ordering Information	**V4-T2-345**
Options and Accessories	**V4-T2-345**
Technical Data and Specifications	**V4-T2-346**
Dimensions and Weights	**V4-T2-346**
Direct Current Circuit Breakers	**V4-T2-347**
PVGard Solar Circuit Breakers—600 Vdc Per-Pole and 1000 Vdc Poles-in-Series	**V4-T2-361**
E^2 Mining Service Circuit Breakers	**V4-T2-374**
E2VAC Mining Vacuum Circuit Breaker	**V4-T2-400**
Classic Mining Breakers	**V4-T2-403**
Add-On Ground Fault Protection—Type GFR	**V4-T2-417**

Learn Online Drawings Online

Engine Generator Circuit Breakers

Product Description

Eaton's engine generator molded case circuit breakers are designed specifically for application on diesel engine powered standby generators where high interrupting circuit breakers are not required. The JG through NG breakers are equipped with a special trip unit, that includes standard thermal (overload) protection and special low magnetic pickup range (FG includes a fixed thermal-magnetic pickup). The standard thermal trip unit provides overload protection for conductors per the National Electrical Code®. The low magnetic pickup range is approximately two to five times the continuous rating and provides closer low-level short-circuit protection when applied on generators that have very low short-circuit capacity. This combination allows the user to customize the breaker to the generator output.

Application Description

Engine generator circuit breakers are suitable for reverse feed application.

Standards and Certifications

Engine generator molded case circuit breakers are designed to conform with the following standards:

- Underwriters Laboratories Standard UL 489, Molded Case Circuit Breakers and Circuit Breaker Enclosures File E7819
- Canadian Standards Association Standard C22.2 No. 5, Service Entrance and Branch Circuit Breakers
- International Electrotechnical Commission Recommendations IEC 947-2, Circuit Breakers

Listed

Conformance with these standards satisfies most local and international codes, assuming user acceptability and simplified application.

Catalog Number Selection

This information is presented only as an aid to understanding catalog numbers. It is not to be used to build catalog numbers for circuit breakers.

- FG breakers include both line and load side terminals
- JG, KG, LG and NG breakers with **W** catalog number suffix do not include any terminals
- JG, KG, LG and NG breakers without **W** catalog number suffix include both line and load terminals
- Contact Eaton for additional ratings and internal/external accessories
- Reverse feed

Circuit Breakers FG, JG, KG, LG and NG

FG 3 100 W

Frame	Number of Poles	Trip Amperes	Suffix
FG	**3** = Three-pole	015 020 025 030 035 040 045 050 060 070 080 090 100 125 150 175 200 225	**W** = Without terminals
JG		175 200 225 250	
KG		300 350 400	
LG		450 500 600	
NG		700 800 900 1000 1200	

Product Selection

The following table lists FG through NG engine generator breakers with the maximum generator kVA and kW rating. Engine generator breakers are applied at 115% of the generator full load current rating (FLA). The maximum kW rating is based on three-phase generators at 80% power factor.

Thermal-Magnetic

	Maximum Generator Rating 60 Hz						Engine Generator Breaker ③
	240 Vac		480 Vac		600 Vac		
Magnetic Pickup Range	kVA ①	kW ②	kVA ①	kW ②	kVA ①	kW ②	Catalog Number
Fixed	5	4	11	9	14	11	**FG3015** ④
Fixed	7	6	14	12	18	14	**FG3020** ④
Fixed	9	7	18	14	23	18	**FG3025** ④
Fixed	11	9	22	17	27	22	**FG3030** ④
Fixed	13	10	25	20	32	25	**FG3035** ④
Fixed	14	12	29	23	36	29	**FG3040** ④
Fixed	16	13	32	26	41	32	**FG3045** ④
Fixed	18	14	36	29	45	36	**FG3050** ④
Fixed	22	17	43	35	54	43	**FG3060** ④
Fixed	25	20	51	40	63	51	**FG3070** ④
Fixed	29	23	58	46	72	58	**FG3080** ④
Fixed	32	26	65	52	81	65	**FG3090** ④
Fixed	36	29	72	58	90	72	**FG3100** ④
Fixed	40	32	79	64	99	79	**FG3110** ④
Fixed	45	36	90	72	113	90	**FG3125** ④
Fixed	54	43	108	87	135	108	**FG3150** ④
Fixed	63	51	126	101	158	126	**FG3175** ④
Fixed	72	58	144	116	181	144	**FG3200** ④
Fixed	81	65	162	130	203	162	**FG3225** ④
350–700	63	51	126	101	158	126	**JG3175W** ⑤
350–700	63	51	126	101	158	126	**JG3175** ④
350–700	72	58	144	116	181	144	**JG3200W** ⑤
350–700	72	58	144	116	181	144	**JG3200** ④
350–700	81	65	162	130	203	162	**JG3225W** ⑤
350–700	81	65	162	130	203	162	**JG3225** ④
350–700	90	72	181	144	226	181	**JG3250W** ⑤
350–700	90	72	181	144	226	181	**JG3250** ④
500–1000	108	87	217	173	271	217	**KG3300W** ⑤
500–1000	108	87	217	173	271	217	**KG3300** ④
500–1000	126	101	253	202	316	253	**KG3350W** ⑤
500–1000	126	101	253	202	316	253	**KG3350** ④
1000–2000	144	116	289	231	361	289	**KG3400** ④

Notes

① Breaker continuous current is based on 115% of the generator full load ampere rating.
② Based on three-phase generators at 80% power factor.
③ FG, JG, KG include thermal-magnetic trip units, LG and NG include electronic trip units.
④ Breaker includes line and load terminals.
⑤ Without terminals.

The following catalog numbers have center tap studs for dual voltage applications: JG3070CT, JG3100CT, JG3125CT, KG3175CT, LG3300CTW.

Electronic

Magnetic Pickup Range	Maximum Generator Rating 60 Hz 240 Vac kVA ①	kW ②	480 Vac kVA ①	kW ②	600 Vac kVA ①	kW ②	Engine Generator Breaker ③ Catalog Number
500–2500	162	130	325	260	406	325	**LG3450** ④
500–2500	181	144	361	289	451	361	**LG3500** ④
500–2500	217	173	433	347	542	433	**LG3600** ④
500–2500	253	202	505	404	632	505	**NG3700** ④
500–2500	289	231	578	462	722	578	**NG3800** ④
1250–5000	325	260	650	520	812	650	**NG3900** ④
1250–5000	361	289	722	578	903	722	**NG31000** ④
1250–5000	433	347	867	693	1083	867	**NG31200** ④

Notes

① Breaker continuous current is based on 115% of the generator full load ampere rating.
② Based on three-phase generators at 80% power factor.
③ FG, JG, KG include thermal-magnetic trip units, LG and NG include electronic trip units.
④ Breaker includes line and load terminals.

The following catalog numbers have center tap studs for dual voltage applications: JG3070CT, JG3100CT, JG3125CT, KG3175CT, LG3300CTW.

Accessories Selection Guide and Ordering Information

Enclosures

Type 1 General Purpose

- Surface or flush mounting
- 15–1200 ampere range
- 600 Vac, 500 Vdc

Type 1 enclosed breakers are designed for use in commercial buildings, apartment buildings and other areas where a general purpose enclosure is applicable. The breaker is front operable and is capable of being padlocked in either the ON or OFF position. Ratings through 1200 amperes are listed with Underwriters Laboratories as approved for service entrance application. Both surface and flush mounted enclosures are available.

Type 3R Rainproof Surface Mounting

- Interchangeable hubs (through 400 amperes)
- 15–1200 ampere range
- 600 Vac, 500 Vdc

This general purpose outdoor service center employs a circuit breaker inside a weatherproof sheet steel breaker enclosure to serve as a main disconnect and protective device for feeder circuits. Ratings through 1200 amperes are listed by Underwriters Laboratories as suitable for service entrance application.

Type 12 Dustproof Surface Mounting

- No knockouts or other openings
- 15–1200 ampere range
- 600 Vac, 500 Vdc

The Type 12 enclosure is designed in line with specifications for special industry applications where unusually severe conditions involving oil, coolant, dust and other foreign materials exist in the operating atmosphere. The handle padlocks in the OFF position and the cover is interlocked with the handle mechanism to prevent opening the cover with the circuit breaker in the ON position. Ratings through 1200 amperes are listed by Underwriters Laboratories as suitable for service entrance application.

Enclosure Selection Data

Breaker Frame Amperes	Enclosure Type Class	Catalog Number
FG 15–225	Type 1	**SFDN225**
	Type 3R	**RFDN225**
	Type 12	**JFDN225**
JG 175–250	Type 1	**SJDN250**
	Type 3R	**RJDN250**
	Type 12	**JJDN250**
KG 300–400	Type 1	**SKDN400**
	Type 3R	**RKDN400**
	Type 12	**JKDN400**
LG 450–600	Type 1	**SLDN600**
	Type 3R	**RLDN600**
	Type 12	**JLDN600**
NG 700–1200	Type 1	**SNDN1200**
	Type 3R	**RNDN1200**
	Type 12	**JNDN1200**

Options and Accessories

Standard Terminals

Breaker Frame	Max. Amp Rating	AWG Wire Range	Metric Wire Range mm^2	Catalog Number
FG	100	14–1/0	2.5–50	**3T100FB** ①
FG	150	4–4/0	25–95	**3TA225FD** ①
JG	250	4–350 kcmil	25–185	**TA250KB**
KG	350	250–500 kcmil	120–240	**TA350K**
KG	400	3/0–250 kcmil (2)	95–120	**3TA400K** ①
LG	600	250–500 kcmil (2)	120–240	**3TA603LDK**
NG	700	1–500 kcmil (2)	50–300	**TA700NB1**
NG	1000	3/0–400 kcmil (3)	95–185	**TA1000NB1**
NG	1200	4/0–500 kcmil (4)	120–300	**TA1200NB1**

Neutral Kits, Insulated and Groundable

Max. Enclosure Rating (Amperes)	Main Lug Number Size Cu/Al	Ground Lug Size Cu/Al	Catalog Number
100	(1) 14–1/0	(1) 14–1/0	**INK100**
250	(1) 6–350 kcmil	(1) 4–300 kcmil	**INK250**
400	(1) 4–750 kcmil or (2) 1/0–250 kcmil	(1) 4–300 kcmil	**INK400**
600	(2) 250–500 kcmil	(1) 4–300 kcmil	**INK600**
1200	(3) 1/0 to 750 kcmil or (4) 1/0 to 750 kcmil	(1) 6–250 kcmil	**INK1200**

Internal Accessories

Auxiliary Switch ②

		1A-1B		2A-2B
Breaker Frame	Factory Mounted	Field Kit Catalog Number	Factory Mounted	Field Kit Catalog Number
FG ③	A06	**A1X1PK**	A13	**A2X1RPK**
JG	A06	**A1X2PK**	A13	**A2X2PK**
KG	A06	**A1X3PK**	A13	**A2X3PK**
LG	A06	**A1X4PK**	A13	**A2X4PK**
NG	A06	**A1X5PK**	A13	**A2X5PK**

Shunt Trip ②

Breaker Frame	Rating	Factory Mounted	Field Kit Catalog Number
FG ③	12–24 Vdc	S02	**SNT1LP03K**
JG	12–24 Vdc	S42	**SNT2P04K**
KG	12–24 Vdc	S42	**SNT3P04K**
LG	12–24 Vdc	S02	**SNT4LP03K**
NG	12–24 Vdc	S02	**SNT5LP03K**

Notes

① Package of three terminals.
② Other accessories are available. Same as standard frame breakers.
③ Field installation on the FG Frame is not UL listed.

Technical Data and Specifications

UL 489 Interrupting Capacity Ratings

Volts AC (50/60 Hz)	Interrupting Capacity (Symmetrical Amperes)
240	18,000
480	14,000
600	10,000

IEC 947-2 Interrupting Capacity Ratings

Volts AC (50/60 Hz)	Interrupting Capacity (Symmetrical Amperes)
220, 240	18,000/9,000
380, 415	14,000/7,000
660, 690	18,000/9,000 14,000/7,000 10,000/5,000

Dimensions and Weights

Approximate Dimensions in Inches (mm)

Enclosure Selection Data

Breaker Frame Amperes	Enclosure Type Class	A	B	C	D	E	Approx. Weight Lbs (kg)	Conduit Sizes, Inches	Catalog Number
FG 15–225	Type 1	23.25 (590.6)	8.41 (213.6)	6.28 (159.5)	18.75 (476.3)	1.20 (30.5)	15 (7)	0.25, 0.50, 0.75, 1, 1.25, 1.50, 2, 2.50	**SFDN225**
	Type 3R	25.66 (651.8)	8.84 (224.7)	9.31 (236.5)	24.28 (616.7)	1.70 (43.2)	19 (9)	0.25, 0.50, 0.75, 1, 1.25, 1.50, 2, 2.50	**RFDN225**
	Type 12	25.66 (651.8)	8.84 (224.7)	9.31 (236.5)	24.28 (616.7)	1.70 (43.2)	18 (8)	—	**JFDN225**
JG 175–250	Type 1	34.70 (881.4)	10.92 (277.4)	7.20 (182.9)	30.00 (762.0)	1.88 (47.8)	31 (14)	0.25, 0.50, 2, 2.50, 3	**SJDN250**
	Type 3R	37.50 (952.5)	11.56 (293.6)	10.22 (259.6)	35.77 (908.6)	1.94 (49.3)	40 (18)	0.25, 0.50, 2, 2.50, 3	**RJDN250**
	Type 12	37.53 (953.3)	11.56 (293.6)	10.22 (259.6)	35.77 (908.6)	1.94 (49.3)	37 (17)	—	**JJDN250**
KG 300–400	Type 1	38.81 (985.8)	11.06 (280.9)	10.94 (277.9)	34.00 (863.6)	2.28 (57.9)	53 (24)	0.25, 0.50, 0.75, 1.50, 2, 2.50, 3, 3.50	**SKDN400**
	Type 3R	41.69 (1058.9)	11.75 (298.5)	14.06 (357.1)	39.90 (1013.5)	1.97 (50.0)	60 (27)	0.25, 0.50, 0.75, 2.50, 3, 3.50	**RKDN400**
	Type 12	41.69 (1058.9)	11.75 (298.5)	14.06 (357.1)	39.90 (1013.5)	1.97 (50.0)	53 (24)	—	**JKDN400**
LG 450–600	Type 1	45.88 (1165.4)	14.31 (363.5)	12.38 (314.5)	46.56 (1182.6)	1.91 (48.5)	81 (37)	0.25, 0.50, 0.75, 3, 3.50, 4	**SLDN600**
	Type 3R	48.31 (1227.1)	14.91 (378.7)	15.50 (393.7)	46.56 (1182.6)	1.92 (48.8)	84 (38)	0.25, 0.50, 0.75, 3, 3.50, 4	**RLDN600**
	Type 12	48.31 (1227.1)	14.91 (378.7)	15.50 (393.7)	46.56 (1182.6)	1.92 (48.8)	81 (37)	—	**JLDN600**
NG 700–1200	Type 1	61.22 (1555.0)	21.44 (544.6)	15.41 (391.4)	61.84 (1570.7)	1.97 (50.0)	178 (81)	—	**SNDN1200**
	Type 3R	63.59 (1615.2)	22.00 (558.8)	17.63 (447.8)	61.84 (1570.7)	1.97 (50.0)	175 (79)	—	**RNDN1200**
	Type 12	63.59 (1615.2)	22.00 (558.8)	17.63 (447.8)	61.84 (1570.7)	1.97 (50.0)	170 (77)	—	**JNDN1200**

Type 1 Surface Mounted

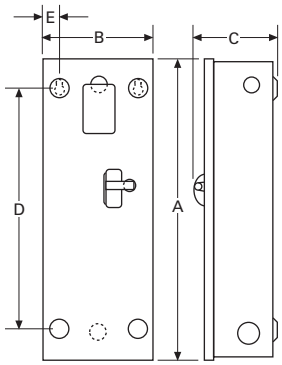

Type 3R Rainproof

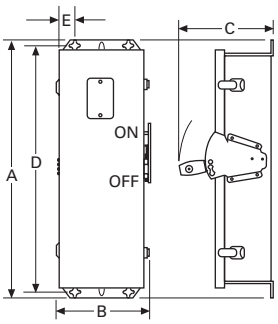

Type 12, 12K Dustproof

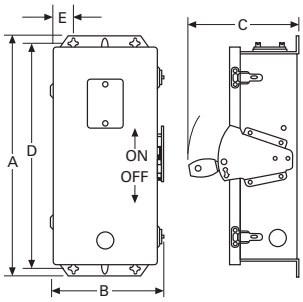

Direct Current Circuit Breakers

Contents

Description	*Page*
Engine Generator Circuit Breakers	**V4-T2-341**
Direct Current Circuit Breakers	
Catalog Number Selection	**V4-T2-349**
Product Selection	**V4-T2-350**
Accessories	**V4-T2-357**
Wiring Diagrams	**V4-T2-359**
Dimensions	**V4-T2-360**
PVGard Solar Circuit Breakers—600 Vdc Per-Pole and 1000 Vdc Poles-in-Series	**V4-T2-361**
E^2 Mining Service Circuit Breakers	**V4-T2-374**
E2VAC Mining Vacuum Circuit Breaker	**V4-T2-400**
Classic Mining Breakers	**V4-T2-403**
Add-On Ground Fault Protection—Type GFR	**V4-T2-417**

Direct Current Circuit Breakers

Product Description

DC (direct current) systems and applications are becoming commonplace as alternative energy sources have expanded and the number of DC devices and data centers using DC power has swelled.

Eaton offers molded case circuit breakers and switches to meet circuit protection and switching requirements for a host of different DC end user requirements. Applications include UPS battery supply circuits, solar systems and electric vehicle charging, as well as commercial and industrial distribution.

Current ratings are available from 15 to 3000 A, with a full scale of voltage and interrupting ratings to address needs ranging from standard to the highest performance. Optional internal accessories provide remote tripping and indication of breaker status.

The DC breaker family is UL 489 listed and exceeds the requirements in UL 489 Supplement SC for UPS applications. Eaton breakers may be applied in both ungrounded and select grounded applications, with poles connected in series to operate at the maximum voltages shown on **Page V4-T2-348**. To use DC circuit breakers on 600 V grounded systems, three poles in series must be connected on the ungrounded leg.

All DC breakers use the same internal and external accessories as their corresponding Series C and Series G AC frame equivalents, except for the NBDC breaker, which uses the same internal and external accessories as the standard NB frame.

The HFDDC through HMDLDC and EG to RG DC breakers use the same internal and external accessories as their corresponding Series C and Series G AC Frame equivalents. NBDC uses the same internal and external accessories as standard NB breakers.

Many of the Eaton AC molded case circuit breakers carry 250 Vdc ratings for ungrounded systems. Refer to **Pages V4-T2-9** and **V4-T2-118** for these interrupting tables.

Quick Reference Direct Current Circuit Breakers

UL 489 Interrupting Capacity Ratings

Circuit Breaker Type	Maximum Amperes	Interrupting Capacity (kA) Volts DC ① 125	Poles in Series	250 ②	Poles in Series	500	600	Poles in Series	750 ②	Poles in Series
EGEDC	100	10	1	35	2	35	—	3	—	—
EGSDC	100	35	1	42	2	50	—	3	—	—
EGHDC	100	42	1	50	2	65	—	3	—	—
HFDDC	225	42	1	50	2	—	42	3	42	4
JGEDC	250	35	1	35	2	—	35	3	—	—
JGSDC	250	42	1	42	2	—	50	3	—	—
JGHDC	250	50	1	50	2	—	65	3	—	—
HJDDC	250	42	1	50	2	—	42	3	—	—
HKDDC	400	42	1	50	2	—	42	3	—	—
LGEDC	600	22	1	22	2	—	35	3	—	—
LGSDC	600	22	1	22	2	—	50	3	—	—
LGHDC	600	50	1	50	2	—	65	3	—	—
HLDDC	600	42	1	50	2	—	35	3	—	—
HLDDC ③	1200	42	1	50	2	—	—	—	—	—
HMDLDC	800	42	1	50	2	—	35	3	—	—
NBDC	1200	42	1	50	2	—	50	3	—	—
RGHDC	3000	42	1	50	2	—	65	3	—	—

IEC 60947-2 Interrupting Capacity Ratings

Circuit Breaker Type	Maximum Amperes	125 Volts DC Icu	Ics	Poles in Series	250 Volts DC Icu	Ics	Poles in Series	600 Volts DC Icu	Ics	Poles in Series
EGEDC	100	10	10	1	10	10	2	—	—	—
EGSDC	100	35	35	1	35	35	2	—	—	—
EGHDC	100	42	42	1	42	42	2	—	—	—
JGEDC	250	22	22	1	22	22	2	—	—	—
JGSDC	250	22	22	1	22	22	2	—	—	—
JGHDC	250	42	42	1	42	42	2	—	—	—
HJDDC	250	—	—	—	—	—	—	20	10	3
LGEDC	600	22	22	1	22	22	2	—	—	—
LGSDC	600	22	22	1	22	22	2	—	—	—
LGHDC	600	42	42	1	42	42	2	—	—	—
HLDDC	600	—	—	—	—	—	—	20	10	3
HMDLDC	800	—	—	—	—	—	—	20	10	3

Notes

① DC ratings apply to substantially non-inductive circuits. Time constants per UL 489.

② EGEDC through HMDLDC have been tested up to 300 Vdc to allow for battery charging voltages. 750 Vdc is common in transportation applications. HFDDC, four-pole 750 Vdc is available up to 150 A maximum. 300 Vdc and 750 Vdc are not UL 489 listed voltage ratings.

③ Four-pole frame with two-poles connected in parallel.

See **Page V4-T2-359** for series connection diagrams. Use NEC rated cable to connect/short poles in series as shown.

Catalog Number Selection

This information is presented only as an aid to understanding catalog numbers.
It is not to be used to build catalog numbers for circuit breakers or trip units.

DC Circuit Breaker

HFDDC 3 150 W

Frame	
EGEDC	= Series G—E (100 A max.)
EGSDC	= Series G—E (100 A max.)
EGHDC	= Series G—E (100 A max.)
HFDDC	= Series C—F (225 A max.)
JGEDC	= Series G—J (250 A max.)
JGSDC	= Series G—J (250 A max.)
JGHDC	= Series G—J (250 A max.)
HJDDC	= Series C—J (250 A max.)
HKDDC	= Series C—K (400 A max.)
LGEDC	= Series G—L (600 A max.)
LGSDC	= Series G—L (600 A max.)
LGHDC	= Series G—L (600 A max.)
HLDDC	= Series C—L (1200 A max.)
HMDLDC	= Series C—M (800 A max.)
NBDC	= NB (1200 A max.)
RGHDC	= Series G—R (3000 A max.)

Number of Poles
1 = Single-pole
2 = Two-pole
3 = Three-pole
4 = Four-pole

Trip Unit Ampere Rating	
015	= 15 A
020	= 20 A
025	= 25 A
030	= 30 A
035	= 35 A
040	= 40 A
045	= 45 A
050	= 50 A
060	= 60 A
070	= 70 A
080	= 80 A
090	= 90 A
100	= 100 A
110	= 110 A
125	= 125 A
150	= 150 A
175	= 175 A
200	= 200 A
225	= 225 A
250	= 250 A
300	= 300 A
350	= 350 A
400	= 400 A
450	= 450 A
500	= 500 A
600	= 600 A
700	= 700 A
800	= 800 A
900	= 900 A
1000	= 1000 A
1200	= 1200 A
1600	= 1600 A
2000	= 2000 A
2500	= 2500 A
3000	= 3000 A

Suffix	
Series C, NB Frames	
K	= Molded case switch
L	= Line and load terminals, F-Frame
MW	= 135% magnetic trip unit, without terminals
W	= Without terminals
Series G Frames	
FFG	= Fixed thermal, fixed magnetic trip unit, with terminals
FFW	= Fixed thermal, fixed magnetic trip unit, without terminals
FAG	= Fixed thermal, adjustable magnetic trip unit, with terminals
FAW	= Fixed thermal, adjustable magnetic trip unit, without terminals
KSG	= Molded case switch, with terminals
KSW	= Molded case switch, without terminals

Product Selection

Type EGEDC DC Circuit Breakers—Three-Pole High Interrupting Capacity 35 kAIC at 500 Vdc

Maximum Continuous Ampere Rating at 40 °C	Complete Circuit Breaker with Terminals Catalog Number	Complete Circuit Breaker without Terminals Catalog Number
25	EGEDC3025FFG	EGEDC3025FFW
30	EGEDC3030FFG	EGEDC3030FFW
35	EGEDC3035FFG	EGEDC3035FFW
40	EGEDC3040FFG	EGEDC3040FFW
45	EGEDC3045FFG	EGEDC3045FFW
50	EGEDC3050FFG	EGEDC3050FFW
60	EGEDC3060FFG	EGEDC3060FFW
70	EGEDC3070FFG	EGEDC3070FFW
80	EGEDC3080FFG	EGEDC3080FFW
90	EGEDC3090FFG	EGEDC3090FFW
100	EGEDC3100FFG	EGEDC3100FFW

Type EGSDC DC Circuit Breakers—Three-Pole High Interrupting Capacity 50 kAIC at 500 Vdc

Maximum Continuous Ampere Rating at 40 °C	Complete Circuit Breaker with Terminals Catalog Number	Complete Circuit Breaker without Terminals Catalog Number
25	EGSDC3025FFG	EGSDC3025FFW
30	EGSDC3030FFG	EGSDC3030FFW
35	EGSDC3035FFG	EGSDC3035FFW
40	EGSDC3040FFG	EGSDC3040FFW
45	EGSDC3045FFG	EGSDC3045FFW
50	EGSDC3050FFG	EGSDC3050FFW
60	EGSDC3060FFG	EGSDC3060FFW
70	EGSDC3070FFG	EGSDC3070FFW
80	EGSDC3080FFG	EGSDC3080FFW
90	EGSDC3090FFG	EGSDC3090FFW
100	EGSDC3100FFG	EGSDC3100FFW

Type EGHDC DC Circuit Breakers—Three-Pole High Interrupting Capacity 65 kAIC at 500 Vdc

Maximum Continuous Ampere Rating at 40 °C	Complete Circuit Breaker with Terminals Catalog Number	Complete Circuit Breaker without Terminals Catalog Number
25	EGHDC3025FFG	EGHDC3025FFW
30	EGHDC3030FFG	EGHDC3030FFW
35	EGHDC3035FFG	EGHDC3035FFW
40	EGHDC3040FFG	EGHDC3040FFW
45	EGHDC3045FFG	EGHDC3045FFW
50	EGHDC3050FFG	EGHDC3050FFW
60	EGHDC3060FFG	EGHDC3060FFW
70	EGHDC3070FFG	EGHDC3070FFW
80	EGHDC3080FFG	EGHDC3080FFW
90	EGHDC3090FFG	EGHDC3090FFW
100	EGHDC3100FFG	EGHDC3100FFW

HFDDC

Type HFDDC DC Circuit Breakers—Three-Pole High Interrupting Capacity 42 kAIC at 600 Vdc

Maximum Continuous Ampere Rating at 40 °C	Complete Circuit Breaker with Line and Load Terminals ① Single-Pole Catalog Number	Two-Pole Catalog Number	Three-Pole Catalog Number	Four-Pole Catalog Number
15	HFDDC1015L	HFDDC2015L	HFDDC3015L	HFDDC4015L
20	HFDDC1020L	HFDDC2020L	HFDDC3020L	HFDDC4020L
25	HFDDC1025L	HFDDC2025L	HFDDC3025L	HFDDC4025L
30	HFDDC1030L	HFDDC2030L	HFDDC3030L	HFDDC4030L
35	HFDDC1035L	HFDDC2035L	HFDDC3035L	HFDDC4035L
40	HFDDC1040L	HFDDC2040L	HFDDC3040L	HFDDC4040L
45	HFDDC1045L	HFDDC2045L	HFDDC3045L	HFDDC4045L
50	HFDDC1050L	HFDDC2050L	HFDDC3050L	HFDDC4050L
60	HFDDC1060L	HFDDC2060L	HFDDC3060L	HFDDC4060L
70	HFDDC1070L	HFDDC2070L	HFDDC3070L	HFDDC4070L
80	HFDDC1080L	HFDDC2080L	HFDDC3080L	HFDDC4080L
90	HFDDC1090L	HFDDC2090L	HFDDC3090L	HFDDC4090L
100	HFDDC1100L	HFDDC2100L	HFDDC3100L	HFDDC4100L
110	HFDDC1110L	HFDDC2110L	HFDDC3110L	HFDDC4110L
125	HFDDC1125L	HFDDC2125L	HFDDC3125L	HFDDC4125L
150	HFDDC1150L	HFDDC2150L	HFDDC3150L	HFDDC4150L
175	—	HFDDC2175L	HFDDC3175L	—
200	—	HFDDC2200L	HFDDC3200L	—
225	—	HFDDC2225L	HFDDC3225L	—

Type JGEDC DC Circuit Breakers—Three-Pole High Interrupting Capacity 35 kAIC at 600 Vdc

Maximum Continuous Ampere Rating at 40 °C	Complete Breaker Catalog Number	Circuit Breaker Frame Only ② Catalog Number	Thermal-Magnetic Trip Unit Catalog Number	Standard Terminals Catalog Number
70	JGEDC3070FAG	JGEDC3250NN	JT3070FA	T250FJ
90	JGEDC3090FAG	JGEDC3250NN	JT3090FA	T250FJ
100	JGEDC3100FAG	JGEDC3250NN	JT3100FA	T250FJ
125	JGEDC3125FAG	JGEDC3250NN	JT3125FA	T250FJ
150	JGEDC3150FAG	JGEDC3250NN	JT3150FA	T250FJ
175	JGEDC3175FAG	JGEDC3250NN	JT3175FA	T250FJ
200	JGEDC3200FAG	JGEDC3250NN	JT3200FA	T250FJ
225	JGEDC3225FAG	JGEDC3250NN	JT3225FA	T250FJ
250	JGEDC3250FAG	JGEDC3250NN	JT3250FA	T250FJ

Notes

① For breaker without terminals, replace "L" with "W" at end of catalog number.

② For complete breaker, order individual frame, trip unit and terminals for field installation.

Type JGSDC DC Circuit Breakers—Three-Pole High Interrupting Capacity 50 kAIC at 600 Vdc

Maximum Continuous Ampere Rating at 40 °C	Complete Breaker Catalog Number	Circuit Breaker Frame Only ① Catalog Number	Thermal-Magnetic Trip Unit Catalog Number	Standard Terminals Catalog Number
70	JGSDC3070FAG	JGSDC3250NN	JT3070FA	T250FJ
90	JGSDC3090FAG	JGSDC3250NN	JT3090FA	T250FJ
100	JGSDC3100FAG	JGSDC3250NN	JT3100FA	T250FJ
125	JGSDC3125FAG	JGSDC3250NN	JT3125FA	T250FJ
150	JGSDC3150FAG	JGSDC3250NN	JT3150FA	T250FJ
175	JGSDC3175FAG	JGSDC3250NN	JT3175FA	T250FJ
200	JGSDC3200FAG	JGSDC3250NN	JT3200FA	T250FJ
225	JGSDC3225FAG	JGSDC3250NN	JT3225FA	T250FJ
250	JGSDC3250FAG	JGSDC3250NN	JT3250FA	T250FJ

JGHDC3250NN

Type JGHDC DC Circuit Breakers—Three-Pole High Interrupting Capacity 65 kAIC at 600 Vdc

Maximum Continuous Ampere Rating at 40 °C	Complete Breaker Catalog Number	Circuit Breaker Frame Only ① Catalog Number	Thermal-Magnetic Trip Unit Catalog Number	Standard Terminals Catalog Number
70	JGHDC3070FAG	JGHDC3250NN	JT3070FA	T250FJ
90	JGHDC3090FAG	JGHDC3250NN	JT3090FA	T250FJ
100	JGHDC3100FAG	JGHDC3250NN	JT3100FA	T250FJ
125	JGHDC3125FAG	JGHDC3250NN	JT3125FA	T250FJ
150	JGHDC3150FAG	JGHDC3250NN	JT3150FA	T250FJ
175	JGHDC3175FAG	JGHDC3250NN	JT3175FA	T250FJ
200	JGHDC3200FAG	JGHDC3250NN	JT3200FA	T250FJ
225	JGHDC3225FAG	JGHDC3250NN	JT3225FA	T250FJ
250	JGHDC3250FAG	JGHDC3250NN	JT3250FA	T250FJ

HJDDC3250

Type HJDDC DC Circuit Breakers—Three-Pole High Interrupting Capacity 42 kAIC at 600 Vdc

Maximum Continuous Ampere Rating at 40 °C	Circuit Breaker Frame Only ① Catalog Number	Thermal-Magnetic Trip Unit Catalog Number	Standard Terminals Catalog Number
70	HJDDC3250F	JT3070T	TA250KB
90	HJDDC3250F	JT3090T	TA250KB
100	HJDDC3250F	JT3100T	TA250KB
125	HJDDC3250F	JT3125T	TA250KB
150	HJDDC3250F	JT3150T	TA250KB
175	HJDDC3250F	JT3175T	TA250KB
200	HJDDC3250F	JT3200T	TA250KB
225	HJDDC3250F	JT3225T	TA250KB
250	HJDDC3250F	JT3250T	TA250KB

Note

① For complete breaker, order individual frame, trip unit and terminals for field installation.

HKDDC3400

Type HKDDC DC Circuit Breakers—Three-Pole High Interrupting Capacity 42 kAIC at 600 Vdc

Maximum Continuous Ampere Rating at 40 °C	Circuit Breaker Frame Only ① Catalog Number	Thermal-Magnetic Trip Unit Catalog Number	Standard Terminals Catalog Number
100	HKDDC3400F	KT3100T	TA300K
125	HKDDC3400F	KT3125T	TA300K
150	HKDDC3400F	KT3150T	TA300K
175	HKDDC3400F	KT3175T	TA300K
200	HKDDC3400F	KT3200T	TA300K
225	HKDDC3400F	KT3225T	TA300K
250	HKDDC3400F	KT3250T	TA350K
300	HKDDC3400F	KT3300T	TA350K
350	HKDDC3400F	KT3350T	TA350K
400	HKDDC3400F	KT3400T	3TA400K ②

LGEDC3630NN

Type LGEDC DC Circuit Breakers—Three-Pole High Interrupting Capacity 35 kAIC at 600 Vdc

Maximum Continuous Ampere Rating at 40 °C	Complete Breaker Catalog Number	Circuit Breaker Frame Only ① Catalog Number	Thermal-Magnetic Trip Unit Catalog Number	Standard Terminals Catalog Number
250	LGEDC3250FAG	LGEDC3630NN	LT3250FA	TA350LK
300	LGEDC3300FAG	LGEDC3630NN	LT3300FA	TA350LK
350	LGEDC3350FAG	LGEDC3630NN	LT3350FA	TA350LK
400	LGEDC3400FAG	LGEDC3630NN	LT3400FA	TA350LK
500	LGEDC3500FAG	LGEDC3630NN	LT4500FA	3TA632LK ②
600	LGEDC3600FAG	LGEDC3630NN	LT3600FA	3TA632LK ②

Type LGSDC DC Circuit Breakers—Three-Pole High Interrupting Capacity 50 kAIC at 600 Vdc

Maximum Continuous Ampere Rating at 40 °C	Complete Breaker Catalog Number	Circuit Breaker Frame Only ① Catalog Number	Thermal-Magnetic Trip Unit Catalog Number	Standard Terminals Catalog Number
250	LGSDC3250FAG	LGSDC3630NN	LT3250FA	TA350LK
300	LGSDC3300FAG	LGSDC3630NN	LT3300FA	TA350LK
350	LGSDC3350FAG	LGSDC3630NN	LT3350FA	TA350LK
400	LGSDC3400FAG	LGSDC3630NN	LT3400FA	TA350LK
500	LGSDC3500FAG	LGSDC3630NN	LT4500FA	3TA632LK ②
600	LGSDC3600FAG	LGSDC3630NN	LT3600FA	3TA632LK ②

Notes

① For complete breaker, order individual frame, trip unit and terminals for field installation.

② Three-pole kit.

Type LGHDC DC Circuit Breakers—Three-Pole High Interrupting Capacity 65 kAIC at 600 Vdc

Maximum Continuous Ampere Rating at 40 °C	Complete Breaker Catalog Number	Circuit Breaker Frame Only ① Catalog Number	Thermal-Magnetic Trip Unit Catalog Number	Standard Terminals Catalog Number
250	LGHDC3250FAG	LGHDC3630NN	LT3250FA	TA350LK
300	LGHDC3300FAG	LGHDC3630NN	LT3300FA	TA350LK
350	LGHDC3350FAG	LGHDC3630NN	LT3350FA	TA350LK
400	LGHDC3400FAG	LGHDC3630NN	LT3400FA	TA350LK
500	LGHDC3500FAG	LGHDC3630NN	LT4500FA	3TA632LK ②
600	LGHDC3600FAG	LGHDC3630NN	LT3600FA	3TA632LK ②

HLDDC

Type HLDDC DC Circuit Breakers—Three-Pole High Interrupting Capacity 35 kAIC at 600 Vdc

Maximum Continuous Ampere Rating at 40 °C	Circuit Breaker Frame Only ① Catalog Number	Thermal-Magnetic Trip Unit Catalog Number	Standard Terminals Catalog Number
300	HLDDC3600F	LT3300T	TA602LD
350	HLDDC3600F	LT3350T	TA602LD
400	HLDDC3600F	LT3400T	TA602LD
450	HLDDC3600F	LT3450T	TA602LD
500	HLDDC3600F	LT3500T	TA602LD
600	HLDDC3600F	LT3600T	3TA603LDK ②

Type HLDDC DC Circuit Breakers—Two-Pole High Interrupting Capacity 50 kAIC at 250 Vdc ③④

Maximum Continuous Ampere Rating at 40 °C	Complete Breaker Catalog Number
600	HLDDC20600
700	HLDDC20700
800	HLDDC20800
900	HLDDC20900
1000	HLDDC21000
1200	HLDDC21200

Notes

① For complete breaker, order individual frame, trip unit and terminals for field installation.
② Three-pole kit.
③ Includes breaker frame, trip unit and terminals.
④ Four-pole breaker with two poles wired in parallel.

HMDLDC3800F

Type HMDLDC DC Circuit Breakers—Three-Pole High Interrupting Capacity 35 kAIC at 600 Vdc

Maximum Continuous Ampere Rating at 40 °C	Circuit Breaker Frame Only ① Catalog Number	Thermal-Magnetic Trip Unit Catalog Number	Standard Terminals Catalog Number
300	HMDLDC3800F	MT3300T	TA700MA1
350	HMDLDC3800F	MT3350T	TA700MA1
400	HMDLDC3800F	MT3400T	TA700MA1
450	HMDLDC3800F	MT3450T	TA700MA1
500	HMDLDC3800F	MT3500T	TA700MA1
600	HMDLDC3800F	MT3600T	TA700MA1
700	HMDLDC3800F	MT3700T	TA700MA1
800	HMDLDC3800F	MT3800T	TA800MA2

Type NBDC DC Circuit Breakers—Three-Pole High Interrupting Capacity 50 kAIC at 600 Vdc

Maximum Continuous Ampere Rating at 40 °C	Complete Circuit Breaker Factory Assembled without Terminals ② Catalog Number	Includes Magnetic Trip Unit Calibrated at 135%	Standard Terminals Catalog Number
700	NBDC3700MW	Included	TA1000NB1
800	NBDC3800MW	Included	TA1000NB1
900	NBDC3900MW	Included	TA1000NB1
1000	NBDC31000MW	Included	TA1000NB1
1200	NBDC31200MW	Included	TA1200NB1

RGHDC3300FFWM

Type RGHDC DC Circuit Breakers—Three-Pole High Interrupting Capacity 65 kAIC at 600 Vdc

Maximum Continuous Ampere Rating at 40 °C	Complete Circuit Breaker Factory Assembled ② Imperial Mounting Hardware Catalog Number	Metric Mounting Hardware Catalog Number	Includes Magnetic Trip Unit Calibrated at 135%	Standard Rear Connectors Catalog Number
1600	RGHDC3160FFWE	RGHDC3160FFWM	Included	B2016RDM
2000	RGHDC3200FFWE	RGHDC3200FFWM	Included	B2016RDM
2500	RGHDC3250FFWE	RGHDC3250FFWM	Included	B2500RDM
3000	RGHDC3300FFWE	RGHDC3300FFWM	Included	B3000RDM

Notes

① Includes frame and trip unit. Order terminals or connectors separately.

② Six rear connectors included as standard complete circuit breaker.

DC Breaker Terminal Wire Ranges

Breaker Frame	Maximum Breaker Ampacity	Terminal Body Material	Wire Type	AWG Wire Range/ Number of Conductors	Metric Wire Range mm²	Number of Terminals Included	Standard Terminal Catalog Number
EGEDC, EGSDC, EGHDC	100	Aluminum	Cu/Al	14–1/0	2.5–50	3	**3TA125EF**
HFDDC	20	Steel	Cu/Al	14–10 (1)	2.5–4 (1)	3	**3T20FB**
	100	Steel	Cu/Al	14–1/0 (1)	2.5–50 (1)	3	**3T100FB**
	225	Aluminum	Cu/Al	4–4/0 (1)	25–95 (1)	3	**3TA225FD**
JGEDC, JGSDC, JGHDC	250	Stainless steel	Cu	4–350 (1)	25–185 (1)	1	**T250FJ**
HJDDC	250	Aluminum	Cu/Al	4–350 kcmil (1)	25–185 (1)	1	**TA250KB**
HKDDC	225	Aluminum	Cu/Al	3–350 kcmil (1)	35–185 (1)	1	**TA300K**
	350	Aluminum	Cu/Al	250–500 kcmil (1)	120–240 (1)	1	**TA350K**
	400	Aluminum	Cu/Al	3/0–250 kcmil (2)	95–120 (1)	3	**3TA400K**
LGEDC, LGSDC, LGHDC	400	Aluminum	Cu/Al	2–500 (1)	35–240 (1)	1	**TA350LK**
	630	Aluminum	Cu/Al	2–500 kcmil (2)	35–240 (2)	1	**TA632L**
	630	Aluminum	Cu/Al	2–500 kcmil (2)	35–240 (2)	3	**3TA632LK**
HLDDC	500	Aluminum	Cu/Al	3/0–350 kcmil (2)	95–150 (2)	1	**TA602LD**
	600	Aluminum	Cu/Al	400–500 kcmil (2)	185–240 (2)	3	**3TA603LDK**
HMDLDC	600	Aluminum	Cu/Al	1–500 kcmil (2)	—	1	**TA700MA1**
	800	Aluminum	Cu/Al	3/0–400 kcmil (3)	—	1	**TA800MA2**
NBDC	700	Aluminum	Cu/Al	3/0–400 kcmil (3)	95–185 (3)	1	**TA1000NB1**
	800	Aluminum	Cu/Al	3/0–400 kcmil (3)	95–185 (3)	1	**TA1000NB1**
	900	Aluminum	Cu/Al	3/0–400 kcmil (3)	95–185 (3)	1	**TA1000NB1**
	1000	Aluminum	Cu/Al	3/0–400 kcmil (3)	95–185 (3)	1	**TA1000NB1**
	1200	Aluminum	Cu/Al	4/0–500 kcmil (4)	120–240 (4)	1	**TA1200NB1**

Note: RGHDC breakers include six rear connectors as standard.

Molded Case Switches

Eaton's DC molded case switches are used in applications requiring a compact, high-capacity disconnect. They are UL 489 listed and have automatic high instantaneous current protection. These devices do not provide overload protection.

Molded Case Switches

Maximum Continuous Ampere Rating at 40 °C	Interrupting Capacity (Volts DC)	Poles in Series	With Line and Load Terminals Catalog Number	Without Line and Load Terminals Catalog Number
600 Vdc Maximum				
100	42	3	**HFDDC3100KL**	**HFDDC3100KW**
150	42	3	**HFDDC3150KL**	**HFDDC3150KW**
225	42	3	**HFDDC3225KL**	**HFDDC3225KW**
250	65	3	**JGKDC3250KSG**	**JGKDC3250KSW**
250	42	3	**HJDDC3250K**	**HJDDC3250KW**
400	35	3	**HKDDC3400K**	**HKDDC3400KW**
	65	3	**LGKDC3400KSG**	**LGKDC3400KSW**
600	65	3	**LGKDC3630KSG**	**LGKDC3630KSW**
	35	3	**HLDDC3600K**	**HLDDC3600WK**
800	35	3	**HMDLDC3800K**	**HMDLDC3800WK**
500 Vdc Maximum				
100	65	3	**EGK3100KSG**	**EGK3100KSW**
250 Vdc Maximum				
100	50	2	**HFDDC2100KL**	**HFDDC2100KW**
150	50	2	**HFDDC2150KL**	**HFDDC2150KW**
225	50	2	**HFDDC2225KL**	**HFDDC2225KW**
1200	50	①	**HLDDC21200K** ①	**HLDDC21200WK** ①

Note

① Four-pole frame with two-pole connected in parallel.

Accessories

Internal Accessories

Description	Factory Installation (HFDDC)	Field Installation Kits								
		HFDDC ①	EGEDC, EGSDC, EGHDC	JGEDC, JGSDC, JGHDC LGEDC, LGSDC, LGHDC	HJDDC	HKDDC	HLDDC	HMDLDC	NBDC	RGHDC
Right-Pole Mounting										
Auxiliary switch										
1A-1B	A06	A1X1PK	AUX1A1BPK	AUX1A1BPK	A1X2PK	A1X3PK	A1X4PK	A1X4PK	4980D16G05	—
2A-2B	A13	A2X1RPK	AUX2A2BPK	AUX2A2BPK	A2X2PK	A2X3PK	A2X4PK	A2X4PK	4980D16G06	A2X6RPK
Alarm switch										
1 make/1 break	B06	A1L1RPK	ALM1M1BEPK	ALM1M1BJPK	A1L2RPK	A1L3RPK	A1L4RPK	A1L4RPK	—	A1L6RPK
Auxiliary and alarm combo										
1A-1B, 1 make/1 break	C05	AAL1RPK	AUXALRMEPK	AUXALRMJPK	AAL2RPK	AAL3RPK	AA114RPK	AA114RPK	—	—
Left-Pole Mounting										
Shunt trip										
12 Vdc	S02	SNT1LP03K	SNT012CPK	SNT012CPK	SNT2P04K	SNT3P04K	SNT4LP03K	SNT4LP03K	2606D58G14	—
24 Vdc	S02	SNT1LP03K	SNT024CPK	SNT024CPK	SNT2P04K	SNT3P04K	SNT4LP03K	SNT4LP03K	2606D58G13	SNT6P03K ②
48 Vdc	S06	SNT1LP08K	SNT4860CPK	SNT4860CPK	SNT2P06K	SNT3P06K	SNT4LP23K	SNT4LP23K	2606D58G12	SNT6P23K ②
60 Vdc	S06	SNT1LP08K	SNT4860CPK	SNT4860CPK	SNT2P06K	SNT3P06K	SNT4LP23K	SNT4LP23K	2606D58G11	SNT6P23K ②
125 Vdc	S10	SNT1LP12K	SNT120CPK	SNT120CPK	SNT2P11K	SNT3P11K	SNT4LP26K	SNT4LP26K	2606D58G10	SNT6P23K ②
250 Vdc	S14	SNT1LP18K	—	—	SNT2P14K	SNT3P14K	SNT4LP14K	SNT4LP14K	2606D58G09	SNT6P14K
120 Vac	S06	SNT1LP12K	SNT120CPK	SNT120CPK	SNT2P11K	SNT3P11K	SNT4LP11K	SNT4LP11K	2060D58G05	SNT6P11K ②
Undervoltage release										
12 Vdc	U30	UVH1LP20K	UVR012DPK	UVR012DPK	UVH2LP20K	UVH3LP20K	UVH4LP20K	UVH4LP20K	372D032G06	UVH6RP20K ②
24 Vdc	U34	UVH1LP21K	UVR024DPK	UVR024DPK	UVH2LP21K	UVH3LP21K	UVH4LP21K	UVH4LP21K	372D032G07	UVH6RP21K ②
48 Vdc	U38	UVH1LP22K	UVR048DPK	UVR048DPK	UVH2LP22K	UVH3LP22K	UVH4LP22K	UVH4LP22K	372D032G08	UVH6RP23K ②
125 Vdc	U42	UVH1LP26K	UVR125DPK	UVR125DPK	UVH2LP26K	UVH3LP26K	UVH4LP26K	UVH4LP26K	372D032G09	UVH6RP26K ②
250 Vdc	U46	UVH1LP28K	UVR250DPK	UVR250DPK	UVH2LP28K	UVH3LP28K	UVH4LP28K	UVH4LP28K	372D032G10	UVH6RP28K ②
120 Vac	U14	UVH1LP08K	UVR120APK	UVR120APK	UVH2LP08K	UVH3LP08K	UVH4LP08K	UVH4LP08K	373D632G05	UVH6RP08K ②

Notes

① F-Frame circuit breakers are factory sealed. Underwriters Laboratories requires that internal accessories be installed at the factory. Internal accessories are UL listed for factory installation under E7819. Where local codes and standards permit and UL listing is not required, internal accessories can be field installed. Accessory installation should be done before the circuit breaker is mounted and connected.

② Right-pole mounted.

One accessory can be mounted per pole, per breaker. Factory installation of accessories is available. Contact Eaton for assistance with part number configuration.

Jumpers

Jumpers must be ordered separately. Priced individually.

HFDDC Frame

Description	Maximum Amperes	Catalog Number
Single copper jumper	60	**DC1F060** ①
	100	**DC1F100** ①
	125	**DC1F125** ①
	225	**DC1F225** ①
Package of 2 aluminum jumpers	100	**DC2FD100A**
Package of 3 aluminum jumpers	100	**DC3FD100A**

JGEDC, JGSDC, JGHDC Frames

Description	Maximum Amperes	Catalog Number
Single aluminum jumper	250	**DC1JG250A** ①
Package of 2 aluminum jumpers	250	**DC2JG250A** ①
Package of 20 aluminum jumpers	250	**DC20JG250A** ①

HKDDC Frame

Description	Maximum Amperes	Catalog Number
Single copper jumper	400	**DC1K400** ①
Package of 2 aluminum jumpers	400	**DC2KD400A** ①
Package of 3 aluminum jumpers	400	**DC3KD400A** ①

LGEDC, LGSDC, LGHDC Frames

Description	Maximum Amperes	Catalog Number
Package of 2 aluminum jumpers	400	**DC2LG400A**
Package of 3 aluminum jumpers	400	**DC3LG400A**
Package of 30 aluminum jumpers	400	**DC30LG400A**

Note

① Not UL Listed; Non UL listed jumpers used in a UL application may need to be qualified by the OEM in their assembly. This may take place with UL or another certified testing agency.

Wiring Diagrams

Series Connection Diagrams for DC Application ①②

250 Vdc Maximum—Two Poles in Series

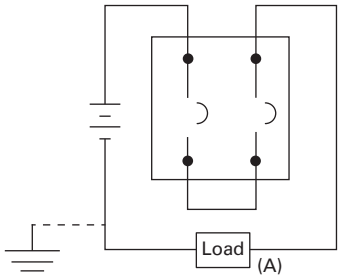

Suitable for use on ungrounded systems, or grounded systems that have one end of load (A) connected to grounded terminal, opposite poles in series connection.

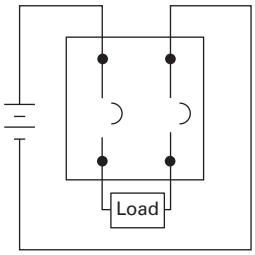

Suitable for use on ungrounded systems only.

500 Vdc or 600 Vdc Maximum—Three Poles in Series

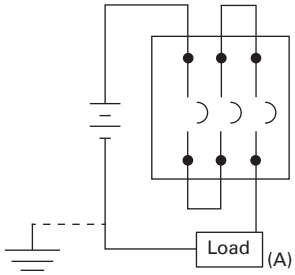

Suitable for use on ungrounded systems, or grounded systems that have one end of load (A) connected to grounded terminal, opposite poles in series connection.

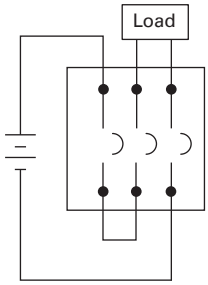

Suitable for use on ungrounded systems only.

750 Vdc Maximum—Four Poles in Series

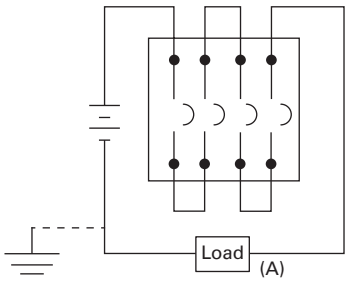

Suitable for use on ungrounded systems, or grounded systems that have one end of load (A) connected to grounded terminal, opposite poles in series connection.

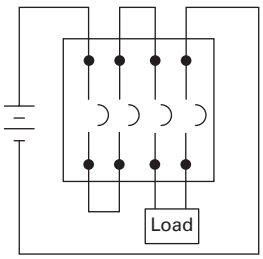

Suitable for use on ungrounded systems only.

Notes

① Poles in series connection is customer supplied. Use rated cable per NEC.

② For grounded systems, all poles in series must be connected on non-grounded terminal, with load connected to grounded terminal.

Dimensions

Approximate Dimensions in Inches (mm)

DC Breaker Dimensions

Frame	Number of Poles	Width	Height	Depth
EGEDC, EGSDC, EGHDC	3	3.00 (76.2)	5.50 (139.7)	2.99 (75.9)
HFDDC	1	1.38 (35.1)	6.00 (152.4)	3.38 (86.0)
	2	2.75 (70.0)	6.00 (152.4)	3.38 (86.0)
	3	4.13 (105.0)	6.00 (152.4)	3.38 (86.0)
	4	5.50 (139.7)	6.00 (152.4)	3.38 (86.0)
JGEDC, JGSDC, JGHDC	3	4.13 (104.9)	7.00 (177.8)	3.57 (90.7)
HJDDC	2, 3	4.13 (105.0)	10.00 (254.0)	4.06 (103.1)
HKDDC	2, 3	5.50 (139.7)	10.13 (257.3)	4.10 (104.1)
LGEDC, LGSDC, LGHDC	3	5.48 (139.2)	10.13 (257.3)	4.09 (103.9)
600 A Max. HLDDC	2, 3	8.25 (209.6)	10.75 (273.1)	4.06 (103.1)
1200 A Max. HLDDC	4	11.00 (279.4)	10.75 (273.1)	4.06 (103.1)
HMDLDC	2, 3	8.25 (209.6)	16.00 (406.4)	4.06 (103.1)
NBDC	3	8.25 (209.6)	16.00 (406.4)	5.50 (139.7)
RGHDC	3	15.50 (393.7)	16.00 (406.4)	9.75 (247.7)

PVGard Solar Photovoltaic Circuit Breakers

600 Vdc Per-Pole

1000 Vdc Poles-in-Series

Contents

Description	*Page*
Engine Generator Circuit Breakers	**V4-T2-341**
Direct Current Circuit Breakers	**V4-T2-347**
PVGard Solar Circuit Breakers—600 Vdc Per-Pole and 1000 Vdc Poles-in-Series	
Application Description	**V4-T2-362**
Features	**V4-T2-362**
Standards and Certifications	**V4-T2-362**
Product Selection	**V4-T2-363**
Accessories	**V4-T2-365**
Technical Data and Specifications	**V4-T2-369**
Dimensions	**V4-T2-372**
Wiring Diagrams	**V4-T2-373**
E^2 Mining Service Circuit Breakers	**V4-T2-374**
Classic Mining Breakers	**V4-T2-403**
Add-On Ground Fault Protection—Type GFR	**V4-T2-417**

PVGard Solar Circuit Breakers—600 Vdc Per-Pole and 1000 Vdc Poles-in-Series

Product Overview

- Two PVGard lineups
  - 600 Vdc per-pole breaker and switch. Each pole rated 600 Vdc
  - 1000 Vdc poles-in-series breaker and switch. Requires poles in series connection
- Both options UL 489B listed for solar photovoltaic circuit protection
- 50 °C calibration
- Offers both 100% and 80% rated breakers
- Handle bi-directional current flow

Product Description

Photovoltaic (PV) systems convert the energy of the sun into electrical power that is fed directly into the electric grid. Within the balance of system (BOS), direct current (DC) circuit breakers protect the wiring connected from the PV modules to the combiner or the inverter, while also behaving as a disconnect.

Eaton is a global leader in circuit protection and brings this expertise to bear in the photovoltaic market. PVGard solar circuit breakers are part of a product family that combines a disconnect with circuit protection in a single, compact, resettable device to protect and isolate DC circuits as needed in photovoltaic systems. PVGard breakers can replace fuses, fuse holders and disconnects in combiner box and inverter applications—saving space, streamlining design, purchasing and receiving, and reducing spare parts requirements.

There are two PVGard lineups to choose from: the industry-exclusive, 600 Vdc per-pole breakers and switches designed for residential and light commercial applications and 1000 Vdc poles-in-series breakers and switches for commercial and utility scale applications.

PVGard 600 Vdc Per-Pole Lineup

Only Eaton can offer this breakthrough breaker that will save significant space, time and cost. As a single-circuit-per-pole device, it allows space savings of up to 66% when compared to traditional poles-in-series disconnects, switches and breakers. In addition, it eliminates the need for jumpers for poles-in-series connection—saving on installation time, labor and even inventory.

PVGard 1000 Vdc Poles-in-Series Lineup

This 1000 Vdc poles-in-series lineup provides reliable and safe disconnect means and overcurrent protection in a single, compact device for commercial and utility scale PV systems. This solution does not require jumpers with the breaker/switch to be a UL 489B listed device, providing reliability and flexibility in design without limitation on implementation of the breaker/switch. If needed, cost-effective Eaton jumpers can be included.

Application Description

Photovoltaic (PV) systems convert the energy of the sun into electrical power that is fed directly into the electric grid. PVGard circuit breakers are used to protect the wiring from the modules to the combiner box or inverter from overcurrents, and to provide an isolation mechanism.

Eaton offers a complete line of UL 489 Listed multi-purpose 600 Vdc poles-in-series breakers and switches, as well as protection for the AC side of the inverter. Refer to **Page V4-T2-347** for 600 Vdc breakers and **Page V4-T2-6** for AC breaker selection.

Features

PVGard breakers are uniquely designed with these features:

- Meets the higher voltage and lower fault current levels of solar systems
- Tested to extreme ambient conditions from –40°C to +90°C
- Full complement of accessories for status, signalling, and on/off operation remotely
- Can handle bi-directional flow of current
- Can be applied in grounded, ungrounded or bi-polar systems
- Meets and exceeds the standards of UL 489B for photovoltaic molded case circuit breakers and molded case switches
- Available both standard (80%-rated) and 100%-rated breakers
- 50°C calibration
- Ability to open on signal from DC arc or ground fault detector
- Wide range of current ratings increases options for matching incoming strings
- Eliminates fuse stocking costs and matching issues

Designed specifically for high- and low-temperature demands of PV installations, PVGard circuit breakers undergo extreme ambient cycling tests, and carry a robust operating temperature range. Trip units calibrate at 100% and 80% of nameplate current in a 50°C ambient, ensuring continuous operation in higher temperature environments typical to solar.

Rigorous third-party testing includes limited and standard fault current tests, electrical and mechanical endurance, di-electric voltage withstand and temperature tests. Eaton's PVGard products are stand-alone devices without requiring jumpers to be UL 489B listed devices.

PVGard breakers are available with a full complement of accessories to provide string status, enable remote trip, on/off operation, and can be customized to site requirements.

Standards and Certifications

- Designed to meet UL 489B for solar photovoltaic circuit protection
- UL File E350638, Category Control Number DIUR

Listed

Product Selection

Catalog number includes breaker frame and trip unit. Order terminals separately. See **Page V4-T2-367**.
For complete internal and external accessories, see accessory section of each frame.

JG PVS Frame

JG PVS Frame, 250 A Maximum, 600 Vdc Per Pole, 1.2 kA ①

Current Rating Amperes	Number Poles/ 600 Vdc Circuits	Trip Unit	80% Rated Catalog Number	100% Rated Catalog Number
90	3	Fixed thermal, fixed magnetic	**JGPVS3090W**	**CJGPVS3090W**
100	3	Fixed thermal, fixed magnetic	**JGPVS3100W**	**CJGPVS3100W**
125	3	Fixed thermal, fixed magnetic	**JGPVS3125W**	**CJGPVS3125W**
150	3	Fixed thermal, fixed magnetic	**JGPVS3150W**	**CJGPVS3150W**
175	3	Fixed thermal, fixed magnetic	**JGPVS3175W**	**CJGPVS3175W**
200	3	Fixed thermal, fixed magnetic	**JGPVS3200W**	**CJGPVS3200W**
225	3	Fixed thermal, fixed magnetic	**JGPVS3225W**	**CJGPVS3225W**
250	3	Fixed thermal, fixed magnetic	**JGPVS3250W**	**CJGPVS3250W**

KD PVS Frame

KD PVS Frame, 400 A Maximum, 600 Vdc Per Pole, 3 kA ①

Current Rating Amperes	Number Poles/ 600 Vdc Circuits	Trip Unit	80% Rated Catalog Number	100% Rated Catalog Number
100	3	Fixed thermal, fixed magnetic	**KDPVS3100W**	**CKDPVS3100W**
125	3	Fixed thermal, fixed magnetic	**KDPVS3125W**	**CKDPVS3125W**
150	3	Fixed thermal, fixed magnetic	**KDPVS3150W**	**CKDPVS3150W**
175	3	Fixed thermal, fixed magnetic	**KDPVS3175W**	**CKDPVS3175W**
200	3	Fixed thermal, fixed magnetic	**KDPVS3200W**	**CKDPVS3200W**
225	3	Fixed thermal, fixed magnetic	**KDPVS3225W**	**CKDPVS3225W**
250	3	Fixed thermal, fixed magnetic	**KDPVS3250W**	**CKDPVS3250W**
300	3	Fixed thermal, fixed magnetic	**KDPVS3300W**	**CKDPVS3300W**
350	3	Fixed thermal, fixed magnetic	**KDPVS3350W**	**CKDPVS3350W**
400	3	Fixed thermal, fixed magnetic	**KDPVS3400W**	**CKDPVS3400W**

Note

① Terminals not included with frames.

Catalog number includes breaker frame and trip unit. Order terminals separately. See **Page V4-T2-367**.

FD PV Frame

FD PV Frame, 100 A Maximum, 1000 Vdc, 3 kA ①

Current Rating Amperes	Poles in Series	Trip Unit	80% Rated Catalog Number	100% Rated Catalog Number
30	4	Fixed thermal, fixed magnetic	**FDPV4030W**	**CFDPV4030W**
40	4	Fixed thermal, fixed magnetic	**FDPV4040W**	**CFDPV4040W**
50	4	Fixed thermal, fixed magnetic	**FDPV4050W**	**CFDPV4050W**
60	4	Fixed thermal, fixed magnetic	**FDPV4060W**	**CFDPV4060W**
70	4	Fixed thermal, fixed magnetic	**FDPV4070W**	**CFDPV4070W**
80	4	Fixed thermal, fixed magnetic	**FDPV4080W**	**CFDPV4080W**
90	4	Fixed thermal, fixed magnetic	**FDPV4090W**	**CFDPV4090W**
100	4	Fixed thermal, fixed magnetic	**FDPV4100W**	**CFDPV4100W**

KD PV Frame

KD PV Frame, 350 A Maximum, 1000 Vdc, 5 kA ①

Current Rating Amperes	Poles in Series	Trip Unit	80% Rated Catalog Number	100% Rated Catalog Number
125	4	Fixed thermal, fixed magnetic	**KDPV4125W**	**CKDPV4125W**
150	4	Fixed thermal, fixed magnetic	**KDPV4150W**	**CKDPV4150W**
175	4	Fixed thermal, fixed magnetic	**KDPV4175W**	**CKDPV4175W**
200	4	Fixed thermal, fixed magnetic	**KDPV4200W**	**CKDPV4200W**
225	4	Fixed thermal, fixed magnetic	**KDPV4225W**	**CKDPV4225W**
250	4	Fixed thermal, fixed magnetic	**KDPV4250W**	**CKDPV4250W**
300	4	Fixed thermal, fixed magnetic	**KDPV4300W**	**CKDPV4300W**
350	4	Fixed thermal, fixed magnetic	**KDPV4350W**	**CKDPV4350W**

LG PV Frame

LG PV Frame, 400 A Maximum, 1000 Vdc, 5 kA ①

Current Rating Amperes	Poles in Series	Trip Unit	80% Rated Catalog Number	100% Rated Catalog Number
250	4	Fixed thermal, fixed magnetic	**LGPV4250W**	**CLGPV4250W**
300	4	Fixed thermal, fixed magnetic	**LGPV4300W**	**CLGPV4300W**
350	4	Fixed thermal, fixed magnetic	**LGPV4350W**	**CLGPV4350W**
400	4	Fixed thermal, fixed magnetic	**LGPV4400W**	**CLGPV4400W**

MDL PV Frame

MDL PV Frame, 600 A Maximum, 1000 Vdc, 7.5 kA ①

Current Rating Amperes	Poles in Series	Trip Unit	80% Rated Catalog Number	100% Rated Catalog Number
300	3	Fixed thermal, fixed magnetic	**MDLPV3300W**	**CMDLPV3300W**
350	3	Fixed thermal, fixed magnetic	**MDLPV3350W**	**CMDLPV3350W**
400	3	Fixed thermal, fixed magnetic	**MDLPV3400W**	**CMDLPV3400W**
450	3	Fixed thermal, fixed magnetic	**MDLPV3450W**	**CMDLPV3450W**
500	3	Fixed thermal, fixed magnetic	**MDLPV3500W**	**CMDLPV3500W**
600	3	Fixed thermal, fixed magnetic	**MDLPV3600W**	**CMDLPV3600W**

Note

① Terminals not included with frames.

Accessories

Available Accessories

- Auxiliary switch
- Shunt trip
- Electrical operator
- Alarm lockout
- Undervoltage release
- Terminals
- Lock-off devices
- End cap kits
- Rotary handle mechanisms
- Flexible shaft handle mechanisms

Optional modifications

- Freeze testing

For complete internal and external accessories, see the accessory section of each frame.

External Accessories

Description	Frame	Catalog Number
Imperial Base Mounting Hardware		
0.164-32 x 1.5-inch pan-head steel screws and lockwashers	FD PV	**BMH1**
0.250-20 x 1.5 inch pan-head steel screws and lockwashers	KD PV KD PVS	**BMH3**
—	JG PVS	N/A
—	LG PV	N/A
0.3125-18 x 1.25 inch filister-head steel screws and lockwashers and flat washers	MDL PV	**BMH5**
Metric Base Mounting Hardware		
M4–0.7 x 38 mm pan-head steel screws and lockwashers	FD PV	**BMH1M**
M6–0.7 x 38 mm pan-head steel screws and lockwashers	KD PV KD PVS	**BMH3M**
—	JG PVS	Included ①
—	LG PV	Included ①
M8-1.25 x 35 mm pan-head steel screws and lockwashers	MDL PV	**BMH5M**
Interphase Barriers		
	FD PV	**IPB1**
	KD PV KD PVS	**IPB3**
	JG PVS	**FJIPBK** ②
	LG PV	**IPB3**
	MDL PV	**IPB4**
Non-Padlockable Handle Block		
	FD PV	**LKD1**
	KD PV KD PVS	**LKD3**
	JG PVS	N/A
	LG PV	N/A
	MDL PV	**LKD4**
Padlockable Handle Lock Hasp ③		
	FD PV	**PLK1**
	KD PV KD PVS	**PLK3**
	JG PVS	**FJPHL**
	LG PV	**LPHL**
	MDL PV	**HLK4**

Factory Modifications—Freeze Testing to –40°C ④

Frame	Modification Code
FD PV	F01
JG PVS	F01
KD PV and KD PVS	F01
LG PV	F01
MDL PV	F01
Special calibration—contact Eaton for availability	

Molded Case Switches

Eaton's DC molded case switches (MCS) are used in applications requiring a compact, high capacity disconnect. PVGard 1000 Vdc MCS are UL 489B listed and have automatic instantaneous current protection. These devices do not provide overload protection.

Molded Case Switches

Maximum Continuous Ampere Rating at 50 °C	Interrupting Capacity Vdc	Poles in Series	Catalog Number
1000 Vdc Maximum			
100	3000	4	**FDPV4100KW**
200	5000	4	**KDPV4200KW**
250	5000	4	**KDPV4250KW**
350	5000	4	**KDPV4350KW**
400	5000	4	**LGPV4400KSW**
600	7500	3	**MDLPV3600KSW**

Notes

① Base mounting hardware is included with a circuit breaker or a molded case switch (included with breaker). If required separately, order 66A2546G02.
② Individually priced.
③ Locks in ON and OFF position.
④ Add 20% to list price.

Internal Accessories—Right Pole Mounting

	FD PV ①		JG PVS		KD PV KD PVS		LG PV		MDL PV	
	Factory Modification Code	Field Kit Catalog Number	Factory Modification Code	Field Kit Catalog Number	Factory Modification Code	Field Kit Catalog Number	Factory Modification Code	Field Kit Catalog Number	Factory Modification Code	Field Kit Catalog Number
Auxiliary Switch										
1A-1B	A06	**A1X1PK**	A1	**AUX1A1BPK**	A06	**A1X3PK**	A1	**AUX1A1BPK**	A06	**A1X4PK**
2A-2B	A13	**A2X1RPK**	A2	**AUX2A2BPK**	A13	**A2X3PK**	A2	**AUX2A2BPK**	A13	**A2X4PK**
Alarm Switch										
1 make/1 break	B06	**A1L1RPK**	B1	**ALM1M1BJPKL**	B06	**A1L3RPK**	B1	**ALM1M1BJPK**	B06	**A1L4RPK**
Auxiliary and Alarm Combo										
1A-1B, 1 make/1 break	C05	**AAL1RPK**	B2w	**AUXALRMJPK**	C05	**AAL3RPK**	B2	**AUXALRMJPK**	C05	**AA114RPK**

Internal Accessories—Left Pole Mounting

	FD PV ①		JG PVS		KD PV KD PVS		LG PV		MDL PV	
	Factory Modification Code	Field Kit Catalog Number	Factory Modification Code	Field Kit Catalog Number	Factory Modification Code	Field Kit Catalog Number	Factory Modification Code	Field Kit Catalog Number	Factory Modification Code	Field Kit Catalog Number
Shunt Trip										
12 Vdc	S02	**SNT1LP03K**	S4	**SNT012CPK**	S42	**SNT3P04K**	S4	**SNT012CPK**	S02	**SNT4LP03K**
24 Vdc	S02	**SNT1LP03K**	S6	**SNT024CPK**	S42	**SNT3P04K**	S6	**SNT024CPK**	S02	**SNT4LP03K**
48 Vdc	S06	**SNT1LP08K**	S7	**SNT4860CPK**	S50	**SNT3P06K**	S7	**SNT4860CPK**	S86	**SNT4LP23K**
60 Vdc	S06	**SNT1LP08K**	S7	**SNT4860CPK**	S50	**SNT3P06K**	S7	**SNT4860CPK**	S86	**SNT4LP23K**
125 Vdc	S10	**SNT1LP12K**	S5	**SNT125DPK**	S10	**SNT3P11K**	S2	**SNT120CPK**	S42	**SNT4LP26K**
250 Vdc	S14	**SNT1LP18K**	—	**—**	S14	**SNT3P14K**	**—**	**—**	S14	**SNT4LP14K**
120 Vac	S10	**SNT1LP12K**	S2	**SNT120CPK**	S10	**SNT3P11K**	S2	**SNT120CPK**	S10	**SNT4LP11K**
Undervoltage Release										
12 Vdc	U30	**UVH1LP20K**	—	—	T02	**UVH3LP20K**	U1	**UVR012DPK**	T02	**UVH4LP20K**
24 Vdc	U34	**UVH1LP21K**	U2	**UVR024CPK**	T02	**UVH3LP21K**	U2	**UVR024DPK**	T06	**UVH4LP21K**
48 Vdc	U38	**UVH1LP22K**	U4	**UVR048DPK**	T10	**UVH3LP22K**	U4	**UVR048DPK**	T10	**UVH4LP22K**
60 Vdc	—	—	U4	**UVR048DPK**	—	—	—	—	—	—
125 Vdc	U42	**UVH1LP26K**	U6	**UVR125DPK**	T14	**UVH3LP26K**	U6	**UVR125DPK**	T14	**UVH4LP26K**
250 Vdc	U46	**UVH1LP28K**	U8	**UVR250DPK**	T18	**UVH3LP28K**	U8	**UVR250DPK**	T18	**UVH4LP28K**
120 Vac	U14	**UVH1LP08K**	U5	**UVR120APK**	U18	**UVH3LP08K**	U5	**UVR120APK**	U18	**UVH4LP08K**

Notes

① Underwriters Laboratories requires that internal accessories for the FD PV be installed at the factory. Internal accessories are UL listed for factory installation under E7819. Where local codes and standards permit and UL listing is not required, internal accessories can be field installed. Accessory installation should be done before the circuit breaker is mounted and connected.

One accessory can be mounted per pole, per breaker.

PVGard Solar Circuit Breaker Terminal Offering

Breaker Frame	Maximum Breaker Ampacity	Terminal Body Material	Wire Type	AWG Wire Range/ Number of Conductors	Metric Wire Range mm^2	Number of Terminals Included	Standard Terminal Catalog Number	Comments
FD PV	50	Steel	Cu/Al	14–4 (1)	2.5–25 (1)	3	**3TA50FB**	
	100	Aluminum	Cu/Al	6–300 kcmil (1)	16–150 (1)	3	**3TA225FDK3**	Includes 3P terminal cover
	100	Aluminum	Cu/Al	6–300 kcmil (1)	16–150 (1)	3	**3TA225FDK**	Includes 3P terminal cover Replacement use only
	100	Copper	Cu	4–4/0 (1)	25–95 (1)	3	**3T225FD**	
JG PVS	250	Aluminum	Cu/Al	#8–350 kcmil (1)	—	—	**TA250FJ**	
	250	Aluminum	Cu/Al	(2) 2/0–(2) 4/0	—	①	**3TA251FJK1**	
	250	Aluminum	Cu/Al	(2) 2/0–(2) 4/0	—	②	**3TA251FJK2**	
	250	Copper	Cu	#4–350 kcmil (1)	—	—	**T250FJ**	
KD PV KD PVS	225	Aluminum	Cu/Al	3–350 kcmil (1)	35–185 (1)	1	**TA300K**	
	250	Aluminum	Cu/Al	250–500 kcmil (1)	120–240 (1)	1	**TA350K**	
	250	Aluminum	Cu/Al	3/0–250 kcmil (2)	95–120 (1)	4	**4TA400K**	Contains interphase barriers
	250	Aluminum	Cu/Al	2/0–250 kcmil (2) or 2/0–500 kcmil (1)	70–240 (2)	4	**4TA401K**	
	300	Aluminum	Cu/Al	3/0–250 kcmil (2)	95–120 (2)	4	**4TA401K**	Contains interphase barriers
	350	Aluminum	Cu/Al	3/0–250 kcmil (2)	95–120 (2)	4	**4TA401K**	Contains interphase barriers
	225	Copper	Cu	3–350 kcmil (1)	35–185 (1)	1	**T300K**	
	250	Copper	Cu	250–500 kcmil (1)	120–240 (1)	1	**T350K**	
	250	Copper	Cu	3/0–250 kcmil (2)	95–120 (1)	4	**4T400K**	Contains interphase barriers
	300	Copper	Cu	3/0–250 kcmil (2)	95–120 (2)	4	**4TA401K**	Contains interphase barriers
	350	Copper	Cu	3/0–250 kcmil (2)	95–120 (2)	4	**4TA401K**	Contains interphase barriers
LG PV	400	Aluminum	Cu/Al	2–500 kcmil (2)	35–240 (2)	4	**4TA632LK**	Includes 4P terminal cover
	250	Copper	Cu	2–500 kcmil (1)	35–240 (1)	1	**T350LK**	
	400	Copper	Cu	2–500 kcmil (2)	35–240 (2)	4	**4T632LK**	Includes 4P terminal cover
MDL PV	300	Aluminum	Cu/Al	1–500 kcmil (2)	—	1	**TA700MA1**	
	600	Aluminum	Cu/Al	3/0–400 kcmil (3)	—	1	**TA800MA2**	

Endcap Kits

Breaker Frame	Number of Poles	Thread Type	Thread Size	Catalog Number
FD PV	4	Imperial	10–32	**KPEK14**
	4	Metric	M–5	**KPEKM14**
JG PVS	3	Imperial	—	**FJ3RTDK**
	3	Metric	—	**FJ3RTWK**
KD PV	4	Imperial	0.312–18	**KPEK34**
	4	Metric	M–8	**KPEKM34**
KD PVS	3	Imperial	—	**KPEK3**
	3	Metric	—	**KPEKM3**
LG PV	4	Imperial	—	**N/A**
	4	Metric	M-10	**L4RTWK**
MDL PV	3	Imperial	—	—
	3	Metric	—	—

Notes

① Three terminals with terminal shield as a kit.

② Three terminals with two interphase barriers as a kit.

Jumpers

Jumpers must be ordered separately. Priced individually.

FD PV Frame

Description	Maximum Amperes	Catalog Number
Single copper jumper	60	**DC1F060** ①
	100	**DC1F100** ①
	125	**DC1F125** ①
	225	**DC1F225** ①
Package of 2 aluminum jumpers	100	**DC2FD100A**
Package of 3 aluminum jumpers	100	**DC3FD100A**

JG PVM, JG PVMD Frames

Description	Maximum Amperes	Catalog Number
Single aluminum jumper	250	**DC1JG250A** ①
Package of 2 aluminum jumpers	250	**DC2JG250A** ①
Package of 20 aluminum jumpers	250	**DC20JG250A** ①

KD PV, KD PVM, KD PVMD Frames

Description	Maximum Amperes	Catalog Number
Single copper jumper	400	**DC1K400** ①
Package of 2 aluminum jumpers	400	**DC2KD400A** ①
Package of 3 aluminum jumpers	400	**DC3KD400A** ①

LG PV Frame

Description	Maximum Amperes	Catalog Number
Package of 2 aluminum jumpers	400	**DC2LG400A**
Package of 3 aluminum jumpers	400	**DC3LG400A**
Package of 30 aluminum jumpers	400	**DC30LG400A**

Note

① Not UL Listed; Non UL listed jumpers used in a UL application may need to be qualified by the OEM in their assembly. This may take place with UL or another certified testing agency.

Technical Data and Specifications

- Thermal-magnetic circuit breakers
- Designed to meet UL 489B for solar photovoltaic circuit protection
- 100% rated of the continuous current rating
- 50 °C calibrated
- Can be applied in grounded, ungrounded or bi-polar systems
- Ability to open on signal from DC arc or ground fault detector
- Two PVGard lineups
  - UL File EE350638, Category Control Number DIUR
  - 600 Vdc per-pole breaker and switch
    - Each pole rated 600 Vdc
  - 1000 Vdc poles-in-series breaker and switch
    - Requires poles in series connection

Quick Reference PVGard Solar Circuit Breakers 600 Vdc Per-Pole

PVGard 600 Vdc Current Ratings by Frame UL 489B Interrupting Capacity (kA) 600 Vdc Per-Pole

Circuit Breaker Type	Minimum Amperes	Maximum Amperes	kA Rating
JG PVS	90	250	1.2
KD PVS	100	400	3

Quick Reference PVGard Solar Circuit Breakers 1000 Vdc Poles-in-Series

PVGard 1000 Vdc Current Ratings by Frame UL 489B Interrupting Capacity (kA) 1000 Vdc

Circuit Breaker Type	Minimum Amperes	Maximum Amperes	kA Rating	Poles in Series
FD PV	30	100	3	4
KD PV	125	350	5	4
LG PV	250	400	5	4
MDL PV	300	600	7.5	3

PVGard 600 Vdc Per-Pole Solar PV Circuit Breakers (100% and 80% Rated Frames)

	JG PVS	KD PVS
Number of 600 Vdc circuits	3	3
Maximum voltage rating	600 Vdc	600 Vdc
Ampere range	90–250 A	100–400 A
Interrupting capacity at 600 Vdc	1.2 kA	3 kA
Time constant	1 ms	1 ms
Trip unit type	Thermal-magnetic	Thermal-magnetic
Rated impulse withstand voltage		
Main conducting paths	8 kV	8 kV
Auxiliary circuits	4 kV	4 kV
Endurance		
Mechanical operations	10,000	6000
Electrical operations	400	400
Maximum switching frequency	240 per hour	240 per hour
Third-party certification	UL 489B	UL 489B
Environment		
Design ambient temperature	50 °C	50 °C
Maximum current at 60 °C, as % of rated current	93%	93%
Maximum current at 70 °C, as % of rated current	85%	85%
Operating temperature range	–20 °C to +50 °C	–20 °C to +50 °C
Storage temperature range	–20 °C to +70 °C	–20 °C to +70 °C
Suitable for freeze temperatures to –40 °C	Option	Option
Relative humidity	0 to 95% noncondensing	0 to 95% noncondensing
Suitable for reverse-feed applications	Yes	Yes
Mounting—permissible mounting position		

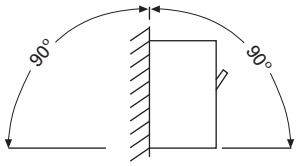

Connection diagrams		
Terminations		
Al/Cu wire	TA250FJ: (1) #8–350 kcmil	TA300K: (1) #3–350 kcmil
	3TA251FJK1: (2) 2/0–(2) 4/0 ②	TA350K: (1) 250–500 kcmil
	3TA251FJK2: (2) 2/0–(2) 4/0 ③	TA403K: (2) 1/0–400 kcmil
		3TA402K: (1) 500—750 kcmil ④
Cu wire	T250FJ: (1) #4–350 kcmil	T300K: (1) #3–350 kcmil
Dimensions in inches (mm)		
Height	7.00 (177.8)	10.13 (257.3)
Width	4.13 (104.9)	5.50 (139.7)
Depth	3.57 (90.7)	4.10 (104.1)
Weight in lbs	6.6	11.42

Notes

① Three terminals with terminal shield as a kit.
② Three terminals with two interphase barriers as a kit.
③ Not UL 489B recognized size for maximum of 400 A breaker.

PVGard 1000 Vdc Solar PV Circuit Breakers (100% and 80% Rated Frames)

	FD PV	KD PV	LG PV	MDL PV
Number of poles	4	4	4	3
Maximum voltage rating	1000 Vdc	1000 Vdc	1000 Vdc	1000 Vdc
Maximum current rating	100 A	350 A	400 A	600 A
Interrupting capacity at 1000 Vdc	3 kA	5 kA	5 kA	7.5 kA
Time constant	1 ms	1 ms	1 ms	1 ms
Ampere range	15–100 A	125–350 A	250–400 A	300–600 A
Trip unit type	Thermal-magnetic	Thermal-magnetic	Thermal-magnetic	Thermal-magnetic
Rated impulse withstand voltage				
Main conducting paths	8 kV	8 kV	8 kV	8 kV
Auxiliary circuits	4 kV	4 kV	4 kV	4 kV
Endurance				
Mechanical operations	10,000	10,000	8000	8000
Electrical operations	1000	400	400	400
Maximum switching frequency	300 per hour	240 per hour	240 per hour	240 per hour
Third-party certification	UL 489B	UL 489B	UL 489B	UL 489B
Environment				
Design ambient temperature	50 °C	50 °C	50 °C	50 °C
Maximum current at 60 °C, as % of rated current	91%	91%	93%	93%
Maximum current at 70 °C, as % of rated current	88%	88%	88%	88%
Operating temperature range	–20 °C to +50 °C	–20 °C to +50 °C	–20 °C to +50 °C	–20 °C to +50 °C
Storage temperature range	–20 °C to +70 °C	–20 °C to +70 °C	–20 °C to +70 °C	–20 °C to +70 °C
Suitable for freeze temperatures to –40 °C	Option	Option	Option	Option
Relative humidity	0 to 95% noncondensing	0 to 95% noncondensing	0 to 95% noncondensing	0 to 95% noncondensing
Suitable for reverse-feed applications	Yes	Yes	Yes	Yes
Mounting—permissible mounting position				

Connection diagrams

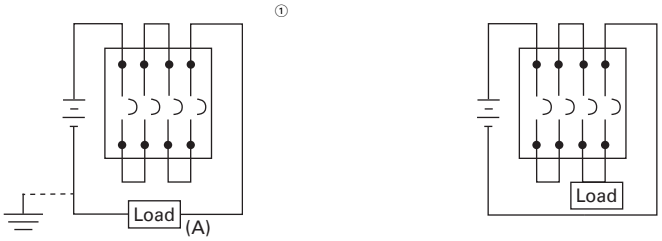

Terminations				
Al/Cu wire	#6–300 kcmil	(2) 3/0–250 kcmil	(2) #2–500 kcmil	(3) 3/0–400 kcmil
Cu wire	#4–4/0	(2) 3/0–250 kcmil	(2) #2–500 kcmil	(3) 3/0–300 kcmil
Dimensions in inches (mm)				
Height	6.00 (152.4)	10.13 (257.3)	10.13 (257.3)	16.00 (406.4)
Width	5.50 (139.7)	7.22 (183.4)	7.22 (183.4)	8.25 (209.5)
Depth	3.38 (85.9)	4.09 (103.9)	4.09 (103.9)	4.06 (103.1)
Weight in lbs	6	20	20	29

Notes

① Suitable for use on ungrounded systems, or grounded systems that have one end of load (A) connected to grounded terminal, opposite poles in series connection.

② Suitable for use on ungrounded systems only.

Dimensions

Approximate Dimensions in Inches (mm)

PVGard Solar Circuit Breakers—600 Vdc Per-Pole

Frame	Number of Circuits in a Frame	Width	Height	Depth
JG PVS	3	4.13 (104.9)	7.00 (177.8)	3.44 (87.4)
KD PVS	3	5.49 (139.4)	10.13 (257.2)	4.31 (109.6)

PVGard Solar Circuit Breakers—1000 Vdc Poles-in-Series

Frame	Number of Poles	Width	Height	Depth
FD PV	4	5.50 (139.7)	6.00 (152.4)	3.38 (86.0)
KD PV	4	7.22 (183.4)	10.13 (257.3)	4.09 (103.9)
LG PV	4	7.22 (183.4)	10.13 (257.3)	4.09 (103.9)
MDL PV	3	8.25 (209.6)	16.00 (406.4)	4.06 (103.1)

Wiring Diagrams

Series Connection Diagrams for DC Application ①②

JF PVS, KD PVS—600 Vdc Per-Pole

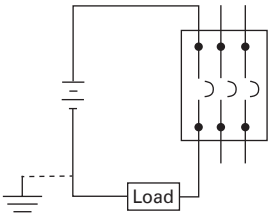

Suitable for grounded or ungrounded systems.
Suitable for quantity (3) 600 Vdc circuits.

FD PV, KD PV, LG PV—1000 Vdc Maximum—Four Poles-in-Series

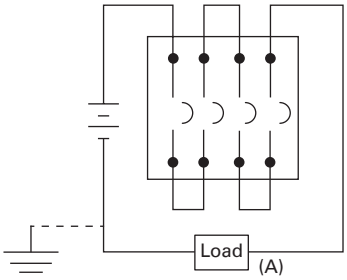

Suitable for use on ungrounded systems, or grounded systems that have one end of load (A) connected to grounded terminal, opposite poles in series connection.

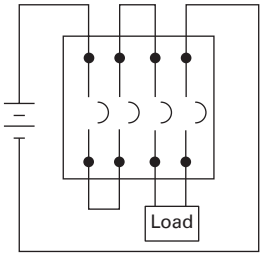

Suitable for use on ungrounded systems only.

MDL PV—1000 Vdc Maximum—Three Poles in Series

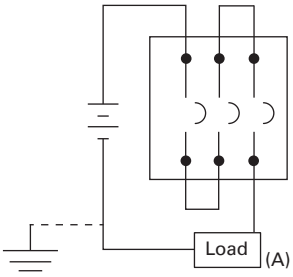

Suitable for use on ungrounded systems, or grounded systems that have one end of load (A) connected to grounded terminal, opposite poles in series connection.

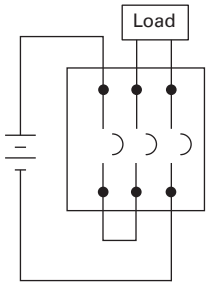

Suitable for use on ungrounded systems only.

Notes

① Poles in series connection is customer supplied. Use rated cable per NEC.

② For grounded systems, all poles in series must be connected on non-grounded terminal, with load connected to grounded terminal.

E^2 Mining Service Breakers

Contents

Description	*Page*
Engine Generator Circuit Breakers	**V4-T2-341**
Direct Current Circuit Breakers	**V4-T2-347**
PVGard Solar Circuit Breakers—600 Vdc Per-Pole and 1000 Vdc Poles-in-Series	**V4-T2-361**
E^2 Mining Service Breakers	
Catalog Number Selection	**V4-T2-376**
Product Selection	**V4-T2-380**
Accessories	**V4-T2-391**
Dimensions	**V4-T2-394**
E2VAC Mining Vacuum Circuit Breaker	**V4-T2-400**
Classic Mining Breakers	**V4-T2-403**
Add-On Ground Fault Protection—Type GFR	**V4-T2-417**

E^2 Mining Service Breakers

Product Overview

State-of-the-art E^2 mining service breakers incorporate the rigid specifications and testing procedures developed by a focus group led by engineers from several large coal companies and Eaton design engineers. Additionally, the performance of these breakers was proven and verified during hundreds of hours of field testing in harsh mine environments.

E^2 mining breakers are available in 600 Vac, l000Y/577 Vac and 1200 Vac. Interchangeable trip units can be used on either 600 or 1000 Vac frames.

The E^2 mining breaker family is designed especially for trailing cable application per MSHA 30 CFR 75. Field interchangeable electronic rms sensing trip units are available from 150 to 2000 amperes with instantaneous pickup settings conforming to the code of Federal Regulations 30 CFR 75.601-2. Electromechanical trip units are also available with a wide range of magnetic pickup ranges.

E^2 electronic trip units are the first to provide the mining industry with true rms sensing, made possible by the custom ASIC microprocessor in each electronic trip unit.

E^2 breakers are designed to be physically and electrically interchangeable with Classic Mining Service Breakers and supersede Series C® Mining Service Breakers. The table to the right outlines direct replacements.

600 Vac Mining Breaker Replacement Chart

Classic	Series C	E^2
FBM	FDBM	E^2F
HFBM	FDM	E^2F
	HFDM (mag. only)	E^2F
—	JDM	E^2J
KAM	KDM	E^2K
KAMH	KDM	E^2K
LAM	LDM	E^2L
LAMH	LDM	E^2L
LCM	LDM	E^2L
LCMH	LDM	E^2L
MAM	—	E^2M
MAMH	—	E^2M
MCM	—	E^2M
MCMH	—	E^2M
NBM	—	E^2N
NBMH	—	E^2N
NCM	—	E^2N
NCMH	—	E^2N

1000 Vac Mining Breaker Replacement Chart

Classic	Series C	E^2M
HFM	—	E^2FM
—	JDCM	E^2JM
HKAM	KDCM	E^2KM
HLAM	LDCM	E^2LM
HLCM	LDCM	E^2LM
HMAM	—	E^2MM
HMCM	—	E^2MM
HNBM	—	E^2NM
HNBMH	—	E^2NM
HNCM	—	E^2NM
HLCLM	—	E^2NM
HPBM	—	E^2RM ①

Additional Information on Mining Breakers

Source	Description
TD01217001E	E^2 Mining Circuit Breaker Dimensional Data
BR01217001E	E^2 Mining Circuit Breaker Brochure
TC01217001E	E^2 Mining Circuit Breaker Time Current Curves
www.eaton.com/mining	Mining and Metals

Note

① E^2R/E^2RM is a new frame physically different than the HPBM. See DS29-170MS.

Eaton's mining service circuit breakers provide short-circuit protection as specified in the code of Federal Regulations 30 CFR 75.601-2.

E^2 225/400 A K frame and 400/600 A L frame electronic trip units feature specifically designed instantaneous pickup settings to conform exactly with the code of Federal Regulations 30 CFR 75.601-2. Electromechanical trip units are also available with a wide range of magnetic pickup ranges.

The tables below list the conductor size maximum allowable circuit breaker instantaneous setting and the E^2 breaker that meets that setting.

Interrupting Capacity Rating

Circuit Breaker Type	Interrupting Capacity (Symmetrical kA) Vac (50/60 Hz) 240	480	600	1000Y/577	1200	Vdc ① 250
E^2F	65	35	18	—	—	10
E^2J	65	35	18	—	—	10
E^2K	65	35	25	—	—	10
E^2LME	100	65	35	—	—	42
E^2L	65	35	25	—	—	22
E^2M	65	35	25	—	—	22
E^2N	65	50	25	—	—	—
E^2R	125	65	50	—	—	—
E^2FM	65	25	18	10	—	10
E^2JM	65	35	18	10	—	22
E^2KM	65	35	25	14	—	10
E^2LMZ	100	65	35	10	—	42
E^2LM	—	35	25	18	—	22
E^2MM	—	35	25	18	—	22
E^2NM ②	—	50	25	25	—	—
E^2RM	—	65	50	25	—	—
E^2KW	—	—	—	10	10	—
E^2LW	—	—	—	10	10	—
E^2MW	—	—	—	12	12	—

Trailing Cable Setting Per 30 CFR 75

Conductor Size	Maximum Breaker Instantaneous Setting	Maximum Ampere 75 °C Insulated Conductor	E^2/E^2M/E^2W Instantaneous Only	Setting
14	50	15	E^2K 150 A	A
12	75	20	E^2K 150 A	B
10	150	30	E^2K 150 A	C
8	200	50	E^2K 225 A	A
6	300	65	E^2K 225 A	B
4	500	85	E^2K 225 A / E2L 400 A	C/A
3	600	100	E^2K 225 A / E2L 400 A	D/B
2	800	115	E^2K 225 A / E2L 400 A	E/C
1	1000	130	E^2K 225 A / E2L 400 A	F/D
1/0	1250	150	E^2K 225 A / E2L 400 A	G/E
2/0	1500	175	E^2K 225 A / E2L 400 A	H/F
3/0	2000	200	E^2L 400 A	G
4/0	2500	230	E^2L 400 A	H
250	2500	255	E^2L 400 A	H
300	2500	285	E^2L 400 A	H
350	2500	310	E^2L 400 A	H
400	2500	335	E^2L 400 A	H
500	2500	380	E^2L 400 A	H

Auxiliary Switch Electrical Rating Data

Maximum Voltage	Frequency	Maximum Current Amperes
600	50/60 Hz	6.0
125	DC	0.5 (non-inductive load)
250	DC	0.25 (non-inductive load)

Alarm (Signal/Lockout Switch) Electrical Rating Data

Maximum Voltage	Frequency	Maximum Current Amperes
600	50/60 Hz	6.0
125	DC	0.5 (non-inductive load)
250	DC	0.25 (non-inductive load)

Notes

① Two poles in series. DC rating applies to breakers with thermal-magnetic trip unit. Breakers with electronic trip units are not DC rated.

② Series rated for application with Eaton's E^2KM and E^2LM breakers.

Catalog Number Selection

This information is presented only as an aid to understanding catalog numbers. It is not to be used to build catalog numbers for circuit breakers or trip units.

E^2 Mining Service Breaker with 310+ Electronic Trip Unit Technology

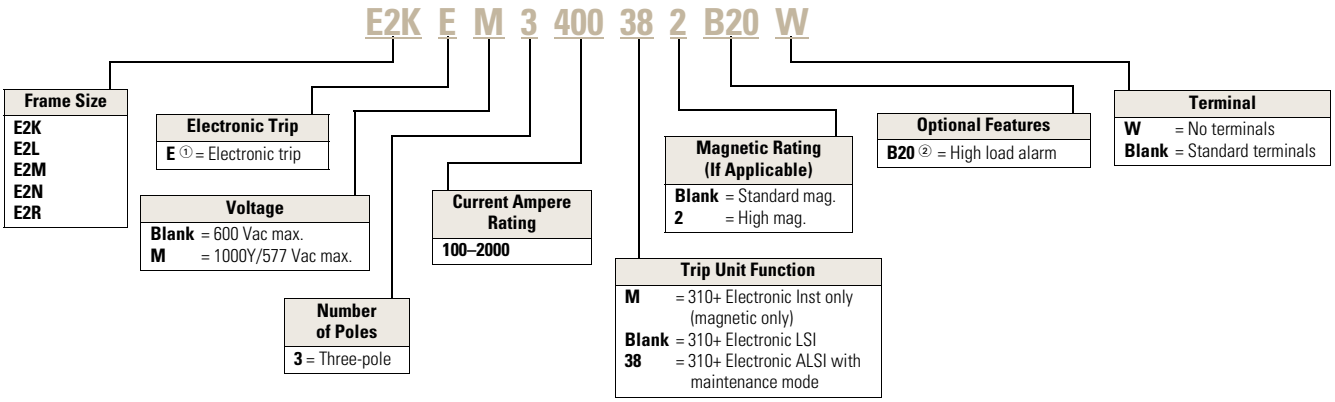

E^2 Mining Service 310+ Electronic Trip Unit

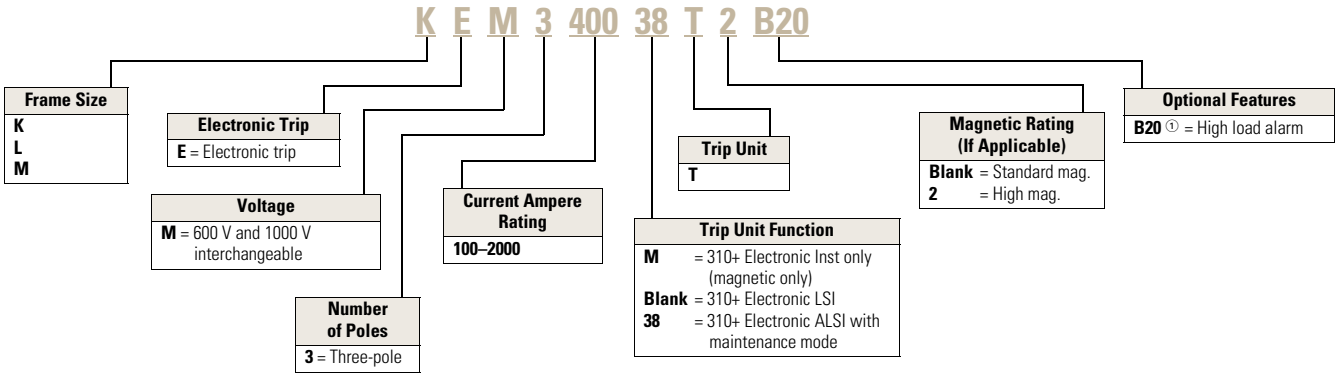

Notes

① All N- and R-Frame breakers equipped with 310+ Electronic Trip Unit. No "E" suffix required.

② Not available with instantaneous only.

E² Mining Service Breaker Frame Only ①

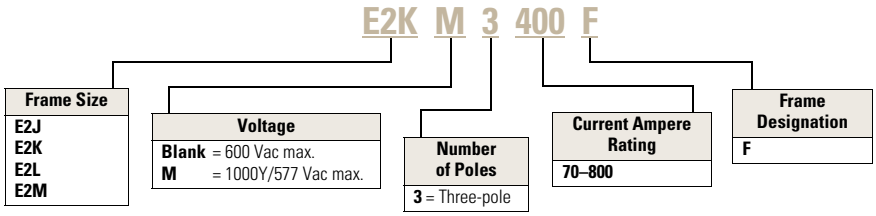

E² Mining Service Breaker with Thermal-Magnetic Trip Unit ①

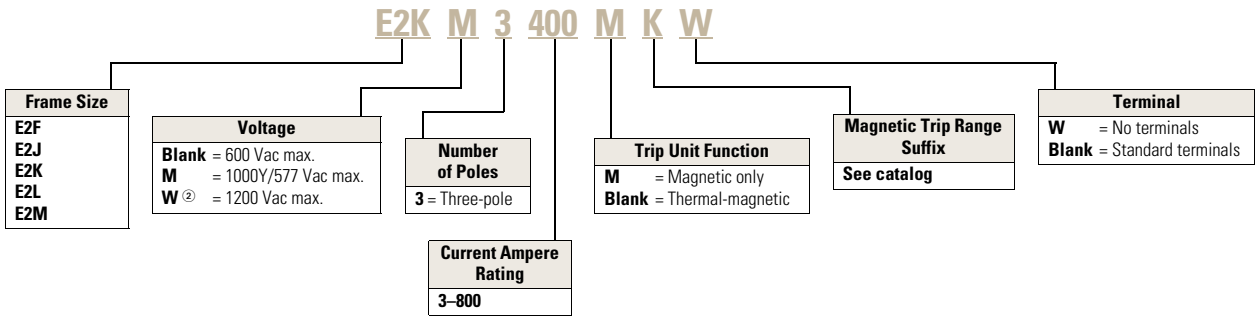

E² Mining Service Thermal-Magnetic Trip Unit ①

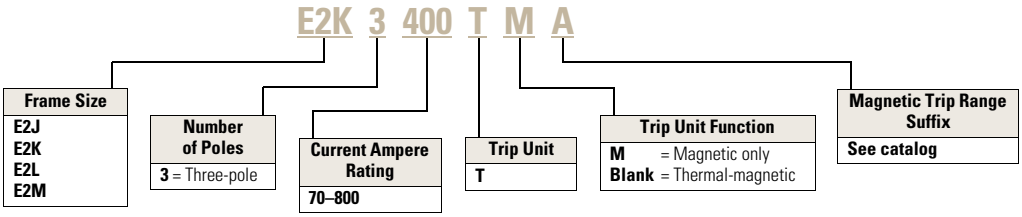

Notes

① Does not apply to E2LME/LMZ.

② Only available in K-, L- and M-Frames.

Undervoltage Release Mechanism Electrical Rating Data

Breaker Type	Supply Voltage	Dropout Voltage Minimum	Dropout Voltage Maximum	Pickup Voltage Maximum	VA
E^2F/E^2FM	110 Vac	44.5	77	93.5	1.3
	120 Vac				1.5
	127 Vac				1.7
	110 Vdc				1.5
	120 Vdc				1.7
	125 Vdc				1.9
E^2J/E^2JM	110 Vac	44.5	77	93.5	1.8
	120 Vac				2.1
	127 Vac				2.4
	110 Vdc				1.6
	120 Vdc				1.9
	125 Vdc				2.2
$E^2K/E^2KM/E^2KW$	110 Vac	44.5	77	93.5	1.8
	120 Vac				2.1
	127 Vac				2.4
	110 Vdc				1.6
	120 Vdc				1.9
	125 Vdc				2.2
E^2LME/E^2LMZ	110 Vac	44.5	77	93.5	0.96
	120 Vac				1.13
	127 Vac				1.25
	110 Vdc	43.8	77	93.5	0.94
	120 Vdc				1.12
	125 Vdc				1.21
$E^2L/E^2LM/E^2LW/E^2M/E^2MM/E^2MW$	110 Vac	44.5	77	93.5	1.8
	120 Vac				2.1
	127 Vac				2.4
	110 Vdc				1.6
	120 Vdc				1.9
	125 Vdc				2.2
E^2N/E^2NM	110 Vac	44.5	77	93.5	1.8
	120 Vac				2.1
	127 Vac				2.4
	110 Vdc				1.6
	120 Vdc				1.9
	125 Vdc				2.2
E^2R/E^2RM	110 Vac	44.5	77	93.5	3.3
	120 Vac				3.6
	127 Vac				3.8
	110 Vdc	43.8	77	93.5	3.3
	120 Vdc				3.6
	125 Vdc				3.8

Shunt Trip Electrical Rating Data

Breaker Type	Supply Voltage	Operating Voltage Minimum	VA
E^2F/E^2FM	48 Vac	33.6	92
	60 Vac		140
	110 Vac		480
	120 Vac		570
	127 Vac		640
	208 Vac	146	180
	220 Vac		200
	230 Vac		240
	48 Vdc	33.6	100
	60 Vdc		160
	110 Vdc	77	55
	120 Vdc		66
	125 Vdc		71
E^2J/E^2JM	110 Vac	60.5	66
	120 Vac		84
	127 Vac		102
	110 Vdc	77	112
	120 Vdc		138
	125 Vdc		150
$E^2K/E^2KM/E^2KW$	110 Vac	60	100
	120 Vac		120
	127 Vac		140
	110 Vdc	77	110
	120 Vdc		130
	125 Vdc		140
	24 Vac		41
	48 Vac	18	139
	60 Vac		210
E^2LME/E^2LMZ	110 Vac	60	83
	120 Vac		92
	127 Vac		117
	24 Vdc		120
	48 Vdc	18	475
	60 Vdc		720
	110 Vdc	82	99
	120 Vdc		120
	125 Vdc		121

Breaker Type	Supply Voltage	Operating Voltage Minimum	VA
$E^2L/E^2LM/E^2LW/E^2M/E^2MM/E^2MW$	48 Vac	34	830
	60 Vac		1280
	110 Vac	60	100
	120 Vac		120
	127 Vac		140
	48 Vdc	34	710
	60 Vdc		1105
	110 Vdc	77	110
	120 Vdc		130
	125 Vdc		140
E^2N/E^2NM	110 Vac	60	100
	120 Vac		120
	127 Vac		140
	110 Vdc	77	110
	120 Vdc		130
	125 Vdc		140
E^2R/E^2RM	110 Vac	60.5	330
	120 Vac		390
	127 Vac		430
	110 Vdc	77	370
	120 Vdc		440
	125 Vdc		480

Product Selection

3 A–150 A

E²F/E²FM

E²F/E²FM

Sealed Breakers with Non-Interchangeable Trip Unit—Include Line/Load Terminals, Non-Electronic Trip Units ①

Maximum Continuous Ampere Rating at 40 °C	Magnetic Trip Range	Trip Unit Only Catalog Number	600 Vac Maximum 250 Vdc 35 kA at 480 Vac Three-Pole Complete Breaker Catalog Number	1000Y/ 577 Vac Maximum 250 Vdc 10 kA at 1000 Vac Three-Pole Complete Breaker Catalog Number
Thermal-Magnetic				
15	—	—	**E2F3015**	—
20	—	—	**E2F3020**	**E2FM3020**
25	—	—	**E2F3025**	**E2FM3025**
30	—	—	**E2F3030**	—
35	—	—	**E2F3035**	—
40	—	—	**E2F3040**	**E2FM3040**
45	—	—	**E2F3045**	—
50	—	—	**E2F3050**	**E2FM3050**
60	—	—	**E2F3060**	**E2FM3060**
70	—	—	**E2F3070**	**E2FM3070**
80	—	—	**E2F3080**	**E2FM3080**
90	—	—	**E2F3090**	**E2FM3090**
100	—	—	**E2F3100**	**E2FM3100**
125	—	—	**E2F3125**	**E2FM3125**
150	—	—	**E2F3150**	**E2FM3150**
Magnetic Only				
3	9–30	—	**E2F003AM**	—
7	21–70	—	**E2F007CM**	—
15	45–150	—	**E2F015EM**	—
30	90–300	—	**E2F030HM**	—
	50–150	—	**E2F030EM**	—
50	150–500	—	**E2F050KM**	**E2FM050KM**
	66–190	—	**E2F050YM**	**E2FM050YM**
70	210–700	—	**E2F070MM**	**E2FM070MM**
100	150–500	—	**E2F100KM**	**E2FM100KM**
	300–1000	—	**E2F100RM**	**E2FM100RM**
150	450–1500	—	**E2F150TM**	**E2FM150TM**
	750–2500	—	**E2F150UM**	**E2FM150UM**

Note

① For two-pole application, use outer poles.

70 A–250 A

E²J/E²JM

E²J/E²JM

Circuit Breakers with Interchangeable Non-Electronic Trip Units

Maximum Continuous Ampere Rating at 40 °C	Magnetic Trip Range	Trip Unit Only Catalog Number	600 Vac Maximum 250 Vdc 35 kA at 480 Vac Three-Pole ① Complete Breaker Catalog Number	1000Y/ 577 Vac Maximum 250 Vdc 10 kA at 1000 Vac Three-Pole ② Complete Breaker Catalog Number
Thermal-Magnetic				
70	300–650	**E2J3070T**	**E2J3070W**	**E2JM3070W**
90	450–900	**E2J3090T**	**E2J3090W**	**E2JM3090W**
100	500–1000	**E2J3100T**	**E2J3100W**	**E2JM3100W**
125	625–1250	**E2J3125T**	**E2J3125W**	**E2JM3125W**
150	750–1500	**E2J3150T**	**E2J3150W**	**E2JM3150W**
175	875–1750	**E2J3175T**	**E2J3175W**	**E2JM3175W**
200	1000–2000	**E2J3200T**	**E2J3200W**	**E2JM3200W**
225	300–650	**E2J3225TA**	**E2J3225AW**	**E2JM3225AW**
	500–1000	**E2J3225TD**	**E2J3225DW**	**E2JM3225DW**
	1125–2250	**E2J3225T**	**E2J3225W**	**E2JM3225W**
250	1250–2500	**E2J3250T**	**E2J3250W**	**E2JM3250W**
Magnetic Only				
250	300–650	**E2J3250TMA**	**E2J3250MAW**	**E2JM3250MAW**
	450–900	**E2J3250TMC**	**E2J3250MCW**	**E2JM250MCW**
	500–1000	**E2J3250TMD**	**E2J3250MDW**	**E2JM3250MDW**
	625–1250	**E2J3250TMF**	**E2J3250MFW**	**E2JM3250MFW**
	750–1500	**E2J3250TMG**	**E2J3250MGW**	**E2JM3250MGW**
	875–1750	**E2J3250TMJ**	**E2J3250MJW**	**E2JM3250MJW**
	1000–2000	**E2J3250TMK**	**E2J3250MKW**	**E2JM3250MKW**
	1125–2250	**E2J3250TML**	**E2J3250MLW**	**E2JM3250MLW**
	1250–2500	**E2J3250TM**	**E2J3250MW**	**E2JM3250MW**

Notes

① Frame only: **E2J3250F**.

② Frame only: **E2JM3250F**.

100 A–400 A

E²K/E²KM/E²KW

E²K/E²KM

Circuit Breakers with Interchangeable Non-Electronic Trip Units

Maximum Continuous Ampere Rating at 40 °C	Magnetic Trip Range	Trip Unit Only Catalog Number	600 Vac Maximum 250 Vdc 35 kA at 480 Vac Three-Pole ① Complete Breaker Catalog Number	1000Y/ 577 Vac Maximum 250 Vdc 14 kA at 1000 Vac Three-Pole ② Complete Breaker Catalog Number	1200 Vac Maximum 10 kA at 1200 Vac Three-Pole ③④ Complete Breaker Catalog Number
Thermal-Magnetic					
100	500–1000	**E2K3100T**	**E2K3100W**	**E2KM3100W**	**E2KW3100W**
125	625–1250	**E2K3125T**	**E2K3125W**	**E2KM3125W**	**E2KW3125W**
150	750–1500	**E2K3150T**	**E2K3150W**	**E2KM3150W**	**E2KW3150W**
175	875–1750	**E2K3175T**	**E2K3175W**	**E2KM3175W**	**E2KW3175W**
200	1000–2000	**E2K3200T**	**E2K3200W**	**E2KM3200W**	**E2KW3200W**
225	300–650	**E2K3225TA**	**E2K3225AW**	**E2KM3225AW**	**E2KW3225AW**
	500–1000	**E2K3225TD**	**E2K3225DW**	**E2KM3225DW**	**E2KW3225DW**
	1125–2250	**E2K3225T**	**E2K3225W**	**E2KM3225W**	**E2KW3225W**
250	1250–2500	**E2K3250T**	**E2K3250W**	**E2KM3250W**	**E2KW3250W**
300	1500–3000	**E2K3300T**	**E2K3300W**	**E2KM3300W**	**E2KW3300W**
320	1600–3200	—	—	—	**E2KW3320W**
350	1750–3500	**E2K3350T**	**E2K3350W**	**E2KM3350W**	**E2KW3350W**
400	2000–4000	**E2K3400T**	**E2K3400W**	**E2KM3400W**	—
Magnetic Only					
400	300–650	**E2K3400TMA**	**E2K3400MAW**	**E2KM3250MAW**	**E2KW3250MAW**
	500–1000	**E2K3400TMD**	**E2K3400MDW**	**E2KM3400MDW**	**E2KW3350MDW**
	625–1250	**E2K3400TMF**	**E2K3400MFW**	**E2KM3400MFW**	**E2KW3350MFW**
	750–1500	**E2K3400TMG**	**E2K3400MGW**	**E2KM3400MGW**	**E2KW3350MGW**
	875–1750	**E2K3400TMJ**	**E2K3400MJW**	**E2KM3400MJW**	**E2KW3350MJW**
	1000–2000	**E2K3400TMK**	**E2K3400MKW**	**E2KM3400MKW**	**E2KW3350MKW**
	1125–2250	**E2K3400TML**	**E2K3400MLW**	**E2KM3400MLW**	**E2KW3350MLW**
	1250–2500	**E2K3400TMW**	**E2K3400MWW**	**E2KM3400MWW**	**E2KW3350MWW**
	1500–3000	**E2K3400TMN**	**E2K3400MNW**	**E2KM3400MNW**	**E2KW3350MNW**
	1600–3200	—	—	—	**E2KW3350MVW**
	1750–3500	**E2K3400TMR**	**E2K3400MRW**	**E2KM3400MRW**	**E2KW3350MRW**
	2000–4000	**E2K3400TM**	**E2K3400MW**	**E2KM3400MW**	—

Notes

① Frame only: **E2K3400F**.
② Frame only: **E2KM3400F**.
③ 1200 V breakers are sold as "complete breakers" only.
④ Maximum continuous ampere rating at 50 °C.

Please see TD01217001E for detailed dimensions.

100 A–400 A

E²KE/E²KEM

E²KM

Circuit Breakers with Interchangeable Electronic Trip Units

Maximum Continuous Ampere Rating at 40 °C	Magnetic Trip Range	Trip Unit Only Catalog Number	600 Vac Maximum 250 Vdc 35 kA at 480 Vac Three-Pole ① Complete Breaker Catalog Number	1000Y/ 577 Vac Maximum 250 Vdc 14 kA at 1000 Vac Three-Pole ② Complete Breaker Catalog Number
310+ Electronic Instantaneous Only				
150	50–800	**KEM3150TM**	**E2KE3150MW**	**E2KEM3150MW**
225	200–1500	**KEM3225TM**	**E2KE3225MW**	**E2KEM3225MW**
	500–2500	**KEM3225TM2**	**E2KE3225M2W**	**E2KEM3225M2W**
400	200–1500	**KEM3400TM**	**E2KE3400MW**	**E2KEM3400MW**
	500–2500	**KEM3400TM2**	**E2KE3400M2W**	**E2KEM3400M2W**
310+ Electronic LSI ③				
100	50–800	**KEM3100T**	**E2KE3100W**	**E2KEM3100W**
125	50–800	**KEM3125T**	**E2KE3125W**	**E2KEM3125W**
150	50–800	**KEM3150T**	**E2KE3150W**	**E2KEM3150W**
200	200–1500	**KEM3200T**	**E2KE3200W**	**E2KEM3200W**
225	200–1500	**KEM3225T**	**E2KE3225W**	**E2KEM3225**
	500–2500	**KEM3225T2**	**E2KE32252W**	**E2KEM32252W**
400	200–1500	**KEM3400T**	**E2KE3400W**	**E2KEM3400W**
	500–2500	**KEM3400T2**	**E2KE34002W**	**E2KEM34002W**
310+ Electronic ALSI with Maintenance Mode ③				
100	50–800	**KEM310038T**	**E2KE310038W**	**E2KEM310038W**
125	50–800	**KEM312538T**	**E2KE312538W**	**E2KEM312538W**
150	50–800	**KEM315038T**	**E2KE315038W**	**E2KEM315038W**
200	200–1500	**KEM320038T**	**E2KE320038W**	**E2KEM320038W**
225	200–1500	**KEM322538T**	**E2KE322538W**	**E2KEM322538**
	500–2500	**KEM322538T2**	**E2KE3225238W**	**E2KEM3225238W**
400	200–1500	**KEM340038T**	**E2KE340038W**	**E2KEM340038W**
	500–2500	**KEM340038T2**	**E2KE3400238W**	**E2KEM3400238W**

Notes

① Frame only: **E2K3400F**.
② Frame only: **E2KM3400F**.
③ For High Load Alarm option (B20): **E2KE340038B20W, KEM3400TB20**.

Please see TD01217001E for detailed dimensions.

160 A–400 A

E^2LME/E^2LMZ (Series G)

Circuit Breakers

Maximum Continuous Ampere Rating at 40 °C	Magnetic Trip Range	Trip Unit Only Catalog Number	600 Vac Maximum 250 Vdc 35 kA at 480 Vac Three-Pole ① Complete Breaker Catalog Number	1000Y/ 577 Vac Maximum 250 Vdc 14 kA at 1000 Vac Three-Pole ② Complete Breaker Catalog Number
Magnetic Only				
400	3600–4400	**LT3400KM**	**E2LME3400KMW**	**E2LMZ3400KMW**
Interchangeable Electronic Trip Unit				
160	320–1920	**LT340031M**	**E2LME340031W**	**E2LMZ340031W**
200	400–2400	**LT340031M**	**E2LME340031W**	**E2LMZ340031W**
225	450–2700	**LT340031M**	**E2LME340031W**	**E2LMZ340031W**
250	500–3000	**LT340031M**	**E2LME340031W**	**E2LMZ340031W**
300	600–3600	**LT340031M**	**E2LME340031W**	**E2LMZ340031W**
315	630–3780	**LT340031M**	**E2LME340031W**	**E2LMZ340031W**
350	700–4200	**LT340031M**	**E2LME340031W**	**E2LMZ340031W**
400	800–4800	**LT340031M**	**E2LME340031W**	**E2LMZ340031W**

Notes

① Frame only: **E2LME3400NN**.

② Frame only: **E2LMZ3400NN**.

Please see TD01217001E for detailed dimensions.

300 A–600 A

E²L/E²LM/E²LW

Circuit Breakers with Interchangeable Non-Electronic Trip Units

Maximum Continuous Ampere Rating at 40 °C	Magnetic Trip Range	Trip Unit Only Catalog Number	600 Vac Maximum 250 Vdc 35 kA at 480 Vac Three-Pole ① Complete Breaker Catalog Number	1000Y/ 577 Vac Maximum 250 Vdc 18 kA at 1000 Vac Three-Pole ② Complete Breaker Catalog Number	1200 Vac Maximum 10 kA at 1200 Vac Three-Pole ③ Complete Breaker Catalog Number
Thermal-Magnetic					
300	1500–3000	**E2L3300T**	**E2L3300W**	**E2LM3300W**	**E2LW3300W**
320	2250–4500	**E2L3450T**	**E2L3450W**	**E2LM3450W**	**E2LW3320W**
350	1600–3200	—	—	—	**E2LW3350W**
400	1750–3500	**E2L3350T**	**E2L3350W**	**E2LM3350W**	**E2LW3400W**
450	2000–4000	**E2L3400T**	**E2L3400W**	**E2LM3400W**	**E2LW3450W**
500	2500–5000	**E2L3500T**	**E2L3500W**	**E2LM3500W**	—
600	3000–6000	**E2L3600T**	**E2L3600W**	**E2LM3600W**	—
	1125–2250	**E2L3600TL** ④	—	—	—
Magnetic Only					
450	1600–3200	—	—	—	**E2LW3450MVW**
	1125–2250	—	—	—	**E2LW3450MLW**
	1500–3000	—	—	—	**E2LW3450MNW**
	1750–3500	—	—	—	**E2LW3450MRW**
	2000–4000	—	—	—	**E2LW3450MXW**
	2250–4500	—	—	—	**E2LW3450MYW**
600	1125–2250	**E2L3600TML**	**E2L3600MLW**	**E2LM3600MLW**	—
	1500–3000	**E2L3600TMN**	**E2L3600MNW**	**E2LM3600MNW**	—
	1750–3500	**E2L3600TMR**	**E2L3600MRW**	**E2LM3600MRW**	—
	2000–4000	**E2L3600TMX**	**E2L3600MXW**	**E2LM3600MXW**	—
	2250–4500	**E2L3600TMY**	**E2L3600MYW**	**E2LM3600MYW**	—
	2500–5000	**E2L3600TMP**	**E2L3600MPW**	**E2LM3600MPW**	—
	3000–6000	**E2L3600TM**	**E2L3600MW**	**E2LM3600MW**	—

Notes

① Frame only: **E2L3600F**.
② Frame only: **E2LM3600F**.
③ Maximum continuous ampere rating at 50 °C.
④ 600 A thermal 1125–2250 T.A.

Please see TD01217001E for detailed dimensions.

300 A–600 A

E²LE/E²LEM

E²LM

Circuit Breakers with Interchangeable Electronic Trip Units

Maximum Continuous Ampere Rating at 40 °C	Magnetic Trip Range	Trip Unit Only Catalog Number	600 Vac Maximum 250 Vdc 35 kA at 480 Vac Three-Pole ① Complete Breaker Catalog Number	1000Y/ 577 Vac Maximum 250 Vdc 18 kA at 1000 Vac Three-Pole ② Complete Breaker Catalog Number
310+ Electronic Instantaneous Only				
400	500–2500	**LEM3400TM**	**E2LE3400MW**	**E2LEM3400MW**
	1000–4000	**LEM3400TM2**	**E2LE3400M2W**	**E2LEM3400M2W**
600	500–2500	**LEM3600TM**	**E2LE3600MW**	**E2LEM3600MW**
	2500–5000	**LEM3600TM2**	**E2LE3600M2W**	**E2LEM3600M2W**
310+ Electronic LSI ③				
300	500–2500	**LEM3300T**	**E2LE3300W**	**E2LEM3300W**
350	500–2500	**LEM3350T**	**E2LE3350W**	**E2LEM3350W**
400	500–2500	**LEM3400T**	**E2LE3400W**	**E2LEM3400W**
	1000–4000	**LEM3400T2**	**E2LE34002W**	**E2LEM34002W**
600	500–2500	**LEM3600T**	**E2LE3600W**	**E2LEM3600W**
	2500–5000	**LEM3600T2**	**E2LE36002W**	**E2LEM36002W**
310+ Electronic ALSI with Maintenance Mode ③				
300	500–2500	**LEM330038T**	**E2LE330038W**	**E2LEM330038W**
350	500–2500	**LEM335038T**	**E2LE335038W**	**E2LEM335038W**
400	500–2500	**LEM340038T**	**E2LE340038W**	**E2LEM340038W**
	1000–4000	**LEM340038T2**	**E2LE3400238W**	**E2LEM3400238W**
600	500–2500	**LEM360038T**	**E2LE360038W**	**E2LEM360038W**
	2500–5000	**LEM360038T2**	**E2LE3600238W**	**E2LEM3600238W**

Notes

① Frame only: **E2L3600F**.
② Frame only: **E2LM3600F**.
③ For High Load Alarm option (B20): **E2LE360038B20W, LEM3600TB20**.

Please see TD01217001E for detailed dimensions.

300 A— 800 A

$E^2M/E^2MM/E^2MW$

$E^2M/E^2MM/E^2MW$

Circuit Breakers with Interchangeable Non-Electronic Trip Units

Maximum Continuous Ampere Rating at 40 °C	Magnetic Trip Range	Trip Unit Only Catalog Number	600 Vac Maximum 250 Vdc 35 kA at 480 Vac Three-Pole ① Complete Breaker Catalog Number	1000Y/ 577 Vac Maximum 250 Vdc 18 kA at 1000 Vac Three-Pole ② Complete Breaker Catalog Number	1200 Vac Maximum 12 kA at 1200 Vac Three-Pole ③④ Complete Breaker Catalog Number
Thermal-Magnetic					
400	1000–2000	—	—	—	**E2MW3400W**
500	1250–2500	—	—	—	**E2MW3500W**
600	1500–3000	**E2M3600TN**	**E2M3600W**	**E2MM3600W**	**E2MW3600W**
630	1600–3200	—	—	—	**E2MW3630W**
800	2000–4000	**E2M3800TX**	**E2M3800W**	**E2MM3800W**	**E2MW3800W**
Magnetic Only					
800	1500–3000	**E2M3800TMN**	**E2M3800MNW**	**E2MM3800MNW**	**E2MW3800MNW**
	1600–3200	—	—	—	**E2MW3800MVW**
	2000–4000	**E2M3800TMX**	**E2M3800MXW**	**E2MM3800MXW**	**E2MW3800MXW**
	2500–5000	**E2M3800TMP**	**E2M3800MPW**	**E2MM3800MPW**	—
	3000–6000	**E2M3800TMW**	**E2M3800MWW**	**E2MM3800MWW**	—

Notes

① Frame only: **E2M3800F**.
② Frame only: **E2MM3800F**.
③ 1200 V breakers are sold as "complete breakers" only.
④ Maximum continuous ampere rating at 50 °C.

Please see TD01217001E for detailed dimensions.

800 A

E²ME/E²MEM

E²MN

Circuit Breakers with Interchangeable Electronic Trip Units

Maximum Continuous Ampere Rating at 40 °C	Magnetic Trip Range	Trip Unit Only Catalog Number	600 Vac Maximum 250 Vdc 35 kA at 480 Vac Three-Pole ① Complete Breaker Catalog Number	1000Y/ 577 Vac Maximum 250 Vdc 18 kA at 1000 Vac Three-Pole ② Complete Breaker Catalog Number
310+ Electronic Instantaneous Only				
800	500–2500	**MEM3800TM**	**E2ME3800MW**	**E2MEM3800MW**
	1000–4000	**MEM3800TM2**	**E2ME3800M2W**	**E2MEM3800M2W**
310+ Electronic LSI ③				
800	500–2500	**MEM3800T**	**E2ME3800W**	**E2MEM3800W**
	1000–4000	**MEM3800T2**	**E2ME38002W**	**E2MEM38002W**
310+ Electronic ALSI with Maintenance Mode ③				
800	500–2500	**MEM380038T**	**E2ME380038W**	**E2MEM380038W**
	1000–4000	**MEM380038T2**	**E2ME3800382W**	**E2MEM3800382W**

Notes

① Frame only: **E2M3800F**.
② Frame only: **E2MM3800F**.
③ For High Load Alarm option (B20): **E2ME380038B20W, MEM3800TB20**.

Please see TD01217001E for detailed dimensions.

400 A–1200 A

E²N/E²NM

E²NM

Circuit Breakers with Interchangeable Electronic Trip Units

Maximum Continuous Ampere Rating at 40 °C	Magnetic Trip Range	Trip Unit Only Catalog Number	600 Vac Maximum 250 Vdc 35 kA at 480 Vac Three-Pole Complete Breaker Catalog Number	1000Y/ 577 Vac Maximum 250 Vdc 18 kA at 1000 Vac Three-Pole Complete Breaker Catalog Number
310+ Electronic Instantaneous Only				
800	500–2500	—	**E2N3800MW**	**E2NM3800MW**
1200	1250–5000	—	**E2N312MW**	**E2NM312MW**
310+ Electronic LSI ①				
400	500–2500	—	**E2N3400W**	**E2NM3400W**
500	500–2500	—	**E2N3500W**	**E2N3M500W**
600	500–2500	—	**E2N3600W**	**E2NM3600W**
700	500–2500	—	**E2N3700W**	**E2NM3700W**
800	500–2500	—	**E2N3800W**	**E2NM3800W**
900	1250–5000	—	**E2N3900W**	**E2NM3900W**
1000	1250–5000	—	**E2N310W**	**E2NM310W**
1200	1250–5000	—	**E2N312W**	**E2NM312W**
310+ Electronic ALSI with Maintenance Mode ①				
400	500–2500	—	**E2N340038W**	**E2NM340038W**
500	500–2500	—	**E2N350038W**	**E2NM350038W**
600	500–2500	—	**E2N360038W**	**E2NM360038W**
700	500–2500	—	**E2N370038W**	**E2NM370038W**
800	500–2500	—	**E2N380038W**	**E2NM380038W**
900	1250–5000	—	**E2N390038W**	**E2NM390038W**
1000	1250–5000	—	**E2N31038W**	**E2NM31038W**
1200	1250–5000	—	**E2N31238W**	**E2NM31238W**

Notes

① For High Load Alarm option (B20): **E2N380038B20W**.

Please see TD01217001E for detailed dimensions.

1600 A–2000 A

E²R/E²RM

E²RM

Circuit Breakers with Electronic Trip Units

Maximum Continuous Ampere Rating at 40 °C	Magnetic Trip Range	Trip Unit Only Catalog Number	600 Vac Maximum 250 Vdc 35 kA at 480 Vac Three-Pole Complete Breaker Catalog Number	1000Y/ 577 Vac Maximum 250 Vdc 18 kA at 1000 Vac Three-Pole Complete Breaker Catalog Number
310+ Electronic LSI ①				
1600	2–8 x I_n	—	**E2R316W**	**E2RM316W**
2000	2–8 x I_n	—	**E2R320W**	**E2RM320W**
310+ Electronic ALSI with Maintenance Mode ①				
1600	2–8 x I_n	—	**E2R31638W**	**E2RM31638W**
2000	2–8 x I_n	—	**E2R32038W**	**E2RM32038W**

Notes

① For High Load Alarm option (B20): **E2R1638B20W**.

Please see TD01217001E for detailed dimensions.

Accessories

Line and Load Terminals

Breaker Type	Maximum Breaker Amperes	Wire Type	AWG Wire Range (No. Conductors)	Catalog Number
E^2F/E^2FM	100	Cu/Al	#14–1/0 (1)	**3T100FB** (package of three)
	150	Cu	#4–4/0 (1)	**3T150FB** (package of three)
E^2J/E^2JM	250	Cu	#4–350 (1)	**T250KB**
$E^2K/E^2KM/E^2KW$	225	Cu	#3–350 (1)	**T300K**
	350	Cu	250–500 (1)	**T350K**
	400	Cu	2/0–250 (2)	**3T400K** (three-pole kit)
E^2LME/E^2LMZ	400	Cu/Al	500–750 (1)	**3TA631LK**
$E^2L/E^2LM/E^2LW$	400	Cu/Al	4/0–600 (1)	**3TA401LDK** (three-pole kit)
	600	Cu	250–350 (2)	**T602LD**
$E^2M/E^2MM/E^2MW$	600	Cu	(2) 2/0–500 kcmil	**T600MA1**
	600	Cu/Al	(2) 1–500 kcmil	**TA700MA1**
	800 std.	Cu/Al	(3) 3/0–400 kcmil	**TA800MA2**
	800	Cu/Al	(2) 500–750 kcmil	**TA801MA**
	800	Cu	(3) 3/0–300 kcmil	**T800MA1**
E^2N/E^2NM	700	Cu	2/0–500 (2)	**T700NB1**
	1000	Cu	3/0–500 (3)	**T1000NB1**
	1200	Cu	3/0–400 (4)	**T1200NB3**
	1600	Cu/Al	500–1000 (4)	**TA1600RD**
	2000	Cu/Al	2–600 (6)	**TA2000RD**

End Cap Terminals—For Use with Ring Type Terminals

Breaker Type	Maximum Breaker Amperes	Catalog Number	Metric Catalog Number	Imperial
E^2F/E^2FM	150	**KPEK1**	**KPEMK1**	—
E^2J/E^2JM	250	**KPEK2**	**KPEMK2**	—
$E^2K/E^2KM/E^2KW$	400	**KPEK3**	**KPEMK3**	—
E^2LME/E^2LMZ	400	—	**L3RTWK**	—
$E^2L/E^2LM/E^2LW$	600	**KPEK4**	**KPEMK4**	—

External Accessories

Padlockable Handle Lock Hasp

Breaker Type	Catalog Number
E^2F/E^2FM	**PLK1**
E^2J/E^2JM	**PLK3**
$E^2K/E^2KM/E^2KW$	**PLK3**
E^2LME/E^2LMZ	**LPHL**
$E^2L/E^2LM/E^2LW$	**HLK4**
$E^2M/E^2MM/E^2MW$	**HLK4**
E^2N/E^2NM	**PLK5**
E^2R/E^2RM	**HLK6**

Internal Accessories

Undervoltage Release ①

Breaker Type	UVR Type	Voltage Rating	Mounting Location	Catalog Number	Factory Modification Code
E^2F/E^2FM	Handle reset	208–240 Vac	Left pole	**UVH1LP11K** (thermal/magnetic only) ②	U18
	Handle reset	110–127 Vdc	Left pole	**UVH1LP26K** (thermal/magnetic only) ②	U42
E^2J/E^2JM	Handle reset	110–127 Vac	Left pole	**UVH2LP08K** ②	U18
	Handle reset	208–240 Vac	Left pole	**UVH2LP11K** ②	U22
	Handle reset	110–125 Vdc	Left pole	**UVH2LP26K** ②	T14
$E^2K/E^2KM/E^2KW$	120 volt handle reset with LED	120 Vac	Left pole	**UVM3LP08K** ②③	U66
	120 volt handle reset with LED	120 Vac	Left pole	**UVM3LP08KT** ②④	U68
	Handle reset	110–127 Vac	Left pole	**UVH3LP08K** ②	U18
	Handle reset	208–240 Vac	Left pole	**UVH3LP11K** ②	U22
	Handle reset	110–125 Vdc	Left pole	**UVH3LP26K** ②	T14
E^2LME/E^2LMZ	Handle reset	110–127 Vac	Left pole	**UVR120APK**	U5
	Handle reset	110–125 Vdc	Left pole	**UVR125DPK**	U6
$E^2L/E^2LM/E^2LW/E^2M/E^2MM/E^2MW$	120 volt handle reset with LED	120 Vac	Left pole	**UVM4LP08K** ②③	U66
	120 volt handle reset with LED	120 Vac	Left pole	**UVM4LP08KT** ②④	U68
	Handle reset	110–127 Vac	Left pole	**UVH4LP08K** ②	U18
	Handle reset	208–240 Vac	Left pole	**UVH4LP11K** ②	U22
	Handle reset	110–125 Vdc	Left pole	**UVH4LP26K** ②	T14
E^2N/E^2NM	120 volt handle reset with LED	120 Vac	Left pole	**UVM5LP08K** ③	U66
	120 volt handle reset with LED	120 Vac	Left pole	**UVM5LT08K** ④	U68
	Handle reset	110–127 Vac	Left pole	**UVH5LP08K** ②	U18
	Handle reset	208–240 Vac	Left pole	**UVH5LP11K** ②	U22
	Handle reset	110–125 Vdc	Left pole	**UVH5LP26K** ②	T14
E^2R/E^2RM	120 volt handle reset with LED	120 Vac	Right pole	**UVM6RP08K** ③⑤	U58
	Handle reset	110–127 Vac	Right pole	**UVH6RP08K** ⑤	U49
	Handle reset	208–240 Vac	Right pole	**UVH6RP11K** ⑤	U53
	Handle reset	110–125 Vdc	Right pole	**UVH6RP26K** ⑤	T33

Notes

① Contact Eaton for internal accessory voltage ratings not listed.
② LH (RH also available).
③ Pigtail leads.
④ Terminal blocks.
⑤ RH only.

Shunt Trip ①

Breaker Type	Voltage Rating	Mounting Location	Catalog Number	Factory Modification Code
E^2F/E^2FM	48–127 Vac or 48–60 Vdc	Left pole	**SNT1LP08K** ②	S06
	208–230 Vac or 110–127 Vdc	Left pole	**SNT1LP12K** ②	S10
E^2J/E^2JM	110–240 Vac or 110–125 Vdc	Left pole	**SNT2P11K** ③	S10
$E^2K/E^2KM/E^2KW$	110–240 Vac or 110–125 Vdc	Left pole	**SNT3P11K** ③	S10
E2LME/E2LMZ	24 Vac/Vdc	Left pole	**SNT024CPK**	S6
	48–60 Vac/Vdc	Left pole	**SNT4860CPK**	S7
	110–240 Vac/Vdc	Left pole	**SNT120CPK**	S2
$E^2L/E^2LM/E^2LW/E^2M/E^2MM/E^2MW$	48–60 Vac	Left pole	**SNT4LP05K** ②	S06
	48–60 Vdc	Left pole	**SNT4LP23K** ②	S86
	110–240 Vac	Left pole	**SNT4LP11K** ②	S10
	110–125 Vdc	Left pole	**SNT4LP26K** ②	S42
E^2N/E^2NM	110–240 Vac	Left pole	**SNT5LP11K** ②	S10
	110–125 Vdc	Left pole	**SNT5LP26K** ②	S42
E^2R/E^2RM	110–240 Vac	Right pole	**SNT6P11K** ④	S29
	110–125 Vdc	Right pole	**SNT6P26K** ④	S45

Auxiliary Switch

Breaker Type	Number of Sets of Contacts (1A and 1B)	Mounting Location	Catalog Number	Factory Modification Code
E^2F/E^2FM	1	Right	**A1X1PK**	A06
	2	Right	**A2X1RPK**	A13
E^2J/E^2JM	1	Right	**A1X2PK**	A06
	2	Right	**A2X2PK**	A13
$E^2K/E^2KM/E^2KW$	1	Right	**A1X3PK**	A06
	2	Right	**A2X3PK**	A13
E^2LME/E^2LMZ	1	Right	**AUX1A1BPK**	A1
	2	Right	**AUX2A2BPK**	A2
$E^2L/E^2LM/E^2LW/E^2M/E^2MM/E^2MW$	1	Right	**A1X4PK**	A06
	2	Right	**A2X4PK**	A13
E^2N/E^2NM	1	Right	**A1X5PK**	A06
	2	Right	**A2X5PK**	A13
E^2R/E^2RM	2	Right	**A2X6RPK**	A12
	4	Right	**A4X6RPK**	A19

Alarm (Signal/Lockout Switch)

Breaker Type	Number of Sets of Contacts (Make and Break)	Mounting Location	Catalog Number	Factory Modification Code
E^2F/E^2FM	1	Right	**A1L1LPK/A1L1RPK**	B06
	2	Right	**A2L1LPK/A2L1RPK**	B13
E^2J/E^2JM	1	Right	**A1L2LPK/A1L2RPK**	B06
$E^2K/E^2KM/E^2KW$	1	Right	**A1L3LPK/A1L3RPK**	B06
	2	Right	**A2L3LPK/A2L3RPK**	B13
E^2LME/E^2LMZ	1	Right	**ALM1M1BJPK**	B1
	2	Right	**ALM2M2BJPK**	B3
$E^2L/E^2LM/E^2LW/E^2M/E^2MM/E^2MW$	1	Right	**A1L4LPK/A1L4RPK**	B06
	2	Right	**A2L4LPK/A2L4RPK**	B13
E^2N/E^2NM	1	Right	**A1L5LPK/A1L5RPK**	B06
	2	Right	**A2L5LPK/A2L5RPK**	B13
E^2R/E^2RM	1	Right	**A1L6RPK**	B05
	2	Right	**A2L6RPK**	B12

Notes

① Contact Eaton for internal accessory voltage ratings not listed.
② LH (RH also available).
③ LH or RH.
④ RH only.

Dimensions

Approximate Dimensions in Inches (mm)

Please see TD01217001E for detailed dimensions.

3 A–150 A

E^2F/E^2FM
Sealed Breakers with Non-Interchangeable Trip Unit—Include Line/Load Terminals Non-Electronic Trip Units

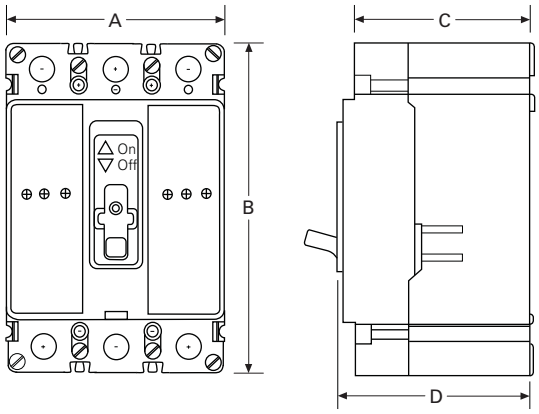

Front View Side View

Description	Dimensions in Inches (mm)
A	4.13 (104.9)
B	6.00 (152.4)
C	3.38 (85.9)
D	3.50 (88.9)

70 A–250 A

E^2J/E^2JM
Circuit Breakers with Interchangeable Non-Electronic Trip Units

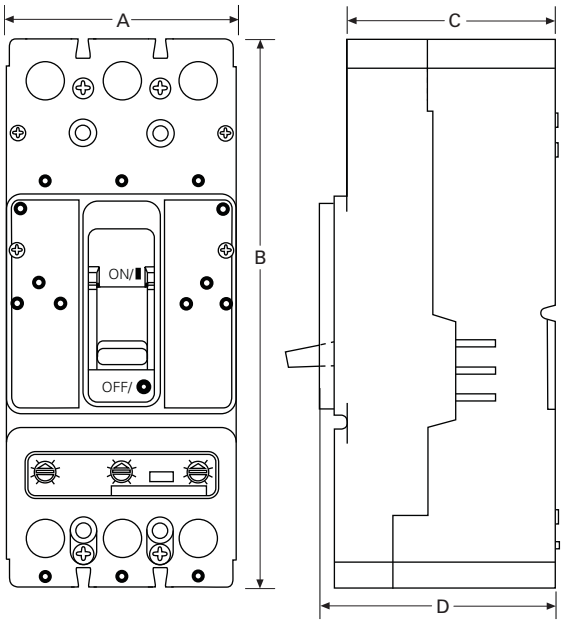

Front View Side View

Description	Dimensions in Inches (mm)
A	4.13 (104.9)
B	10.00 (254.0)
C	4.06 (103.1)
D	4.31 (109.5)

Approximate Dimensions in Inches (mm)

Please see TD01217001E for detailed dimensions.

100 A–400 A

$E^2K/E^2KM/E^2KW$
Circuit Breakers with Interchangeable Non-Electronic Trip Units

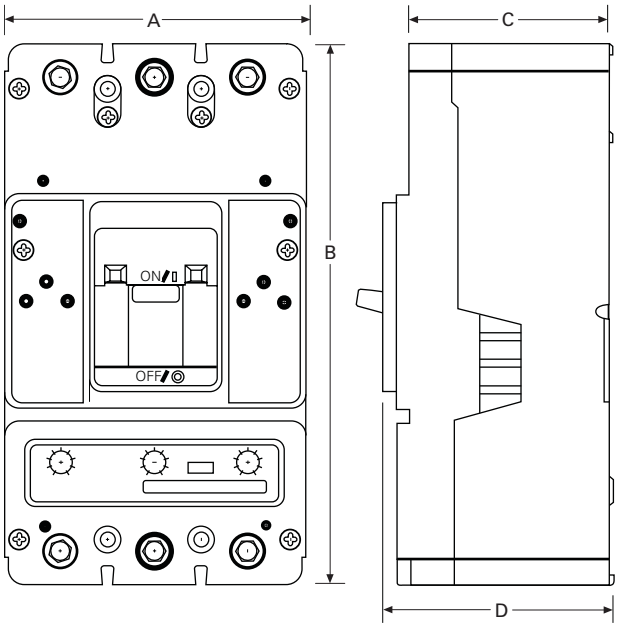

Front View Side View

Description	Dimensions in Inches (mm)
A	5.49 (139.4)
B	10.13 (257.3)
C	4.06 (103.1)
D	4.31 (109.5)

100 A–400 A

E^2KE/E^2KEM
Circuit Breakers with Interchangeable Electronic Trip Units

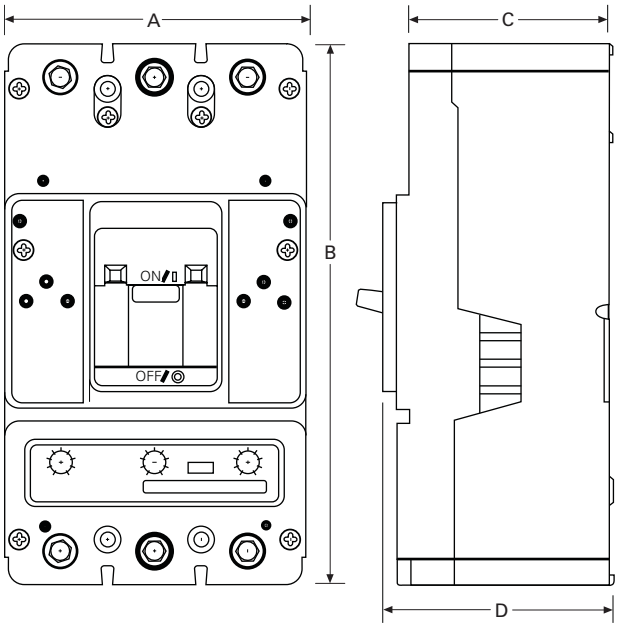

Front View Side View

Description	Dimensions in Inches (mm)
A	5.49 (139.4)
B	10.13 (257.3)
C	4.06 (103.1)
D	4.31 (109.5)

Approximate Dimensions in Inches (mm)

Please see TD01217001E for detailed dimensions.

160 A–400 A

E^2LME/E^2LMZ Circuit Breakers

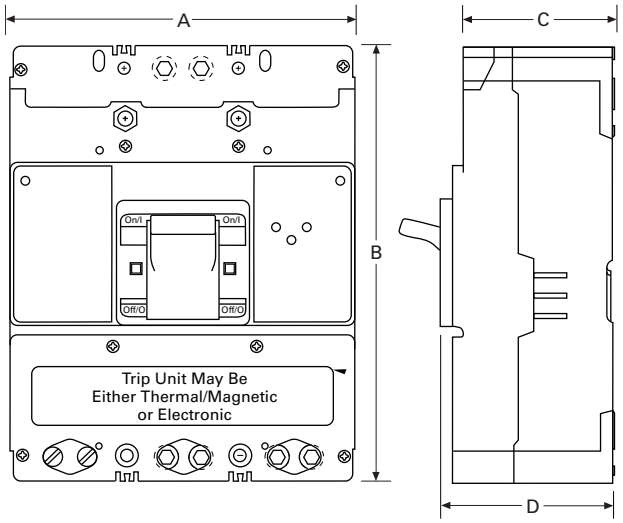

Front View Side View

Description	Dimensions in Inches (mm)
A	5.48 (139.2)
B	10.13 (257.3)
C	4.00 (101.6)
D	4.22 (107.1)

300 A–600 A

$E^2L/E^2LM/E^2LW$ Circuit Breakers with Interchangeable Electronic Trip Units

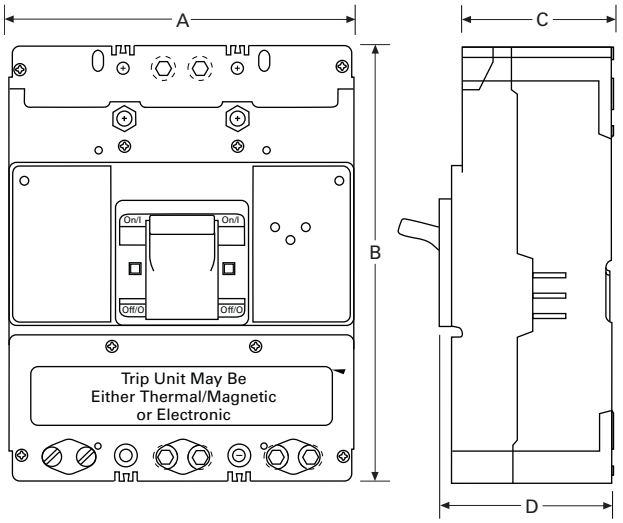

Front View Side View

Description	Dimensions in Inches (mm)
A	8.25 (209.6)
B	10.75 (273.1)
C	4.06 (103.1)
D	4.38 (111.3)

Approximate Dimensions in Inches (mm)

Please see TD01217001E for detailed dimensions.

300 A–600 A

E^2LE/E^2LEM
Circuit Breakers with Interchangeable Electronic Trip Units

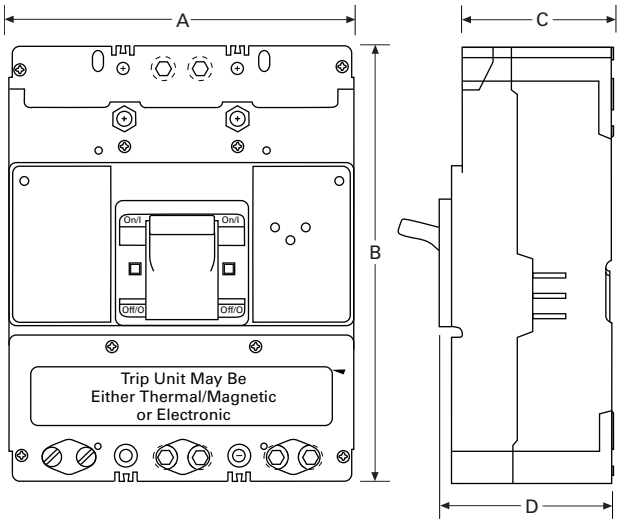

Front View Side View

Description	Dimensions in Inches (mm)
A	8.25 (209.6)
B	10.75 (273.1)
C	4.06 (103.1)
D	4.38 (111.3)

300 A–800 A

$E^2M/E^2MM/E^2MW$
Circuit Breakers with Interchangeable Non-Electronic Trip Units

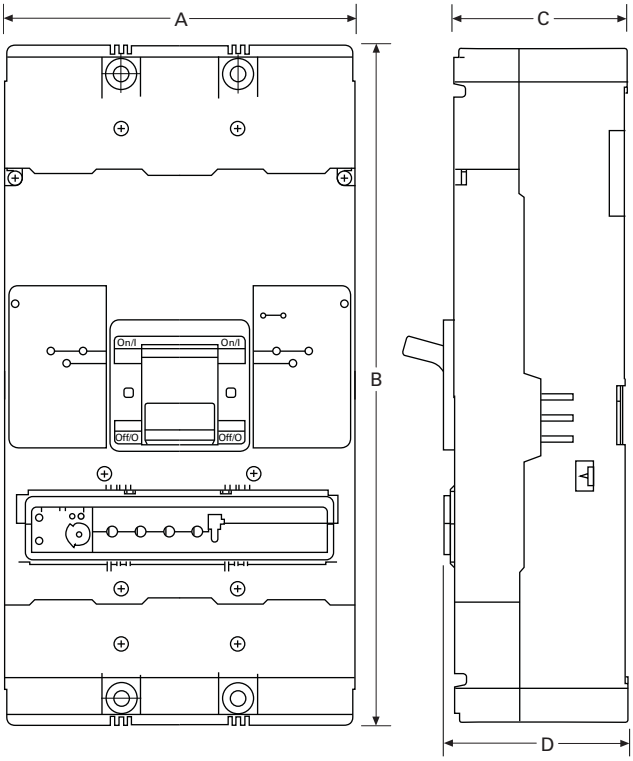

Front View Side View

Description	Dimensions in Inches (mm)
A	8.25 (209.6)
B	16.00 (406.4)
C	4.06 (103.1)
D	4.38 (111.3)

Approximate Dimensions in Inches (mm)

Please see TD01217001E for detailed dimensions.

800 A

E^2ME/E^2MEM
Circuit Breakers with Interchangeable Electronic Trip Units

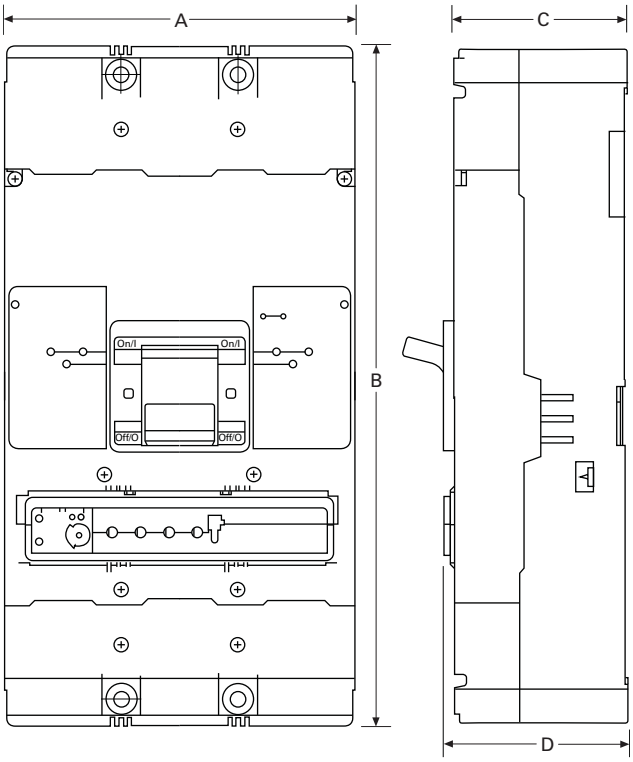

Front View Side View

Description	Dimensions in Inches (mm)
A	8.25 (209.6)
B	16.00 (406.4)
C	4.06 (103.1)
D	4.38 (111.3)

400 A–1200 A

E^2N/E^2NM
Circuit Breakers with Interchangeable Electronic Trip Units

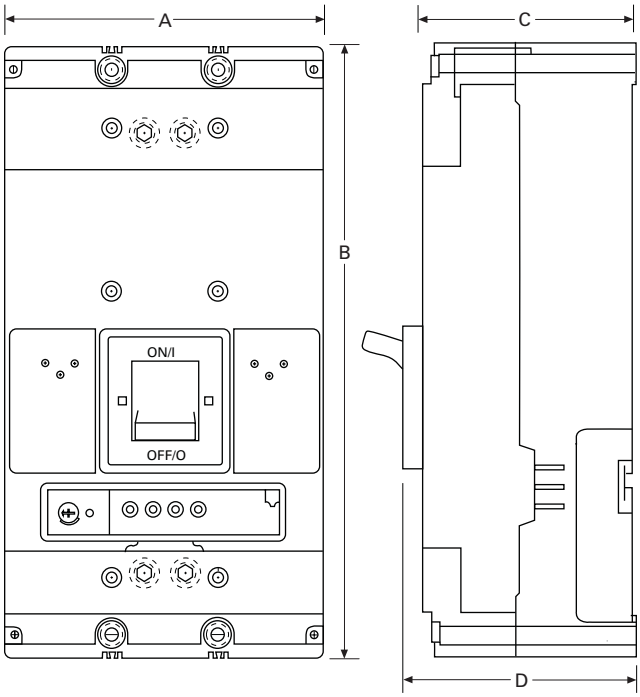

Front View Side View

Description	Dimensions in Inches (mm)
A	8.25 (209.6)
B	16.00 (406.4)
C	5.50 (139.7)
D	6.00 (152.4)

Approximate Dimensions in Inches (mm)

Please see TD01217001E for detailed dimensions.

1600 A–2000 A

E^2R/ E^2RM
Circuit Breakers with Electronic Trip Units

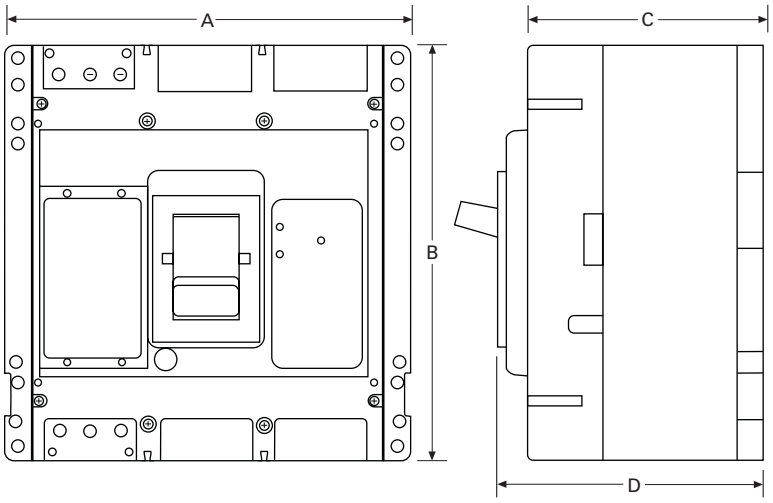

Front View Side View

Description	Dimensions in Inches (mm)
A	15.50 (393.7)
B	16.00 (406.4)
C	9.00 (228.6)
D	10.00 (254.0)

E2VAC Mining Vacuum Circuit Breaker

Contents

Description	*Page*
Engine Generator Circuit Breakers	**V4-T2-341**
Direct Current Circuit Breakers	**V4-T2-347**
PVGard Solar Circuit Breakers—600 Vdc Per-Pole and 1000 Vdc Poles-in-Series	**V4-T2-361**
E^2 Mining Service Breakers	**V4-T2-374**
E2VAC Mining Vacuum Circuit Breaker	
Catalog Number Selection	**V4-T2-401**
Product Selection	**V4-T2-401**
Dimensions	**V4-T2-402**
Classic Mining Breakers	
Add-On Ground Fault Protection—Type GFR	**V4-T2-417**

E2VAC Mining Vacuum Circuit Breaker

Product Overview

The Eaton E2VAC mining vacuum circuit breaker is a vacuum-based solution with advanced communications, designed to improve safety, reliability and productivity.

Available in 480, 600 and 1000 Vac styles, the E2VAC provides protection for up to 500 A in motor circuits and trailing cables. By using vacuum contactors to make and break line/load connections, the dangers of an external arc flash are eliminated while reliably switching normal load and high stress fault currents.

The E2VAC can be installed as a fixed breaker, but it is also available with remote racking capability that allows personnel to remove the breaker from service:

- While standing at a safe distance from the breaker
- Completely disconnecting the breaker from live voltage without having to depower the entire power center for maintenance

Eaton's EDR-5000 distribution relay is fully integrated into the E2VAC breaker and provides advanced monitoring capability for real power, reactive power, power factor and frequency in addition to the standard voltage, current and phase angle measurements.

Application Description

Combining robust circuit protection and safety features with state-of-the-art monitoring capability, the E2VAC breaker is ideal for underground power center applications.

Features and Benefits

- Industry-leading vacuum interrupter (VI) technology used to eliminate the risk of external arc flash; includes VI malfunction detection
- Blown fuse detection with audible and visible indication
- Phase loss and open CT detection
- Dust-tight receptacle supplies power from the front of the breaker
- EDR-5000 distribution relay provides voltage, current and phase angle monitoring capability
- Instantaneous protection for short circuit and ground faults; phase imbalance and undervoltage protection
- Advanced user interface with LEDs and LCD screen for fault indication and keypad for programming
- Vacuum sealed contacts improve the equipment life, especially in harsh environments

Key Differentiators

- Remote racking capability greatly increases service accessibility and safety by keeping the operator at a great distance from the arc flash
- Maintenance Mode enables lower instantaneous pickups to minimize the risk of arc flash energy release during breaker service
- Advanced monitoring capability for kW, kVAR, power factor and frequency
- Reports sequence of up to 300 events and stores fault data for up to 20 faults
- Reduced footprint allows users to maximize space in the power center

Catalog Number Selection

E2VAC Mining Vacuum Circuit Breaker

E2VAC R 480V 3 400

Frame	
Blank	= Fixed
R	= Remote racking

Voltage	
480V	= 480 Vac max.
600V	= 600 Vac max.
1000V	= 1000Y/577 Vac max.

Number of Poles
3 = Three-pole

Current Rating
300 = 300 A
400 = 400 A
600 = 600 A

Product Selection

E2VAC

E2VAC Mining Circuit Breakers with EDR-5000 Relay

Maximum Continuous Ampere Rating at 40 °C	Trip Range	480 Vac Maximum 100 kA, Three-Pole Catalog Number	600 Vac Maximum 100 kA, Three-Pole Catalog Number	1000 Vac Maximum 100k A, Three-Pole Catalog Number
Fixed Standard Breaker				
300	50–320	**E2VAC480V3300**	**E2VAC600V3300**	**E2VAC1000V3300**
400	265–405	**E2VAC480V3400**	**E2VAC600V3400**	**E2VAC1000V3400**
600	408–600	**E2VAC480V3600**	**E2VAC600V3600**	**E2VAC1000V3600**
Standard Breaker with Remote Racking				
300	50–320	**E2VACR480V3300**	**E2VACR600V3300**	**E2VACR1000V3300**
400	265–405	**E2VACR480V3400**	**E2VACR600V3400**	**E2VACR1000V3400**
600	408–600	**E2VACR480V3600**	**E2VACR600V3600**	**E2VACR1000V3600**

Dimensions

Approximate Dimensions in Inches (mm)

Fixed Standard E2VAC Breaker

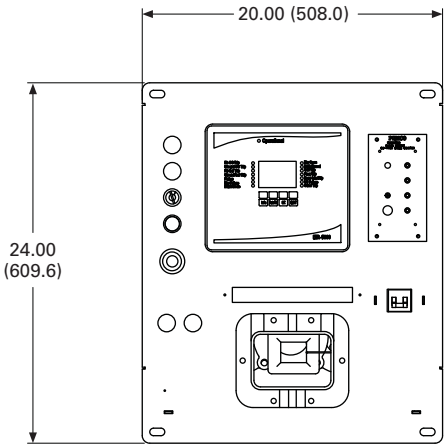

Front View

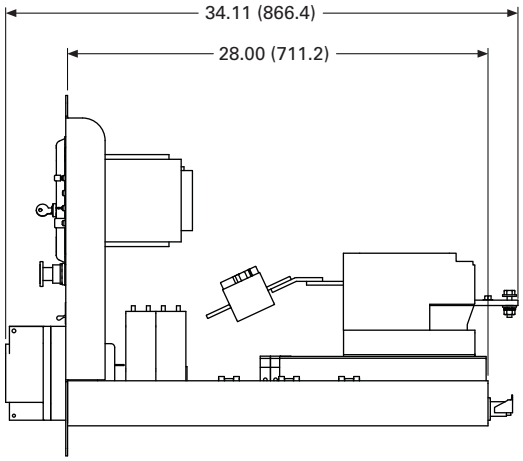

Side View

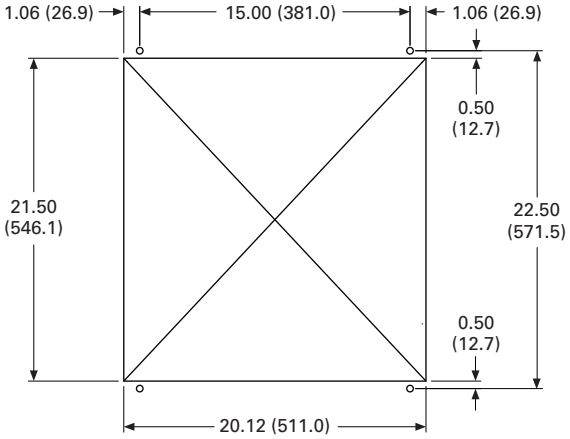

Recommended Cutout

Contents

Description	*Page*
Engine Generator Circuit Breakers	**V4-T2-341**
Direct Current Circuit Breakers	**V4-T2-347**
PVGard Solar Circuit Breakers—600 Vdc Per-Pole and 1000 Vdc Poles-in-Series	**V4-T2-361**
E^2 Mining Service Breakers	**V4-T2-374**
E2VAC Mining Vacuum Circuit Breaker	**V4-T2-400**
Classic Mining Breakers	
Product Selection	**V4-T2-405**
Accessories	**V4-T2-410**
Reference Information	**V4-T2-412**
Add-On Ground Fault Protection—Type GFR	**V4-T2-417**

Classic Mining Breakers

Product Overview

Classic mining service circuit breakers continue to be manufactured and are primarily applied to achieve an exact physical and electronic replacement of previously Cutler-Hammer installed Westinghouse equipment. To upgrade to the current offering of E^2 mining circuit breakers, consult the cross reference information on **Page V4-T2-412.**

AC Interrupting Capacity, Symmetrical Amperes

	Breaker Type				
60 Hz AC Volts	**KAM**	**LAM, MAM, NBM**	**HKAM**	**HLAM ②**	**All Other 1000 Volt Breakers ②**
240	25,000	42,000	—	—	—
480	22,000	30,000	—	—	—
600	22,000	22,000	—	—	—
1000 ①	—	—	10,000	12,000	14,000

Special DC Interrupting Capacity

		Interrupting Capacity (Amperes) at 300–330 Vdc			
		Single-Pole		Two Poles in Series ④	
Breaker Type	**Maximum Ampere Rating**	**0.0–0.15 mH Inductance ③**	**0.15–0.5 mH Inductance**	**0.5–0.9 mH Inductance**	**2.4 mH Inductance**
KAM	225	15,000	10,000	15,000	5000
LAM	400/600	15,000	10,000	15,000	5000
MAM	800	15,000	10,000	15,000	5000
NBM	1200	15,000	10,000	15,000	5000

Notes

① Based on circuit power factor of 50% or greater.
② HLAM must be rear stud connected. If front connected, interrupting capacity rating is 10,000 amperes.
③ Resistive circuit.
④ Two poles in electrical series in ungrounded leg of circuit.

Classic Circuit Breakers For Mining Service

Undervoltage Release Data

Undervoltage releases are calibrated to pick up at 72 to 85% of rated voltage dropout between 35 to 70% of rated voltage.

Breaker Type	Volts	Line Amperes	Series Resistors ①	Total VA
KAM, HKAM ①	480/60	0.021	10,000	10.1
	240/60	0.019	—	4.6
	120/60	0.021	—	2.5
	120/60 ②	0.13	—	15.6
LAM, HLAM, MAM, HMAM, NBM, HNBM ①	480/60	0.033	12,000 ③	15.9
	240/60	0.028	6,000	6.7
	120/60	0.029	—	3.5
	120/60 ②	0.13	—	15.6

Shunt Trip Coil Data

Breaker Type	Volts	Amperes	VA
KAM, HKAM, LAM, HLAM, MAM, HMAM, NBM, HNBM	480/60	0.085	40.8
	240/60	1.7	408
	120/60	0.88	105.6
	48 DC	8.0	384

Notes

① Supplied for external customer mounting.
② New design electrical reset UVR.
③ 16,000 for Type MAM and HMAM.

Product Selection

For reference only. Replace these frames with E2 Series. See Cross-Reference information beginning on **Page V4-T2-412**.

Classic Mining Service Circuit Breakers

Breaker Type	Frame Style Numbers ①②	Poles	Amperes	Trip Type	Accessories (Included in Frame)	Magnetic Trip Range, Amperes ③
KAM	**2609D60G64**	2	180	M	None	200–400
	1291C26G07	2	180	M	UVR ④	200–400
	2609D60G66	2	180	M	Standard shunt trip ③	200–400
	1291C26G01	2	225	TM	UVR ④	300–700
	1291C26G02	2	225	TM	UVR ④	500–1000
	2609D60G67	3	180	M	None	200–400
	1291C26G08	3	180	M	UVR ④	200–400
	2609D60G69	3	180	M	Standard shunt trip ③	200–400
	5685D48G75	3	225	TM	None	300–700
	5685D48G74	3	225	TM	None	500–1000
	1291C26G03	3	225	TM	UVR ④	300–700
	1291C26G04	3	225	TM	UVR ④	500–1000
	2609D60G01	3	225	TM	Standard shunt trip ③	300–700
	2609D60G02	3	225	TM	Standard shunt trip ③	500–1000
	2609D60G40	3	225	M	None	300–700
	2609D60G41	3	225	M	None	500–700
	1291C26G05	3	225	M	UVR ④	300–700
	1291C26G06	3	225	M	UVR ④	500–1000
LAM	**1291C32G01**	2	400	TM	UVR ④	500–1000
	2609D60G61	2	400	M	Shunt trip (48 Vdc)	750–1500
	1291C32G03	3	400	TM	UVR ④	500–1000
	5685D48G73	3	400	TM	None	800–1600
	1291C32G02	3	400	TM	UVR ④	800–1600
	2609D60G03	3	400	TM	Standard shunt trip ③	800–1600
	2609D60G44	3	400	M	None	800–1600
	1291C32G04	3	400	M	UVR ④	800–1600

Notes

① Terminals not included in style number.
② All breakers listed are complete with accessories indicated.
③ Rated 120 volts/60 Hz: undervoltage release is handle reset type.
④ UVR is auto-reset type, 120 Vac.

M = magnetic only; TM = thermal-magnetic.

For reference only. Replace these frames with E2 Series. See Cross-Reference information beginning on **Page V4-T2-412**.

Classic Mining Service Circuit Breakers, continued

Breaker Type	Frame Style Numbers ①②	Poles	Amperes	Trip Type	Accessories (Included in Frame)	Magnetic Trip Range, Amperes ③
MAM	**2609D60G17**	2	600	TM	UVR ③	750–1500
	2609D60G18	2	800	TM	UVR ③	1000–2000
	2609D60G63	3	400	TM	UVR ③	2000–4000
	5685D48G72	3	600	TM	None	1500–3000
	2609D60G19	3	600	TM	UVR ③	1500–3000
	2609D60G04	3	600	TM	Standard shunt trip ③	1500–3000
	2609D60G05	3	800	TM	Standard shunt trip ③	2000–4000
	5685D48G71	3	800	TM	None	2000–4000
	2609D60G20	3	800	TM	UVR ③	2000–4000
	2609D60G46	3	800	M	None	1500–3000
	2609D60G47	3	800	M	UVR ③	1500–3000
	2609D60G48	3	800	M	None	2000–4000
	2609D60G49	3	800	M	UVR ③	2000–4000
NBM	**1229C37G13**	2	1000	TM	UVR ④	1500–3000
	1229C37G14	2	1200	TM	UVR ④	2000–4000
	1227C36G10	3	1000	TM	None	2500–5000
	1229C37G15	3	1000	TM	UVR ④	2500–5000
	1227C36G13	3	1000	TM	Standard shunt trip ③	2500–5000
	1227C36G14	3	1200	TM	Standard shunt trip ③	2500–5000
	1227C36G09	3	1200	TM	None	2500–5000
	1229C37G16	3	1200	TM	UVR ④	2500–5000
	1227C36G19	3	1200	M	None	2500–5000
	1229C37G17	3	1200	M	UVR ④	2500–5000

Notes

① Terminals not included in style number.
② All breakers listed are complete with accessories indicated.
③ Rated 120 volts/60 Hz: undervoltage release is handle reset type.
④ UVR is auto-reset type, 120 Vac.

M = magnetic only; TM = thermal-magnetic.

1000 Volt Classic Mining Service Circuit Breakers

	Breaker Type	Frame Style Numbers	Poles	Amperes	Trip Type	Accessories (Included in Frame)	Magnetic Trip Range, Amperes ①
HKAM	HKAM	**2609D60G70**	3	180	M	None	200–400
		1291C26G16	3	180	M	UVR ②	200–400
		5685D48G87	3	225	TM	None	300–700
		1291C26G12	3	225	TM	UVR ②	300–700
		5685D48G86	3	225	TM	None	500–1000
		1291C26G13	3	225	TM	UVR ②	500–1000
		1291C26G14	3	225	M	UVR ②	300–700
		1291C26G15	3	225	M	UVR ②	500–1000
HLAM	HLAM	**5685D48G85**	3	400	TM	None	800–1600
		1291C32G07	3	400	TM	UVR ②	800–1600
		1291C32G09	3	400	M	UVR ②	800–1600
HMAM	HMAM	**5685D48G84**	3	600	TM	None	1500–3000
		2609D60G28	3	600	TM	UVR ③	1500–3000
		5685D48G83	3	800	TM	None	2000–4000
		2609D60G29	3	800	TM	UVR ③	2000–4000
		2609D60G57	3	800	M	UVR ③	1500–3000
		2609D60G58	3	800	M	UVR ③	2000–4000
HNAM	HNBM	**1227C36G12**	3	1000	TM	None	2500–5000
		1229C37G19	3	1000	TM	UVR ②	2500–5000
		1227C36G11	3	1200	TM	None	2500–5000
		1229C37G20	3	1200	TM	UVR ②	2500–5000
		1229C37G18	3	1200	M	UVR ②	2500–5000

Notes

① The magnetic trip range does not change when rating plug is changed.
② 120 volt, 60 Hz electrical reset type.
③ Rated 120 volts, 60 Hz; undervoltage release is handle reset type.

M = magnetic only; TM = thermal-magnetic.

Classic Mining Service Breaker Frames Only

Breaker Type	Frame Size, Amperes	Number of Poles	Style Numbers
KAM ①	225	2	**2602D86G11**
	225	3	**2602D86G12**
KAMH ①	225	2	**2602D86G13**
	225	3	**2602D86G14**
HKAM ①	225	3	**1264C99G05**
LAM ②	400	2	**2602D99G05**
	400	3	**2602D99G06**
LAMH ②	400	2	**2602D99G07**
	400	3	**2602D99G08**
HLAM ②	400	3	**1264C99G02**
LAM3600F	600	3	**2603D48G07**
LAMH3600F	600	3	**2603D48G08**
HLAM3600F	600	3	**2603D48G09**

Breaker Type	Frame Size, Amperes	Number of Poles	Style Numbers
MAM ②	800	2	**2600D43G11**
	800	3	**2600D43G12**
MAMH ②	800	2	**2600D43G13**
	800	3	**2600D43G14**
HMAM ②	800	3	**1264C99G03**
NBM ②	1200	2	**2610D64G07**
	1200	3	**2610D64G08**
NBMH ②	1200	2	**2610D64G09**
	1200	3	**2610D64G10**
HNBM ②	1200	3	**2610D64G13**

Trip Units for Classic Mining Circuit Breakers

Breaker Type	Conductor Size	Magnetic Trip Range, Amperes	Maximum Continuous Amperes	Thermal-Magnetic Three-Pole ③ Style Numbers	Magnetic Only Three-Pole Style Numbers
HKAM	#6	150–400	180	—	**2609D99G22**
	#4–#3	300–700	225	**5685D48G40**	**2611D75G01**
	#4–#1	500–1000	225	**5685D48G34**	**2611D75G02**
HLAM	#4–#1	750–1500	400	**5685D48G97**	**2609D99G21**
	#2–#2/0	800–1600	400	**5685D48G28**	**2611D75G03**
HLAM600	#2–2/0	750–1500	600	**2609D99G20**	—
	2/0–500 kcmil	1500–3000	600	**2609D99G19**	—
HMAM	#2–#2/0	750–1500	600	—	—
	2/0–500 kcmil	1500–3000	600	**5685D48G22**	**2611D75G04** ④
	#1–3/0	1000–2000	800	—	—
	3/0–500 kcmil	2000–4000	800	**5685D48G16**	**2611D75G05**
HNBM	2/0–500 kcmil	1500–3000	1000	—	—
	4/0–500 kcmil	2500–5000	1000	**5685D48G10**	—
	3/0–500 kcmil	2000–4000	1200	—	—
	4/0–500 kcmil	2500–5000	1200	**5685D48G04**	**2611D75G07**

Notes

① Frame modified for left-hand mounting of UVR attachment.
② Frame modified for right-hand mounting of UVR attachment.
③ Three-pole trip units only are suitable for replacement in 1000 volt mining service circuit breakers.
④ 800 amperes.

Terminals For Classic Mining Service Breakers

Terminals are UL listed for wire type and range listed below.
When used with aluminum conductors, use joint compound.

Breaker Type	Terminal Type	Maximum Amperes	Package of 3 Line Terminals Style Number	Wire Range, Type
FBM, HFBM	Style pressure type terminals	100	**624B100G02**	#14–1/0 Al/Cu
	Optional Al/Cu pressure terminals	50	**624B100G10**	#14–#4 Al/Cu
		100	**624B100G17**	# 4–4/0 Al/Cu

Terminals For Mining Service Breakers

Breaker Type	Terminal Type	Maximum Amperes	Terminal Catalog Number	Wire Range, Type Number of Cables
KAM, HKAM	Standard pressure terminals (copper only)	225	**T225LA**	(1) #6–350 kcmil
	Optional Al/Cu pressure terminals	225	**TA225LA1**	(1) #6–350 kcmil Cu, or (1) #4–350 kcmil Al
LAM	Standard copper pressure terminals	225	**T225LA**	(1) #6–350 kcmil Cu
		400	**T401LA**	(1) #4–250 kcmil Cu plus (1) 3/0–600 kcmil Cu
	Optional Al/Cu pressure terminals	225	**TA225LA1**	(1) #6–350 kcmil Cu, or (1) #4–350 kcmil Al
		400	**TA400LA1**	(1) #4–250 kcmil Al/Cu, plus (1) 3/0–600 kcmil Al/Cu
		400	**TA401LA**	(1) 600–750 kcmil Al
LAM-600, LAMH-600, HLAM-600	Standard copper pressure terminals	600	**T600LA**	(2) 250–500 kcmil Cu
	Optional Al/Cu pressure terminals	600	**TA600LA**	(2) 250–500 kcmil Al/Cu
MAM, HMAM, MAMH	Standard copper pressure terminals	350	**T350MA**	(1) #1–600 kcmil Cu
		600	**T600MA1**	(2) 2/0–500 kcmil Cu
		800	**T800MA1**	(3) 3/0–300 kcmil Cu
	Optional Al/Cu pressure terminals	600	**TA700MA1**	(2) #1–500 kcmil Al/Cu
		800	**TA800MA2**	(3) 3/0–400 kcmil Al/Cu
		800	**TA801MA**	(2) 500–750 kcmil Al/Cu
NBM, HNBM, NBMH	Standard copper pressure terminals	1000	**T1000NB1**	(3) 3/0–500 kcmil Cu
		1200	**T1200NB1**	(4) 3/0–400 kcmil Cu
	Optional Al/Cu pressure terminals	1000	**TA1000NB1**	(3) 3/0–400 kcmil Al/Cu
		1200	**TA1200NB1**	(4) 4/0–500 kcmil Al/Cu
		1200	**TA1201NB1**	(3) 500–750 kcmil Al/Cu

Accessories

Classic Mining Circuit Breakers

Rear Connected Studs ①

For complete stud assembly, order a stud and tube based on thickness of customer's mounting panel. A short stud must be assembled adjacent to a long stud to maintain clearances required by Underwriters Laboratories.② Two studs required per pole. For List Prices, see Eaton's Price and Availability Digest.

Mounting Panel Thickness In Inches (mm)	Stud Length	Stud Style Numbers	Tube Length In Inches (mm)	Tube Style Numbers
KAM, HKAM Breakers				
0.75 (19.1)–1.00 (25.4)	Short	**656D565G01**	0.84 (21.3)	**456D983H05**
	Long	**656D565G02**	3.78 (96.0)	**456D983H08**
0.50 (12.7)–0.75 (19.1)	Short	**656D565G01**	1.09 (27.7)	**456D983H06**
	Long	**656D565G02**	4.03 (102.4)	**456D983H09**
0.25 (6.4)–0.50 (12.7)	Short	**656D565G01**	1.34 (34.0)	**456D983H07**
	Long	**656D565G02**	4.28 (108.7)	**456D983H10**

Rear Connected Studs For Insulated Panels Only: Two Per Pole

Stud Ampere Number	Diameter, In Inches (mm) and Thread	Extension Back of Breaker In Inches (mm)	Stud Style Numbers
LAM, HLAM Breakers			
225 ③	0.50 (12.7)–13	3.22 (81.8)	**1241 345**
	0.50 (12.7)–13	6.28 (159.5)	**1241 346**
225 ③④	0.50 (12.7)–13	4.97 (126.2)	**1241 392**
400 ③	0.75 (19.1)–16	5.47 (138.9)	**05B7383G22**
	0.75 (19.1)–16	7.97 (202.4)	**05B7383G23**
	0.75 (19.1)–16	10.47 (265.9)	**05B7383G24**
600	1.00 (25.4)–12	5.91 (150.1)	**314C960G16**
	1.00 (25.4)–12	8.41 (213.6)	**314C960G17**
	1.00 (25.4)–12	10.91 (277.1)	**314C960G18**
MAM, HMAM, MAMH Breakers			
225	0.50 (12.7)–13	3.66 (93.0)	**314C960G01**
400	0.75 (19.1)–16	5.91 (150.1)	**314C960G04**
	0.75 (19.1)–16	8.41 (213.6)	**314C960G05**
	0.75 (19.1)–16	10.91 (277.1)	**314C960G06**
600	1.00 (25.4)–12	5.91 (150.1)	**314C960G07**
	1.00 (25.4)–12	8.41 (213.6)	**314C960G08**
	1.00 (25.4)–12	10.91 (277.1)	**314C960G09**
800	1.13 (28.7)–12	4.91 (124.7)	**314C960G10**
	1.13 (28.7)–12	8.41 (213.6)	**314C960G11**
	1.13 (28.7)–12	10.91 (277.1)	**314C960G12**
NBM, HNBM, NBMH Breakers			
800	1.13 (28.7)–12	5.50 (139.7)	**623B222G01**
	1.13 (28.7)–12	8.00 (203.2)	**623B222G02**
	1.13 (28.7)–12	10.50 (266.7)	**623B222G03**
1200	1.25 (31.8)–12	5.50 (139.7)	**373B375G04**
	1.25 (31.8)–12	10.50 (266.7)	**373B375G03**

Line and Load Terminal Shields ⑤

Breaker Type	Description	Style Numbers
KAM	Line terminals	**1261C93G01**
	Load terminals	**1262C46G01**
LAM-400	Line terminals	**1261C95G01**
	Load terminals	**1262C48G01**
MAM	Line terminals	**1261C97G01**
	Load terminals	**1261C97G02**

Notes

① Not UL listed.
② 400 ampere LA studs of the same length have sufficient clearance; however, customer connections may make it necessary to use a short stud adjacent to a long stud.
③ 150, 300 and 400 ampere frames only.
④ This is a special stud that includes six contact nuts for use where bus contact nuts must be used.
⑤ For breakers used with terminals and cable connections. Sold in packages of 10.

Standard Handle Reset Undervoltage Release

For Classic breakers field mountable on special frames listed on **Page V4-T2-412**, or replacement on breakers originally equipped with this type UVR.

For undervoltage protection. A solenoid device mounts within breaker case. Coil must be energized before closing breaker. Trips breaker when voltage drops below 35 to 70% of coil rating. Picks up and seals in at 72 to 85% of coil rating. For line voltages up to 250 Vdc or 600 Vac. Externally mounted resistors are supplied for certain ratings. Standard leads extend 18.00 inches (457.2 mm) outside of breaker. Longer leads may be specified.

Breaker Type	Volts	Style Numbers
Right-Hand Mounting		
LAM, HLAM	120 Vac	**4995D12G11**
	120 Vac ①	**1228C76G03**
	240 Vac	**4995D12G13**
	480 Vac	**4995D12G14**
	125 Vdc	**4995D12G09**
MAM, HMAM, MAMH	120 Vac	**5672D69G11**
	120 Vac ①	—
	240 Vac	**5672D69G13**
	480 Vac	**5672D69G14**
NBM, HNBM, NBMH	120 Vac	**4995D11G11**
	120 Vac ①	**1229C35G03**
	240 Vac	**4995D11G13**
	480 Vac	**4995D11G14**
Left-Hand Mounting		
KAM, HKAM	120 Vac	**4995D10G01**
	120 Vac ①	**1228C76G03**
	240 Vac	**4995D10G03**
	480 Vac	**4995D10G04**

Shunt Trips

For tripping breaker from a remote point. A solenoid device mounts within breaker case. Breaker trips when coil is energized. A cutoff switch breaks the circuit to the momentary rated coil when breaker opens. Available for control voltages up to 250 Vdc or 600 Vac. Voltage and frequency must be specified. Standard leads extend 18.00 inches (457.2 mm) outside of breaker. Longer leads may be specified.

Breaker Type	Volts (50–60 Hz)	Style Numbers
Right-Hand Mounting		
KAM, HKAM	480 Vac	**2605D15G16**
	240 Vac	**2605D15G17**
	120 Vac	**2605D15G19**
LAM, HLAM	480 Vac	**2606D56G16**
	240 Vac	**2606D56G17**
	120 Vac	**2606D56G19**
	48 Vdc	**2606D56G07**
MAM, HMAM, MAMH	480 Vac	**2606D57G16**
	240 Vac	**2606D57G17**
	120 Vac	**2606D57G19**
NBM, HNBM, NBMH	480 Vac	**2606D58G16**
	240 Vac	**2606D58G17**
	120 Vac	**2606D58G19**
Left-Hand Mounting		
KAM, HKAM	480 Vac	**2605D15G02**
	240 Vac	**2605D15G03**
	120 Vac	**2605D15G05**
LAM, HLAM	480 Vac	**2606D56G02**
	240 Vac	**2606D56G03**
	120 Vac	**2606D56G05**
MAM, HMAM, MAMH	480 Vac	**2606D57G02**
	240 Vac	**2606D57G03**
	120 Vac	**2606D57G05**
NBM, HNBM, NBMH	480 Vac	**2606D58G02**
	240 Vac	**2606D58G03**
	120 Vac	**2606D58G05**

Notes

① Electrical reset UVR.

② Auto reset type.

Reference Information

E^2 Cross-Reference

Series C Mining	Superseded by E^2 Mining
1491D72G31	E2J3070T
1491D72G32	E2J3090T
1491D72G33	E2J3100T
1491D72G37	E2J3200T
6622C87G27	E2K3225AWU66
6622C87G28	E2K3225DWU66
6622C87G32	E2K3400GWU66
E2KM3100	E2KEM3100W
E2KM3100U66	E2KEM3100WU66
E2KM3125	E2KEM3125W
E2KM3125U66	E2KEM3125WU66
E2KM3150	E2KEM3150W
E2KM3150MU66	E2KEM3150WU66
E2KM3150TM	E2KEM3150MW
E2KM3150U66	E2KEM3150MWU66
E2KM3200	E2KEM3200W
E2KM3200U66	E2KEM3200WU66
E2KM3225	E2KEM3225W
E2KM3225F	E2KM3400F
E2KM3225FUV	E2KM3400F
E2KM3225MU66	E2KEM3225MWU66
E2KM3225TM	E2KEM3225TM
E2KM3225U66	E2KEM3225WU66
E2LM3300U66	E2LEM3300WU66
E2LM3350U66	E2LEM3350WU66
E2LM34002U66	E2LEM34002WU66
E2LM3400F	E2LM3600F
E2LM3400FUV	E2LM3600F
E2LM3400M2U66	E2LEM3400M2WU66
E2LM3400MU66	E2LEM3400MWU66
E2LM3400U66	E2LEM3400WU66
FDBM3015	E2F3015
FDBM3015WU62	E2F3015WU62
FDBM3020	E2F3020
FDBM3025	E2F3025
FDBM3025U62	E2F3025U62
FDBM3030	E2F3030
FDBM3030U62	E2F3030WU62
FDBM3030WU62	E2F3030WU62
FDBM3035	E2F3035

Series C Mining	Superseded by E^2 Mining
FDBM3040	E2F3040
FDBM3045	E2F3045
FDBM3050	E2F3050
FDBM3050U62	E2F3050U62
FDBM3050WU62	E2F3050WU62
FDBM3060	E2F3060
FDBM3070	E2F3070
FDBM3070WU62	E2F3070WU62
FDBM3080	E2F3080
FDBM3090	E2F3090
FDBM3100	E2F3100
FDBM3100LM04U62	E2F3100M04U62
FDBM3125	E2F3125
FDBM3150	E2F3150
FDBM3150L	E2F3150L
FDM3015	E2F3015
FDM3015L	E2F3015L
FDM3015LU62	E2F3015LU62
FDM3020	E2F3020
FDM3020LU62	E2F3020LU62
FDM3025	E2F3025
FDM3025L	E2F3025L
FDM3025LS22	E2F3025LS22
FDM3025LU62	E2F3025LU62
FDM3030	E2F3030
FDM3030LS22	E2F3030LS22
FDM3040	E2F3040
FDM3040L	E2F3040L
FDM3040LU62	E2F3040LU62
FDM3050	E2F3050
FDM3050LU62	E2F3050LU62
FDM3050U62	E2F3050U62
FDM3060	E2F3060
FDM3060LU62	E2F3060LU62
FDM3070	E2F3070
FDM3070A02U62	E2F3070A02U62
FDM3080	E2F3080
FDM3090	E2F3090
FDM3100	E2F3100
FDM3100LS22	E2F3100LS22

E² Cross-Reference, continued

Series C Mining	Superseded by E² Mining
FDM3100LU62	E2FLU62
FDM3125	E2F3125
FDM3125LU62	E2F3125LU62
FDM3150	E2F3150
HFDM003AM	E2F003AM
HFDM003AMLU62	E2F003AMLU62
HFDM007CM	E2F007CM
HFDM007CMU62	E2F007CMU62
HFDM015EM	E2F015EM
HFDM015EMA02	E2F015EMA02
HFDM015EMLU62	E2F015EMLU62
HFDM015EMU62	E2F015EMU62
HFDM030HM	E2F030HM
HFDM030HMLU62	E2F030HMLU62
HFDM030HMU62	E2F030HMU62
HFDM050KM	E2F050KM
HFDM050KML	E2F050KML
HFDM050KMLU62	E2F050KMLU62
HFDM050KMU62	E2F050KMU62
HFDM070MM	E2F070MM
HFDM070MMU62	E2F070MMU62
HFDM1001M	E2F1001M
HFDM1001MS22	E2F1001MS22
HFDM100LM	E2F100LM
HFDM100LMA02	E2F100LMA02
HFDM100LMU62	E2F100LMU62
HFDM 100RM	E2F100RM
HFDM100RML	E2F100RML
HFDM100RMS22	E2F100RMS22
HFDM100RMU62	E2F100RMU62
HFDM150TM	E2F150TM
HFDM150TML	E2F150TML
HFDM150TMU62	E2F150TMU62
HFDM150UM	E2F150UM
JCDA2D1S30	E2JM250MDA2D1S30
JCMA2D1S30	E2JM250MFA2D1S30
JDCM3070W	E2JM3070W
JDCM3090W	E2JM3090W
JDCM3100W	E2JM3100W
JDCM3125W	E2JM3125W

Series C Mining	Superseded by E² Mining
JDCM3150W	E2JM3150W
JDCM3175W	E2JM3175W
JDCM3200W	E2JM3200W
JDCM3225A5W	E2JM3225AW
JDCM3225D5W	E2JM3225DW
JDCM3225W	E2JM3225W
JDCM3250A5MW	E2JM3250MAW
JDCM3250A5MWU18	E2JM3250MAWU18
JDCM3250A5W	E2JM3250AW
JDCM3250C5MW	E2JM3250MCW
JDCM3250D5MW	E2JM3250MDW
JDCM3250D5MWA06	E2JM3250MDWA06
JDCM3250D5W	E2JM3250DW
JDCM3250D5WS10	E2JM3250DWS10
JDCM3250F	E2JM3250F
JDCM3250F5MD01	E2JM3250MFD01
JDCM3250F5MW	E2JM3250MFW
JDCM3250G5MW	E2JM3250MGW
JDCM3250G5WA02D01	E2JM3250MGA02D01
JDCM3250J5MW	E2JM3250MJW
JDCM3250J5MWA02	E2JM3250MJA02
JDCM3250J5WA02D01	E2JM3250MJA02D01
JDCM3250J5WD01	E2JM3250MJD01
JDCM3250K5MW	E2JM3250MKW
JDCM3250L5MW	E2JM3250MLW
JDCM3250MW	E2JM3250MW
JDCM3250W	E2JM3250W
JDCMAA2D1	E2JM3250MM02D01
JDCMDD1S30	E2JM3250MDS30D01
JDCMFD01	E2JM3250MFD01
JDCMGA02D1	E2JM3250MGA02D01
JDCMJA2D1	E2JM3250MJA02D01
JDCMJD01	E2JM3250MJD01
JDM2250F	E2JM3250F
JDM3070W	E2J3070W
JDM3090W	E2J3090W
JDM3100W	E2J3100W
JDM3125W	E2J3125W
JDM3150W	E2J3150W
JDM3150WU18	E2J3150WU18

E² Cross-Reference, continued

Series C Mining	Superseded by E² Mining
JDM3175W	E2J3175W
JDM3200W	E2J3200W
JDM3200WA06	E2J3200WA06
JDM3225A5W	E2J3225AW
JDM3225D5W	E2J3225DW
JDM3225W	E2J3225W
JDM3250A5MW	E2J3250MAW
JDM3250A5W	E2J3250AW
JDM3250C5MW	E2J3250CW
JDM3250D5MW	E2J3250MDW
JDM3250D5W	E2J3250DW
JDM3250F	E2J3250F
JDM3250F5MW	E2J3250MFW
JDM3250G5MW	E2J3250MGW
JDM3250J5MW	E2J3250MJW
JDM3250K5MW	E2J3250MKW
JDM3250L5MW	E2J3250MLW
JDM3250MW	E2J3250MW
JDM3250W	E2J3250W
JDM3250WS10	E2J3250WS10
JM2225T1125-2250	E2J3225T
JM3070T	E2J3070T
JM3090T	E2J3090T
JM3100T	E2J3100T
JM3125T	E2J3125T
JM3150T	E2J3150T
JM3175T	E2J3175T
JM3200T	E2J3200T
JM3225T	E2J3225T
JM3225TA5	E2J3225TA
JM3225TD5	E2J3225TD
JM3250T	E2J3250T
JM3250TA5	E2J3250TA
JM3250TA5M_350-700	E2J3250TMA
JM3250TC5M	E2J3250TMC
JM3250TD5_500-1000	E2J3250TMD
JM3250TF5M_625-1250	E2J3250TMF
JM3250TG5M_750-1500	E2J3250TMG
JM3250TJ5M_875-1750	E2J3250TMJ
JM3250TK5M_1000-2000	E2J3250TMK

Series C Mining	Superseded by E² Mining
JM3250TL5M_1125-2250	E2J3250TML
JM3250TM	E2J3250TM
KDCM3100W	E2KM3100W
KDCM3125W	E2KM3125W
KDCM3150W	E2KM3150W
KDCM3175W	E2KM3175W
KDCM3200W	E2KM3200W
KDCM3225A5MW	E2KM3200MAW
KDCM3225D5MW	E2KM3200MDW
KDCM3225W	E2KM3225W
KDCM3250W	E2KM3250W
KDCM3250WU18	E2KM3250WU18
KDCM3300W	E2KM3300W
KDCM3350W	E2KM3350W
KDCM3400D5MA02D09H04	E2KM3400MDA02D09H04
KDCM3400D5MW	E2KM3400MDW
KDCM3400D5MWA02D07	E2KM3400MDA02D07
KDCM3400D5W	E2KM3400DW
KDCM3400D5WD09	E2KM3400DD09
KDCM3400F	E2KM3400F
KDCM3400F5MW	E2KM3400MFW
KDCM3400FD09G04	E2KM3400MFD09G04
KDCM3400G5MW	E2KM3400MGD09G05
KDCM3400G5MWD09H04	E2KM3400MGD09H04
KDCM3400G5W	E2KM3400MGW
KDCM3400G5WD07	E2KM3400MGD07
KDCM3400J5MA02D09	E2KM3400MJA02D09
KDCM3400J5MA2D9G4S30	E2KM3400MJA2D9G4S30
KDCM3400J5MD09	E2KM3400MJD09
KDCM3400J5MD09H04S30	E2KM3400MJD09H04S30
KDCM3400J5MW	E2KM3400MJW
KDCM3400J5MWA02D07	E2KM3400MJA02D07
KDCM3400J5MWA06	E2KM3400MJWA06
KDCM3400J5MWD07S30	E2KM3400MJD07S30
KDCM3400J5WD07	E2KM3400MJD07
KDCM3400K5MW	E2KM3400MKW
KDCM3400K5MWS10	E2KM3400MKWS10
KDCM3400K5MWU18	E2KM3400MKWU18
KDCM3400L5MW	E2KM3400MLW
KDCM3400L5MWD09H04	E2KM3400MLD09H04

E² Cross-Reference, continued

Series C Mining	Superseded by E² Mining
KDCM3400L5MWS10	E2KM3400MLWS10
KDCM3400L5WD07	E2KM3400MLD07
KDCM3400MW	E2KM3400MW
KDCM3400N5MW	E2KM3400MNW
KDCM3400N5MWA06	E2KM3400MNWA06
KDCM3400N5WA02D07	E2KM3400MNA02D07
KDCM3400R5MW	E2KM3400MRW
KDCM3400W	E2KM3400W
KDCM3400W5MW	E2KM3400MWW
KDCMDMD07	E2KM3400MDD07
KDCMNA2D7	E2KM3400MNA02D07
KDM2400F	E2K2400F
KDM2400G5MS50	E2K2400MGWS50
KDM2400G5MW	E2K2400MGW
KDM2400W5MW	E2K2400MWW
KDM2400W5MWA06D07S10	E2K2400MWA06D07S10
KDM2400W5MWA06D10S10	E2K2400MWA06D10S10
KDM2400W5MWD07	E2K2400MWD07
KDM2400W5MWD07S10	E2K2400MWD07S10
KDM2400W5MWD10	E2K2400MWD10
KDM2400W5MWD10S10	E2K2400MWD10S10
KDM2400W5MWS10	E2K2400MWWS10
KDM3100W	E2K3100W
KDM3125W	E2K3125W
KDM3150W	E2K3150W
KDM3150WA06	E2K3150WA06
KDM3175W	E2K3175W
KDM3200W	E2K3200W
KDM3225A5W	E2K3225AW
KDM3225D5A13D09U18	E2K3225DA13D09U18
KDM3225D5MW	E2K3400MDW
KDM3225D5W	E2K3225DW
KDM3225F	E2K3400F
KDM3225W	E2K3225W
KDM3225WK37	E2KE3225W
KDM3225WK37U18	E2KE3225WU18
KDM3225WK38	E2KE3225MW
KDM3250W	E2K3250W
KDM3300W	E2K3300W
KDM3300WA06U18	E2K3300WA06U18

Series C Mining	Superseded by E² Mining
KDM3300WS10	E2K3300WS10
KDM3350W	E2K3350W
KDM3400D5MW	E2K3400MDW
KDM3400D5W	E2K3400DW
KDM3400D5WU18	E2K3400DWU18
KDM3400F	E2K3400F
KDM3400F5MW	E2K3400MFW
KDM3400FK37A06D09D18	E2KE3400A06D09D18
KDM3400G5A06D09U18	E2K3400GA06D09U18
KDM3400G5A13D09U18	E2K3400GA13D09U18
KDM3400G5MW	E2K3400MGW
KDM3400G5W	E2K3400GW
KDM3400G5WA06	E2K3400GWS10
KDM3400G5WS10	E2K3400GWS10
KDM3400G5WU18	E2K3400GWU18
KDM3400J5MW	E2K3400MJW
KDM3400K5MS54	E2K3400MKWS54
KDM3400K5MW	E2K3400MKW
KDM3400L5MW	E2K3400MLW
KDM3400MW	E2K3400MW
KDM3400MWA06U18	E2K3400MWA06U18
KDM3400N5MW	E2K3400MNW
KDM3400R5MW	E2K3400MRW
KDM3400W	E2K3400W
KDM3400W5MW	E2K3400MWW
KEM3100T	KEM3100T
KEM3125T	KEM3125T
KEM3150T	KEM3150T
KEM3150TM	KEM3150TM
KEM3200T	KEM3200T
KEM3225T	KEM3225T
KEM3225T2	KEM3225T2
KEM3225TM	KEM3225TM
KEM3225TM2	KEM3225TM2
KM2225TA5	E2K2225TA
KM2225TA5M	E2K2400TMA
KM2225TD5	E2K2225TD
KM2225TD5M	E2K2400TMD
KM2400TD5	E2K2400TD
KM2400TD5M	E2K2400TMD

E^2 Cross-Reference, continued

Series C Mining	Superseded by E^2 Mining
KM2400TG5M	E2K2400TMG
KM2400TN5M	E2K2400TMN
KM2400TW5M	E2K2400TMW
KM3100T	E2K3100T
KM3125T	E2K3125T
KM3150T	E2K3150T
KM3175T	E2K3175T
KM3200T	E2K3200T
KM3225T	E2K3225T
KM3225TA5	E2K3225TA
KM3225TA5M	E2K3400TMA
KM3225TD5	E2K3225TD
KM3225TD5M	E2K3400TMD
KM3250T	E2K3250T
KM3300T	E2K3300T
KM3350T	E2K3350T
KM3400T	E2K3400T
KM3400TD5	E2K3400TD
KM3400TF5M	E2K3400TMF
KM3400TG5M	E2K3400TMG
KM3400TJ5M	E2K3400TMJ
KM3400TK5M	E2K3400TMK
KM3400TL5M	E2K3400TML
KM3400TM	E2K3400TM
KM3400TN5M	E2K3400TMN
KM3400TR5M	E2K3400TMR
KM3400TW5M	E2K3400TMW
LDCM3600EMA05W	E2LEM3600MA05W
LDCM3600F	E2LM3600F
LDM3600F	E2L3600F

Series C Mining	Superseded by E^2 Mining
LEM3300T	LEM3300T
LEM3350T	LEM3350T
LEM3400T	LEM3400T
LEM3400T2	LEM3400T2
LEM3400TM	LEM3400TM
LEM3400TM2	LEM3400TM2
LEM3600T	LEM3600T
LEM3600TM	LEM3600TM
LM3600TL6M	E2L3600TML
LM3600TN6M	E2L3600TMN
LM3600TP6M	E2L3600TMP
LM3600TR6M	E2L3600TMR
LM3600TS6M	E2L3600TM
LM3600TX6M	E2L3600TMX
UVE3LP08K	UVE3LP08K
UVE4LP08K	UVE4LP08K

Additional Information on Mining Breakers

Source	Description
TD01217001E	E^2 Mining Circuit Breaker Dimensional Data
BR01217001E	E^2 Mining Circuit Breaker Brochure
TC01217001E	E^2 Mining Circuit Breaker Time Current Curves
www.eaton.com/mining	Mining and Metals

GFR Relay

Contents

Description	*Page*
Engine Generator Circuit Breakers	**V4-T2-341**
Direct Current Circuit Breakers	**V4-T2-347**
PVGard Solar Circuit Breakers—600 Vdc Per-Pole and 1000 Vdc Poles-in-Series	**V4-T2-361**
E^2 Mining Service Circuit Breakers	**V4-T2-374**
Classic Mining Breakers	**V4-T2-403**
E2VAC Mining Vacuum Circuit Breaker	**V4-T2-400**
Add-On Ground Fault Protection—Type GFR	
Product Selection	**V4-T2-418**
Accessories	**V4-T2-419**
Technical Data and Specifications	**V4-T2-419**

Add-On Ground Fault Protection—Type GFR

Product Description

A Type GFR ground fault protection system, when properly installed on a grounded electrical system, will sense phase-to-ground fault currents. When the level of fault current is in excess of the pre-selected current pickup and time delay settings, the GFR relay will initiate a trip action of a disconnect device, which will open the faulted circuit and clear the fault.

The GFR devices are UL Class I devices designed to protect electrical equipment against extensive damage from arcing ground faults.

A basic Type GFR ground fault protection system consists of a ground fault relay, a ground fault current sensor and a disconnect device equipped with a shunt trip device. This disconnect device can be a molded case circuit breaker, a power circuit breaker, a bolted pressure switch or other fusible disconnect device, suitable for application with UL Class I ground fault sensing and relaying equipment.

Note: Suitable for either surface or semi-flush mounting.

Standards and Certifications

Eaton's GFR ground fault relays, current sensors, test panels and accessory devices are UL listed by Underwriters Laboratories in accordance with their standard for ground fault sensing and relaying equipment, UL 1053, under File E48381.

Note: Relays are also listed with CSA under their file number 43357.

Listed

Product Selection

Each installation requires:

- One relay unit (select trip ampere as required)
- One current sensor (select configuration required)
- One circuit breaker or disconnect device with shunt trip, or a shunt trip attachment for mounting in existing breaker
- Test panel (optional)

GFR Relay

GFR Relay

GFR Relay Types	Ground Fault Pickup Amperes 1–12 Catalog Number ①	5–60 Catalog Number ①	100–1200 Catalog Number ①
For 120 Volt 50/60 Hz Control			
Electrical reset with zone interlocking	**GFR12EI**	**GFR60EI**	**GFR1200EI**
Electrical reset without zone interlocking	**GFR12E**	**GFR60E**	**GFR1200E**
Mechanical reset with zone interlocking	**GFR12MI**	**GFR60MI**	**GFR1200MI**
Mechanical reset without zone interlocking	**GFR12M**	**GFR60M**	**GFR1200M**
For 120 Vdc Control			
Electrical reset with zone interlocking	—	—	**GFR1200EID**
Electrical reset without zone interlocking	—	—	**GFR1200ED**
Mechanical reset with zone interlocking	—	—	**GFR1200MID**
Mechanical reset without zone interlocking	—	—	**GFR1200MD**

Typical Current Sensor

Current Sensor

Window Size in Inches (mm)	Catalog Number
Used with Relays Rated 1–12 Amperes	
5.50 (139.7) I.D.	**1283C45G01**
Used with Relays Rated 5–60 Amperes	
2.50 (63.5) I.D.	**179C768G01**
5.50 (139.7) I.D.	**1256C13G01**
7.81 x 11.00 (198.4 x 279.4) Rect. ②	**1257C88G04**
3.31 x 24.94 (84.1 x 760.5) Rect. ②	**1257C92G03**
Used with Relays Rated 100–1200 Amperes	
2.50 (63.5) I.D.	**179C768G02**
5.50 (139.7) I.D.	**1256C13G02**
8.25 (209.6). I.D.	**179C767G02**
7.81 x 11.00 (198.4 x 279.4) Rect. ②	**1257C88G03**
9.94 x 16.94 (252.5 x 430.3) Rect. ②	**1257C90G02**
9.94 x 23.94 (252.5 x 608.1) Rect. ②	**1257C91G02**
15.94 x 19.94 (404.9 x 506.4) Rect. ②	**1257C89G02**
3.31 x 24.94 (84.1 x 633.5) Rect. ②	**1257C92G04**
6.75 x 29.64 (171.5 x 752.9) Rect. ②	**1255C39G03**

Notes

① Suitable for either surface or semi-flush mounting.
② One end removable for installation.

Accessories

Options

Additional optional equipment can be added to the protection system to meet the requirements of the specifying engineer, including:

- Ground fault test panel
- Ground fault warning indicator relay
- Ground fault indicating ammeter

GFR relays are available with zone selective interlocking circuitry to interlock several relays within the same system. This allows the relay which detects a ground fault to instantly clear the fault by tripping the disconnect device. The relay simultaneously sends a signal to relay units "upstream" from the fault to time delay or to block their operation completely. Current sensors in various designs provide a range of "window" sizes to accommodate standard bus and cable arrangements.

Shunt trip attachments may be ordered for field mounting in Eaton's molded case circuit breakers, or may be ordered factory installed in the breaker.

Test Panel (120 Vac)

Used to test the ground fault system, to give an indication the relay has tripped the breaker, and to reset the relay after tripping. These functions may be separately mounted pilot devices.

Note: When a mechanically reset relay is used with a test panel, both the relay and test panel must be reset following either a simulated ground fault test or actual ground fault. Not UL listed.

Optional Test Panel

Control	Test	Catalog Number
120 Volt 50/60 Hz	120 Volt 50/60 Hz	**GFRTP**

Ground Fault Warning Indicator

This is an accessory item for use with GFR relays with interlocking circuitry. At approximately 30–50% of the relay pickup setting, the indicator switches separate 120 Vac control power to a lamp or relay, (not included) to give an indication of a ground fault. The indicator is rated 110/120 Vac 50/60 Hz for a maximum indicator load of 0.5 amperes.

Ground Fault Warning Indicator

Description	Catalog Number
Manual reset	**1234C67G01**
Self-resetting	**1234C67G02**

Indicating Ammeter

The optional indicating ammeter connects to the sensor terminals through a momentary contact pushbutton, and will indicate (in amperes) any ground fault current flowing through the sensor. Kit includes the ammeter and pushbutton.

Note: Not UL listed.

Ammeter Kit

GFR System Used with	Kit Catalog Number
1–12 ampere	**752B820G01**
5–60 ampere	**752B820G02**
100–1200 ampere	**752B820G03**

Shunt Trip Attachments

Use 120 Vac shunt trips.

Faceplate

Recommended when these relays are semi-flush mounted, to close the door cutout opening.

Face Plate

Description	Catalog Number
Faceplate	**752B410G01**

Technical Data and Specifications

Sensor

- 600 volt, 50/60 Hz maximum system voltage

Electrical Ratings

GFR Relay

- Ground fault detection ranges:
  - 1 to 12, 5 to 60 or 100 to 1200 amperes
- Output contacts:
  - 240 volt, 50/60 Hz: 3.0 amperes
  - 120 volt, 50/60 Hz: 6.0 amperes
  - 28 Vdc: 3.0 amperes
  - 125 Vdc: 0.5 amperes
- Control power requirements:
  - 120 volt, 50/60 Hz or 125 Vdc (optional)

Handle Mechanisms

Contents

Description	*Page*
Handle Mechanisms—Series G	
High-Performance Rotary Handle Mechanisms	**V4-T2-421**
Universal Rotary	**V4-T2-426**
Direct (Close-Coupled) Handle Mechanisms	**V4-T2-428**
Flex Shaft	**V4-T2-429**
Handle Mechanisms—Series C	
High-Performance Rotary Handle Mechanisms	**V4-T2-434**
Series C Rotary	**V4-T2-438**
Universal Rotary	**V4-T2-440**
Direct (Close-Coupled) Handle Mechanisms	**V4-T2-442**
Flex Shaft	**V4-T2-444**
Handle Extension	**V4-T2-447**

Handle Mechanisms—Series G

Product Overview

Handle mechanisms are used to operate molded case circuit breakers, molded case switches and motor circuit protectors. They are available in three basic configurations—Flange Mounted, Through-the-Door and Direct (Close-Coupled)—providing safe, dependable operation and ease of installation.

Through-the-Door

- High-Performance Rotary
- Universal Rotary

Direct (Close-Coupled)

- Universal Direct

Flange Mounted

- Flex Shaft™

Handle mechanisms are used on enclosed circuit breakers, control panels and motor control centers in many different applications. Eaton has a handle mechanism for virtually any need.

Handle Mechanisms

Description	*Page*
Handle Mechanisms—Series G	**V4-T2-420**
High-Performance Rotary Handle Mechanisms	
Product Selection	**V4-T2-422**
Dimensions	**V4-T2-425**
Universal Rotary	**V4-T2-426**
Direct (Close-Coupled) Handle Mechanisms	**V4-T2-428**
Flex Shaft	**V4-T2-429**
Handle Mechanisms—Series C	
High-Performance Rotary Handle Mechanisms	**V4-T2-434**
Series C Rotary	**V4-T2-438**
Universal Rotary	**V4-T2-440**
Direct (Close-Coupled) Handle Mechanisms	**V4-T2-442**
Flex Shaft	**V4-T2-444**
Handle Extension	**V4-T2-447**

High-Performance Rotary Handle Mechanisms

Product Description

The high-performance rotary handle mechanism uses a simple, yet robust design to make installation and operation easy. The external handle's key functional components are all metallic, ensuring reliability. The metal-on-metal interface between the handle and shaft prevents contaminant buildup that could impede operation, while UV and chemical agent resistant materials protect the handle from heat and fading in direct sunlight, as well as chemicals that may be introduced in harsh environments.

In addition to its robust design features, the handle mechanism has stand-off support that allows for easy operation with a gloved hand. With a shallow profile, the handle can easily be used in applications where an internal or double door is required.

The high-performance external handle can accept padlocks or multi-hasp locks. The door is interlocked when padlocked and cannot be bypassed.

Features

- NEMA Type 1/3R/12 (IP54) and NEMA Type 4/4X (IP65) ratings
- Black/Blue or Red/Yellow external handle colors
- Three shaft lengths—6, 12 and 24 inches, which can be cut to size to match enclosure depth
- Conveniently packaged as kit containing handle, shaft and mechanism
- Replacement parts are available separately
- Metallic functional components ensure reliability
- Metal-on-metal interface between handle and shaft
- UV and chemical agent-resistant materials protect the handle
- Shallow profile
- Compatible with both Series C and Series G molded case circuit breakers and molded case switch platforms
- Same handle can be used on multiple frame sizes, reducing the number of parts needed
- Red and yellow handles to designate emergency disconnecting means
- All handle mechanisms can accept padlocks or multi-hasp locks for added flexibility
- Fast, easy installation (see video on website for step-by-step instructions)

Standards and Certifications

The mechanisms for EG, JG and LG breakers have an internal handle that can be operated independent of door position, and locked-out to meet one of the key NFPA requirements (NFPA® 79) and UL 508A disconnect requirements.

- NEMA 1/3R/12, IP54
- NEMA 4/4X, IP65

Listed

Product Selection

Handle Mechanisms for Series G Frames

Kits Only (Kit Includes Shaft, Mechanism and Handle)—EG-, JG- and LG-Frame

	Description	Rating Type NEMA	Rating Type IP	EG-Frame Catalog Number	JG-Frame Catalog Number	LG-Frame Catalog Number
S01 Blue Handle	S01 blue handle, 6-inch shaft	1/3R/12	54	**EGHMVD06B0 / 68C6040G25**	**JGHMVD06B0 / 68C6041G13**	—
		4/4X	65	**EGHMVD06BX0 / 68C6040G28**	**JGHMVD06BX0 / 68C6041G16**	—
	S01 blue handle, 12-inch shaft	1/3R/12	54	**EGHMVD12B0 / 68C6040G26**	**JGHMVD12B0 / 68C6041G14**	—
		4/4X	65	**EGHMVD12BX0 / 68C6040G29**	**JGHMVD12BX0 / 68C6041G17**	—
	S01 blue handle, 24-inch shaft ①	1/3R/12	54	**EGHMVD24B0 / 68C6040G27**	**JGHMVD24B0 / 68C6041G15**	—
		4/4X	65	**EGHMVD24BX0 / 68C6040G30**	**JGHMVD24BX0 / 68C6041G18**	—
S01 Red Handle	S01 red handle, 6-inch shaft	1/3R/12	54	**EGHMVD06R0 / 68C6040G31**	**JGHMVD06R0 / 68C6041G19**	—
		4/4X	65	**EGHMVD06RX0 / 68C6040G34**	**JGHMVD06RX0 / 68C6041G22**	—
	S01 red handle, 12-inch shaft	1/3R/12	54	**EGHMVD12R0 / 68C6040G32**	**JGHMVD12R0 / 68C6041G20**	—
		4/4X	65	**EGHMVD12RX0 / 68C6040G35**	**JGHMVD12RX0 / 68C6041G23**	—
	S01 red handle, 24-inch shaft ①	1/3R/12	54	**EGHMVD24R0 / 68C6040G33**	**JGHMVD24R0 / 68C6041G21**	—
		4/4X	65	**EGHMVD24RX0 / 68C6040G36**	**JGHMVD24RX0 / 68C6041G24**	—
S2 Blue Handle	S2 blue handle, 6-inch shaft	1/3R/12	54	**EGHMVD06B / 68C6040G13**	**JGHMVD06B / 68C6041G01**	**LGHMVD06B / 68C6042G01**
		4/4X	65	**EGHMVD06BX / 68C6040G16**	**JGHMVD06BX / 68C6041G04**	**LGHMVD06BX / 68C6042G04**
	S2 blue handle, 12-inch shaft	1/3R/12	54	**EGHMVD12B / 68C6040G14**	**JGHMVD12B / 68C6041G02**	**LGHMVD12B / 68C6042G02**
		4/4X	65	**EGHMVD12BX / 68C6040G17**	**JGHMVD12BX / 68C6041G05**	**LGHMVD12BX / 68C6042G05**
	S2 blue handle, 24-inch shaft ①	1/3R/12	54	**EGHMVD24B / 68C6040G15**	**JGHMVD24B / 68C6041G03**	**LGHMVD24B / 68C6042G03**
		4/4X	65	**EGHMVD24BX / 68C6040G18**	**JGHMVD24BX / 68C6041G06**	**LGHMVD24BX / 68C6042G06**
S2 Red Handle	S2 red handle, 6-inch shaft	1/3R/12	54	**EGHMVD06R / 68C6040G19**	**JGHMVD06R / 68C6041G07**	**LGHMVD06R / 68C6042G07**
		4/4X	65	**EGHMVD06RX / 68C6040G22**	**JGHMVD06RX / 68C6041G10**	**LGHMVD06RX / 68C6042G10**
	S2 red handle, 12-inch shaft	1/3R/12	54	**EGHMVD12R / 68C6040G20**	**JGHMVD12R / 68C6041G08**	**LGHMVD12R / 68C6042G08**
		4/4X	65	**EGHMVD12RX / 68C6040G23**	**JGHMVD12RX / 68C6041G11**	**LGHMVD12RX / 68C6042G11**
	S2 red handle, 24-inch shaft ①	1/3R/12	54	**EGHMVD24R / 68C6040G21**	**JGHMVD24R / 68C6041G09**	**LGHMVD24R / 68C6042G09**
		4/4X	65	**EGHMVD24RX / 68C6040G24**	**JGHMVD24RX / 68C6041G12**	**LGHMVD24RX / 68C6042G12**

Notes

① 24-inch handle comes with support bracket.

Shaft guide (68C6048G49) is optional and can be used with any high-performance handle listed above for greater alignment tolerance.

Handle Mechanisms for Series G Frames

Kits Only (Kit Includes Shaft, Mechanism and Handle)—NG- and RG-Frame

	Description	Rating Type NEMA	IP	NG-Frame Catalog Number	RG-Frame Catalog Number
S3 Blue Handle	S3 blue handle, 10-inch shaft	1/3R/12	54	**NGHMVD08B / 68C6043G01**	—
		4/4X	65	**NGHMVD08BX / 68C6043G03**	—
S3 Red Handle	S3 red handle, 10-inch shaft	1/3R/12	54	**NGHMVD08R / 68C6043G02**	—
		4/4X	65	**NGHMVD08RX / 68C6043G04**	—
S4 Blue Handle	S4 blue handle, 10-inch shaft	1/3R/12	54	**NGHMVD08BT / 68C6043G05**	**RGHMVD08B / 68C6044G01**
		4/4X	65	**NGHMVD08BTX / 68C6043G07**	**RGHMVD08BX / 68C6044G03**
S4 Red Handle	S4 red handle, 10-inch shaft	1/3R/12	54	**NGHMVD08RT / 68C6043G06**	**RGHMVD08R / 68C6044G02**
		4/4X	65	**NGHMVD08RTX / 68C6043G08**	**RGHMVD08RX / 68C6044G04**

Note

Shaft guide (68C6048G49) is optional and can be used with any high-performance handle listed above for greater alignment tolerance.

Separate Components for Series G Frames

Series G Components—Shafts and Mechanisms

Frame	Shaft Width	Shaft Length 6-Inch	10-Inch	12-Inch	24-Inch ①	Mechanism Only
EG	8 mm	**66A6010G95**	—	**66A6010G96**	**66A6010G97**	**1498D66G17**
JG	8 mm	**66A6010G95**	—	**66A6010G96**	**66A6010G98**	**69D6025G17**
LG	8 mm	**66A6010G95**	—	**66A6010G96**	**66A6010G99**	**69D6051G30**
NG	12 mm	—	**66A6013H01**	—	—	**69D9101G30**
RG	12 mm	—	**66A6013H01**	—	—	**69D9101G31**

Series G Components—Handles Only

Frame	Rating Type NEMA	IP	Handles Only S01 Blue/Black	S01 Red/Yellow	S2 Blue/Black	S2 Red/Yellow	S3 Blue/Black	S3 Red/Yellow	S4 Blue/Black	S4 Red/Yellow
EG	1/3R/12	54	**68C6048G41**	**68C6048G42**	**68C6048G01**	**68C6048G02**	—	—	—	—
	4/4X	65	**68C6048G43**	**68C6048G44**	**68C6048G03**	**68C6048G04**	—	—	—	—
JG	1/3R/12	54	**68C6048G41**	**68C6048G42**	**68C6048G01**	**68C6048G02**	—	—	—	—
	4/4X	65	**68C6048G43**	**68C6048G44**	**68C6048G03**	**68C6048G04**	—	—	—	—
LG	1/3R/12	54	—	—	**68C6048G01**	**68C6048G02**	**68C6048G05**	**68C6048G06**	—	—
	4/4X	65	—	—	**68C6048G03**	**68C6048G04**	**68C6048G07**	**68C6048G08**	—	—
NG	1/3R/12	54	—	—	—	—	**68C6048G05**	**68C6048G06**	**68C6048G09**	**68C6048G10**
	4/4X	65	—	—	—	—	**68C6048G07**	**68C6048G08**	**68C6048G11**	**68C6048G12**
RG	1/3R/12	54	—	—	—	—	—	—	**68C6048G09**	**68C6048G10**
	4/4X	65	—	—	—	—	—	—	**68C6048G11**	**68C6048G12**

Series G Components—Optional Caps

As an alternative to blue or red, a black, replaceable cap is available.

			Catalog Number
S01	66A6032H01	Black handle cap	**HPHC0DGX**
S2	66A6032H02	Black handle cap	**HPHC2DGX**
S3	66A6032H03	Black handle cap	**HPHC3DGX**

Series G Replacement Hardware

This kit provides replacement parts for Series G high performance handle only.

	Catalog Number
High-performance handle replacement parts kit	**66A6029G01**

Notes

① 24-inch handle comes with support bracket.

Shaft guide (68C6048G49) is optional and can be used with any high-performance handle listed above for greater alignment tolerance.

Dimensions

Approximate Dimensions in mm (Inches)

High-Performance Rotary Handle Mechanisms

Handle Type	Front Operation Direction of Operation	Door Drilling
Type S01		
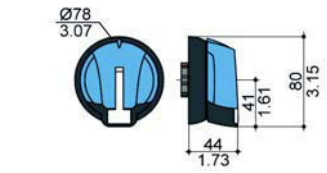	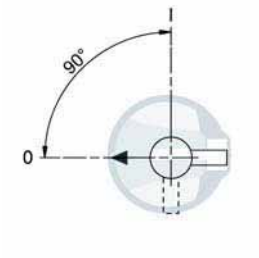	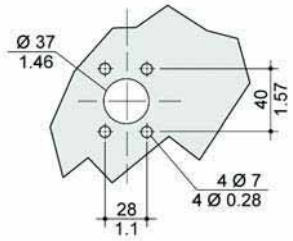
Type S2		
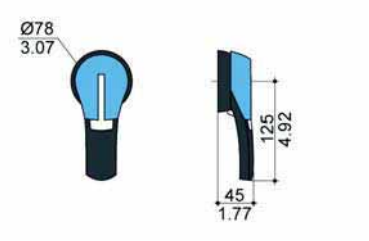	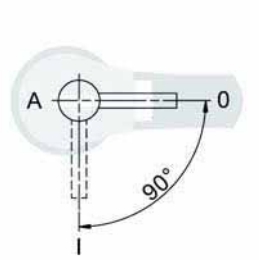	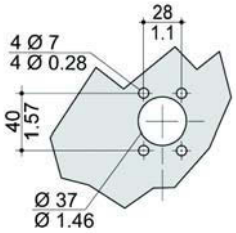
Type S3		
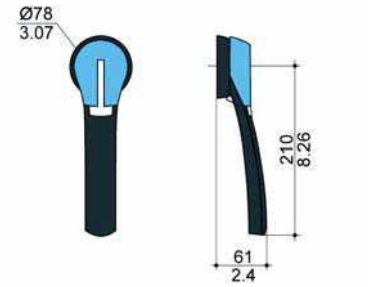	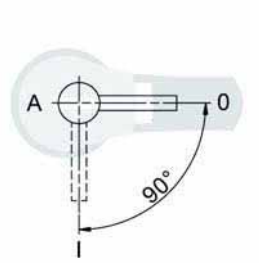	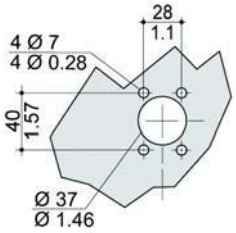
Type S4		
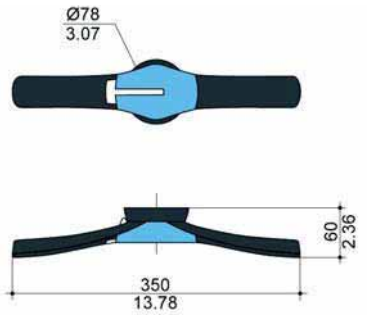	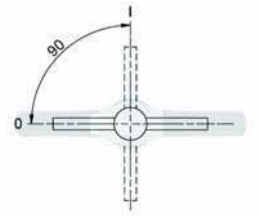	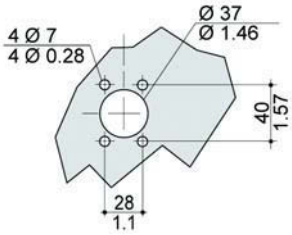

Handle Mechanisms

Contents

Description	*Page*
Handle Mechanisms—Series G	**V4-T2-420**
High-Performance Rotary Handle Mechanisms	**V4-T2-421**
Universal Rotary Product Selection	**V4-T2-427**
Direct (Close-Coupled) Handle Mechanisms	**V4-T2-428**
Flex Shaft	**V4-T2-429**
Handle Mechanisms—Series C	
High-Performance Rotary Handle Mechanisms	**V4-T2-434**
Series C Rotary	**V4-T2-438**
Universal Rotary	**V4-T2-440**
Direct (Close-Coupled) Handle Mechanisms	**V4-T2-442**
Flex Shaft	**V4-T2-444**
Handle Extension	**V4-T2-447**

Universal Rotary

Product Description

Eaton's Universal Rotary is suitable for use with Type 1 or 12 enclosure types. All rotary handle mechanisms include a handle "lock off" to prevent turning the breaker ON while in the OFF position, and indicate ON/OFF/Tripped/Reset positions. The Universal Rotary has the added feature of international markings for ON (I) and OFF (O). The Universal Rotary is made of molded material.

The Universal Rotary mechanisms for EG-, JG- and LG-Frame MCCBs can be operated by hand with the door open or "locked off" to prevent operation with the door open.

Standards and Certifications

Universal Rotary is UL listed and meets CSA requirements. Universal Rotary also meets IEC 60947-1 and IEC 60947-2 for international compliance. Rotary UL File Number is E64983.

Listed

Features

Features Comparison of Series C Rotary and Universal Rotary Handle Mechanism

Rotary	Number of Poles	NEMA Enclosure Type 1	3R	12	4/4X ①	Handle Lock-Off ②	Handle Indication: ON/OFF TRIPPED/RESET	International Markings ON (I) OFF (O)	Handle Material	Available Handle Colors	Handle Rotation	Shaft Lengths (Inches)
Series C rotary	—	■	■	■	■	■	■	■	Metal	Black	45 deg.	6, 12, 16, 24
Universal rotary	—	■	—	■	—	■	■	■	Molded plastic	Yellow/Red/Black	90 deg.	6, 12, 24

Notes

① Type 4/4X application requires special handle. See "Ordering Information."

② All rotary handle mechanisms include a handle "Lock Off" to prevent turning the breaker ON while in the OFF position.

Product Selection

Universal Rotary

Universal Rotary Through-the-Door Handle Mechanisms

Handle Color	UL Rating	Shaft Length in Inches (mm)	Complete Catalog Number ①
EG-Frame			
Black	1, 12	6.00 (152.4)	**EHMVD06B**
		12.00 (304.8)	**EHMVD12B**
		24.00 (609.6)	**EHMVD24B**
Red	1, 12	6.00 (152.4)	**EHMVD06R**
		12.00 (304.8)	**EHMVD12R**
		24.00 (609.6)	**EHMVD24R**
JG-Frame			
Black	1, 12	6.00 (152.4)	**FJHMVD06B**
		12.00 (304.8)	**FJHMVD12B**
		24.00 (609.6)	**FJHMVD24B**
Red	1, 12	6.00 (152.4)	**FJHMVD06R**
		12.00 (304.8)	**FJHMVD12R**
		24.00 (609.6)	**FJHMVD24R**
LG-Frame			
Black	1, 12	6.00 (152.4)	**KLHMVD06B**
		12.00 (304.8)	**KLHMVD12B**
		24.00 (609.6)	**KLHMVD24B**
Red	1, 12	6.00 (152.4)	**KLHMVD06R**
		12.00 (304.8)	**KLHMVD12R**
		24.00 (609.6)	**KLHMVD24R**
NG-Frame			
Black	1	6.00 (152.4)	**HMVD5B**
RG-Frame			
Black	1	9.00 (228.6)	**HMVD6B**

Series G Rotary

Series G Rotary Ordering Information

Shaft Length Inches (mm)	Complete Catalog Number ②	Separate Catalog Number: Standard Handle ③	Separate Catalog Number: Breaker Mechanism ④	Separate Catalog Number: Shaft ⑤	Catalog Number: IEC IP65 ⑥⑦	Catalog Number: IEC IP66 ⑥⑦
N-Frame (ND and NG)						
6.00 (152.4)	**HM5R06**	**6648C22G21**	**6648C23G08**	**4217B37G08**	**WHM5R06**	**WHM5R06X**
12.00 (304.8)	**HM5R12**	**6648C22G21**	**6648C23G08**	**4217B37G05**	**WHM5R12**	**WHM5R12X**
16.00 (406.4)	**HM5R16**	**6648C22G21**	**6648C23G08**	**4217B37G06**	**WHM5R16**	**WHM5R16X**
24.00 (609.6)	**HM5R24**	**6648C22G21**	**6648C23G08**	**4217B37G07**	**WHM5R24**	**WHM5R24X**

Notes

① Complete catalog number includes handle, mechanism, shaft and mounting hardware.
② Complete catalog number includes the standard handle, mechanism, shaft and support brace/bracket.
③ Handle is designed suitable for NEMA Types 1, 3R and 12 enclosures. Use style number **6648C22G03** for Type 4/4X handle or add **X** Suffix to complete catalog number. Handle is cast aluminum.
④ Breaker mechanism includes a shaft support bracket and its parts. Shaft is.50-inch (12.7 mm).
⑤ Longer shafts,16-inch (406.4 mm) and 24-inch (609.6 mm), include an adjustable support extension.
⑥ IEC handle mechanism supplied with metric thread mounting hardware.
⑦ Complete catalog number includes a handle, mechanism and shaft.

Handle Mechanisms

Contents

Description	*Page*
Handle Mechanisms—Series G	**V4-T2-420**
High-Performance Rotary Handle Mechanisms	**V4-T2-421**
Universal Rotary	**V4-T2-426**
Direct (Close-Coupled) Handle Mechanisms Flex Shaft	**V4-T2-429**
Handle Mechanisms—Series C	
High-Performance Rotary Handle Mechanisms	**V4-T2-434**
Series C Rotary	**V4-T2-438**
Universal Rotary	**V4-T2-440**
Direct (Close-Coupled) Handle Mechanisms	**V4-T2-442**
Flex Shaft	**V4-T2-444**
Handle Extension	**V4-T2-447**

Direct (Close-Coupled) Handle Mechanisms

Product Description

Direct (close-coupled) handle mechanisms mount directly to the circuit breaker. They are used in shallow enclosures where the standard variable depth Through-the-door type mechanism is not practical or cannot be used.

The Universal Direct handle mechanisms are rated Type 1 and Type 12.

The Universal Direct handle mechanism is available as standard with a door interlock to prevent opening the enclosure while the circuit breaker is in the ON position. It is also available without a door interlock.

Application Description

Direct (close-coupled) handle mechanisms are typically used for applications where high volume, standardized enclosures are being fabricated.

Standards and Certifications

The Universal Direct handle mechanism is UL listed, IEC 60947-1 and IEC 60947-2 compliant, and meets CSA requirements.

Listed

Product Selection

Universal Direct (EG–LG)

Universal Direct Handle Mechanisms

	Black Handle Color		Red Handle Color	
	With Interlock	Without Interlock	With Interlock	Without Interlock
Frame	Catalog Number	Catalog Number	Catalog Number	Catalog Number
EG	**EHMCCBI**	**EHMCCB**	**EHMCCRI**	**EHMCCR**
JG	**JHMCCBI**	**JHMCCB**	**JHMCCRI**	**JHMCCR**
LG	**LHMCCBI**	**LHMCCB**	**LHMCCRI**	**LHMCCR**

Handle Mechanisms

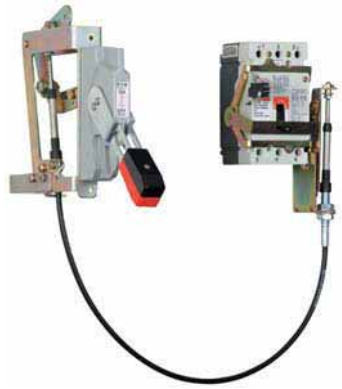

Contents

Description	*Page*
Handle Mechanisms—Series G	**V4-T2-420**
High-Performance Rotary Handle Mechanisms	**V4-T2-421**
Universal Rotary	**V4-T2-426**
Direct (Close-Coupled) Handle Mechanisms	**V4-T2-428**
Flex Shaft	
Product Selection	**V4-T2-430**
Accessories	**V4-T2-431**
Dimensions	**V4-T2-431**
Handle Mechanisms—Series C	
High-Performance Rotary Handle Mechanisms	**V4-T2-434**
Series C Rotary	**V4-T2-438**
Universal Rotary	**V4-T2-440**
Direct (Close-Coupled) Handle Mechanisms	**V4-T2-442**
Flex Shaft	**V4-T2-444**
Handle Extension	**V4-T2-447**

Flex Shaft

Product Description

Flange-Mounted Handle Mechanisms

Flange-mounted handle mechanisms mount on the flange of an enclosure door. The Flex Shaft is an extra heavy-duty mechanism that includes a flexible shaft in various lengths, 3 feet (0.9m) through 10 feet (3m) for use with various size enclosures.

The Flex Shaft handle will accept up to three padlock shackles, each with a maximum diameter of 3/8 inches (9.5 mm). It can be used with Type12 fabricated enclosures. An optional handle is available for Flex Shaft that is suitable for use with Type 4 environments.

Flex Shaft comes preset from the factory, requiring only minor field adjustments on installation, which takes about 10 minutes—a significant time savings compared to installation of other types of flange handle mechanisms. The Flex Shaft mechanism also takes up less interior enclosure space than competitive designs, and the handle fits standard flange cutouts. Flex Shaft handle can be remotely mounted from breaker, where an operator can use it by "funneling" the cable through conduit.

Standards and Certifications

Flex Shaft is UL listed under File E64983 and meets CSA requirements.

Listed

Product Selection

Note: Type 4X handle mechanisms are available. Add Suffix X to the complete Catalog Number.

Note: When selecting the length of shaft, ensure minimum bending radius of 4 inches (101.6 mm) is maintained to operate properly.

Note: The standard method of shipment includes the mechanism preset at the factory; however, minor field adjustments may be required.

Flex Shaft

Flex Shaft Flange-Mounted Handle Mechanisms ①②

Breaker Frame	Flexible Shaft Length in Feet (m) 2 (0.6) Catalog Number	3 (0.9) Catalog Number	4 (1.2) Catalog Number	5 (1.3) Catalog Number	6 (1.8) Catalog Number
EG	EHMFS02	EHMFS03	EHMFS04	EHMFS05	EHMFS06
JG	N/A	JHMFS03	JHMFS04	JHMFS05	JHMFS06
LG	N/A	—	LHMFS04	—	—
NG	N/A	N/A	F5S04C	F5S05C	F5S06C
RG	N/A	N/A	F6S04	F6S05	F6S06

Breaker Frame	Flexible Shaft Length in Feet (m) 7 (2.1) Catalog Number	8 (2.4) Catalog Number	9 (2.7) Catalog Number	10 (3.1) Catalog Number
EG	EHMFS07	EHMFS08	EHMFS09	EHMFS10
JG	JHMFS07	JHMFS08	JHMFS09	JHMFS10
LG	LHMFS07	—	—	LHMFS10
NG	N/A	N/A	N/A	F5S10C
RG	N/A	N/A	N/A	N/A

High-Performance Flex Shaft

High-Performance Flex Shaft Flange Mounted Handle Mechanism ①②

Breaker Frame	Flexible Shaft Length in Feet (m) 2 (0.6) Catalog Number	3 (0.9) Catalog Number	4 (1.2) Catalog Number	5 (1.3) Catalog Number	6 (1.8) Catalog Number
EG	EGFS02HP	EGFS03HP	EGFS04HP	EGFS05HP	EGFS06HP
JG	N/A	JGFS03HP	JGFS04HP	JGFS05HP	JGFS06HP
LG	N/A	N/A	LGFS04HP	N/A	N/A
NG	N/A	N/A	F5S04HP	F5S05HP	F5S06HP
RG	N/A	N/A	F6S04HP	F6S05HP	F6S06HP

Breaker Frame	Flexible Shaft Length in Feet (m) 7 (2.1) Catalog Number	8 (2.4) Catalog Number	9 (2.7) Catalog Number	10 (3.1) Catalog Number
EG	EGFS07HP	EGFS08HP	EGFS09HP	EGFS10HP
JG	JGFS07HP	JGFS08HP	JGFS09HP	JGFS10HP
LG	LGFS07HP	N/A	N/A	LGFS10HP
NG	N/A	N/A	N/A	F5S10HP
RG	N/A	N/A	N/A	N/A

Notes

① Three-pole only for EG-; three- and four-pole for JG- and LG-Frame.
② EG-, JG- and LG-Frame can be left- or right-hand mounted.

Accessories

Handle Auxiliary Switch—Early Break Design, 1A–1B Contact for Flex Shaft

Breaker Frame	Catalog Number
EG	**AUX1EBFSEG**
JG	**AUX1EBFSJG**
LG	**AUX1EBFSLG**

Auxiliary contact changes state prior to parting of breaker contacts to allow for shutdown of equipment. Contacts mounted on breaker mechanism customer supplied wiring.

Type 12 Safety Door Hardware for Flex Shaft (E- through R-Frame) ①

Catalog Number ②
C361KJ4
C361KJ6
C361KR

Dimensions

Type 12 Safety Door Hardware for Flex Shaft (E- through R-Frame) ①

Catalog Number ②	Handle Length in Inches (mm)
C361KJ4	4.00 (101.6)
C361KJ6	6.00 (152.4)
C361KR	Roller latch ③

Notes

① Customer: Consult with box manufacturer for correct door hardware and any adapters required for assembly.

② The 1/4-inch x 1/2-inch (6.35 x 12.7 mm) standard mill rectangular locking bar is not supplied with these kits.

③ Third roller latch for use with 4.00- or 6.00-inch (101.6 or 152.4 mm) handle when three-point latching is required.

Handle Mechanisms

Contents

Description	*Page*
Handle Mechanisms—Series G	**V4-T2-420**
High-Performance Rotary Handle Mechanisms	**V4-T2-421**
Universal Rotary	**V4-T2-426**
Direct (Close-Coupled) Handle Mechanisms	**V4-T2-428**
Flex Shaft	**V4-T2-429**
Handle Mechanisms—Series C	
High-Performance Rotary Handle Mechanisms	**V4-T2-434**
Series C Rotary	**V4-T2-438**
Universal Rotary	**V4-T2-440**
Direct (Close-Coupled) Handle Mechanisms	**V4-T2-442**
Flex Shaft	**V4-T2-444**
Handle Extension	**V4-T2-447**

Handle Mechanisms—Series C

Product Overview

Handle mechanisms are used to operate molded case circuit breakers, molded case switches and motor circuit protectors. They are available in three basic configurations—Flange Mounted, Through-the-Door and Direct (Close-Coupled)—providing safe, dependable operation and ease of installation.

Through-the-Door

- High-Performance Rotary
- Series C Rotary
- Universal Rotary

Direct (Close-Coupled)

- Universal Direct
- Euro IEC
- G Direct

Flange Mounted

- Flex Shaft
- C371

Handle mechanisms are used on enclosed circuit breakers, control panels and motor control centers in many different applications. Eaton has a handle mechanism for virtually any need.

Through-the-Door Handle Mechanisms

Eaton's through-the-door handle mechanisms mount on the front of an enclosure or cabinet door and externally operate the circuit breaker via a variable depth shaft or a linear operator (Type MC). Each rotary type handle mechanism includes a handle, base operating mechanism and shaft that can be cut to various lengths.

Series C Rotary and Universal Rotary handle mechanisms are for use with molded case circuit breakers (G, F, J, K, L, MDL), molded case switches and motor circuit protectors.

Type 4/4X handles are similar to standard handles except they include an internal neoprene gasket. Type 4/4X handle style number is 6648C22G03. Due to gasketing effect between the handle and the housing, the handle may not indicate a tripped position.

Universal Rotary F-Frame

Direct (Close-Coupled) Handle Mechanisms

Direct (close-coupled) handle mechanisms mount directly to the circuit breaker. They are used in shallow enclosures where the standard variable depth Through-the-door type mechanism is not practical or cannot be used. They are typically for applications where high volume, standardized enclosures are being fabricated.

The Euro IEC Direct handle mechanism can be used on F- through R-Frames.

The G Direct is available with a black or the yellow handle, and with or without a shroud. It is suitable for use with NEMA 1 enclosures. It is for use only with the G-Frame (GD, GC, GHC, GMCP).

An escutcheon ring and interlock clip are provided as standard. The standard design includes a lock-off feature.

Flange-Mounted Handle Mechanisms

Flange-mounted handle mechanisms mount on the flange of an enclosure door. The Flex Shaft is an extra heavy-duty mechanism that includes a flexible shaft in various lengths, 3 feet (0.9m) through 10 feet (3m) for use with various size enclosures.

The Flex Shaft handle will accept up to three padlock shackles, each with a maximum diameter of 3/8-inch (9.5 mm). Can be used with NEMA 1, 3R and 12 fabricated enclosures. An optional handle is available for Flex Shaft that is suitable for use with NEMA 4 and 4X environments. Flex Shaft comes preset from the factory, requiring only minor field adjustments on installation, which takes about 10 minutes—a significant time savings compared to installation of other types of flange handle mechanisms. The Flex Shaft mechanism also takes up less interior enclosure space than competitive designs and the handle fits standard flange cutouts. Flex Shaft handle can be remotely mounted from breaker, where an operator can use it by "funneling" the cable through conduit.

The Type C371 circuit breaker operating mechanisms are designed for installation in control enclosures where main or branch circuit protective devices are required. All circuit breaker mechanisms are suitable for right-hand mounting.

Auxiliary contacts are not available for mounting on operating mechanisms. Where required, have them installed in circuit breaker.

Handle Extension

Handle extension is not included with J, K, L, M and N-Frame breakers. It must be purchased separately.

Standards and Certifications

Type C371 is UL Listed under File E62635.

Flex Shaft is UL Listed under File E64983 and meets CSA requirements.

Series C Rotary and Universal Rotary, are UL Listed and meet CSA requirements. Universal Rotary also meets IEC 60947-1 and IEC 60947-2 for international compliance. Rotary UL File Number is E64983.

The Universal Direct handle mechanism is UL 489 Listed, IEC 60947-1 and IEC 60947-2, and meets CSA requirements. The Euro IEC Direct handle mechanism is IEC-240-1. G Direct is UL Listed and meets CSA requirements.

Listed

Handle Mechanisms

Description	*Page*
Handle Mechanisms—Series G	**V4-T2-420**
High-Performance Rotary Handle Mechanisms	**V4-T2-421**
Universal Rotary	**V4-T2-426**
Direct (Close-Coupled) Handle Mechanisms	**V4-T2-428**
Flex Shaft	**V4-T2-429**
Handle Mechanisms—Series C	
High-Performance Rotary Handle Mechanisms	**V4-T2-434**
Product Selection	**V4-T2-435**
Dimensions	**V4-T2-437**
Series C Rotary	**V4-T2-438**
Universal Rotary	**V4-T2-440**
Direct (Close-Coupled) Handle Mechanisms	**V4-T2-442**
Flex Shaft	**V4-T2-444**
Handle Extension	**V4-T2-447**

High-Performance Rotary Handle Mechanisms

Product Description

The high-performance rotary handle mechanism uses a simple, yet robust design to make installation and operation easy. The external handle's key functional components are all metallic, ensuring reliability. The metal-on-metal interface between the handle and shaft prevents contaminant buildup that could impede operation, while UV and chemical agent resistant materials protect the handle from heat and fading in direct sunlight, as well as chemicals that may be introduced in harsh environments.

In addition to its robust design features, the handle mechanism has stand-off support that allows for easy operation with a gloved hand. With a shallow profile, the handle can easily be used in applications where an internal or double door is required.

The high-performance external handle can accept padlocks or multi-hasp locks. The door is interlocked when padlocked and cannot be bypassed.

Features

- NEMA Type 1/3R/12 (IP54) and NEMA Type 4/4X (IP65) ratings
- Black/Blue or Red/Yellow external handle colors
- Three shaft lengths—6, 12 and 24 inches, which can be cut to size to match enclosure depth
- Conveniently packaged as kit containing handle, shaft and mechanism
- Replacement parts are available separately
- Metallic functional components ensure reliability
- Metal-on-metal interface between handle and shaft
- UV and chemical agent-resistant materials protect the handle
- Shallow profile
- Compatible with both Series C and Series G molded case circuit breakers and molded case switch platforms
- Same handle can be used on multiple frames sizes reducing the number of parts needed
- Red and yellow handles to designate emergency disconnecting means
- All handle mechanisms can accept padlocks or multi-hasp locks for added flexibility
- Fast, easy installation (see video on website for step-by-step instructions)

Standards and Certifications

The mechanisms for EG, JG and LG breakers have an internal handle that can be operated independent of door position, and locked-out to meet one of the key NFPA requirements (NFPA® 79) and UL 508A disconnect requirements.

- NEMA 1/3R/12, IP54
- NEMA 4/4X, IP65

Listed

Product Selection

Handle Mechanisms for Series C Frames

Kits Only (Kit Includes Shaft, Mechanism and Handle)—GC/GD- and GMCP-Frame

	Description	Rating Type NEMA	IP	GC/GD-Frame Catalog Number	GMCP-Frame Catalog Number
S01 Blue Handle	S01 blue handle, 12-inch shaft	1/3R/12	54	**GCHMVD12B / 68C6039G01**	**GMHMVD12B / 68C6039G05**
		4/4X	65	**GCHMVD12BX / 68C6039G03**	**GMHMVD12BX / 68C6039G07**
S01 Red Handle	S01 red handle, 12-inch shaft	1/3R/12	54	**GCHMVD12R / 68C6039G02**	**GMHMVD12R / 68C6039G06**
		4/4X	65	**GCHMVD12RX / 68C6039G04**	**GMHMVD12RX / 68C6039G08**

Separate Components for Series C Frames

Series C Components—Shaft and Mechanism

Frame	Shaft Width	Shaft Length 6-Inch	10-Inch	12-Inch	Mechanism Only
GC/GD	6 mm	—	—	**66A6013H02**	**GCHMVD / 2A92095G15**
GMCP	6 mm	—	—	**66A6013H02**	**GMHMVD / 2A92095G16**
GD	8 mm	**66A6010G95**	—	**66A6010G96**	**1498D34G90**
FD	8 mm	**66A6010G95**	—	**66A6010G96**	**1498D34G91**
JD	10 mm	**66A6012G15**	—	**66A6012G16**	**1498D34G92**
KD	10 mm	**66A6012G15**	—	**66A6012G16**	**1498D34G93**
LD	10 mm	**66A6012G15**	—	**66A6012G16**	**1498D34G94**
MDL	10 mm	**66A6012G15**	—	**66A6012G16**	**1498D34G95**
ND	12 mm	—	**66A6013H01**	—	**69D9101G30**
RD	12 mm	—	**66A6013H01**	—	**69D9101G31**

Note

Shaft guide (68C6048G49) is optional and can be used with any high-performance handle listed above for greater alignment tolerance.

Series C Components—Handles Only

	Rating Type		Handles Only							
Frame	NEMA	IP	S01 Blue/Black	S01 Red/Yellow	S2 Blue/Black	S2 Red/Yellow	S3 Blue/Black	S3 Red/Yellow	S4 Blue/Black	S4 Red/Yellow
GC/GD	1/3R/12	54	**68C6048G41**	**68C6048G42**	—	—	—	—	—	—
	4/4X	65	**68C6048G43**	**68C6048G44**	—	—	—	—	—	—
GMCP	1/3R/12	54	**68C6048G41**	**68C6048G42**	—	—	—	—	—	—
	4/4X	65	**68C6048G43**	**68C6048G44**	—	—	—	—	—	—
GD	1/3R/12	54	**68C6048G41**	**68C6048G42**	**68C6048G01**	**68C6048G02**	—	—	—	—
	4/4X	65	**68C6048G43**	**68C6048G44**	**68C6048G03**	**68C6048G04**	—	—	—	—
FD	1/3R/12	54	**68C6048G41**	**68C6048G42**	**68C6048G01**	**68C6048G02**	—	—	—	—
	4/4X	65	**68C6048G43**	**68C6048G44**	**68C6048G03**	**68C6048G04**	—	—	—	—
JD	1/3R/12	54	—	—	**68C6048G01**	**68C6048G02**	—	—	—	—
	4/4X	65	—	—	**68C6048G03**	**68C6048G04**	—	—	—	—
KD	1/3R/12	54	—	—	**68C6048G01**	**68C6048G02**	—	—	—	—
	4/4X	65	—	—	**68C6048G03**	**68C6048G04**	—	—	—	—
LD	1/3R/12	54	—	—	**68C6048G01**	**68C6048G02**	**68C6048G05**	**68C6048G06**	—	—
	4/4X	65	—	—	**68C6048G03**	**68C6048G04**	**68C6048G07**	**68C6048G08**	—	—
MDL	1/3R/12	54	—	—	**68C6048G01**	**68C6048G02**	**68C6048G05**	**68C6048G06**	—	—
	4/4X	65	—	—	**68C6048G03**	**68C6048G04**	**68C6048G07**	**68C6048G08**	—	—
ND	1/3R/12	54	—	—	—	—	**68C6048G05**	**68C6048G06**	**68C6048G09**	**68C6048G10**
	4/4X	65	—	—	—	—	**68C6048G07**	**68C6048G08**	**68C6048G11**	**68C6048G12**
RD	1/3R/12	54	—	—	—	—	—	—	**68C6048G09**	**68C6048G10**
	4/4X	65	—	—	—	—	—	—	**68C6048G11**	**68C6048G12**

Note

Shaft guide (68C6048G49) is optional and can be used with any high-performance handle listed above for greater alignment tolerance.

Dimensions

Approximate Dimensions in mm (Inches)

High-Performance Rotary Handle Mechanisms

Handle Type	Front Operation Direction of Operation	Door Drilling
Type S01		
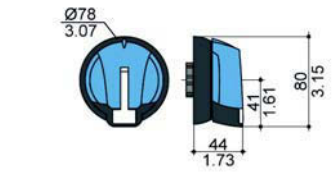	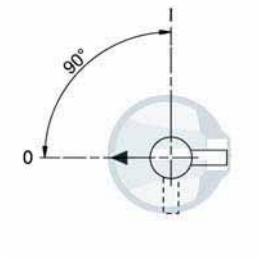	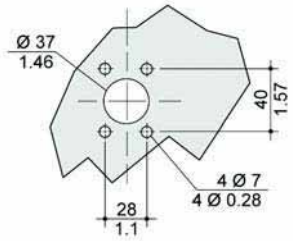
Type S2		
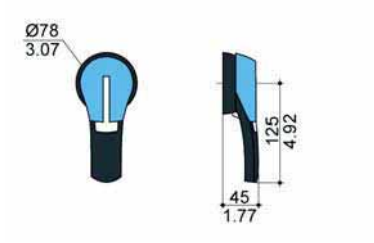	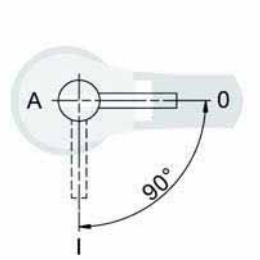	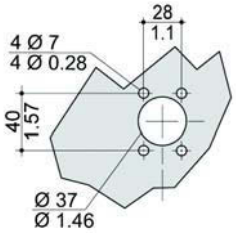
Type S3		
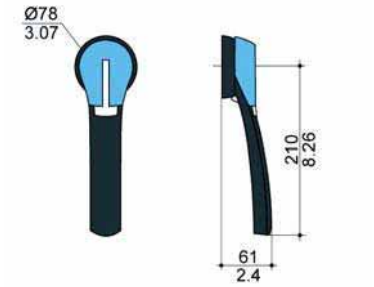	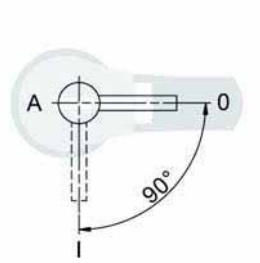	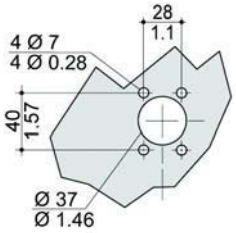
Type S4		
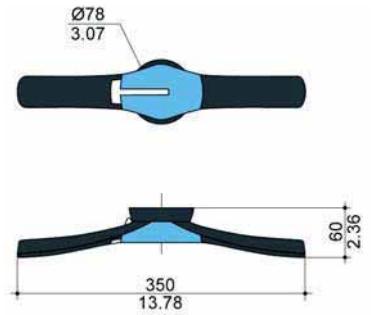	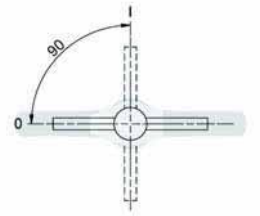	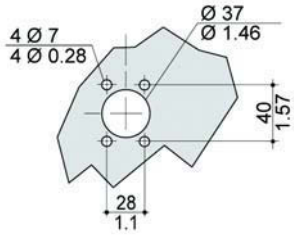

Handle Mechanisms

Contents

Description	*Page*
Handle Mechanisms—Series G	**V4-T2-420**
High-Performance Rotary Handle Mechanisms	**V4-T2-421**
Universal Rotary	
Direct (Close-Coupled) Handle Mechanisms	**V4-T2-428**
Flex Shaft	**V4-T2-429**
Handle Mechanisms—Series C	
High-Performance Rotary Handle Mechanisms	**V4-T2-434**
Series C Rotary	**V4-T2-438**
Product Selection	**V4-T2-439**
Universal Rotary	**V4-T2-440**
Direct (Close-Coupled) Handle Mechanisms	**V4-T2-442**
Flex Shaft	**V4-T2-444**
Handle Extension	**V4-T2-447**

Series C Rotary

Product Description

Eaton's through-the-door handle mechanisms mount on the front of an enclosure or a cabinet door and externally operate the circuit breaker via a variable depth shaft or a linear operator (Type MC). Each rotary type handle mechanism includes a handle, a base operating mechanism and a shaft that can be cut to various lengths.

Series C Rotary handle mechanisms are used with molded case circuit breakers (F, J, K, L, MDL), molded case switches and motor circuit protectors.

These rotary handles are robust and durable, made entirely of metal parts. It also has a lock-out tag-out level at the tip of the handle for padlocking.

NEMA Type 4/4X handles are similar to standard handles except they include an internal neoprene gasket. NEMA Type 4/4X handle style number is 6648C22G03. Due to gasketing effect between the handle and the housing, the handle may not indicate a tripped position.

Standards and Certifications

Series C Rotary is UL listed and meets CSA requirements.

Listed

Features

Features Comparison of Series C Rotary and Universal Rotary Handle Mechanism

Rotary	Number of Poles	NEMA Enclosure Type 1	3R	12	4/4X ①	Handle Lock-Off ②	Handle Indication: ON/OFF TRIPPED/RESET	International Markings ON (I) OFF (O)	Handle Material	Available Handle Colors	Handle Rotation	Shaft Lengths (Inches)
Series C rotary	—	■	■	■	■	■	■	■	Metal	Black	45 deg.	6, 12, 16, 24
Universal rotary	—	■	—	■	—	■	■	■	Molded plastic	Yellow/Red/Black	90 deg.	6, 12, 24

Notes

① Type 4/4X application requires special handle. See "Ordering Information."

② All rotary handle mechanisms include a handle "Lock Off" to prevent turning the breaker ON while in the OFF position.

Product Selection

Through-the-Door Handle Mechanisms

Series C Rotary

Series C Rotary Ordering Information

Shaft Length Inches (mm)	Complete Catalog Number ①	Separate Catalog Number: Standard Handle ②	Separate Catalog Number: Breaker Mechanism ③	Separate Catalog Number: Shaft ④	Catalog Number: IEC IP65 ⑤⑥	Catalog Number: IEC IP66 ⑤⑥
F-Frame						
6.00 (152.4)	**HM1R06**	**6648C22G25**	**6648C23G11**	**4217B37G08**	**WHM1R06**	**WHM1R06X**
12.00 (304.8)	**HM1R12**	**6648C22G25**	**6648C23G11**	**4217B37G05**	**WHM1R12**	**WHM1R12X**
16.00 (406.4)	**HM1R16**	**6648C22G25**	**6648C23G11**	**4217B37G06**	**WHM1R16**	**WHM1R16X**
24.00 (609.6)	**HM1R24**	**6648C22G25**	**6648C23G11**	**4217B37G07**	**WHM1R24**	**WHM1R24X**
J-Frame						
6.00 (152.4)	**HM2R06**	**6648C22G01**	**6648C23G21**	**4217B37G08**	**WHM2R06**	**WHM2R06X**
12.00 (304.8)	**HM2R12**	**6648C22G01**	**6648C23G21**	**4217B37G05**	**WHM2R12**	**WHM2R12X**
16.00 (406.4)	**HM2R16**	**6648C22G01**	**6648C23G21**	**4217B37G06**	**WHM2R16**	**WHM2R16X**
24.00 (609.6)	**HM2R24**	**6648C22G01**	**6648C23G21**	**4217B37G07**	**WHM2R24**	**WHM2R24X**
K-Frame						
6.00 (152.4)	**HM3R06**	**6648C22G01**	**6648C23G25**	**4217B37G08**	**WHM3R06**	**WHM3R06X**
12.00 (304.8)	**HM3R12**	**6648C22G01**	**6648C23G25**	**4217B37G05**	**WHM3R12**	**WHM3R12X**
16.00 (406.4)	**HM3R16**	**6648C22G01**	**6648C23G25**	**4217B37G06**	**WHM3R16**	**WHM3R16X**
24.00 (609.6)	**HM3R24**	**6648C22G01**	**6648C23G25**	**4217B37G07**	**WHM3R24**	**WHM3R24X**
L- and MDL-Frame						
6.00 (152.4)	**HM4R06**	**6648C22G11**	**6648C23G19**	**4217B37G08**	**WHM4R06**	**WHM4R06X**
12.00 (304.8)	**HM4R12**	**6648C22G11**	**6648C23G19**	**4217B37G05**	**WHM4R12**	**WHM4R12X**
16.00 (406.4)	**HM4R16**	**6648C22G11**	**6648C23G19**	**4217B37G06**	**WHM4R16**	**WHM4R16X**
24.00 (609.6)	**HM4R24**	**6648C22G11**	**6648C23G19**	**4217B37G07**	**WHM4R24**	**WHM4R24X**
MD/MDS						
6.00 (152.4)	**HM7R06**	**6648C22G21**	**6648C23G17**	**4217B37G08**	—	—
12.00 (304.8)	**HM7R12**	**6648C22G21**	**6648C23G17**	**4217B37G05**	—	—
16.00 (406.4)	**HM7R16**	**6648C22G21**	**6648C23G17**	**4217B37G06**	—	—
24.00 (609.6)	**HM7R24**	**6648C22G21**	**6648C23G17**	**4217B37G07**	—	—
N-Frame (ND and NG)						
6.00 (152.4)	**HM5R06**	**6648C22G21**	**6648C23G08**	**4217B37G08**	**WHM5R06**	**WHM5R06X**
12.00 (304.8)	**HM5R12**	**6648C22G21**	**6648C23G08**	**4217B37G05**	**WHM5R12**	**WHM5R12X**
16.00 (406.4)	**HM5R16**	**6648C22G21**	**6648C23G08**	**4217B37G06**	**WHM5R16**	**WHM5R16X**
24.00 (609.6)	**HM5R24**	**6648C22G21**	**6648C23G08**	**4217B37G07**	**WHM5R24**	**WHM5R24X**

Notes

① Complete catalog number includes the standard handle, mechanism, shaft and support brace/bracket.
② Handle is designed suitable for NEMA Types 1, 3R and 12 enclosures. Use style number **6648C22G03** for Type 4/4X handle or add **X** Suffix to complete catalog number. Handle is cast aluminum.
③ Breaker mechanism includes a shaft support bracket and its parts. Shaft is.50-inch (12.7 mm).
④ Longer shafts,16-inch (406.4 mm) and 24-inch (609.6 mm), include an adjustable support extension.
⑤ IEC handle mechanism supplied with metric thread mounting hardware.
⑥ Complete catalog number includes a handle, mechanism and shaft.

Handle Mechanisms

Contents

Description	*Page*
Handle Mechanisms—Series G	**V4-T2-420**
High-Performance Rotary Handle Mechanisms	**V4-T2-421**
Universal Rotary	
Product Selection	**V4-T2-427**
Direct (Close-Coupled) Handle Mechanisms	**V4-T2-428**
Flex Shaft	**V4-T2-429**
Handle Mechanisms—Series C	
High-Performance Rotary Handle Mechanisms	**V4-T2-434**
Series C Rotary	**V4-T2-438**
Universal Rotary	**V4-T2-440**
Product Selection	**V4-T2-441**
Direct (Close-Coupled) Handle Mechanisms	**V4-T2-442**
Flex Shaft	**V4-T2-444**
Handle Extension	**V4-T2-447**

Universal Rotary

Product Description

Eaton's Universal Rotary is suitable for use with Type 1 or 12 enclosure types. All rotary handle mechanisms include a handle "lock off" to prevent turning the breaker ON while in the OFF position, and indicate ON/OFF/Tripped/Reset positions. The Universal Rotary has the added feature of international markings for ON (I) and OFF (O). The Universal Rotary is made of molded material.

The Universal Rotary mechanisms for EG-, JG- and LG-Frame MCCBs can be operated by hand with the door open or "locked off" to prevent operation with the door open.

Standards and Certifications

Universal Rotary is UL listed and meets CSA requirements. Universal Rotary also meets IEC 60947-1 and IEC 60947-2 for international compliance. Rotary UL File Number is E64983.

Listed

Features

Features Comparison of Series C Rotary and Universal Rotary Handle Mechanism

Rotary	Number of Poles	NEMA Enclosure Type 1	3R	12	4/4X ①	Handle Lock-Off ②	Handle Indication: ON/OFF TRIPPED/RESET	International Markings ON (I) OFF (O)	Handle Material	Available Handle Colors	Handle Rotation	Shaft Lengths (Inches)
Series C rotary	—	■	■	■	■	■	■	■	Metal	Black	45 deg.	6, 12, 16, 24
Universal rotary	—	■	—	■	—	■	■	■	Molded plastic	Yellow/Red/Black	90 deg.	6, 12, 24

Notes

① Type 4/4X application requires special handle. See "Ordering Information."

② All rotary handle mechanisms include a handle "Lock Off" to prevent turning the breaker ON while in the OFF position.

Product Selection

Universal Rotary F-Frame

Universal Rotary F-Frame

Series C Universal Rotary ①

Handle Color	Shaft Length in Inches (mm)	Complete Catalog Number
G-Frame		
Black	6.00 (152.4)	**GHMVD06B**
	12.00 (304.8)	**GHMVD12B**
Red	6.00 (152.4)	**GHMVD06R**
	12.00 (304.8)	**GHMVD12R**
F-Frame		
Black	6.00 (152.4)	**FHMVD06B**
	12.00 (304.8)	**FHMVD12B**
Red	6.00 (152.4)	**FHMVD06R**
	12.00 (304.8)	**FHMVD12R**
	24.00 (609.6)	**FHMVD24R**
J-Frame		
Black	6.00 (152.4)	**JHMVD06B**
	12.00 (304.8)	**JHMVD12B**
Red	6.00 (152.4)	**JHMVD06R**
	12.00 (304.8)	**JHMVD12R**
K-Frame		
Black	6.00 (152.4)	**KHMVD06B**
	12.00 (304.8)	**KHMVD12B**
Red	6.00 (152.4)	**KHMVD06R**
	12.00 (304.8)	**KHMVD12R**
L-Frame		
Black	6.00 (152.4)	**LHMVD06B**
	12.00 (304.8)	**LHMVD12B**
Red	6.00 (152.4)	**LHMVD06R**
	12.00 (304.8)	**LHMVD12R**

Note

① Only available as complete handle mechanism. Parts not sold separately.

Handle Mechanisms

Contents

Description	*Page*
Handle Mechanisms—Series G	**V4-T2-420**
High-Performance Rotary Handle Mechanisms	**V4-T2-421**
Universal Rotary	**V4-T2-426**
Direct (Close-Coupled) Handle Mechanisms Flex Shaft	**V4-T2-429**
Handle Mechanisms—Series C	
High-Performance Rotary Handle Mechanisms	**V4-T2-434**
Series C Rotary	**V4-T2-438**
Direct (Close-Coupled) Handle Mechanisms	**V4-T2-442**
Product Selection	**V4-T2-443**
Flex Shaft	**V4-T2-444**
Handle Extension	**V4-T2-447**

Direct (Close-Coupled) Handle Mechanisms

Product Description

Direct (close-coupled) handle mechanisms mount directly to the circuit breaker. They are used in shallow enclosures where the standard variable depth Through-the-door type mechanism is not practical or cannot be used.

The Universal Direct handle mechanisms are rated Type 1 and Type 12.

The Universal Direct handle mechanism is available as standard with a door interlock to prevent opening the enclosure while the circuit breaker is in the ON position. It is also available without a door interlock.

Application Description

Direct (close-coupled) handle mechanisms are typically used for applications where high volume, standardized enclosures are being fabricated.

Standards and Certifications

The Universal Direct handle mechanism is IEC 60947-1 and IEC 60947-2 compliant.

Product Selection

Direct (Close-Coupled) Handle Mechanisms

Euro IEC Direct

Frame	Black Handle Catalog Number
F	**HMCC1B**
J	**HMCC2B**
K	**HMCC3B**
L and M	**HMCC4B**
N	**HMVD5B**
R	**HMVD6B**

G Direct ①

Frame	Black Handle With Shroud Catalog Number	Black Handle Without Shroud Catalog Number	Yellow Handle With Shroud Catalog Number	Yellow Handle Without Shroud Catalog Number
GD/GHC	**HRGCC1S**	**HRGCC10**	**HRGCC3S**	**HRGCC30**
GMCP	**HRGMC1S**	**HRGMC10**	**HRGMC3S**	**HRGMC30**

Note

① Suitable for use on two- or three-pole G-Frame.

Handle Mechanisms

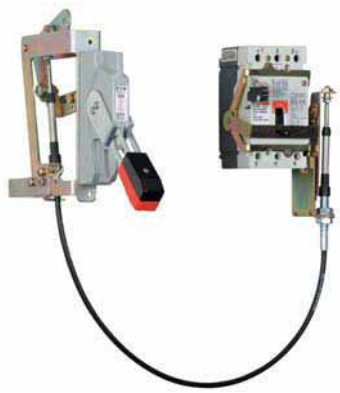

Contents

Description	*Page*
Handle Mechanisms—Series G	**V4-T2-420**
High-Performance Rotary Handle Mechanisms	**V4-T2-421**
Universal Rotary	**V4-T2-426**
Direct (Close-Coupled) Handle Mechanisms	**V4-T2-428**
Flex Shaft	
Handle Mechanisms—Series C	
High-Performance Rotary Handle Mechanisms	**V4-T2-434**
Series C Rotary	**V4-T2-438**
Direct (Close-Coupled) Handle Mechanisms	**V4-T2-442**
Flex Shaft	**V4-T2-444**
Product Selection	**V4-T2-445**
Handle Extension	**V4-T2-447**

Flex Shaft

Product Description

Flange-Mounted Handle Mechanisms

Flange-mounted handle mechanisms mount on the flange of an enclosure door. The Flex Shaft is an extra heavy-duty mechanism that includes a flexible shaft in various lengths, 3 feet (0.9m) through 10 feet (3m) for use with various size enclosures.

The Flex Shaft handle will accept up to three padlock shackles, each with a maximum diameter of 3/8 inches (9.5 mm). It can be used with Type12 fabricated enclosures. An optional handle is available for Flex Shaft that is suitable for use with Type 4 environments.

Flex Shaft comes preset from the factory, requiring only minor field adjustments on installation, which takes about 10 minutes—a significant time savings compared to installation of other types of flange handle mechanisms. The Flex Shaft mechanism also takes up less interior enclosure space than competitive designs, and the handle fits standard flange cutouts. Flex Shaft handle can be remotely mounted from breaker, where an operator can use it by "funneling" the cable through conduit.

Standards and Certifications

Flex Shaft is UL listed under File E64983 and meets CSA requirements.

Listed

Product Selection

Handle Mechanisms

Flex Shaft ①②

Breaker Frame	Flexible Shaft Length in Feet (m) 3 (0.9) Catalog Number	4 (1.2) Catalog Number	5 (1.5) Catalog Number	6 (1.8) Catalog Number	7 (2.1) Catalog Number	8 (2.4) Catalog Number	9 (2.7) Catalog Number	10 (3.0) Catalog Number
G ①	**F0S03C**	**F0S04C**	**F0S05C**	**F0S06C**	—	—	—	—
F	**F1S03C**	**F1S04C**	**F1S05C**	**F1S06C**	**F1S07C**	**F1S08C**	**F1S09C**	**F1S10C**
F (dual)	**F1S03CD**	**F1S04CD**	**F1S05CD**	**F1S06CD**	**F1S07CD**	**F1S08CD**	**F1S09CD**	**F1S10CD**
J	**F2S03C**	**F2S04C**	**F2S05C**	**F2S06C**	**F2S07C**	**F2S08C**	**F2S09C**	**F2S10C**
K	**F3S03C**	**F3S04C**	**F3S05C**	**F3S06C**	**F3S07C**	**F3S08C**	**F3S09C**	**F3S10C**
L and MDL	—	**F4S04C**	**F4S05C**	**F4S06C**	—	—	—	**F4S10C**
N	—	**F5S04C**	**F5S05C**	**F5S06C**	—	—	—	**F5S10C**
R	—	**F6S04**	**F6S05**	**F6S06**	—	—	—	—
MD, MDS (old)	—	**F7S04**	**F7S05**	**F7S06**	—	—	—	**F7S10C**

High Performance Flex Shaft ①②

Breaker Frame	Flexible Shaft Length in Feet (m) 3 (0.9) Catalog Number	4 (1.2) Catalog Number	5 (1.3) Catalog Number	6 (1.8) Catalog Number	7 (2.1) Catalog Number	8 (2.4) Catalog Number	9 (2.7) Catalog Number	10 (3.1) Catalog Number
G	**F0S03HP**	**F0S04HP**	**F0S05HP**	**F0S06HP**	**N/A**	**N/A**	**N/A**	**N/A**
F	**F1S03HP**	**F1S04HP**	**F1S05HP**	**F1S06HP**	**F1S07HP**	**F1S08HP**	**F1S09HP**	**F1S10HP**
F (dual)	**F1S03HPD**	**F1S04HPD**	**F1S05HPD**	**F1S06HPD**	**F1S07HPD**	**F1S08HPD**	**F1S09HPD**	**F1S10HPD**
J	**F2S03HP**	**F2S04HP**	**F2S05HP**	**F2S06HP**	**F2S07HP**	**F2S08HP**	**F2S09HP**	**F2S10HP**
K	**F3S03HP**	**F3S04HP**	**F3S05HP**	**F3S06HP**	**F3S07HP**	**F3S08HP**	**F3S09HP**	**F3S10HP**
L and MDL	**N/A**	**F4S04HP**	**F4S05HP**	**F4S06HP**	**N/A**	**N/A**	**N/A**	**F4S10HP**
N	**N/A**	**F5S04HP**	**F5S05HP**	**F5S06HP**	**N/A**	**N/A**	**N/A**	**F5S10HP**
R	**N/A**	**F6S04HP**	**F6S05HP**	**F6S06HP**	**N/A**	**N/A**	**N/A**	**N/A**

Flange-Mounted Handle Mechanisms

Type C371

Circuit Breaker or Motor Circuit Protector	Frame Size	Variable Depth Mounting Range Min./Max. ②③	Operating Mechanism Only ④ Catalog Number	Operating Mechanism w/ 4-Inch Handle For NEMA 1–12 Enclosure Catalog Number	Operating Mechanism w/ 4-Inch Handle For NEMA 4/4X Enclosure Catalog Number
HMCP and Series C—EHD, FDB, FD, FDC, HFD, ED	150	6.50–16 (165.1–406.4)	**C371E**	**C371E1**	**C371E2**
HMCP and Series C—HJD, JD, JDB, JDC	250	6.50–16.63 (165.1–422.4)	**C371F**	**C371F5**	**C371F6**
HMCP and Series C—DK, HKD, KD, KDB	400	6.50–16.63 (165.1–422.4)	**C371F**	**C371F5**	**C371F6**
Series C—HLD, LD, LDC	600	8.50–22 (215.9–558.8)	**C371G**	**C371G5**	**C371G6**
Series C MD, MDS—(No MDL)	800	8.75–22 (222.3–558.8)	**C371K**	**C371K5**	**C371K6**
Series C—HND, ND, NDC	1200	9.75–22 (247.7–558.8)	**C371K**	**C371K5**	**C371K6**

Notes

① Suitable for GC/GD MCCB; not suitable for GMCP.

② For increased maximum allowable depth, see connecting rods on **Page V4-T2-446**.

③ Dimensions shown are from panel flange surface.

④ Does not include handle.

Type 4/4X handle mechanisms are available. Add Suffix **X** to complete catalog number. Add Suffix I to complete catalog number for IEC handle. Original narrow handle design (No C Suffix) is available. Remove C from catalog number.

When selecting the length of shaft, ensure minimum bending radius of 4 inches (101.6 mm) (5 inches, 12.7 mm for L-, N- and R-Frames) is maintained to operate properly. The standard method of shipment includes the mechanism preset at the factory; however, minor field adjustments may be required.

Dual breakers operator available on F-Frame only. Only the F, J and K can mount LH and RH all other RH only.

Approximate Dimensions in Inches (mm)

Handle Only

Circuit Breaker Frame Size (Amperes)	NEMA Enclosure Type	Operating Handle Length	Catalog Number
150	1/3R/3/12	4.00 (101.6)	**C371H1**
	4/4X	4.00 (101.6)	**C371H2**
	1/3R/3/12	6.00 (152.4)	**C371H3**
	4/4X	6.00 (152.4)	**C371H4**
250–1200	1/3R/3/12	4.00 (101.6)	**C371H5**
	4/4X	4.00 (101.6)	**C371H6**
	1/3R/3/12	6.00 (152.4)	**C371H7**
	4/4X	6.00 (152.4)	**C371H8**

Channel Support Kit (Rod Not Supplied)

For use to prevent bending of the operating handle mounting surface. This is especially useful when the operating handle is mounted on a channel in a multi-door enclosure.

Amperes	Catalog Number
600–1200	**C371CS6**

Connecting Rods ①

Application	Catalog Number
Disconnect switches (30, 60, 100, 200 A sizes)	**C371CS1**
Circuit breakers (150, 250, 400 A sizes)	**C371CS1**
Circuit breakers (600, 800, 1200 A sizes)	**C371CS2**

Note

① Increase maximum allowable depth by 5 inches (127 mm).

Handle Extension

Contents

Description	Page
Handle Mechanisms—Series G	V4-T2-420
High-Performance Rotary Handle Mechanisms	V4-T2-421
Universal Rotary	V4-T2-426
Direct (Close-Coupled) Handle Mechanisms	V4-T2-428
Flex Shaft	
Handle Mechanisms—Series C	
High-Performance Rotary Handle Mechanisms	V4-T2-434
Series C Rotary	V4-T2-438
Direct (Close-Coupled) Handle Mechanisms	V4-T2-442
Flex Shaft	V4-T2-444
Product Selection	V4-T2-445
Handle Extension	V4-T2-447

Handle Extension

Product Description

- Suitable for use on two- or three-pole G-Frame
- Not included with J, K, L, M and N-Frame breakers; it must be purchased separately
- Included with R-Frame breakers

Product Selection

Handle Extension

Handle Extension ①②

Frame	Style Number
J, K	**HEX3**
L, M	**HEX4**
N	**HEX5**
R	**HEX6**

Notes

① Handle extension is not included with J, K, L, M and N-Frame breakers. It must be purchased separately.

② Handle extension is included with breaker with R-Frame breakers.