Precision Power. Perfect Light.

# Product Catalog

062816

Electronic HID Ballasts ..... 3
Electronic Fluorescent Ballasts ..... 20
Electronic Fluorescent Sign Ballasts ..... 75
Magnetic HID Ballasts ..... 82
AC LED Drivers ..... 139
Constant Current LED Drivers ..... 141
Constant Voltage LED Drivers ..... 242
LED Emergency Drivers ..... 285
Programmable LED Drivers ..... 293
Surge Protectors ..... 314
Voltage Indicating Device ..... 318
Auto Transformers ..... 319
Electronic Transformers ..... 322
Landscape Transformers ..... 341
Magnetic Transformers ..... 342

# hatch

**Series**
## 20W Micro Slim
**Universal Voltage Models**

## ELECTRONIC HID BALLASTS

**Case Material: Polycarbonate**

| Input | |
|---|---|
| Nominal Voltage | Universal 120V to 277V |
| Frequency | 50/60Hz |
| Line Regulation | ± 5% output variation over full input range |
| Power Factor | > 0.95 |
| Total Harmonic Distortion | < 10% |

| Output | |
|---|---|
| Lamp Operating Frequency | 165Hz Square Wave |
| Lamp Current C.F. | <1.3 |

| Ordering Information | |
|---|---|
| Standard Case Quantity | 50 Units |
| Unit Weight/Case Weight | 0.54 lbs/29.5 lbs. |

## ELECTRICAL SPECIFICATIONS

| Watts | Hatch Part Number | Description | Lamp Types/ ANSI Codes | Voltage Range | Nominal Input Power | Input Current/ Input Voltage | Max. Remote Distance (ft) |
|---|---|---|---|---|---|---|---|
| 20 | MC20-1-F-UNNS | 20 Watt Universal Micro Slim w/Feet and Leads out Opposite Sides | M/C156 Ceramic MH | Wide Range Input 108-305VAC | 24 Watts | .20 Amps @ 120V<br>.12 Amps @ 208V<br>.10 Amps @ 240V<br>.09 Amps @ 277V | 25 |
| | MC20-1-T-UNNS | 20 Watt Universal Micro Slim Track w/o Feet w/Leads out Opposite Sides | | | | | |
| | MC20-1-F-UNNSL | 20 Watt Universal Micro Slim w/Feet and Leads out One Side | | | | | |
| | MC20-1-T-UNNSL *Not Shown | 20 Watt Universal Micro Slim Track w/o Feet w/Leads out One Side | | | | | |

## PRODUCT FEATURES :

- Thermal protection
- Approved for recessed use
- Micro Processor Controlled
  - Safety Shut Down Features
  - Superior Hot Lamp Restrike Characteristic
- Low Voltage Lamp Shutdown
- Sound Rated: A
- Minimum Starting Temperature: -30°C
- Maximum Case Temperature: 80°C
- Complies with FCC Part 18 (Class B) Consumer limits
- 5 Year Warranty
- Lamp end-of-life protected
- Transient Protection Meets ANSI/IEEE C62.41 Cat A
- Short Circuit Protection
- Open Circuit/No Lamp/ Hot Lamp Shutdown, Retry and Ignition Failure Protection:
  Ignition failure shutdown in 5 seconds followed by multiple timed restrikes with lamp ignition or timed shutdown until power is reset (restrike timing is lamp wattage dependent)

## APPROVALS:

c UL us LISTED — Type 1 Outdoor — RoHS COMPLIANT

## WIRING DIAGRAMS:

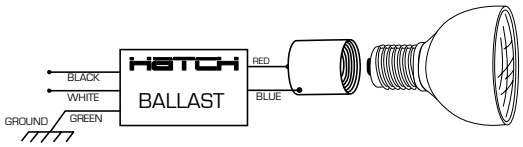


## MOUNTING DIAGRAM:

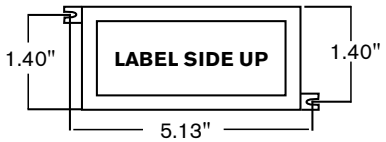


## CASE DIMENSIONS & MECHANICAL SPECIFICATIONS:

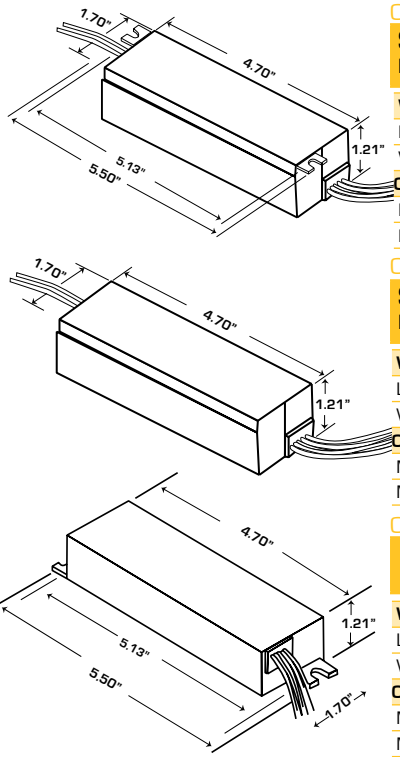


| CASE STYLE | MOUNTING |
|---|---|
| S - Micro Slim<br>Leads out opposite side | **F - With feet** |

| Wiring Information | |
|---|---|
| Lead Length : | Input: 10", Output : 8" |
| Wire Type : | Input: 18AWG, 105°C, 600V |
| **Operating Temperatures** | |
| Minimum Starting Temperature : | -30°C |
| Maximum Case Temperature : | 80°C |

| CASE STYLE | MOUNTING |
|---|---|
| S - Micro Slim<br>Leads out opposite side | **T - Track mount w/o feet** |

| Wiring Information | |
|---|---|
| Lead Length : | Input: 10", Output : 8" |
| Wire Type : | Input: 18AWG, 105°C, 600V |
| **Operating Temperatures** | |
| Minimum Starting Temperature : | -30°C |
| Maximum Case Temperature : | 80°C |

| CASE STYLE | MOUNTING |
|---|---|
| SL - Micro Slim<br>Leads out one side | **F - With feet** |

| Wiring Information | |
|---|---|
| Lead Length : | Input/Output : 8" |
| Wire Type : | Input: 18AWG, 105°C, 600V |
| **Operating Temperatures** | |
| Minimum Starting Temperature : | -30°C |
| Maximum Case Temperature : | 80°C |

## CASE STYLE SIZE CHART:

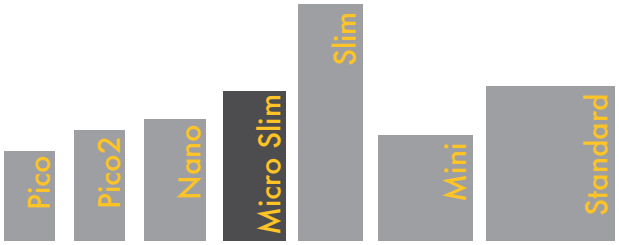


Each case style listed in the Size Chart represents a side lead model with no mounting feet. All HATCH E-HID Ballasts are available in several mounting and wiring configurations, each with slightly different dimensions from those listed in the chart.

# hatch

**Series**
**20W Mini**
**Universal Voltage Models**

## ELECTRONIC HID BALLASTS

**Case Material: Metal**

| Input | |
|---|---|
| Nominal Voltage | Universal 120V to 277V |
| Frequency | 50/60Hz |
| Line Regulation | ± 5% output variation over full input range |
| Power Factor | > 0.95 |
| Total Harmonic Distortion | < 10% |

| Output | |
|---|---|
| Lamp Operating Frequency | 165Hz Square Wave |
| Lamp Current C.F. | <1.3 |

| Ordering Information | |
|---|---|
| Standard Case Quantity | 50 Units |
| Unit Weight/Case Weight | 0.70 lbs/37.5 lbs. |

## ELECTRICAL SPECIFICATIONS

| Watts | Hatch Part Number | Description | Lamp Types/ ANSI Codes | Voltage Range | Nominal Input Power | Input Current/ Input Voltage | Max. Remote Distance (ft) |
|---|---|---|---|---|---|---|---|
| 20 | MC20-1-F-UNNU | 20 Watt Universal Mini w/Feet | M/C156 Ceramic MH | Wide Range Input 108-305VAC | 24 Watts | .20 Amps @ 120V<br>.12 Amps @ 208V<br>.10 Amps @ 240V<br>.09 Amps @ 277V | 25 |
| | MC20-1-J-UNNU | 20 Watt Universal Mini Bottom Feed w/Studs | | | | | |

## PRODUCT FEATURES :

- Thermal protection
- Approved for recessed use
- Micro Processor Controlled
  - Safety Shut Down Features
  - Superior Hot Lamp Restrike Characteristic
- Low Voltage Lamp Shutdown
- Sound Rated: A
- Minimum Starting Temperature: -30°C
- Maximum Case Temperature: 80°C
- Complies with FCC Part 18 (Class B) Consumer limits
- Up to 5 Year Warranty
- Lamp end-of-life protected

-Transient Protection Meets ANSI/IEEE C62.41 Cat A
- Short Circuit Protection
- Open Circuit/No Lamp/ Hot Lamp Shutdown, Retry and Ignition Failure Protection:
  Ignition failure shutdown in 5 seconds followed by multiple timed restrikes with lamp ignition or timed shutdown until power is reset (restrike timing is lamp wattage dependent)

## APPROVALS:

c UL us LISTED — Type 1 Outdoor — RoHS COMPLIANT

## WIRING DIAGRAMS:

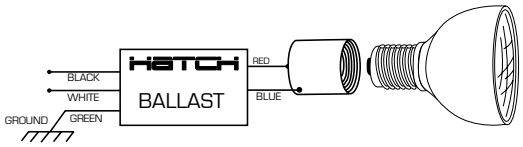


## MOUNTING DIAGRAM:

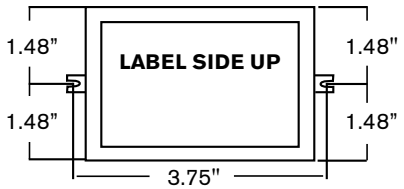


## CASE DIMENSIONS & MECHANICAL SPECIFICATIONS:

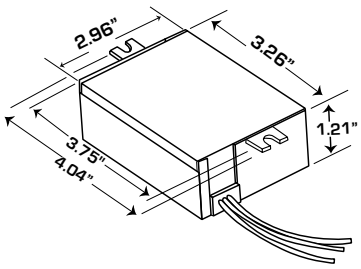


Center line to center line is .16" less than end to end on models with mounting feet.

| CASE STYLE | MOUNTING |
|---|---|
| U - Mini | F - With feet |

| Wiring Information | |
|---|---|
| Lead Length : | Input/Output : 8" |
| Wire Type : | Input: 18AWG, 105°C, 600V |
| **Operating Temperatures** | |
| Minimum Starting Temperature : | -30°C |
| Maximum Case Temperature : | 80°C |

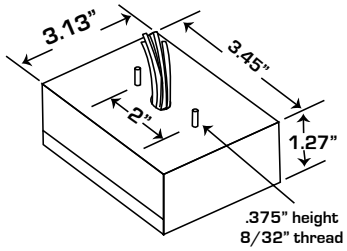


| CASE STYLE | MOUNTING |
|---|---|
| U - Mini | J - Bottom feed with studs |

| Wiring Information | |
|---|---|
| Lead Length : | Input/Output : 10" |
| Wire Type : | Input: 18AWG, 105°C, 600V |
| **Operating Temperatures** | |
| Minimum Starting Temperature : | -30°C |
| Maximum Case Temperature : | 80°C |

## CASE STYLE SIZE CHART:

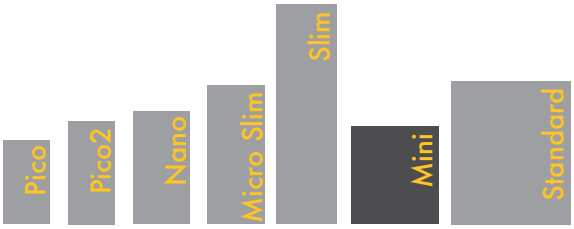


Each case style listed in the Size Chart represents a side lead model with no mounting feet. All HATCH E-HID Ballasts are available in several mounting and wiring configurations, each with slightly different dimensions from those listed in the chart.

# hatch

**Series**
## 20W Nano
**Dedicated Voltage Models**

## ELECTRONIC HID BALLASTS

**Case Material: Metal**

| Input | |
|---|---|
| Nominal Voltage | Dedicated 120V or 277V |
| Frequency | 50/60Hz |
| Line Regulation | ± 0.5% output variation over full input range |
| Power Factor | > 0.95 |
| Total Harmonic Distortion | < 10% |

| Output | |
|---|---|
| Lamp Operating Frequency | 165Hz Square Wave |
| Lamp Current C.F. | <1.3 |

| Ordering Information | |
|---|---|
| Standard Case Quantity | 50 Units |
| Unit Weight/Case Weight | 0.51 lbs/28 lbs |

## ELECTRICAL SPECIFICATIONS

| Watts | Hatch Part Number | Description | Lamp Types/ ANSI Codes | Voltage Range | Nominal Input Power | Input Current/ Input Voltage | Max. Remote Distance (ft) |
|---|---|---|---|---|---|---|---|
| 20 | MC20-1-F-120X | 20 Watt 120V Nano w/Feet | M156, SLi BriteSpot 20W | 120V ±10% AC Nominal 108-132V<br>277V ±10% AC Nominal 220-277V | 24 Watts | .20 Amps @ 120V<br>.12 Amps @ 208V<br>.10 Amps @ 240V<br>.09 Amps @ 277V | 25 |
| | MC20-1-F-277X | 20 Watt 277V Nano w/Feet | | | | | |
| | MC20-1-J-120X | 20 Watt 120V Nano Bottom Feed w/Studs | | | | | |
| | MC20-1-J-277X | 20 Watt 277V Nano Bottom Feed w/Studs | | | | | |

## PRODUCT FEATURES :

- Thermal protection
- Approved for recessed use
- Micro Processor Controlled
  - Safety Shut Down Features
  - Superior Hot Lamp Restrike Characteristic
- Low Voltage Lamp Shutdown
- Sound Rated: A
- Minimum Starting Temperature: -30°C
- Maximum Case Temperature: 80°C
- Complies with FCC Part 18 (Class B) Consumer limits
- Up to 5 Year Warranty
- Lamp end-of-life protected

-Transient Protection Meets ANSI/IEEE C62.41 Cat A
- Short Circuit Protection
- Open Circuit/No Lamp/ Hot Lamp Shutdown, Retry and Ignition Failure Protection:
  Ignition failure shutdown in 5 seconds followed by multiple timed restrikes with lamp ignition or timed shutdown until power is reset (restrike timing is lamp wattage dependent)

## APPROVALS:

c UL us LISTED — Type 1 Outdoor — RoHS COMPLIANT

## WIRING DIAGRAMS:

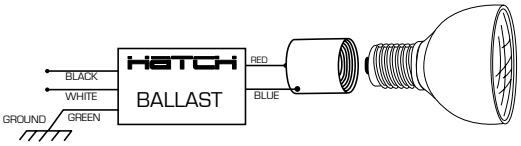


## MOUNTING DIAGRAM:

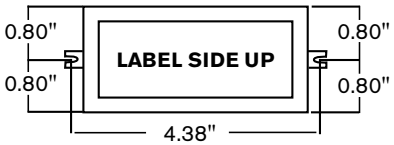


## CASE DIMENSIONS & MECHANICAL SPECIFICATIONS:

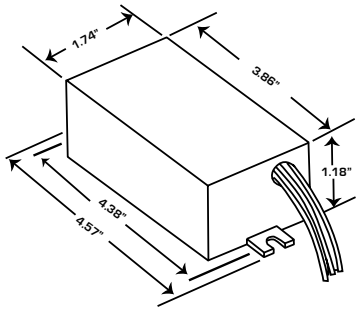


Center line to center line is .16" less than end to end on models with mounting feet.

CASE STYLE: X - Nano
MOUNTING: F - Side lead with feet

| Wiring Information | |
|---|---|
| Lead Length : | Input/Output : 8" |
| Wire Type : | Input: 18AWG, 105°C, 600V |
| **Operating Temperatures** | |
| Minimum Starting Temperature : | -30°C |
| Maximum Case Temperature : | 80°C |

* Available without feet, special order

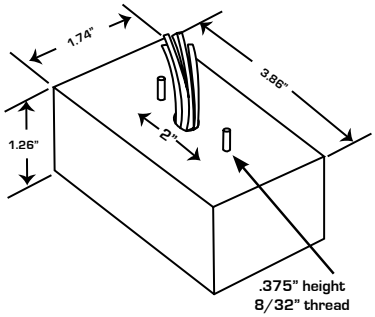


CASE STYLE: X - Nano
MOUNTING: J - Bottom feed with studs

| Wiring Information | |
|---|---|
| Lead Length : | Input/Output : 10" |
| Wire Type : | Input: 18AWG, 105°C, 600V |
| **Operating Temperatures** | |
| Minimum Starting Temperature : | -30°C |
| Maximum Case Temperature : | 80°C |

## CASE STYLE SIZE CHART:

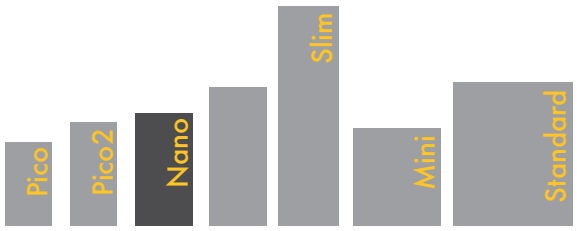


Each case style listed in the Size Chart represents a side lead model with no mounting feet. All HATCH E-HID Ballasts are available in several mounting and wiring configurations, each with slightly different dimensions from those listed in the chart.

# hatch

**Series**
## 20W Pico
**Dedicated Voltage Models**

## ELECTRONIC HID BALLASTS

**Case Material: Plastic**

| Input | |
|---|---|
| Nominal Voltage | Dedicated 120V |
| Frequency | 50/60Hz |
| Line Regulation | ± 5% output variation over full input range |
| Power Factor | > 0.95 |
| Total Harmonic Distortion | < 10% |

| Output | |
|---|---|
| Lamp Operating Frequency | 165Hz Square Wave |
| Lamp Current C.F. | <1.3 |

| Ordering Information | |
|---|---|
| Standard Case Quantity | 50 Units |
| Unit Weight/Case Weight | 0.20 lbs/12.5 lbs. |

## ELECTRICAL SPECIFICATIONS

| Watts | Hatch Part Number | Description | Lamp Types/ ANSI Codes | Voltage Range | Nominal Input Power | Input Current/ Input Voltage | Max. Remote Distance (ft) |
|---|---|---|---|---|---|---|---|
| 20 | MC20-1-F-120Z | 20 Watt 120V Pico w/Feet | M/C156 Ceramic MH | 120V AC Nominal 108-132V | 24 Watts | .20 Amps @ 120V | 10 |
| | MC20-1-T-120Z | 20 Watt 120V Pico Track w/o Feet | | | | | |

## PRODUCT FEATURES :

- Thermal protection
- Approved for recessed use
- Micro Processor Controlled
  - Safety Shut Down Features
  - Superior Hot Lamp Restrike Characteristic
- Low Voltage Lamp Shutdown
- Sound Rated: A
- Minimum Starting Temperature: -30°C
- Maximum Case Temperature: 80°C
- Complies with FCC Part 18 (Class B) Consumer limits
- Up to 5 Year Warranty
- Lamp end-of-life protected

-Transient Protection Meets ANSI/IEEE C62.41 Cat A
- Short Circuit Protection
- Open Circuit/No Lamp/ Hot Lamp Shutdown, Retry and Ignition Failure Protection:
  Ignition failure shutdown in 5 seconds followed by multiple timed restrikes with lamp ignition or timed shutdown until power is reset (restrike timing is lamp wattage dependent)

## APPROVALS:

c UL us LISTED — Type 1 Outdoor — RoHS COMPLIANT

## WIRING DIAGRAMS:

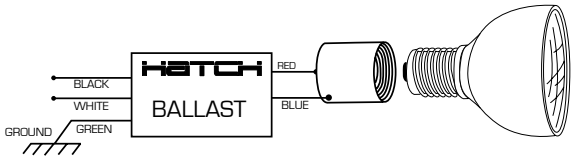


## MOUNTING DIAGRAM:

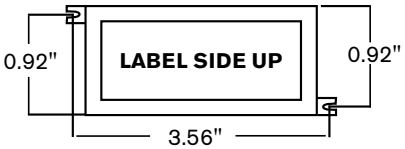


## CASE DIMENSIONS & MECHANICAL SPECIFICATIONS:

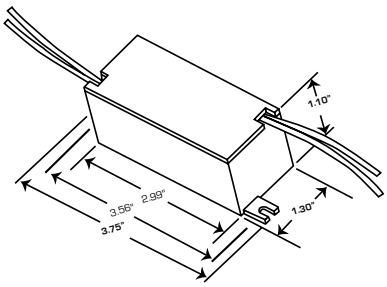


| CASE STYLE | MOUNTING |
|---|---|
| Z - Pico Slim | F - With feet |

| Wiring Information | |
|---|---|
| Lead Length : | Input/Output : 6.5" |
| Wire Type : | Input: 18AWG, 105°C, 600V |
| **Operating Temperatures** | |
| Minimum Starting Temperature : | -30°C |
| Maximum Case Temperature : | 80°C |

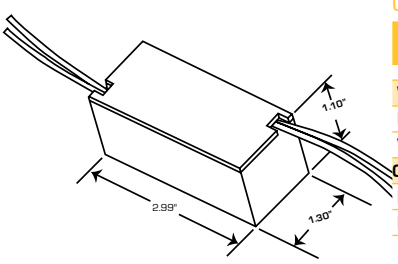


| CASE STYLE | MOUNTING |
|---|---|
| Z - Pico Slim | T - Track mount w/o feet |

| Wiring Information | |
|---|---|
| Lead Length : | Input/Output : 6.5" |
| Wire Type : | Input: 18AWG, 105°C, 600V |
| **Operating Temperatures** | |
| Minimum Starting Temperature : | -30°C |
| Maximum Case Temperature : | 80°C |

## CASE STYLE SIZE CHART:

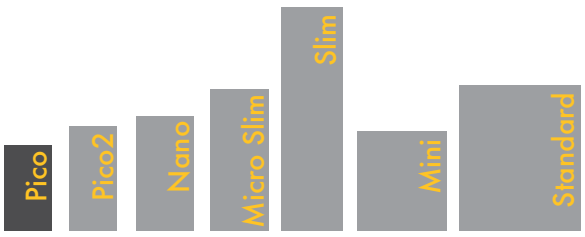


Each case style listed in the Size Chart represents a side lead model with no mounting feet. All HATCH E-HID Ballasts are available in several mounting and wiring configurations, each with slightly different dimensions from those listed in the chart.

# hatch

**Series**
## 22W Mini
**Universal Low Ignition Voltage Models**

## ELECTRONIC HID BALLASTS

**Case Material: Metal**

| Input | |
|---|---|
| Nominal Voltage | Universal 120V to 277V |
| Frequency | 50/60Hz |
| Line Regulation | ± 5% output variation over full input range |
| Power Factor | > 0.95 |
| Total Harmonic Distortion | < 10% |

| Output | |
|---|---|
| Lamp Operating Frequency | 165Hz Square Wave |
| Lamp Current C.F. | <1.3 |

| Ordering Information | |
|---|---|
| Standard Case Quantity | 50 Units |
| Unit Weight/Case Weight | 0.70 lbs/37.5 lbs |

## ELECTRICAL SPECIFICATIONS

| Watts | Hatch Part Number | Description | Lamp Types/ANSI Codes | Voltage Range | Nominal Input Power | Input Current/ Input Voltage | Max. Remote Distance (ft) |
|---|---|---|---|---|---|---|---|
| 22 | MC22-1-F-UNLU | 22 Watt Universal Mini Low Strike w/Feet | Phillips – CDM-TM C175E | Wide Range Input 108-305VAC | 26 Watts | .22 Amps @ 120V<br>.13 Amps @ 208V<br>.11 Amps @ 240V<br>.10 Amps @ 277V | 25 |
| | MC22-1-J-UNLU | 22 Watt Universal Mini Low Strike Bottom Feed w/Studs | | | | | |

## PRODUCT FEATURES :

- Thermal protection
- Approved for recessed use
- Micro Processor Controlled
  - Safety Shut Down Features
  - Superior Hot Lamp Restrike Characteristic
- Low Voltage Lamp Shutdown
- Sound Rated: A
- Minimum Starting Temperature: -30°C
- Maximum Case Temperature: 80°C
- Complies with FCC Part 18 (Class B) Consumer limits
- Up to 5 Year Warranty
- Lamp end-of-life protected

-Transient Protection Meets ANSI/IEEE C62.41 Cat A
- Short Circuit Protection
- Open Circuit/No Lamp/ Hot Lamp Shutdown, Retry and Ignition Failure Protection:
  Ignition failure shutdown in 5 seconds followed by multiple timed restrikes with lamp ignition or timed shutdown until power is reset (restrike timing is lamp wattage dependent)

## APPROVALS:

c UL us LISTED — Type 1 Outdoor — RoHS COMPLIANT

## WIRING DIAGRAMS:

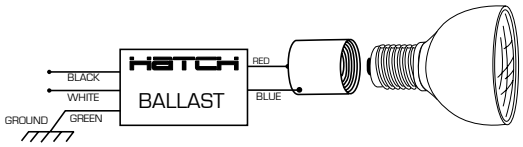


## MOUNTING DIAGRAM:

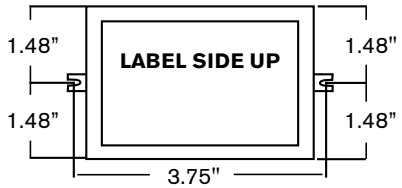


## CASE DIMENSIONS & MECHANICAL SPECIFICATIONS:

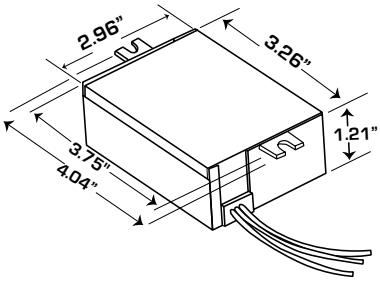


Center line to center line is .16" less than end to end on models with mounting feet.

| CASE STYLE | MOUNTING |
|---|---|
| U - Mini | F - With feet |

| Wiring Information | |
|---|---|
| Lead Length : | Input/Output : 8" |
| Wire Type : | Input: 18AWG, 105°C, 600V |
| **Operating Temperatures** | |
| Minimum Starting Temperature : | -30°C |
| Maximum Case Temperature : | 80°C |

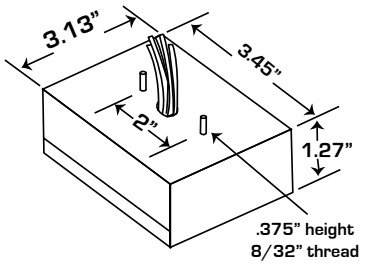


| CASE STYLE | MOUNTING |
|---|---|
| U - Mini | J - Bottom feed with studs |

| Wiring Information | |
|---|---|
| Lead Length : | Input/Output : 10" |
| Wire Type : | Input: 18AWG, 105°C, 600V |
| **Operating Temperatures** | |
| Minimum Starting Temperature : | -30°C |
| Maximum Case Temperature : | 80°C |

## CASE STYLE SIZE CHART:

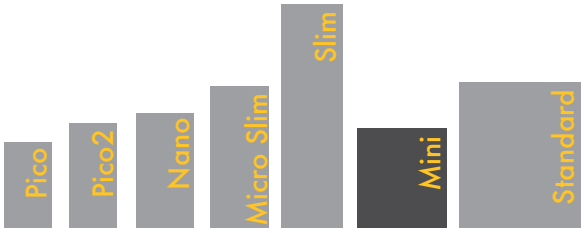


Each case style listed in the Size Chart represents a side lead model with no mounting feet. All HATCH E-HID Ballasts are available in several mounting and wiring configurations, each with slightly different dimensions from those listed in the chart.

# hatch

**Series**
## 22W Nano
**Dedicated Low Ignition Voltage Models**

## ELECTRONIC HID BALLASTS

**Case Material: Metal**

| Input | |
|---|---|
| Nominal Voltage | Dedicated 120V or 277V |
| Frequency | 50/60Hz |
| Line Regulation | ± 5% output variation over full input range |
| Power Factor | > 0.95 |
| Total Harmonic Distortion | < 10% |

| Output | |
|---|---|
| Lamp Operating Frequency | 155Hz Square Wave |
| Lamp Current C.F. | <1.3 |

| Ordering Information | |
|---|---|
| Standard Case Quantity | 50 Units |
| Unit Weight/Case Weight | 0.51 lbs/28 lbs |

## ELECTRICAL SPECIFICATIONS

| Watts | Hatch Part Number | Description | Lamp Types/ ANSI Codes | Voltage Range | Nominal Input Power | Input Current/ Input Voltage | Max. Remote Distance (ft) |
|---|---|---|---|---|---|---|---|
| 22 | MC22-1-F-12LX | 22 Watt 120V Nano w/Feet Low Strike | Phillips – CDM-TM 20W/830* C175E | 120V ±10% AC Nominal 108-132V<br>277V ±10% AC Nominal 185-305V | 26 Watts | .22 Amps @ 120V<br>.13 Amps @ 208V<br>.11 Amps @ 240V<br>.10 Amps @ 277V | 10 |
| | MC22-1-F-27LX | 22 Watt 277V Nano w/Feet Low Strike | | | | | |
| | MC22-1-J-12LX | 22 Watt 120V Nano Bottom Feed Low Strike w/Studs | | | | | |
| | MC22-1-J-27LX | 22 Watt 277V Nano Bottom Feed Low Strike w/Studs | | | | | |

## PRODUCT FEATURES :

- Thermal protection
- Approved for recessed use
- Micro Processor Controlled
  - Safety Shut Down Features
  - Superior Hot Lamp Restrike Characteristic
- Low Voltage Lamp Shutdown
- Sound Rated: A
- Minimum Starting Temperature: -30°C
- Maximum Case Temperature: 80°C
- Complies with FCC Part 18 (Class B) Consumer limits
- Up to 5 Year Warranty
- Lamp end-of-life protected

-Transient Protection Meets ANSI/IEEE C62.41 Cat A
- Short Circuit Protection
- Open Circuit/No Lamp/ Hot Lamp Shutdown, Retry and Ignition Failure Protection:
  Ignition failure shutdown in 5 seconds followed by multiple timed restrikes with lamp ignition or timed shutdown until power is reset (restrike timing is lamp wattage dependent)

## APPROVALS:

c UL us LISTED — Type 1 Outdoor — RoHS COMPLIANT

## WIRING DIAGRAMS:

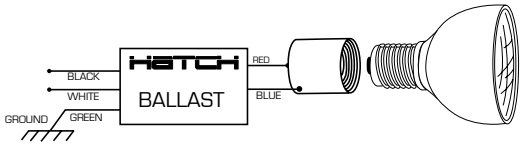


## MOUNTING DIAGRAM:

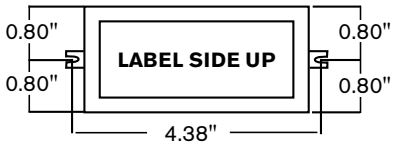


## CASE DIMENSIONS & MECHANICAL SPECIFICATIONS:

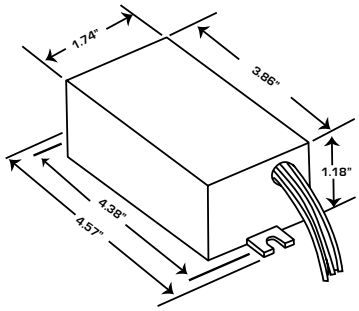


Center line to center line is .16" less than end to end on models with mounting feet.

CASE STYLE: X - Nano — MOUNTING: F - Side lead with feet

| Wiring Information | |
|---|---|
| Lead Length : | Input/Output : 8" |
| Wire Type : | Input: 18AWG, 105°C, 600V |
| **Operating Temperatures** | |
| Minimum Starting Temperature : | -30°C |
| Maximum Case Temperature : | 80°C |

* Available without feet, special order

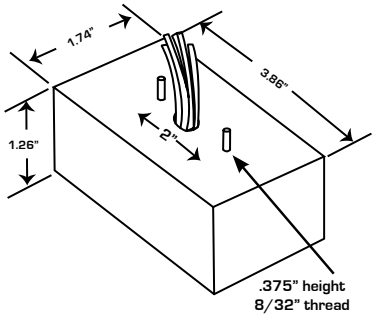


CASE STYLE: X - Nano — MOUNTING: J - Bottom feed with studs

| Wiring Information | |
|---|---|
| Lead Length : | Input/Output : 10" |
| Wire Type : | Input: 18AWG, 105°C, 600V |
| **Operating Temperatures** | |
| Minimum Starting Temperature : | -30°C |
| Maximum Case Temperature : | 80°C |

## CASE STYLE SIZE CHART:

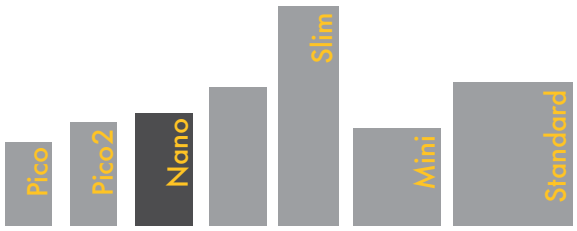


Each case style listed in the Size Chart represents a side lead model with no mounting feet. All HATCH E-HID Ballasts are available in several mounting and wiring configurations, each with slightly different dimensions from those listed in the chart.

# hatch

**Series**
## 39W Micro Slim
**Universal Voltage Models**

## ELECTRONIC HID BALLASTS

**Case Material: Polycarbonate**

| Input | |
|---|---|
| Nominal Voltage | Universal 120V to 277V |
| Frequency | 50/60Hz |
| Line Regulation | ± 5% output variation over full input range |
| Power Factor | > 0.95 |
| Total Harmonic Distortion | < 10% |

| Output | |
|---|---|
| Lamp Operating Frequency | 165Hz Square Wave |
| Lamp Current C.F. | <1.3 |

| Ordering Information | |
|---|---|
| Standard Case Quantity | 50 Units |
| Unit Weight/Case Weight | 0.54 lbs/29.5 lbs. |

## ELECTRICAL SPECIFICATIONS

| Watts | Hatch Part Number | Description | Lamp Types/ ANSI Codes | Voltage Range | Nominal Input Power | Input Current/ Input Voltage | Max. Remote Distance (ft) |
|---|---|---|---|---|---|---|---|
| 39 | MC39-1-F-UNNS | 39 Watt Universal Micro Slim w/Feet and Leads out Opposite Sides | M/C130 Ceramic MH | Wide Range Input 108-305VAC | 44 Watts | .37 Amps @ 120V<br>.22 Amps @ 208V<br>.19 Amps @ 240V<br>.16 Amps @ 277V | 25 |
| | MC39-1-T-UNNS | 39 Watt Universal Micro Slim Track w/Leads out Opposite Sides | | | | | |
| | MC39-1-F-UNNSL | 39 Watt Universal Micro Slim w/Feet and Leads out One Side | | | | | |
| | MC39-1-T-UNNSL * Not Shown | 39 Watt Universal Micro Slim Track w/Leads out One Side | | | | | |

## PRODUCT FEATURES :

- Thermal protection
- Approved for recessed use
- Micro Processor Controlled
  - Safety Shut Down Features
  - Superior Hot Lamp Restrike Characteristic
- Low Voltage Lamp Shutdown
- Sound Rated: A
- Minimum Starting Temperature: -30°C
- Maximum Case Temperature: 80°C
- Complies with FCC Part 18 (Class B) Consumer limits
- Up to 5 Year Warranty
- Lamp end-of-life protected

-Transient Protection Meets ANSI/IEEE C62.41 Cat A
- Short Circuit Protection
- Open Circuit/No Lamp/ Hot Lamp Shutdown, Retry and Ignition Failure Protection:
  Ignition failure shutdown in 5 seconds followed by multiple timed restrikes with lamp ignition or timed shutdown until power is reset (restrike timing is lamp wattage dependent)

## APPROVALS:

c UL us LISTED — Type 1 Outdoor — RoHS COMPLIANT

## WIRING DIAGRAMS:

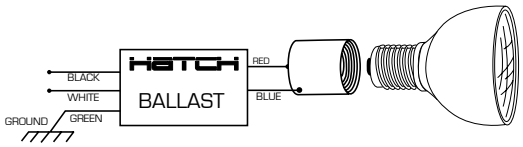


## MOUNTING DIAGRAM:

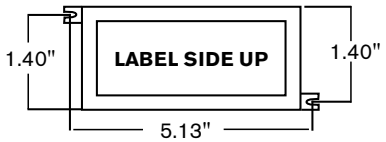


## CASE DIMENSIONS & MECHANICAL SPECIFICATIONS:

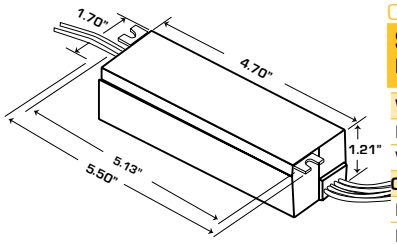


| CASE STYLE | MOUNTING |
|---|---|
| S - Micro Slim<br>Leads out opposite side | **F - With feet** |

| Wiring Information | |
|---|---|
| Lead Length : | Input: 10", Output : 8" |
| Wire Type : | Input: 18AWG, 105°C, 600V |
| **Operating Temperatures** | |
| Minimum Starting Temperature : | -30°C |
| Maximum Case Temperature : | 80°C |

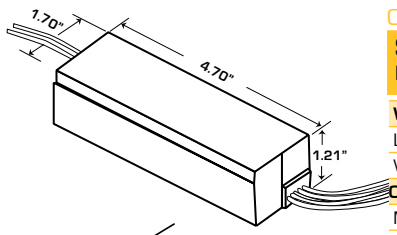


| CASE STYLE | MOUNTING |
|---|---|
| S - Micro Slim<br>Leads out opposite side | **T - Track mount w/o feet** |

| Wiring Information | |
|---|---|
| Lead Length : | Input: 10", Output : 8" |
| Wire Type : | Input: 18AWG, 105°C, 600V |
| **Operating Temperatures** | |
| Minimum Starting Temperature : | -30°C |
| Maximum Case Temperature : | 80°C |

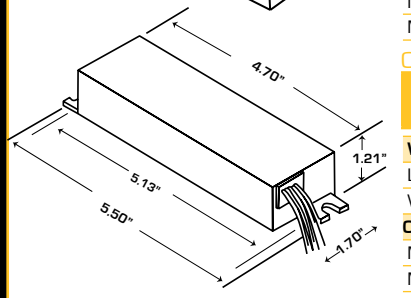


| CASE STYLE | MOUNTING |
|---|---|
| SL - Micro Slim<br>Leads out one side | **F - With feet** |

| Wiring Information | |
|---|---|
| Lead Length : | Input/Output : 8" |
| Wire Type : | Input: 18AWG, 105°C, 600V |
| **Operating Temperatures** | |
| Minimum Starting Temperature : | -30°C |
| Maximum Case Temperature : | 80°C |

## CASE STYLE SIZE CHART:

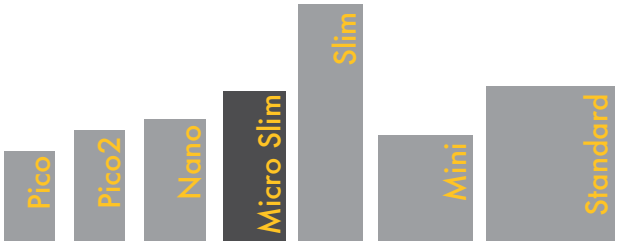


Each case style listed in the Size Chart represents a side lead model with no mounting feet. All HATCH E-HID Ballasts are available in several mounting and wiring configurations, each with slightly different dimensions from those listed in the chart.

# hatch

**Series**
**39W Mini**
**Universal Voltage Models**

## ELECTRONIC HID BALLASTS

**Case Material: Metal**

| Input | |
|---|---|
| Nominal Voltage | Universal 120V to 277V |
| Frequency | 50/60Hz |
| Line Regulation | ± 5% output variation over full input range |
| Power Factor | > 0.95 |
| Total Harmonic Distortion | < 10% |

| Output | |
|---|---|
| Lamp Operating Frequency | 165Hz Square Wave |
| Lamp Current C.F. | <1.3 |

| Ordering Information | |
|---|---|
| Standard Case Quantity | 50 Units |
| Unit Weight/Case Weight | 0.51 lbs/28 lbs |

## ELECTRICAL SPECIFICATIONS

| Watts | Hatch Part Number | Description | Lamp Types/ANSI Codes | Voltage Range | Nominal Input Power | Input Current/ Input Voltage | Max. Remote Distance (ft) |
|---|---|---|---|---|---|---|---|
| 39 | MC39-1-F-UNNU | 39 Watt Universal Mini w/Feet | M130 Ceramic MH | Wide Range Input 108-305VAC | 44 Watts | .37 Amps @ 120V<br>.22 Amps @ 208V<br>.19 Amps @ 240V<br>.16 Amps @ 277V | 25 |
| | MC39-1-J-UNNU | 39 Watt Universal Mini Bottom Feed w/Studs | | | | | |

## PRODUCT FEATURES :

- Thermal protection
- Approved for recessed use
- Micro Processor Controlled
  - Safety Shut Down Features
  - Superior Hot Lamp Restrike Characteristic
- Low Voltage Lamp Shutdown
- Sound Rated: A
- Minimum Starting Temperature: -30°C
- Maximum Case Temperature: 80°C
- Complies with FCC Part 18 (Class B) Consumer limits
- Up to 5 Year Warranty
- Lamp end-of-life protected

-Transient Protection Meets ANSI/IEEE C62.41 Cat A
- Short Circuit Protection
- Open Circuit/No Lamp/ Hot Lamp Shutdown, Retry and Ignition Failure Protection:
  Ignition failure shutdown in 5 seconds followed by multiple timed restrikes with lamp ignition or timed shutdown until power is reset (restrike timing is lamp wattage dependent)

## APPROVALS:

c UL us LISTED — Type 1 Outdoor — RoHS COMPLIANT

## WIRING DIAGRAMS:

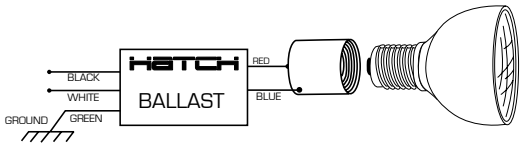


## MOUNTING DIAGRAM:

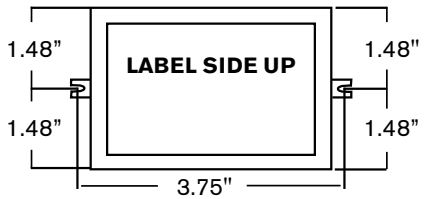


## CASE DIMENSIONS & MECHANICAL SPECIFICATIONS:

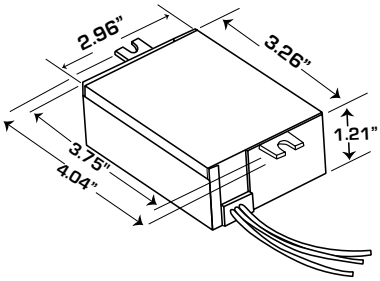


Center line to center line is .16" less than end to end on models with mounting feet.

| CASE STYLE | MOUNTING |
|---|---|
| U - Mini | F - With feet |

| Wiring Information | |
|---|---|
| Lead Length : | Input/Output : 8" |
| Wire Type : | Input: 18AWG, 105°C, 600V |
| **Operating Temperatures** | |
| Minimum Starting Temperature : | -30°C |
| Maximum Case Temperature : | 80°C |

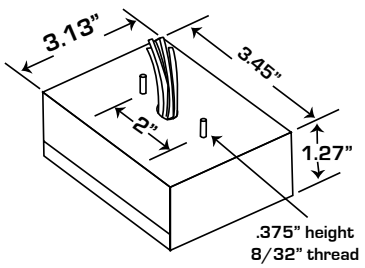


| CASE STYLE | MOUNTING |
|---|---|
| U - Mini | J - Bottom feed with studs |

| Wiring Information | |
|---|---|
| Lead Length : | Input/Output : 10" |
| Wire Type : | Input: 18AWG, 105°C, 600V |
| **Operating Temperatures** | |
| Minimum Starting Temperature : | -30°C |
| Maximum Case Temperature : | 80°C |

## CASE STYLE SIZE CHART:

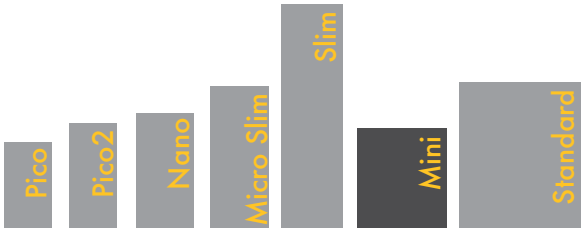


Each case style listed in the Size Chart represents a side lead model with no mounting feet. All HATCH E-HID Ballasts are available in several mounting and wiring configurations, each with slightly different dimensions from those listed in the chart.

# hatch

**Series**
## 39W Mini
**Universal Low Ignition Voltage Models**

## ELECTRONIC HID BALLASTS

**Case Material: Metal**

| Input | |
|---|---|
| Nominal Voltage | Universal 120V to 277V |
| Frequency | 50/60Hz |
| Line Regulation | ± 5% output variation over full input range |
| Power Factor | > 0.95 |
| Total Harmonic Distortion | < 10% |

| Output | |
|---|---|
| Lamp Operating Frequency | 165Hz Square Wave |
| Lamp Current C.F. | <1.3 |

| Ordering Information | |
|---|---|
| Standard Case Quantity | 50 Units |
| Unit Weight/Case Weight | 0.51 lbs/28 lbs |

## ELECTRICAL SPECIFICATIONS

| Watts | Hatch Part Number | Description | Lamp Types/ANSI Codes | Voltage Range | Nominal Input Power | Input Current/ Input Voltage | Max. Remote Distance (ft) |
|---|---|---|---|---|---|---|---|
| 39 | MC39-1-F-UNLU | 39 Watt Universal Mini Low Strike w/Feet | Phillips – CDM-TM 35W/830 C179E | Wide Range Input 108-305VAC | 44 Watts | .37 Amps @ 120V<br>.22 Amps @ 208V<br>.19 Amps @ 240V<br>.16 Amps @ 277V | 25 |
| | MC39-1-J-UNLU | 39 Watt Universal Mini Low Strike Bottom Feed w/Studs | | | | | |

## PRODUCT FEATURES :

- Thermal protection
- Approved for recessed use
- Micro Processor Controlled
  - Safety Shut Down Features
  - Superior Hot Lamp Restrike Characteristic
- Low Voltage Lamp Shutdown
- Sound Rated: A
- Minimum Starting Temperature: -30°C
- Maximum Case Temperature: 80°C
- Complies with FCC Part 18 (Class B) Consumer limits
- Up to 5 Year Warranty
- Lamp end-of-life protected

-Transient Protection Meets ANSI/IEEE C62.41 Cat A
- Short Circuit Protection
- Open Circuit/No Lamp/ Hot Lamp Shutdown, Retry and Ignition Failure Protection:
  Ignition failure shutdown in 5 seconds followed by multiple timed restrikes with lamp ignition or timed shutdown until power is reset (restrike timing is lamp wattage dependent)

## APPROVALS:

c UL us LISTED — Type 1 Outdoor — RoHS COMPLIANT

## WIRING DIAGRAMS:

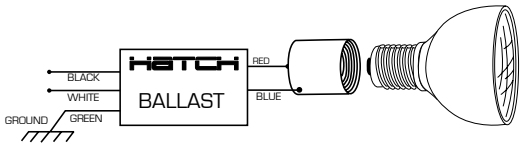


## MOUNTING DIAGRAM:

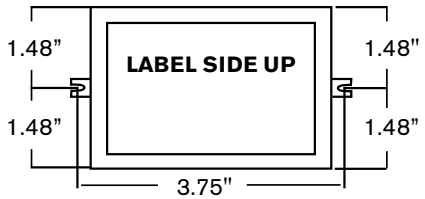


## CASE DIMENSIONS & MECHANICAL SPECIFICATIONS:

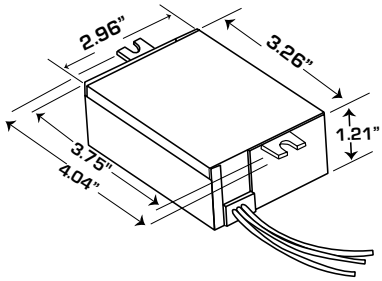


Center line to center line is .16" less than end to end on models with mounting feet.

| CASE STYLE | MOUNTING |
|---|---|
| U - Mini | F - With feet |

| Wiring Information | |
|---|---|
| Lead Length : | Input/Output : 8" |
| Wire Type : | Input: 18AWG, 105°C, 600V |
| **Operating Temperatures** | |
| Minimum Starting Temperature : | -30°C |
| Maximum Case Temperature : | 80°C |

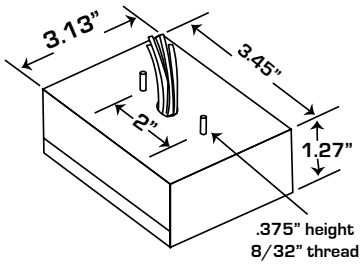


| CASE STYLE | MOUNTING |
|---|---|
| U - Mini | J - Bottom feed with studs |

| Wiring Information | |
|---|---|
| Lead Length : | Input/Output : 10" |
| Wire Type : | Input: 18AWG, 105°C, 600V |
| **Operating Temperatures** | |
| Minimum Starting Temperature : | -30°C |
| Maximum Case Temperature : | 80°C |

## CASE STYLE SIZE CHART:

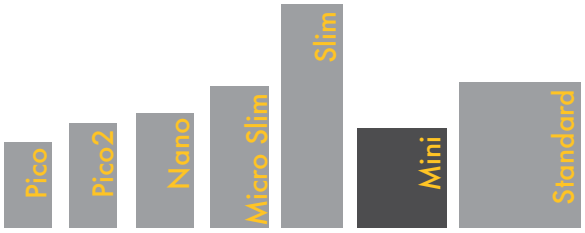


Each case style listed in the Size Chart represents a side lead model with no mounting feet. All HATCH E-HID Ballasts are available in several mounting and wiring configurations, each with slightly different dimensions from those listed in the chart.

# hatch

**Series**
**39W Nano**
**Dedicated Voltage Models**

## ELECTRONIC HID BALLASTS

**Case Material: Metal**

| Input | |
|---|---|
| Nominal Voltage | Dedicated 120V or 277V |
| Frequency | 50/60Hz |
| Line Regulation | ± 5% output variation over full input range |
| Power Factor | > 0.95 |
| Total Harmonic Distortion | < 10% |

| Output | |
|---|---|
| Lamp Operating Frequency | 165Hz Square Wave |
| Lamp Current C.F. | <1.3 |

| Ordering Information | |
|---|---|
| Standard Case Quantity | 50 Units |
| Unit Weight/Case Weight | 0.51 lbs/28 lbs |

## ELECTRICAL SPECIFICATIONS

| Watts | Hatch Part Number | Description | Lamp Types/ ANSI Codes | Voltage Range | Nominal Input Power | Input Current/ Input Voltage | Max. Remote Distance (ft) |
|---|---|---|---|---|---|---|---|
| 39 | MC39-1-F-120X | 39 Watt 120V Nano w/Feet | M130 Ceramic | 120V AC Nominal 108-132V<br>277V AC Nominal 185-305V | 44 Watts | .37 Amps @ 120V<br>.22 Amps @ 208V<br>.19 Amps @ 240V<br>.16 Amps @ 277V | 25 |
| | MC39-1-F-277X | 39 Watt 277V Nano w/Feet | | | | | |
| | MC39-1-J-120X | 39 Watt 120V Nano Bottom Feed w/Studs | | | | | |
| | MC39-1-J-277X | 39 Watt 277V Nano Bottom Feed w/Studs | | | | | |

## PRODUCT FEATURES :

- Thermal protection
- Approved for recessed use
- Micro Processor Controlled
  - Safety Shut Down Features
  - Superior Hot Lamp Restrike Characteristic
- Low Voltage Lamp Shutdown
- Sound Rated: A
- Minimum Starting Temperature: -30°C
- Maximum Case Temperature: 80°C
- Complies with FCC Part 18 (Class B) Consumer limits
- Up to 5 Year Warranty
- Lamp end-of-life protected

-Transient Protection Meets ANSI/IEEE C62.41 Cat A
- Short Circuit Protection
- Open Circuit/No Lamp/ Hot Lamp Shutdown, Retry and Ignition Failure Protection:
  Ignition failure shutdown in 5 seconds followed by multiple timed restrikes with lamp ignition or timed shutdown until power is reset (restrike timing is lamp wattage dependent)

## APPROVALS:

c UL us LISTED — Type 1 Outdoor — RoHS COMPLIANT

## WIRING DIAGRAMS:

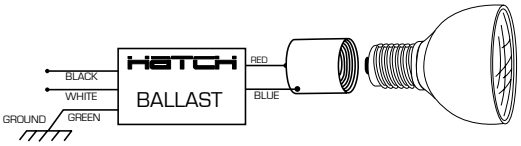


## MOUNTING DIAGRAM:

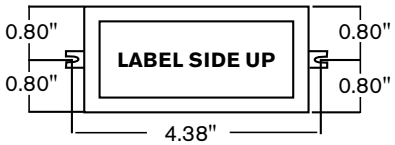


## CASE DIMENSIONS & MECHANICAL SPECIFICATIONS:

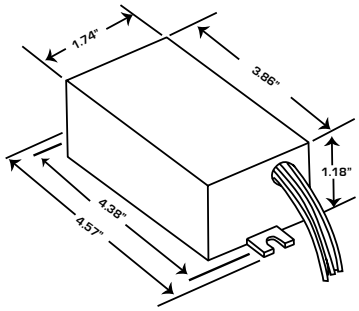


Center line to center line is .16" less than end to end on models with mounting feet.

CASE STYLE: X - Nano
MOUNTING: F - Side lead with feet

| Wiring Information | |
|---|---|
| Lead Length : | Input/Output : 8" |
| Wire Type : | Input: 18AWG, 105°C, 600V |
| **Operating Temperatures** | |
| Minimum Starting Temperature : | -30°C |
| Maximum Case Temperature : | 80°C |

* Available without feet, special order

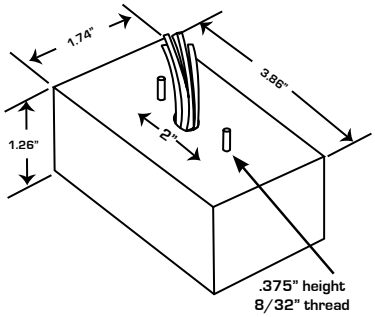


CASE STYLE: X - Nano
MOUNTING: J - Bottom feed with studs

| Wiring Information | |
|---|---|
| Lead Length : | Input/Output : 10" |
| Wire Type : | Input: 18AWG, 105°C, 600V |
| **Operating Temperatures** | |
| Minimum Starting Temperature : | -30°C |
| Maximum Case Temperature : | 80°C |

## CASE STYLE SIZE CHART:

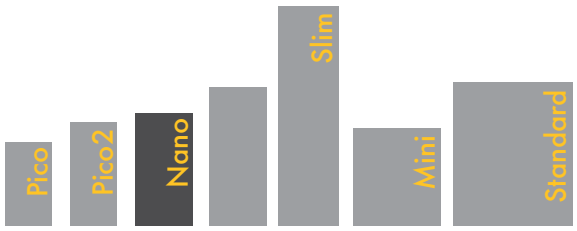


Each case style listed in the Size Chart represents a side lead model with no mounting feet. All HATCH E-HID Ballasts are available in several mounting and wiring configurations, each with slightly different dimensions from those listed in the chart.

# hatch

**Series**
## 39W Nano
**Dedicated Low Ignition Voltage Models**

## ELECTRONIC HID BALLASTS

**Case Material: Metal**

| Input | |
|---|---|
| Nominal Voltage | Dedicated 120V or 277V |
| Frequency | 50/60Hz |
| Line Regulation | ± 5% output variation over full input range |
| Power Factor | > 0.95 |
| Total Harmonic Distortion | < 10% |

| Output | |
|---|---|
| Lamp Operating Frequency | 165Hz Square Wave |
| Lamp Current C.F. | <1.3 |

| Ordering Information | |
|---|---|
| Standard Case Quantity | 50 Units |
| Unit Weight/Case Weight | 0.51 lbs/28 lbs |

## ELECTRICAL SPECIFICATIONS

| Watts | Hatch Part Number | Description | Lamp Types/ ANSI Codes | Voltage Range | Nominal Input Power | Input Current/ Input Voltage | Max. Remote Distance (ft) |
|---|---|---|---|---|---|---|---|
| 39 | MC39-1-F-12LX | 39 Watt 120V Nano w/Feet Low Strike | Phillips – CDM-TM 35W/830* C179E<br>* Call for approval | 120V AC Nominal 108-132V<br>277V AC Nominal 220-277V | 44 Watts | .20 Amps @ 120V<br>.12 Amps @ 208V<br>.10 Amps @ 240V<br>.09 Amps @ 277V | 25 |
| | MC39-1-F-27LX | 39 Watt 277V Nano w/Feet Low Strike | | | | | |
| | MC39-1-J-12LX | 39 Watt 120V Nano Bottom Feed Low Strike w/Studs | | | | | |
| | MC39-1-J-27LX | 39 Watt 277V Nano Bottom Feed Low Strike w/Studs | | | | | |

## PRODUCT FEATURES :

- Thermal protection
- Approved for recessed use
- Micro Processor Controlled
  - Safety Shut Down Features
  - Superior Hot Lamp Restrike Characteristic
- Low Voltage Lamp Shutdown
- Sound Rated: A
- Minimum Starting Temperature: -30°C
- Maximum Case Temperature: 80°C
- Complies with FCC Part 18 (Class B) Consumer limits
- Up to 5 Year Warranty
- Lamp end-of-life protected
- -Transient Protection Meets ANSI/IEEE C62.41 Cat A
- Short Circuit Protection
- Open Circuit/No Lamp/ Hot Lamp Shutdown, Retry and Ignition Failure Protection:
  Ignition failure shutdown in 5 seconds followed by multiple timed restrikes with lamp ignition or timed shutdown until power is reset (restrike timing is lamp wattage dependent)

### APPROVALS:

c UL us LISTED — Type 1 Outdoor — RoHS COMPLIANT

## WIRING DIAGRAMS:

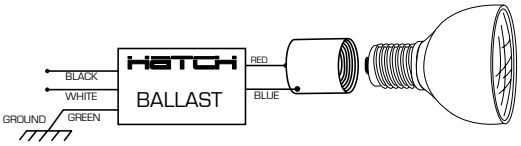


## MOUNTING DIAGRAM:

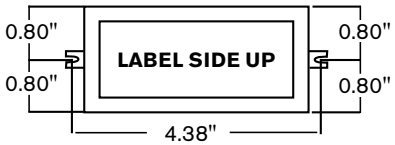


## CASE DIMENSIONS & MECHANICAL SPECIFICATIONS:

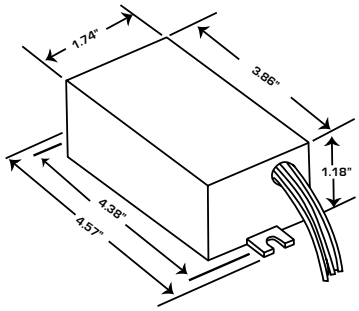


Center line to center line is .16" less than end to end on models with mounting feet.

CASE STYLE: X - Nano — MOUNTING: F - Side lead with feet

| Wiring Information | |
|---|---|
| Lead Length : | Input/Output : 8" |
| Wire Type : | Input: 18AWG, 105°C, 600V |
| **Operating Temperatures** | |
| Minimum Starting Temperature : | -30°C |
| Maximum Case Temperature : | 80°C |

* Available without feet, special order

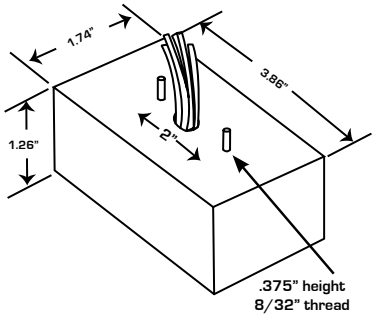


CASE STYLE: X - Nano — MOUNTING: J - Bottom feed with studs

| Wiring Information | |
|---|---|
| Lead Length : | Input/Output : 10" |
| Wire Type : | Input: 18AWG, 105°C, 600V |
| **Operating Temperatures** | |
| Minimum Starting Temperature : | -30°C |
| Maximum Case Temperature : | 80°C |

## CASE STYLE SIZE CHART:

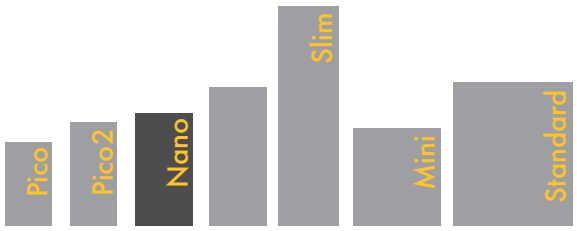


Each case style listed in the Size Chart represents a side lead model with no mounting feet. All HATCH E-HID Ballasts are available in several mounting and wiring configurations, each with slightly different dimensions from those listed in the chart.

# hatch

**Series**
**50W Mini**
**Universal Voltage Models**

## ELECTRONIC HID BALLASTS

**Case Material: Metal**

| Input | |
|---|---|
| Nominal Voltage | Universal 120V to 277V |
| Frequency | 50/60Hz |
| Line Regulation | ± 5% output variation over full input range |
| Power Factor | > 0.95 |
| Total Harmonic Distortion | < 10% |

| Output | |
|---|---|
| Lamp Operating Frequency | 165Hz Square Wave |
| Lamp Current C.F. | <1.3 |

| Ordering Information | |
|---|---|
| Standard Case Quantity | 50 Units |
| Unit Weight/Case Weight | 0.70 lbs/37.5 lbs |

## ELECTRICAL SPECIFICATIONS

| Watts | Hatch Part Number | Description | Lamp Types/ANSI Codes | Voltage Range | Nominal Input Power | Input Current/ Input Voltage | Max. Remote Distance (ft) |
|---|---|---|---|---|---|---|---|
| 50 | MC50-1-F-UNNU | 50 Watt Universal Mini w/Feet | M110, M148 Ceramic MH | Wide Range Input 108-305VAC | 56 Watts | .41 Amps @ 120V<br>.27 Amps @ 208V<br>.24 Amps @ 240V<br>.21 Amps @ 277V | 25 |
| | MC50-1-J-UNNU | 50 Watt Universal Mini Bottom Feed w/Studs | | | | | |

## PRODUCT FEATURES :

- Thermal protection
- Approved for recessed use
- Micro Processor Controlled
  - Safety Shut Down Features
  - Superior Hot Lamp Restrike Characteristic
- Low Voltage Lamp Shutdown
- Sound Rated: A
- Minimum Starting Temperature: -30°C
- Maximum Case Temperature: 80°C
- Complies with FCC Part 18 (Class B) Consumer limits
- Up to 5 Year Warranty
- Lamp end-of-life protected

-Transient Protection Meets ANSI/IEEE C62.41 Cat A
- Short Circuit Protection
- Open Circuit/No Lamp/ Hot Lamp Shutdown, Retry and Ignition Failure Protection:
  Ignition failure shutdown in 5 seconds followed by multiple timed restrikes with lamp ignition or timed shutdown until power is reset (restrike timing is lamp wattage dependent)

## APPROVALS:

c UL us LISTED — Type 1 Outdoor — RoHS COMPLIANT

## WIRING DIAGRAMS:

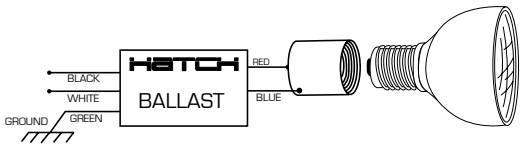


## MOUNTING DIAGRAM:

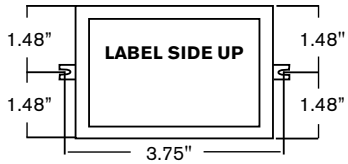


## CASE DIMENSIONS & MECHANICAL SPECIFICATIONS:

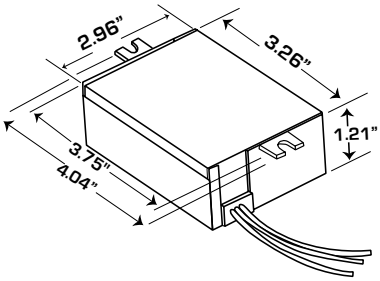


Center line to center line is .16" less than end to end on models with mounting feet.

| CASE STYLE | MOUNTING |
|---|---|
| U - Mini | F - With feet |

| Wiring Information | |
|---|---|
| Lead Length : | Input/Output : 8" |
| Wire Type : | Input: 18AWG, 105°C, 600V |
| **Operating Temperatures** | |
| Minimum Starting Temperature : | -30°C |
| Maximum Case Temperature : | 80°C |

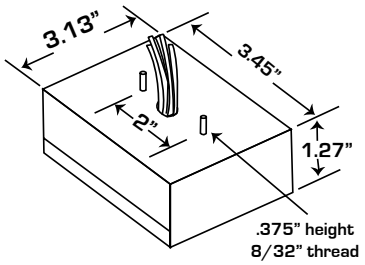


| CASE STYLE | MOUNTING |
|---|---|
| U - Mini | J - Bottom feed with studs |

| Wiring Information | |
|---|---|
| Lead Length : | Input/Output : 10" |
| Wire Type : | Input: 18AWG, 105°C, 600V |
| **Operating Temperatures** | |
| Minimum Starting Temperature : | -30°C |
| Maximum Case Temperature : | 80°C |

## CASE STYLE SIZE CHART:

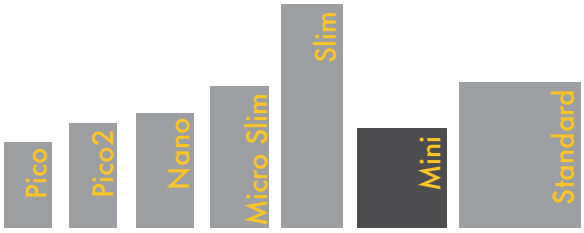


Each case style listed in the Size Chart represents a side lead model with no mounting feet. All HATCH E-HID Ballasts are available in several mounting and wiring configurations, each with slightly different dimensions from those listed in the chart.

# hatch

**Series**
## 70W Micro Slim
**Universal Voltage Models**

## ELECTRONIC HID BALLASTS

**Case Material: Polycarbonate**

| Input | |
|---|---|
| Nominal Voltage | Universal 120V to 277V |
| Frequency | 50/60Hz |
| Line Regulation | ± 5% output variation over full input range |
| Power Factor | > 0.95 |
| Total Harmonic Distortion | < 10% |

| Output | |
|---|---|
| Lamp Operating Frequency | 165Hz Square Wave |
| Lamp Current C.F. | <1.3 |

| Ordering Information | |
|---|---|
| Standard Case Quantity | 50 Units |
| Unit Weight/Case Weight | 0.54 lbs/29.5 lbs. |

## ELECTRICAL SPECIFICATIONS

| Watts | Hatch Part Number | Description | Lamp Types/ ANSI Codes | Voltage Range | Nominal Input Power | Input Current/ Input Voltage | Max. Remote Distance (ft) |
|---|---|---|---|---|---|---|---|
| 70 | MC70-1-F-UNNS | 70 Watt Universal Micro Slim w/Feet and Leads out Opposite sides | M/C85, M/C98, M/C39, M/C143 Ceramic MH | Wide Range Input 108-305VAC | 78 Watts | .65 Amps @ 120V<br>.37 Amps @ 208V<br>.32 Amps @ 240V<br>.28 Amps @ 277V | 25 |
| | MC70-1-T-UNNS | 70 Watt Universal Micro Slim Track w/Leads out Opposite Sides | | | | | |
| | MC70-1-F-UNNSL | 70 Watt Universal Micro Slim w/Feet and Leads out One side | | | | | |
| | MC70-1-T-UNNSL *Not Shown | 70 Watt Universal Micro Slim Track w/Leads out One Side | | | | | |

## PRODUCT FEATURES :

- Thermal protection
- Approved for recessed use
- Micro Processor Controlled
  - Safety Shut Down Features
  - Superior Hot Lamp Restrike Characteristic
- Low Voltage Lamp Shutdown
- Sound Rated: A
- Minimum Starting Temperature: -30°C
- Maximum Case Temperature: 80°C
- Complies with FCC Part 18 (Class B) Consumer limits
- Up to 5 Year Warranty
- Lamp end-of-life protected

-Transient Protection Meets ANSI/IEEE C62.41 Cat A
- Short Circuit Protection
- Open Circuit/No Lamp/ Hot Lamp Shutdown, Retry and Ignition Failure Protection:
  Ignition failure shutdown in 5 seconds followed by multiple timed restrikes with lamp ignition or timed shutdown until power is reset (restrike timing is lamp wattage dependent)

## APPROVALS:

c UL us LISTED — Type 1 Outdoor — RoHS COMPLIANT

## WIRING DIAGRAMS:

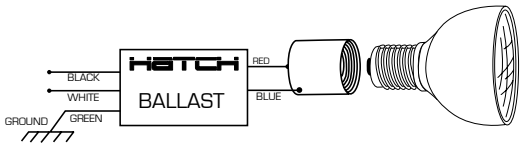


## MOUNTING DIAGRAM:

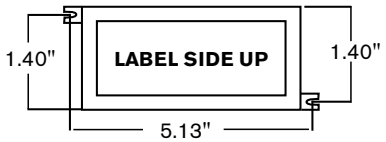


## CASE DIMENSIONS & MECHANICAL SPECIFICATIONS:

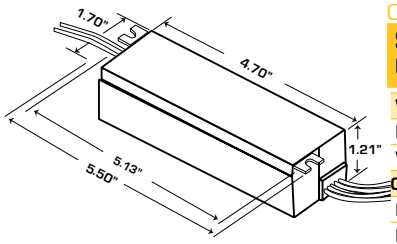


| CASE STYLE | MOUNTING |
|---|---|
| S - Micro Slim<br>Leads out opposite side | **F - With feet** |

| Wiring Information | |
|---|---|
| Lead Length : | Input: 10", Output : 8" |
| Wire Type : | Input: 18AWG, 105°C, 600V |
| **Operating Temperatures** | |
| Minimum Starting Temperature : | -30°C |
| Maximum Case Temperature : | 80°C |

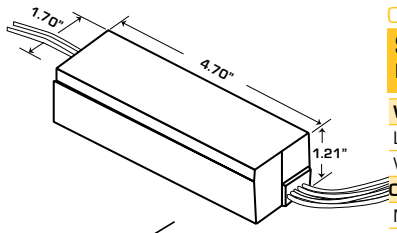


| CASE STYLE | MOUNTING |
|---|---|
| S - Micro Slim<br>Leads out opposite side | **T - Track mount w/o feet** |

| Wiring Information | |
|---|---|
| Lead Length : | Input: 10", Output : 8" |
| Wire Type : | Input: 18AWG, 105°C, 600V |
| **Operating Temperatures** | |
| Minimum Starting Temperature : | -30°C |
| Maximum Case Temperature : | 80°C |

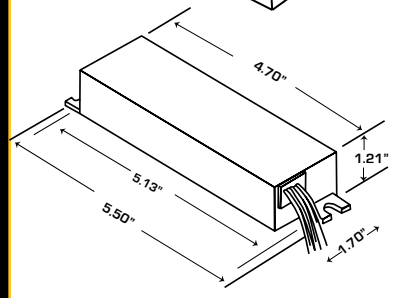


| CASE STYLE | MOUNTING |
|---|---|
| SL - Micro Slim<br>Leads out one side | **F - With feet** |

| Wiring Information | |
|---|---|
| Lead Length : | Input/Output : 8" |
| Wire Type : | Input: 18AWG, 105°C, 600V |
| **Operating Temperatures** | |
| Minimum Starting Temperature : | -30°C |
| Maximum Case Temperature : | 80°C |

## CASE STYLE SIZE CHART:

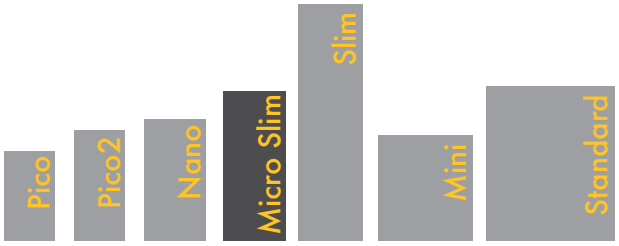


Each case style listed in the Size Chart represents a side lead model with no mounting feet. All HATCH E-HID Ballasts are available in several mounting and wiring configurations, each with slightly different dimensions from those listed in the chart.

# hatch

**Series**
## 70W Mini
**Universal Voltage Models**

## ELECTRONIC HID BALLASTS

**Case Material: Metal**

| Input | |
|---|---|
| Nominal Voltage | Universal 120V to 277V |
| Frequency | 50/60Hz |
| Line Regulation | ± 5% output variation over full input range |
| Power Factor | > 0.95 |
| Total Harmonic Distortion | < 10% |

| Output | |
|---|---|
| Lamp Operating Frequency | 165Hz Square Wave |
| Lamp Current C.F. | <1.3 |

| Ordering Information | |
|---|---|
| Standard Case Quantity | 50 Units |
| Unit Weight/Case Weight | 0.70 lbs/37.5 lbs |

## ELECTRICAL SPECIFICATIONS

| Watts | Hatch Part Number | Description | Lamp Types/ANSI Codes | Voltage Range | Nominal Input Power | Input Current/ Input Voltage | Max. Remote Distance (ft) |
|---|---|---|---|---|---|---|---|
| 70 | MC70-1-F-UNNU | 70 Watt Universal Mini w/Feet | M/C85, M/C98, M/C139, M/C143 Ceramic MH | Wide Range Input 108-305VAC | 78 Watts | .65 Amps @ 120V<br>.37 Amps @ 208V<br>.32 Amps @ 240V<br>.28 Amps @ 277V | 25 |
| | MC70-1-J-UNNU | 70 Watt Universal Mini Bottom Feed w/Studs | | | | | |

## PRODUCT FEATURES :

- Thermal protection
- Approved for recessed use
- Micro Processor Controlled
  - Safety Shut Down Features
  - Superior Hot Lamp Restrike Characteristic
- Low Voltage Lamp Shutdown
- Sound Rated: A
- Minimum Starting Temperature: -30°C
- Maximum Case Temperature: 80°C
- Complies with FCC Part 18 (Class B) Consumer limits
- Up to 5 Year Warranty
- Lamp end-of-life protected

-Transient Protection Meets ANSI/IEEE C62.41 Cat A
- Short Circuit Protection
- Open Circuit/No Lamp/ Hot Lamp Shutdown, Retry and Ignition Failure Protection:

  Ignition failure shutdown in 5 seconds followed by multiple timed restrikes with lamp ignition or timed shutdown until power is reset (restrike timing is lamp wattage dependent)

## APPROVALS:

c UL us LISTED — Type 1 Outdoor — RoHS COMPLIANT

## WIRING DIAGRAMS:

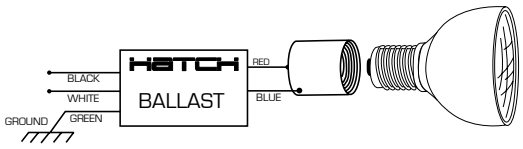


## MOUNTING DIAGRAM:

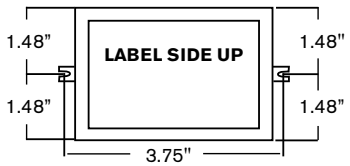


## CASE DIMENSIONS & MECHANICAL SPECIFICATIONS:

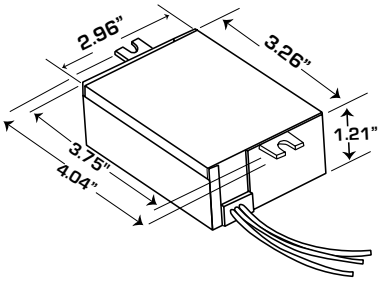


Center line to center line is .16" less than end to end on models with mounting feet.

CASE STYLE: U - Mini — MOUNTING: F - With feet

| Wiring Information | |
|---|---|
| Lead Length : | Input/Output : 8" |
| Wire Type : | Input: 18AWG, 105°C, 600V |
| **Operating Temperatures** | |
| Minimum Starting Temperature : | -30°C |
| Maximum Case Temperature : | 80°C |

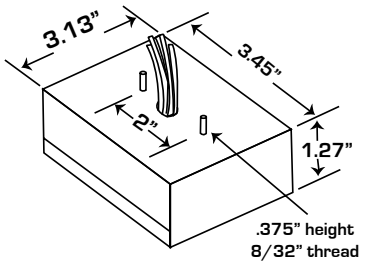


CASE STYLE: U - Mini — MOUNTING: J - Bottom feed with studs

| Wiring Information | |
|---|---|
| Lead Length : | Input/Output : 10" |
| Wire Type : | Input: 18AWG, 105°C, 600V |
| **Operating Temperatures** | |
| Minimum Starting Temperature : | -30°C |
| Maximum Case Temperature : | 80°C |

## CASE STYLE SIZE CHART:

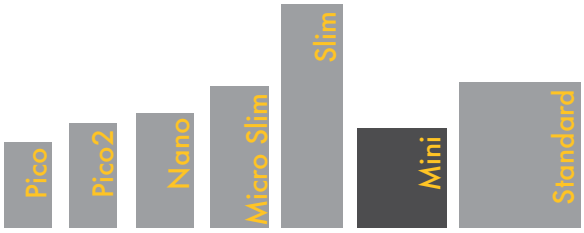


Each case style listed in the Size Chart represents a side lead model with no mounting feet. All HATCH E-HID Ballasts are available in several mounting and wiring configurations, each with slightly different dimensions from those listed in the chart.

# hatch

**Series**
**100W Slim**
**Universal Voltage Models**

## ELECTRONIC HID BALLASTS

**Case Material: Metal**

| Input | |
|---|---|
| Nominal Voltage | Universal 120V to 277V |
| Frequency | 50/60Hz |
| Line Regulation | ± 5% output variation over full input range |
| Power Factor | > 0.95 |
| Total Harmonic Distortion | < 10% |

| Output | |
|---|---|
| Lamp Operating Frequency | 165Hz Square Wave |
| Lamp Current C.F. | <1.3 |

| Ordering Information | |
|---|---|
| Standard Case Quantity | 50 Units |
| Unit Weight/Case Weight | 0.95 lbs/50 lbs. |

## ELECTRICAL SPECIFICATIONS

| Watts | Hatch Part Number | Description | Lamp Types/ ANSI Codes | Voltage Range | Nominal Input Power | Input Current/ Input Voltage | Max. Remote Distance (ft) |
|---|---|---|---|---|---|---|---|
| 100 | MC100-1-F-UNNS-HB | 100 Watt Universal Slim w/Feet and Leads out Opposite Sides | M/C90, M/C140 Ceramic MH | Wide Range Input 108-305VAC | 110 Watts | .94 Amps @ 120V .47 Amps @ 240V | 25 |
| | MC100-1-F-UNNSL-HB *Not Shown | 100 Watt Universal Slim w/Feet and Leads out One Side | | | | | |

## PRODUCT FEATURES :

- Thermal protection
- Approved for recessed use
- Micro Processor Controlled
  - Safety Shut Down Features
  - Superior Hot Lamp Restrike Characteristic
- Low Voltage Lamp Shutdown
- Sound Rated: A
- Minimum Starting Temperature: -30°C
- Maximum Case Temperature: 80°C
- Complies with FCC Part 18 (Class B) Consumer limits
- Up to 5 Year Warranty
- Lamp end-of-life protected

-Transient Protection Meets ANSI/IEEE C62.41 Cat A
- Short Circuit Protection
- Open Circuit/No Lamp/ Hot Lamp Shutdown, Retry and Ignition Failure Protection:
  Ignition failure shutdown in 5 seconds followed by multiple timed restrikes with lamp ignition or timed shutdown until power is reset (restrike timing is lamp wattage dependent)

## APPROVALS:

c UL us LISTED — Type 1 Outdoor — RoHS COMPLIANT

## WIRING DIAGRAMS:

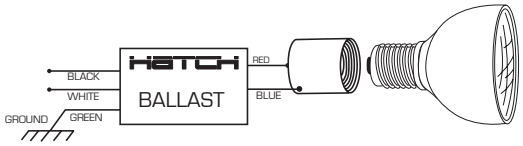


## MOUNTING DIAGRAM:

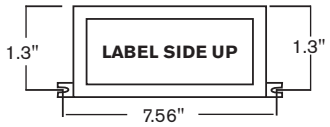


## CASE DIMENSIONS & MECHANICAL SPECIFICATIONS:

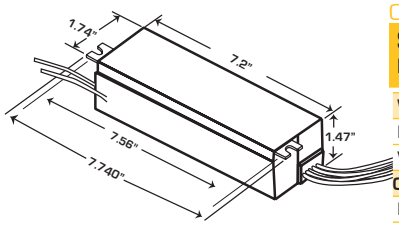


| CASE STYLE | MOUNTING |
|---|---|
| S - Slim Leads out opposite side | F - With feet |

| Wiring Information | |
|---|---|
| Lead Length : | Input: 8", Output : 10" |
| Wire Type : | Input: 18AWG, 105°C, 600V |
| **Operating Temperatures** | |
| Minimum Starting Temperature : | -30°C |
| Maximum Case Temperature : | 80°C |

## CASE STYLE SIZE CHART:

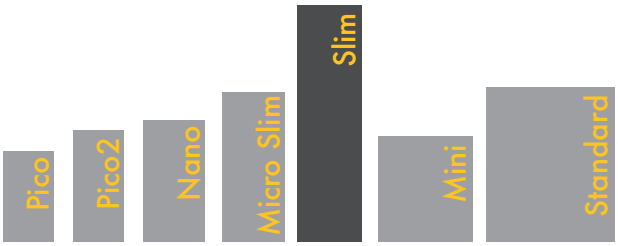


Each case style listed in the Size Chart represents a side lead model with no mounting feet. All HATCH E-HID Ballasts are available in several mounting and wiring configurations, each with slightly different dimensions from those listed in the chart.

# hatch

**Series**
## 100W Standard
**Universal Voltage Models**

## ELECTRONIC HID BALLASTS

**Case Material: Metal**

| Input | |
|---|---|
| Nominal Voltage | Universal 120V to 277V |
| Frequency | 50/60Hz |
| Line Regulation | ± 5% output variation over full input range |
| Power Factor | > 0.95 |
| Total Harmonic Distortion | < 10% |

| Output | |
|---|---|
| Lamp Operating Frequency | 165Hz Square Wave |
| Lamp Current C.F. | <1.3 |

| Ordering Information | |
|---|---|
| Standard Case Quantity | 25 Units |
| Unit Weight/Case Weight | 1.01 lbs/53 lbs |

## ELECTRICAL SPECIFICATIONS

| Watts | Hatch Part Number | Description | Lamp Types/ANSI Codes | Voltage Range | Nominal Input Power | Input Current/ Input Voltage | Max. Remote Distance (ft) |
|---|---|---|---|---|---|---|---|
| 100 | MC100-1-F-UNNU-HB | 100 Watt Universal Standard w/Feet | M/C90, M/C140 Ceramic MH | Wide range input 108-305VAC | 110 Watts | .92 Amps @ 120V<br>.53 Amps @ 208V<br>.46 Amps @ 240V<br>.40 Amps @ 277V | 25 |
| | MC100-1-J-UNNU-HB | 100 Watt Universal Standard Bottom Feed w/Studs | | | | | |

## PRODUCT FEATURES :

- Thermal protection
- Approved for recessed use
- Micro Processor Controlled
  - Safety Shut Down Features
  - Superior Hot Lamp Restrike Characteristic
- Sound Rated: A
- Minimum Starting Temperature: -30°C
- Maximum Case Temperature: 80°C
- Complies with FCC Part 18 (Class B) Consumer limits
- Up to 5 Year Warranty
- Lamp end-of-life protected
- Type 1 Outdoor
- Short Circuit Protection
- Open Circuit/No Lamp/ Hot Lamp Shutdown, Retry and Ignition Failure Protection:
  Ignition failure shutdown in 5 seconds followed by multiple timed restrikes with lamp ignition or timed shutdown until power is reset (restrike timing is lamp wattage dependent)

## APPROVALS:

c UL us LISTED — Type 1 Outdoor — RoHS COMPLIANT

## WIRING DIAGRAM:

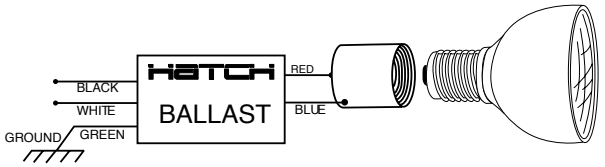


## MOUNTING DIAGRAM:

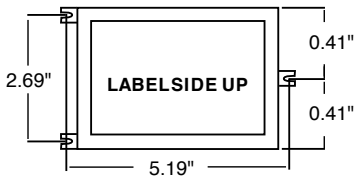


## CASE DIMENSIONS & MECHANICAL SPECIFICATIONS:

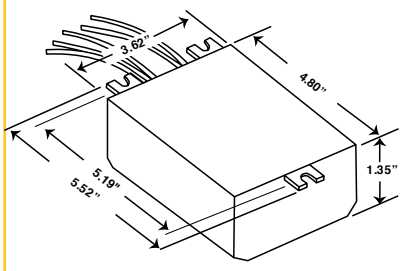


Center line to center line is .16" less than end to end on models with mounting feet.

| CASE STYLE | MOUNTING |
|---|---|
| U - Standard | F -With feet |

| Wiring Information | |
|---|---|
| Lead Length : | Input/ Output : 8" |
| Wire Type : | Input: 18AWG, 105°C, 600V |
| **Operating Temperatures** | |
| Minimum Starting Temperature : | -30°C |
| Maximum Case Temperature : | 80°C |

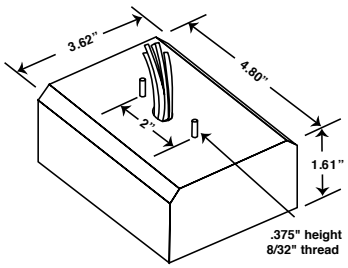


| CASE STYLE | MOUNTING |
|---|---|
| U - Standard | J -Bottom feed with studs |

| Wiring Information | |
|---|---|
| Lead Length : | Input/ Output : 9" |
| Wire Type : | Input: 18AWG, 105°C, 600V |
| **Operating Temperatures** | |
| Minimum Starting Temperature : | -30°C |
| Maximum Case Temperature : | 80°C |

## CASE STYLE SIZE CHART:

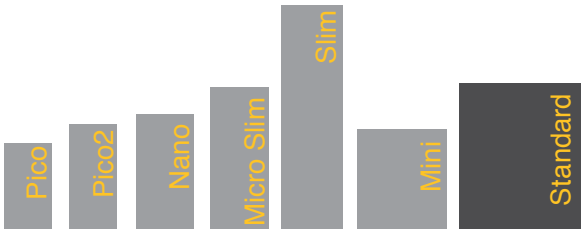


Each case style listed in the Size Chart represents a side lead model with no mounting feet.All HATCH E-HID Ballasts are available in several mounting and wiring configurations, each with slightly different dimensions from those listed in the chart.

# hatch

**Series**
## 150W Standard
**Dedicated Voltage Models**

## ELECTRONIC HID BALLASTS

**Case Material: Metal**

| Input | |
|---|---|
| Nominal Voltage | Dedicated 120V or 277V |
| Frequency | 50/60Hz |
| Line Regulation | ± 5% output variation over full input range |
| Power Factor | > 0.95 |
| Total Harmonic Distortion | < 10% |

| Output | |
|---|---|
| Lamp Operating Frequency | 165Hz Square Wave |
| Lamp Current C.F. | <1.3 |

| Ordering Information | |
|---|---|
| Standard Case Quantity | 50 Units |
| Unit Weight/Case Weight | 0.88 lbs/46.5 lbs |

## ELECTRICAL SPECIFICATIONS

| Watts | Hatch Part Number | Description | Lamp Types/ANSI Codes | Voltage Range | Nominal Input Power | Input Current/ Input Voltage | Max. Remote Distance (ft) |
|---|---|---|---|---|---|---|---|
| 150 | MC150-1-F-120U | 150 Watt 120V Standard w/Feet | M102, M142 Ceramic MH | 120V AC Nominal 108 - 132V<br>277V AC Nominal 220 - 277V | 164 Watts | 1.37 Amps @120V<br>.69 Amps @ 240V<br>.60 Amps @ 277V | 25 |
| | MC150-1-J-120U | 150 Watt 120V Standard Bottom Feed w/Studs | | | | | |
| | MC150-1-F-277U | 150 Watt 277V Standard w/Feet | | | | | |
| | MC150-1-J-277U | 150 Watt 277V Standard Bottom Feed w/Studs | | | | | |

**DO NOT USE Osram Powerball Lamps**

### PRODUCT FEATURES :

- Thermal protection
- Approved for recessed use
- Micro Processor Controlled
  - Safety Shut Down Features
  - Superior Hot Lamp Restrike Characteristic
- Sound Rated: A
- Minimum Starting Temperature: -30°C
- Maximum Case Temperature: 80°C
- Complies with FCC Part 18 (Class B) Consumer limits
- Up to 5 Year Warranty
- Transient Protection
- Lamp end-of-life protected
- Short Circuit Protection
- Open Circuit/No Lamp/ Hot Lamp Shutdown, Retry and Ignition Failure Protection:
  Ignition failure shutdown in 5 seconds followed by multiple timed restrikes with lamp ignition or timed shutdown until power is reset (restrike timing is lamp wattage dependent)

### APPROVALS:

c UL us LISTED — Type 1 Outdoor — E — RoHS COMPLIANT

**CALIFORNIA TITLE 20**

### WIRING DIAGRAM:

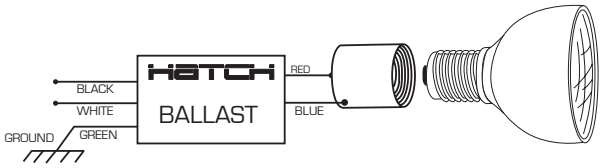


### MOUNTING DIAGRAM:

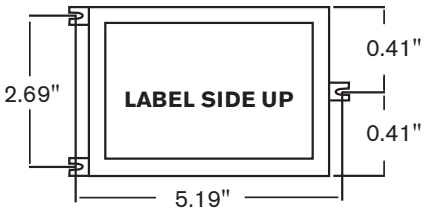


### CASE DIMENSIONS & MECHANICAL SPECIFICATIONS:

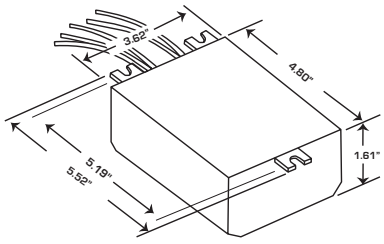


Center line to center line is .16" less than end to end on models with mounting feet.

| CASE STYLE | MOUNTING |
|---|---|
| U - Standard | F - With feet |

| Wiring Information | |
|---|---|
| Lead Length : | Input/Output : 8" |
| Wire Type : | Input: 18AWG, 105°C, 600V |
| **Operating Temperatures** | |
| Minimum Starting Temperature : | -30°C |
| Maximum Case Temperature : | 80°C |

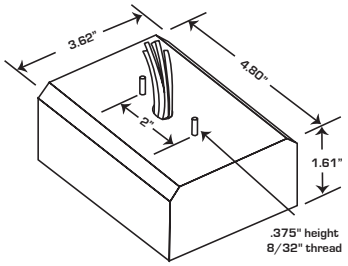


| CASE STYLE | MOUNTING |
|---|---|
| U - Standard | J - Bottom feed with studs |

| Wiring Information | |
|---|---|
| Lead Length : | Input/Output : 9" |
| Wire Type : | Input: 18AWG, 105°C, 600V |
| **Operating Temperatures** | |
| Minimum Starting Temperature : | -30°C |
| Maximum Case Temperature : | 80°C |

### CASE STYLE SIZE CHART:

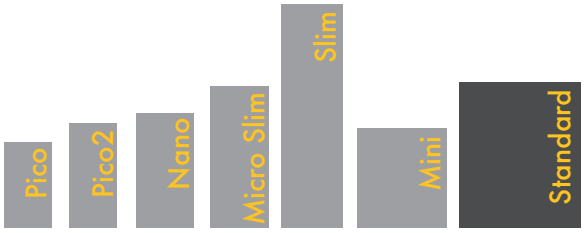


Each case style listed in the Size Chart represents a side lead model with no mounting feet. All HATCH E-HID Ballasts are available in several mounting and wiring configurations, each with slightly different dimensions from those listed in the chart.

**Available for CMH or HPS Lamps**

# 10 TO 38 WATT
# 1-LAMP "FR" SERIES COMPACT FLUORESCENT BALLAST

## Compact Fluorescent Hardwire Ballast Features:

- Auto Restart After Hot Relamp
- Deactive Lamp Protection Circuit
- Flicker Free Operation
- High Power Factor
- Low THD
- 100% Factory Tested
- High Reliability
- No Audible Noise
- True Preheat Starting
- No Starting Aid Required
- Energy Efficient
- High Frequency Operation
- Solid State
- Moisture and Shock Resistant
- No PCBs

## Environmental Specifications

| | |
|---|---|
| **Maximum Case Temperature** | 70˚C at "T" point |
| **Minimum Starting Temperature** | -25˚C |
| **Sound Rating** | A+ |
| **Operating Humidity** | 95% relative humidity, non-condensating |
| **Environmental Protection** | Epoxy Sealed for moisture resistance and shock vibration resistance |
| **Safety Listing** | Class P<br>Type 1 outdoor |

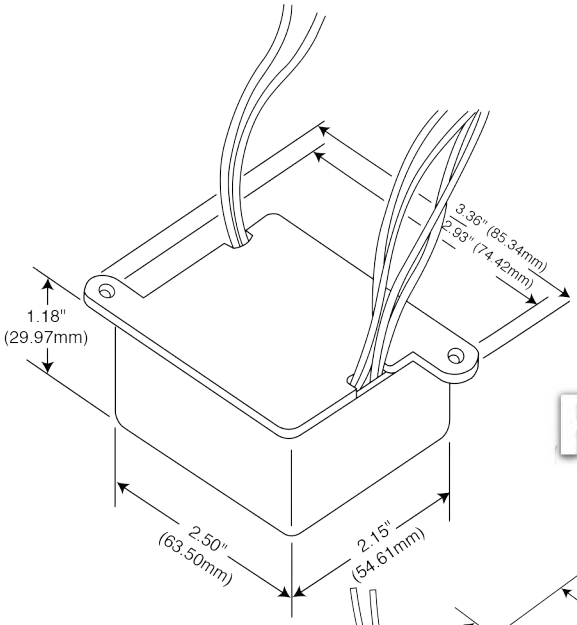


FR-L

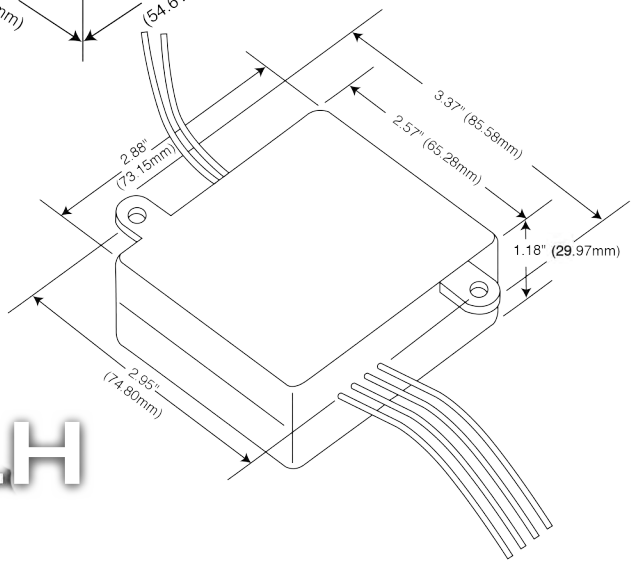


FR-LH

## Electrical/Mechanical Specifications

**Input Voltage** .....120V 50/60 Hz
.....230V 50 Hz (special order)
.....277V 60 Hz
**Color** .....White

**Weight**.....FRL-5.0 oz./ FRLH-6.0 oz.

**Operating Frequency** .....50 KHz +

**Power Factor** .....≥ 0.99

**Total Harmonic Distortion** .....5-13% depending
.....on lamp/ballast combination

**Deactive Lamp Protection** .....Yes

**Auto Restart After Hot Relamp** .....Yes
**Current Crest Factor**.....≤ 1.7

**Open Circuit Protected** .....Yes

**RFI Suppression**.....Yes

**Input Leads** .....10⅝" 18 AWG solid 105
.....degree C stripped ⅜"

**Output Leads**.....10⅝" 18 AWG solid 105
.....degree C stripped ⅜"

*Meets ANSI 15 C62.41, ANSI C82.1 CLASS P*

**Safety Agency** ..... c UL us LISTED

# 1-LAMP "FR" SERIES 10 TO 38 WATT

| Watts | GE2D | GE BIAX | OSRAM | PHILIPS | No. Lamps | Input Volts | Input Amps | Case Style | Hatch Item Number |
|---|---|---|---|---|---|---|---|---|---|
| 10 | F10/2D/4P | F10DBX | CF10DD/E DULUX D/E 10 | | 1 | 120 | 0.11 | FR-LH | FR1000LH |
| | | | | | | 230 | 0.06 | FR-LH | FR1000-230* |
| 13 | | F13DBX F13TBX | CF13DD/E DULUX D/E 13 | PL-C 13W/4P | 1 | 120 | 0.13 | FR-LH FR-L | FR1300LH FR1300L |
| | | | | | | 230 | 0.07 | FR-LH | FR1300-230* |
| | | | | | | 277 | 0.06 | FR-LH FR-L | FR1300-277 FR1300-277L |
| 18 | F16/2D/4P | F18DBX F18TBX | CF18DD/E CF18DT/E/IN DULUX D/E 18 DULUX T/E/IN18 | PL-C 18W/4P PL-T 18W/4P | 1 | 120 | 0.15 | FR-LH FR-L | FR1800LH FR1800L |
| | | | | | | 230 | 0.08 | FR-LH | FR1800-230* |
| | | | | | | 277 | 0.07 | FR-LH FR-L | FR1800-277 FR1800-277L |
| 21 | F21/2D/4P | | | | 1 | 120 | 0.17 | FR-LH FR-L | FR2100LH FR2100L |
| | | | | | | 230 | 0.10 | FR-LH | FR2100-230* |
| | | | | | | 277 | 0.08 | FR-LH FR-L | FR2100-277 FR2100-277L |
| 26 | F28/2D/4P | F26DBX F26TBX | CF26DD/E CF26DT/E/IN DULUX D/E 26 DULUX T/E/IN 26 | PL-C 26W/4P PL-T 26W/4P | 1 | 120 | 0.21 | FR-LH FR-L | FR2600LH FR2600L |
| | | | | | | 230 | 0.11 | FR-LH | FR2600-230* |
| | | | | | | 277 | 0.10 | FR-LH FR-L | FR2600-277 FR2600-277L |
| 32 | | F32TBX | CF32DT/E/IN DULUX T/E/IN 32 | PL-T 32W/4P | 1 | 120 | 0.26 | FR-LH FR-L | FR3200LH FR3200L |
| | | | | | | 230 | 0.14 | FR-LH | FR3200-230* |
| | | | | | | 277 | 0.12 | FR-LH FR-L | FR3200-277 FR3200-277L |
| 38 | F38/2D/4P | | | | 1 | 120 | 0.31 | FR-LH FR-L | FR3800LH FR3800L |
| | | | | | | 230 | 0.16 | FR-LH | FR3800-230* |
| | | | | | | 277 | 0.14 | FR-LH FR-L | FR3800-277 FR3800-277L |

***Not UL Listed**

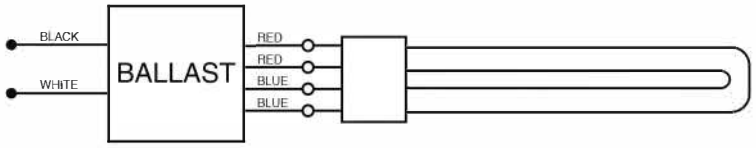


## WIRING DIAGRAM

# 10 TO 42 WATT "HR" SERIES
# 1-LAMP COMPACT FLUORESCENT BALLAST

**Side Lead and Bottom Feed Models**

## Compact Fluorescent Hardwire Ballast Features:

- Auto Restart After Hot Relamp
- Deactive Lamp Protection Circuit
- Flicker Free Operation
- High Power Factor
- Low THD
- 100% Factory Tested
- High Reliability
- No Audible Noise
- True Preheat Starting
- No Starting Aid Required
- Energy Efficient
- High Frequency Operation
- Solid State
- Moisture and Shock Resistant
- No PCBs
- Bottom Feed Models Available

## Environmental Specifications

| | |
|---|---|
| **Maximum Case Temperature** | 70℃ at "T" point |
| **Minimum Starting Temperature** | -25℃ |
| **Sound Rating** | A+ |
| **Operating Humidity** | 95% relative humidity, non-condensating |
| **Environmental Protection** | Epoxy Sealed for moisture resistance and shock vibration resistance |
| **Safety Listing** | Class P Type 1 outdoor |

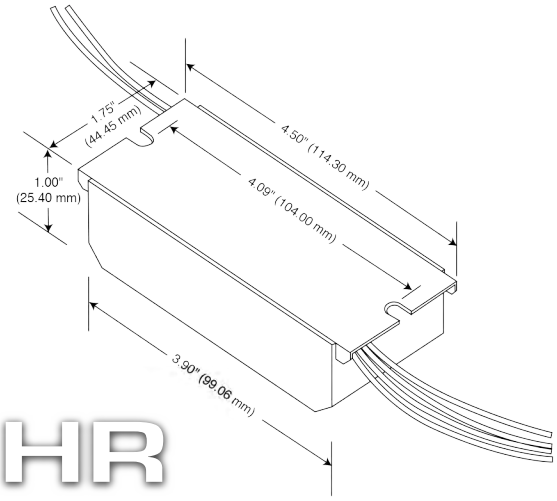


HR

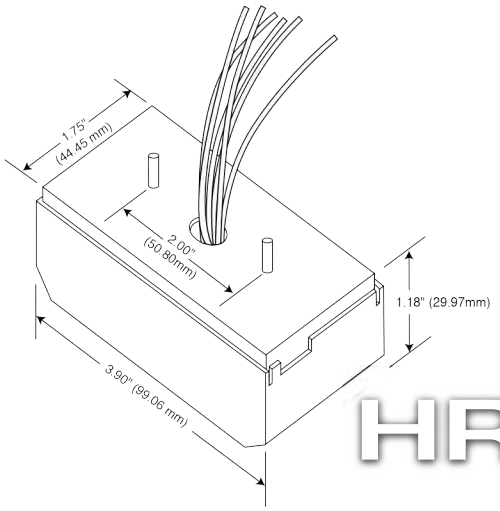


HR-BF

## Electrical/Mechanical Specifications

**Input Voltage** .....120V 50/60 Hz
.....230V 50 Hz (special order)
.....277V 60 Hz

**Color** .....White

**Weight**.....HR-6.0 oz./ HR-BF-7.0 oz.

**Operating Frequency** .....50 KHz +

**Power Factor** .....≥ 0.99

**Total Harmonic Distortion** .....5-13% depending
.....on lamp/ballast combination

**Deactive Lamp Protection** .....Yes

**Auto Restart After Hot Relamp** .....Yes

**Current Crest Factor**.....≤ 1.7

**Open Circuit Protected** .....Yes

**RFI Suppression**.....Yes

**Input Leads** .....$10^{5}/_{8}$" 18 AWG solid 105
.....degree C stripped $^{3}/_{8}$"

**Output Leads**.....$10^{5}/_{8}$" 18 AWG solid 105
.....degree C stripped $^{3}/_{8}$"

*Meets ANSI 15 C62.41, ANSI C82.1 CLASS P*

Built with two threaded studs, 2" on center and bottom center feed wiring, for easily replacing magnetic ballasts.

**Safety Agency** ..... c UL us LISTED
.....*HR 4200 Models Does Not Have UL

# 1-LAMP HR & HR-BF 10 TO 42 WATT

| Watts | GE2D | GE BIAX | OSRAM | PHILIPS | No. Lamps | Input Volts | Input Amps | Case Style | Hatch Item Number |
|---|---|---|---|---|---|---|---|---|---|
| | | | | | | 120 | 0.11 | HR | HR1000 |
| | | | | | | | | HR-BF | HR1000 BF |
| 10 | F10/2D/4P | F10DBX | CF10DD/E DULUX D/E 10 | | 1 | 230 | 0.06 | HR | HR1000-230* |
| | | | | | | 277 | 0.05 | HR | HR1000-277 |
| | | | | | | | | HR-BF | HR1000-277 BF |
| | | | | | | 120 | 0.13 | HR | HR1300 |
| | | | | | | | | HR-BF | HR1300 BF |
| 13 | | F13DBX F13TBX | CF13DD/E DULUX D/E 13 | PL-C 13W/4P | 1 | 230 | 0.07 | HR | HR1300-230* |
| | | | | | | 277 | 0.06 | HR | HR1300-277 |
| | | | | | | | | HR-BF | HR1300-277 BF |
| | | | | | | 120 | 0.15 | HR | HR1800 |
| | | | | | | | | HR-BF | HR1800 BF |
| 18 | F16/2D/4P | F18DBX F18TBX | CF18DD/E CF18DT/E/IN DULUX D/E 18 DULUX T/E/IN18 | PL-C 18W/4P PL-T 18W/4P | 1 | 230 | 0.08 | HR | HR1800-230* |
| | | | | | | 277 | 0.07 | HR | HR1800-277 |
| | | | | | | | | HR-BF | HR1800-277 BF |
| | | | | | | 120 | 0.17 | HR | HR2100 |
| | | | | | | | | HR-BF | HR2100 BF |
| 21 | F21/2D/4P | | | | 1 | 230 | 0.10 | HR | HR2100-230* |
| | | | | | | 277 | 0.08 | HR | HR2100-277 |
| | | | | | | | | HR-BF | HR2100-277 BF |
| | | | | | | 120 | 0.21 | HR | HR2600 |
| | | | | | | | | HR-BF | HR2600 BF |
| 26 | F28/2D/4P | F26DBX F26TBX | CF26DD/E CF26DT/E/IN DULUX D/E 26 DULUX T/E/IN 26 | PL-C 26W/4P PL-T 26W/4P | 1 | 230 | 0.11 | HR | HR2600-230* |
| | | | | | | 277 | 0.10 | HR | HR2600-277 |
| | | | | | | | | HR-BF | HR2600-277 BF |
| | | | | | | 120 | 0.26 | HR | HR3200 |
| | | | | | | | | HR-BF | HR3200 BF |
| 32 | | F32TBX | CF32DT/E/IN DULUX T/E/IN 32 | PL-T 32W/4P | 1 | 230 | 0.14 | HR | HR3200-230* |
| | | | | | | 277 | 0.12 | HR-BF | HR3200-277 BF |
| | | | | | | 120 | 0.31 | HR | HR3800 |
| | | | | | | | | HR-BF | HR3800 BF |
| 38 | F38/2D/4P | | | | 1 | 230 | 0.16 | HR | HR3800-230* |
| | | | | | | 277 | 0.14 | HR | HR3800-277 |
| | | | | | | | | HR-BF | HR3800-277 BF |
| | | | | | | 120 | 0.36 | HR | HR4200 |
| | | | | | | | | HR-BF | HR4200BF |
| 42 | | F42TBX F42QBX | CF42DT/E/IN DULUX T/E/IN 42 | PL-T 42W/4P | 1 | 230 | 0.19 | HR | HR4200-230* |
| | | | | | | 277 | 0.17 | HR | HR4200-277 |
| | | | | | | | | HR-BF | HR4200-277BF |

***Not UL Listed**

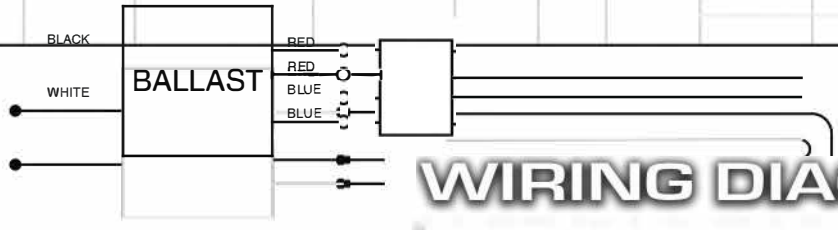


## WIRING DIAGRAM

# hatch

**Part No.**
**HC1C3032RS/12/W**
**For T9 LAMPS**

## ELECTRONIC COMPACT FLUORESCENT BALLAST

| | |
|---|---|
| **Input Voltage** | 120Vac ± 10% |
| **Ballast Factor** | Normal |
| **Starting Method** | Rapid Start |

### CERTIFICATIONS

c UL us

RoHS COMPLIANT

energy APPROVED

## ELECTRICAL SPECIFICATIONS BY LAMP TYPE

| Lamp Type | No. of Lamps | Input Watts | Input Current (Amps) | Power Factor | Crest Factor | Ballast Factor | Ballast Efficacy Factor | Max THD% |
|---|---|---|---|---|---|---|---|---|
| F12T9 32W | 1 | 34 | 0.53 | 0.53 | 1.68 | 1.0 | 2.94 | 150 |
| FCL30 30W | 1 | 27 | 0.45 | 0.51 | 1.64 | 0.95 | 3.52 | 150 |
| FC8T9 22W | 1 | 27 | 0.40 | 0.54 | 1.64 | 1.14 | 4.22 | 150 |

## PERFORMANCE:

-Sound Rated: A
-Minimum Starting Temperature: 0°F, -18°C
-Maximum Case Temperature: 167°F, 75°C
-Meets FCC Part 18 (Class B) Consumer Limits
-3 Year Warranty
-Input Frequency 60hz

## APPROVALS:

-Transient Protection Meets ANSI/IEEE C62.41 Cat A
-Lamp end-of-life protected
-UL, cUL 935 listed

## PHYSICAL DIMENSIONS:

-Case Length (L): 2.84"
-Total Length (L2): 3.41"
-Width (W): 1.81"
-Height (H): 1.18"
-Mounting (M1): 3.10"

Lead Length
-White/Black: 17"
-Blue: 9.5"
-Red: 9.5"

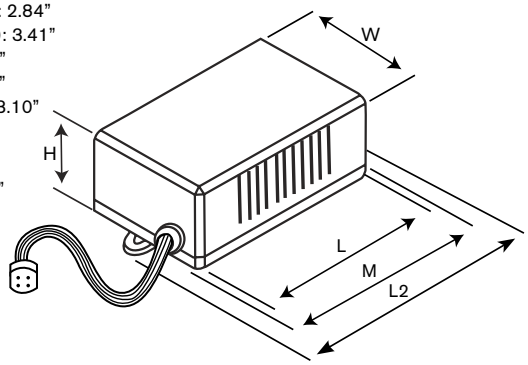


## WIRING DIAGRAM:

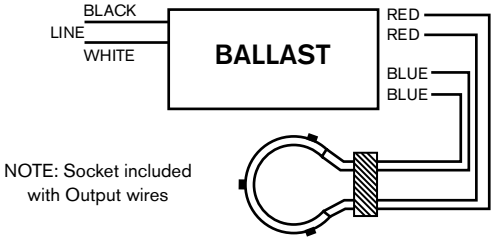


NOTE: Socket included with Output wires

## $T_C$ POINT LOCATION:

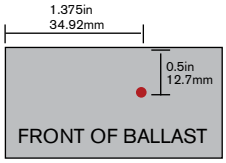

# hatch

**Part No.**
**HC2C72RS/12/W**
**For T9 Lamps**

## ELECTRONIC COMPACT FLUORESCENT BALLAST

| | |
|---|---|
| **Input Voltage** | 120Vac ± 10% |
| **Ballast Factor** | Normal |
| **Starting Method** | Rapid Start |

### CERTIFICATIONS

c UL us

RoHS COMPLIANT

energy APPROVED

## ELECTRICAL SPECIFICATIONS BY LAMP TYPE

| Lamp Type | No. of Lamps | Input Watts | Input Current (Amps) | Power Factor | Crest Factor | Ballast Factor | Ballast Efficacy Factor | Max THD% |
|---|---|---|---|---|---|---|---|---|
| FC8T9 + FC12T9 | 2 | 39 | 0.60 | 0.54 | 1.46 | 0.76 | 1.95 | 150 |
| FC12T9 + FC16T9 | 2 | 49 | 0.73 | 0.56 | 1.68 | 0.70 | 1.43 | 150 |
| FC8T9 | 1 | 20 | 0.32 | 0.50 | <1.7 | 0.84 | 4.20 | 150 |
| | 2 | 36 | 0.53 | 0.54 | <1.7 | 0.77 | 2.13 | 150 |
| FC12T9 | 1 | 24 | 0.39 | 0.52 | <1.7 | 0.67 | 2.79 | 150 |
| | 2 | 46 | 0.66 | 0.59 | <1.7 | 0.63 | 1.37 | 150 |
| FC16T9 | 1 | 31 | 0.47 | 0.55 | <1.7 | 0.67 | 2.16 | 150 |
| | 2 | 58 | 0.80 | 0.61 | <1.7 | 0.62 | 1.06 | 150 |

### PERFORMANCE:

-Sound Rated: A
-Minimum Starting Temperature: 0°F, -18°C
-Maximum Case Temperature: 167°F, 75°C
-Meets FCC Part 18 (Class B) Consumer Limits
-3 Year Warranty
-Input Frequency 60Hz
-Ballast frequency for all listed lamps: 20KHz-33KHz

### APPROVALS:

-Transient Protection Meets ANSI/IEEE C62.41 Cat A
-Lamp end-of-life protected
-UL, cUL 935 listed

### PHYSICAL DIMENSIONS:

-Length (L): 6.46"
-Width (W): 1.89"
-Height (H): 1.00"
-Mounting (M1): 6.00"

Lead Length
-White/Black: 12"
-Blue: 9"
-Red: 9"

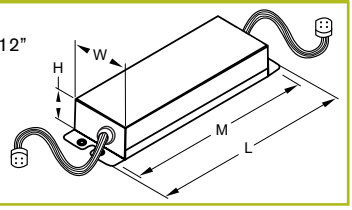


### WIRING DIAGRAM:

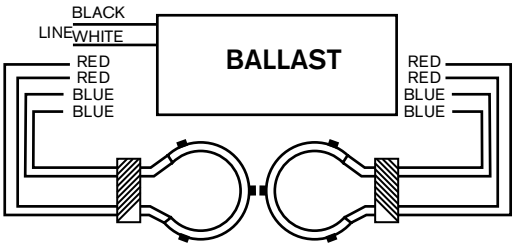


### $T_C$ POINT LOCATION:

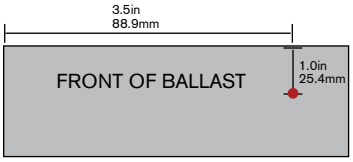

# hatch

**Part No.**
**HC126RS/12/WJ**
**For 1x26 WATT COMPACT FLUORESCENT**

## ELECTRONIC COMPACT FLUORESCENT BALLAST

| | |
|---|---|
| **Input Voltage** | 120Vac ± 10% |
| **Ballast Factor** | Normal |
| **Starting Method** | Rapid Start |

### CERTIFICATIONS

c UL us

RoHS COMPLIANT

energy APPROVED

## ELECTRICAL SPECIFICATIONS BY LAMP TYPE

| Lamp Type | No. of Lamps | Input Watts | Input Current (Amps) | Power Factor | Crest Factor | Ballast Factor | Ballast Efficacy Factor | Max THD% |
|---|---|---|---|---|---|---|---|---|
| CFQ26WG23q | 1 | 24 | 0.40 | 0.54 | <1.7 | 0.90 | 3.75 | 150 |
| CFS28W/GR10q | 1 | 26 | 0.40 | 0.58 | <1.7 | 0.90 | 3.46 | 130 |
| F32T8 | 1 | 32 | 0.45 | 0.59 | <1.7 | 0.95 | 2.97 | 130 |
| F25T8 | 1 | 25 | 0.37 | 0.57 | <1.7 | 0.95 | 3.80 | 130 |
| F19T5(28" or 30") | 1 | 18 | 0.29 | 0.52 | <1.7 | 1.00 | 5.56 | 150 |
| F18T5(24" or 26") | 1 | 17 | 0.27 | 0.52 | <1.7 | 1.00 | 5.88 | 160 |
| F17T8 | 1 | 18 | 0.27 | 0.54 | <1.7 | 1.00 | 5.55 | 150 |
| F15T8 | 1 | 16 | 0.26 | 0.52 | <1.7 | 1.00 | 6.25 | 150 |
| F13T8 | 1 | 16 | 0.26 | 0.51 | <1.7 | 1.10 | 6.88 | 160 |
| FC9T5 | 1 | 23 | 0.35 | 0.55 | <1.7 | 1.05 | 4.57 | 140 |

### PERFORMANCE:

-Sound Rated: A
-Minimum Starting Temperature: 0°F, -18°C
-Maximum Case Temperature: 167°F, 75°C
-Meets FCC Part 18 (Class B) Consumer Limits
-3 Year Warranty
-Input Frequency: 60hz

### APPROVALS:

-Transient Protection Meets ANSI/IEEE C62.41 Cat A
-Lamp end-of-life protected
-UL, cUL 935 listed

### PHYSICAL DIMENSIONS:

-Length (L): 4.00"
-Width (W): 1.87"
-Height (H): 1.19"
-Mounting (M1): 3.58"
-Mounting (M2): 2.00"
-Mounting (M3): 0.63"

Lead Lengh:
-White, Black: 12"
-Blue: 12"
-Red: 12"

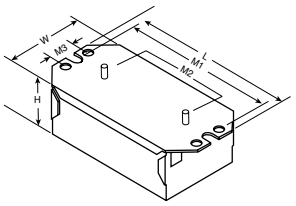


### WIRING DIAGRAM:

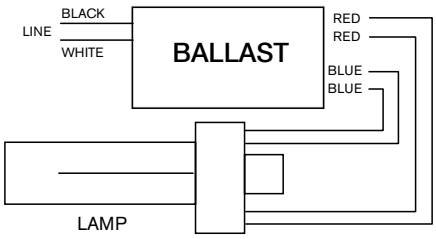


### $T_C$ POINT LOCATION:

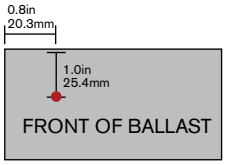

# hatch

**PART NO.**
**HC213PS/UV/D**
**For 2x13 WATT COMPACT FLUORESCENT**

## ELECTRONIC COMPACT FLUORESCENT BALLAST

| | |
|---|---|
| **Input Voltage** | 120~277Vac ± 10% |
| **Power Factor** | High |
| **Starting Method** | Programmed Start |
| **Lamp Connection** | Series |

### CERTIFICATIONS

c UL us — RoHS COMPLIANT — energy APPROVED

## ELECTRICAL SPECIFICATIONS BY LAMP TYPE

| Lamp Type | No. of Lamps | Volts | Input Watts | Input Current (Amps) | Power Factor | Crest Factor | Ballast Factor | Ballast Efficacy Factor | Max THD% |
|---|---|---|---|---|---|---|---|---|---|
| CFQ13W/G24q | 2 | 120 | 29 | 0.25 | 0.99 | <1.7 | 1.00 | 3.45 | 10 |
| | | 277 | 29 | 0.11 | 0.99 | <1.7 | 1.00 | 3.45 | 10 |
| | 1 | 120 | 16 | 0.16 | 0.96 | <1.7 | 1.00 | 6.25 | 12 |
| | | 277 | 16 | 0.06 | 0.96 | <1.7 | 1.00 | 6.25 | 12 |
| CFTR13W/GX24q | 2 | 120 | 29 | 0.25 | 0.99 | <1.7 | 1.00 | 3.45 | 10 |
| | | 277 | 29 | 0.11 | 0.99 | <1.7 | 1.00 | 3.45 | 10 |
| | 1 | 120 | 16 | 0.16 | 0.96 | <1.7 | 1.00 | 6.25 | 12 |
| | | 277 | 16 | 0.06 | 0.96 | <1.7 | 1.00 | 6.25 | 12 |
| CFQ18W/G24q | 1 | 120 | 20 | 0.17 | 0.99 | <1.7 | 1.00 | 5.00 | 10 |
| | | 277 | 20 | 0.07 | 0.97 | <1.7 | 1.00 | 5.00 | 12 |
| CFTR18W/GX24q | 1 | 120 | 20 | 0.17 | 0.99 | <1.7 | 1.00 | 5.00 | 10 |
| | | 277 | 20 | 0.07 | 0.97 | <1.7 | 1.00 | 5.00 | 12 |
| CFS10W/GR10q | 2 | 120 | 23 | 0.19 | 0.97 | <1.7 | 0.95 | 4.13 | 12 |
| | | 277 | 23 | 0.09 | 0.97 | <1.7 | 0.95 | 4.13 | 12 |
| | 1 | 120 | 13 | 0.11 | 0.96 | <1.7 | 1.05 | 8.08 | 12 |
| | | 277 | 13 | 0.05 | 0.96 | <1.7 | 1.05 | 8.08 | 12 |
| CFS16W/GR10q | 1 | 120 | 17 | 0.14 | 0.96 | <1.7 | 1.00 | 5.88 | 12 |
| | | 277 | 17 | 0.06 | 0.96 | <1.7 | 1.00 | 5.88 | 12 |
| CFT5W/2G7 | 2 | 120 | 14 | 0.11 | 0.99 | <1.7 | 1.05 | 7.50 | 10 |
| | | 277 | 14 | 0.05 | 0.99 | <1.7 | 1.05 | 7.50 | 10 |
| | 1 | 120 | 8 | 0.06 | 0.98 | <1.7 | 1.10 | 13.75 | 10 |
| | | 277 | 9 | 0.03 | 0.89 | <1.7 | 1.10 | 12.22 | 15 |
| CFT7W/2G7 | 2 | 120 | 20 | 0.14 | 0.99 | <1.7 | 1.03 | 5.15 | 10 |
| | | 277 | 16 | 0.06 | 0.97 | <1.7 | 1.03 | 6.44 | 12 |
| | 1 | 120 | 11 | 0.08 | 0.98 | <1.7 | 1.07 | 9.73 | 10 |
| | | 277 | 11 | 0.04 | 0.91 | <1.7 | 1.07 | 9.73 | 15 |
| CFT9W/2G7 | 2 | 120 | 22 | 0.18 | 0.99 | <1.7 | 1.02 | 4.64 | 10 |
| | | 277 | 21 | 0.08 | 0.97 | <1.7 | 1.02 | 4.86 | 12 |
| | 1 | 120 | 12 | 0.10 | 0.99 | <1.7 | 1.05 | 8.75 | 10 |
| | | 277 | 13 | 0.05 | 0.94 | <1.7 | 1.05 | 8.08 | 15 |

### PERFORMANCE:

-Sound Rated: A
-Minimum Starting Temperature: 0°F, -18°C
-Maximum Case Temperature: 194°F, 90°C
-Meets FCC Part 18 (Class A) Non-consumer limits
-5 Year Warranty
-Input Frequency 50Hz/60hz

### APPROVALS:

-Transient Protection Meets ANSI/IEEE C62.41 Cat A
-UL, cUL 935 listed
-Lamp end-of-life protected
-RoHS compliance

### PHYSICAL DIMENSIONS:

-Total Length (L): 5.00”
-Case Length (L2): 4.34
-Width (W): 3.00”
-Height (H): 1.38”
-Mounting (M2): 4.63”

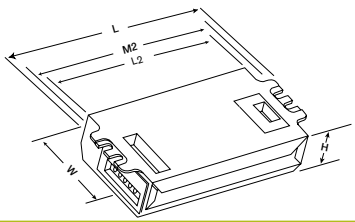


### WIRING DIAGRAM:

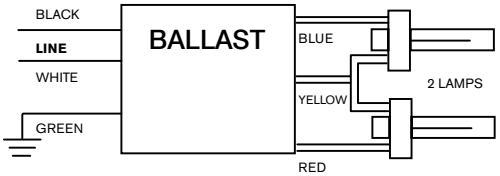


Two Lamp Applications

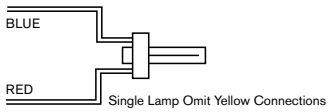


Single Lamp Applications

### Tc POINT LOCATION:

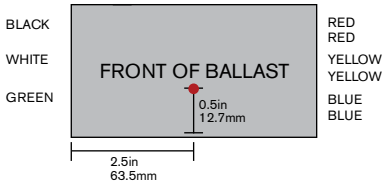

# hatch

**Part No.**
# HC213PS/UV/DJ
**For 2x13 WATT COMPACT FLUORESCENT**

## ELECTRONIC COMPACT FLUORESCENT BALLAST

| | |
|---|---|
| **Input Voltage** | 120~277Vac ± 10% |
| **Power Factor** | High |
| **Starting Method** | Programmed Start |
| **Lamp Connection** | Series |

### CERTIFICATIONS

c UL us

RoHS COMPLIANT

energy APPROVED

## ELECTRICAL SPECIFICATIONS BY LAMP TYPE

| Lamp Type | No. of Lamps | Volts | Input Watts | Input Current (Amps) | Power Factor | Crest Factor | Ballast Factor | Ballast Efficacy Factor | Max THD% |
|---|---|---|---|---|---|---|---|---|---|
| CFQ13W/G24q | 2 | 120 | 29 | 0.25 | 0.99 | <1.7 | 1.00 | 3.45 | 10 |
| | | 277 | 29 | 0.11 | 0.99 | <1.7 | 1.00 | 3.45 | 10 |
| | 1 | 120 | 16 | 0.16 | 0.96 | <1.7 | 1.00 | 6.25 | 12 |
| | | 277 | 16 | 0.06 | 0.96 | <1.7 | 1.00 | 6.25 | 12 |
| CFTR13W/GX24q | 2 | 120 | 29 | 0.25 | 0.99 | <1.7 | 1.00 | 3.45 | 10 |
| | | 277 | 29 | 0.11 | 0.99 | <1.7 | 1.00 | 3.45 | 10 |
| | 1 | 120 | 16 | 0.16 | 0.96 | <1.7 | 1.00 | 6.25 | 12 |
| | | 277 | 16 | 0.06 | 0.96 | <1.7 | 1.00 | 6.25 | 12 |
| CFQ18W/G24q | 1 | 120 | 20 | 0.17 | 0.99 | <1.7 | 1.00 | 5.00 | 10 |
| | | 277 | 20 | 0.07 | 0.97 | <1.7 | 1.00 | 5.00 | 12 |
| CFTR18W/GX24q | 1 | 120 | 20 | 0.17 | 0.99 | <1.7 | 1.00 | 5.00 | 10 |
| | | 277 | 20 | 0.07 | 0.97 | <1.7 | 1.00 | 5.00 | 12 |
| CFS10W/GR10q | 2 | 120 | 23 | 0.19 | 0.97 | <1.7 | 0.95 | 4.13 | 12 |
| | | 277 | 23 | 0.09 | 0.97 | <1.7 | 0.95 | 4.13 | 12 |
| | 1 | 120 | 13 | 0.11 | 0.96 | <1.7 | 1.05 | 8.08 | 12 |
| | | 277 | 13 | 0.05 | 0.96 | <1.7 | 1.05 | 8.08 | 12 |
| CFS16W/GR10q | 1 | 120 | 17 | 0.14 | 0.96 | <1.7 | 1.00 | 5.88 | 12 |
| | | 277 | 17 | 0.06 | 0.96 | <1.7 | 1.00 | 5.88 | 12 |
| CFT5W/2G7 | 2 | 120 | 14 | 0.11 | 0.99 | <1.7 | 1.05 | 7.50 | 10 |
| | | 277 | 14 | 0.05 | 0.99 | <1.7 | 1.05 | 7.50 | 10 |
| | 1 | 120 | 8 | 0.06 | 0.98 | <1.7 | 1.10 | 13.75 | 10 |
| | | 277 | 9 | 0.03 | 0.89 | <1.7 | 1.10 | 12.22 | 15 |
| CFT7W/2G7 | 2 | 120 | 20 | 0.14 | 0.99 | <1.7 | 1.03 | 5.15 | 10 |
| | | 277 | 16 | 0.06 | 0.97 | <1.7 | 1.03 | 6.44 | 12 |
| | 1 | 120 | 11 | 0.08 | 0.98 | <1.7 | 1.07 | 9.73 | 10 |
| | | 277 | 11 | 0.04 | 0.91 | <1.7 | 1.07 | 9.73 | 15 |
| CFT9W/2G7 | 2 | 120 | 22 | 0.18 | 0.99 | <1.7 | 1.02 | 4.64 | 10 |
| | | 277 | 21 | 0.08 | 0.97 | <1.7 | 1.02 | 4.86 | 12 |
| | 1 | 120 | 12 | 0.10 | 0.99 | <1.7 | 1.05 | 8.75 | 10 |
| | | 277 | 13 | 0.05 | 0.94 | <1.7 | 1.05 | 8.08 | 15 |

## PERFORMANCE:

-Sound Rated: A
-Minimum Starting Temperature: 0°F, -18°C
-Maximum Case Temperature: 194°F, 90°C
-Meets FCC Part 18 (Class A) Non-consumer limits
-5 Year Warranty
-Input Frequency 50Hz/60hz

## APPROVALS:

-Transient Protection Meets ANSI/IEEE C62.41 Cat A
-UL, cUL 935 listed
-Lamp end-of-life protected
-RoHS compliance

## PHYSICAL DIMENSIONS:

-Total Length (L): 5.00”
-Case Length (L2): 4.34
-Width (W): 3.00”
-Height (H): 1.38”
-Mounting (M1): 2.00”
-Mounting (M2): 4.63”

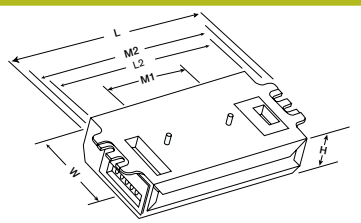


## WIRING DIAGRAM:

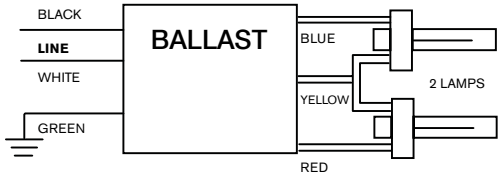


Two Lamp Applications

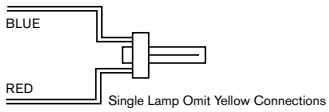


Single Lamp Applications

## $T_C$ POINT LOCATION:

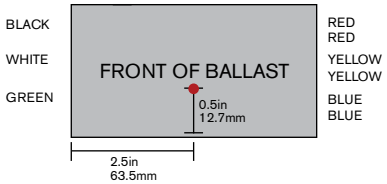

# hatch

**Part No.**
# HC218PS/UV/D
**For 2x18 WATT COMPACT FLUORESCENT**

## ELECTRONIC COMPACT FLUORESCENT BALLAST

| | |
|---|---|
| **Input Voltage** | 120~277Vac ± 10% |
| **Power Factor** | High |
| **Starting Method** | Programmed Start |
| **Lamp Connection** | Series |

### CERTIFICATIONS

c UL us

RoHS COMPLIANT

Energy APPROVED

## ELECTRICAL SPECIFICATIONS BY LAMP TYPE

| Lamp Type | No. of Lamps | Volts | Input Watts | Input Current (Amps) | Power Factor | Crest Factor | Ballast Factor | Ballast Efficacy Factor | Max THD% |
|---|---|---|---|---|---|---|---|---|---|
| CFQ18W/G24q | 2 | 120 | 35 | 0.30 | 0.99 | <1.7 | 0.95 | 2.71 | 10 |
| | | 277 | 35 | 0.13 | 0.99 | <1.7 | 0.95 | 2.71 | 10 |
| | 1 | 120 | 19 | 0.16 | 0.97 | <1.7 | 1.00 | 5.26 | 12 |
| | | 277 | 19 | 0.07 | 0.97 | <1.7 | 1.00 | 5.26 | 12 |
| CFTR18W/GX24q | 2 | 120 | 39 | 0.33 | 0.99 | <1.7 | 1.05 | 2.69 | 10 |
| | | 277 | 39 | 0.14 | 0.99 | <1.7 | 1.05 | 2.69 | 10 |
| | 1 | 120 | 20 | 0.17 | 0.97 | <1.7 | 1.05 | 5.25 | 12 |
| | | 277 | 20 | 0.08 | 0.97 | <1.7 | 1.05 | 5.25 | 12 |
| CFS21W/GR10q | 2 | 120 | 40 | 0.33 | 0.99 | <1.7 | 0.91 | 2.28 | 10 |
| | | 277 | 40 | 0.14 | 0.99 | <1.7 | 0.91 | 2.28 | 10 |
| | 1 | 120 | 20 | 0.16 | 0.97 | <1.7 | 0.90 | 4.50 | 12 |
| | | 277 | 20 | 0.07 | 0.97 | <1.7 | 0.90 | 4.50 | 12 |
| CFS16W/GR10q | 2 | 120 | 37 | 0.31 | 0.99 | <1.7 | 1.00 | 2.70 | 10 |
| | | 277 | 37 | 0.13 | 0.99 | <1.7 | 1.00 | 2.70 | 10 |
| | 1 | 120 | 27 | 0.22 | 0.99 | <1.7 | 1.10 | 4.07 | 10 |
| | | 277 | 28 | 0.10 | 0.98 | <1.7 | 1.10 | 3.93 | 10 |
| CFQ26W/G24q | 1 | 120 | 28 | 0.24 | 0.99 | <1.7 | 1.00 | 3.57 | 10 |
| | | 277 | 28 | 0.10 | 0.96 | <1.7 | 1.00 | 3.57 | 12 |
| CFTR26W/GX24q | 1 | 120 | 28 | 0.24 | 0.99 | <1.7 | 1.00 | 3.57 | 10 |
| | | 277 | 28 | 0.10 | 0.96 | <1.7 | 1.00 | 3.57 | 12 |

## PERFORMANCE:

-Sound Rated: A
-Minimum Starting Temperature: 0°F, -18°C
-Maximum Case Temperature: 194°F, 90°C
-Meets FCC Part 18 (Class A) Non-consumer limits
-5 Year Warranty
-Input Frequency 50Hz/60hz

## APPROVALS:

-Transient Protection Meets ANSI/IEEE C62.41 Cat A
-UL, cUL 935 listed
-Lamp end-of-life protected
-RoHS compliance

## PHYSICAL DIMENSIONS:

-Total Length (L): 5.00”
-Case Length (L2): 4.34”
-Width (W): 2.40”
-Height (H): 1.00”
-Mounting (M2): 4.63”

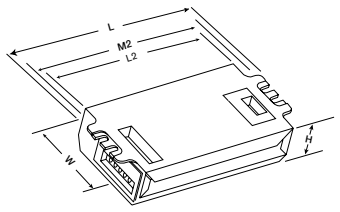


## WIRING DIAGRAM:

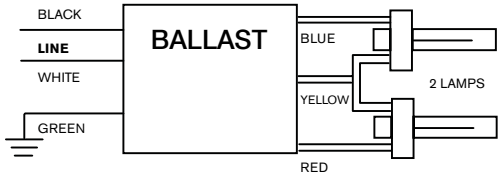


Two Lamp Applications

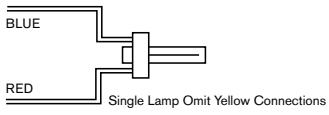


Single Lamp Applications

## $T_C$ POINT LOCATION:

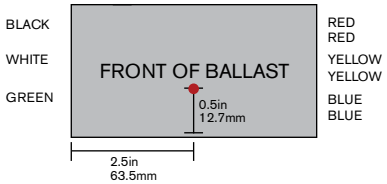

# hatch

**Part No.**
**HC218PS/UV/DJ**
**For 2x18 WATT COMPACT FLUORESCENT**

## ELECTRONIC COMPACT FLUORESCENT BALLAST

| | |
|---|---|
| **Input Voltage** | 120~277Vac ± 10% |
| **Power Factor** | High |
| **Starting Method** | Programmed Start |
| **Lamp Connection** | Series |

### CERTIFICATIONS

c UL us

RoHS COMPLIANT

energy APPROVED

## ELECTRICAL SPECIFICATIONS BY LAMP TYPE

| Lamp Type | No. of Lamps | Volts | Input Watts | Input Current (Amps) | Power Factor | Crest Factor | Ballast Factor | Ballast Efficacy Factor | Max THD% |
|---|---|---|---|---|---|---|---|---|---|
| CFQ18W/G24q | 2 | 120 | 35 | 0.30 | 0.99 | <1.7 | 0.95 | 2.71 | 10 |
| | | 277 | 35 | 0.13 | 0.99 | <1.7 | 0.95 | 2.71 | 10 |
| | 1 | 120 | 19 | 0.16 | 0.97 | <1.7 | 1.00 | 5.26 | 12 |
| | | 277 | 19 | 0.07 | 0.97 | <1.7 | 1.00 | 5.26 | 12 |
| CFTR18W/GX24q | 2 | 120 | 39 | 0.33 | 0.99 | <1.7 | 1.05 | 2.69 | 10 |
| | | 277 | 39 | 0.14 | 0.99 | <1.7 | 1.05 | 2.69 | 10 |
| | 1 | 120 | 20 | 0.17 | 0.97 | <1.7 | 1.05 | 5.25 | 12 |
| | | 277 | 20 | 0.08 | 0.97 | <1.7 | 1.05 | 5.25 | 12 |
| CFS21W/GR10q | 2 | 120 | 40 | 0.33 | 0.99 | <1.7 | 0.91 | 2.28 | 10 |
| | | 277 | 40 | 0.14 | 0.99 | <1.7 | 0.91 | 2.28 | 10 |
| | 1 | 120 | 20 | 0.16 | 0.97 | <1.7 | 0.90 | 4.50 | 12 |
| | | 277 | 20 | 0.07 | 0.97 | <1.7 | 0.90 | 4.50 | 12 |
| CFS16W/GR10q | 2 | 120 | 37 | 0.31 | 0.99 | <1.7 | 1.00 | 2.70 | 10 |
| | | 277 | 37 | 0.13 | 0.99 | <1.7 | 1.00 | 2.70 | 10 |
| | 1 | 120 | 27 | 0.22 | 0.99 | <1.7 | 1.10 | 4.07 | 10 |
| | | 277 | 28 | 0.10 | 0.98 | <1.7 | 1.10 | 3.93 | 10 |
| CFQ26W/G24q | 1 | 120 | 28 | 0.24 | 0.99 | <1.7 | 1.00 | 3.57 | 10 |
| | | 277 | 28 | 0.10 | 0.96 | <1.7 | 1.00 | 3.57 | 12 |
| CFTR26W/GX24q | 1 | 120 | 28 | 0.24 | 0.99 | <1.7 | 1.00 | 3.57 | 10 |
| | | 277 | 28 | 0.10 | 0.96 | <1.7 | 1.00 | 3.57 | 12 |

## PERFORMANCE:

-Sound Rated: A
-Minimum Starting Temperature: 0°F, -18°C
-Maximum Case Temperature: 194°F, 90°C
-Meets FCC Part 18 (Class A) Non-consumer limits
-5 Year Warranty
-Input Frequency 50Hz/60hz

## APPROVALS:

-Transient Protection Meets ANSI/IEEE C62.41 Cat A
-UL, cUL 935 listed
-Lamp end-of-life protected
-RoHS compliance

## PHYSICAL DIMENSIONS:

-Total Length (L): 5.00”
-Case Length (L2): 4.34
-Width (W): 3.00”
-Height (H): 1.38”
-Mounting (M1): 2.00”
-Mounting (M2): 4.63”

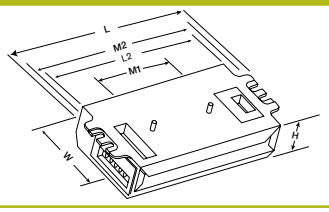


## WIRING DIAGRAM:

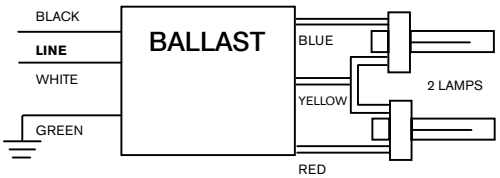


Two Lamp Applications

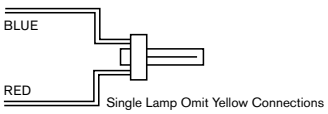


Single Lamp Applications

## $T_C$ POINT LOCATION:

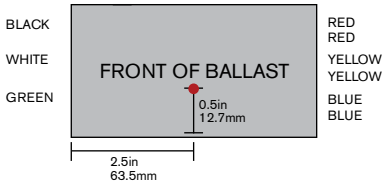

# 2 x 18 WATT CF LAMPS | HC218RS/12/WJ

## COMPACT FLUORESCENT BALLAST

| | | | | | |
|---|---|---|---|---|---|
| Ballast Type | Electronic | Starting Method | Rapid Start | Lamp Connection | Series |
| Input Voltage | 120 Vac ± 10% | Input Frequency | 50 / 60Hz | | |

## ELECTRICAL SPECIFICATIONS:

| Lamp Type | No. of Lamp | Volts | Input Watts | Input Current (Amps) | Power Factor | Crest Factor | Ballast Factor | Ballast Efficacy Factor | Max. THD % |
|---|---|---|---|---|---|---|---|---|---|
| CFQ18W/G24q<br>CFTR18W/GX24q | 2 | 120 | 35.5 | 0.53 | > 0.5 | < 1.7 | 0.88 | 2.48 | 150 |
| | 1 | 120 | 23 | 0.37 | > 0.5 | < 1.7 | 1.10 | 4.78 | 150 |
| CFS21W/GR10q | 2 | 120 | 35 | 0.53 | > 0.5 | < 1.7 | 0.80 | 2.29 | 150 |
| | 1 | 120 | 23 | 0.36 | > 0.5 | < 1.7 | 1.00 | 4.35 | 150 |
| CFQ26W/G24q<br>CFTR26W/GX24q | 1 | 120 | 25.5 | 0.40 | > 0.5 | < 1.7 | 0.88 | 3.45 | 150 |
| CFS16W/GR10q | 2 | 120 | 33.2 | 0.50 | > 0.5 | < 1.7 | 0.90 | 2.71 | 150 |
| CFS28W/GR10q | 2 | 120 | 27.5 | 0.42 | > 0.5 | < 1.7 | 0.90 | 3.27 | 150 |

## PERFORMANCE:

- Hazardous Location Approved
- Sound Rated: A
- Minimum Starting Temperature: 0ºF , -18ºC
- Maximum Case Temperature: 194ºF , 90ºC
- Meets FCC Part 18 (Class B) Consumer Limits
- Lamp end-of-life protected
- 3-Year Warranty

## APPROVALS:

- UL, cUL 935 listed
- Transient Protection meets ANSI/IEEE C62.41 Cat. A

RoHS COMPLIANT

## PHYSICAL DIMENSIONS:

Length (L): 4.00"
Width (W): 1.87"
Height (H): 1.19"

Mounting(M1): 3.58"
(M2): 2.00"
(M3): 0.63

Options: also available versions
- without studs
- bottom lead exit

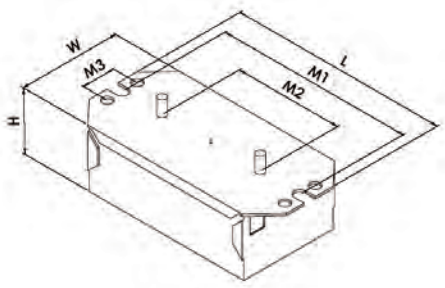


## WIRING DIAGRAM:

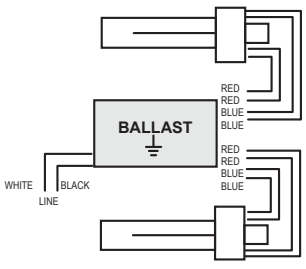


## HOT SPOT LOCATION:

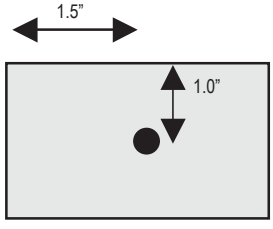

# hatch

**Part No.**
# HC226PS/UV/D
**For 2x26 WATT COMPACT FLUORESCENT**

## ELECTRONIC COMPACT FLUORESCENT BALLAST

| | |
|---|---|
| **Input Voltage** | 120~277Vac ± 10% |
| **Power Factor** | High |
| **Starting Method** | Programmed Start |
| **Lamp Connection** | Series |

### CERTIFICATIONS

c UL us — RoHS COMPLIANT — energy APPROVED

## ELECTRICAL SPECIFICATIONS BY LAMP TYPE

| Lamp Type | No. of Lamps | Volts | Input Watts | Input Current (Amps) | Power Factor | Crest Factor | Ballast Factor | Ballast Efficacy Factor | Max THD% |
|---|---|---|---|---|---|---|---|---|---|
| CFQ26W/G24q | 2 | 120 | 51 | 0.43 | 0.99 | <1.7 | 1.00 | 1.96 | 10 |
| | | 277 | 51 | 0.19 | 0.99 | <1.7 | 1.00 | 1.96 | 10 |
| | 1 | 120 | 27 | 0.23 | 0.98 | <1.7 | 1.00 | 3.70 | 10 |
| | | 277 | 27 | 0.10 | 0.98 | <1.7 | 1.00 | 3.70 | 10 |
| CFTR26W/GX24q | 2 | 120 | 54 | 0.45 | 0.99 | <1.7 | 1.00 | 1.85 | 10 |
| | | 277 | 54 | 0.20 | 0.99 | <1.7 | 1.00 | 1.85 | 10 |
| | 1 | 120 | 29 | 0.24 | 0.98 | <1.7 | 1.10 | 3.79 | 10 |
| | | 277 | 29 | 0.11 | 0.98 | <1.7 | 1.10 | 3.79 | 10 |
| CFS21W/GR10q | 2 | 120 | 51 | 0.42 | 0.99 | <1.7 | 1.12 | 2.20 | 10 |
| | | 277 | 51 | 0.18 | 0.99 | <1.7 | 1.12 | 2.20 | 10 |
| CFTR42W/GX24q | 1 | 120 | 46 | 0.38 | 0.98 | <1.7 | 0.98 | 2.13 | 10 |
| | | 277 | 46 | 0.17 | 0.98 | <1.7 | 0.98 | 2.13 | 10 |
| CFTR32W/GX24q | 1 | 120 | 36 | 0.31 | 0.98 | <1.7 | 0.98 | 2.72 | 10 |
| | | 277 | 36 | 0.13 | 0.98 | <1.7 | 0.98 | 2.72 | 10 |
| CFTR57W/GX24q | 1 | 120 | 54 | 0.45 | 0.99 | <1.7 | 0.88 | 1.63 | 10 |
| | | 277 | 53 | 0.19 | 0.98 | <1.7 | 0.88 | 1.66 | 10 |
| CFQ57W/G24q | 1 | 120 | 59 | 0.49 | 0.99 | <1.7 | 0.88 | 1.49 | 10 |
| | | 277 | 56 | 0.20 | 0.99 | <1.7 | 0.88 | 1.57 | 10 |
| CFS28W/GR10q | 2 | 120 | 33 | 0.27 | 0.98 | <1.7 | 1.00 | 3.03 | 10 |
| | | 277 | 32 | 0.12 | 0.96 | <1.7 | 1.00 | 3.13 | 12 |
| CFS38W/GR10q | 1 | 120 | 34 | 0.29 | 0.99 | <1.7 | 0.80 | 2.35 | 10 |
| | | 277 | 32 | 0.14 | 0.97 | <1.7 | 0.80 | 2.50 | 12 |
| FT24W/2G11 | 2 | 120 | 48 | 0.41 | 0.99 | <1.7 | 0.93 | 1.94 | 10 |
| | | 277 | 48 | 0.18 | 0.99 | <1.7 | 0.93 | 1.94 | 10 |
| | 1 | 120 | 26 | 0.21 | 0.99 | <1.7 | 0.93 | 3.58 | 10 |
| | | 277 | 27 | 0.10 | 0.96 | <1.7 | 0.93 | 3.44 | 12 |
| FT18W/2G11 | 2 | 120 | 36 | 0.30 | 0.99 | <1.7 | 0.93 | 2.58 | 10 |
| | | 277 | 36 | 0.13 | 0.97 | <1.7 | 0.93 | 2.58 | 12 |
| FT40W/2G11 | 1 | 120 | 44 | 0.36 | 0.99 | <1.7 | 0.90 | 2.05 | 10 |
| | | 277 | 44 | 0.16 | 0.98 | <1.7 | 0.90 | 2.05 | 10 |
| FT39W/2G11 | 1 | 120 | 42 | 0.35 | 0.99 | <1.7 | 0.90 | 2.14 | 10 |
| | | 277 | 41 | 0.15 | 0.98 | <1.7 | 0.90 | 2.20 | 10 |
| FT36W/2G11 | 1 | 120 | 32 | 0.26 | 0.99 | <1.7 | 0.82 | 2.56 | 10 |
| | | 277 | 32 | 0.12 | 0.97 | <1.7 | 0.82 | 2.56 | 12 |
| FC16T9/G10q | 1 | 277 | 43 | 0.36 | 0.99 | <1.7 | 1.00 | 2.33 | 10 |
| | | 120 | 43 | 0.16 | 0.97 | <1.7 | 1.00 | 2.33 | 12 |
| FC12T5/2GX13 | 1 | 120 | 39 | 0.33 | 0.99 | <1.7 | 1.00 | 2.56 | 10 |
| | | 277 | 41 | 0.15 | 0.98 | <1.7 | 1.00 | 2.44 | 10 |
| FC9T5/2GX13 | 1 | 120 | 28 | 0.23 | 0.99 | <1.7 | 1.01 | 3.61 | 10 |
| | | 277 | 28 | 0.10 | 0.97 | <1.7 | 1.01 | 3.61 | 12 |

## PERFORMANCE:

-Sound Rated: A
-Minimum Starting Temperature: 0°F, -18°C
-Maximum Case Temperature: 194°F, 90°C
-Meets FCC Part 18 (Class A) Non-consumer limits
-5 Year Warranty
-Input Frequency 50Hz/60hz

## APPROVALS:

-Transient Protection Meets ANSI/IEEE C62.41 Cat A
-UL, cUL 935 listed
-Lamp end-of-life protected
-RoHS compliance

## PHYSICAL DIMENSIONS:

-Total Length (L): 5.00”
-Case Length (L2): 4.34”
-Width (W): 2.40”
-Height (H): 1.00”
-Mounting (M2): 4.63”

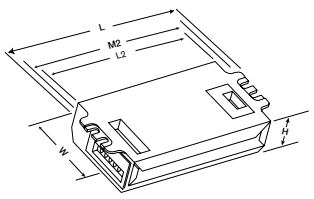


## WIRING DIAGRAM:

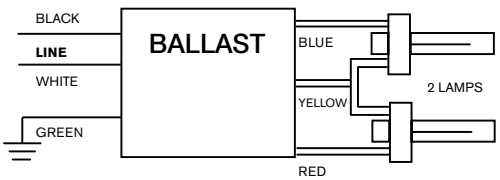


Two Lamp Applications

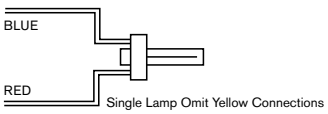


Single Lamp Applications

## $T_C$ POINT LOCATION:

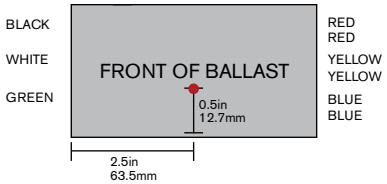

# hatch

**Part No.**
# HC226PS/UV/DJ
**For 2x26 WATT COMPACT FLUORESCENT**

## ELECTRONIC COMPACT FLUORESCENT BALLAST

| | |
|---|---|
| **Input Voltage** | 120~277Vac ± 10% |
| **Power Factor** | High |
| **Starting Method** | Programmed Start |
| **Lamp Connection** | Series |

### CERTIFICATIONS

c UL us

RoHS COMPLIANT

Energy Star APPROVED

## ELECTRICAL SPECIFICATIONS BY LAMP TYPE

| Lamp Type | No. of Lamps | Volts | Input Watts | Input Current (Amps) | Power Factor | Crest Factor | Ballast Factor | Ballast Efficacy Factor | Max THD% |
|---|---|---|---|---|---|---|---|---|---|
| CFQ26W/G24q | 2 | 120 | 51 | 0.43 | 0.99 | <1.7 | 1.00 | 1.96 | 10 |
| | | 277 | 51 | 0.19 | 0.99 | <1.7 | 1.00 | 1.96 | 10 |
| | 1 | 120 | 27 | 0.23 | 0.98 | <1.7 | 1.00 | 3.70 | 10 |
| | | 277 | 27 | 0.10 | 0.98 | <1.7 | 1.00 | 3.70 | 10 |
| CFTR26W/GX24q | 2 | 120 | 54 | 0.45 | 0.99 | <1.7 | 1.00 | 1.85 | 10 |
| | | 277 | 54 | 0.20 | 0.99 | <1.7 | 1.00 | 1.85 | 10 |
| | 1 | 120 | 29 | 0.24 | 0.98 | <1.7 | 1.10 | 3.79 | 10 |
| | | 277 | 29 | 0.11 | 0.98 | <1.7 | 1.10 | 3.79 | 10 |
| CFS21W/GR10q | 2 | 120 | 51 | 0.42 | 0.99 | <1.7 | 1.12 | 2.20 | 10 |
| | | 277 | 51 | 0.18 | 0.99 | <1.7 | 1.12 | 2.20 | 10 |
| CFTR42W/GX24q | 1 | 120 | 46 | 0.38 | 0.98 | <1.7 | 0.98 | 2.13 | 10 |
| | | 277 | 46 | 0.17 | 0.98 | <1.7 | 0.98 | 2.13 | 10 |
| CFTR32W/GX24q | 1 | 120 | 36 | 0.31 | 0.98 | <1.7 | 0.98 | 2.72 | 10 |
| | | 277 | 36 | 0.13 | 0.98 | <1.7 | 0.98 | 2.72 | 10 |
| CFTR57W/GX24q | 1 | 120 | 54 | 0.45 | 0.99 | <1.7 | 0.88 | 1.63 | 10 |
| | | 277 | 53 | 0.19 | 0.98 | <1.7 | 0.88 | 1.66 | 10 |
| CFQ57W/G24q | 1 | 120 | 59 | 0.49 | 0.99 | <1.7 | 0.88 | 1.49 | 10 |
| | | 277 | 56 | 0.20 | 0.99 | <1.7 | 0.88 | 1.57 | 10 |
| CFS28W/GR10q | 2 | 120 | 33 | 0.27 | 0.98 | <1.7 | 1.00 | 3.03 | 10 |
| | | 277 | 32 | 0.12 | 0.96 | <1.7 | 1.00 | 3.13 | 12 |
| CFS38W/GR10q | 1 | 120 | 34 | 0.29 | 0.99 | <1.7 | 0.80 | 2.35 | 10 |
| | | 277 | 32 | 0.14 | 0.97 | <1.7 | 0.80 | 2.50 | 12 |
| FT24W/2G11 | 2 | 120 | 48 | 0.41 | 0.99 | <1.7 | 0.93 | 1.94 | 10 |
| | | 277 | 48 | 0.18 | 0.99 | <1.7 | 0.93 | 1.94 | 10 |
| | 1 | 120 | 26 | 0.21 | 0.99 | <1.7 | 0.93 | 3.58 | 10 |
| | | 277 | 27 | 0.10 | 0.96 | <1.7 | 0.93 | 3.44 | 12 |
| FT18W/2G11 | 2 | 120 | 36 | 0.30 | 0.99 | <1.7 | 0.93 | 2.58 | 10 |
| | | 277 | 36 | 0.13 | 0.97 | <1.7 | 0.93 | 2.58 | 12 |
| FT40W/2G11 | 1 | 120 | 44 | 0.36 | 0.99 | <1.7 | 0.90 | 2.05 | 10 |
| | | 277 | 44 | 0.16 | 0.98 | <1.7 | 0.90 | 2.05 | 10 |
| FT39W/2G11 | 1 | 120 | 42 | 0.35 | 0.99 | <1.7 | 0.90 | 2.14 | 10 |
| | | 277 | 41 | 0.15 | 0.98 | <1.7 | 0.90 | 2.20 | 10 |
| FT36W/2G11 | 1 | 120 | 32 | 0.26 | 0.99 | <1.7 | 0.82 | 2.56 | 10 |
| | | 277 | 32 | 0.12 | 0.97 | <1.7 | 0.82 | 2.56 | 12 |
| FC16T9/G10q | 1 | 277 | 43 | 0.36 | 0.99 | <1.7 | 1.00 | 2.33 | 10 |
| | | 120 | 43 | 0.16 | 0.97 | <1.7 | 1.00 | 2.33 | 12 |
| FC12T5/2GX13 | 1 | 120 | 39 | 0.33 | 0.99 | <1.7 | 1.00 | 2.56 | 10 |
| | | 277 | 41 | 0.15 | 0.98 | <1.7 | 1.00 | 2.44 | 10 |
| FC9T5/2GX13 | 1 | 120 | 28 | 0.23 | 0.99 | <1.7 | 1.01 | 3.61 | 10 |
| | | 277 | 28 | 0.10 | 0.97 | <1.7 | 1.01 | 3.61 | 12 |

## PERFORMANCE:

-Sound Rated: A
-Minimum Starting Temperature: 0°F, -18°C
-Maximum Case Temperature: 194°F, 90°C
-Meets FCC Part 18 (Class A) Non-consumer limits
-5 Year Warranty
-Input Frequency 50Hz/60hz

## APPROVALS:

-Transient Protection Meets ANSI/IEEE C62.41 Cat A
-UL, cUL 935 listed
-Lamp end-of-life protected
-RoHS compliance

## PHYSICAL DIMENSIONS:

-Total Length (L): 5.00”
-Case Length (L2): 4.34
-Width (W): 3.00”
-Height (H): 1.38”
-Mounting (M1): 2.00”
-Mounting (M2): 4.63”

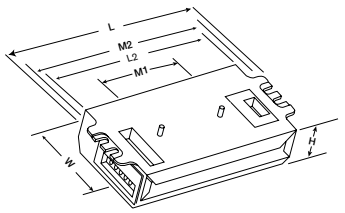


## WIRING DIAGRAM:

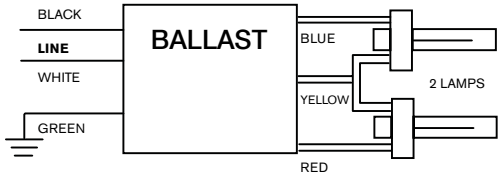


Two Lamp Applications

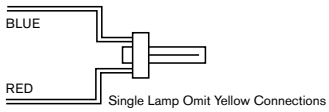


Single Lamp Applications

## $T_C$ POINT LOCATION:

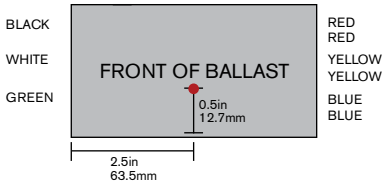

# hatch

**Part No.**
# HC226PS/UV/WJ
**For 2x26 WATT COMPACT FLUORESCENT**

## ELECTRONIC COMPACT FLUORESCENT BALLAST

| | |
|---|---|
| **Input Voltage** | 120~277Vac ± 10% |
| **Power Factor** | High |
| **Starting Method** | Programmed Start |
| **Lamp Connection** | Series |

### CERTIFICATIONS

c UL us

RoHS COMPLIANT

energy APPROVED

## ELECTRICAL SPECIFICATIONS BY LAMP TYPE

| Lamp Type | No. of Lamps | Volts | Input Watts | Input Current (Amps) | Power Factor | Crest Factor | Ballast Factor | Ballast Efficacy Factor | Max THD% |
|---|---|---|---|---|---|---|---|---|---|
| CFQ26W/G24q | 2 | 120 | 51 | 0.43 | 0.99 | <1.7 | 1.00 | 1.96 | 10 |
| | | 277 | 51 | 0.19 | 0.99 | <1.7 | 1.00 | 1.96 | 10 |
| | 1 | 120 | 27 | 0.23 | 0.98 | <1.7 | 1.00 | 3.70 | 10 |
| | | 277 | 27 | 0.10 | 0.98 | <1.7 | 1.00 | 3.70 | 10 |
| CFTR26W/GX24q | 2 | 120 | 54 | 0.45 | 0.99 | <1.7 | 1.00 | 1.85 | 10 |
| | | 277 | 54 | 0.20 | 0.99 | <1.7 | 1.00 | 1.85 | 10 |
| | 1 | 120 | 29 | 0.24 | 0.98 | <1.7 | 1.10 | 3.79 | 10 |
| | | 277 | 29 | 0.11 | 0.98 | <1.7 | 1.10 | 3.79 | 10 |
| CFS21W/GR10q | 2 | 120 | 51 | 0.42 | 0.99 | <1.7 | 1.12 | 2.20 | 10 |
| | | 277 | 51 | 0.18 | 0.99 | <1.7 | 1.12 | 2.20 | 10 |
| CFTR42W/GX24q | 1 | 120 | 46 | 0.38 | 0.98 | <1.7 | 0.98 | 2.13 | 10 |
| | | 277 | 46 | 0.17 | 0.98 | <1.7 | 0.98 | 2.13 | 10 |
| CFTR32W/GX24q | 1 | 120 | 36 | 0.31 | 0.98 | <1.7 | 0.98 | 2.72 | 10 |
| | | 277 | 36 | 0.13 | 0.98 | <1.7 | 0.98 | 2.72 | 10 |
| CFTR57W/GX24q | 1 | 120 | 54 | 0.45 | 0.99 | <1.7 | 0.88 | 1.63 | 10 |
| | | 277 | 53 | 0.19 | 0.98 | <1.7 | 0.88 | 1.66 | 10 |
| CFQ57W/G24q | 1 | 120 | 59 | 0.49 | 0.99 | <1.7 | 0.88 | 1.49 | 10 |
| | | 277 | 56 | 0.20 | 0.99 | <1.7 | 0.88 | 1.57 | 10 |
| CFS28W/GR10q | 2 | 120 | 33 | 0.27 | 0.98 | <1.7 | 1.00 | 3.03 | 10 |
| | | 277 | 32 | 0.12 | 0.96 | <1.7 | 1.00 | 3.13 | 12 |
| CFS38W/GR10q | 1 | 120 | 34 | 0.29 | 0.99 | <1.7 | 0.80 | 2.35 | 10 |
| | | 277 | 32 | 0.14 | 0.97 | <1.7 | 0.80 | 2.50 | 12 |
| FT24W/2G11 | 2 | 120 | 48 | 0.41 | 0.99 | <1.7 | 0.93 | 1.94 | 10 |
| | | 277 | 48 | 0.18 | 0.99 | <1.7 | 0.93 | 1.94 | 10 |
| | 1 | 120 | 26 | 0.21 | 0.99 | <1.7 | 0.93 | 3.58 | 10 |
| | | 277 | 27 | 0.10 | 0.96 | <1.7 | 0.93 | 3.44 | 12 |
| FT18W/2G11 | 2 | 120 | 36 | 0.30 | 0.99 | <1.7 | 0.93 | 2.58 | 10 |
| | | 277 | 36 | 0.13 | 0.97 | <1.7 | 0.93 | 2.58 | 12 |
| FT40W/2G11 | 1 | 120 | 44 | 0.36 | 0.99 | <1.7 | 0.90 | 2.05 | 10 |
| | | 277 | 44 | 0.16 | 0.98 | <1.7 | 0.90 | 2.05 | 10 |
| FT39W/2G11 | 1 | 120 | 42 | 0.35 | 0.99 | <1.7 | 0.90 | 2.14 | 10 |
| | | 277 | 41 | 0.15 | 0.98 | <1.7 | 0.90 | 2.20 | 10 |
| FT36W/2G11 | 1 | 120 | 32 | 0.26 | 0.99 | <1.7 | 0.82 | 2.56 | 10 |
| | | 277 | 32 | 0.12 | 0.97 | <1.7 | 0.82 | 2.56 | 12 |
| FC16T9/G10q | 1 | 277 | 43 | 0.36 | 0.99 | <1.7 | 1.00 | 2.33 | 10 |
| | | 120 | 43 | 0.16 | 0.97 | <1.7 | 1.00 | 2.33 | 12 |
| FC12T5/2GX13 | 1 | 120 | 39 | 0.33 | 0.99 | <1.7 | 1.00 | 2.56 | 10 |
| | | 277 | 41 | 0.15 | 0.98 | <1.7 | 1.00 | 2.44 | 10 |
| FC9T5/2GX13 | 1 | 120 | 28 | 0.23 | 0.99 | <1.7 | 1.01 | 3.61 | 10 |
| | | 277 | 28 | 0.10 | 0.97 | <1.7 | 1.01 | 3.61 | 12 |

## PERFORMANCE:

-Sound Rated: A
-Minimum Starting Temperature: -22°F, -30°C
-Maximum Case Temperature: 194°F, 90°C
-Meets FCC Part 18 (Class A) Non-consumer limits
-5 Year Warranty
-Input Frequency 50Hz/60hz

## APPROVALS:

-Transient Protection Meets ANSI/IEEE C62.41 Cat A
-UL, cUL 935 listed
-Lamp end-of-life protected
-RoHS compliance

## PHYSICAL DIMENSIONS:

-Length (L): 4.34"
-Width (W): 2.40"
-Height (H): 1.00"
-Mounting (M2): 4.63"

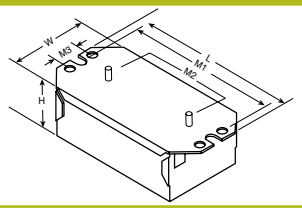


## WIRING DIAGRAM:

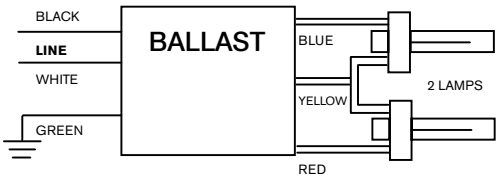


Two Lamp Applications

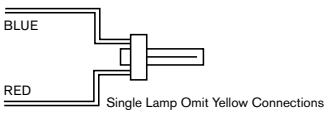


Single Lamp Applications

## $T_C$ POINT LOCATION:

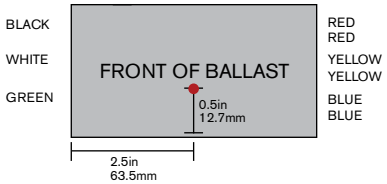

# hatch

**Part No.**
**HC226RS/12/DJ**
**For 2x26 WATT COMPACT FLUORESCENT**

## ELECTRONIC COMPACT FLUORESCENT BALLAST

| | |
|---|---|
| **Input Voltage** | 120~277Vac ± 10% |
| **Ballast Factor** | Normal |
| **Starting Method** | Rapid Start |
| **Lamp Connection** | Series |

### CERTIFICATIONS

c UL us

RoHS COMPLIANT

energy APPROVED

## ELECTRICAL SPECIFICATIONS BY LAMP TYPE

| Lamp Type | No. of Lamps | Volts | Input Watts | Input Current (Amps) | Power Factor | Crest Factor | Ballast Factor | Ballast Efficacy Factor | Max THD% |
|---|---|---|---|---|---|---|---|---|---|
| CFQ26W/G24q | 2 | 120 | 53.0 | 0.45 | 0.99 | 1.57 | 0.95 | 1.79 | 10 |
| | 1 | 120 | 33.0 | 0.27 | 0.99 | 1.58 | 1.10 | 3.33 | 12 |
| CFTR26W/GX24q | 2 | 120 | 53.0 | 0.45 | 0.99 | 1.57 | 0.95 | 1.79 | 10 |
| | 1 | 120 | 33.0 | 0.27 | 0.99 | 1.58 | 1.10 | 3.33 | 12 |
| F24T5 HO | 2 | 120 | 51.0 | 0.44 | 0.99 | 1.47 | 1.00 | 1.96 | 10 |
| CFTR32W/GX24q | 1 | 120 | 41.0 | 0.35 | 0.99 | 1.53 | 1.20 | 2.93 | 10 |
| CFTR42W/GX24q | 1 | 120 | 49.0 | 0.42 | 0.99 | 1.48 | 1.10 | 2.24 | 10 |
| FC16T9 | 1 | 120 | 43.0 | 0.36 | 0.99 | 1.46 | 1.00 | 2.33 | 10 |

### PERFORMANCE:

-Sound Rated: A
-Minimum Starting Temperature: 0°F, -18°C
-Maximum Case Temperature: 167°F, 75°C
-Meets FCC Part 18 (Class B) Consumer Limits
-3 Year Warranty
-Input Frequency: 50Hz/60Hz

### APPROVALS:

-Transient Protection Meets ANSI/IEEE C62.41 Cat A
-UL, cUL 935 listed
-Lamp end-of-life protected

### PHYSICAL DIMENSIONS:

-Length (L): 4.34”
-Width (W): 2.40”
-Height (H): 1.00”
-Mounting (M): 4.63”

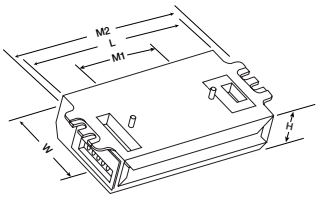


### WIRING DIAGRAM:

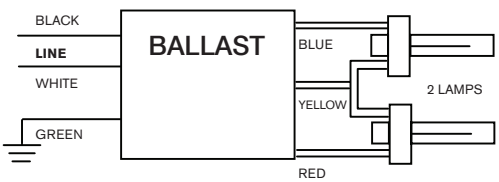


Two Lamp Applications

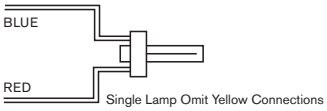


Single Lamp Applications

### $T_C$ POINT LOCATION:

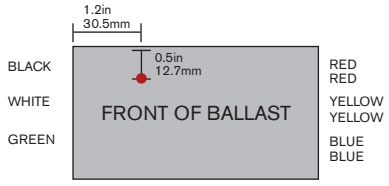

# HATCH

**PART NO.**
**HC242PS/UV/D**
**For 2x42 WATT COMPACT FLUORESCENT**

## ELECTRONIC COMPACT FLUORESCENT BALLAST

| | |
|---|---|
| **Input Voltage** | 120~277Vac ± 10% |
| **Ballast Factor** | Normal |
| **Starting Method** | Programmed Start |
| **Lamp Connection** | Series |

### CERTIFICATIONS

c UL us

RoHS COMPLIANT

energy APPROVED

## ELECTRICAL SPECIFICATIONS BY LAMP TYPE

| Lamp Type | No. of Lamps | Volts | Input Watts | Input Current (Amps) | Power Factor | Crest Factor | Ballast Factor | Ballast Efficacy Factor | Max THD% |
|---|---|---|---|---|---|---|---|---|---|
| CFTR42W/GX24q | 2 | 120 | 94 | 0.77 | 0.99 | <1.7 | 1.00 | 1.06 | 10 |
| | | 277 | 93 | 0.38 | 0.98 | <1.7 | 1.00 | 1.08 | 10 |
| | 1 | 120 | 47 | 0.40 | 0.99 | <1.7 | 1.00 | 2.13 | 10 |
| | | 277 | 47 | 0.18 | 0.96 | <1.7 | 1.00 | 2.13 | 12 |
| CFTR32W/GX24q | 2 | 120 | 63 | 0.53 | 0.99 | <1.7 | 0.95 | 1.51 | 10 |
| | | 277 | 63 | 0.23 | 0.98 | <1.7 | 0.95 | 1.51 | 10 |
| | 1 | 120 | 42 | 0.35 | 0.99 | <1.7 | 0.96 | 2.29 | 10 |
| | | 277 | 42 | 0.13 | 0.96 | <1.7 | 0.96 | 2.29 | 12 |
| CFQ26W/G24q CFTR26W/GX24q | 2 | 120 | 54 | 0.45 | 0.99 | <1.7 | 0.90 | 1.67 | 10 |
| | | 277 | 54 | 0.21 | 0.97 | <1.7 | 0.90 | 1.67 | 12 |
| | 1 | 120 | 32 | 0.27 | 0.99 | <1.7 | 1.00 | 3.13 | 10 |
| | | 277 | 32 | 0.13 | 0.95 | <1.7 | 1.00 | 3.13 | 15 |
| CFS28W/GR10q | 2 | 120 | 61 | 0.53 | 0.99 | <1.7 | 0.98 | 1.61 | 10 |
| | | 277 | 61 | 0.23 | 0.97 | <1.7 | 0.98 | 1.61 | 12 |
| | 1 | 120 | 34 | 0.29 | 0.99 | <1.7 | 1.00 | 2.94 | 10 |
| | | 277 | 34 | 0.14 | 0.93 | <1.7 | 1.00 | 2.94 | 15 |
| CFM36W/2G10 | 2 | 120 | 62 | 0.52 | 0.99 | <1.7 | 0.78 | 1.26 | 10 |
| | | 277 | 61 | 0.23 | 0.97 | <1.7 | 0.78 | 1.28 | 12 |
| | 1 | 120 | 33 | 0.28 | 0.99 | <1.7 | 0.81 | 2.45 | 10 |
| | | 277 | 33 | 0.13 | 0.94 | <1.7 | 0.81 | 2.45 | 15 |
| FT40W/2G11 | 2 | 120 | 82 | 0.69 | 0.99 | <1.7 | 0.95 | 1.16 | 10 |
| | | 277 | 82 | 0.30 | 0.98 | <1.7 | 0.95 | 1.16 | 10 |
| | 1 | 120 | 45 | 0.37 | 0.99 | <1.7 | 1.00 | 2.22 | 10 |
| | | 277 | 45 | 0.17 | 0.96 | <1.7 | 1.00 | 2.22 | 12 |
| FT39W/2G11 | 2 | 120 | 82 | 0.69 | 0.99 | <1.7 | 0.95 | 1.16 | 10 |
| | | 277 | 82 | 0.30 | 0.98 | <1.7 | 0.95 | 1.16 | 10 |
| | 1 | 120 | 45 | 0.37 | 0.99 | <1.7 | 1.00 | 2.22 | 10 |
| | | 277 | 45 | 0.17 | 0.96 | <1.7 | 1.00 | 2.22 | 12 |
| FT36W/2G11 | 2 | 120 | 66 | 0.55 | 0.99 | <1.7 | 0.80 | 1.21 | 10 |
| | | 277 | 65 | 0.24 | 0.98 | <1.7 | 0.80 | 1.23 | 10 |
| | 1 | 120 | 37 | 0.31 | 0.99 | <1.7 | 0.88 | 2.38 | 10 |
| | | 277 | 37 | 0.14 | 0.95 | <1.7 | 0.88 | 2.38 | 12 |
| FT24W/2G11 | 2 | 120 | 54 | 0.45 | 0.99 | <1.7 | 1.00 | 1.85 | 10 |
| | | 277 | 54 | 0.20 | 0.97 | <1.7 | 1.00 | 1.85 | 12 |
| | 1 | 120 | 27 | 0.22 | 0.99 | <1.7 | 1.00 | 3.70 | 10 |
| | | 277 | 28 | 0.11 | 0.92 | <1.7 | 1.00 | 3.57 | 15 |
| FT55W/2G11 | 1 | 120 | 44 | 0.37 | 0.99 | <1.7 | 0.70 | 1.59 | 10 |
| | | 277 | 44 | 0.17 | 0.96 | <1.7 | 0.70 | 1.59 | 12 |

# hatch

**Part No.**
**HC242PS/UV/D**
**For 2x42 WATT COMPACT FLUORESCENT**

## ELECTRONIC COMPACT FLUORESCENT BALLAST

| | |
|---|---|
| **Input Voltage** | 120~277Vac ± 10% |
| **Power Factor** | High |
| **Starting Method** | Programmed Start |
| **Lamp Connection** | Series |

### CERTIFICATIONS

c UL us

RoHS COMPLIANT

energy APPROVED

## ELECTRICAL SPECIFICATIONS BY LAMP TYPE

| Lamp Type | No. of Lamps | Volts | Input Watts | Input Current (Amps) | Power Factor | Crest Factor | Ballast Factor | Ballast Efficacy Factor | Max THD% |
|---|---|---|---|---|---|---|---|---|---|
| CFS55W/GRY10q-3 | 1 | 120 | 34 | 0.29 | 0.99 | <1.7 | 0.60 | 1.76 | 10 |
| | | 277 | 33 | 0.13 | 0.94 | <1.7 | 0.60 | 1.82 | 15 |
| FC9T5 22W | 2 | 120 | 52 | 0.44 | 0.99 | <1.7 | 1.10 | 2.12 | 10 |
| | | 277 | 52 | 0.19 | 0.97 | <1.7 | 1.10 | 2.12 | 12 |
| | 1 | 120 | 25 | 0.21 | 0.99 | <1.7 | 1.05 | 4.20 | 10 |
| | | 277 | 26 | 0.10 | 0.92 | <1.7 | 1.05 | 4.04 | 15 |
| FC12T5 40W | 2 | 120 | 77 | 0.64 | 0.99 | <1.7 | 0.86 | 1.12 | 10 |
| | | 277 | 77 | 0.28 | 0.98 | <1.7 | 0.86 | 1.12 | 10 |
| | 1 | 120 | 39 | 0.33 | 0.99 | <1.7 | 0.86 | 2.21 | 10 |
| | | 277 | 40 | 0.15 | 0.95 | <1.7 | 0.86 | 2.15 | 15 |
| CFTR57W/GX24q | 1 | 120 | 58 | 0.49 | 0.99 | <1.7 | 1.00 | 1.72 | 10 |
| | | 277 | 58 | 0.22 | 0.97 | <1.7 | 1.00 | 1.72 | 12 |
| CFTR70W/GX24q | 1 | 277 | 73 | 0.61 | 0.99 | <1.7 | 1.00 | 1.37 | 10 |
| | | 120 | 73 | 0.27 | 0.97 | <1.7 | 1.00 | 1.37 | 12 |
| FC9T5+FC12T5 | 1+1 | 120 | 67 | 0.55 | 0.99 | <1.7 | 0.90 | 1.34 | 10 |
| | | 277 | 67 | 0.25 | 0.98 | <1.7 | 0.90 | 1.34 | 10 |

## PERFORMANCE:

-Sound Rated: A
-Minimum Starting Temperature: 0°F, -18°C
-Maximum Case Temperature: 194°F, 90°C
-Meets FCC Part 18 (Class A) Non-consumer limits
-5 Year Warranty
-Input Frequency 50Hz/60hz
-Ballast frequency for all listed lamps: >40kHz

## APPROVALS:

-HL Type - Hazardous Location
-Transient Protection Meets ANSI/IEEE C62.41 Cat A
-UL, cUL 935 listed
-RoHS compliance

## PHYSICAL DIMENSIONS:

-Total Length (L): 5.00”
-Case Length (L2): 4.34
-Width (W): 3.00”
-Height (H): 1.38”
-Mounting (M2): 4.63”

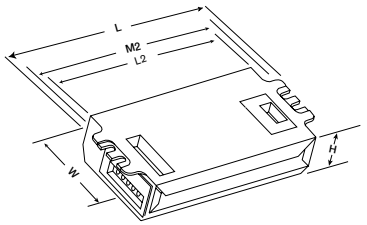


## WIRING DIAGRAM:

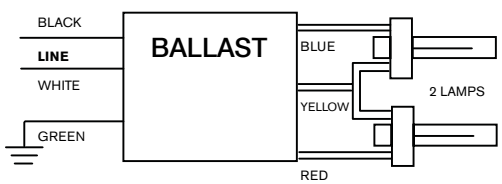


Two Lamp Applications

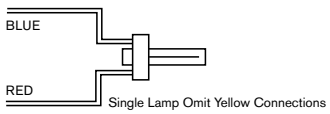


Single Lamp Applications

## $T_C$ POINT LOCATION:

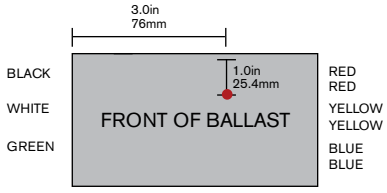

# HATCH

**PART NO.**
**HC242PS/UV/DJ**
**For 2x42 WATT COMPACT FLUORESCENT**

## ELECTRONIC COMPACT FLUORESCENT BALLAST

| | |
|---|---|
| **Input Voltage** | 120~277Vac ± 10% |
| **Power Factor** | High |
| **Starting Method** | Programmed Start |
| **Lamp Connection** | Series |

### CERTIFICATIONS

c UL us

RoHS COMPLIANT

energy APPROVED

## ELECTRICAL SPECIFICATIONS BY LAMP TYPE

| Lamp Type | No. of Lamps | Volts | Input Watts | Input Current (Amps) | Power Factor | Crest Factor | Ballast Factor | Ballast Efficacy Factor | Max THD% |
|---|---|---|---|---|---|---|---|---|---|
| CFTR42W/GX24q | 2 | 120 | 94 | 0.77 | 0.99 | <1.7 | 1.00 | 1.06 | 10 |
| | | 277 | 93 | 0.38 | 0.98 | <1.7 | 1.00 | 1.08 | 10 |
| | 1 | 120 | 47 | 0.40 | 0.99 | <1.7 | 1.00 | 2.13 | 10 |
| | | 277 | 47 | 0.18 | 0.96 | <1.7 | 1.00 | 2.13 | 12 |
| CFTR32W/GX24q | 2 | 120 | 63 | 0.53 | 0.99 | <1.7 | 0.95 | 1.51 | 10 |
| | | 277 | 63 | 0.23 | 0.98 | <1.7 | 0.95 | 1.51 | 10 |
| | 1 | 120 | 42 | 0.35 | 0.99 | <1.7 | 0.96 | 2.29 | 10 |
| | | 277 | 42 | 0.13 | 0.96 | <1.7 | 0.96 | 2.29 | 12 |
| CFQ26W/G24q CFTR26W/GX24q | 2 | 120 | 54 | 0.45 | 0.99 | <1.7 | 0.90 | 1.67 | 10 |
| | | 277 | 54 | 0.21 | 0.97 | <1.7 | 0.90 | 1.67 | 12 |
| | 1 | 120 | 32 | 0.27 | 0.99 | <1.7 | 1.00 | 3.13 | 10 |
| | | 277 | 32 | 0.13 | 0.95 | <1.7 | 1.00 | 3.13 | 15 |
| CFS28W/GR10q | 2 | 120 | 61 | 0.53 | 0.99 | <1.7 | 0.98 | 1.61 | 10 |
| | | 277 | 61 | 0.23 | 0.97 | <1.7 | 0.98 | 1.61 | 12 |
| | 1 | 120 | 34 | 0.29 | 0.99 | <1.7 | 1.00 | 2.94 | 10 |
| | | 277 | 34 | 0.14 | 0.93 | <1.7 | 1.00 | 2.94 | 15 |
| CFM36W/2G10 | 2 | 120 | 62 | 0.52 | 0.99 | <1.7 | 0.78 | 1.26 | 10 |
| | | 277 | 61 | 0.23 | 0.97 | <1.7 | 0.78 | 1.28 | 12 |
| | 1 | 120 | 33 | 0.28 | 0.99 | <1.7 | 0.81 | 2.45 | 10 |
| | | 277 | 33 | 0.13 | 0.94 | <1.7 | 0.81 | 2.45 | 15 |
| FT40W/2G11 | 2 | 120 | 82 | 0.69 | 0.99 | <1.7 | 0.95 | 1.16 | 10 |
| | | 277 | 82 | 0.30 | 0.98 | <1.7 | 0.95 | 1.16 | 10 |
| | 1 | 120 | 45 | 0.37 | 0.99 | <1.7 | 1.00 | 2.22 | 10 |
| | | 277 | 45 | 0.17 | 0.96 | <1.7 | 1.00 | 2.22 | 12 |
| FT39W/2G11 | 2 | 120 | 82 | 0.69 | 0.99 | <1.7 | 0.95 | 1.16 | 10 |
| | | 277 | 82 | 0.30 | 0.98 | <1.7 | 0.95 | 1.16 | 10 |
| | 1 | 120 | 45 | 0.37 | 0.99 | <1.7 | 1.00 | 2.22 | 10 |
| | | 277 | 45 | 0.17 | 0.96 | <1.7 | 1.00 | 2.22 | 12 |
| FT36W/2G11 | 2 | 120 | 66 | 0.55 | 0.99 | <1.7 | 0.80 | 1.21 | 10 |
| | | 277 | 65 | 0.24 | 0.98 | <1.7 | 0.80 | 1.23 | 10 |
| | 1 | 120 | 37 | 0.31 | 0.99 | <1.7 | 0.88 | 2.38 | 10 |
| | | 277 | 37 | 0.14 | 0.95 | <1.7 | 0.88 | 2.38 | 12 |
| FT24W/2G11 | 2 | 120 | 54 | 0.45 | 0.99 | <1.7 | 1.00 | 1.85 | 10 |
| | | 277 | 54 | 0.20 | 0.97 | <1.7 | 1.00 | 1.85 | 12 |
| | 1 | 120 | 27 | 0.22 | 0.99 | <1.7 | 1.00 | 3.70 | 10 |
| | | 277 | 28 | 0.11 | 0.92 | <1.7 | 1.00 | 3.57 | 15 |
| FT55W/2G11 | 1 | 120 | 44 | 0.37 | 0.99 | <1.7 | 0.70 | 1.59 | 10 |
| | | 277 | 44 | 0.17 | 0.96 | <1.7 | 0.70 | 1.59 | 12 |

# hatch

**Part No.**
# HC242PS/UV/DJ
**For 2x42 WATT COMPACT FLUORESCENT**

## ELECTRONIC COMPACT FLUORESCENT BALLAST

| | |
|---|---|
| **Input Voltage** | 120~277Vac ± 10% |
| **Ballast Factor** | Normal |
| **Starting Method** | Programmed Start |
| **Lamp Connection** | Series |

### CERTIFICATIONS

c UL us

RoHS COMPLIANT

Energy APPROVED

## ELECTRICAL SPECIFICATIONS BY LAMP TYPE

| Lamp Type | No. of Lamps | Volts | Input Watts | Input Current (Amps) | Power Factor | Crest Factor | Ballast Factor | Ballast Efficacy Factor | Max THD% |
|---|---|---|---|---|---|---|---|---|---|
| CFS55W/GRY10q-3 | 1 | 120 | 34 | 0.29 | 0.99 | <1.7 | 0.60 | 1.76 | 10 |
| | | 277 | 33 | 0.13 | 0.94 | <1.7 | 0.60 | 1.82 | 15 |
| FC9T5 22W | 2 | 120 | 52 | 0.44 | 0.99 | <1.7 | 1.10 | 2.12 | 10 |
| | | 277 | 52 | 0.19 | 0.97 | <1.7 | 1.10 | 2.12 | 12 |
| | 1 | 120 | 25 | 0.21 | 0.99 | <1.7 | 1.05 | 4.20 | 10 |
| | | 277 | 26 | 0.10 | 0.92 | <1.7 | 1.05 | 4.04 | 15 |
| FC12T5 40W | 2 | 120 | 77 | 0.64 | 0.99 | <1.7 | 0.86 | 1.12 | 10 |
| | | 277 | 77 | 0.28 | 0.98 | <1.7 | 0.86 | 1.12 | 10 |
| | 1 | 120 | 39 | 0.33 | 0.99 | <1.7 | 0.86 | 2.21 | 10 |
| | | 277 | 40 | 0.15 | 0.95 | <1.7 | 0.86 | 2.15 | 15 |
| CFTR57W/GX24q | 1 | 120 | 58 | 0.49 | 0.99 | <1.7 | 1.00 | 1.72 | 10 |
| | | 277 | 58 | 0.22 | 0.97 | <1.7 | 1.00 | 1.72 | 12 |
| CFTR70W/GX24q | 1 | 277 | 73 | 0.61 | 0.99 | <1.7 | 1.00 | 1.37 | 10 |
| | | 120 | 73 | 0.27 | 0.97 | <1.7 | 1.00 | 1.37 | 12 |
| FC9T5+FC12T5 | 1+1 | 120 | 67 | 0.55 | 0.99 | <1.7 | 0.90 | 1.34 | 10 |
| | | 277 | 67 | 0.25 | 0.98 | <1.7 | 0.90 | 1.34 | 10 |

### PERFORMANCE:

-Sound Rated: A
-Minimum Starting Temperature: 0°F, -18°C
-Maximum Case Temperature: 194°F, 90°C
-Meets FCC Part 18 (Class A) Non-consumer limits
-5 Year Warranty
-Input Frequency 50Hz/60hz
-Ballast frequency for all listed lamps: >40kHz

### APPROVALS:

-HL Type - Hazardous Location
-Transient Protection Meets ANSI/IEEE C62.41 Cat A
-UL, cUL 935 listed
-RoHS compliance

### PHYSICAL DIMENSIONS:

-Total Length (L): 5.00”
-Case Length (L2): 4.34
-Width (W): 3.00”
-Height (H): 1.38”
-Mounting (M1): 2.00”
-Mounting (M2): 4.63”

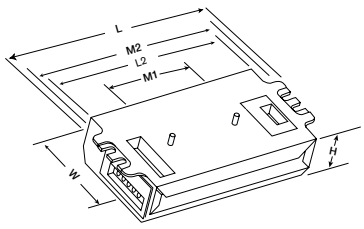


### WIRING DIAGRAM:

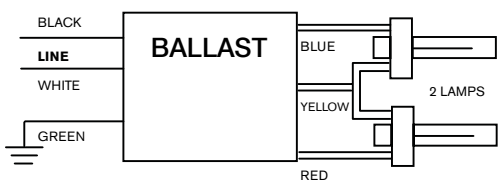


Two Lamp Applications

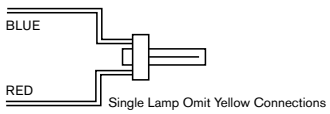


Single Lamp Applications

### $T_C$ POINT LOCATION:

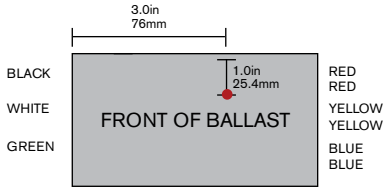

# HATCH

**PART NO.**
**HL224HO/PS/UV/S**
**For 2x24 WATT T5 LAMPS**

## ELECTRONIC LINEAR FLUORESCENT BALLAST

| | |
|---|---|
| **Input Voltage** | 120~277Vac ± 10% |
| **Ballast Factor** | High |
| **Starting Method** | Programmed Start |
| **Lamp Connection** | Series |

### CERTIFICATIONS

c UL us

RoHS COMPLIANT

energy APPROVED

## ELECTRICAL SPECIFICATIONS BY LAMP TYPE

| Lamp Type | No. of Lamps | Volts | Input Watts | Input Current (Amps) | Power Factor | 1.7Crest Factor | Ballast Factor | Ballast Efficacy Factor | Max THD% |
|---|---|---|---|---|---|---|---|---|---|
| F24T5/HO (Available with Gemini Lamp and Ballast Systems) | 2 | 120 | 52 | 0.44 | 0.98 | 1.7 | 1.00 | 1.92 | 10 |
| | | 277 | 52 | 0.19 | 0.98 | 1.7 | 1.00 | 1.92 | 10 |
| | 1 | 120 | 27 | 0.23 | 0.98 | 1.7 | 1.02 | 3.78 | 10 |
| | | 277 | 27 | 0.10 | 0.98 | 1.7 | 1.02 | 3.78 | 10 |
| F39T5/HO | 1 | 120 | 39 | 0.33 | 0.99 | 1.7 | 0.90 | 2.30 | 10 |
| | | 277 | 38 | 0.14 | 0.98 | 1.7 | 0.90 | 2.36 | 10 |
| FT24W/2G11 | 2 | 120 | 52 | 0.44 | 0.98 | 1.7 | 1.00 | 1.92 | 10 |
| | | 277 | 52 | 0.19 | 0.98 | 1.7 | 1.00 | 1.92 | 10 |
| | 1 | 120 | 27 | 0.23 | 0.98 | 1.7 | 1.02 | 3.78 | 10 |
| | | 277 | 27 | 0.10 | 0.98 | 1.7 | 1.02 | 3.78 | 10 |
| FC9T5 22W | 2 | 120 | 52 | 0.44 | 0.98 | 1.7 | 1.00 | 1.92 | 10 |
| | | 277 | 52 | 0.19 | 0.98 | 1.7 | 1.00 | 1.92 | 10 |
| | 1 | 120 | 27 | 0.23 | 0.98 | 1.7 | 1.02 | 3.78 | 10 |
| | | 277 | 27 | 0.10 | 0.98 | 1.7 | 1.02 | 3.78 | 10 |
| FC12T5 40W | 1 | 120 | 40 | 0.34 | 0.98 | 1.7 | 0.84 | 2.10 | 10 |
| | | 277 | 40 | 0.15 | 0.98 | 1.7 | 0.84 | 2.10 | 10 |
| FT40W/2G11 | 1 | 120 | 47 | 0.40 | 0.98 | 1.7 | 1.00 | 2.13 | 10 |
| | | 277 | 47 | 0.17 | 0.98 | 1.7 | 1.00 | 2.13 | 10 |
| FT36W/2G11 | 1 | 120 | 34 | 0.29 | 0.98 | 1.7 | 0.90 | 2.65 | 10 |
| | | 277 | 34 | 0.13 | 0.98 | 1.7 | 0.90 | 2.65 | 10 |

## PERFORMANCE:

-Sound Rated: A
-Minimum Starting Temperature: -0°F, -18°C
-Maximum Case Temperature: 194°F, 90°C
-Meets FCC Part 18 (Class A) Non-consumer limits
-3 Year Warranty
-Input Frequency 50Hz/60hz

## APPROVALS:

-HL Type - Hazardous Location
-Transient Protection Meets ANSI/IEEE C62.41 Cat A
-Lamp end-of-life protected
-UL, cUL 935 listed
-RoHS compliance

## PHYSICAL DIMENSIONS:

-Length (L): 16.7”
-Width (W): 1.18”
-Height (H): 1.00”
-Mounting (M): 16.4”

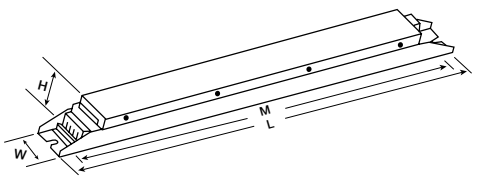


## WIRING DIAGRAM:

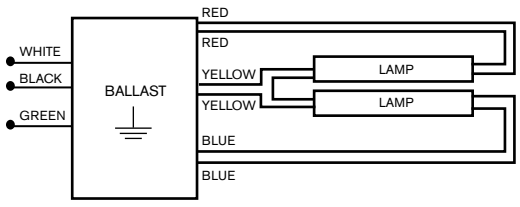


OMIT YELLOW CONNECTION FOR ONE LAMP OPERATION

## $T_C$ POINT LOCATION:

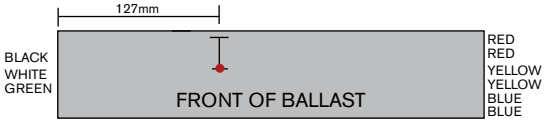


## COMPATIBLE WITH:

HATCH GEMINI
Lamp and Ballast. Perfectly Matched.

# HATCH

**PART NO.**
**HL224HO/PS/UV/W**
**For 2x24 WATT T5 LAMPS**

## ELECTRONIC LINEAR FLUORESCENT BALLAST

| | |
|---|---|
| **Input Voltage** | 120~277Vac ± 10% |
| **Ballast Factor** | Normal |
| **Starting Method** | Programmed Start |
| **Lamp Connection** | Series |

### CERTIFICATIONS

c UL us

RoHS COMPLIANT

energy APPROVED

## ELECTRICAL SPECIFICATIONS BY LAMP TYPE

| Lamp Type | No. of Lamps | Volts | Input Watts | Input Current (Amps) | Power Factor | Crest Factor | Ballast Factor | Ballast Efficacy Factor | Max THD% |
|---|---|---|---|---|---|---|---|---|---|
| F24T5/HO<br>Available with Gemini Lamp and Ballast Systems | 2 | 120 | 52 | 0.44 | 0.99 | 1.7 | 0.94 | 1.81 | 10 |
| | | 277 | 52 | 0.19 | 0.98 | 1.7 | 0.95 | 1.83 | 10 |
| | 1 | 120 | 27 | 0.23 | 0.99 | 1.7 | 0.97 | 3.59 | 10 |
| | | 277 | 27 | 0.11 | 0.98 | 1.7 | 0.97 | 3.59 | 10 |
| FT24W/2G11 | 2 | 120 | 51 | 0.42 | 0.99 | 1.7 | 0.91 | 1.78 | 10 |
| | | 277 | 50 | 0.19 | 0.98 | 1.7 | 0.92 | 1.84 | 10 |
| | 1 | 120 | 27 | 0.22 | 0.99 | 1.7 | 0.92 | 3.41 | 10 |
| | | 277 | 27 | 0.11 | 0.96 | 1.7 | 0.94 | 3.48 | 12 |
| FC9T5 22W | 2 | 120 | 54 | 0.45 | 0.99 | 1.7 | 1.10 | 2.04 | 10 |
| | | 277 | 54 | 0.20 | 0.98 | 1.7 | 1.11 | 2.06 | 10 |
| | 1 | 120 | 27 | 0.23 | 0.99 | 1.7 | 1.11 | 4.11 | 10 |
| | | 277 | 27 | 0.10 | 0.96 | 1.7 | 1.13 | 4.19 | 12 |
| F39T5/HO | 1 | 120 | 34 | 0.28 | 0.99 | 1.7 | 0.91 | 2.67 | 10 |
| | | 277 | 34 | 0.13 | 0.97 | 1.7 | 0.91 | 2.67 | 12 |
| FC12T5 40W | 1 | 120 | 39 | 0.32 | 0.99 | 1.7 | 0.85 | 2.18 | 10 |
| | | 277 | 39 | 0.15 | 0.98 | 1.7 | 0.87 | 2.23 | 10 |
| FT40W/2G11 | 1 | 120 | 45 | 0.38 | 0.99 | 1.7 | 1.01 | 2.24 | 10 |
| | | 277 | 45 | 0.16 | 0.98 | 1.7 | 1.02 | 2.27 | 10 |
| FT36W/2G11 | 1 | 120 | 31 | 0.26 | 0.99 | 1.7 | 0.77 | 2.48 | 10 |
| | | 277 | 31 | 0.12 | 0.97 | 1.7 | 0.78 | 2.52 | 12 |

### PERFORMANCE:

-Sound Rated: A
-Minimum Starting Temperature: -0°F, -18°C
-Maximum Case Temperature: 194°F, 90°C
-Meets FCC Part 18 (Class A) Non-consumer limits
-3 Year Warranty
-Input Frequency 50Hz/60hz

### APPROVALS:

-Transient Protection Meets ANSI/IEEE C62.41 Cat A
-Lamp end-of-life protected
-UL, cUL 935 listed

### PHYSICAL DIMENSIONS:

-Length (L): 9.45”
-Width (W): 1.35”
-Height (H): 1.06”
-Mounting (M): 8.96”

Lead Length:
-White, Black: 24”
-Blue: 28”
-Yellow: 44”
-Red: 28”

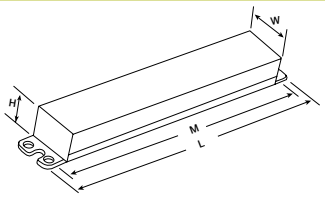


### WIRING DIAGRAM:

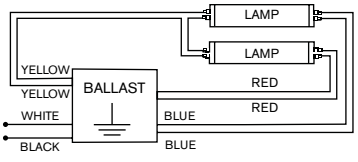


OMIT YELLOW CONNECTION FOR ONE LAMP OPERATION

### $T_C$ POINT LOCATION:

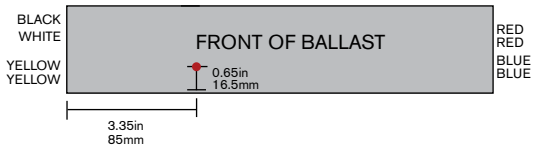


### COMPATIBLE WITH:

HATCH GEMINI
Lamp and Ballast. Perfectly Matched.

# HATCH

**PART NO.**
**HL228HE/PS/UV/S**
**For 2x28 WATT T5 LAMPS**

## ELECTRONIC LINEAR FLUORESCENT BALLAST

| | |
|---|---|
| **Input Voltage** | 120~277Vac ± 10% |
| **Ballast Factor** | High |
| **Starting Method** | Programmed Start |
| **Lamp Connection** | Series |

### CERTIFICATIONS

c UL us

RoHS COMPLIANT

energy APPROVED

## ELECTRICAL SPECIFICATIONS BY LAMP TYPE

| Lamp Type | No. of Lamps | Volts | Input Watts | Input Current (Amps) | Power Factor | 1.7Crest Factor | Ballast Factor | Ballast Efficacy Factor | Max THD% |
|---|---|---|---|---|---|---|---|---|---|
| F28T5/HE<br>Available with Gemini Lamp and Ballast Systems | 2 | 120 | 67 | 0.56 | 0.99 | 1.7 | 1.05 | 1.57 | 10 |
| | | 277 | 67 | 0.24 | 0.98 | 1.7 | 1.05 | 1.57 | 10 |
| | 1 | 120 | 33 | 0.28 | 0.95 | 1.7 | 1.04 | 3.15 | 12 |
| | | 277 | 33 | 0.13 | 0.95 | 1.7 | 1.04 | 3.15 | 12 |
| F21T5/HE<br>Available with Gemini Lamp and Ballast Systems | 2 | 120 | 51 | 0.42 | 0.99 | 1.7 | 1.04 | 2.04 | 10 |
| | | 277 | 51 | 0.19 | 0.98 | 1.7 | 1.04 | 2.04 | 10 |
| | 1 | 120 | 26 | 0.22 | 0.99 | 1.7 | 1.06 | 4.08 | 12 |
| | | 277 | 26 | 0.10 | 0.95 | 1.7 | 1.06 | 4.08 | 12 |
| F14T5/HE<br>Available with Gemini Lamp and Ballast Systems | 2 | 120 | 34 | 0.28 | 0.99 | 1.7 | 1.04 | 3.06 | 12 |
| | | 277 | 34 | 0.13 | 0.96 | 1.7 | 1.04 | 3.06 | 12 |
| | 1 | 120 | 19 | 0.16 | 0.98 | 1.7 | 1.12 | 5.89 | 15 |
| | | 277 | 19 | 0.08 | 0.92 | 1.7 | 1.12 | 5.89 | 15 |

## PERFORMANCE:

-Sound Rated: A
-Minimum Starting Temperature: -0°F, -18°C
-Maximum Case Temperature: 194°F, 90°C
-Meets FCC Part 18 (Class B) Consumer limits
-5 Year Warranty
-Input Frequency 50Hz/60hz

## APPROVALS:

-Transient Protection Meets ANSI/IEEE C62.41 Cat A
-Lamp end-of-life protected
-UL, cUL 935 listed

## PHYSICAL DIMENSIONS:

-Length (L): 16.7"
-Width (W): 1.18"
-Height (H): 1.00"
-Mounting (M): 16.4"

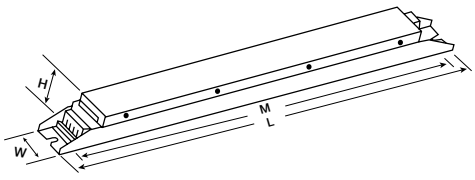


## WIRING DIAGRAM:

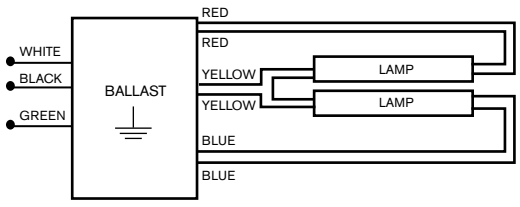


OMIT YELLOW CONNECTION FOR ONE LAMP OPERATION

## $T_C$ POINT LOCATION:

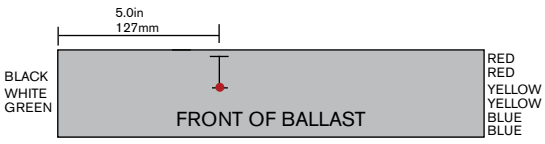


## COMPATIBLE WITH:

HATCH GEMINI
Lamp and Ballast. Perfectly Matched.

# HATCH

**PART NO.**
**HL228HE/PS/UV/W**
**For 2x28 WATT T5 LAMPS**

## ELECTRONIC LINEAR FLUORESCENT BALLAST

| | |
|---|---|
| **Input Voltage** | 120~277Vac ± 10% |
| **Ballast Factor** | High |
| **Starting Method** | Programmed Start |
| **Lamp Connection** | Series |

### CERTIFICATIONS

c UL us

RoHS COMPLIANT

energy APPROVED

## ELECTRICAL SPECIFICATIONS BY LAMP TYPE

| Lamp Type | No. of Lamps | Volts | Input Watts | Input Current (Amps) | Power Factor | Crest Factor | Ballast Factor | Ballast Efficacy Factor | Max THD% |
|---|---|---|---|---|---|---|---|---|---|
| F28T5/HE Available with Gemini Lamp and Ballast Systems | 2 | 120 | 67 | 0.56 | 0.99 | 1.7 | 1.05 | 1.57 | 10 |
| | | 277 | 67 | 0.24 | 0.98 | 1.7 | 1.05 | 1.57 | 10 |
| | 1 | 120 | 34 | 0.28 | 0.99 | 1.7 | 1.07 | 3.15 | 10 |
| | | 277 | 34 | 0.13 | 0.96 | 1.7 | 1.07 | 3.15 | 12 |
| F21T5/HE Available with Gemini Lamp and Ballast Systems | 2 | 120 | 46 | 0.38 | 0.99 | 1.7 | 0.94 | 2.04 | 10 |
| | | 277 | 46 | 0.17 | 0.97 | 1.7 | 0.94 | 2.04 | 12 |
| | 1 | 120 | 24 | 0.20 | 0.99 | 1.7 | 0.97 | 4.04 | 10 |
| | | 277 | 25 | 0.10 | 0.93 | 1.7 | 1.02 | 4.08 | 15 |
| F14T5/HE Available with Gemini Lamp and Ballast Systems | 2 | 120 | 30 | 0.25 | 0.99 | 1.7 | 0.92 | 3.06 | 10 |
| | | 277 | 31 | 0.12 | 0.96 | 1.7 | 0.94 | 3.03 | 12 |
| | 1 | 120 | 17 | 0.14 | 0.99 | 1.7 | 1.00 | 5.88 | 10 |
| | | 277 | 17 | 0.07 | 0.91 | 1.7 | 1.00 | 5.88 | 15 |

## PERFORMANCE:

-Sound Rated: A
-Minimum Starting Temperature: -0°F, -18°C
-Maximum Case Temperature: 194°F, 90°C
-Meets FCC Part 18 (Class A) Non-consumer limits
-5 Year Warranty
-Input Frequency 50Hz/60hz

## APPROVALS:

-Transient Protection Meets ANSI/IEEE C62.41 Cat A
-Lamp end-of-life protection
-UL, cUL 935 listed

## PHYSICAL DIMENSIONS:

-Length (L): 9.45”
-Width (W): 1.35”
-Height (H): 1.06”
-Mounting (M): 8.96”

Lead Length:
-White, Black: 24”
-Blue: 28”
-Yellow: 44”
-Red: 28”

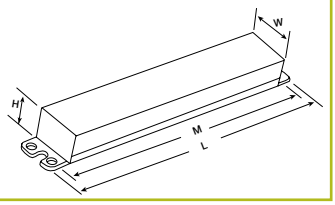


## WIRING DIAGRAM:

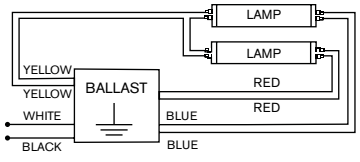


OMIT YELLOW CONNECTION FOR ONE LAMP OPERATION

## $T_C$ POINT LOCATION:

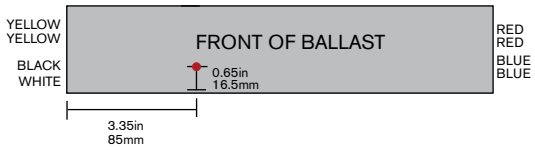


## COMPATIBLE WITH:

HATCH GEMINI
Lamp and Ballast. Perfectly Matched.

# HATCH

**PART NO.**
**HL232AIS/34/W**
**For 2x32 WATT T8 LAMPS**

## ELECTRONIC LINEAR FLUORESCENT BALLAST

| | |
|---|---|
| **Input Voltage** | 347Vac ± 10% |
| **Ballast Factor** | Low |
| **Starting Method** | Instant Start |
| **Lamp Connection** | Parallel |

### CERTIFICATIONS

c UL us · RoHS COMPLIANT · NEMA Premium · energy APPROVED

## ELECTRICAL SPECIFICATIONS BY LAMP TYPE

| Lamp Type | No. of Lamps | Volts | Input Watts | Input Current (Amps) | Power Factor | Crest Factor | Ballast Factor | Ballast Efficacy Factor | Max THD% |
|---|---|---|---|---|---|---|---|---|---|
| F32T8 32W | 2 | 347 | 50 | 0.15 | 0.99 | <1.7 | 0.76 | 1.52 | 10 |
| | 1 | 347 | 30 | 0.09 | 0.98 | <1.7 | 0.90 | 3.00 | 10 |
| F32T8 30W | 2 | 347 | 47 | 0.14 | 0.99 | <1.7 | 0.74 | 1.59 | 10 |
| | 1 | 347 | 29 | 0.09 | 0.98 | <1.7 | 0.91 | 3.15 | 10 |
| F32T8 28W (Available with Gemini Lamp and Ballast Systems) | 2 | 347 | 46 | 0.13 | 0.99 | <1.7 | 0.78 | 1.70 | 10 |
| | 1 | 347 | 29 | 0.09 | 0.98 | <1.7 | 0.98 | 3.38 | 10 |
| F32T8 25W (Available with Gemini Lamp and Ballast Systems) | 2 | 347 | 43 | 0.13 | 0.99 | <1.7 | 0.82 | 1.91 | 10 |
| | 1 | 347 | 27 | 0.08 | 0.97 | <1.7 | 1.01 | 3.75 | 12 |
| F25T8 | 2 | 347 | 40 | 0.12 | 0.99 | <1.7 | 0.76 | 1.91 | 10 |
| | 1 | 347 | 25 | 0.08 | 0.97 | <1.7 | 0.93 | 3.75 | 12 |
| F17T8 | 2 | 347 | 29 | 0.09 | 0.98 | <1.7 | 0.80 | 2.78 | 10 |
| | 1 | 347 | 19 | 0.06 | 0.91 | <1.7 | 0.98 | 5.17 | 15 |
| F40T8 | 1 | 347 | 36 | 0.11 | 0.99 | <1.7 | 0.86 | 2.39 | 10 |

### PERFORMANCE:

-Sound Rated: A
-Minimum Starting Temperature: 0°F, -18°C
-Maximum Case Temperature: 167°F, 75°C
-Meets FCC Part 18 (Class A) Non-consumer limits
-3 Year Warranty
-Input Frequency 50Hz/60hz
-Ballast frequency for all listed lamps: 37kHz-48kHz

### APPROVALS:

-Transient Protection Meets ANSI/IEEE C62.41 Cat A
-UL, cUL 935 listed

### PHYSICAL DIMENSIONS:

-Length (L): 9.50"
-Width (W): 1.70"
-Height (H): 1.15"
-Mounting (M): 8.90"

Lead Length:
-White, Black: 25"
-Blue: 31"
-Red: 37"

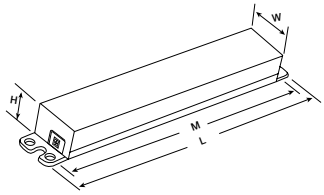


### WIRING DIAGRAM:

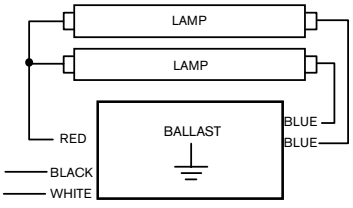


Two Lamp Application
(Cap off 1 Blue Lead for 1 Lamp Application)

### $T_C$ POINT LOCATION:

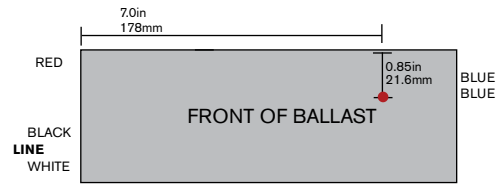


### COMPATIBLE WITH:

HATCH GEMINI
Lamp and Ballast. Perfectly Matched.

# HATCH

**PART NO.**
**HL232AIS/UV/HE/W**
**For 2x32 WATT T8 LAMPS**

## ELECTRONIC LINEAR FLUORESCENT BALLAST

| | |
|---|---|
| **Input Voltage** | 120~277Vac ± 10% |
| **Ballast Factor** | Low |
| **Starting Method** | Instant Start |
| **Lamp Connection** | Parallel |

**CERTIFICATIONS**

c UL us · RoHS COMPLIANT · NEMA Premium · energy APPROVED · CEE

## ELECTRICAL SPECIFICATIONS BY LAMP TYPE

| Lamp Type | No. of Lamps | Volts | Input Watts | Input Current (Amps) | Power Factor | Crest Factor | Ballast Factor | Ballast Efficacy Factor | Max THD% |
|---|---|---|---|---|---|---|---|---|---|
| F32T8 32W | 2 | 120 | 50 | 0.42 | 0.99 | <1.7 | 0.80 | 1.60 | 10 |
| | | 277 | 50 | 0.18 | 0.99 | <1.7 | 0.80 | 1.60 | 10 |
| | 1 | 120 | 31 | 0.26 | 0.99 | <1.7 | 0.98 | 3.16 | 10 |
| | | 277 | 31 | 0.11 | 0.98 | <1.7 | 0.98 | 3.16 | 10 |
| F32T8 30W | 2 | 120 | 46 | 0.39 | 0.99 | <1.7 | 0.77 | 1.67 | 10 |
| | | 277 | 46 | 0.17 | 0.99 | <1.7 | 0.77 | 1.67 | 10 |
| | 1 | 120 | 28 | 0.24 | 0.99 | <1.7 | 0.92 | 3.28 | 10 |
| | | 277 | 28 | 0.10 | 0.97 | <1.7 | 0.92 | 3.28 | 12 |
| F32T8 28W (Available with Gemini Lamp and Ballast Systems) | 2 | 120 | 44 | 0.37 | 0.99 | <1.7 | 0.79 | 1.79 | 10 |
| | | 277 | 44 | 0.16 | 0.99 | <1.7 | 0.79 | 1.79 | 10 |
| | 1 | 120 | 28 | 0.24 | 0.99 | <1.7 | 1.02 | 3.64 | 10 |
| | | 277 | 28 | 0.10 | 0.97 | <1.7 | 0.99 | 3.53 | 12 |
| F32T8 25W (Available with Gemini Lamp and Ballast Systems) | 2 | 120 | 40 | 0.34 | 0.99 | <1.7 | 0.81 | 2.02 | 10 |
| | | 277 | 40 | 0.15 | 0.98 | <1.7 | 0.81 | 2.02 | 10 |
| | 1 | 120 | 26 | 0.22 | 0.99 | <1.7 | 1.03 | 3.96 | 10 |
| | | 277 | 26 | 0.10 | 0.97 | <1.7 | 1.03 | 3.96 | 12 |
| F25T8 25W | 2 | 120 | 39 | 0.33 | 0.99 | <1.7 | 0.85 | 2.17 | 10 |
| | | 277 | 39 | 0.14 | 0.98 | <1.7 | 0.85 | 2.17 | 10 |
| | 1 | 120 | 25 | 0.21 | 0.99 | <1.7 | 1.05 | 4.20 | 10 |
| | | 277 | 25 | 0.09 | 0.97 | <1.7 | 1.00 | 4.00 | 12 |
| F17T8 17W | 2 | 120 | 29 | 0.42 | 0.99 | <1.7 | 0.93 | 3.20 | 10 |
| | | 277 | 29 | 0.19 | 0.97 | <1.7 | 0.89 | 3.06 | 12 |
| | 1 | 120 | 19 | 0.16 | 0.99 | <1.7 | 1.17 | 6.15 | 10 |
| | | 277 | 19 | 0.07 | 0.95 | <1.7 | 1.11 | 5.84 | 12 |
| F40T8 40W | 1 | 120 | 38 | 0.32 | 0.99 | <1.7 | 0.98 | 2.57 | 10 |
| | | 277 | 38 | 0.14 | 0.98 | <1.7 | 0.95 | 2.50 | 10 |

## PERFORMANCE:

-Sound Rated: A
-Minimum Starting Temperature: 0°F, -18°C
-Maximum Case Temperature: 167°F, 75°C
-Meets FCC Part 18 (Class A) Non-consumer limits
-5 Year Warranty
-Input Frequency 50Hz/60hz
-Ballast frequency for all listed lamps: >40kHz

## APPROVALS:

-HL Type - Hazardous Location,
-Transient Protection Meets ANSI/IEEE C62.41 Cat A
-UL, cUL 935 listed, Class P, Type 1 Outdoor

## PHYSICAL DIMENSIONS:

-Length (L): 9.50”
-Width (W): 1.16”
-Height (H): 1.05”
-Mounting (M): 9.0”

Lead Length:
-White, Black: 25”
-Blue: 31”
-Red: 48”

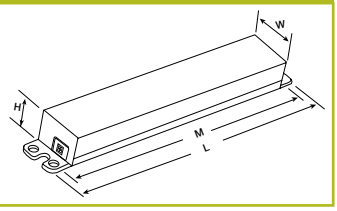


## WIRING DIAGRAM:

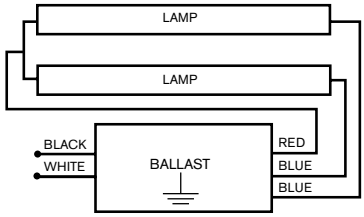


Two Lamp Application
(Cap off 1 Blue Lead for 1 Lamp Application)

## $T_C$ POINT LOCATION:

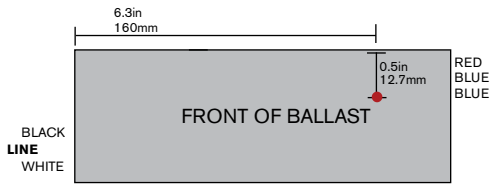


## COMPATIBLE WITH:

HATCH GEMINI
Lamp and Ballast. Perfectly Matched.

# hatch

**Part No.**
**HL232APS/UV/HE/W**
**For 2x32 WATT T8 LAMPS**

## ELECTRONIC LINEAR FLUORESCENT BALLAST

| | |
|---|---|
| **Input Voltage** | 120~277Vac ± 10% |
| **Ballast Factor** | Low |
| **Starting Method** | Programmed Start |
| **Lamp Connection** | Parallel |

### CERTIFICATIONS

c UL us · RoHS COMPLIANT · NEMA Premium · Energy Star APPROVED

## ELECTRICAL SPECIFICATIONS BY LAMP TYPE

| Lamp Type | No. of Lamps | Volts | Input Watts | Input Current (Amps) | Power Factor | Crest Factor | Ballast Factor | Ballast Efficacy Factor | Max THD% |
|---|---|---|---|---|---|---|---|---|---|
| F32T8 32W | 2 | 120 | 52 | 0.44 | 0.99 | <1.7 | 0.77 | 1.48 | 10 |
| | | 277 | 52 | 0.19 | 0.98 | <1.7 | 0.77 | 1.48 | 10 |
| | 1 | 120 | 33 | 0.28 | 0.99 | <1.7 | 0.86 | 2.61 | 10 |
| | | 277 | 33 | 0.12 | 0.98 | <1.7 | 0.86 | 2.61 | 10 |
| F32T8 30W | 2 | 120 | 48 | 0.41 | 0.99 | <1.7 | 0.75 | 1.56 | 10 |
| | | 277 | 48 | 0.18 | 0.98 | <1.7 | 0.75 | 1.56 | 10 |
| | 1 | 120 | 31 | 0.26 | 0.99 | <1.7 | 0.84 | 2.71 | 10 |
| | | 277 | 31 | 0.12 | 0.97 | <1.7 | 0.84 | 2.67 | 12 |
| F32T8 28W | 2 | 120 | 46 | 0.39 | 0.99 | <1.7 | 0.75 | 1.63 | 10 |
| | | 277 | 47 | 0.17 | 0.98 | <1.7 | 0.75 | 1.60 | 10 |
| | 1 | 120 | 30 | 0.25 | 0.99 | <1.7 | 0.86 | 2.87 | 10 |
| | | 277 | 30 | 0.11 | 0.97 | <1.7 | 0.86 | 2.87 | 12 |
| F32T8 25W | 2 | 120 | 44 | 0.37 | 0.99 | <1.7 | 0.79 | 1.80 | 10 |
| | | 277 | 44 | 0.16 | 0.98 | <1.7 | 0.79 | 1.80 | 10 |
| | 1 | 120 | 28 | 0.24 | 0.99 | <1.7 | 0.92 | 3.29 | 10 |
| | | 277 | 29 | 0.11 | 0.97 | <1.7 | 0.92 | 3.17 | 12 |
| F25T8 25W | 2 | 120 | 41 | 0.35 | 0.99 | <1.7 | 0.74 | 1.80 | 10 |
| | | 277 | 41 | 0.15 | 0.98 | <1.7 | 0.74 | 1.80 | 10 |
| | 1 | 120 | 27 | 0.23 | 0.99 | <1.7 | 0.88 | 3.26 | 10 |
| | | 277 | 28 | 0.10 | 0.97 | <1.7 | 0.88 | 3.14 | 12 |
| F17T8 17W | 2 | 120 | 30 | 0.25 | 0.99 | <1.7 | 0.77 | 2.57 | 10 |
| | | 277 | 31 | 0.12 | 0.97 | <1.7 | 0.77 | 2.48 | 12 |
| | 1 | 120 | 21 | 0.17 | 0.99 | <1.7 | 0.84 | 4.00 | 10 |
| | | 277 | 21 | 0.08 | 0.95 | <1.7 | 0.84 | 4.00 | 15 |
| F40T8 40W | 1 | 120 | 38 | 0.32 | 0.99 | <1.7 | 0.82 | 2.16 | 10 |
| | | 277 | 39 | 0.14 | 0.98 | <1.7 | 0.82 | 2.10 | 10 |

## PERFORMANCE:

-Sound Rated: A
-Minimum Starting Temperature: 0°F, -18°C
-Maximum Case Temperature: 167°F, 75°C
-Meets FCC Part 18 (Class A) Non-consumer limits
-5 Year Warranty
-Input Frequency 50Hz/60hz
-Ballast frequency for all listed lamps: >40kHz

## APPROVALS:

-Transient Protection Meets ANSI/IEEE C62.41 Cat A
-UL, cUL 935 listed, Class P, Type 1 Outdoor

## PHYSICAL DIMENSIONS:

-Length (L): 9.50"
-Width (W): 1.38"
-Height (H): 1.18"
-Mounting (M): 8.9"

Lead Length:
-White, Black: 25"
-Blue: 26"
-Red: 26"
-Yellow: 36"

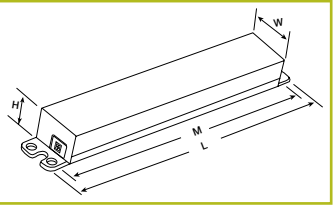


## WIRING DIAGRAM:

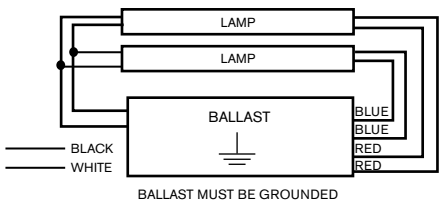


BALLAST MUST BE GROUNDED

## $T_C$ POINT LOCATION:

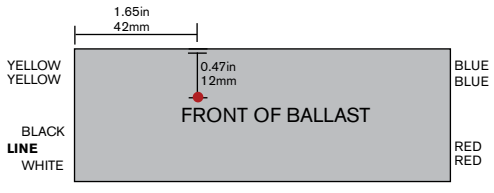

# HATCH

**PART NO.**
**HL232BIS/UV/HE/W**
**For 2x32 WATT T8 LAMPS**

## ELECTRONIC LINEAR FLUORESCENT BALLAST

| | |
|---|---|
| **Input Voltage** | 120~277Vac ± 10% |
| **Ballast Factor** | Normal |
| **Starting Method** | Instant Start |
| **Lamp Connection** | Parallel |

**CERTIFICATIONS**

c UL us · RoHS COMPLIANT · NEMA Premium · Energy APPROVED · CEE

## ELECTRICAL SPECIFICATIONS BY LAMP TYPE

| Lamp Type | No. of Lamps | Volts | Input Watts | Input Current (Amps) | Power Factor | Crest Factor | Ballast Factor | Ballast Efficacy Factor | Max THD% |
|---|---|---|---|---|---|---|---|---|---|
| F32T8 32W | 2 | 120 | 57 | 0.48 | 0.99 | <1.7 | 0.90 | 1.58 | <10 |
| | | 277 | 58 | 0.21 | 0.99 | <1.7 | 0.91 | 1.58 | <10 |
| | 1 | 120 | 35 | 0.31 | 0.99 | <1.7 | 1.09 | 3.11 | <10 |
| | | 277 | 35 | 0.14 | 0.98 | <1.7 | 1.09 | 3.11 | <10 |
| F32T8 30W | 2 | 120 | 52 | 0.44 | 0.99 | <1.7 | 0.87 | 1.67 | <10 |
| | | 277 | 52 | 0.19 | 0.99 | <1.7 | 0.87 | 1.67 | <10 |
| | 1 | 120 | 32 | 0.27 | 0.99 | <1.7 | 1.05 | 3.28 | <10 |
| | | 277 | 32 | 0.12 | 0.98 | <1.7 | 1.05 | 3.28 | <12 |
| F32T8 28W (Available with Gemini Lamp and Ballast Systems) | 2 | 120 | 49 | 0.41 | 0.99 | <1.7 | 0.87 | 1.78 | <10 |
| | | 277 | 49 | 0.18 | 0.99 | <1.7 | 0.87 | 1.78 | <10 |
| | 1 | 120 | 31 | 0.25 | 0.99 | <1.7 | 1.17 | 3.79 | <10 |
| | | 277 | 31 | 0.11 | 0.98 | <1.7 | 1.17 | 3.79 | <10 |
| F32T8 25W (Available with Gemini Lamp and Ballast Systems) | 2 | 120 | 44 | 0.37 | 0.99 | <1.7 | 0.87 | 1.98 | <10 |
| | | 277 | 44 | 0.16 | 0.99 | <1.7 | 0.87 | 1.98 | <10 |
| | 1 | 120 | 29 | 0.23 | 0.99 | <1.7 | 1.15 | 3.96 | <10 |
| | | 277 | 29 | 0.10 | 0.98 | <1.7 | 1.15 | 3.96 | <10 |
| F25T8 25W | 2 | 120 | 44 | 0.37 | 0.99 | <1.7 | 0.88 | 2.00 | <10 |
| | | 277 | 44 | 0.16 | 0.99 | <1.7 | 0.88 | 2.00 | <10 |
| | 1 | 120 | 28 | 0.23 | 0.99 | <1.7 | 1.14 | 4.07 | <10 |
| | | 277 | 28 | 0.10 | 0.97 | <1.7 | 1.14 | 4.07 | <12 |
| F17T8 17W | 2 | 120 | 32 | 0.26 | 0.99 | <1.7 | 0.96 | 3.00 | <10 |
| | | 277 | 32 | 0.11 | 0.98 | <1.7 | 0.96 | 3.00 | <12 |
| | 1 | 120 | 21 | 0.17 | 0.99 | <1.7 | 1.31 | 6.25 | <10 |
| | | 277 | 22 | 0.08 | 0.95 | <1.7 | 1.31 | 5.95 | <15 |
| F40T8 40W | 1 | 120 | 42 | 0.34 | 0.99 | <1.7 | 1.05 | 2.50 | <10 |
| | | 277 | 42 | 0.15 | 0.99 | <1.7 | 1.02 | 2.44 | <10 |

## PERFORMANCE:

-Sound Rated: A
-Minimum Starting Temperature: 0°F, -18°C
-Maximum Case Temperature: 167°F, 75°C
-Meets FCC Part 18 (Class A) Non-consumer limits
-5 Year Warranty
-Input Frequency 50Hz/60hz
-Ballast frequency for all listed lamps: >40kHz

## APPROVALS:

-Transient Protection Meets ANSI/IEEE C62.41 Cat A
-UL, cUL 935 listed, Class P, Type 1 Outdoor

## PHYSICAL DIMENSIONS:

-Length (L): 9.50"
-Width (W): 1.16"
-Height (H): 1.05"
-Mounting (M): 9.0"

Lead Length:
-White, Black: 25"
-Blue: 31
-Red: 48"

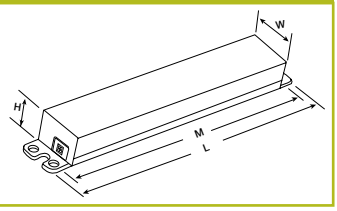


## WIRING DIAGRAM:

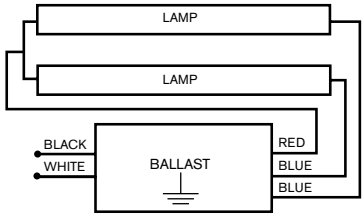


Two Lamp Application
(Cap off 1 Blue Lead for 1 Lamp Application)

## $T_C$ POINT LOCATION:

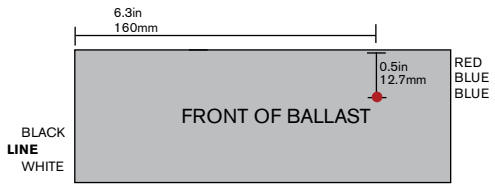


## COMPATIBLE WITH:

HATCH GEMINI
Lamp and Ballast. Perfectly Matched.

# HATCH

**PART NO.**
**HL232BPS/UV/HE/W**
**For 2x32 WATT T8 LAMPS**

## ELECTRONIC LINEAR FLUORESCENT BALLAST

| | |
|---|---|
| **Input Voltage** | 120~277Vac ± 10% |
| **Ballast Factor** | Normal |
| **Starting Method** | Programmed Start |
| **Lamp Connection** | Parallel |

### CERTIFICATIONS

c UL us

RoHS COMPLIANT

## ELECTRICAL SPECIFICATIONS BY LAMP TYPE

| Lamp Type | No. of Lamps | Volts | Input Watts | Input Current (Amps) | Power Factor | Crest Factor | Ballast Factor | Ballast Efficacy Factor | Max THD% |
|---|---|---|---|---|---|---|---|---|---|
| F32T8 32W | 2 | 120 | 60 | 0.50 | 0.99 | <1.7 | 0.88 | 1.47 | 10 |
| | | 277 | 60 | 0.22 | 0.98 | <1.7 | 0.88 | 1.47 | 10 |
| | 1 | 120 | 37 | 0.31 | 0.99 | <1.7 | 0.99 | 2.68 | 10 |
| | | 277 | 37 | 0.14 | 0.93 | <1.7 | 0.99 | 2.68 | 10 |
| F32T8 30W | 2 | 120 | 56 | 0.47 | 0.99 | <1.7 | 0.88 | 1.57 | 10 |
| | | 277 | 56 | 0.21 | 0.98 | <1.7 | 0.88 | 1.57 | 10 |
| | 1 | 120 | 36 | 0.30 | 0.98 | <1.7 | 1.02 | 2.83 | 10 |
| | | 277 | 36 | 0.14 | 0.96 | <1.7 | 1.02 | 2.83 | 10 |
| F32T8 28W<br>Available with Gemini Lamp and Ballast Systems | 2 | 120 | 54 | 0.45 | 0.99 | <1.7 | 0.90 | 1.67 | 10 |
| | | 277 | 54 | 0.20 | 0.98 | <1.7 | 0.90 | 1.67 | 10 |
| | 1 | 120 | 35 | 0.29 | 0.99 | <1.7 | 1.06 | 3.03 | 10 |
| | | 277 | 35 | 0.13 | 0.96 | <1.7 | 1.06 | 3.03 | 10 |
| F32T8 25W<br>Available with Gemini Lamp and Ballast Systems | 2 | 120 | 50 | 0.42 | 0.99 | <1.7 | 0.92 | 1.84 | 10 |
| | | 277 | 50 | 0.19 | 0.97 | <1.7 | 0.92 | 1.84 | 10 |
| | 1 | 120 | 33 | 0.27 | 0.99 | <1.7 | 1.05 | 3.18 | 10 |
| | | 277 | 33 | 0.12 | 0.95 | <1.7 | 1.05 | 3.18 | 12 |
| F25T8 25W | 2 | 120 | 47 | 0.40 | 0.99 | <1.7 | 0.83 | 1.77 | 10 |
| | | 277 | 47 | 0.18 | 0.95 | <1.7 | 0.88 | 1.87 | 10 |
| | 1 | 120 | 31 | 0.26 | 0.98 | <1.7 | 1.01 | 3.26 | 10 |
| | | 277 | 32 | 0.12 | 0.95 | <1.7 | 1.01 | 3.16 | 12 |
| F17T8 17W | 2 | 120 | 34 | 0.30 | 0.98 | <1.7 | 0.90 | 2.65 | 10 |
| | | 277 | 35 | 0.13 | 0.96 | <1.7 | 0.90 | 2.57 | 10 |
| | 1 | 120 | 23 | 0.20 | 0.98 | <1.7 | 1.03 | 4.48 | 10 |
| | | 277 | 24 | 0.09 | 0.93 | <1.7 | 1.03 | 4.29 | 12 |
| F40T8 40W | 1 | 120 | 45 | 0.38 | 0.98 | <1.7 | 0.99 | 2.20 | 10 |
| | | 277 | 45 | 0.17 | 0.97 | <1.7 | 1.01 | 2.24 | 10 |

## PERFORMANCE:

-Sound Rated: A
-Minimum Starting Temperature: 0°F, -18°C
-Maximum Case Temperature: 167°F, 75°C
-Meets FCC Part 18 (Class A) Non-consumer limits
-5 Year Warranty
-Input Frequency 50Hz/60hz
-Ballast frequency for all listed lamps: >40kHz

## APPROVALS:

-HL Type - Hazardous Location
-Transient Protection Meets ANSI/IEEE C62.41 Cat A
-UL, cUL 935 listed, Class P, Type 1 Outdoor
-RoHS compliance

## PHYSICAL DIMENSIONS:

-Length (L): 9.50"
-Width (W): 1.38"
-Height (H): 1.18"
-Mounting (M): 8.9"

Lead Length:
-White, Black: 25"
-Blue: 26"
-Red: 26"
-Yellow: 36"

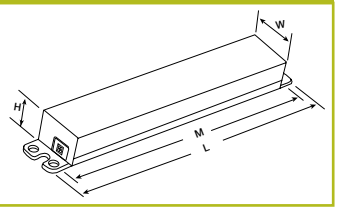


## WIRING DIAGRAM:

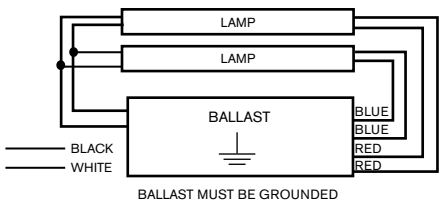


BALLAST MUST BE GROUNDED

## $T_C$ POINT LOCATION:

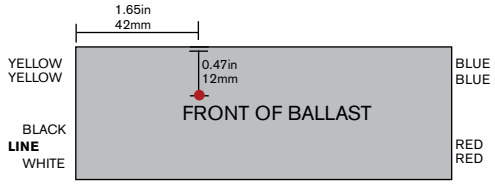


## COMPATIBLE WITH:

HATCH GEMINI
Lamp and Ballast. Perfectly Matched.

# HATCH

**PART NO.**
**HL232CIS /UV/HE/W**
**For 2x32 WATT T8 LAMPS**

## ELECTRONIC LINEAR FLUORESCENT BALLAST

| | |
|---|---|
| **Input Voltage** | 120~277Vac ± 10% |
| **Ballast Factor** | High |
| **Starting Method** | Instant Start |
| **Lamp Connection** | Parallel |

**CERTIFICATIONS**

c UL us · RoHS COMPLIANT · NEMA Premium · energy APPROVED · CEE

## ELECTRICAL SPECIFICATIONS BY LAMP TYPE

| Lamp Type | No. of Lamps | Volts | Input Watts | Input Current (Amps) | Power Factor | Crest Factor | Ballast Factor | Ballast Efficacy Factor | Max THD% |
|---|---|---|---|---|---|---|---|---|---|
| F32T8 32W | 2 | 120 | 77 | 0.65 | 0.99 | <1.7 | 1.19 | 1.55 | 10 |
| | | 277 | 77 | 0.28 | 0.98 | <1.7 | 1.19 | 1.55 | 10 |
| | 1 | 120 | 48 | 0.40 | 0.99 | <1.7 | 1.45 | 3.03 | 10 |
| | | 277 | 48 | 0.18 | 0.96 | <1.7 | 1.45 | 3.03 | 12 |
| F32T8 30W | 2 | 120 | 70 | 0.59 | 0.99 | <1.7 | 1.18 | 1.69 | 10 |
| | | 277 | 68 | 0.25 | 0.98 | <1.7 | 1.18 | 1.74 | 10 |
| | 1 | 120 | 43 | 0.36 | 0.99 | <1.7 | 1.40 | 3.26 | 10 |
| | | 277 | 43 | 0.16 | 0.95 | <1.7 | 1.40 | 3.26 | 15 |
| F32T8 28W (Available with Gemini Lamp and Ballast Systems) | 2 | 120 | 66 | 0.57 | 0.97 | <1.7 | 1.21 | 1.84 | 10 |
| | | 277 | 66 | 0.25 | 0.97 | <1.7 | 1.25 | 1.90 | 12 |
| | 1 | 120 | 41 | 0.35 | 0.99 | <1.7 | 1.47 | 3.59 | 10 |
| | | 277 | 41 | 0.16 | 0.95 | <1.7 | 1.47 | 3.59 | 15 |
| F32T8 25W (Available with Gemini Lamp and Ballast Systems) | 2 | 120 | 59 | 0.50 | 0.99 | <1.7 | 1.18 | 2.00 | 10 |
| | | 277 | 58 | 0.22 | 0.97 | <1.7 | 1.18 | 2.03 | 12 |
| | 1 | 120 | 38 | 0.32 | 0.99 | <1.7 | 1.40 | 3.68 | 10 |
| | | 277 | 37 | 0.14 | 0.95 | <1.7 | 1.40 | 3.78 | 15 |
| F25T8 25W | 2 | 120 | 60 | 0.51 | 0.99 | <1.7 | 1.16 | 1.93 | 10 |
| | | 277 | 60 | 0.22 | 0.97 | <1.7 | 1.18 | 1.97 | 12 |
| | 1 | 120 | 39 | 0.33 | 0.99 | <1.7 | 1.47 | 3.78 | 10 |
| | | 277 | 39 | 0.15 | 0.94 | <1.7 | 1.44 | 3.68 | 15 |
| F17T8 17W | 2 | 120 | 42 | 0.35 | 0.99 | <1.7 | 1.21 | 2.88 | 10 |
| | | 277 | 42 | 0.16 | 0.95 | <1.7 | 1.24 | 2.95 | 15 |
| | 1 | 120 | 28 | 0.24 | 0.99 | <1.7 | 1.40 | 5.00 | 10 |
| | | 277 | 28 | 0.11 | 0.92 | <1.7 | 1.40 | 5.00 | 15 |
| F40T8 40W | 1 | 120 | 57 | 0.48 | 0.99 | <1.7 | 1.32 | 2.32 | 10 |
| | | 277 | 58 | 0.22 | 0.97 | <1.7 | 1.35 | 2.32 | 12 |

## PERFORMANCE:

-Sound Rated: A
-Minimum Starting Temperature: 0°F, -18°C
-Maximum Case Temperature: 167°F, 75°C
-Meets FCC Part 18 (Class A) Non-consumer limits
-5 Year Warranty
-Input Frequency 50Hz/60hz
-Ballast frequency for all listed lamps: >40kHz

## APPROVALS:

-Transient Protection Meets ANSI/IEEE C62.41 Cat A
-UL, cUL 935 listed, Class P, Type 1 Outdoor

## PHYSICAL DIMENSIONS:

-Length (L): 9.50"
-Width (W): 1.38"
-Height (H): 1.18"
-Mounting (M): 8.9"

Lead Length:
-White, Black: 25"
-Blue: 31"
-Red: 48"

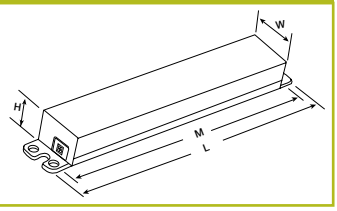


## WIRING DIAGRAM:

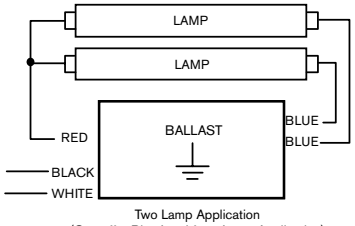


Two Lamp Application
(Cap off 1 Blue Lead for 1 Lamp Application)

## $T_C$ POINT LOCATION:

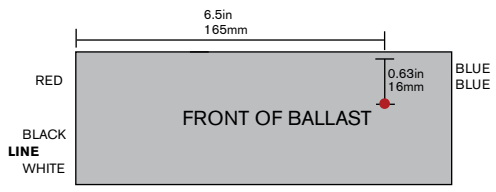


## COMPATIBLE WITH:

HATCH GEMINI
Lamp and Ballast. Perfectly Matched.

# hatch

**Part No.**
**HL232CPS/UV/HE/W**
**For 2x32 WATT T8 LAMPS**

## ELECTRONIC LINEAR FLUORESCENT BALLAST

| | |
|---|---|
| **Input Voltage** | 120~277Vac ± 10% |
| **Ballast Factor** | High |
| **Starting Method** | Programmed Start |
| **Lamp Connection** | Parallel |

### CERTIFICATIONS

c UL us

RoHS COMPLIANT

## ELECTRICAL SPECIFICATIONS BY LAMP TYPE

| Lamp Type | No. of Lamps | Volts | Input Watts | Input Current (Amps) | Power Factor | Crest Factor | Ballast Factor | Ballast Efficacy Factor | Max THD% |
|---|---|---|---|---|---|---|---|---|---|
| F32T8 32W | 2 | 120 | 78 | 0.65 | 0.99 | 1.7 | 1.18 | 1.51 | 10 |
| | | 277 | 78 | 0.29 | 0.98 | 1.7 | 1.18 | 1.51 | 10 |
| | 1 | 120 | 50 | 0.42 | 0.99 | 1.7 | 1.42 | 2.84 | 10 |
| | | 277 | 50 | 0.19 | 0.97 | 1.7 | 1.42 | 2.84 | 12 |
| F32T8 30W | 2 | 120 | 72 | 0.60 | 0.99 | 1.7 | 1.18 | 1.64 | 10 |
| | | 277 | 72 | 0.26 | 0.98 | 1.7 | 1.18 | 1.64 | 10 |
| | 1 | 120 | 45 | 0.38 | 0.99 | 1.7 | 1.37 | 3.04 | 10 |
| | | 277 | 45 | 0.17 | 0.96 | 1.7 | 1.37 | 3.04 | 12 |
| F32T8 28W | 2 | 120 | 68 | 0.57 | 0.99 | 1.7 | 1.18 | 1.74 | 10 |
| | | 277 | 68 | 0.25 | 0.98 | 1.7 | 1.18 | 1.74 | 10 |
| | 1 | 120 | 43 | 0.36 | 0.99 | 1.7 | 1.39 | 3.23 | 10 |
| | | 277 | 43 | 0.16 | 0.96 | 1.7 | 1.39 | 3.23 | 12 |
| F32T8 25W | 2 | 120 | 64 | 0.54 | 0.99 | 1.7 | 1.24 | 1.94 | 10 |
| | | 277 | 64 | 0.24 | 0.98 | 1.7 | 1.24 | 1.94 | 10 |
| | 1 | 120 | 41 | 0.34 | 0.99 | 1.7 | 1.46 | 3.56 | 10 |
| | | 277 | 41 | 0.16 | 0.95 | 1.7 | 1.46 | 3.56 | 12 |
| F25T8 25W | 2 | 120 | 60 | 0.50 | 0.99 | 1.7 | 1.15 | 1.92 | 10 |
| | | 277 | 60 | 0.22 | 0.97 | 1.7 | 1.15 | 1.92 | 12 |
| | 1 | 120 | 38 | 0.32 | 0.99 | 1.7 | 1.33 | 3.50 | 10 |
| | | 277 | 38 | 0.14 | 0.95 | 1.7 | 1.33 | 3.50 | 15 |
| F17T8 17W | 2 | 120 | 44 | 0.37 | 0.99 | 1.7 | 1.18 | 2.68 | 10 |
| | | 277 | 44 | 0.16 | 0.96 | 1.7 | 1.18 | 2.68 | 12 |
| | 1 | 120 | 30 | 0.25 | 0.99 | 1.7 | 1.44 | 4.80 | 10 |
| | | 277 | 30 | 0.12 | 0.93 | 1.7 | 1.44 | 4.80 | 15 |
| F40T8 40W | 1 | 120 | 58 | 0.49 | 0.99 | 1.7 | 1.35 | 2.33 | 10 |
| | | 277 | 58 | 0.22 | 0.97 | 1.7 | 1.35 | 2.33 | 12 |

### PERFORMANCE:

-Sound Rated: A
-Minimum Starting Temperature: 0°F, -18°C
-Maximum Case Temperature: 167°F, 75°C
-Meets FCC Part 18 (Class A) Non-consumer limits
-5 Year Warranty
-Input Frequency 50Hz/60hz
-Ballast frequency for all listed lamps: >40kHz

### APPROVALS:

-Transient Protection Meets ANSI/IEEE C62.41 Cat A
-UL, cUL 935 listed, Class P, Type 1 Outdoor

### PHYSICAL DIMENSIONS:

-Length (L): 9.50"
-Width (W): 1.38"
-Height (H): 1.18"
-Mounting (M): 8.9"

Lead Length:
-White, Black: 25"
-Blue: 26"
-Red: 26"
-Yellow: 36"

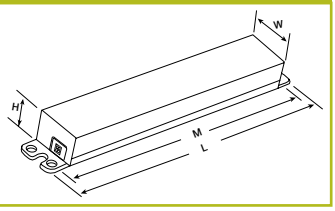


### WIRING DIAGRAM:

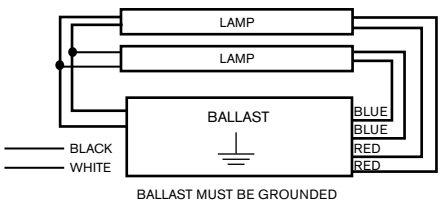


BALLAST MUST BE GROUNDED

### $T_C$ POINT LOCATION:

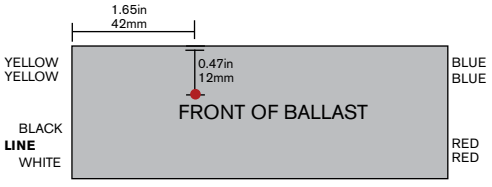

# hatch

**Part No.**
**HL232RIS/12/W**
**For 2x32 WATT T8 LAMPS**

## ELECTRONIC LINEAR FLUORESCENT BALLAST

| | |
|---|---|
| **Input Voltage** | 120Vac ± 10% |
| **Ballast Factor** | Normal |
| **Starting Method** | Instant Start |
| **Lamp Connection** | Parallel |

### CERTIFICATIONS

c UL us

RoHS COMPLIANT

energy APPROVED

## ELECTRICAL SPECIFICATIONS BY LAMP TYPE

| Lamp Type | No. of Lamps | Input Watts | Input Current (Amps) | Power Factor | Crest Factor | Ballast Factor | Ballast Efficacy Factor | Max THD% |
|---|---|---|---|---|---|---|---|---|
| F32T8 | 2 | 57 | 0.80 | 0.60 | 1.7 | 0.88 | 1.54 | 150 |
| | 1 | 37 | 0.55 | 0.57 | 1.7 | 1.00 | 2.70 | 150 |
| F25T8 | 2 | 57 | 0.65 | 0.57 | 1.7 | 0.90 | 1.58 | 150 |
| | 1 | 31 | 0.47 | 0.57 | 1.7 | 1.05 | 3.39 | 150 |
| F17T8 | 2 | 34 | 0.50 | 0.54 | 1.7 | 0.93 | 2.74 | 150 |
| | 1 | 25 | 0.39 | 0.54 | 1.7 | 1.10 | 4.40 | 150 |
| F40T8 | 1 | 42 | 0.60 | 0.57 | 1.7 | 1.00 | 2.38 | 150 |

## PERFORMANCE:

-Sound Rated: A
-Minimum Starting Temperature: 0°F, -18°C
-Maximum Case Temperature: 167°F, 75°C
-Meets FCC Part 18 (Class B) Consumer limits
-OCV: 600V
-Input Frequency 50Hz/60hz

## APPROVALS:

-UL, cUL 935 listed

## PHYSICAL DIMENSIONS:

-Length (L): 9.50”
-Width (W): 1.16”
-Height (H): 0.88”
-Mounting (M): 8.90”

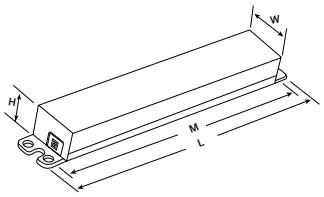


## WIRING DIAGRAM:

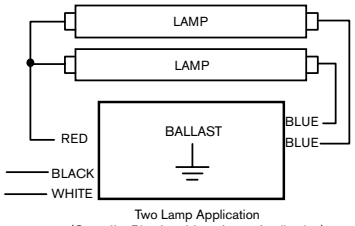


Two Lamp Application
(Cap off 1 Blue Lead for 1 Lamp Application)

## $T_C$ POINT LOCATION:

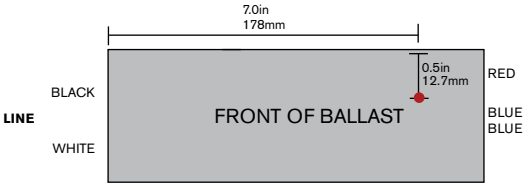

# hatch

**Part No.**
**HL239HO/PS/UV/S**
**For 2x39 WATT T5 LAMPS**

## ELECTRONIC LINEAR FLUORESCENT BALLAST

| | |
|---|---|
| **Input Voltage** | 120~277Vac ± 10% |
| **Ballast Factor** | High |
| **Starting Method** | Programmed Start |
| **Lamp Connection** | Series |

### CERTIFICATIONS

c UL us

RoHS COMPLIANT

energy APPROVED

## ELECTRICAL SPECIFICATIONS BY LAMP TYPE

| Lamp Type | No. of Lamps | Volts | Input Watts | Input Current (Amps) | Power Factor | Crest Factor | Ballast Factor | Ballast Efficacy Factor | Max THD% |
|---|---|---|---|---|---|---|---|---|---|
| F39T5/HO (Available with Gemini Lamp and Ballast Systems) | 2 | 120 | 87 | 0.73 | 0.98 | 1.7 | 1.00 | 1.15 | 10 |
| | | 277 | 85 | 0.31 | 0.98 | 1.7 | 1.00 | 1.18 | 10 |
| | 1 | 120 | 43 | 0.36 | 0.98 | 1.7 | 1.02 | 2.37 | 10 |
| | | 277 | 43 | 0.16 | 0.98 | 1.7 | 1.02 | 2.37 | 10 |
| F24T5/HO (Available with Gemini Lamp and Ballast Systems) | 2 | 120 | 55 | 0.47 | 0.98 | 1.7 | 1.10 | 2.00 | 10 |
| | | 277 | 55 | 0.21 | 0.98 | 1.7 | 1.10 | 2.00 | 10 |
| | 1 | 120 | 29 | 0.25 | 0.98 | 1.7 | 1.12 | 3.86 | 15 |
| | | 277 | 29 | 0.12 | 0.98 | 1.7 | 1.12 | 3.86 | 15 |
| FC12T5 40W | 2 | 120 | 80 | 0.68 | 0.98 | 1.7 | 0.90 | 1.13 | 10 |
| | | 277 | 80 | 0.29 | 0.98 | 1.7 | 0.90 | 1.13 | 10 |
| | 1 | 120 | 42 | 0.35 | 0.98 | 1.7 | 0.92 | 2.19 | 15 |
| | | 277 | 42 | 0.16 | 0.98 | 1.7 | 0.92 | 2.19 | 15 |
| FC9T5 22W | 2 | 120 | 54 | 0.46 | 0.98 | 1.7 | 1.10 | 2.04 | 10 |
| | | 277 | 54 | 0.20 | 0.98 | 1.7 | 1.10 | 2.04 | 10 |
| | 1 | 120 | 29 | 0.24 | 0.95 | 1.7 | 1.12 | 3.86 | 15 |
| | | 277 | 29 | 0.12 | 0.98 | 1.7 | 1.12 | 3.86 | 15 |
| FT36W/2G11 | 2 | 120 | 69 | 0.59 | 0.94 | 1.7 | 0.94 | 1.36 | 10 |
| | | 277 | 69 | 0.25 | 0.98 | 1.7 | 0.94 | 1.36 | 10 |
| | 1 | 120 | 36 | 0.30 | 0.95 | 1.7 | 0.96 | 2.67 | 15 |
| | | 277 | 36 | 0.20 | 0.95 | 1.7 | 0.96 | 2.67 | 15 |
| FT24W/2G11 | 2 | 120 | 54 | 0.46 | 0.98 | 1.7 | 1.10 | 2.04 | 10 |
| | | 277 | 54 | 0.20 | 0.98 | 1.7 | 1.10 | 2.04 | 10 |
| | 1 | 120 | 29 | 0.24 | 0.95 | 1.7 | 1.12 | 3.86 | 20 |
| | | 277 | 29 | 0.12 | 0.95 | 1.7 | 1.12 | 3.86 | 20 |
| FT40W/2G11 | 1 | 120 | 50 | 0.42 | 0.98 | 1.7 | 1.10 | 2.20 | 10 |
| | | 277 | 50 | 0.19 | 0.98 | 1.7 | 1.10 | 2.20 | 10 |
| (1)FC9T5+(1) FC12T5 | 2 | 120 | 68 | 0.58 | 0.98 | 1.7 | 1.00 | 1.47 | 10 |
| | | 277 | 68 | 0.25 | 0.98 | 1.7 | 1.00 | 1.47 | 10 |

## PERFORMANCE:

-Sound Rated: A
-Minimum Starting Temperature: 0°F, -18°C
-Maximum Case Temperature: 194°F, 90°C
-Meets FCC Part 18 (Class A) Non-consumer limits
-5 Year Warranty
-Input Frequency 50Hz/60hz

## APPROVALS:

-Transient Protection Meets ANSI/IEEE C62.41 Cat A
-Lamp end-of-life protected
-UL, cUL 935 listed

## PHYSICAL DIMENSIONS:

-Length (L): 16.7"
-Width (W): 1.18"
-Height (H): 1.00"
-Mounting (M): 16.4"

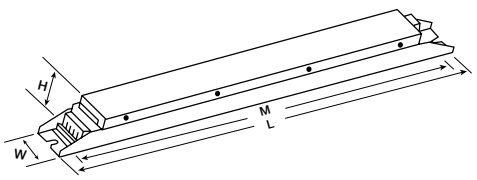


## WIRING DIAGRAM:

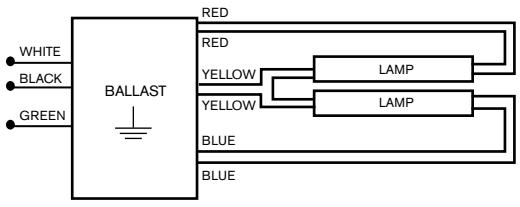


OMIT YELLOW CONNECTION FOR ONE LAMP OPERATION

## $T_C$ POINT LOCATION:

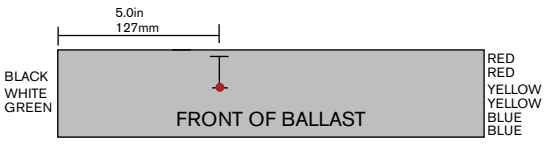


## COMPATIBLE WITH:

HATCH GEMINI
Lamp and Ballast. Perfectly Matched.

# HATCH

**PART NO.**
**HL239HO/PS/UV/W**
**For 2x39 WATT T5 LAMPS**

## ELECTRONIC LINEAR FLUORESCENT BALLAST

| | |
|---|---|
| **Input Voltage** | 120~277Vac ± 10% |
| **Ballast Factor** | Normal |
| **Starting Method** | Programmed Start |
| **Lamp Connection** | Series |

### CERTIFICATIONS

c UL us

RoHS COMPLIANT

energy APPROVED

## ELECTRICAL SPECIFICATIONS BY LAMP TYPE

| Lamp Type | No. of Lamps | Volts | Input Watts | Input Current (Amps) | Power Factor | Crest Factor | Ballast Factor | Ballast Efficacy Factor | Max THD% |
|---|---|---|---|---|---|---|---|---|---|
| F39T5/HO (Available with Gemini Lamp and Ballast Systems) | 2 | 120 | 90 | 0.78 | 0.99 | 1.7 | 1.00 | 1.11 | 10 |
| | | 277 | 89 | 0.34 | 0.99 | 1.7 | 1.00 | 1.12 | 10 |
| | 1 | 120 | 46 | 0.39 | 0.99 | 1.7 | 1.03 | 2.23 | 10 |
| | | 277 | 47 | 0.18 | 0.97 | 1.7 | 1.06 | 2.25 | 12 |
| F24T5/HO (Available with Gemini Lamp and Ballast Systems) | 2 | 120 | 59 | 0.50 | 0.99 | 1.7 | 1.08 | 1.83 | 10 |
| | | 277 | 59 | 0.22 | 0.98 | 1.7 | 1.08 | 1.83 | 10 |
| | 1 | 120 | 30 | 0.25 | 0.99 | 1.7 | 1.10 | 3.66 | 10 |
| | | 277 | 30 | 0.12 | 0.95 | 1.7 | 1.10 | 3.66 | 15 |
| FC12T5 40W | 2 | 120 | 93 | 0.78 | 0.99 | 1.7 | 1.02 | 1.09 | 10 |
| | | 277 | 92 | 0.34 | 0.98 | 1.7 | 1.01 | 1.09 | 10 |
| | 1 | 120 | 49 | 0.41 | 0.99 | 1.7 | 1.07 | 2.18 | 10 |
| | | 277 | 50 | 0.19 | 0.97 | 1.7 | 1.10 | 2.18 | 12 |
| FC9T5 22W | 2 | 120 | 63 | 0.53 | 0.99 | 1.7 | 1.25 | 1.98 | 10 |
| | | 277 | 63 | 0.23 | 0.98 | 1.7 | 1.25 | 1.98 | 10 |
| | 1 | 120 | 33 | 0.28 | 0.99 | 1.7 | 1.31 | 3.97 | 10 |
| | | 277 | 33 | 0.13 | 0.95 | 1.7 | 1.31 | 3.97 | 12 |
| FT36W/2G11 | 2 | 120 | 72 | 0.60 | 0.99 | 1.7 | 0.87 | 1.20 | 10 |
| | | 277 | 71 | 0.26 | 0.98 | 1.7 | 0.87 | 1.22 | 10 |
| | 1 | 120 | 38 | 0.32 | 0.99 | 1.7 | 0.92 | 2.42 | 10 |
| | | 277 | 38 | 0.14 | 0.99 | 1.7 | 0.92 | 2.42 | 10 |
| FT24W/2G11 | 2 | 120 | 54 | 0.45 | 0.99 | 1.7 | 0.99 | 1.83 | 10 |
| | | 277 | 55 | 0.20 | 0.98 | 1.7 | 0.99 | 1.80 | 10 |
| | 1 | 120 | 30 | 0.25 | 0.99 | 1.7 | 1.09 | 3.63 | 10 |
| | | 277 | 30 | 0.12 | 0.95 | 1.7 | 1.09 | 3.63 | 15 |
| FT40W/2G11 | 1 | 120 | 50 | 0.42 | 0.99 | 1.7 | 1.09 | 2.18 | 10 |
| | | 277 | 50 | 0.19 | 0.97 | 1.7 | 1.09 | 2.18 | 12 |
| (1)FC9T5+(1) FC12T5 | 2 | 120 | 68 | 0.57 | 0.99 | 1.7 | 0.96 | 1.41 | 10 |
| | | 277 | 68 | 0.25 | 0.98 | 1.7 | 0.96 | 1.41 | 10 |

### PERFORMANCE:

-Sound Rated: A
-Minimum Starting Temperature: -0°F, -18°C
-Maximum Case Temperature: 194°F, 90°C
-Meets FCC Part 18 (Class A) Non-consumer limits
-5 Year Warranty
-Input Frequency 50Hz/60hz
-Lamp Connection: Series

### APPROVALS:

-Transient Protection Meets ANSI/IEEE C62.41 Cat A
-Lamp end-of-life protection
-UL, cUL 935 listed

### PHYSICAL DIMENSIONS:

-Length (L): 9.45”
-Width (W): 1.35”
-Height (H): 1.06”
-Mounting (M): 8.96”

Lead Length:
-White, Black: 24”
-Blue: 28”
-Yellow: 44”
-Red: 28”

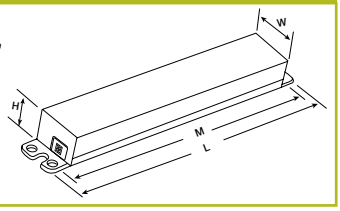


### WIRING DIAGRAM:

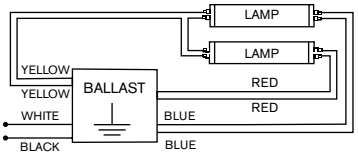


OMIT YELLOW CONNECTION FOR ONE LAMP OPERATION

### $T_C$ POINT LOCATION:

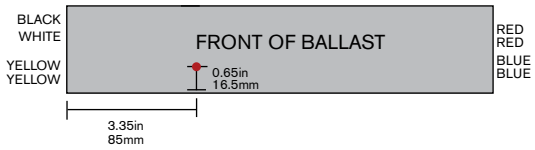


### COMPATIBLE WITH:

HATCH GEMINI
Lamp and Ballast. Perfectly Matched.

# hatch

**Part No.**
**HL240IS/UV/W**
**For 2x40 WATT T12 LAMPS**

## ELECTRONIC LINEAR FLUORESCENT BALLAST

| | |
|---|---|
| **Input Voltage** | 120~277Vac ± 10% |
| **Ballast Factor** | Normal |
| **Starting Method** | Instant Start |
| **Lamp Connection** | Parallel |

### CERTIFICATIONS

c UL us

RoHS COMPLIANT

## ELECTRICAL SPECIFICATIONS BY LAMP TYPE

| Lamp Type | No. of Lamps | Volts | Input Watts | Input Current (Amps) | Power Factor | Crest Factor | Ballast Factor | vMax THD% |
|---|---|---|---|---|---|---|---|---|
| F40T12 or F40T12/U | 2 | 120 | 67 | 0.56 | 0.99 | < 1.7 | 0.88 | 10 |
| | | 277 | 68 | 0.26 | 0.97 | < 1.7 | 0.88 | 12 |
| F34T12 or F34T12/U | 2 | 120 | 57 | 0.48 | 0.98 | < 1.7 | 0.85 | 10 |
| | | 277 | 57 | 0.21 | 0.97 | < 1.7 | 0.85 | 10 |
| F40T12 (25W Shoplight) | 2 | 120 | 71 | 0.60 | 0.99 | < 1.7 | 1.40 | 10 |
| | | 277 | 71 | 0.26 | 0.98 | < 1.7 | 1.40 | 10 |
| F30T12 | 2 | 120 | 52 | 0.44 | 0.99 | < 1.7 | 0.88 | 10 |
| | | 277 | 52 | 0.19 | 0.97 | < 1.7 | 0.88 | 12 |

### PERFORMANCE:

-Sound Rated: A
-Minimum Starting Temperature: 0°F, -18°C
-Maximum Case Temperature: 167°F, 75°C
-Meets FCC Part 18 (Class A) Non-consumer limits
-3 Year Warranty
-Input Frequency 50Hz/60hz
-OCV: 600V

### APPROVALS:

-Transient Protection Meets ANSI/IEEE C62.41 Cat A
-UL, cUL 935 listed

### PHYSICAL DIMENSIONS:

-Length (L): 9.50”
-Width (W): 1.38”
-Height (H): 1.18”
-Mounting (M): 8.90”

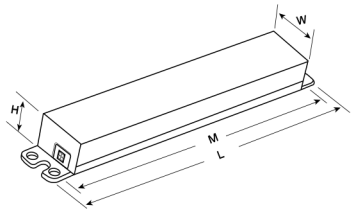


### WIRING DIAGRAM:

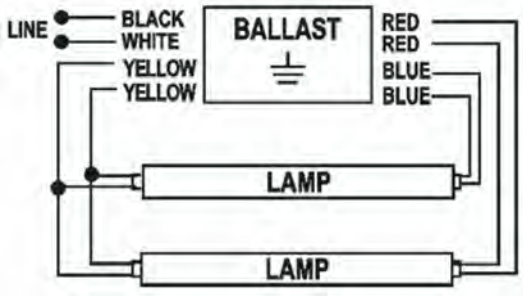


### $T_C$ POINT LOCATION:

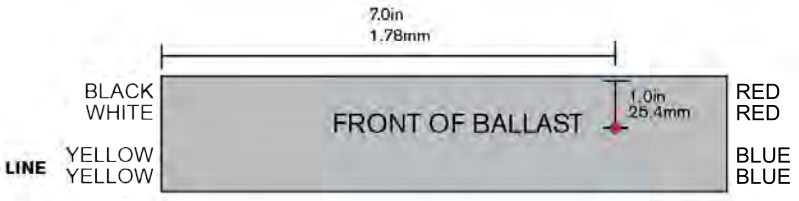

# HATCH

**PART NO.**
**HL254HO/PS/UV/S**
**For 2x54 WATT T5 LAMPS**

## ELECTRONIC LINEAR FLUORESCENT BALLAST

| | |
|---|---|
| **Input Voltage** | 120~277Vac ± 10% |
| **Ballast Factor** | High |
| **Starting Method** | Programmed Start |
| **Lamp Connection** | Series |

### CERTIFICATIONS

c UL us

RoHS COMPLIANT

energy APPROVED

## ELECTRICAL SPECIFICATIONS BY LAMP TYPE

| Lamp Type | No. of Lamps | Volts | Input Watts | Input Current (Amps) | Power Factor | Crest Factor | Ballast Factor | Ballast Efficacy Factor | Max THD% |
|---|---|---|---|---|---|---|---|---|---|
| F54T5/HO<br>Available with Gemini Lamp and Ballast Systems | 2 | 120 | 120 | 1.00 | 0.98 | 1.7 | 1.00 | 0.83 | 10 |
| | | 277 | 117 | 0.43 | 0.98 | 1.7 | 1.00 | 0.85 | 10 |
| | 1 | 120 | 62 | 0.52 | 0.96 | 1.7 | 1.02 | 1.65 | 15 |
| | | 277 | 62 | 0.23 | 0.96 | 1.7 | 1.02 | 1.65 | 15 |
| FC12T5/HO 55W | 2 | 120 | 106 | 0.89 | 0.98 | 1.7 | 0.85 | 0.80 | 10 |
| | | 277 | 103 | 0.38 | 0.98 | 1.7 | 0.85 | 0.83 | 10 |
| | 1 | 120 | 55 | 0.46 | 0.96 | 1.7 | 0.87 | 1.58 | 15 |
| | | 277 | 55 | 0.21 | 0.96 | 1.7 | 0.87 | 1.58 | 15 |
| FT55W/2G11 | 2 | 120 | 112 | 0.94 | 0.98 | 1.7 | 0.90 | 0.80 | 10 |
| | | 277 | 109 | 0.41 | 0.98 | 1.7 | 0.90 | 0.83 | 10 |
| | 1 | 120 | 58 | 0.49 | 0.96 | 1.7 | 0.92 | 1.59 | 15 |
| | | 277 | 58 | 0.22 | 0.96 | 1.7 | 0.92 | 1.59 | 15 |
| FT50W/2G11 | 2 | 120 | 118 | 0.99 | 0.98 | 1.7 | 1.10 | 0.93 | 10 |
| | | 277 | 115 | 0.43 | 0.98 | 1.7 | 1.10 | 0.96 | 10 |
| | 1 | 120 | 61 | 0.51 | 0.96 | 1.7 | 1.12 | 1.84 | 15 |
| | | 277 | 61 | 0.23 | 0.96 | 1.7 | 1.12 | 1.84 | 15 |
| FT36W/2G11 | 2 | 120 | 89 | 0.75 | 0.98 | 1.7 | 1.20 | 1.35 | 10 |
| | | 277 | 86 | 0.32 | 0.98 | 1.7 | 1.20 | 1.40 | 10 |
| | 1 | 120 | 46 | 0.39 | 0.96 | 1.7 | 1.22 | 2.65 | 20 |
| | | 277 | 46 | 0.18 | 0.96 | 1.7 | 1.22 | 2.65 | 20 |
| F54T5/HO/ES 49W | 2 | 120 | 107 | 0.90 | 0.99 | 1.7 | 1.00 | 0.93 | 10 |
| | | 277 | 106 | 0.39 | 0.98 | 1.7 | 1.00 | 0.94 | 10 |
| | 1 | 120 | 57 | 0.48 | 0.99 | 1.7 | 1.00 | 1.75 | 10 |
| | | 277 | 57 | 0.21 | 0.98 | 1.7 | 1.00 | 1.75 | 10 |

### PERFORMANCE:

-Sound Rated: A
-Minimum Starting Temperature: -20°F, -28°C
-Maximum Case Temperature: 194°F, 90°C
-Meets FCC Part 18 (Class A) Non-consumer limits
-5 Year Warranty
-Input Frequency 50Hz/60hz

### APPROVALS:

-Transient Protection Meets ANSI/IEEE C62.41 Cat A
-Lamp end-of-life protected
-UL, cUL 935 listed

### PHYSICAL DIMENSIONS:

-Length (L): 16.7"
-Width (W): 1.18"
-Height (H): 1.00"
-Mounting (M): 16.4"

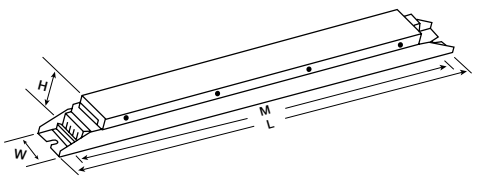


### WIRING DIAGRAM:

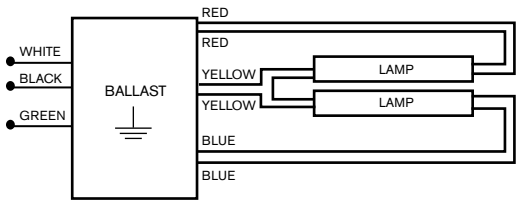


OMIT YELLOW CONNECTION FOR ONE LAMP OPERATION

### $T_C$ POINT LOCATION:

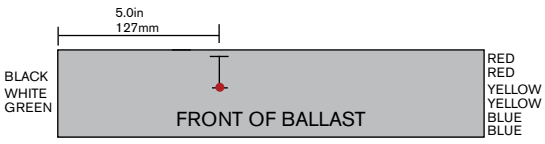


### COMPATIBLE WITH:

HATCH GEMINI
Lamp and Ballast. Perfectly Matched.

# hatch

**Part No.**
**HL254HO/PS/UV/W**
**For 2x54 WATT T5 LAMPS**

## ELECTRONIC LINEAR FLUORESCENT BALLAST

| | |
|---|---|
| **Input Voltage** | 120~277Vac ± 10% |
| **Ballast Factor** | Normal |
| **Starting Method** | Programmed Start |
| **Lamp Connection** | Series |

### CERTIFICATIONS

c UL us

RoHS COMPLIANT

energy APPROVED

## ELECTRICAL SPECIFICATIONS BY LAMP TYPE

| Lamp Type | No. of Lamps | Volts | Input Watts | Input Current (Amps) | Power Factor | Crest Factor | Ballast Factor | Ballast Efficacy Factor | Max THD% |
|---|---|---|---|---|---|---|---|---|---|
| F54T5/HO<br>Available with Gemini Lamp and Ballast Systems | 2 | 120 | 120 | 1.00 | 0.99 | 1.7 | 1.00 | 0.83 | 10 |
| | | 277 | 120 | 0.43 | 0.98 | 1.7 | 1.00 | 0.83 | 10 |
| | 1 | 120 | 61 | 0.51 | 0.99 | 1.7 | 1.01 | 1.65 | 10 |
| | | 277 | 61 | 0.23 | 0.97 | 1.7 | 1.01 | 1.65 | 12 |
| FC12T5/HO 55W | 2 | 120 | 104 | 0.87 | 0.99 | 1.7 | 0.85 | 0.82 | 10 |
| | | 277 | 104 | 0.39 | 0.98 | 1.7 | 0.85 | 0.82 | 10 |
| | 1 | 120 | 50 | 0.41 | 0.98 | 1.7 | 0.81 | 1.60 | 12 |
| | | 277 | 50 | 0.19 | 0.96 | 1.7 | 0.81 | 1.60 | 15 |
| FT55W/2G11 | 2 | 120 | 112 | 0.94 | 0.98 | 1.7 | 0.90 | 0.80 | 10 |
| | | 277 | 109 | 0.41 | 0.98 | 1.7 | 0.90 | 0.83 | 10 |
| | 1 | 120 | 58 | 0.49 | 0.96 | 1.7 | 0.92 | 1.59 | 15 |
| | | 277 | 58 | 0.22 | 0.96 | 1.7 | 0.92 | 1.59 | 15 |
| FT50W/2G11 | 2 | 120 | 106 | 0.89 | 0.99 | 1.7 | 0.95 | 0.90 | 10 |
| | | 277 | 106 | 0.39 | 0.98 | 1.7 | 0.95 | 0.90 | 12 |
| | 1 | 120 | 51 | 0.43 | 0.99 | 1.7 | 0.90 | 1.76 | 10 |
| | | 277 | 51 | 0.19 | 0.96 | 1.7 | 0.90 | 1.76 | 15 |
| FT36W/2G11 | 2 | 120 | 79 | 0.66 | 0.98 | 1.7 | 0.99 | 1.26 | 10 |
| | | 277 | 79 | 0.29 | 0.97 | 1.7 | 0.99 | 1.26 | 12 |
| | 1 | 120 | 41 | 0.34 | 0.98 | 1.7 | 0.97 | 2.37 | 10 |
| | | 277 | 41 | 0.16 | 0.95 | 1.7 | 0.97 | 2.37 | 15 |
| F54T5/HO/ES 49W | 2 | 120 | 107 | 0.90 | 0.99 | 1.7 | 1.00 | 0.93 | 10 |
| | | 277 | 106 | 0.39 | 0.98 | 1.7 | 1.00 | 0.94 | 10 |
| | 1 | 120 | 57 | 0.48 | 0.99 | 1.7 | 1.00 | 1.75 | 10 |
| | | 277 | 57 | 0.21 | 0.98 | 1.7 | 1.00 | 1.75 | 10 |

### PERFORMANCE:

-Sound Rated: A
-Minimum Starting Temperature: -20°F, -28°C
-Maximum Case Temperature: 194°F, 90°C
-Meets FCC Part 18 (Class A) Non-consumer limits
-5 Year Warranty
-Input Frequency 50Hz/60hz

### APPROVALS:

-Transient Protection Meets ANSI/IEEE C62.41 Cat A
-Lamp end-of-life protected
-UL, cUL 935 listed
-RoHs compliance

### PHYSICAL DIMENSIONS:

-Length (L): 9.45”
-Width (W): 1.35”
-Height (H): 1.06”
-Mounting (M): 8.96”

Lead Length:
-White, Black: 24”
-Blue: 28”
-Yellow: 44”
-Red: 28”

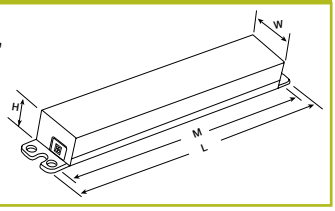


### WIRING DIAGRAM:

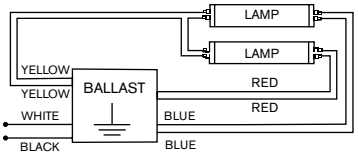


OMIT YELLOW CONNECTION FOR ONE LAMP OPERATION

### $T_C$ POINT LOCATION:

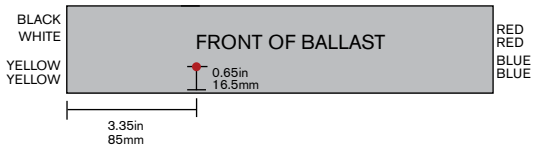


### COMPATIBLE WITH:

HATCH GEMINI
Lamp and Ballast. Perfectly Matched.

# hatch

**Part No.**
**HL259IS/12/W**
**For 2 F96 T8 LAMPS**

## ELECTRONIC LINEAR FLUORESCENT BALLAST

| | |
|---|---|
| **Input Voltage** | 120Vac ± 10% |
| **Ballast Factor** | Normal |
| **Starting Method** | Instant Start |
| **Lamp Connection** | Parallel |

### CERTIFICATIONS

c UL us

RoHS COMPLIANT

energy APPROVED

## ELECTRICAL SPECIFICATIONS BY LAMP TYPE

| Lamp Type | No. of Lamps | Volts | Input Watts | Input Current (Amps) | Power Factor | Crest Factor | Ballast Factor | Ballast Efficacy Factor | Max THD% |
|---|---|---|---|---|---|---|---|---|---|
| F96T8 59W | 2 | 277 | 111 | 0.93 | 0.99 | 1.58 | 0.88 | 0.79 | 10 |
| | 1 | 277 | 70 | 0.59 | 0.98 | 1.46 | 0.88 | 1.26 | 10 |

## PERFORMANCE:

-Sound Rated: A
-Minimum Starting Temperature: 0°F, -18°C
-Maximum Case Temperature: 140°F, 60°C
-Meets FCC Part 18 (Class B) Consumer Limits
-3 Year Warranty
-Input Frequency 60Hz
-Ballast frequency for all listed lamps: 20kHz-33kHz

## APPROVALS:

-Transient Protection Meets ANSI/IEEE C62.41 Cat A
-UL, cUL 935 listed
-Lamp End-of-Life Protected

## PHYSICAL DIMENSIONS:

-Length (L): 9.45”
-Width (W): 1.80”
-Height (H): 1.37”
-Mounting (M): 8.90”

Lead Length:
-White, Black: 22”
-Blue: 46”
-Red: 70”

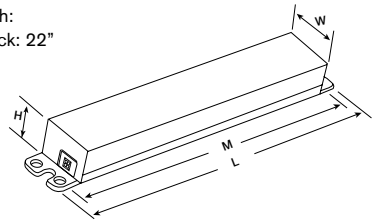


## WIRING DIAGRAM:

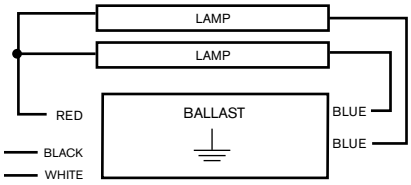


Two Lamp Application
(Cap off 1 Blue Lead for 1 Lamp Application)
Ballast Must Be Grounded

## $T_C$ POINT LOCATION:

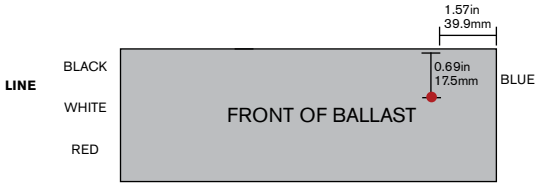

# hatch

**Part No.**
**HL259IS/UV/W**
**For 2 F96 T8 LAMPS**

## ELECTRONIC LINEAR FLUORESCENT BALLAST

| | |
|---|---|
| **Input Voltage** | 120-277Vac ± 10% |
| **Ballast Factor** | Normal |
| **Starting Method** | Instant Start |
| **Lamp Connection** | Parallel |

### CERTIFICATIONS

c UL us

RoHS COMPLIANT

energy APPROVED

## ELECTRICAL SPECIFICATIONS BY LAMP TYPE

| Lamp Type | No. of Lamps | Volts | Input Watts | Input Current (Amps) | Power Factor | Crest Factor | Ballast Factor | Ballast Efficacy Factor | Max THD% |
|---|---|---|---|---|---|---|---|---|---|
| F96T8 59W | 2 | 120 | 113 | 0.96 | 0.98 | <1.7 | 0.85 | 0.75 | 10 |
| | | 277 | 113 | 0.42 | 0.98 | <1.7 | 0.85 | 0.75 | 10 |
| | 1 | 120 | 68 | 0.57 | 0.99 | <1.7 | 1.02 | 1.50 | 10 |
| | | 277 | 70 | 0.26 | 0.97 | <1.7 | 1.05 | 1.50 | 12 |
| F96T8/ES 57W | 2 | 120 | 104 | 0.88 | 0.98 | <1.7 | 0.81 | 0.77 | 10 |
| | | 277 | 103 | 0.38 | 0.97 | <1.7 | 0.80 | 0.77 | 12 |
| | 1 | 120 | 66 | 0.56 | 0.98 | <1.7 | 1.03 | 1.56 | 10 |
| | | 277 | 67 | 0.25 | 0.96 | <1.7 | 1.04 | 1.55 | 12 |
| F96T8/ES 51W | 2 | 120 | 94 | 0.80 | 0.97 | <1.7 | 0.82 | 0.87 | 12 |
| | | 277 | 94 | 0.35 | 0.97 | <1.7 | 0.82 | 0.87 | 12 |
| | 1 | 120 | 61 | 0.52 | 0.98 | <1.7 | 1.06 | 1.74 | 10 |
| | | 277 | 61 | 0.23 | 0.96 | <1.7 | 1.06 | 1.74 | 12 |
| F72T8 46W | 2 | 120 | 90 | 0.77 | 0.97 | <1.7 | 0.83 | 0.92 | 12 |
| | | 277 | 91 | 0.34 | 0.96 | <1.7 | 0.84 | 0.92 | 12 |
| | 1 | 120 | 56 | 0.48 | 0.98 | <1.7 | 1.03 | 1.84 | 10 |
| | | 277 | 57 | 0.22 | 0.95 | <1.7 | 1.05 | 1.84 | 15 |

## PERFORMANCE:

-Sound Rated: A
-Minimum Starting Temperature: 0°F, -18°C
-Maximum Case Temperature: 167°F, 75°C
-3 Year Warranty
-Input Frequency 50Hz/60hz

## APPROVALS:

-Transient Protection Meets ANSI/IEEE C62.41 Cat A
-UL, cUL 935 listed

## PHYSICAL DIMENSIONS:

-Length (L): 9.45”
-Width (W): 1.38”
-Height (H): 1.18”
-Mounting (M): 8.90”

Lead Length:
-White, Black: 22”
-Blue: 46”
-Red: 70”

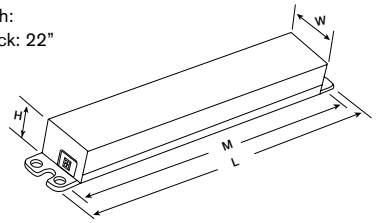


## WIRING DIAGRAM:

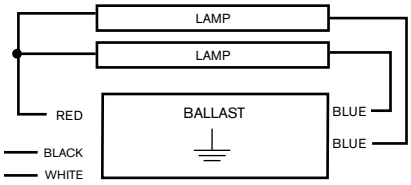


Two Lamp Application
(Cap off 1 Blue Lead for 1 Lamp Application)
Ballast Must Be Grounded

## $T_C$ POINT LOCATION:

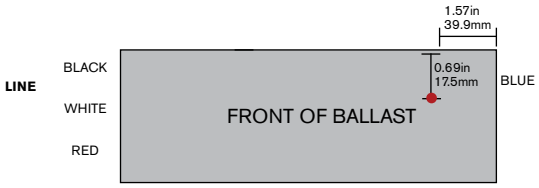

# hatch

**Part No.**
**HL275IS/12/W**
**For 2 F96 T12 LAMPS**

## ELECTRONIC LINEAR FLUORESCENT BALLAST

| | |
|---|---|
| **Input Voltage** | 120Vac ± 10% |
| **Ballast Factor** | Normal |
| **Starting Method** | Instant Start |
| **Lamp Connection** | Parallel |

### CERTIFICATIONS

c UL us

RoHS COMPLIANT

Energy APPROVED

## ELECTRICAL SPECIFICATIONS BY LAMP TYPE

| Lamp Type | No. of Lamps | Input Watts | Input Current (Amps) | Power Factor | Crest Factor | Ballast Factor | Ballast Efficacy Factor | Max THD% |
|---|---|---|---|---|---|---|---|---|
| F96T12 75W | 2 | 133 | 1.12 | 0.99 | <1.7 | 0.86 | 0.65 | 10 |
| | 1 | 83 | 0.70 | 0.99 | <1.7 | 1.02 | 1.23 | 10 |
| F96T12/ES 60W | 2 | 113 | 0.95 | 0.99 | <1.7 | 0.88 | 0.78 | 10 |
| | 1 | 71 | 0.60 | 0.99 | <1.7 | 1.05 | 1.48 | 10 |
| F84T12 70W | 2 | 122 | 1.04 | 0.98 | <1.7 | 0.88 | 0.72 | 10 |
| | 1 | 75 | 0.64 | 0.98 | <1.7 | 1.05 | 1.40 | 10 |
| F72T12 57W | 2 | 107 | 0.92 | 0.97 | <1.7 | 0.90 | 0.84 | 12 |
| | 1 | 66 | 0.57 | 0.97 | <1.7 | 1.04 | 1.58 | 12 |
| F64T12 52W | 2 | 93 | 0.78 | 0.99 | <1.7 | 0.90 | 0.97 | 12 |
| | 1 | 60 | 0.51 | 0.98 | <1.7 | 1.03 | 1.72 | 12 |
| F60T12 50W | 2 | 85 | 0.72 | 0.99 | <1.7 | 0.90 | 1.06 | 12 |
| | 1 | 56 | 0.47 | 0.99 | <1.7 | 1.02 | 1.82 | 12 |
| F48T12 40W | 2 | 76 | 0.67 | 0.95 | <1.7 | 0.92 | 1.21 | 15 |
| F48T12/ES 30W | 2 | 64 | 0.56 | 0.95 | <1.7 | 0.92 | 1.44 | 15 |

## PERFORMANCE:

-Sound Rated: A
-Minimum Starting Temperature: 0°F, -18°C
-Maximum Case Temperature: 167°F, 75°C
-Meets FCC Part 18 (Class A) Non-consumer limits
-3 Year Warranty
-Input Frequency 50Hz/60hz
-Ballast frequency for all listed lamps: 20kHz-33kHz

## APPROVALS:

-Transient Protection Meets ANSI/IEEE C62.41 Cat A
-UL, cUL 935 listed

## PHYSICAL DIMENSIONS:

-Length (L): 9.45”
-Width (W): 1.80”
-Height (H): 1.37”
-Mounting (M): 8.90”

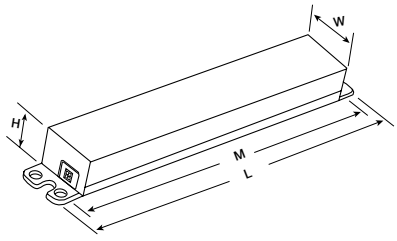


## WIRING DIAGRAM:

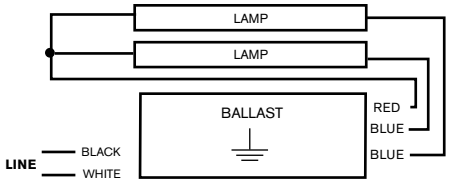


Two Lamp Application
(Cap off 1 Blue Lead for 1 Lamp Application)
Ballast Must Be Grounded

## $T_C$ POINT LOCATION:

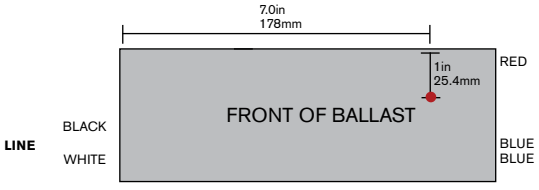

# hatch

**Part No.**
**HL275IS/UV/W**
**For 2 F96 T12 LAMPS**

## ELECTRONIC LINEAR FLUORESCENT BALLAST

| | |
|---|---|
| **Input Voltage** | 120~277Vac ± 10% |
| **Ballast Factor** | Normal |
| **Starting Method** | Instant Start |
| **Lamp Connection** | Parallel |

### CERTIFICATIONS

c UL us

RoHS COMPLIANT

Energy APPROVED

## ELECTRICAL SPECIFICATIONS BY LAMP TYPE

| Lamp Type | No. of Lamps | Volts | Input Watts | Input Current (Amps) | Power Factor | Crest Factor | Ballast Factor | Ballast Efficacy Factor | Max THD% |
|---|---|---|---|---|---|---|---|---|---|
| F96T12 75W | 2 | 120 | 133 | 1.12 | 0.99 | <1.7 | 0.90 | 0.68 | 10 |
| | | 277 | 135 | 0.49 | 0.99 | <1.7 | 0.90 | 0.67 | 10 |
| | 1 | 120 | 83 | 0.70 | 0.99 | <1.7 | 1.00 | 1.20 | 10 |
| | | 277 | 84 | 0.31 | 0.99 | <1.7 | 1.00 | 1.19 | 10 |
| F96T12/ES 60W | 2 | 120 | 112 | 0.95 | 0.99 | <1.7 | 0.90 | 0.80 | 10 |
| | | 277 | 115 | 0.42 | 0.99 | <1.7 | 0.90 | 0.78 | 10 |
| | 1 | 120 | 71 | 0.60 | 0.99 | <1.7 | 1.05 | 1.48 | 10 |
| | | 277 | 72 | 0.26 | 0.98 | <1.7 | 1.05 | 1.46 | 12 |
| F84T12 70W | 2 | 120 | 123 | 1.04 | 0.98 | <1.7 | 0.88 | 0.72 | 12 |
| | | 277 | 123 | 0.45 | 0.98 | <1.7 | 0.88 | 0.72 | 12 |
| | 1 | 120 | 75 | 0.64 | 0.98 | <1.7 | 1.05 | 1.40 | 12 |
| | | 277 | 76 | 0.28 | 0.98 | <1.7 | 1.05 | 1.38 | 12 |
| F72T12 57W | 2 | 120 | 106 | 0.92 | 0.97 | <1.7 | 0.90 | 0.84 | 12 |
| | | 277 | 107 | 0.40 | 0.97 | <1.7 | 0.90 | 0.84 | 12 |
| | 1 | 120 | 66 | 0.57 | 0.97 | <1.7 | 1.04 | 1.58 | 12 |
| | | 277 | 66 | 0.25 | 0.95 | <1.7 | 1.04 | 1.58 | 15 |
| F64T12 52W | 2 | 120 | 92 | 0.78 | 0.99 | <1.7 | 0.90 | 0.97 | 10 |
| | | 277 | 93 | 0.35 | 0.97 | <1.7 | 0.90 | 0.97 | 12 |
| | 1 | 120 | 60 | 0.51 | 0.98 | <1.7 | 1.03 | 1.72 | 12 |
| | | 277 | 64 | 0.24 | 0.97 | <1.7 | 1.03 | 1.61 | 12 |
| F60T12 50W | 2 | 120 | 85 | 0.72 | 0.99 | <1.7 | 0.90 | 1.06 | 10 |
| | | 277 | 86 | 0.32 | 0.97 | <1.7 | 0.90 | 1.06 | 12 |
| | 1 | 120 | 56 | 0.47 | 0.99 | <1.7 | 1.02 | 1.82 | 10 |
| | | 277 | 58 | 0.22 | 0.97 | <1.7 | 1.02 | 1.76 | 12 |
| F48T12 40W | 2 | 120 | 76 | 0.67 | 0.95 | <1.7 | 0.95 | 1.25 | 15 |
| | | 277 | 76 | 0.29 | 0.95 | <1.7 | 0.95 | 1.25 | 15 |
| F48T12/ES 30W | 2 | 120 | 64 | 0.56 | 0.95 | <1.7 | 0.95 | 1.48 | 15 |
| | | 277 | 64 | 0.24 | 0.95 | <1.7 | 0.95 | 1.48 | 15 |

## PERFORMANCE:

-Sound Rated: A
-Minimum Starting Temperature: 0°F, -18°C
-Maximum Case Temperature: 167°F, 75°C
-Meets FCC Part 18 (Class A) Non-consumer limits
-3 Year Warranty
-Input Frequency 50Hz/60hz
-Ballast frequency for all listed lamps: 20KHz-33KHz

## APPROVALS:

-Transient Protection Meets ANSI/IEEE C62.41 Cat A
-UL, cUL 935 listed

## PHYSICAL DIMENSIONS:

-Length (L): 9.45”
-Width (W): 1.80”
-Height (H): 1.37”
-Mounting (M): 8.90”

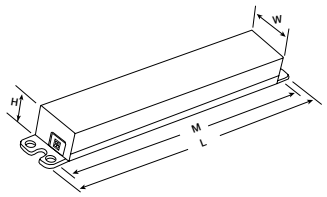


## WIRING DIAGRAM:

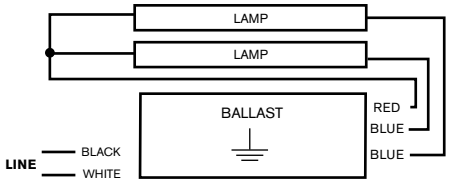


Two Lamp Application
(Cap off 1 Blue Lead for 1 Lamp Application)
Ballast Must Be Grounded

# HATCH

**PART NO.**
**HL286HO/IS/UV/W**
**For 2x96 WATT T8 LAMPS**

## ELECTRONIC LINEAR FLUORESCENT BALLAST

| | |
|---|---|
| **Input Voltage** | 120-277Vac ± 10% |
| **Ballast Factor** | Low |
| **Starting Method** | Instant Start |
| **Lamp Connection** | Parallel |

### CERTIFICATIONS

c UL us

RoHS COMPLIANT

## ELECTRICAL SPECIFICATIONS BY LAMP TYPE

| Lamp Type | No. of Lamps | Volts | Input Watts | Input Current (Amps) | Power Factor | Crest Factor | Ballast Factor | Ballast Efficacy Factor | Max THD% |
|---|---|---|---|---|---|---|---|---|---|
| F96T8/HO 86W | 2 | 120 | 148 | 1.25 | 0.99 | <1.7 | 0.84 | 0.57 | < 10 |
| | | 277 | 148 | 0.55 | 0.98 | <1.7 | 0.84 | 0.57 | < 10 |
| | 1 | 120 | 96 | 0.80 | 0.99 | <1.7 | 0.95 | 0.97 | < 10 |
| | | 277 | 96 | 0.36 | 0.97 | <1.7 | 0.95 | 0.95 | < 10 |

## PERFORMANCE:

-Sound Rated: A
-Minimum Starting Temperature: 0°F, -18°C
-Maximum Case Temperature: 167°F, 75°C
-Meets FCC Part 18 (Class A) Non-consumer limits
-5 Year Warranty
-Input Frequency 50Hz/60hz
-Ballast frequency for all listed lamps: > 40kHz

## APPROVALS:

-Transient Protection Meets ANSI/IEEE C62.41 Cat A
-UL, cUL 935 listed, Class P, Type 1 Outdoor

## PHYSICAL DIMENSIONS:

-Length (L): 9.50”
-Width (W): 2.36”
-Height (H): 1.69”
-Mounting (M): 8.90”

Lead Length:
-White, Black: 25”
-Blue: 58”
-Red: 66”

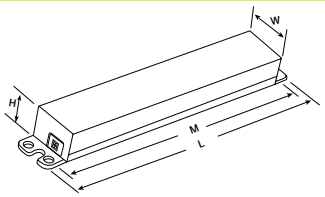


## WIRING DIAGRAM:

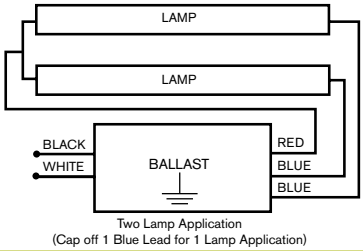


Two Lamp Application
(Cap off 1 Blue Lead for 1 Lamp Application)

## $T_C$ POINT LOCATION:

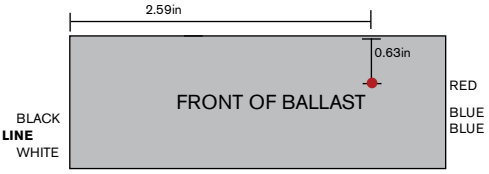


## COMPATIBLE WITH:

HATCH GEMINI
Lamp and Ballast. Perfectly Matched.

# hatch

**Part No.**
**HL286HO/PS/UV/W**
**For 2x96 WATT T8 LAMPS**

## ELECTRONIC LINEAR FLUORESCENT BALLAST

| | |
|---|---|
| **Input Voltage** | 120-277Vac ± 10% |
| **Ballast Factor** | Low |
| **Starting Method** | Programmed Start |
| **Lamp Connection** | Parallel |

### CERTIFICATIONS

c UL us

RoHS COMPLIANT

## ELECTRICAL SPECIFICATIONS BY LAMP TYPE

| Lamp Type | No. of Lamps | Volts | Input Watts | Input Current (Amps) | Power Factor | Crest Factor | Ballast Factor | Ballast Efficacy Factor | Max THD% |
|---|---|---|---|---|---|---|---|---|---|
| F96T8/HO 86W | 2 | 120 | 152 | 1.28 | 0.99 | <1.7 | 0.80 | 0.53 | 10 |
| | | 277 | 152 | 0.56 | 0.98 | <1.7 | 0.80 | 0.53 | 10 |
| | 1 | 120 | 92 | 0.78 | 0.99 | <1.7 | 0.91 | 0.99 | 10 |
| | | 277 | 93 | 0.35 | 0.96 | <1.7 | 0.91 | 0.99 | 15 |
| F72T8/HO 65W | 2 | 120 | 113 | 0.96 | 0.99 | <1.7 | 0.77 | 0.68 | 10 |
| | | 277 | 114 | 0.42 | 0.98 | <1.7 | 0.77 | 0.68 | 12 |
| | 1 | 120 | 71 | 0.60 | 0.99 | <1.7 | 0.91 | 1.28 | 10 |
| | | 277 | 71 | 0.27 | 0.96 | <1.7 | 0.91 | 1.28 | 15 |
| F60T8/HO 55W | 2 | 120 | 97 | 0.82 | 0.99 | <1.7 | 0.76 | 0.78 | 10 |
| | | 277 | 97 | 0.36 | 0.98 | <1.7 | 0.76 | 0.78 | 12 |
| | 1 | 120 | 63 | 0.53 | 0.99 | <1.7 | 0.90 | 1.43 | 10 |
| | | 277 | 63 | 0.24 | 0.95 | <1.7 | 0.90 | 1.43 | 15 |
| F48T8/HO 44W | 2 | 120 | 77 | 0.65 | 0.99 | <1.7 | 0.75 | 0.97 | 10 |
| | | 277 | 77 | 0.29 | 0.95 | <1.7 | 0.75 | 0.97 | 15 |
| | 1 | 120 | 50 | 0.43 | 0.99 | <1.7 | 0.87 | 1.74 | 10 |
| | | 277 | 51 | 0.20 | 0.93 | <1.7 | 0.87 | 1.70 | 15 |

### PERFORMANCE:

-Sound Rated: A
-Minimum Starting Temperature: -20°F, -29°C
-Maximum Case Temperature: 167°F, 75°C
-Meets FCC Part 18 (Class A) Non-consumer limits
-5 Year Warranty
-Input Frequency 50Hz/60hz
-Ballast frequency for all listed lamps: > 23kHz

### APPROVALS:

-Transient Protection Meets ANSI/IEEE C62.41 Cat A
-UL, cUL 935 listed, Class P, Type 1 Outdoor

### PHYSICAL DIMENSIONS:

-Length (L): 9.50”
-Width (W): 2.36”
-Height (H): 1.69”
-Mounting (M): 8.90”

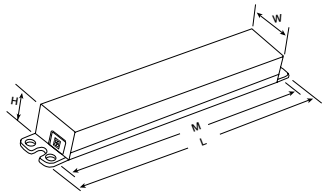


### WIRING DIAGRAM:

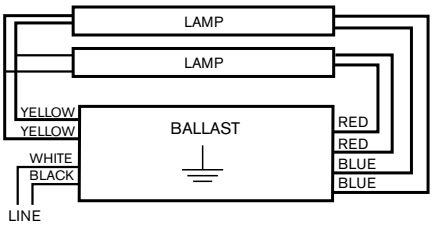


### $T_C$ POINT LOCATION:

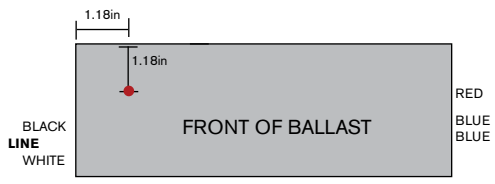

# hatch

**Part No.**
**HL296HO/IS/12/W**
**For 2x96 WATT T12HO LAMPS**

## ELECTRONIC LINEAR FLUORESCENT BALLAST

| | |
|---|---|
| **Input Voltage** | 120Vac ± 10% |
| **Ballast Factor** | Normal |
| **Starting Method** | Instant Start |
| **Lamp Connection** | Parallel |

### CERTIFICATIONS

c UL us

RoHS COMPLIANT

## ELECTRICAL SPECIFICATIONS BY LAMP TYPE

| Lamp Type | No. of Lamps | Volts | Input Watts | Input Current (Amps) | Power Factor | Crest Factor | Ballast Factor | Max THD% |
|---|---|---|---|---|---|---|---|---|
| F96T12/HO 110W | 2 | 120 | 185 | 1.55 | 0.99 | 1.70 | 0.90 | 10 |
| | 1 | 120 | 101 | 0.85 | 0.98 | 1.70 | 0.92 | 10 |
| F96T12/HO/ES 95W | 2 | 120 | 151 | 1.27 | 0.99 | 1.70 | 0.90 | 10 |
| F72T12/HO 85W | 2 | 120 | 145 | 1.20 | 0.99 | 1.70 | 0.90 | 10 |
| F60T12/HO 75W | 2 | 120 | 122 | 1.03 | 0.99 | 1.70 | 0.90 | 10 |
| F48T12/HO 60W | 2 | 120 | 99 | 0.83 | 0.98 | 1.70 | 0.90 | 10 |

### PERFORMANCE:

-Sound Rated: A
-Minimum Starting Temperature: -4°F, -20°C for HO Lamp
-Minimum Starting Temperature: 64°F, 18°C for HO/ES lamp
-Maximum Case Temperature: 167°F, 75°C
-Meets FCC Part 18 (Class A) Non-consumer limits
-3 Year Warranty
-Input Frequency 50Hz/60hz
-OCV: 600V
-Ballast frequency for all listed lamps: 20KHz-33KHz

### APPROVALS:

-Transient Protection Meets ANSI/IEEE C62.41 Cat A
-UL, cUL 935 listed

### PHYSICAL DIMENSIONS:

-Length (L): 11.8”
-Width (W): 2.15”
-Height (H): 1.61”
-Mounting (M): 11.0”
-Metal Case

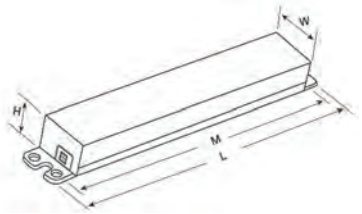


### WIRING DIAGRAM:

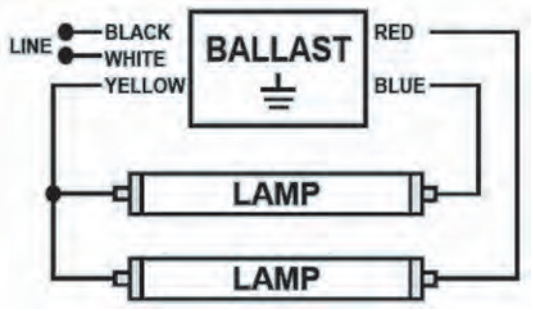


*For one lamp, cap YELLOW wire and connect the lamp between red and blue.

### $T_C$ POINT LOCATION:

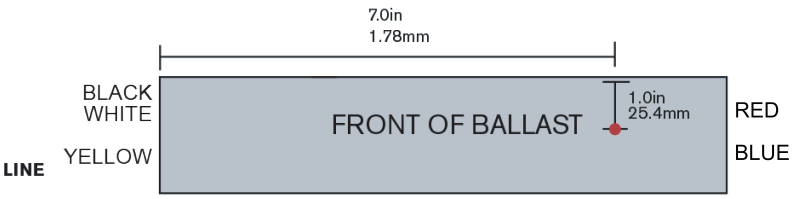

# hatch

PART NO.
**HL296HO/IS/UV/W**
**For 2x96 WATT T12HO LAMPS**

## ELECTRONIC LINEAR FLUORESCENT BALLAST

| | |
|---|---|
| **Input Voltage** | 120~277Vac ± 10% |
| **Ballast Factor** | Normal |
| **Starting Method** | Instant Start |
| **Lamp Connection** | Parallel |

### CERTIFICATIONS

c UL us

RoHS COMPLIANT

## ELECTRICAL SPECIFICATIONS BY LAMP TYPE

| Lamp Type | No. of Lamps | Volts | Input Watts | Input Current (Amps) | Power Factor | Crest Factor | Ballast Factor | Max THD% |
|---|---|---|---|---|---|---|---|---|
| F96T12/HO 110W | 2 | 120 | 189 | 1.5 | 0.99 | 1.70 | 0.85 | 10 |
| | 2 | 277 | 189 | 0.70 | 0.97 | 1.70 | 0.85 | 10 |
| | 1 | 120 | 104 | 0.86 | 0.99 | 1.70 | 0.92 | 10 |
| | 1 | 277 | 104 | 0.40 | 0.93 | 1.70 | 0.92 | 10 |
| F96T12/HO/ES 95W | 2 | 120 | 157 | 1.30 | 0.99 | 1.70 | 0.90 | 10 |
| | 2 | 277 | 158 | 0.58 | 0.96 | 1.70 | 0.90 | 10 |
| F72T12/HO 85W | 2 | 120 | 146 | 1.21 | 0.99 | 1.70 | 0.90 | 10 |
| | 2 | 277 | 147 | 0.55 | 0.96 | 1.70 | 0.90 | 10 |
| F60T12/HO 75W | 2 | 120 | 124 | 1.04 | 0.99 | 1.70 | 0.90 | 10 |
| | 2 | 277 | 126 | 0.48 | 0.95 | 1.70 | 0.90 | 10 |
| F48T12/HO 60W | 2 | 120 | 103 | 0.86 | 0.99 | 1.70 | 0.90 | 10 |
| | 2 | 277 | 104 | 0.40 | 0.93 | 1.70 | 0.90 | 10 |

### PERFORMANCE:

-Sound Rated: A
-Minimum Starting Temperature: -4°F, -20°C for HO Lamp
-Minimum Starting Temperature: 64°F, 18°C for HO/ES lamp
-Maximum Case Temperature: 167°F, 75°C
-Meets FCC Part 18 (Class A) Non-consumer limits
-3 Year Warranty
-Input Frequency 50Hz/60hz
-OCV: 600V
-Ballast frequency for all listed lamps: 20KHz-33KHz

### APPROVALS:

-Transient Protection Meets ANSI/IEEE C62.41 Cat A
-UL, cUL 935 listed

### PHYSICAL DIMENSIONS:

-Length (L): 11.8”
-Width (W): 2.15”
-Height (H): 1.61”
-Mounting (M): 11.0”
-Metal Case

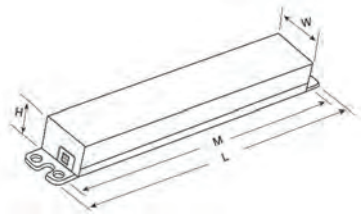


### WIRING DIAGRAM:

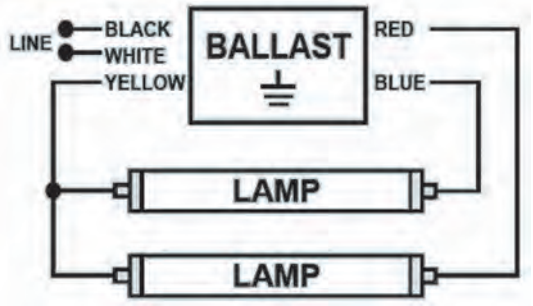


*For one lamp, cap YELLOW wire and connect the lamp between red and blue.

### $T_C$ POINT LOCATION:

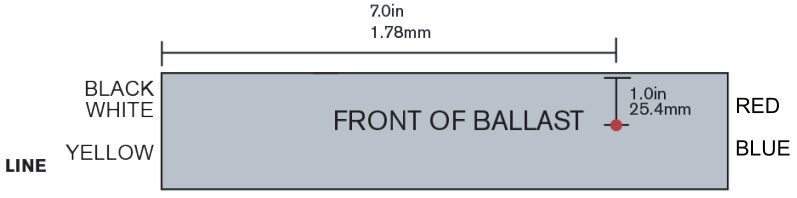

# hatch

**Part No.**
**HL332APS/UV/HE/W**
**For 3x32 WATT T8 LAMPS**

## ELECTRONIC LINEAR FLUORESCENT BALLAST

| | |
|---|---|
| **Input Voltage** | 120~277Vac ± 10% |
| **Ballast Factor** | Low |
| **Starting Method** | Programmed Start |
| **Lamp Connection** | Parallel |

### CERTIFICATIONS

c UL us

RoHS COMPLIANT

## ELECTRICAL SPECIFICATIONS BY LAMP TYPE

| Lamp Type | No. of Lamps | Volts | Input Watts | Input Current (Amps) | Power Factor | Crest Factor | Ballast Factor | Ballast Efficacy Factor | Max THD% |
|---|---|---|---|---|---|---|---|---|---|
| F32T8 32W | 3 | 120 | 79 | 0.65 | 0.99 | <1.7 | 0.77 | 0.97 | 10 |
| | | 277 | 79 | 0.29 | 0.98 | <1.7 | 0.77 | 0.97 | 10 |
| | 2 | 120 | 58 | 0.49 | 0.99 | <1.7 | 0.86 | 1.48 | 10 |
| | | 277 | 58 | 0.21 | 0.98 | <1.7 | 0.86 | 1.48 | 10 |
| F32T8 30W | 3 | 120 | 73 | 0.60 | 0.99 | <1.7 | 0.75 | 1.03 | 10 |
| | | 277 | 73 | 0.27 | 0.98 | <1.7 | 0.75 | 1.03 | 10 |
| | 2 | 120 | 56 | 0.47 | 0.99 | <1.7 | 0.84 | 1.50 | 10 |
| | | 277 | 56 | 0.21 | 0.97 | <1.7 | 0.84 | 1.50 | 12 |
| F32T8 28W | 3 | 120 | 69 | 0.57 | 0.99 | <1.7 | 0.75 | 1.09 | 10 |
| | | 277 | 69 | 0.25 | 0.98 | <1.7 | 0.75 | 1.09 | 10 |
| | 2 | 120 | 54 | 0.45 | 0.99 | <1.7 | 0.86 | 1.59 | 10 |
| | | 277 | 55 | 0.20 | 0.97 | <1.7 | 0.86 | 1.56 | 12 |
| F32T8 25W | 3 | 120 | 64 | 0.53 | 0.99 | <1.7 | 0.79 | 1.23 | 10 |
| | | 277 | 65 | 0.24 | 0.98 | <1.7 | 0.79 | 1.22 | 10 |
| | 2 | 120 | 51 | 0.42 | 0.99 | <1.7 | 0.92 | 1.80 | 10 |
| | | 277 | 52 | 0.19 | 0.97 | <1.7 | 0.92 | 1.77 | 12 |
| F25T8 25W | 3 | 120 | 62 | 0.51 | 0.99 | <1.7 | 0.74 | 1.19 | 10 |
| | | 277 | 62 | 0.23 | 0.98 | <1.7 | 0.74 | 1.19 | 10 |
| | 2 | 120 | 49 | 0.40 | 0.99 | <1.7 | 0.88 | 1.80 | 10 |
| | | 277 | 50 | 0.18 | 0.97 | <1.7 | 0.88 | 1.76 | 12 |
| F17T8 17W | 3 | 120 | 45 | 0.37 | 0.99 | <1.7 | 0.77 | 1.71 | 10 |
| | | 277 | 45 | 0.17 | 0.96 | <1.7 | 0.77 | 1.71 | 12 |
| | 2 | 120 | 35 | 0.30 | 0.99 | <1.7 | 0.84 | 2.40 | 10 |
| | | 277 | 36 | 0.14 | 0.95 | <1.7 | 0.84 | 2.33 | 15 |
| F40T8 40W | 2 | 120 | 74 | 0.61 | 0.99 | <1.7 | 0.82 | 1.12 | 10 |
| | | 277 | 74 | 0.27 | 0.98 | <1.7 | 0.82 | 1.12 | 10 |

## PERFORMANCE:

-Sound Rated: A
-Minimum Starting Temperature: 0°F, -18°C
-Maximum Case Temperature: 167°F, 75°C
-Meets FCC Part 18 (Class A) Non-consumer limits
-5 Year Warranty
-Input Frequency 50Hz/60hz
-Ballast frequency for all listed lamps: >40kHz

## APPROVALS:

-Transient Protection Meets ANSI/IEEE C62.41 Cat A
-UL, cUL 935 listed, Class P, Type 1 Outdoor

## PHYSICAL DIMENSIONS:

-Length (L): 9.50”
-Width (W): 1.65”
-Height (H): 1.18”
-Mounting (M): 8.9”

Lead Length:
-White, Black: 25”
-Blue: 32”
-Red: 32”
-Yellow: 48”
-Red/White: 32”

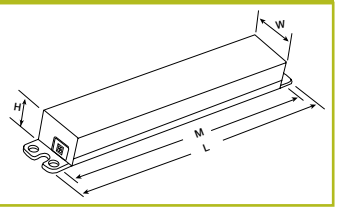


## WIRING DIAGRAM:

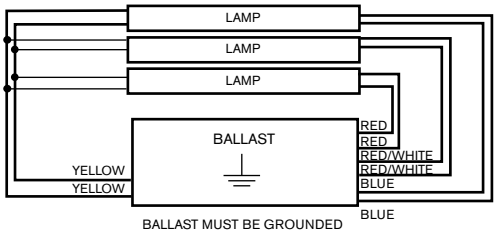


## $T_C$ POINT LOCATION:

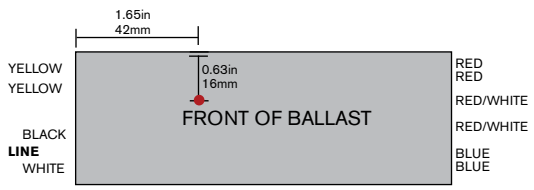

# HATCH

**PART NO.**
**HL332BPS/UV/HE/W**
**For 3x32 WATT T8 LAMPS**

## ELECTRONIC LINEAR FLUORESCENT BALLAST

| | |
|---|---|
| **Input Voltage** | 120~277Vac ± 10% |
| **Ballast Factor** | Normal |
| **Starting Method** | Programmed Start |
| **Lamp Connection** | Parallel |

### CERTIFICATIONS

c UL us

RoHS COMPLIANT

## ELECTRICAL SPECIFICATIONS BY LAMP TYPE

| Lamp Type | No. of Lamps | Volts | Input Watts | Input Current (Amps) | Power Factor | Crest Factor | Ballast Factor | Ballast Efficacy Factor | Max THD% |
|---|---|---|---|---|---|---|---|---|---|
| F32T8 32W | 3 | 120 | 88 | 0.73 | 0.99 | <1.7 | 0.88 | 1.00 | 10 |
| | | 277 | 88 | 0.32 | 0.98 | <1.7 | 0.88 | 1.00 | 10 |
| | 2 | 120 | 68 | 0.57 | 0.99 | <1.7 | 0.98 | 1.44 | 10 |
| | | 277 | 69 | 0.25 | 0.98 | <1.7 | 0.98 | 1.42 | 10 |
| F32T8 30W | 3 | 120 | 81 | 0.68 | 0.99 | <1.7 | 0.88 | 1.09 | 10 |
| | | 277 | 82 | 0.30 | 0.98 | <1.7 | 0.88 | 1.07 | 10 |
| | 2 | 120 | 62 | 0.52 | 0.99 | <1.7 | 0.95 | 1.53 | 10 |
| | | 277 | 63 | 0.23 | 0.97 | <1.7 | 0.95 | 1.51 | 10 |
| F32T8 28W<br>Available with Gemini Lamp and Ballast Systems | 3 | 120 | 78 | 0.65 | 0.99 | <1.7 | 0.88 | 1.13 | 10 |
| | | 277 | 79 | 0.29 | 0.98 | <1.7 | 0.88 | 1.11 | 10 |
| | 2 | 120 | 61 | 0.52 | 0.99 | <1.7 | 1.00 | 1.64 | 10 |
| | | 277 | 61 | 0.23 | 0.97 | <1.7 | 1.00 | 1.64 | 10 |
| F32T8 25W<br>Available with Gemini Lamp and Ballast Systems | 3 | 120 | 72 | 0.60 | 0.99 | <1.7 | 0.90 | 1.25 | 10 |
| | | 277 | 73 | 0.27 | 0.98 | <1.7 | 0.90 | 1.23 | 10 |
| | 2 | 120 | 55 | 0.46 | 1.00 | <1.7 | 0.97 | 1.77 | 10 |
| | | 277 | 56 | 0.21 | 0.98 | <1.7 | 0.98 | 1.75 | 10 |
| F25T8 25W | 3 | 120 | 68 | 0.58 | 0.99 | <1.7 | 0.88 | 1.29 | 10 |
| | | 277 | 69 | 0.26 | 0.98 | <1.7 | 0.88 | 1.28 | 10 |
| | 2 | 120 | 53 | 0.44 | 0.98 | <1.7 | 0.95 | 1.79 | 10 |
| | | 277 | 54 | 0.20 | 0.97 | <1.7 | 0.95 | 1.76 | 10 |
| F17T8 17W | 3 | 120 | 50 | 0.42 | 0.98 | <1.7 | 0.90 | 1.80 | 10 |
| | | 277 | 51 | 0.19 | 0.97 | <1.7 | 0.90 | 1.77 | 10 |
| | 2 | 120 | 40 | 0.33 | 0.98 | <1.7 | 0.98 | 2.45 | 10 |
| | | 277 | 41 | 0.15 | 0.95 | <1.7 | 0.98 | 2.39 | 12 |
| F40T8 40W | 2 | 120 | 80 | 0.67 | 0.99 | <1.7 | 0.95 | 1.19 | 10 |
| | | 277 | 81 | 0.63 | 0.98 | <1.7 | 0.95 | 1.17 | 10 |

## PERFORMANCE:

-Sound Rated: A
-Minimum Starting Temperature: 0°F, -18°C
-Maximum Case Temperature: 167°F, 75°C
-Meets FCC Part 18 (Class A) Non-consumer limits
-5 Year Warranty
-Input Frequency 50Hz/60hz
-Ballast frequency for all listed lamps: >40kHz

## APPROVALS:

-HL Type - Hazardous Location
-Transient Protection Meets ANSI/IEEE C62.41 Cat A
-UL, cUL 935 listed, Class P, Type 1 Outdoor
-RoHS compliance

## PHYSICAL DIMENSIONS:

-Length (L): 9.50"
-Width (W): 1.65"
-Height (H): 1.18"
-Mounting (M): 8.9"

Lead Length:
-White, Black: 25"
-Blue: 32"
-Red: 32"
-Yellow: 48"
-Red/White: 32"

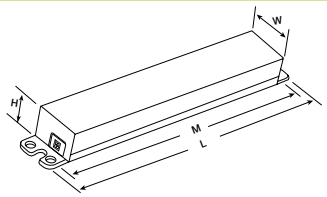


## WIRING DIAGRAM:

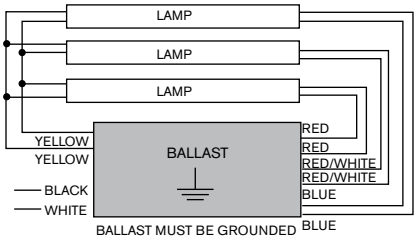


## $T_C$ POINT LOCATION:

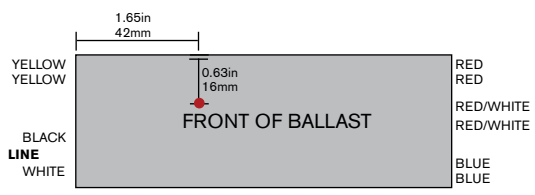


## COMPATIBLE WITH:

HATCH GEMINI
Lamp and Ballast. Perfectly Matched.

# hatch

**Part No.**
**HL332CPS/UV/HE/W**
**For 3x32 WATT T8 LAMPS**

## ELECTRONIC LINEAR FLUORESCENT BALLAST

| | |
|---|---|
| **Input Voltage** | 120~277Vac ± 10% |
| **Ballast Factor** | High |
| **Starting Method** | Programmed Start |
| **Lamp Connection** | Parallel |

### CERTIFICATIONS

c UL us

RoHS COMPLIANT

## ELECTRICAL SPECIFICATIONS BY LAMP TYPE

| Lamp Type | No. of Lamps | Volts | Input Watts | Input Current (Amps) | Power Factor | Crest Factor | Ballast Factor | Ballast Efficacy Factor | Max THD% |
|---|---|---|---|---|---|---|---|---|---|
| F32T8 32W | 3 | 120 | 114 | 0.96 | 0.99 | <1.7 | 1.18 | 1.04 | 10 |
| | | 277 | 114 | 0.41 | 0.98 | <1.7 | 1.18 | 1.04 | 10 |
| | 2 | 120 | 88 | 0.73 | 0.99 | <1.7 | 1.35 | 1.53 | 10 |
| | | 277 | 88 | 0.32 | 0.98 | <1.7 | 1.35 | 1.53 | 12 |
| F32T8 30W | 3 | 120 | 104 | 0.88 | 0.99 | <1.7 | 1.18 | 1.13 | 10 |
| | | 277 | 104 | 0.38 | 0.98 | <1.7 | 1.18 | 1.13 | 10 |
| | 2 | 120 | 80 | 0.67 | 0.99 | <1.7 | 1.33 | 1.66 | 10 |
| | | 277 | 80 | 0.30 | 0.97 | <1.7 | 1.33 | 1.66 | 12 |
| F32T8 28W | 3 | 120 | 99 | 0.83 | 0.99 | <1.7 | 1.18 | 1.19 | 10 |
| | | 277 | 99 | 0.36 | 0.98 | <1.7 | 1.18 | 1.19 | 10 |
| | 2 | 120 | 76 | 0.64 | 0.99 | <1.7 | 1.34 | 1.76 | 10 |
| | | 277 | 76 | 0.28 | 0.97 | <1.7 | 1.34 | 1.76 | 12 |
| F32T8 25W | 3 | 120 | 89 | 0.75 | 0.99 | <1.7 | 1.19 | 1.34 | 10 |
| | | 277 | 89 | 0.33 | 0.98 | <1.7 | 1.19 | 1.34 | 10 |
| | 2 | 120 | 69 | 0.58 | 0.99 | <1.7 | 1.37 | 1.99 | 10 |
| | | 277 | 69 | 0.26 | 0.97 | <1.7 | 1.37 | 1.99 | 12 |
| F25T8 25W | 3 | 120 | 87 | 0.73 | 0.99 | <1.7 | 1.15 | 1.32 | 10 |
| | | 277 | 87 | 0.32 | 0.98 | <1.7 | 1.15 | 1.32 | 10 |
| | 2 | 120 | 68 | 0.57 | 0.99 | <1.7 | 1.33 | 2.00 | 10 |
| | | 277 | 68 | 0.25 | 0.97 | <1.7 | 1.33 | 2.00 | 12 |
| F17T8 17W | 3 | 120 | 62 | 0.52 | 0.99 | <1.7 | 1.18 | 1.90 | 10 |
| | | 277 | 62 | 0.23 | 0.96 | <1.7 | 1.18 | 1.90 | 12 |
| | 2 | 120 | 49 | 0.40 | 0.99 | <1.7 | 1.30 | 2.65 | 10 |
| | | 277 | 49 | 0.19 | 0.95 | <1.7 | 1.30 | 2.65 | 15 |
| F40T8 40W | 2 | 120 | 104 | 0.88 | 0.99 | <1.7 | 1.18 | 1.13 | 10 |
| | | 277 | 104 | 0.38 | 0.98 | <1.7 | 1.18 | 1.13 | 10 |

### PERFORMANCE:

-Sound Rated: A
-Minimum Starting Temperature: 0°F, -18°C
-Maximum Case Temperature: 167°F, 75°C
-Meets FCC Part 18 (Class A) Non-consumer limits
-5 Year Warranty
-Input Frequency 50Hz/60hz
-Ballast frequency for all listed lamps: >40kHz

### APPROVALS:

-Transient Protection Meets ANSI/IEEE C62.41 Cat A
-UL, cUL 935 listed, Class P, Type 1 Outdoor

### PHYSICAL DIMENSIONS:

-Length (L): 9.50”
-Width (W): 1.65”
-Height (H): 1.18”
-Mounting (M): 8.9”

Lead Length:
-White, Black: 25”
-Blue: 32”
-Red: 32”
-Yellow: 48”
-Red/White: 32”

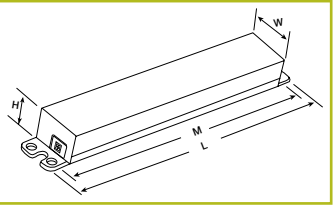


### WIRING DIAGRAM:

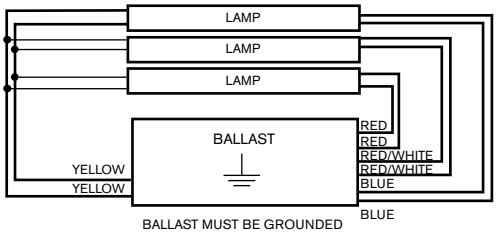


BALLAST MUST BE GROUNDED

### $T_C$ POINT LOCATION:

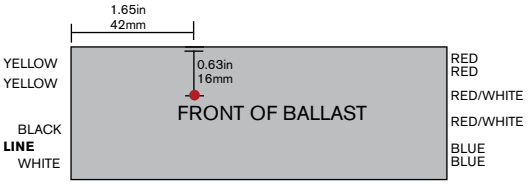

# HATCH

## 4 x 32 WATT T8 LAMPS | HL432AIS/34/W

## LINEAR FLUORESCENT BALLAST

| | | | | | |
|---|---|---|---|---|---|
| Ballast Type | Electronic | Starting Method | Instant Start | Lamp Connection | Parallel |
| Input Voltage | 347Vac ± 10% | Input Frequency | 60Hz / 50Hz | Low Ballast Factor | |

## ELECTRICAL SPECIFICATIONS:

| Lamp Type | No. of Lamp | Volts | Input Watts | Input Current (Amps) | Power Factor | Crest Factor | Ballast Factor | Ballast Efficacy Factor | Max. THD % |
|---|---|---|---|---|---|---|---|---|---|
| F40T8 | 3 | 347 | 101 | 0.31 | 0.99 | 1.6 | 0.78 | 0.77 | 10 |
| F32T8 | 4 | 347 | 99 | 0.29 | 0.99 | 1.6 | 0.73 | 0.74 | 10 |
| | 3 | 347 | 83 | 0.24 | 0.98 | 1.6 | 0.79 | 0.95 | 10 |
| F25T8 | 4 | 347 | 78 | 0.23 | 0.99 | 1.6 | 0.70 | 0.90 | 10 |
| | 3 | 347 | 65 | 0.19 | 0.99 | 1.6 | 0.76 | 1.17 | 10 |
| F17T8 | 4 | 347 | 58 | 0.17 | 0.99 | 1.6 | 0.74 | 1.28 | 10 |
| | 3 | 347 | 49 | 0.14 | 0.98 | 1.6 | 0.78 | 1.59 | 10 |

## PERFORMANCE:

- Sound Rated: A
- Minimum Starting Temperature: 0ºF , -18ºC
- Maximum Case Temperature: 167ºF , 75ºC
- Meets FCC Part 18 (Class B) Consumer Limits
- Transient Protection meets ANSI/IEEE C62.41 Cat. A
- Ballast frequency for all listed lamps: 20KHz-33KHz
- 5-Year Warranty

Gemini
Lamp and Ballast Systems

## APPROVALS:

- UL, cUL 935 listed
- Hazardous Location Approved

RoHS COMPLIANT

## PHYSICAL DIMENSIONS:

Length (L): 9.50″
Width (W): 1.70″
Height (H): 1.15″
Mounting (M): 8.90″
Lead Length:
White, Black: 25″
Blue: 31″
Red: 31″
Yellow: 48″

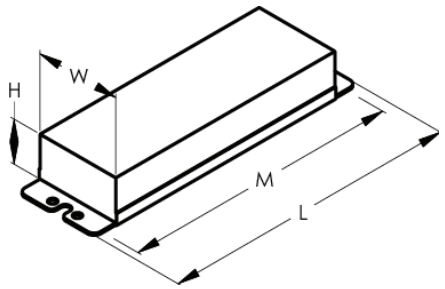


## WIRING DIAGRAM:

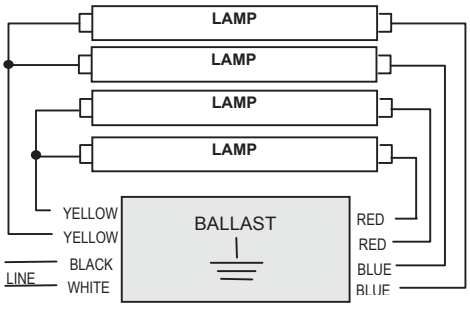


Four Lamps Application
(Cap off 1 Blue Lead for 3 lamp application)

## HOT SPOT LOCATION:

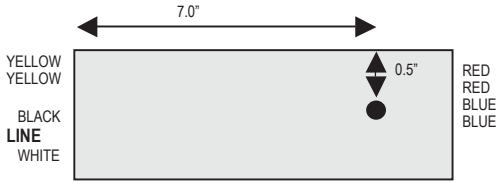

# hatch

**Part No.**
**HL432APS/UV/HE/W**
**For 4x32 WATT T8 LAMPS**

## ELECTRONIC LINEAR FLUORESCENT BALLAST

| | |
|---|---|
| **Input Voltage** | 120~277Vac ± 10% |
| **Ballast Factor** | Low |
| **Starting Method** | Programmed Start |
| **Lamp Connection** | Parallel |

### CERTIFICATIONS

c UL us

RoHS COMPLIANT

## ELECTRICAL SPECIFICATIONS BY LAMP TYPE

| Lamp Type | No. of Lamps | Volts | Input Watts | Input Current (Amps) | Power Factor | Crest Factor | Ballast Factor | Ballast Efficacy Factor | Max THD% |
|---|---|---|---|---|---|---|---|---|---|
| F32T8 32W | 4 | 120 | 97 | 0.82 | 0.99 | <1.7 | 0.74 | 0.76 | 10 |
| | | 277 | 97 | 0.35 | 0.99 | <1.7 | 0.74 | 0.76 | 10 |
| | 3 | 120 | 78 | 0.66 | 0.99 | <1.7 | 0.78 | 1.00 | 10 |
| | | 277 | 78 | 0.29 | 0.98 | <1.7 | 0.79 | 1.01 | 10 |
| F32T8 30W | 4 | 120 | 91 | 0.77 | 0.99 | <1.7 | 0.71 | 0.79 | 10 |
| | | 277 | 91 | 0.34 | 0.98 | <1.7 | 0.72 | 0.80 | 10 |
| | 3 | 120 | 75 | 0.63 | 0.99 | <1.7 | 0.78 | 1.05 | 10 |
| | | 277 | 76 | 0.28 | 0.98 | <1.7 | 0.79 | 1.04 | 10 |
| F32T8 28W | 4 | 120 | 87 | 0.73 | 0.99 | <1.7 | 0.73 | 0.84 | 10 |
| | | 277 | 88 | 0.32 | 0.98 | <1.7 | 0.75 | 0.85 | 10 |
| | 3 | 120 | 72 | 0.61 | 0.99 | <1.7 | 0.80 | 1.12 | 10 |
| | | 277 | 73 | 0.27 | 0.98 | <1.7 | 0.82 | 1.12 | 10 |
| F32T8 25W | 4 | 120 | 80 | 0.67 | 0.99 | <1.7 | 0.75 | 0.94 | 10 |
| | | 277 | 81 | 0.30 | 0.98 | <1.7 | 0.76 | 0.94 | 10 |
| | 3 | 120 | 67 | 0.56 | 0.99 | <1.7 | 0.81 | 1.21 | 10 |
| | | 277 | 68 | 0.25 | 0.98 | <1.7 | 0.82 | 1.21 | 10 |
| F25T8 25W | 4 | 120 | 77 | 0.65 | 0.99 | <1.7 | 0.73 | 0.94 | 10 |
| | | 277 | 78 | 0.29 | 0.98 | <1.7 | 0.73 | 0.94 | 10 |
| | 3 | 120 | 65 | 0.55 | 0.99 | <1.7 | 0.80 | 1.23 | 10 |
| | | 277 | 66 | 0.24 | 0.98 | <1.7 | 0.80 | 1.22 | 10 |
| F17T8 17W | 4 | 120 | 55 | 0.46 | 0.99 | <1.7 | 0.73 | 1.34 | 10 |
| | | 277 | 56 | 0.21 | 0.97 | <1.7 | 0.74 | 1.32 | 12 |
| | 3 | 120 | 48 | 0.40 | 0.99 | <1.7 | 0.81 | 1.69 | 10 |
| | | 277 | 49 | 0.18 | 0.96 | <1.7 | 0.82 | 1.67 | 12 |
| F40T8 40W | 3 | 120 | 99 | 0.83 | 0.99 | <1.7 | 0.77 | 0.78 | 10 |
| | | 277 | 99 | 0.36 | 0.99 | <1.7 | 0.79 | 0.80 | 10 |

## PERFORMANCE:

-Sound Rated: A
-Minimum Starting Temperature: 0°F, -18°C
-Maximum Case Temperature: 167°F, 75°C
-Meets FCC Part 18 (Class A) Non-consumer limits
-5 Year Warranty
-Input Frequency 50Hz/60hz
-Ballast frequency for all listed lamps: >40kHz

## APPROVALS:

-Transient Protection Meets ANSI/IEEE C62.41 Cat A
-UL, cUL 935 listed, Class P, Type 1 Outdoor

## PHYSICAL DIMENSIONS:

-Length (L): 9.50”
-Width (W): 1.65”
-Height (H): 1.18”
-Mounting (M): 8.9”

Lead Length:
-White, Black: 25”
-Blue: 33”
-Red: 33”
-Yellow: 48”
-Red/White: 33”
-Blue/White: 33”

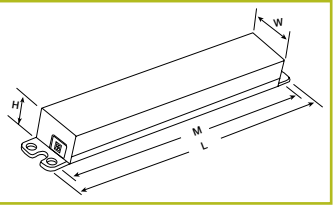


## WIRING DIAGRAM:

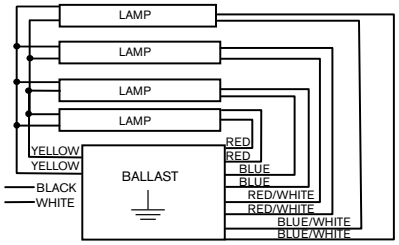


## $T_C$ POINT LOCATION:

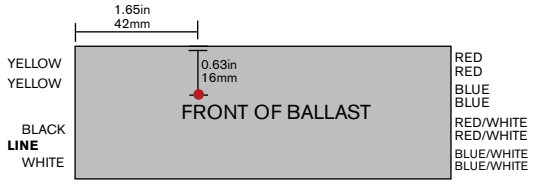

# HATCH

**PART NO.**
**HL432BIS/UV/HE/W**
**For 4x32 WATT T8 LAMPS**

## ELECTRONIC LINEAR FLUORESCENT BALLAST

| | |
|---|---|
| **Input Voltage** | 120~277Vac ± 10% |
| **Ballast Factor** | Normal |
| **Starting Method** | Instant Start |
| **Lamp Connection** | Parallel |

### CERTIFICATIONS

c UL us

RoHS COMPLIANT

## ELECTRICAL SPECIFICATIONS BY LAMP TYPE

| Lamp Type | No. of Lamps | Volts | Input Watts | Input Current (Amps) | Power Factor | Crest Factor | Ballast Factor | Ballast Efficacy Factor | Max THD% |
|---|---|---|---|---|---|---|---|---|---|
| F32T8 32W | 4 | 120 | 110 | 0.92 | 0.99 | <1.7 | 0.88 | 0.80 | 10 |
| | | 277 | 106 | 0.38 | 0.99 | <1.7 | 0.87 | 0.82 | 10 |
| | 3 | 120 | 89 | 0.74 | 0.99 | <1.7 | 0.94 | 1.06 | 10 |
| | | 277 | 88 | 0.32 | 0.98 | <1.7 | 0.95 | 1.08 | 10 |
| F32T8 30W | 4 | 120 | 105 | 0.88 | 0.99 | <1.7 | 0.86 | 0.82 | 10 |
| | | 277 | 106 | 0.38 | 0.98 | <1.7 | 0.87 | 0.82 | 10 |
| | 3 | 120 | 85 | 0.71 | 0.99 | <1.7 | 0.93 | 1.09 | 10 |
| | | 277 | 85 | 0.31 | 0.97 | <1.7 | 0.93 | 1.09 | 12 |
| F32T8 28W<br>Available with Gemini Lamp and Ballast Systems | 4 | 120 | 100 | 0.83 | 0.99 | <1.7 | 0.88 | 0.88 | 10 |
| | | 277 | 100 | 0.36 | 0.98 | <1.7 | 0.88 | 0.88 | 10 |
| | 3 | 120 | 83 | 0.69 | 0.99 | <1.7 | 0.98 | 1.18 | 10 |
| | | 277 | 84 | 0.30 | 0.97 | <1.7 | 0.99 | 1.18 | 12 |
| F32T8 25W<br>Available with Gemini Lamp and Ballast Systems | 4 | 120 | 94 | 0.78 | 0.99 | <1.7 | 0.94 | 1.00 | 10 |
| | | 277 | 94 | 0.34 | 0.98 | <1.7 | 0.93 | 0.99 | 10 |
| | 3 | 120 | 77 | 0.64 | 0.99 | <1.7 | 1.02 | 1.32 | 10 |
| | | 277 | 77 | 0.28 | 0.97 | <1.7 | 1.02 | 1.32 | 12 |
| F25T8 25W | 4 | 120 | 83 | 0.69 | 0.99 | <1.7 | 0.82 | 0.99 | 10 |
| | | 277 | 84 | 0.30 | 0.97 | <1.7 | 0.83 | 0.99 | 12 |
| | 3 | 120 | 69 | 0.58 | 0.99 | <1.7 | 0.91 | 1.32 | 10 |
| | | 277 | 70 | 0.25 | 0.97 | <1.7 | 0.92 | 1.31 | 12 |
| F17T8 17W | 4 | 120 | 62 | 0.52 | 0.99 | <1.7 | 0.90 | 1.45 | 10 |
| | | 277 | 62 | 0.22 | 0.96 | <1.7 | 0.90 | 1.45 | 12 |
| | 3 | 120 | 51 | 0.43 | 0.99 | <1.7 | 0.99 | 1.94 | 10 |
| | | 277 | 51 | 0.18 | 0.95 | <1.7 | 0.99 | 1.94 | 15 |
| F40T8 40W | 3 | 120 | 109 | 0.91 | 0.99 | <1.7 | 0.90 | 0.83 | 10 |
| | | 277 | 108 | 0.39 | 0.98 | <1.7 | 0.89 | 0.82 | 10 |

## PERFORMANCE:

-Sound Rated: A
-Minimum Starting Temperature: 0°F, -18°C
-Maximum Case Temperature: 167°F, 75°C
-Meets FCC Part 18 (Class A) Non-consumer limits
-5 Year Warranty
-Input Frequency 50Hz/60hz
-Ballast frequency for all listed lamps: >40kHz

## APPROVALS:

-Transient Protection Meets ANSI/IEEE C62.41 Cat A
-UL, cUL 935 listed, Class P, Type 1 Outdoor

## PHYSICAL DIMENSIONS:

-Length (L): 9.50"
-Width (W): 1.38"
-Height (H): 1.18"
-Mounting (M): 8.9"

Lead Length:
-White, Black: 25"
-Blue: 31"
-Red: 31"
-Yellow: 45"

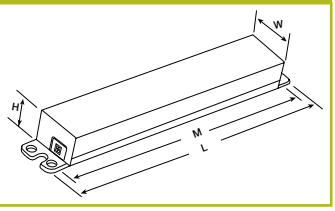


## WIRING DIAGRAM:

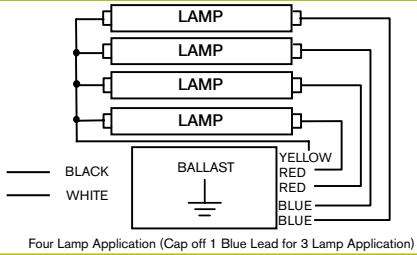


Four Lamp Application (Cap off 1 Blue Lead for 3 Lamp Application)

## $T_C$ POINT LOCATION:

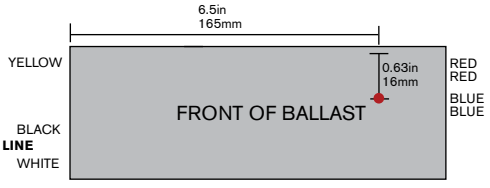


## COMPATIBLE WITH:

HATCH GEMINI
Lamp and Ballast. Perfectly Matched.

# HATCH

**PART NO.**
**HL432BPS/UV/HE/W**
**For 4x32 WATT T8 LAMPS**

## ELECTRONIC LINEAR FLUORESCENT BALLAST

| | |
|---|---|
| **Input Voltage** | 120~277Vac ± 10% |
| **Ballast Factor** | Normal |
| **Starting Method** | Programmed Start |
| **Lamp Connection** | Parallel |

### CERTIFICATIONS

c UL us

RoHS COMPLIANT

## ELECTRICAL SPECIFICATIONS BY LAMP TYPE

| Lamp Type | No. of Lamps | Volts | Input Watts | Input Current (Amps) | Power Factor | Crest Factor | Ballast Factor | Ballast Efficacy Factor | Max THD% |
|---|---|---|---|---|---|---|---|---|---|
| F32T8 32W | 4 | 120 | 114 | 0.95 | 0.99 | <1.7 | 0.86 | 0.75 | 10 |
| | | 277 | 114 | 0.42 | 0.98 | <1.7 | 0.86 | 0.76 | 10 |
| | 3 | 120 | 95 | 0.79 | 0.99 | <1.7 | 0.92 | 0.97 | 10 |
| | | 277 | 95 | 0.35 | 0.98 | <1.7 | 0.93 | 0.99 | 10 |
| F32T8 30W | 4 | 120 | 104 | 0.87 | 0.99 | <1.7 | 0.83 | 0.80 | 10 |
| | | 277 | 104 | 0.38 | 0.98 | <1.7 | 0.84 | 0.80 | 10 |
| | 3 | 120 | 86 | 0.72 | 0.99 | <1.7 | 0.88 | 1.03 | 10 |
| | | 277 | 86 | 0.32 | 0.98 | <1.7 | 0.89 | 1.03 | 10 |
| F32T8 28W<br>Available with Gemini Lamp and Ballast Systems | 4 | 120 | 100 | 0.84 | 0.99 | <1.7 | 0.85 | 0.85 | 10 |
| | | 277 | 100 | 0.37 | 0.98 | <1.7 | 0.86 | 0.86 | 10 |
| | 3 | 120 | 83 | 0.70 | 0.99 | <1.7 | 0.92 | 1.11 | 10 |
| | | 277 | 83 | 0.31 | 0.97 | <1.7 | 0.93 | 1.12 | 12 |
| F32T8 25W<br>Available with Gemini Lamp and Ballast Systems | 4 | 120 | 93 | 0.77 | 0.99 | <1.7 | 0.89 | 0.96 | 10 |
| | | 277 | 93 | 0.34 | 0.98 | <1.7 | 0.89 | 0.96 | 10 |
| | 3 | 120 | 76 | 0.64 | 0.99 | <1.7 | 0.94 | 1.23 | 10 |
| | | 277 | 76 | 0.28 | 0.98 | <1.7 | 0.94 | 1.24 | 10 |
| F25T8 25W | 4 | 120 | 88 | 0.74 | 0.99 | <1.7 | 0.84 | 0.96 | 10 |
| | | 277 | 88 | 0.33 | 0.98 | <1.7 | 0.85 | 0.97 | 10 |
| | 3 | 120 | 74 | 0.62 | 0.98 | <1.7 | 0.90 | 1.21 | 10 |
| | | 277 | 74 | 0.28 | 0.97 | <1.7 | 0.90 | 1.21 | 12 |
| F17T8 17W | 4 | 120 | 63 | 0.52 | 0.98 | <1.7 | 0.87 | 1.39 | 10 |
| | | 277 | 63 | 0.24 | 0.97 | <1.7 | 0.89 | 1.41 | 12 |
| | 3 | 120 | 53 | 0.45 | 0.98 | <1.7 | 0.94 | 1.77 | 10 |
| | | 277 | 53 | 0.21 | 0.95 | <1.7 | 0.94 | 1.78 | 15 |
| F40T8 40W | 3 | 120 | 111 | 0.93 | 0.99 | <1.7 | 0.88 | 0.80 | 10 |
| | | 277 | 111 | 0.41 | 0.98 | <1.7 | 0.89 | 0.80 | 10 |

## PERFORMANCE:

-Sound Rated: A
-Minimum Starting Temperature: 0°F, -18°C
-Maximum Case Temperature: 167°F, 75°C
-Meets FCC Part 18 (Class A) Non-consumer limits
-5 Year Warranty
-Input Frequency 50Hz/60hz
-Ballast frequency for all listed lamps: >40kHz

## APPROVALS:

-HL Type - Hazardous Location
-Transient Protection Meets ANSI/IEEE C62.41 Cat A
-UL, cUL 935 listed, Class P, Type 1 Outdoor
-RoHS compliance

## PHYSICAL DIMENSIONS:

-Length (L): 9.50"
-Width (W): 1.65"
-Height (H): 1.18"
-Mounting (M): 8.9"

Lead Length:
-White, Black: 25"
-Blue: 33"
-Red: 33"
-Yellow: 48"
-Red/White: 33"
-Blue/White: 33"

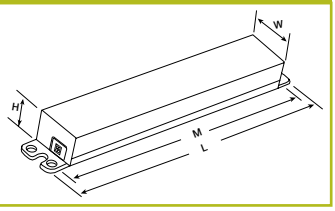


## WIRING DIAGRAM:

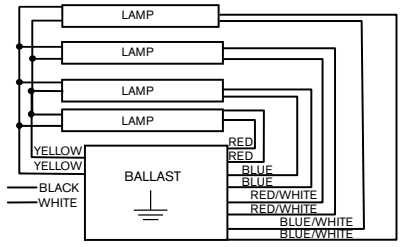


## $T_C$ POINT LOCATION:

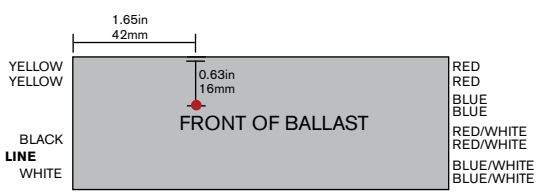


## COMPATIBLE WITH:

HATCH GEMINI
Lamp and Ballast. Perfectly Matched.

# HATCH

**PART NO.**
**HL454HO/PS/UV/W**
**For 4x54 WATT T5 LAMPS**

## ELECTRONIC LINEAR FLUORESCENT BALLAST

| | |
|---|---|
| **Input Voltage** | 120~277Vac ± 10% |
| **Ballast Factor** | Normal |
| **Starting Method** | Programmed Start |
| **Lamp Connection** | Series |

### CERTIFICATIONS

c UL us

RoHS COMPLIANT

Energy APPROVED

## ELECTRICAL SPECIFICATIONS BY LAMP TYPE

| Lamp Type | No. of Lamps | Volts | Input Watts | Input Current (Amps) | Power Factor | Crest Factor | Ballast Factor | Ballast Efficacy Factor | Max THD% |
|---|---|---|---|---|---|---|---|---|---|
| F54T5/HO<br>Available with Gemini Lamp and Ballast Systems | 4 | 120 | 229 | 1.94 | 0.99 | 1.7 | 0.96 | 0.42 | 10 |
| | | 277 | 222 | 0.83 | 0.98 | 1.7 | 0.98 | 0.44 | 10 |
| | 3 | 120 | 171 | 1.47 | 0.99 | 1.7 | 0.97 | 0.58 | 10 |
| | | 277 | 171 | 0.63 | 0.98 | 1.7 | 0.99 | 0.58 | 10 |
| | 2 | 120 | 112 | 0.96 | 0.99 | 1.7 | 0.96 | 0.86 | 10 |
| | | 277 | 112 | 0.42 | 0.98 | 1.7 | 0.98 | 0.88 | 10 |
| | 1 | 120 | 59 | 0.50 | 0.99 | 1.7 | 1.00 | 1.69 | 10 |
| | | 277 | 60 | 0.23 | 0.94 | 1.7 | 1.01 | 1.67 | 10 |
| FT55W/2G11 | 4 | 120 | 209 | 1.74 | 0.99 | 1.4 | 0.88 | 0.43 | 10 |
| | | 277 | 207 | 0.76 | 0.98 | 1.4 | 0.90 | 0.44 | 10 |
| | 3 | 120 | 155 | 1.29 | 0.99 | 1.7 | 0.92 | 0.59 | 10 |
| | | 277 | 155 | 0.57 | 0.98 | 1.4 | 0.93 | 0.60 | 10 |
| | 2 | 120 | 101 | 0.84 | 0.99 | 1.4 | 0.92 | 0.91 | 10 |
| | | 277 | 101 | 0.38 | 0.97 | 1.4 | 0.91 | 0.91 | 10 |
| | 1 | 120 | 54 | 0.46 | 0.99 | 1.4 | 0.92 | 1.70 | 15 |
| | | 277 | 56 | 0.22 | 0.92 | 1.4 | 0.93 | 1.66 | 15 |
| FT50W/2G11 | 4 | 120 | 213 | 1.79 | 0.99 | 1.7 | 0.95 | 0.44 | 10 |
| | | 277 | 213 | 0.78 | 0.98 | 1.7 | 0.95 | 0.44 | 10 |
| | 3 | 120 | 163 | 1.37 | 0.99 | 1.7 | 0.96 | 0.58 | 10 |
| | | 277 | 164 | 0.61 | 0.97 | 1.7 | 0.96 | 0.58 | 12 |
| | 2 | 120 | 109 | 0.92 | 0.99 | 1.7 | 0.97 | 0.89 | 10 |
| | | 277 | 110 | 0.42 | 0.94 | 1.7 | 0.97 | 0.88 | 15 |
| | 1 | 120 | 59 | 0.50 | 0.99 | 1.7 | 1.05 | 1.78 | 10 |
| | | 277 | 61 | 0.26 | 0.86 | 1.7 | 1.05 | 1.72 | 15 |
| FT36/39W/2G11 | 4 | 120 | 154 | 1.33 | 0.99 | 1.7 | 0.86 | 0.56 | 10 |
| | | 277 | 152 | 0.57 | 0.97 | 1.7 | 0.87 | 0.57 | 10 |
| | 3 | 120 | 114 | 0.98 | 0.99 | 1.7 | 0.88 | 0.77 | 10 |
| | | 277 | 114 | 0.43 | 0.96 | 1.7 | 0.88 | 0.77 | 10 |
| | 2 | 120 | 74 | 0.63 | 0.99 | 1.7 | 0.86 | 1.16 | 10 |
| | | 277 | 75 | 0.29 | 0.94 | 1.7 | 0.87 | 1.16 | 10 |
| | 1 | 120 | 39 | 0.33 | 0.98 | 1.7 | 0.88 | 2.26 | 15 |
| | | 277 | 41 | 0.17 | 0.85 | 1.7 | 0.88 | 2.15 | 15 |

# HATCH

**PART NO.**
**HL454HO/PS/UV/W**
**For 4x54 WATT T5 LAMPS**

## ELECTRONIC LINEAR FLUORESCENT BALLAST

| | |
|---|---|
| **Input Voltage** | 120~277Vac ± 10% |
| **Ballast Factor** | Normal |
| **Starting Method** | Programmed Start |
| **Lamp Connection** | Series |

### CERTIFICATIONS

c UL us | RoHS COMPLIANT | Energy APPROVED

## ELECTRICAL SPECIFICATIONS BY LAMP TYPE

| Lamp Type | No. of Lamps | Volts | Input Watts | Input Current (Amps) | Power Factor | Crest Factor | Ballast Factor | Ballast Efficacy Factor | Max THD% |
|---|---|---|---|---|---|---|---|---|---|
| FC12T5HO 55W | 3 | 120 | 136 | 1.13 | 0.99 | 1.5 | 0.83 | 0.61 | 10 |
| | | 277 | 136 | 0.50 | 0.97 | 1.5 | 0.84 | 0.62 | 10 |
| | 2 | 120 | 88 | 0.73 | 0.99 | 1.5 | 0.75 | 0.85 | 10 |
| | | 277 | 88 | 0.34 | 0.97 | 1.5 | 0.75 | 0.85 | 10 |
| | 1 | 120 | 46 | 0.38 | 0.99 | 1.5 | 0.77 | 1.66 | 15 |
| | | 277 | 47 | 0.19 | 0.96 | 1.5 | 0.77 | 1.65 | 15 |
| F54T5/HO/ES 49W | 4 | 120 | 214 | 1.80 | 0.99 | 1.7 | 1.00 | 0.47 | 10 |
| | | 277 | 213 | 0.78 | 0.98 | 1.7 | 1.00 | 0.47 | 10 |
| | 3 | 277 | 164 | 1.38 | 0.99 | 1.7 | 1.00 | 0.61 | 10 |
| | | 120 | 163 | 0.60 | 0.98 | 1.7 | 1.00 | 0.61 | 10 |
| | 2 | 120 | 107 | 0.90 | 0.99 | 1.7 | 1.00 | 0.93 | 10 |
| | | 277 | 106 | 0.39 | 0.98 | 1.7 | 1.00 | 0.94 | 10 |
| | 1 | 120 | 57 | 0.48 | 0.99 | 1.7 | 1.00 | 1.75 | 10 |
| | | 277 | 57 | 0.21 | 0.98 | 1.7 | 1.00 | 1.75 | 10 |

## PERFORMANCE:

-Sound Rated: A
-Minimum Starting Temperature: -20°F, -28°C
-Maximum Case Temperature: 194°F, 90°C
-Meets FCC Part 18 (Class A) Non-consumer limits
-5 Year Warranty
-Input Frequency 50Hz/60hz

## APPROVALS:

-Transient Protection Meets ANSI/IEEE C62.41 Cat A
-Lamp end-of-life protected
-UL, cUL 935 listed

## PHYSICAL DIMENSIONS:

-Length (L): 9.45”
-Width (W): 2.28”
-Height (H): 1.03”
-Mounting (M): 9.00”

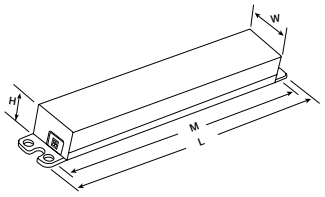


## WIRING DIAGRAM:

3 LAMPS

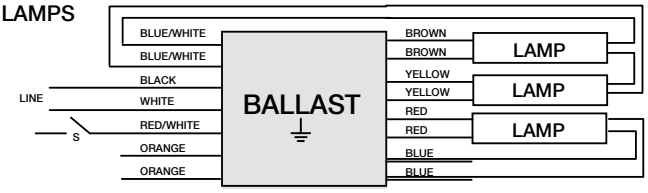


4 LAMPS

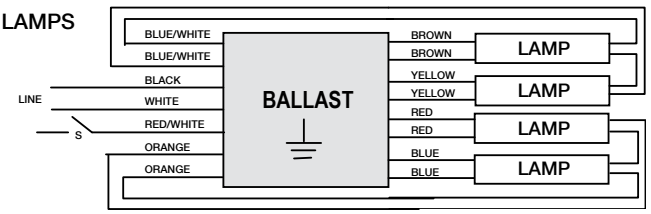


## $T_C$ POINT LOCATION:

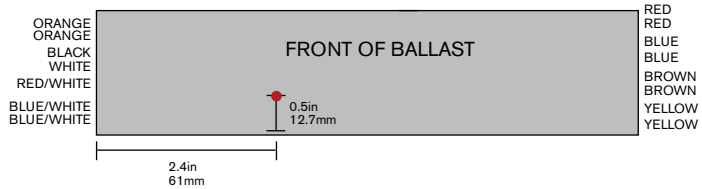


## COMPATIBLE WITH:

HATCH GEMINI
Lamp and Ballast. Perfectly Matched.

PRECISION POWER. PERFECT LIGHT.

# SMART KIT™ Ballast Replacement Kit

Hatch Compact Fluorescent Smart Kits are designed to make ballast replacement simple and easy. Smart Kits are available with 13 Watt, 18 Watt, 26 Watt & 42 Watt ballasts.

## Smart Kit Cross Reference

| Hatch Smart Kit | Universal | Advance | Osram | Robertson | GE | Keystone |
|---|---|---|---|---|---|---|
| **HC213PS/UV/K** | C213UNVSE000K/BE/BES | ICF-2S13-H1-LD | QTP 1/2x13CF/UNV | PSM213CQMV | GEC213-MVPS-SE<br>GEC213-MVPS-BES | KTEB-213-UV-TP-PSD |
| **HC218PS/UV/K** | C218UNVSE/BE/BES | ICF-2S18-H1-LD<br>REL-2Q18<br>VEL-2Q18<br>R-2Q18-4P-TP<br>V-2Q18-4P-TP | QTP 1/2x18CF/UNV | PSM218CQMV | GEC218-MVPS-SE<br>GEC218-MVPS-BES | KTEB-218-UV-TP-PSD |
| **HC226PS/UV/K** | C2642UNVSE/BE/BES<br>C132SR120BE<br>C132SR277BE<br>C266SR120BE<br>C226SR277BE | ICF-2S26-H1-LD<br>REL-1T32<br>VEL-1T32<br>REL-1T42<br>VEL-1T42 | QTP 1X26/32/42CF/UNV<br>QTP 2X26/UNV<br>QTP 1/2xCF/UNV | PSM226CQMV | GEC226-MVPS-SE<br>GEC226-MVPS-BES | KTEB-226-UV-TP-PSD |
| **HC242PS/UV/K** | C242UNV BE/SE/BES | ICF-2S42-M2-BS<br>ICF-2S42-MS-LD<br>ICF-2S42-MS-LS | | PSP242T-RMVW | C242UNVSE<br>C242UNVBES<br>GEC242-MVPS-BES<br>GEC242-MVPS-SE | KTEB-242T-UV-TP-PSD |

**Visit us at www.HatchLighting.com to view all our products**

## *Smart Kit Includes:*

- Electronic Universal Programmed Start Ballasts.
- Low profile cases to fit most fixtures.
- Simple mounting with color coded, bottom and side push-in connectors.
- Integrated End-Of-Lamp life protection.
- THD under 10% in most applications.
- Maximum case temperature of 90° C wich is beneficial when used in recessed fixture applications.
- Wires, wire removal tool & adapter plate with studs for maximum flexibility.
- Mounting plate uses simple crimp tabs to mount to ballast. There are no small screws or mounting hardware to lose.
- Ability to use a single ballast for one or two lamp applications

## ABOUT HATCH

Since 1985, Hatch has been the recognized market leader in the design and manufacture of premium power lighting products and solutions. Hatch offers a complete line of electronic and magnetic ballasts and transformers for virtually all lighting applications and is one of the largest independent, full-line power supply manufacturers in the world.

REV: 290512

Part No.
ESB-0216-12-UV

# ELECTRONIC FLUORESCENT SIGN BALLAST

| | | | |
|---|---|---|---|
| **Ballast Type** | Electronic | **Starting Method** | Instant Start |
| **Lamp Connection** | Parallel | **Input Voltage** | 120 ~ 277Vac ± 10% |
| **Input Frequency** | 50Hz / 60Hz | | |

## PERFORMANCE

- Sound Rated: A
- Minimum Starting Temperature: -20°F, -29°C
- Maximum Case Tempereature: 194°F, 90°C
- Meets FCC Part 18 (Class A) Non Consumer Limits
- Electronic Sign Ballast for 2 and 1 T12HO lamps up to 8 ft long or any combination thereof from 2-16 ft
- Electronic Sign Ballast for 2 and 1 T8HO lamps up to 6 ft long or any combination thereof from 4-12 ft

## APPROVALS

- HL Type - Hazardous Location
- UL, cUL 935 Listed

## HOT SPOT LOCATION

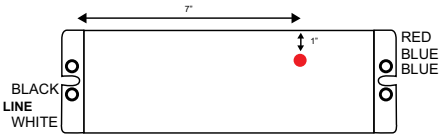


## WIRE LENGTHS

(1) Black 24"
(1) White 24"
(1) Red 96"
(2) Blue 96"

**3 Year Warranty From Date of Manufacture**

## Electrical Specifications

| Lamp Type | No. of Lamps | Lamp Footage | | Volts | Input Watts | Input Current (Amps) | Power Factor | Crest Factor | Max. THD % |
|---|---|---|---|---|---|---|---|---|---|
| | | Min | Max | | | | | | |
| **F96T12/HO** | 2, 1 | 2 | 16 | 120 | 131 | 1.20 | >0.90 | <1.7 | 10 |
| **F96T12/HO** | 2, 1 | 2 | 16 | 277 | 132 | 0.50 | >0.90 | <1.7 | 10 |
| **F72T8/HO** | 2, 1 | 4 | 12 | 120 | 122 | 1.10 | >0.90 | <1.7 | 10 |
| **F72T8/HO** | 2, 1 | 4 | 12 | 277 | 121 | 0.45 | >0.90 | <1.7 | 10 |

## Physical Dimensions

Length (L): 9.50”
Width (W): 2.36”
Height (H): 1.70”
Mounting (M): 8.90”

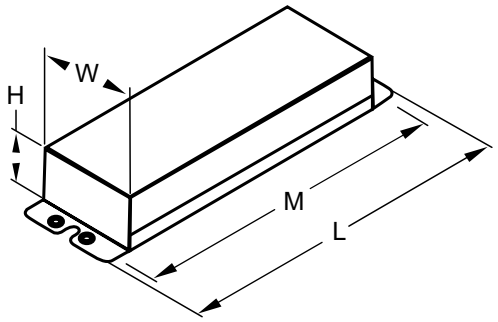


## Wiring Diagram

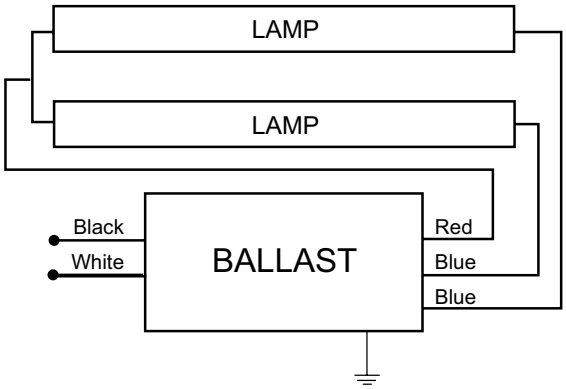


Two Lamps Application
(Cap off 1 Blue Lead for 1 lamp application)

Part No.
ESB-0432-14-UV

# ELECTRONIC FLUORESCENT SIGN BALLAST

| | | | |
|---|---|---|---|
| **Ballast Type** | Electronic | **Starting Method** | Instant Start |
| **Lamp Connection** | Parallel | **Input Voltage** | 120 ~ 277Vac ± 10% |
| **Input Frequency** | 50Hz / 60Hz | | |

## PERFORMANCE

- Sound Rated: A
- Minimum Starting Temperature: -20°F, -29°C
- Maximum Case Tempereature: 194°F, 90°C
- Meets FCC Part 18 (Class A) Non Consumer Limits
- Electronic Sign Ballast for 4, 3, 2 and 1 T12HO lamps up to 8 ft long or any combination thereof from 4-32 ft
- Electronic Sign Ballast for 4, 3, 2 and 1 T8HO lamps up to 6 ft long or any combination thereof from 4-24 ft

## APPROVALS

- HL Type - Hazardous Location
- UL, cUL 935 Listed

## HOT SPOT LOCATION

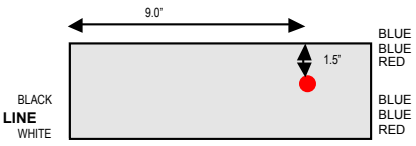


## WIRE LENGTHS

(1) Black 24”
(1) White 24”
(1) Yellow 120”
(1) Yellow/Black 120”
(2) Red 120”
(2) Blue 120”

**3 Year Warranty From Date of Manufacture**

## Electrical Specifications

| Lamp Type | No. of Lamps | Lamp Footage | | Volts | Input Watts | Input Current (Amps) | Power Factor | Crest Factor | Max. THD % |
|---|---|---|---|---|---|---|---|---|---|
| | | Min | Max | | | | | | |
| **F96T12/HO** | 4, 3, 2, 1 | 4 | 32 | 120 | 267 | 2.40 | >0.90 | <1.7 | 10 |
| **F96T12/HO** | 4, 3, 2, 1 | 4 | 32 | 277 | 267 | 1.00 | >0.90 | <1.7 | 10 |
| **F72T8/HO** | 4, 3, 2, 1 | 4 | 24 | 120 | 244 | 2.20 | >0.90 | <1.7 | 10 |
| **F72T8/HO** | 4, 3, 2, 1 | 4 | 24 | 277 | 242 | 0.90 | >0.90 | <1.7 | 10 |

## Physical Dimensions

Length (L): 11.65”
Width (W): 3.15”
Height (H): 1.85”
Mounting (M): 11.2”

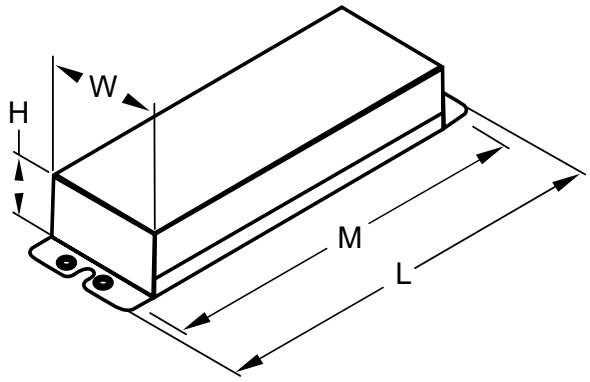


## Wiring Diagram

Shown on Pg. 2

## Wiring Diagram Continued

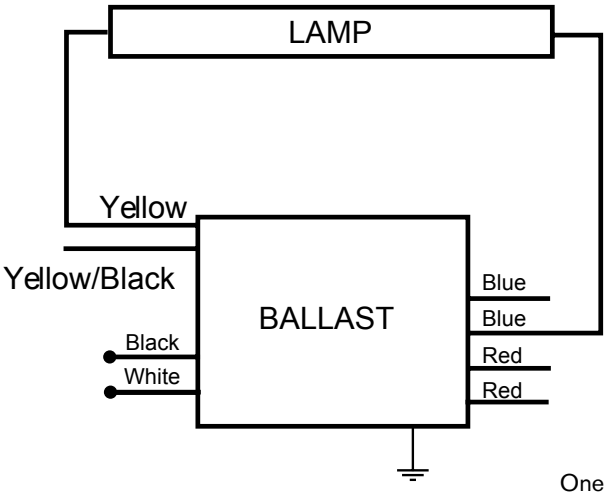


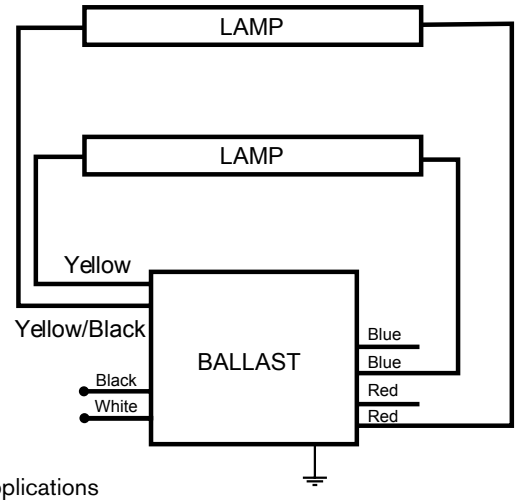


One and Two Lamp Applications
(Individually cap red and blue leads)

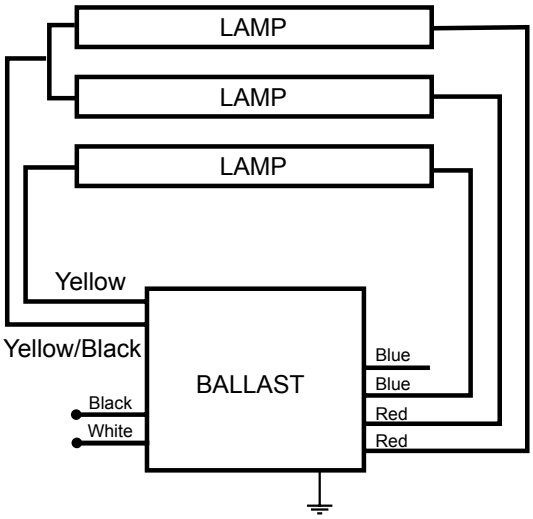


Three Lamps Application
(Individually cap red and blue leads)

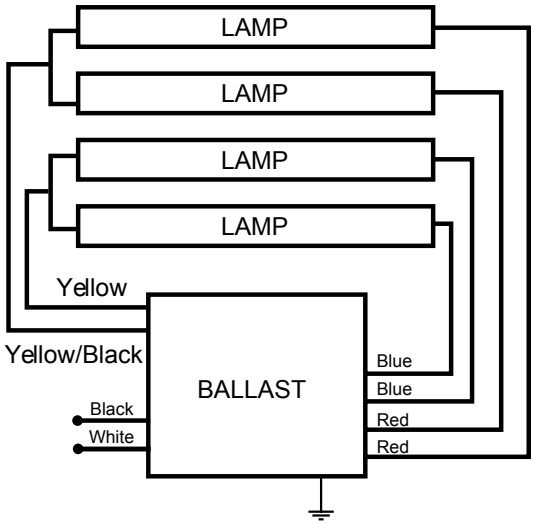


Four Lamps Application

Part No.
ESB-0848-46-UV

# ELECTRONIC FLUORESCENT SIGN BALLAST

| | | | |
|---|---|---|---|
| **Ballast Type** | Electronic | **Starting Method** | Instant Start |
| **Lamp Connection** | Parallel | **Input Voltage** | 120 ~ 277Vac ± 10% |
| **Input Frequency** | 50Hz / 60Hz | | |

## PERFORMANCE

- Sound Rated: A
- Minimum Starting Temperature: -20°F, -29°C
- Maximum Case Tempereature: 194°F, 90°C
- Meets FCC Part 18 (Class A) Non Consumer Limits
- Electronic Sign Ballast for 4, 5 and 6 T12HO lamps up to 8 ft long or any combination thereof from 8-48 ft
- Electronic Sign Ballast for 4, 5 and 6 T8HO lamps up to 6 ft long or any combination thereof from 16-36 ft

## APPROVALS

- HL Type - Hazardous Location
- UL, cUL 935 Listed

## HOT SPOT LOCATION

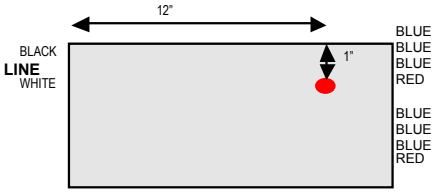


## WIRE LENGTHS

(1) Black 24”
(1) White 24”
(1) Yellow 144”
(1) Yellow/Black 144”
(3) Red 144”
(3) Blue 144”

**3 Year Warranty From Date of Manufacture**

## Electrical Specifications

| Lamp Type | No. of Lamps | Lamp Footage | | Volts | Input Watts | Input Current (Amps) | Power Factor | Crest Factor | Max. THD % |
|---|---|---|---|---|---|---|---|---|---|
| | | Min | Max | | | | | | |
| **F96T12/HO** | 6, 5, 4 | 8 | 48 | 120 | 410 | 3.50 | >0.98 | <1.7 | 10 |
| **F96T12/HO** | 6, 5, 4 | 8 | 48 | 277 | 405 | 1.50 | >0.97 | <1.7 | 10 |
| **F72T8/HO** | 6, 5, 4 | 16 | 36 | 120 | 370 | 3.20 | >0.98 | <1.7 | 10 |
| **F72T8/HO** | 6, 5, 4 | 16 | 36 | 277 | 365 | 1.36 | >0.96 | <1.7 | 10 |

## Physical Dimensions

Length (L): 14.45”
Width (W): 3.23”
Height (H): 2.20”
Mounting (M): 13.75”

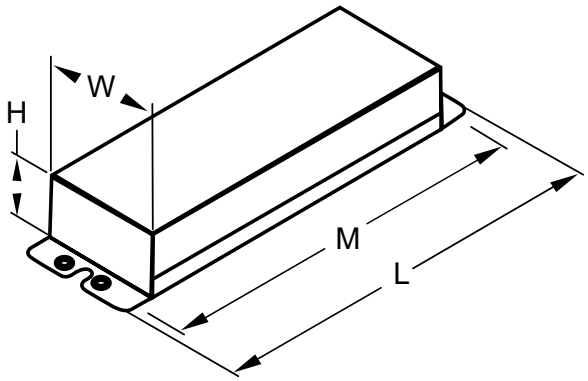


## Wiring Diagram

Shown on Pg. 2

## Wiring Diagram Continued

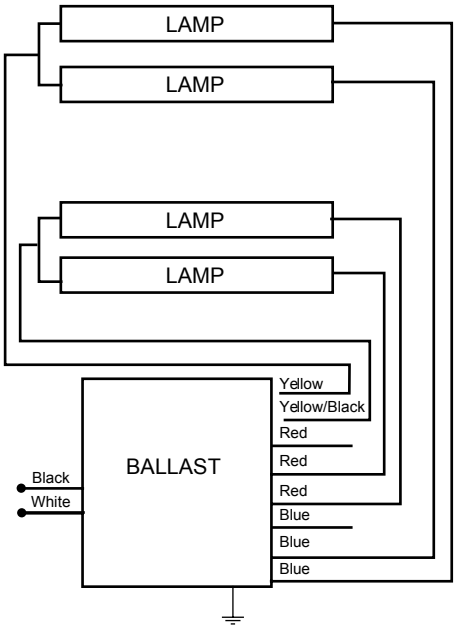


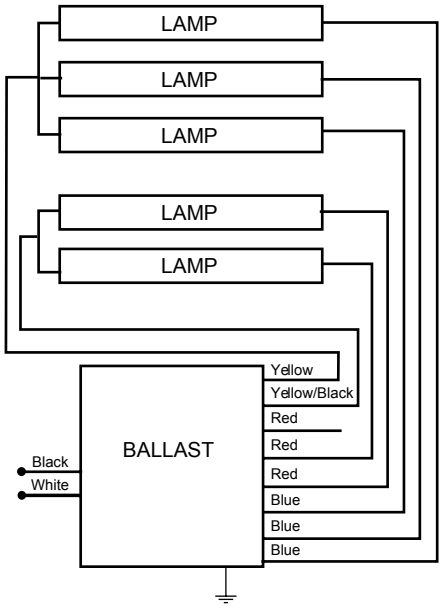


Four and Five Lamp Applications
(Individually cap blue leads)

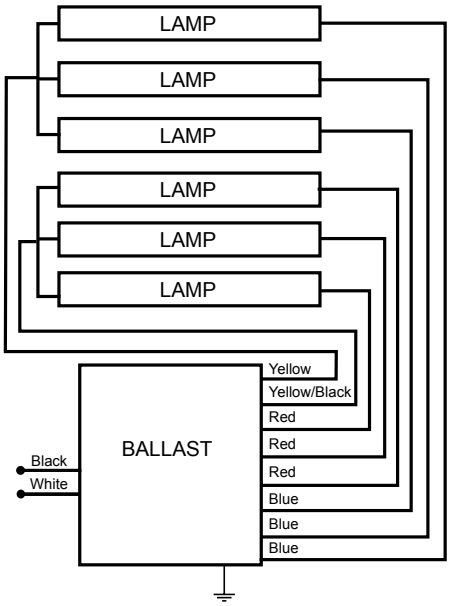


Six Lamp Application

Part No.
ESB-1040-14-UV

# ELECTRONIC FLUORESCENT SIGN BALLAST

## PERFORMANCE

- Sound Rated: A
- Minimum Starting Temperature: -20°F, -29°C
- Maximum Case Tempereature: 194°F, 90°C
- Meets FCC Part 18 (Class A) Non Consumer Limits

## APPROVALS

- HL Type - Hazardous Location
- UL, cUL 935 Listed

## HOT SPOT LOCATION

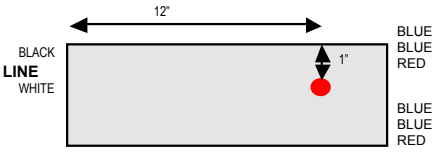


## WIRE LENGTHS

(1) Black 24”
(1) White 24”
(1) Yellow 132”
(1) Yellow/Black 132”
(2) Red 132”
(2) Blue 132”

**3 Year Warranty From Date of Manufacture**

| | | | |
|---|---|---|---|
| **Ballast Type** | Electronic | **Starting Method** | Instant Start |
| **Lamp Connection** | Parallel | **Input Voltage** | 120 ~ 277Vac ± 10% |
| **Input Frequency** | 50Hz / 60Hz | | |

## Electrical Specifications

| Lamp Type | No. of Lamps | Lamp Footage | | Volts | Input Watts | Input Current (Amps) | Power Factor | Crest Factor | Max. THD % |
|---|---|---|---|---|---|---|---|---|---|
| | | Min | Max | | | | | | |
| **F120T12HO** | 4, 3, 2, 1 | 10 | 40 | 120 | 352 | 3.00 | >0.98 | <1.7 | 10 |
| **F120T12HO** | 4, 3, 2, 1 | 10 | 40 | 277 | 349 | 1.30 | >0.95 | <1.7 | 10 |
| **F96T8HO** | 4, 3, 2, 1 | 8 | 32 | 120 | 330 | 2.80 | >0.98 | <1.7 | 10 |
| **F96T8HO** | 4, 3, 2, 1 | 8 | 32 | 277 | 325 | 1.25 | >0.95 | <1.7 | 10 |

## Physical Dimensions

Length (L): 14.45”
Width (W): 3.23”
Height (H): 2.20”
Mounting (M): 13.75”

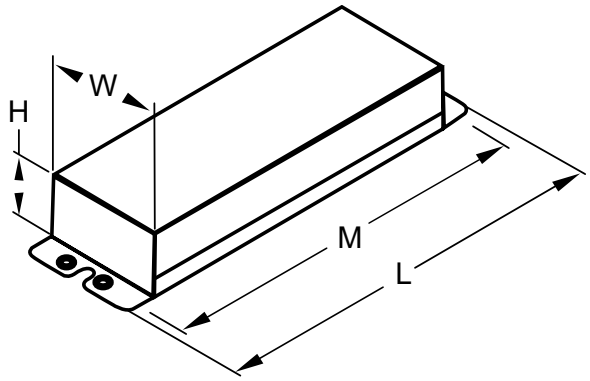


## Wiring Diagram

Shown on Pg. 2

## Wiring Diagram Continued

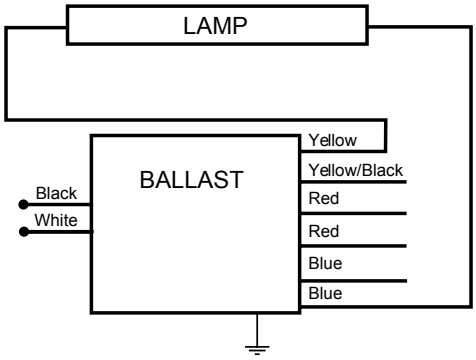


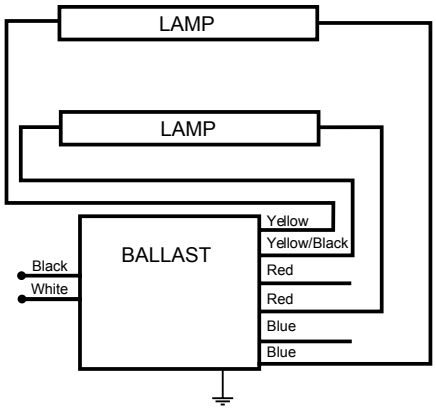


One and Two Lamp Applications
(Individually cap red and blue leads)

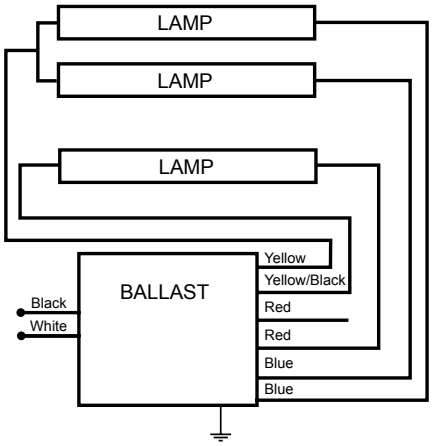


Three Lamp Application
(Individually cap red lead)

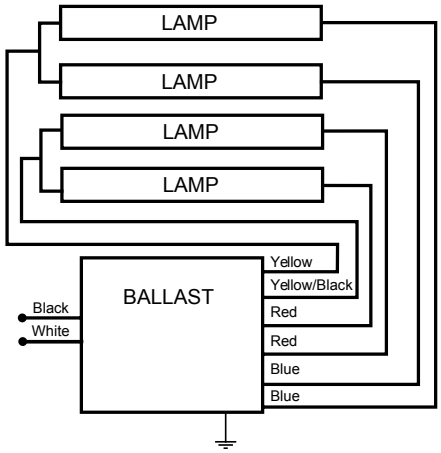


Four Lamp Application

**Part No.**
**GC50-MLT-HXAA**
MAGNETIC

# MAGNETIC HID BALLAST

| | | | |
|---|---|---|---|
| **Ballast Type** | Magnetic Pulse Start | **Circuit Type** | HX-HPF |
| **Lamp** | 50W Metal Halide M110/M148 | **Frequency** | 60Hz |

## PHYSICAL DIMENSIONS

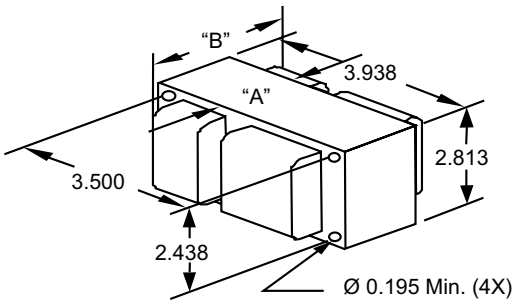


## WIRING DIAGRAM

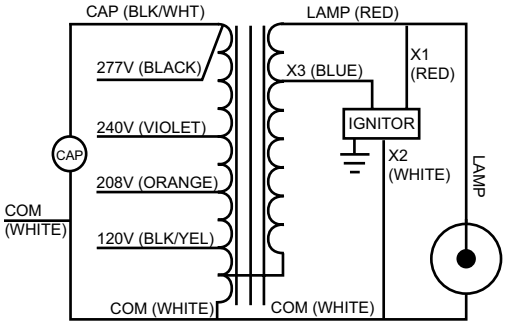


## CAPACITOR

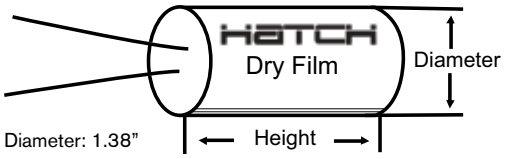


Diameter: 1.38"

Height: 3.17"

## IGNITOR

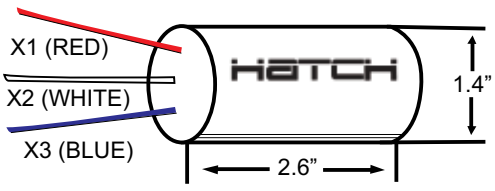


Pulse Height (kV): 3.0 ~ 4.0

Pulse Width (≥ µs): 1.3 @ 2.7kV

RoHS COMPLIANT

c UL us

**2 Year Warranty From Date of Manufacture**

## ELECTRICAL SPECIFICATIONS

| | | Quad Tap | | | | |
|---|---|---|---|---|---|---|
| **Input Voltage (V)** | | **120** | **208** | **240** | **277** | |
| Line Current (A) | Operating | 0.6 | 0.4 | 0.3 | 0.3 | |
| | Open Circuit | 1.2 | 0.8 | 0.6 | 0.5 | |
| | Starting | 0.6 | 0.4 | 0.3 | 0.3 | |
| Recommended Fuse | | 5 | 3 | 3 | 2 | |
| Input Voltage At Lamp Dropout | | 85 | 150 | 180 | 200 | |
| UL Class H 180°C Temp. Code | | A | A | A | A | |
| UL Class N 200°C Temp. Code | | A | A | A | A | |
| Nom. Open Circuit Voltage | | 258 | | | | |
| Input Power (W) | | 70 | | | | |
| Power Factor(≥ %) | | 90 | | | | |
| Regulation (± %) | Line Volts | 5 | | | | |
| | Lamp Watts | 10 | | | | |
| Min. Starting Temp | | -20°F / -30°C | | | | |
| Ballast Dimensions (inches) | A | 1.04 | | | | |
| | B | 2.48 | | | | |
| Ballast Net Weight (lbs) | | 3.1 | | | | |
| Lead Length (inches) | | 12 | | | | |
| Capacitor | Capacitance (µF) | 6 | | | | |
| | Min VAC Rating (V) | 280 | | | | |
| Requires Ignitor Model | | GMHR1 | | | | |
| Coil Material (Pri./ Sec.) | | Al / Al | | | | |

## 60 HZ. TEST PROCEDURES

| | | | | | | | |
|---|---|---|---|---|---|---|---|
| Short Circuit Current (A) | Secondary | Min | 0.7 | | | | |
| | | Max | 1.1 | | | | |
| | Input | Min | 0.3 | 0.2 | 0.2 | 0.1 | |
| | | Max | 0.9 | 0.6 | 0.5 | 0.4 | |
| Open Circuit Voltage (V) | | Min | 235 | | | | |
| | | Max | 290 | | | | |
| High Potential Test (V) | | 1 Minute | 1600 | | | | |
| | | 1 Second | 1900 | | | | |

## REFERENCE LAMP DATA

| | Test Range | ANSI Standard |
|---|---|---|
| Starting Current (A) | | 0.7 ~ 1.1 |
| CCF | 1.5 | ≤ 1.8 |
| OCV (V) | 235 ~ 290 | |
| Off Time (Sec.) | | |
| Peak Current (A) | | |
| Overshoot (V) | | |
| VSS (V) | | |

## OPTIONAL FEATURES

(ADD SUFFIX FOR OPTIONS)

| | |
|---|---|
| -WB | With welded bracket |
| -I | With ignitor |
| -DC | With dry film capacitor |
| -OC | With oil filled capacitor |
| -K | With distributor replacement kit (includes bracket, capacitor and ignitor as necessary) |

HATCH

**PART NO.**
# GC70-48T-HXCC

MAGNETIC

# MAGNETIC HID BALLAST

| | | | |
|---|---|---|---|
| **Ballast Type** | Magnetic Pulse Start | **Circuit Type** | HX-HPF |
| **Lamp** | 70W Metal Halide M98/M143 | **Frequency** | 60Hz |

## PHYSICAL DIMENSIONS

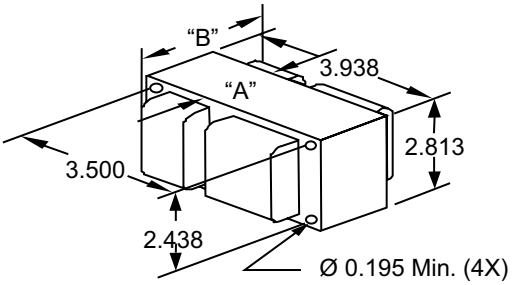


## WIRING DIAGRAM

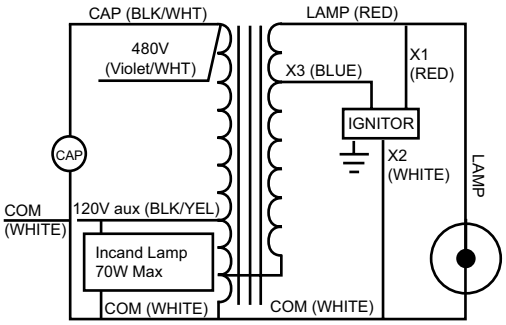


## CAPACITOR

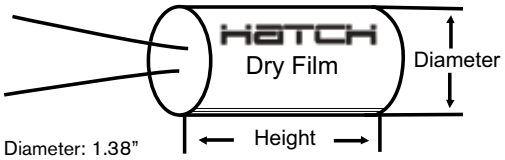


Diameter: 1.38"

Height: 3.17"

## IGNITOR

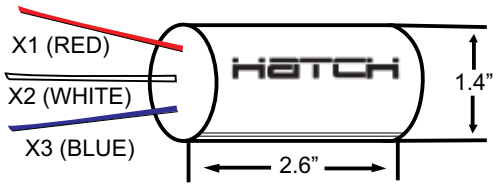


Pulse Height (kV): 3.0 ~ 4.0

Pulse Width (≥ µs): 1.3 @ 2.7kV

RoHS COMPLIANT

c UL us

**2 YEAR WARRANTY FROM DATE OF MANUFACTURE**

## ELECTRICAL SPECIFICATIONS

| | | Dual Tap | | | | |
|---|---|---|---|---|---|---|
| **Input Voltage (V)** | | | | | | **480** |
| Line Current (A) | Operating | | | | | 0.3 |
| | Open Circuit | | | | | 0.4 |
| | Starting | | | | | 0.5 |
| Recommended Fuse | | | | | | 2 |
| Input Voltage At Lamp Dropout | | | | | | 160 |
| UL Class H 180°C Temp. Code | | | | | | C |

| | | |
|---|---|---|
| Nom. Open Circuit Voltage | | 260 |
| Input Power (W) | | 88 |
| Power Factor(≥ %) | | 90 |
| Regulation (± %) | Line Volts | 5 |
| | Lamp Watts | 10 |
| Min. Starting Temp | | -20°F / -30°C |
| Ballast Dimensions (inches) | A | 1.46 |
| | B | 2.8 |
| Ballast Net Weight (lbs) | | 5.0 |
| Lead Length (inches) | | 12 |
| Capacitor | Capacitance (µF) | 8 |
| | Min VAC Rating (V) | 280 |
| Requires Ignitor Model | | GMHR1 |
| Coil Material (Pri./ Sec.) | | Cu / Cu |

## 60 HZ. TEST PROCEDURES

| | | | | | | | |
|---|---|---|---|---|---|---|---|
| Short Circuit Current (A) | Secondary | Min | 0.9 | | | | |
| | | Max | 1.5 | | | | |
| | Input | Min | | | | | 0.2 |
| | | Max | | | | | 0.6 |
| Open Circuit Voltage (V) | | Min | 235 | | | | |
| | | Max | 290 | | | | |
| High Potential Test (V) | | 1 Minute | 1600 | | | | |
| | | 1 Second | 1900 | | | | |

## REFERENCE LAMP DATA

| | Test Range | ANSI Standard |
|---|---|---|
| Starting Current (A) | | 0.9 ~ 1.5 |
| CCF | 1.5 | ≤ 1.8 |
| OCV (V) | 235 ~ 290 | |
| Off Time (Sec.) | | |
| Peak Current (A) | | |
| Overshoot (V) | | |
| VSS (V) | | |

## OPTIONAL FEATURES

(ADD SUFFIX FOR OPTIONS)

| | |
|---|---|
| -WB | With welded bracket |
| -I | With ignitor |
| -DC | With dry film capacitor |
| -OC | With oil filled capacitor |
| -K | With distributor replacement kit (includes bracket, capacitor and ignitor as necessary) |

**Part No.**

# GC70-MLT-HXCA

MAGNETIC

# MAGNETIC HID BALLAST

| | | | |
|---|---|---|---|
| **Ballast Type** | Magnetic Pulse Start | **Circuit Type** | HX-HPF |
| **Lamp** | 70W Metal Halide M98/M143 | **Frequency** | 60Hz |

## PHYSICAL DIMENSIONS

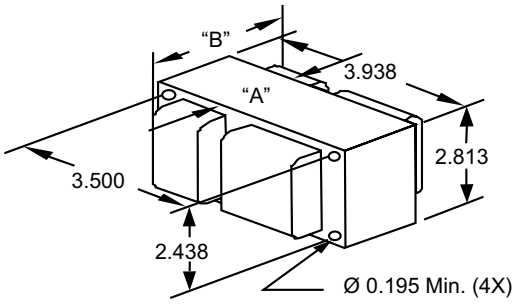


## WIRING DIAGRAM

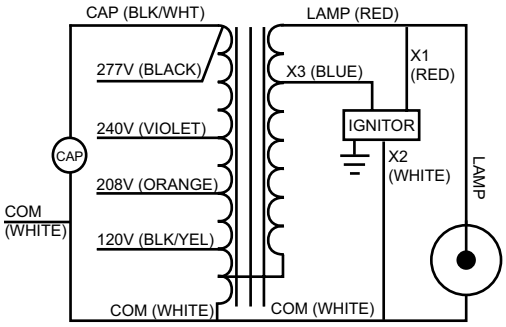


## CAPACITOR

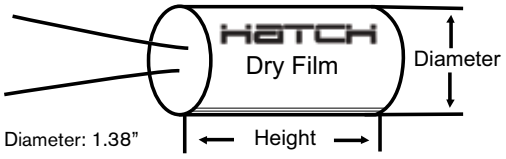


Diameter: 1.38"

Height: 3.17"

## IGNITOR

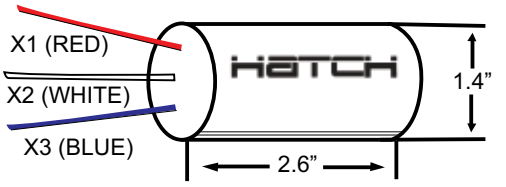


Pulse Height (kV): 3.0 ~ 4.0

Pulse Width (≥ µs): 1.3 @ 2.7kV

RoHS COMPLIANT

c UL us

**2 Year Warranty From Date of Manufacture**

## ELECTRICAL SPECIFICATIONS

| | | Quad Tap | | | | |
|---|---|---|---|---|---|---|
| **Input Voltage (V)** | | **120** | **208** | **240** | **277** | |
| Line Current (A) | Operating | 0.8 | 0.5 | 0.4 | 0.3 | |
| | Open Circuit | 1.6 | 0.9 | 0.8 | 0.7 | |
| | Starting | 0.7 | 0.4 | 0.4 | 0.3 | |
| Recommended Fuse | | 6 | 3 | 3 | 2 | |
| Input Voltage At Lamp Dropout | | 80 | 130 | 150 | 175 | |
| UL Class H 180°C Temp. Code | | A | A | A | A | |
| UL Class N 200°C Temp. Code | | A | A | A | A | |
| Nom. Open Circuit Voltage | | 252 | | | | |
| Input Power (W) | | 85 | | | | |
| Power Factor(≥ %) | | 90 | | | | |
| Regulation (± %) | Line Volts | 5 | | | | |
| | Lamp Watts | 10 | | | | |
| Min. Starting Temp | | -20°F / -30°C | | | | |
| Ballast Dimensions (inches) | A | 1.46 | | | | |
| | B | 2.9 | | | | |
| Ballast Net Weight (lbs) | | 4.5 | | | | |
| Lead Length (inches) | | 12 | | | | |
| Capacitor | Capacitance (µF) | 8 | | | | |
| | Min VAC Rating (V) | 280 | | | | |
| Requires Ignitor Model | | GMHR1 | | | | |
| Coil Material (Pri./ Sec.) | | Cu / Al | | | | |

## 60 HZ. TEST PROCEDURES

| | | | | | | | |
|---|---|---|---|---|---|---|---|
| Short Circuit Current (A) | Secondary | Min | 0.9 | | | | |
| | | Max | 1.5 | | | | |
| | Input | Min | 0.4 | 0.3 | 0.2 | 0.2 | |
| | | Max | 1.3 | 0.9 | 0.7 | 0.7 | |
| Open Circuit Voltage (V) | | Min | 235 | | | | |
| | | Max | 280 | | | | |
| High Potential Test (V) | | 1 Minute | 1600 | | | | |
| | | 1 Second | 1900 | | | | |

## REFERENCE LAMP DATA

| | Test Range | ANSI Standard |
|---|---|---|
| Starting Current (A) | | 0.9 ~ 1.5 |
| CCF | 1.5 | ≤ 1.8 |
| OCV (V) | 235 ~ 280 | |
| Off Time (Sec.) | | |
| Peak Current (A) | | |
| Overshoot (V) | | |
| VSS (V) | | |

## OPTIONAL FEATURES

(ADD SUFFIX FOR OPTIONS)

| | |
|---|---|
| -WB | With welded bracket |
| -I | With ignitor |
| -DC | With dry film capacitor |
| -OC | With oil filled capacitor |
| -K | With distributor replacement kit (includes bracket, capacitor and ignitor as necessary) |

**Part No.**

# GC100-48T-HXCC

MAGNETIC

# MAGNETIC HID BALLAST

| | | | |
|---|---|---|---|
| **Ballast Type** | Magnetic Pulse Start | **Circuit Type** | HX-HPF |
| **Lamp** | 100W Metal Halide M90/M140 | **Frequency** | 60Hz |

## PHYSICAL DIMENSIONS

3" x 4" Core

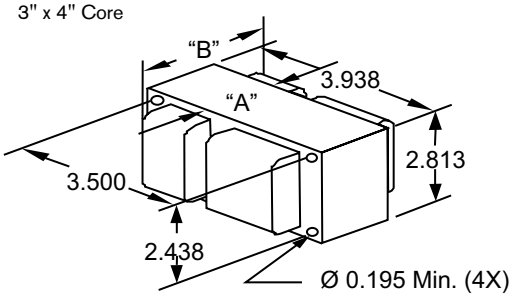


## WIRING DIAGRAM

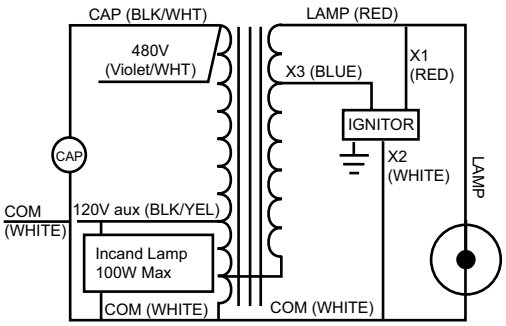


## CAPACITOR

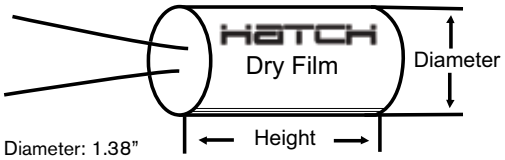


Diameter: 1.38"

Height: 3.17"

## IGNITOR

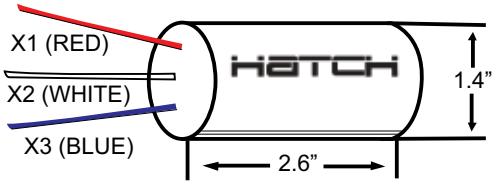


Pulse Height (kV): 3.0 ~ 4.0

Pulse Width (≥ µs): 1.3 @ 2.7kV

RoHS COMPLIANT

c UL us

**2 Year Warranty From Date of Manufacture**

## ELECTRICAL SPECIFICATIONS

| | | Dual Tap | | | | |
|---|---|---|---|---|---|---|
| **Input Voltage (V)** | | | | | | **480** |
| Line Current (A) | Operating | | | | | 0.3 |
| | Open Circuit | | | | | 0.6 |
| | Starting | | | | | 0.4 |
| Recommended Fuse | | | | | | 2 |
| Input Voltage At Lamp Dropout | | | | | | 160 |
| UL Class H 180°C Temp. Code | | | | | | C |
| UL Class N 200°C Temp. Code | | | | | | A |
| Nom. Open Circuit Voltage | | 281 | | | | |
| Input Power (W) | | 120 | | | | |
| Efficiency (%) | | 80 | | | | |
| Power Factor(≥%) | | 90 | | | | |
| Regulation (± %) | Line Volts | 5 | | | | |
| | Lamp Watts | 10 | | | | |
| Min. Starting Temp | | -20°F / -30°C | | | | |
| Ballast Dimensions (inches) | A | 1.61 | | | | |
| | B | 2.8 | | | | |
| Ballast Net Weight (lbs) | | 5.0 | | | | |
| Lead Length (inches) | | 12 | | | | |
| Capacitor | Capacitance (µF) | 12 | | | | |
| | Min VAC Rating (V) | 280 | | | | |
| Requires Ignitor Model | | GMHR1 | | | | |
| Coil Material (Pri./ Sec.) | | Cu / Cu | | | | |

## 60 HZ. TEST PROCEDURES

| | | | | | | | |
|---|---|---|---|---|---|---|---|
| Short Circuit Current (A) | Secondary | Min | 1.1 | | | | |
| | | Max | 1.5 | | | | |
| | Input | Min | | | | | 0.2 |
| | | Max | | | | | 0.5 |
| Open Circuit Voltage (V) | | Min | 235 | | | | |
| | | Max | 310 | | | | |
| High Potential Test (V) | | 1 Minute | 1600 | | | | |
| | | 1 Second | 1900 | | | | |

## REFERENCE LAMP DATA

| | Test Range | ANSI Standard |
|---|---|---|
| Starting Current (A) | | 1.1 ~ 1.5 |
| CCF | 1.6 | ≤1.8 |
| OCV (V) | 235 ~ 310 | |
| Off Time (Sec.) | | |
| Peak Current (A) | | |
| Overshoot (V) | | |
| VSS (V) | | |

## OPTIONAL FEATURES

(ADD SUFFIX FOR OPTIONS)

| | |
|---|---|
| -WB | With welded bracket |
| -I | With ignitor |
| -DC | With dry film capacitor |
| -OC | With oil filled capacitor |
| -K | With distributor replacement kit (includes bracket, capacitor and ignitor as necessary) |

**Part No.**
**GC100-MLT-HXCA**
MAGNETIC

# MAGNETIC HID BALLAST

| | | | |
|---|---|---|---|
| **Ballast Type** | Magnetic Pulse Start | **Circuit Type** | HX-HPF |
| **Lamp** | 100W Metal Halide M90/M140 | **Frequency** | 60Hz |

## PHYSICAL DIMENSIONS

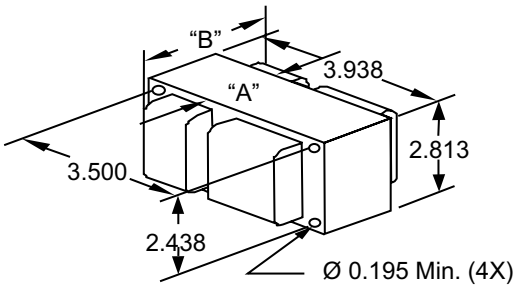


## WIRING DIAGRAM

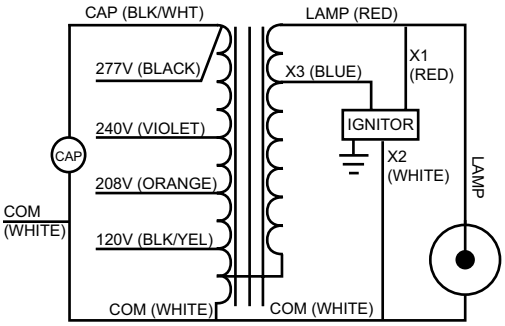


## CAPACITOR

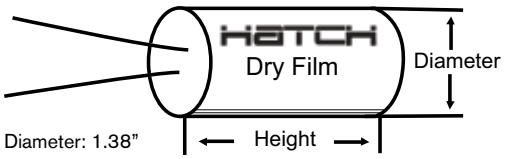


Diameter: 1.38"
Height: 3.17"

## IGNITOR

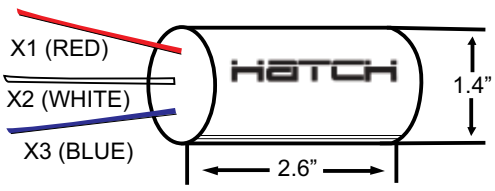


Pulse Height (kV): 3.0 ~ 4.0
Pulse Width (≥ µs): 1.3 @ 2.7kV

RoHS COMPLIANT
c UL us

**2 Year Warranty From Date of Manufacture**

## ELECTRICAL SPECIFICATIONS

| | | | Quad Tap | | | | |
|---|---|---|---|---|---|---|---|
| **Input Voltage (V)** | | | **120** | **208** | **240** | **277** | |
| Line Current (A) | Operating | | 1.1 | 0.6 | 0.5 | 0.4 | |
| | Open Circuit | | 2.4 | 1.4 | 1.2 | 1.1 | |
| | Starting | | 1.4 | 0.7 | 0.6 | 0.5 | |
| Recommended Fuse | | | 8 | 6 | 4 | 4 | |
| Input Voltage At Lamp Dropout | | | 80 | 130 | 150 | 175 | |
| UL Class H 180°C Temp. Code | | | B | A | A | A | |
| UL Class N 200°C Temp. Code | | | A | A | A | A | |
| Nom. Open Circuit Voltage | | | 276 | | | | |
| Input Power (W) | | | 120 | | | | |
| Power Factor(≥ %) | | | 90 | | | | |
| Regulation (± %) | Line Volts | | 5 | | | | |
| | Lamp Watts | | 10 | | | | |
| Min. Starting Temp | | | -20°F / -30°C | | | | |
| Ballast Dimensions (inches) | | A | 1.57 | | | | |
| | | B | 2.95 | | | | |
| Ballast Net Weight (lbs) | | | 4.8 | | | | |
| Lead Length (inches) | | | 12 | | | | |
| Capacitor | Capacitance (µF) | | 12 | | | | |
| | Min VAC Rating (V) | | 280 | | | | |
| Requires Ignitor Model | | | GMHR1 | | | | |
| Coil Material (Pri./ Sec.) | | | Cu / Al | | | | |

## 60 HZ. TEST PROCEDURES

| | | | | | | | |
|---|---|---|---|---|---|---|---|
| Short Circuit Current (A) | Secondary | Min | 1.1 | | | | |
| | | Max | 1.5 | | | | |
| | Input | Min | 0.6 | 0.3 | 0.3 | 0.3 | |
| | | Max | 1.9 | 1.0 | 0.9 | 0.8 | |
| Open Circuit Voltage (V) | | Min | 235 | | | | |
| | | Max | 310 | | | | |
| High Potential Test (V) | | 1 Minute | 1600 | | | | |
| | | 1 Second | 1900 | | | | |

## REFERENCE LAMP DATA

| | Test Range | ANSI Standard |
|---|---|---|
| Starting Current (A) | | 1.1 ~ 1.5 |
| CCF | 1.6 | ≤ 1.8 |
| OCV (V) | 235 ~ 310 | |
| | | |
| | | |
| | | |
| | | |

## OPTIONAL FEATURES

(ADD SUFFIX FOR OPTIONS)

| | |
|---|---|
| -WB | With welded bracket |
| -I | With ignitor |
| -DC | With dry film capacitor |
| -OC | With oil filled capacitor |
| -K | With distributor replacement kit (includes bracket, capacitor and ignitor as necessary) |

HATCH

**PART NO.**
**GC150-48T-HXCC**
MAGNETIC

# MAGNETIC HID BALLAST

| | | | |
|---|---|---|---|
| **Ballast Type** | Magnetic Pulse Start | **Circuit Type** | HX-HPF |
| **Lamp** | 150W Metal Halide M102/M142 | **Frequency** | 60Hz |

## PHYSICAL DIMENSIONS

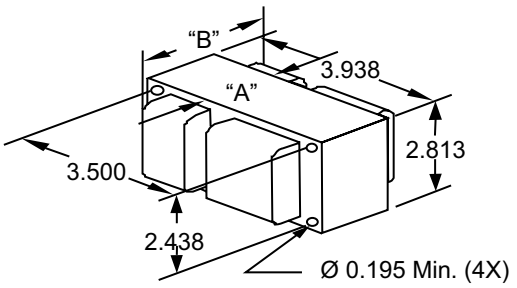


## WIRING DIAGRAM

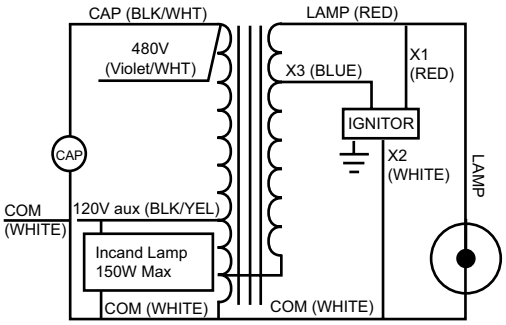


## CAPACITOR

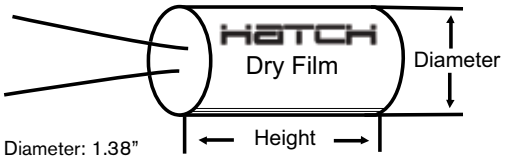


Diameter: 1.38"

Height: 3.17"

## IGNITOR

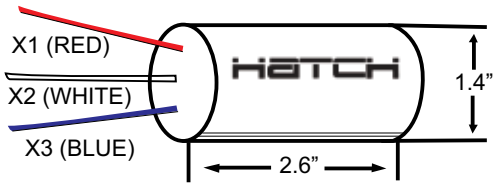


Pulse Height (kV): 3.0 ~ 4.0

Pulse Width (≥ µs): 1.3 @ 2.7kV

RoHS COMPLIANT

c UL us

**2 YEAR WARRANTY FROM DATE OF MANUFACTURE**

## ELECTRICAL SPECIFICATIONS

| | | Dual Tap | | | | |
|---|---|---|---|---|---|---|
| **Input Voltage (V)** | | | | | | **480** |
| Line Current (A) | Operating | | | | | 0.4 |
| | Open Circuit | | | | | 0.9 |
| | Starting | | | | | 0.6 |
| Recommended Fuse | | | | | | 2 |
| Input Voltage At Lamp Dropout | | | | | | 280 |
| UL Class H 180°C Temp. Code | | | | | | E |

| | | |
|---|---|---|
| Nom. Open Circuit Voltage | | 266 |
| Input Power (W) | | 185 |
| Power Factor(≥%) | | 90 |
| Regulation (± %) | Line Volts | 5 |
| | Lamp Watts | 10 |
| Min. Starting Temp | | -20°F / -30°C |
| Ballast Dimensions (inches) | A | 2.3" |
| | B | 3.9" |
| Ballast Net Weight (lbs) | | 7.0 |
| Lead Length (inches) | | 12 |
| Capacitor | Capacitance (µF) | 16 |
| | Min VAC Rating (V) | 280 |
| Requires Ignitor Model | | GMHR1 |
| Coil Material (Pri./ Sec.) | | Cu / Cu |

## 60 HZ. TEST PROCEDURES

| | | | | | | | |
|---|---|---|---|---|---|---|---|
| Short Circuit Current (A) | Secondary | Min | 1.8 | | | | |
| | | Max | 3.0 | | | | |
| | Input | Min | | | | | 0.2 |
| | | Max | | | | | 0.4 |
| Open Circuit Voltage (V) | | Min | 235 | | | | |
| | | Max | 300 | | | | |
| High Potential Test (V) | | 1 Minute | 1600 | | | | |
| | | 1 Second | 1900 | | | | |

## REFERENCE LAMP DATA

| | Test Range | ANSI Standard |
|---|---|---|
| Starting Current (A) | | 1.8 ~ 3.0 |
| CCF | 1.6 | ≤1.8 |
| OCV (V) | 235 ~ 300 | |
| Off Time (Sec.) | | |
| Peak Current (A) | | |
| Overshoot (V) | | |
| VSS (V) | | |

## OPTIONAL FEATURES

(ADD SUFFIX FOR OPTIONS)

| | |
|---|---|
| -WB | With welded bracket |
| -I | With ignitor |
| -DC | With dry film capacitor |
| -OC | With oil filled capacitor |
| -K | With distributor replacement kit (includes bracket, capacitor and ignitor as necessary) |

HATCH

**PART NO.**

# GC150-MLT-HXCA

MAGNETIC

## PHYSICAL DIMENSIONS

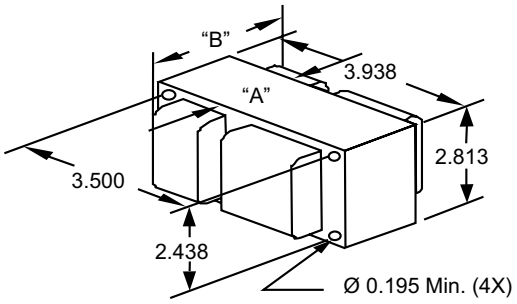


## WIRING DIAGRAM

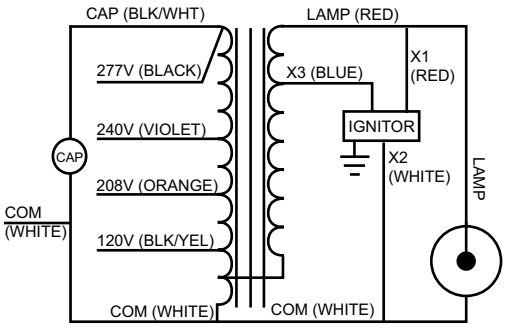


## CAPACITOR

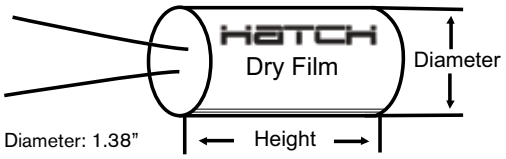


Diameter: 1.38"

Height: 3.17"

## IGNITOR

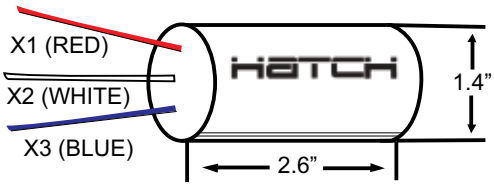


Pulse Height (kV): 3.0 ~ 4.0

Pulse Width (≥ μs): 1.3 @ 2.7kV

RoHS COMPLIANT

c UL us

**2 YEAR WARRANTY FROM DATE OF MANUFACTURE**

## MAGNETIC HID BALLAST

| | | | |
|---|---|---|---|
| **Ballast Type** | Magnetic Pulse Start | **Circuit Type** | HX-HPF |
| **Lamp** | 150W Metal Halide M102/M142 | **Frequency** | 60Hz |

## ELECTRICAL SPECIFICATIONS

| | | Quad Tap | | | | |
|---|---|---|---|---|---|---|
| **Input Voltage (V)** | | **120** | **208** | **240** | **277** | |
| Line Current (A) | Operating | 1.6 | 1.0 | 0.9 | 0.8 | |
| | Open Circuit | 3.4 | 2.0 | 1.7 | 1.5 | |
| | Starting | 1.9 | 1.2 | 1.0 | 0.9 | |
| Recommended Fuse | | 5 | 3 | 2 | 2 | |
| Input Voltage At Lamp Dropout | | 80 | 130 | 150 | 175 | |
| UL Class H 180°C Temp. Code | | B | B | A | A | |
| UL Class N 200°C Temp. Code | | A | A | A | A | |
| Nom. Open Circuit Voltage | | 255 | | | | |
| Input Power (W) | | 182 | | | | |
| Power Factor(≥ %) | | 90 | | | | |
| Regulation (± %) | Line Volts | 5 | | | | |
| | Lamp Watts | 10 | | | | |
| Min. Starting Temp | | -20°F / -30°C | | | | |
| Ballast Dimensions (inches) | A | 2.28 | | | | |
| | B | 3.8 | | | | |
| Ballast Net Weight (lbs) | | 6.8 | | | | |
| Lead Length (inches) | | 12 | | | | |
| Capacitor | Capacitance (μF) | 16 | | | | |
| | Min VAC Rating (V) | 280 | | | | |
| Requires Ignitor Model | | GMHR1 | | | | |
| Coil Material (Pri./ Sec.) | | Cu / Al | | | | |

## 60 HZ. TEST PROCEDURES

| | | | | | | | |
|---|---|---|---|---|---|---|---|
| Short Circuit Current (A) | Secondary | Min | 1.8 | | | | |
| | | Max | 3.0 | | | | |
| | Input | Min | 0.9 | 0.5 | 0.4 | 0.4 | |
| | | Max | 2.8 | 1.5 | 1.3 | 1.2 | |
| Open Circuit Voltage (V) | | Min | 235 | | | | |
| | | Max | 290 | | | | |
| High Potential Test (V) | | 1 Minute | 1600 | | | | |
| | | 1 Second | 1900 | | | | |

## REFERENCE LAMP DATA

| | Test Range | ANSI Standard |
|---|---|---|
| Starting Current (A) | | 1.8 ~ 3.0 |
| CCF | 1.6 | ≤ 1.8 |
| OCV (V) | 235 ~ 290 | |
| Off Time (Sec.) | | |
| Peak Current (A) | | |
| Overshoot (V) | | |
| VSS (V) | | |

## OPTIONAL FEATURES

(ADD SUFFIX FOR OPTIONS)

| | |
|---|---|
| -WB | With welded bracket |
| -I | With ignitor |
| -DC | With dry film capacitor |
| -OC | With oil filled capacitor |
| -K | With distributor replacement kit (includes bracket, capacitor and ignitor as necessary) |

HATCH

**PART NO.**
# GC175-ML5-CWCC

MAGNETIC

# MAGNETIC HID BALLAST

| | | | |
|---|---|---|---|
| **Ballast Type** | Magnetic Pulse Start | **Circuit Type** | CWA |
| **Lamp** | 175W Metal Halide M137 OR M152 | **Frequency** | 60Hz |

## PHYSICAL DIMENSIONS

4 1/4" x 4 3/4" Core

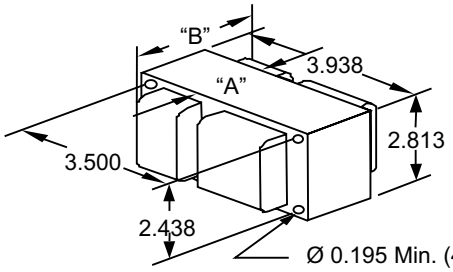


## WIRING DIAGRAM

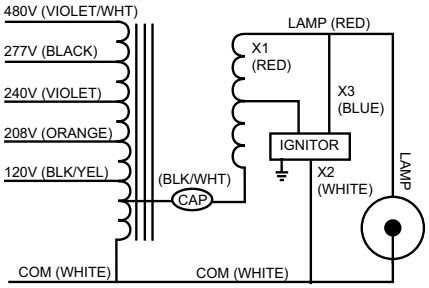


## CAPACITOR

Dry Type or Oil Oval

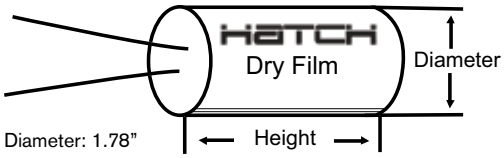


Diameter: 1.78"

Height: 3.15"

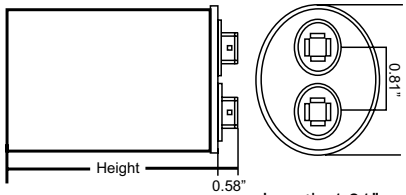


Height: 2.75"

Length: 1.91"

Width: 2.91"

## IGNITOR

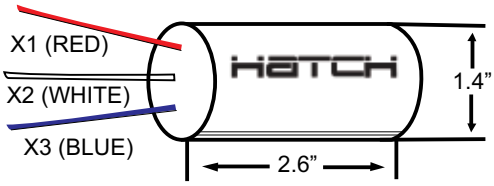


Pulse Height (kV): 3.0 ~ 4.0

Pulse Width (≥ µs): 1.3 @ 2.7kV

RoHS COMPLIANT

c UL us

**2 YEAR WARRANTY FROM DATE OF MANUFACTURE**

## ELECTRICAL SPECIFICATIONS

| | | Five Tap | | | | |
|---|---|---|---|---|---|---|
| **Input Voltage (V)** | | **120** | **208** | **240** | **277** | **480** |
| Line Current (A) | Operating | 1.7 | 1.0 | 0.9 | 0.8 | 0.4 |
| | Open Circuit | 2.0 | 1.2 | 1.1 | 0.9 | 0.6 |
| | Starting | 1.1 | 0.6 | 0.5 | 0.5 | 0.3 |
| Recommended Fuse | | 10 | 5 | 4 | 3 | 2 |
| Input Voltage At Lamp Dropout | | 65 | 115 | 128 | 150 | 270 |
| UL Class H 180°C Temp. Code | | B | B | B | B | C |
| Nom. Open Circuit Voltage | | 290 | | | | |
| Input Power (W) | | 210 | | | | |
| Power Factor(≥ %) | | 90 | | | | |
| Regulation (± %) | Line Volts | 10 | | | | |
| | Lamp Watts | 10 | | | | |
| Min. Starting Temp | | -20°F / -30°C | | | | |
| Ballast Dimensions (inches) | A | 2.42 | | | | |
| | B | 3.5 | | | | |
| Ballast Net Weight (lbs) | | 7.8 | | | | |
| Lead Length (inches) | | 12 | | | | |
| Capacitor | Capacitance (µF) | 10 | | | | |
| | Min VAC Rating (V) | 400 | | | | |
| Requires Ignitor Model | | GMHR3 | | | | |
| Coil Material (Pri./ Sec.) | | Cu / Cu | | | | |

## 60 HZ. TEST PROCEDURES

| | | | | | | | |
|---|---|---|---|---|---|---|---|
| Short Circuit Current (A) | Secondary | Min | 1.5 | | | | |
| | | Max | 2.5 | | | | |
| | Input | Min | 0.8 | 0.5 | 0.4 | 0.3 | 0.2 |
| | | Max | 2.4 | 1.5 | 1.2 | 0.9 | 0.6 |
| Open Circuit Voltage (V) | | Min | 254 | | | | |
| | | Max | 320 | | | | |
| High Potential Test (V) | | 1 Minute | 2000 | | | | |
| | | 1 Second | 2400 | | | | |

## REFERENCE LAMP DATA

| | Test Range | ANSI Standard |
|---|---|---|
| Starting Current (A) | | 1.5 ~ 2.5 |
| CCF | 1.6 | ≤ 1.8 |
| OCV (V) | 254 ~ 320 | |
| Off Time (Sec.) | 3.2 | ≤ 3.8 |
| Peak Current (A) | 1.8 | ≤ 2.3 |
| Overshoot (V) | 25 | ≤ 45 |
| VSS (V) | 278 | ≥ 270 |

## OPTIONAL FEATURES

(ADD SUFFIX FOR OPTIONS)

| | |
|---|---|
| -WB | With welded bracket |
| -I | With ignitor |
| -DC | With dry film capacitor |
| -OC | With oil filled capacitor |
| -K | With distributor replacement kit (includes bracket, capacitor and ignitor as necessary) |

HATCH

**PART NO.**
# GC175-MLT-CWCC

MAGNETIC

# MAGNETIC HID BALLAST

| | | | |
|---|---|---|---|
| **Ballast Type** | Magnetic Pulse Start | **Circuit Type** | CWA |
| **Lamp** | 175W Metal Halide M137/M152 | **Frequency** | 60Hz |

## PHYSICAL DIMENSIONS

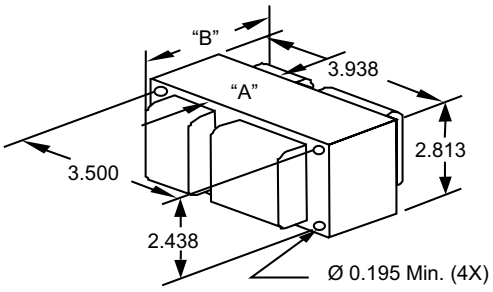


## WIRING DIAGRAM

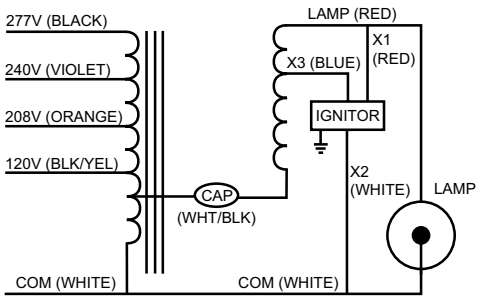


## CAPACITOR

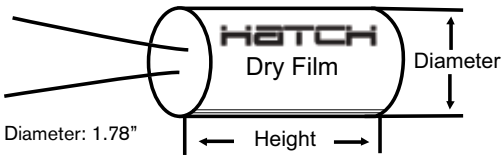


Diameter: 1.78"
Height: 3.15"

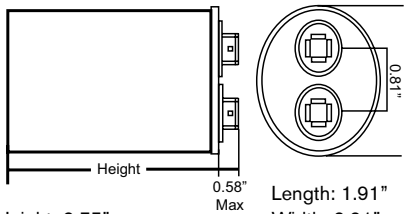


Height: 2.75"
Length: 1.91"
Width: 2.91"

## IGNITOR

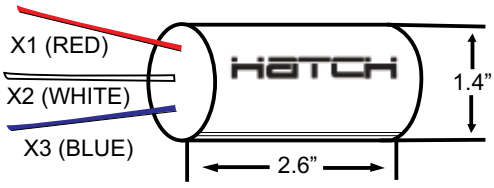


Pulse Height (kV): 3.0 ~ 4.0
Pulse Width (≥ µs): 1.3 @ 2.7kV

RoHS COMPLIANT

c UL us

**2 YEAR WARRANTY FROM DATE OF MANUFACTURE**

## ELECTRICAL SPECIFICATIONS

| | | Quad Tap | | | | |
|---|---|---|---|---|---|---|
| **Input Voltage (V)** | | **120** | **208** | **240** | **277** | |
| Line Current (A) | Operating | 1.764 | 1.091 | 0.904 | 0.78 | |
| | Open Circuit | 1.6 | 0.9 | 0.8 | 0.7 | |
| | Starting | 1.3 | 0.7 | 0.6 | 0.5 | |
| Recommended Fuse | | 10 | 5 | 4 | 3 | |
| Input Voltage At Lamp Dropout | | 65 | 115 | 128 | 150 | |
| UL Class H 180°C Temp. Code | | C | D | B | B | |
| Nom. Open Circuit Voltage | | 305 | | | | |
| Input Power (W) | | 208 | | | | |
| Power Factor(≥ %) | | 90 | | | | |
| Regulation (± %) | Line Volts | 10 | | | | |
| | Lamp Watts | 10 | | | | |
| Min. Starting Temp | | -20°F / -30°C | | | | |
| Ballast Dimensions (inches) | A | 2.05 | | | | |
| | B | 3.5 | | | | |
| Ballast Net Weight (lbs) | | 7.2 | | | | |
| Lead Length (inches) | | 12 | | | | |
| Capacitor | Capacitance (µF) | 11.5 | | | | |
| | Min VAC Rating (V) | 345 | | | | |
| Requires Ignitor Model | | GMHR3 | | | | |
| Coil Material (Pri./ Sec.) | | Cu / Cu | | | | |

## 60 HZ. TEST PROCEDURES

| | | | | | | | |
|---|---|---|---|---|---|---|---|
| Short Circuit Current (A) | Secondary | Min | 1.5 | | | | |
| | | Max | 2.5 | | | | |
| | Input | Min | 0.8 | 0.4 | 0.4 | 0.3 | |
| | | Max | 2.3 | 1.3 | 1.2 | 1.0 | |
| Open Circuit Voltage (V) | | Min | 250 | | | | |
| | | Max | 340 | | | | |
| High Potential Test (V) | | 1 Minute | 2000 | | | | |
| | | 1 Second | 2400 | | | | |

## REFERENCE LAMP DATA

| | Test Range | ANSI Standard |
|---|---|---|
| Starting Current (A) | | 1.5 ~ 2.5 |
| CCF | 1.6 | ≤ 1.8 |
| OCV (V) | 250 ~ 340 | |
| Off Time (Sec.) | 2.2 | ≤ 3.8 |
| Peak Current (A) | 3.2 | ≤ 2.3 |
| Overshoot (V) | 30 | ≤ 45 |
| VSS (V) | 273 | ≥ 270 |

## OPTIONAL FEATURES

(ADD SUFFIX FOR OPTIONS)

| | |
|---|---|
| -WB | With welded bracket |
| -I | With ignitor |
| -DC | With dry film capacitor |
| -OC | With oil filled capacitor |
| -K | With distributor replacement kit (includes bracket, capacitor and ignitor as necessary) |

HATCH

**PART NO.**
# GC250-ML5-CWCA

MAGNETIC

# MAGNETIC HID BALLAST

| | | | |
|---|---|---|---|
| **Ballast Type** | Magnetic Pulse Start | **Circuit Type** | CWA |
| **Lamp** | 250W Metal Halide M138 OR M153 | **Frequency** | 60Hz |

## PHYSICAL DIMENSIONS

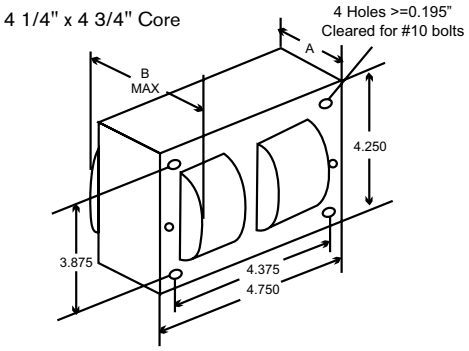


## WIRING DIAGRAM

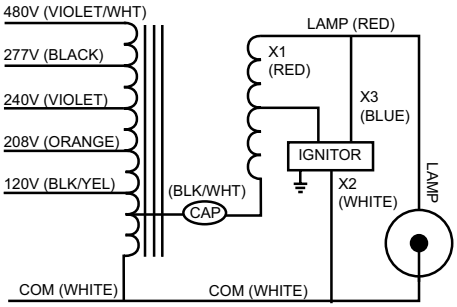


## CAPACITOR

Dry Type or Oil Oval

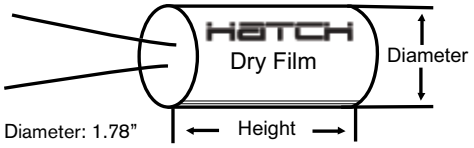


Diameter: 1.78"

Height: 3.15"

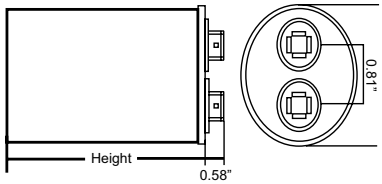


Height: 2.75"

Length: 1.91"

Width: 2.91"

## IGNITOR

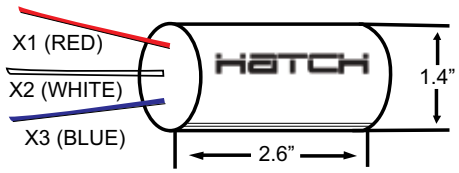


Pulse Height (kV): 3.0 ~ 4.0

Pulse Width (≥ µs): 1.3 @ 2.7kV

RoHS COMPLIANT

c UL us

**2 YEAR WARRANTY FROM DATE OF MANUFACTURE**

## ELECTRICAL SPECIFICATIONS

| | | Five Tap | | | | |
|---|---|---|---|---|---|---|
| **Input Voltage (V)** | | **120** | **208** | **240** | **277** | **480** |
| Line Current (A) | Operating | 2.45 | 1.4 | 1.25 | 1.1 | 0.65 |
| | Open Circuit | 1.4 | 0.9 | 0.7 | 0.6 | 0.4 |
| | Starting | 2.1 | 1.2 | 1.0 | 0.9 | 0.5 |
| Recommended Fuse | | 12 | 6 | 6 | 5 | 3 |
| Input Voltage At Lamp Dropout | | 50 | 80 | 110 | 125 | 230 |
| UL Class H 180°C Temp. Code | | A | A | A | A | A |
| Nom. Open Circuit Voltage | | 286 | | | | |
| Input Power (W) | | 282 | | | | |
| Power Factor(≥ %) | | 90 | | | | |
| Regulation (± %) | Line Volts | 10 | | | | |
| | Lamp Watts | 10 | | | | |
| Min. Starting Temp | | -20°F / -30°C | | | | |
| Ballast Dimensions (inches) | A | 1.99 | | | | |
| | B | 3.9 | | | | |
| Ballast Net Weight (lbs) | | 11.5 | | | | |
| Lead Length (inches) | | 12 | | | | |
| Capacitor | Capacitance (µF) | 15 | | | | |
| | Min VAC Rating (V) | 400 | | | | |
| Requires Ignitor Model | | GMHR3 | | | | |
| Coil Material (Pri./ Sec.) | | Cu / Al | | | | |

## 60 HZ. TEST PROCEDURES

| | | | | | | | |
|---|---|---|---|---|---|---|---|
| Short Circuit Current (A) | Secondary | Min | 2.1 | | | | |
| | | Max | 3.2 | | | | |
| | Input | Min | 1.1 | 0.6 | 0.6 | 0.5 | 0.3 |
| | | Max | 3.3 | 1.9 | 1.7 | 1.5 | 1.0 |
| Open Circuit Voltage (V) | | Min | 254 | | | | |
| | | Max | 320 | | | | |
| High Potential Test (V) | | 1 Minute | 1800 | | | | |
| | | 1 Second | 2100 | | | | |

## REFERENCE LAMP DATA

| | Test Range | ANSI Standard |
|---|---|---|
| Starting Current (A) | | 2.1 ~ 3.2 |
| CCF | 1.5 | ≤ 1.8 |
| OCV (V) | 254 ~ 320 | |
| Off Time (Sec.) | 2.2 | ≤ 2.3 |
| Peak Current (A) | 4.1 | ≤ 5.0 |
| Overshoot (V) | 40 | ≤ 75 |
| VSS (V) | 272 | ≥ 270 |

## OPTIONAL FEATURES

(ADD SUFFIX FOR OPTIONS)

| | |
|---|---|
| -WB | With welded bracket |
| -I | With ignitor |
| -DC | With dry film capacitor |
| -OC | With oil filled capacitor |
| -K | With distributor replacement kit (includes bracket, capacitor and ignitor as necessary) |

HATCH

**PART NO.**
# GC250-MLT-CWAA

MAGNETIC

# MAGNETIC HID BALLAST

| | | | |
|---|---|---|---|
| **Ballast Type** | Magnetic Pulse Start | **Circuit Type** | CWA |
| **Lamp** | 250W Metal Halide M138/M153 | **Frequency** | 60Hz |

## ELECTRICAL SPECIFICATIONS

| | | | Quad Tap | | | | |
|---|---|---|---|---|---|---|---|
| **Input Voltage (V)** | | | **120** | **208** | **240** | **277** | |
| Line Current (A) | Operating | | 2.45 | 1.40 | 1.25 | 1.10 | |
| | Open Circuit | | 1.5 | 0.8 | 0.7 | 0.6 | |
| | Starting | | 2.1 | 1.2 | 1.0 | 0.9 | |
| Recommended Fuse | | | 10 | 6 | 6 | 5 | |
| Input Voltage At Lamp Dropout | | | 60 | 110 | 120 | 150 | |
| UL Class H 180°C Temp. Code | | | A | A | A | A | |
| Nom. Open Circuit Voltage | | | 274 | | | | |
| Input Power (W) | | | 278 | | | | |
| Power Factor(≥ %) | | | 90 | | | | |
| Regulation (± %) | Line Volts | | 10 | | | | |
| | Lamp Watts | | 10 | | | | |
| Min. Starting Temp | | | -20°F / -30°C | | | | |
| Ballast Dimensions (inches) | | A | 1.85 | | | | |
| | | B | 3.78 | | | | |
| Ballast Net Weight (lbs) | | | 9.8 | | | | |
| Lead Length (inches) | | | 12 | | | | |
| Capacitor | Capacitance (µF) | | 15 | | | | |
| | Min VAC Rating (V) | | 400 | | | | |
| Requires Ignitor Model | | | GMHR3 | | | | |
| Coil Material (Pri./ Sec.) | | | Al / Al | | | | |

## 60 HZ. TEST PROCEDURES

| | | | | | | | |
|---|---|---|---|---|---|---|---|
| Short Circuit Current (A) | Secondary | Min | 2.1 | | | | |
| | | Max | 3.2 | | | | |
| | Input | Min | 1.1 | 0.7 | 0.5 | 0.4 | |
| | | Max | 3.3 | 2.4 | 1.6 | 1.5 | |
| Open Circuit Voltage (V) | | Min | 254 | | | | |
| | | Max | 320 | | | | |
| High Potential Test (V) | | 1 Minute | 1900 | | | | |
| | | 1 Second | 2300 | | | | |

## PHYSICAL DIMENSIONS

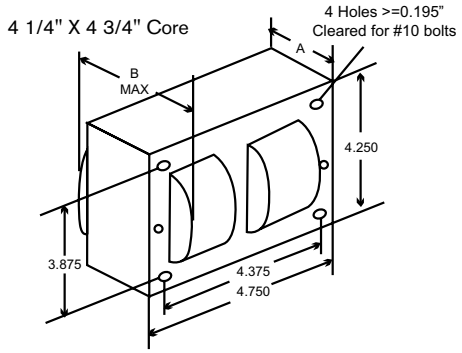


## WIRING DIAGRAM

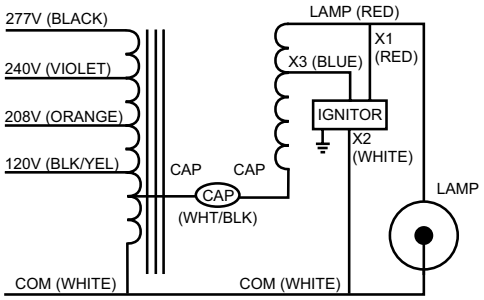


## CAPACITOR

Dry Type or Oil Oval

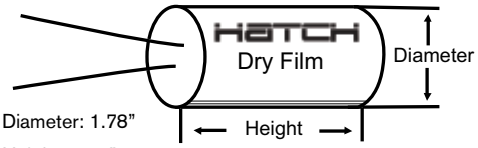


Diameter: 1.78"
Height: 3.15"

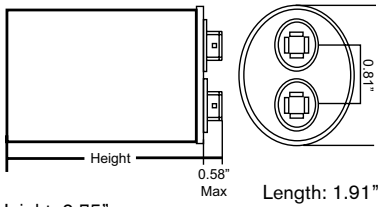


Height: 2.75"
Length: 1.91"
Width: 2.91"

## IGNITOR

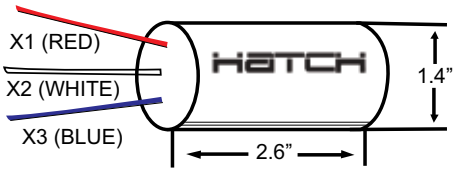


Pulse Height (kV): 3.0 ~ 4.0
Pulse Width (≥ µs): 1.3 @ 2.7kV

RoHS COMPLIANT

c UL us

**2 YEAR WARRANTY FROM DATE OF MANUFACTURE**

## REFERENCE LAMP DATA

| | Test Range | ANSI Standard |
|---|---|---|
| Starting Current (A) | | 2.1 ~ 3.2 |
| CCF | 1.5 | ≤ 1.8 |
| OCV (V) | 254 ~ 320 | |
| Off Time (Sec.) | 2.2 | ≤ 2.3 |
| Peak Current (A) | 4.4 | ≤ 5.0 |
| Overshoot (V) | 40 | ≤ 75 |
| VSS (V) | 272 | ≥ 270 |

## OPTIONAL FEATURES

(ADD SUFFIX FOR OPTIONS)

| | |
|---|---|
| -WB | With welded bracket |
| -I | With ignitor |
| -DC | With dry film capacitor |
| -OC | With oil filled capacitor |
| -K | With distributor replacement kit (includes bracket, capacitor and ignitor as necessary) |

**Part No.**

# GC320-ML5-CWCA

MAGNETIC

# MAGNETIC HID BALLAST

| | | | |
|---|---|---|---|
| **Ballast Type** | Magnetic Pulse Start | **Circuit Type** | CWA |
| **Lamp** | 320W Metal Halide M132 OR M154 | **Frequency** | 60Hz |

## PHYSICAL DIMENSIONS

4 1/4" x 4 3/4" Core

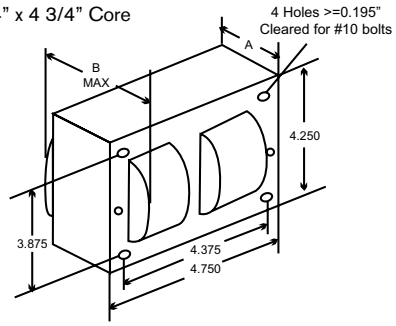


## WIRING DIAGRAM

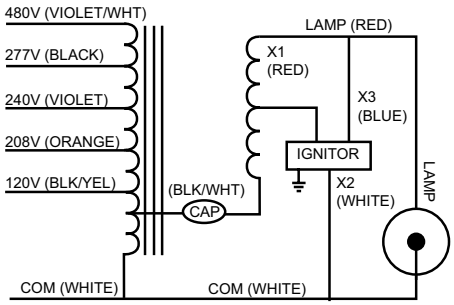


## CAPACITOR

Dry Type or Oil Oval

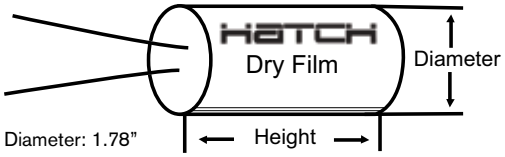


Diameter: 1.78"

Height: 3.15"

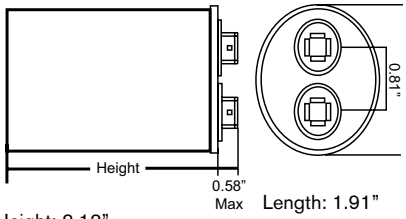


Height: 3.13"

Length: 1.91"

Width: 2.91"

## IGNITOR

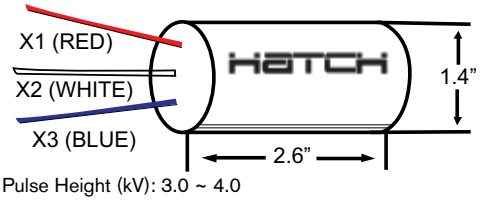


Pulse Height (kV): 3.0 ~ 4.0

Pulse Width (≥ µs): 1.3 @ 2.7kV

RoHS COMPLIANT

c UL us

**2 Year Warranty From Date of Manufacture**

## ELECTRICAL SPECIFICATIONS

| | | Five Tap | | | | |
|---|---|---|---|---|---|---|
| **Input Voltage (V)** | | **120** | **208** | **240** | **277** | **480** |
| Line Current (A) | Operating | 3.1 | 1.8 | 1.55 | 1.35 | 0.78 |
| | Open Circuit | 1.8 | 1.1 | 0.9 | 0.8 | 0.5 |
| | Starting | 2.2 | 1.4 | 1.2 | 1.0 | 0.5 |
| Recommended Fuse | | 12 | 8 | 6 | 5 | 3 |
| Input Voltage At Lamp Dropout | | 60 | 110 | 120 | 150 | 225 |
| UL Class H 180°C Temp. Code | | C | C | C | C | C |
| Nom. Open Circuit Voltage | | 276 | | | | |
| Input Power (W) | | 355 | | | | |
| Power Factor(≥ %) | | 90 | | | | |
| Regulation (± %) | Line Volts | 10 | | | | |
| | Lamp Watts | 10 | | | | |
| Min. Starting Temp | | -20°F / -30°C | | | | |
| Ballast Dimensions (inches) | A | 2.18 | | | | |
| | B | 4.4 | | | | |
| Ballast Net Weight (lbs) | | 11.5 | | | | |
| Lead Length (inches) | | 12 | | | | |
| Capacitor | Capacitance (µF) | 21 | | | | |
| | Min VAC Rating (V) | 345 | | | | |
| Requires Ignitor Model | | GMHR3 | | | | |
| Coil Material (Pri./ Sec.) | | Cu / Al | | | | |

## 60 HZ. TEST PROCEDURES

| | | | | | | | |
|---|---|---|---|---|---|---|---|
| Short Circuit Current (A) | Secondary | Min | 2.6 | | | | |
| | | Max | 4.0 | | | | |
| | Input | Min | 1.2 | 0.7 | 0.6 | 0.5 | 0.3 |
| | | Max | 3.5 | 2.2 | 2.0 | 1.8 | 1.0 |
| Open Circuit Voltage (V) | | Min | 254 | | | | |
| | | Max | 310 | | | | |
| High Potential Test (V) | | 1 Minute | 1600 | | | | |
| | | 1 Second | 1900 | | | | |

## REFERENCE LAMP DATA

| | Test Range | ANSI Standard |
|---|---|---|
| Starting Current (A) | | 2.6 ~ 4.0 |
| CCF | 1.6 | ≤ 1.8 |
| OCV (V) | 254 ~ 310 | |
| Off Time (Sec.) | 2.2 | ≤ 2.3 |
| Peak Current (A) | 6.0 | ≤ 7.0 |
| Overshoot (V) | 44 | ≤ 80 |
| VSS (V) | 276 | ≥ 270 |

## OPTIONAL FEATURES

(ADD SUFFIX FOR OPTIONS)

| | |
|---|---|
| -WB | With welded bracket |
| -I | With ignitor |
| -DC | With dry film capacitor |
| -OC | With oil filled capacitor |
| -K | With distributor replacement kit (includes bracket, capacitor and ignitor as necessary) |

HATCH

**PART NO.**
# GC320-MLT-CWAA

MAGNETIC

# MAGNETIC HID BALLAST

| | | | |
|---|---|---|---|
| **Ballast Type** | Magnetic Pulse Start | **Circuit Type** | CWA |
| **Lamp** | 320W Metal Halide M132/M154 | **Frequency** | 60Hz |

## PHYSICAL DIMENSIONS

4 1/4" x 4 3/4" Core

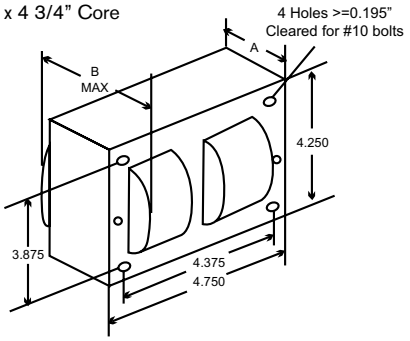


## WIRING DIAGRAM

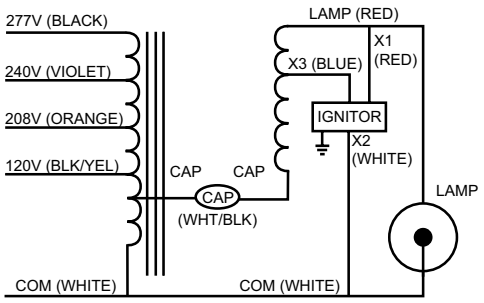


## CAPACITOR

Dry Type or Oil Oval

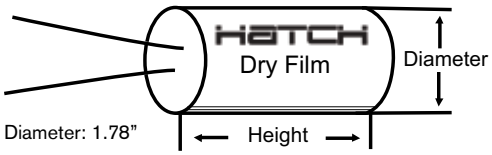


Diameter: 1.78"

Height: 3.15"

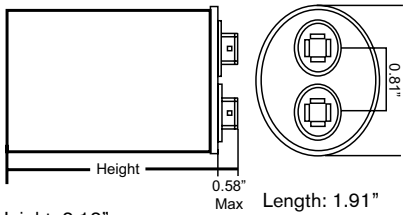


Height: 3.13"

Length: 1.91"

Width: 2.91"

## IGNITOR

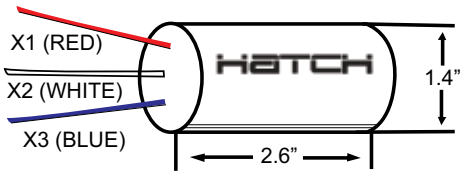


Pulse Height (kV): 3.0 ~ 4.0

Pulse Width (≥ µs): 1.3 @ 2.7kV

RoHS COMPLIANT

c UL us

**2 YEAR WARRANTY FROM DATE OF MANUFACTURE**

## ELECTRICAL SPECIFICATIONS

| | | Quad Tap | | | | |
|---|---|---|---|---|---|---|
| **Input Voltage (V)** | | **120** | **208** | **240** | **277** | |
| Line Current (A) | Operating | 3.1 | 1.8 | 1.55 | 1.35 | |
| | Open Circuit | 1.1 | 0.6 | 0.5 | 0.4 | |
| | Starting | 2.8 | 1.3 | 1.2 | 1.0 | |
| Recommended Fuse | | 10 | 6 | 6 | 5 | |
| Input Voltage At Lamp Dropout | | 60 | 110 | 120 | 140 | |
| UL Class H 180°C Temp. Code | | B | B | B | B | |
| Nom. Open Circuit Voltage | | 279 | | | | |
| Input Power (W) | | 361 | | | | |
| Power Factor(≥ %) | | 90 | | | | |
| Regulation (± %) | Line Volts | 10 | | | | |
| | Lamp Watts | 10 | | | | |
| Min. Starting Temp | | -20°F / -30°C | | | | |
| Ballast Dimensions (inches) | A | 2.18 | | | | |
| | B | 4.4 | | | | |
| Ballast Net Weight (lbs) | | 11.0 | | | | |
| Lead Length (inches) | | 12 | | | | |
| Capacitor | Capacitance (µF) | 21 | | | | |
| | Min VAC Rating (V) | 345 | | | | |
| Requires Ignitor Model | | GMHR3 | | | | |
| Coil Material (Pri./ Sec.) | | Al / Al | | | | |

## 60 HZ. TEST PROCEDURES

| | | | | | | | |
|---|---|---|---|---|---|---|---|
| Short Circuit Current (A) | Secondary | Min | 2.6 | | | | |
| | | Max | 4.0 | | | | |
| | Input | Min | 1.2 | 0.7 | 0.6 | 0.5 | |
| | | Max | 3.5 | 2.2 | 2.0 | 1.8 | |
| Open Circuit Voltage (V) | | Min | 254 | | | | |
| | | Max | 310 | | | | |
| High Potential Test (V) | | 1 Minute | 1600 | | | | |
| | | 1 Second | 1900 | | | | |

## REFERENCE LAMP DATA

| | Test Range | ANSI Standard |
|---|---|---|
| Starting Current (A) | | 2.6 ~ 4.0 |
| CCF | 1.6 | ≤ 1.8 |
| OCV (V) | 254 ~ 310 | |
| Off Time (Sec.) | 2.2 | ≤ 2.3 |
| Peak Current (A) | 6.0 | ≤ 7.0 |
| Overshoot (V) | 30 | ≤ 80 |
| VSS (V) | 276 | ≥ 270 |

## OPTIONAL FEATURES

(ADD SUFFIX FOR OPTIONS)

| | |
|---|---|
| -WB | With welded bracket |
| -I | With ignitor |
| -DC | With dry film capacitor |
| -OC | With oil filled capacitor |
| -K | With distributor replacement kit (includes bracket, capacitor and ignitor as necessary) |

**Part No.**

# GC750-ML5-CWCA

MAGNETIC

# MAGNETIC HID BALLAST

| | | | |
|---|---|---|---|
| **Ballast Type** | Magnetic Pulse Start | **Circuit Type** | CWA |
| **Lamp** | 750W Metal Halide M149 OR M181 | **Frequency** | 60Hz |

## PHYSICAL DIMENSIONS

4 1/4" x 6" Core

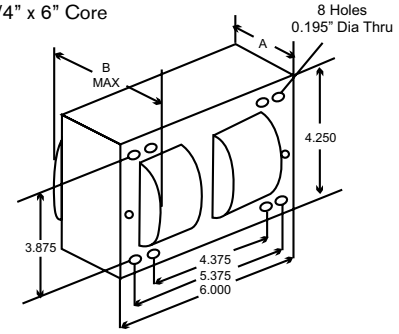


## WIRING DIAGRAM

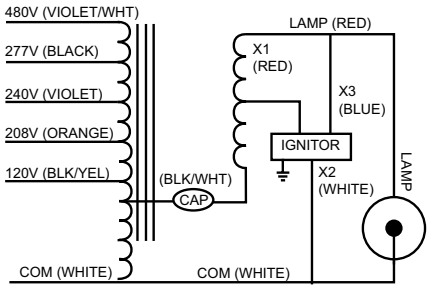


## CAPACITOR

Dry Type or Oil Oval

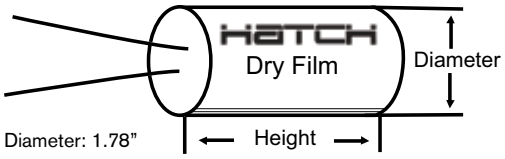


Diameter: 1.78"

Height: 3.15"

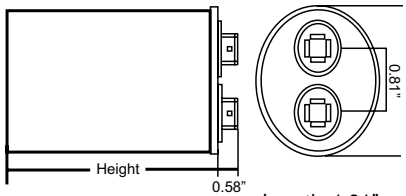


Height: 3.88"

Length: 1.91"

Width: 2.91"

## IGNITOR

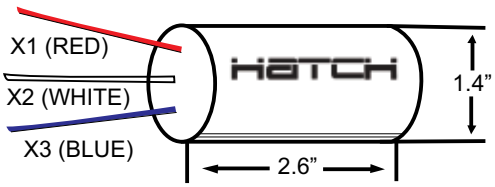


Pulse Height (kV): 3.0 ~ 4.0

Pulse Width (≥ µs): 1.5 @ 2.7kV

RoHS COMPLIANT

c UL us

**2 Year Warranty From Date of Manufacture**

## ELECTRICAL SPECIFICATIONS

| | | Five Tap | | | | |
|---|---|---|---|---|---|---|
| **Input Voltage (V)** | | **120** | **208** | **240** | **277** | **480** |
| Line Current (A) | Operating | 7.2 | 4.1 | 3.6 | 3.1 | 1.8 |
| | Open Circuit | 5.6 | 3.2 | 2.8 | 2.5 | 1.6 |
| | Starting | 4.0 | 2.4 | 2.1 | 1.8 | 1.2 |
| Recommended Fuse | | 20 | 10 | 10 | 8 | 6 |
| Input Voltage At Lamp Dropout | | 65 | 110 | 130 | 140 | 250 |
| UL Class H 180°C Temp. Code | | B | B | A | A | A |
| UL Class N 200°C Temp. Code | | A | A | A | A | A |
| Nom. Open Circuit Voltage | | 371 | | | | |
| Input Power (W) | | 810 | | | | |
| Power Factor(≥%) | | 90 | | | | |
| Regulation (± %) | Line Volts | 10 | | | | |
| | Lamp Watts | 10 | | | | |
| Min. Starting Temp | | -20°F / -30°C | | | | |
| Ballast Dimensions (inches) | A | 2.83 | | | | |
| | B | 4.8 | | | | |
| Ballast Net Weight (lbs) | | 18.8 | | | | |
| Lead Length (inches) | | 12 | | | | |
| Capacitor | Capacitance (µF) | 24 | | | | |
| | Min VAC Rating (V) | 480 | | | | |
| Requires Ignitor Model | | GMHR2 | | | | |
| Coil Material (Pri./ Sec.) | | Cu / Al | | | | |

## 60 HZ. TEST PROCEDURES

| | | | | | | | |
|---|---|---|---|---|---|---|---|
| Short Circuit Current (A) | Secondary | Min | 4.0 | | | | |
| | | Max | 6.1 | | | | |
| | Input | Min | 2.0 | 1.2 | 1.0 | 0.9 | 0.5 |
| | | Max | 6.0 | 3.5 | 3.1 | 2.6 | 1.5 |
| Open Circuit Voltage (V) | | Min | 330 | | | | |
| | | Max | 410 | | | | |
| High Potential Test (V) | | 1 Minute | 2000 | | | | |
| | | 1 Second | 2400 | | | | |

## REFERENCE LAMP DATA

| | Test Range | ANSI Standard |
|---|---|---|
| Starting Current (A) | | 4.0 ~ 6.1 |
| CCF | 1.5 | ≤1.8 |
| OCV (V) | 330 ~ 410 | |
| Off Time (Sec.) | 2.2 | ≤2.4 |
| Peak Current (A) | 9.5 | ≤10.6 |
| Overshoot (V) | 62 | ≤100 |
| VSS (V) | 360 | ≥310 |

## OPTIONAL FEATURES

(ADD SUFFIX FOR OPTIONS)

| | |
|---|---|
| -WB | With welded bracket |
| -I | With ignitor |
| -DC | With dry film capacitor |
| -OC | With oil filled capacitor |
| -K | With distributor replacement kit (includes bracket, capacitor and ignitor as necessary) |

**Part No.**
# GC750-MLT-CWCA

MAGNETIC

# MAGNETIC HID BALLAST

| | | | |
|---|---|---|---|
| **Ballast Type** | Magnetic Pulse Start | **Circuit Type** | CWA |
| **Lamp** | 750W Metal Halide M149/M181 | **Frequency** | 60Hz |

## PHYSICAL DIMENSIONS

4 1/4" x 6" Core

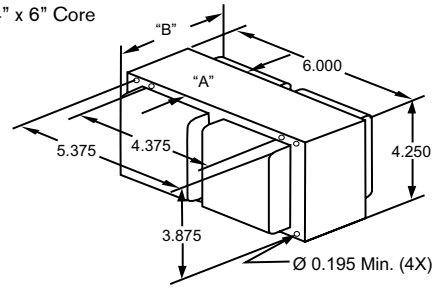


## WIRING DIAGRAM

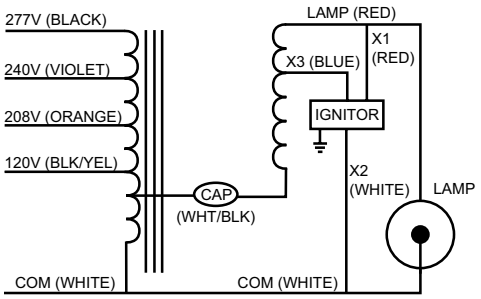


## CAPACITOR

Dry Type or Oil Oval

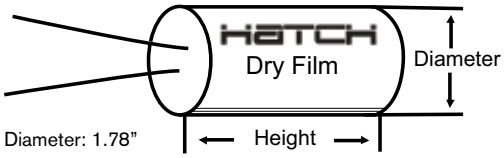


Diameter: 1.78"

Height: 3.15"

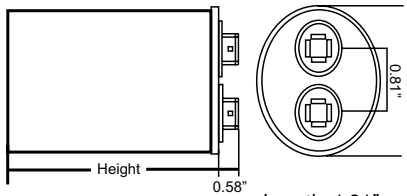


Height: 3.88"

Length: 1.91"

Width: 2.91"

## IGNITOR

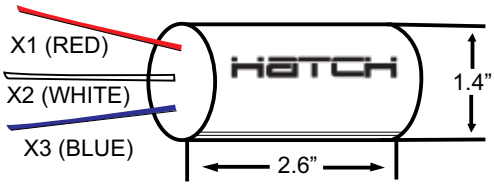


Pulse Height (kV): 3.0 ~ 4.0

Pulse Width (≥ µs): 1.5 @ 2.7kV

RoHS COMPLIANT

c UL us

**2 Year Warranty From Date of Manufacture**

## ELECTRICAL SPECIFICATIONS

| | | | Quad Tap | | | | |
|---|---|---|---|---|---|---|---|
| **Input Voltage (V)** | | | **120** | **208** | **240** | **277** | |
| Line Current (A) | Operating | | 7.23 | 4.05 | 3.64 | 3.13 | |
| | Open Circuit | | 6.2 | 3.7 | 3.3 | 3.0 | |
| | Starting | | 4.0 | 2.4 | 2.1 | 1.8 | |
| Recommended Fuse | | | 20 | 10 | 10 | 8 | |
| Input Voltage At Lamp Dropout | | | 65 | 110 | 130 | 140 | |
| UL Class H 180°C Temp. Code | | | C | B | C | C | |
| UL Class N 200°C Temp. Code | | | A | A | A | A | |
| Nom. Open Circuit Voltage | | | 370 | | | | |
| Input Power (W) | | | 842 | | | | |
| Power Factor(≥ %) | | | 90 | | | | |
| Regulation (± %) | Line Volts | | 10 | | | | |
| | Lamp Watts | | 10 | | | | |
| Min. Starting Temp | | | -20°F / -30°C | | | | |
| Ballast Dimensions (inches) | | A | 2.62 | | | | |
| | | B | 4.8 | | | | |
| Ballast Net Weight (lbs) | | | 17 | | | | |
| Lead Length (inches) | | | 12 | | | | |
| Capacitor | Capacitance (µF) | | 24 | | | | |
| | Min VAC Rating (V) | | 480 | | | | |
| Requires Ignitor Model | | | GMHR2 | | | | |
| Coil Material (Pri./ Sec.) | | | Cu / Al | | | | |

## 60 HZ. TEST PROCEDURES

| | | | | | | | |
|---|---|---|---|---|---|---|---|
| Short Circuit Current (A) | Secondary | Min | 4.0 | | | | |
| | | Max | 6.1 | | | | |
| | Input | Min | 1.8 | 1.1 | 0.9 | 0.7 | |
| | | Max | 5.5 | 3.5 | 3.0 | 2.5 | |
| Open Circuit Voltage (V) | | Min | 330 | | | | |
| | | Max | 410 | | | | |
| High Potential Test (V) | | 1 Minute | 2000 | | | | |
| | | 1 Second | 2400 | | | | |

## REFERENCE LAMP DATA

| | Test Range | ANSI Standard |
|---|---|---|
| Starting Current (A) | | 4.0 ~ 6.1 |
| CCF | 1.5 | ≤ 1.8 |
| OCV (V) | 330 ~ 410 | |
| Off Time (Sec.) | 2.2 | ≤ 2.4 |
| Peak Current (A) | 9.5 | ≤ 10.6 |
| Overshoot (V) | 62 | ≤ 100 |
| VSS (V) | 360 | ≥ 310 |

## OPTIONAL FEATURES

(ADD SUFFIX FOR OPTIONS)

| | |
|---|---|
| -WB | With welded bracket |
| -I | With ignitor |
| -DC | With dry film capacitor |
| -OC | With oil filled capacitor |
| -K | With distributor replacement kit (includes bracket, capacitor and ignitor as necessary) |

HATCH

**PART NO.**
# GC1000-ML5-CWCA

MAGNETIC

# MAGNETIC HID BALLAST

| | | | |
|---|---|---|---|
| **Ballast Type** | Magnetic Pulse Start | **Circuit Type** | CWA |
| **Lamp** | 1000W Metal Halide M141/M47 OR M166 (875W) | **Frequency** | 60Hz |

## PHYSICAL DIMENSIONS

4 1/4" x 6" Core

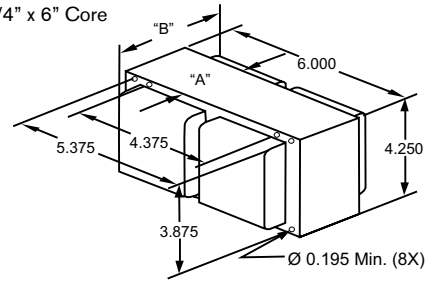


## WIRING DIAGRAM

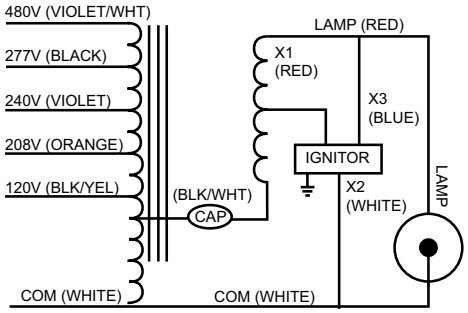


## CAPACITOR

Dry Type or Oil Oval

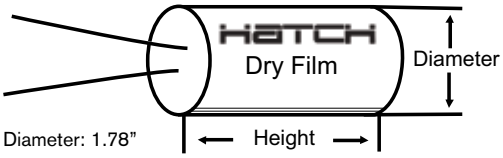


Diameter: 1.78"

Height: 3.15"

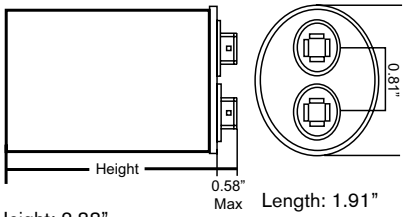


Height: 3.88"

Length: 1.91"

Width: 2.91"

## IGNITOR

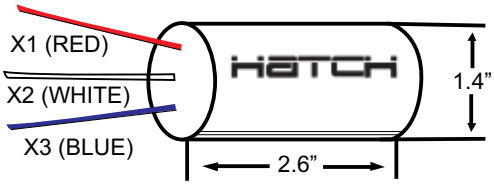


Pulse Height (kV): 3.0 ~ 5.0

Pulse Width (≥ µs): 4.0 @ 2.7kV

RoHS COMPLIANT

c UL us

**2 YEAR WARRANTY FROM DATE OF MANUFACTURE**

## ELECTRICAL SPECIFICATIONS

| | | Five Tap | | | | |
|---|---|---|---|---|---|---|
| **Input Voltage (V)** | | **120** | **208** | **240** | **277** | **480** |
| Line Current (A) | Operating | 8.8 | 5.1 | 4.5 | 3.9 | 2.3 |
| | Open Circuit | 3.5 | 2.1 | 1.8 | 1.6 | 0.9 |
| | Starting | 8.0 | 4.6 | 4.0 | 3.2 | 2.0 |
| Recommended Fuse | | 20 | 15 | 10 | 10 | 8 |
| Input Voltage At Lamp Dropout | | 65 | 115 | 130 | 150 | 265 |
| UL Class H 180°C Temp. Code | | C | B | B | A | B |
| UL Class N 200°C Temp. Code | | A | A | A | A | A |
| Nom. Open Circuit Voltage | | 413 | | | | |
| Input Power (W) | | 1070 | | | | |
| Power Factor(≥ %) | | 90 | | | | |
| Regulation (± %) | Line Volts | 10 | | | | |
| | Lamp Watts | 10 | | | | |
| Min. Starting Temp | | -20°F / -30°C | | | | |
| Ballast Dimensions (inches) | A | 3.25 | | | | |
| | B | 5.22 | | | | |
| Ballast Net Weight (lbs) | | 21.4 | | | | |
| Lead Length (inches) | | 12 | | | | |
| Capacitor | Capacitance (µF) | 24 | | | | |
| | Min VAC Rating (V) | 480 | | | | |
| | Capacitance (µF) | 22 (With 875 Watt Lamp) | | | | |
| | Min VAC Rating (V) | 480 | | | | |
| Requires Ignitor Model | | GHPS1K | | | | |
| Coil Material (Pri./ Sec.) | | Cu / Al | | | | |

## 60 HZ. TEST PROCEDURES

| | | | | | | | |
|---|---|---|---|---|---|---|---|
| Short Circuit Current (A) | Secondary | Min | 4.2 | | | | |
| | | Max | 6.5 | | | | |
| | Input | Min | 4.2 | 2.4 | 2.1 | 1.8 | 1.1 |
| | | Max | 12.6 | 7.2 | 6.3 | 5.4 | 3.2 |
| Open Circuit Voltage (V) | | Min | 340 | | | | |
| | | Max | 460 | | | | |
| High Potential Test (V) | | 1 Minute | 2000 | | | | |
| | | 1 Second | 2400 | | | | |

## REFERENCE LAMP DATA

| | Test Range | ANSI Standard |
|---|---|---|
| Starting Current (A) | | 4.2 ~ 6.5 |
| CCF | 1.4 | ≤ 1.8 |
| OCV (V) | 340 ~ 460 | |
| Off Time (Sec.) | 2.3 | ≤ 2.5 |
| Peak Current (A) | 10.6 | ≤ 11.5 |
| Overshoot (V) | 50 | ≤ 100 |
| VSS (V) | 378 | ≥ 370 |

## OPTIONAL FEATURES

(ADD SUFFIX FOR OPTIONS)

| | |
|---|---|
| -WB | With welded bracket |
| -I | With ignitor |
| -DC | With dry film capacitor |
| -OC | With oil filled capacitor |
| -K | With distributor replacement kit (includes bracket, capacitor and ignitor as necessary) |

**Part No.**

# GC1000-MLT-CWCA

MAGNETIC

## MAGNETIC HID BALLAST

| | | | |
|---|---|---|---|
| **Ballast Type** | Magnetic Probe Start | **Circuit Type** | CWA |
| **Lamp** | 1000W Metal Halide M141/M47 or M166 | **Frequency** | 60Hz |

## PHYSICAL DIMENSIONS

4 1/4" x 6" Core

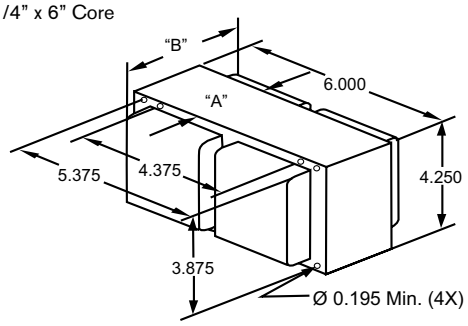


## WIRING DIAGRAM

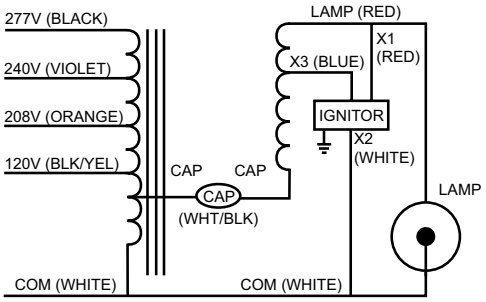


## CAPACITOR

Dry Type or Oil Oval

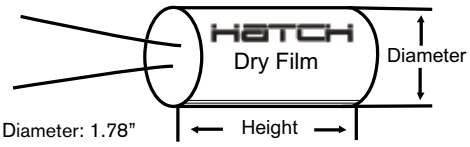


Diameter: 1.78"

Height: 3.15"

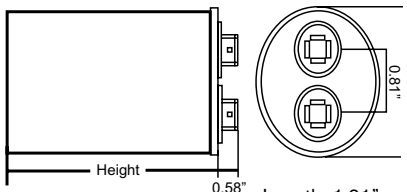


Height: 3.88"

Length: 1.91"

Width: 2.91"

## IGNITOR

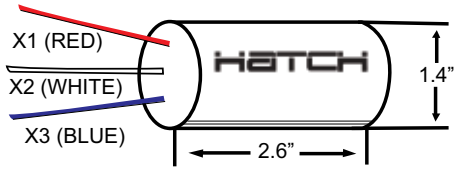


Pulse Height (kV): 3.0 ~ 5.0

Pulse Width (≥ µs): 2.5 @ 2.7kV

RoHS COMPLIANT

c UL us

**2 Year Warranty From Date of Manufacture**

## ELECTRICAL SPECIFICATIONS

| | | | Quad Tap | | | | |
|---|---|---|---|---|---|---|---|
| **Input Voltage (V)** | | | **120** | **208** | **240** | **277** | |
| Line Current (A) | Operating | | 9.2 | 5.3 | 4.6 | 4.0 | |
| | Open Circuit | | 6.0 | 3.6 | 3.1 | 2.8 | |
| | Starting | | 5.6 | 3.1 | 2.7 | 2.3 | |
| Recommended Fuse | | | 20 | 15 | 10 | 10 | |
| Input Voltage At Lamp Dropout | | | 65 | 115 | 130 | 150 | |
| UL Class H 180°C Temp. Code | | | C | B | B | B | |
| UL Class N 200°C Temp. Code | | | A | A | A | A | |
| Nom. Open Circuit Voltage | | | 404 | | | | |
| Input Power (W) | | | 1090 | | | | |
| Power Factor(≥ %) | | | 90 | | | | |
| Regulation (± %) | Line Volts | | 10 | | | | |
| | Lamp Watts | | 10 | | | | |
| Min. Starting Temp | | | -20°F / -30°C | | | | |
| Ballast Dimensions (inches) | | A | 3.01 | | | | |
| | | B | 5.05 | | | | |
| Ballast Net Weight (lbs) | | | 20.1 | | | | |
| Lead Length (inches) | | | 12 | | | | |
| Capacitor | Capacitance (µF) | | 24 | | | | |
| | Min VAC Rating (V) | | 480 | | | | |
| Requires Ignitor Model | | | GHPS1K | | | | |
| Coil Material (Pri./ Sec.) | | | Cu / Al | | | | |

## 60 HZ. TEST PROCEDURES

| | | | | | | | |
|---|---|---|---|---|---|---|---|
| Short Circuit Current (A) | Secondary | Min | 4.2 | | | | |
| | | Max | 6.5 | | | | |
| | Input | Min | 2.8 | 1.7 | 1.5 | 1.4 | |
| | | Max | 8.7 | 5.1 | 4.5 | 4.1 | |
| Open Circuit Voltage (V) | | Min | 340 | | | | |
| | | Max | 450 | | | | |
| High Potential Test (V) | | 1 Minute | 2000 | | | | |
| | | 1 Second | 2400 | | | | |

## REFERENCE LAMP DATA

| | Test Range | ANSI Standard |
|---|---|---|
| Starting Current (A) | | 4.2 ~ 6.5 |
| CCF | 1.4 | ≤ 1.8 |
| OCV (V) | 340 ~ 450 | |
| Off Time (Sec.) | 2.2 | ≤ 2.5 |
| Peak Current (A) | 10.2 | ≤ 11.5 |
| Overshoot (V) | 60 | ≤ 100 |
| VSS (V) | 378 | ≥ 370 |

## OPTIONAL FEATURES

(ADD SUFFIX FOR OPTIONS)

| | |
|---|---|
| -WB | With welded bracket |
| -I | With ignitor |
| -DC | With dry film capacitor |
| -OC | With oil filled capacitor |
| -K | With distributor replacement kit (includes bracket, capacitor and ignitor as necessary) |

HATCH

**PART NO.**
# GCE350-ML5-CWCA

MAGNETIC

# MAGNETIC HID BALLAST

| | | | |
|---|---|---|---|
| **Ballast Type** | Magnetic Pulse Start | **Circuit Type** | CWA |
| **Lamp** | 350W Metal Halide M131 | **Frequency** | 60Hz |

## PHYSICAL DIMENSIONS

4" x 4" Core

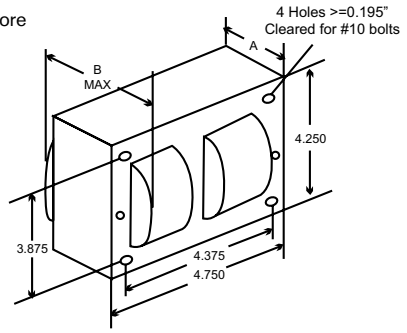


## WIRING DIAGRAM

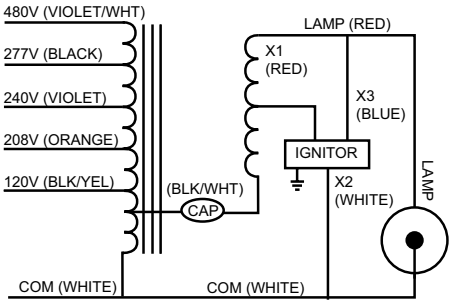


## CAPACITOR

Dry Type or Oil Oval

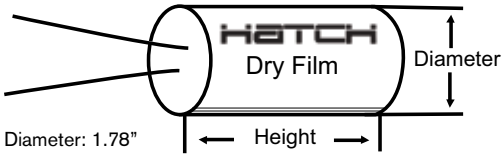


Diameter: 1.78"

Height: 3.15"

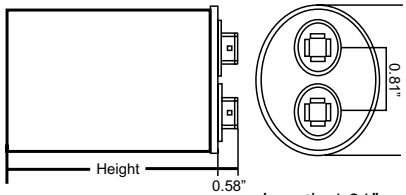


Height: 3.13"

Length: 1.91"

Width: 2.91"

## IGNITOR

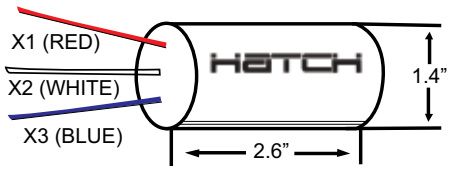


Pulse Height (kV): 3.0 ~ 4.0

Pulse Width (≥ µs): 1.3 @ 2.7kV

**2 YEAR WARRANTY FROM DATE OF MANUFACTURE**

## ELECTRICAL SPECIFICATIONS

| | | Five Tap | | | | |
|---|---|---|---|---|---|---|
| **Input Voltage (V)** | | **120** | **208** | **240** | **277** | **480** |
| Line Current (A) | Operating | 3.4 | 2.0 | 1.7 | 1.5 | 0.9 |
| | Open Circuit | 1.6 | 0.9 | 0.8 | 0.7 | 0.4 |
| | Starting | 2.0 | 1.2 | 1.0 | 0.9 | 0.5 |
| Recommended Fuse | | 10 | 7 | 5 | 5 | 3 |
| Input Voltage At Lamp Dropout | | 70 | 120 | 140 | 165 | 280 |
| UL Class H 180°C Temp. Code | | A | A | A | A | A |
| Nom. Open Circuit Voltage | | 266 | | | | |
| Input Power (W) | | 410 | | | | |
| Power Factor(≥ %) | | 90 | | | | |
| Regulation (± %) | Line Volts | 10 | | | | |
| | Lamp Watts | 10 | | | | |
| Min. Starting Temp | | -20°F / -30°C | | | | |
| Ballast Dimensions (inches) | A | 2.32 | | | | |
| | B | 4.40 | | | | |
| Ballast Net Weight (lbs) | | 12.2 | | | | |
| Lead Length (inches) | | 12 | | | | |
| Capacitor | Capacitance (µF) | 24 | | | | |
| | Min VAC Rating (V) | 330 | | | | |
| Requires Ignitor Model | | GMHR3 | | | | |
| Coil Material (Pri./ Sec.) | | Cu / Al | | | | |

## 60 HZ. TEST PROCEDURES

| | | | | | | | |
|---|---|---|---|---|---|---|---|
| Short Circuit Current (A) | Secondary | Min | 2.8 | | | | |
| | | Max | 4.2 | | | | |
| | Input | Min | 1.2 | 0.7 | 0.6 | 0.5 | 0.3 |
| | | Max | 3.5 | 2.0 | 1.8 | 1.5 | 0.9 |
| Open Circuit Voltage (V) | | Min | 254 | | | | |
| | | Max | 300 | | | | |
| High Potential Test (V) | | 1 Minute | 2000 | | | | |
| | | 1 Second | 2400 | | | | |

## REFERENCE LAMP DATA

| | Test Range | ANSI Standard |
|---|---|---|
| Starting Current (A) | | 2.8 ~ 4.2 |
| CCF | 1.5 | ≤ 1.8 |
| OCV (V) | 254 ~ 300 | |
| Off Time (Sec.) | 2.0 | ≤ 2.3 |
| Peak Current (A) | 6.9 | ≤ 8.0 |
| Overshoot (V) | -11 | ≤ 90 |
| VSS (V) | 276 | ≥ 270 |

## OPTIONAL FEATURES

(ADD SUFFIX FOR OPTIONS)

| | |
|---|---|
| -WB | With welded bracket |
| -I | With ignitor |
| -DC | With dry film capacitor |
| -OC | With oil filled capacitor |
| -K | With distributor replacement kit (includes bracket, capacitor and ignitor as necessary) |

HATCH

**PART NO.**
# GCE350-MLT-CWCA

MAGNETIC

# MAGNETIC HID BALLAST

| | | | |
|---|---|---|---|
| **Ballast Type** | Magnetic Pulse Start | **Circuit Type** | CWA |
| **Lamp** | 350W Metal Halide M131 | **Frequency** | 60Hz |

## ELECTRICAL SPECIFICATIONS

| | | | Quad Tap | | | | |
|---|---|---|---|---|---|---|---|
| **Input Voltage (V)** | | | **120** | **208** | **240** | **277** | |
| Line Current (A) | Operating | | 3.33 | 2.04 | 1.78 | 1.52 | |
| | Open Circuit | | 1.6 | 1.0 | 0.8 | 0.7 | |
| | Starting | | 3.1 | 1.6 | 1.5 | 1.2 | |
| Recommended Fuse | | | 12 | 6 | 6 | 5 | |
| Input Voltage At Lamp Dropout | | | 60 | 110 | 120 | 150 | |
| UL Class H 180°C Temp. Code | | | A | A | A | A | |
| Nom. Open Circuit Voltage | | | 268 | | | | |
| Input Power (W) | | | 400 | | | | |
| Power Factor(≥ %) | | | 90 | | | | |
| Regulation (± %) | Line Volts | | 10 | | | | |
| | Lamp Watts | | 10 | | | | |
| Min. Starting Temp | | | -20°F / -30°C | | | | |
| Ballast Dimensions (inches) | | A | 2.32 | | | | |
| | | B | 4.4 | | | | |
| Ballast Net Weight (lbs) | | | 11.8 | | | | |
| Lead Length (inches) | | | 12 | | | | |
| Capacitor | Capacitance (µF) | | 24 | | | | |
| | Min VAC Rating (V) | | 350 | | | | |
| Requires Ignitor Model | | | GMHR3 | | | | |
| Coil Material (Pri./ Sec.) | | | Cu / Al | | | | |

## 60 HZ. TEST PROCEDURES

| | | | | | | | |
|---|---|---|---|---|---|---|---|
| Short Circuit Current (A) | Secondary | Min | 2.8 | | | | |
| | | Max | 4.2 | | | | |
| | Input | Min | 1.5 | 1.0 | 0.8 | 0.6 | |
| | | Max | 4.5 | 3.0 | 2.5 | 2.0 | |
| Open Circuit Voltage (V) | | Min | 254 | | | | |
| | | Max | 300 | | | | |
| High Potential Test (V) | | 1 Minute | 1600 | | | | |
| | | 1 Second | 1900 | | | | |

## REFERENCE LAMP DATA

| | Test Range | ANSI Standard |
|---|---|---|
| Starting Current (A) | | 2.8 ~ 4.2 |
| CCF | 1.6 | ≤ 1.8 |
| OCV (V) | 254 ~ 300 | |
| Off Time (Sec.) | 2.2 | ≤ 2.3 |
| Peak Current (A) | 6.8 | ≤ 8.0 |
| Overshoot (V) | 30 | ≤ 90 |
| VSS (V) | 276 | ≥ 270 |

## OPTIONAL FEATURES

(ADD SUFFIX FOR OPTIONS)

| | |
|---|---|
| -WB | With welded bracket |
| -I | With ignitor |
| -DC | With dry film capacitor |
| -OC | With oil filled capacitor |
| -K | With distributor replacement kit (includes bracket, capacitor and ignitor as necessary) |

## PHYSICAL DIMENSIONS

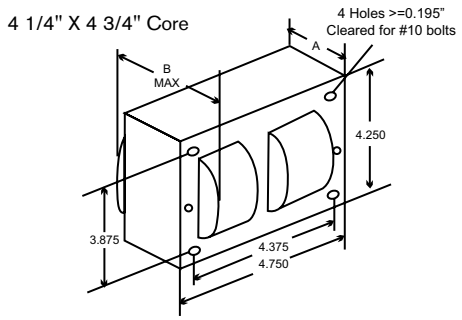


## WIRING DIAGRAM

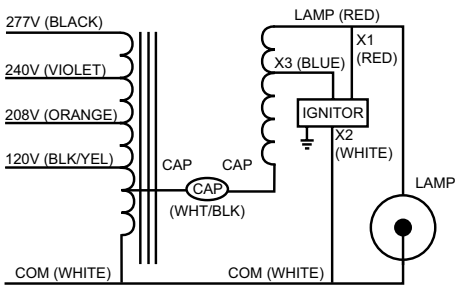


## CAPACITOR

Dry Type or Oil Oval

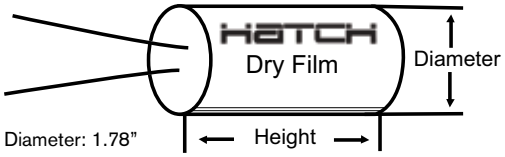


Diameter: 1.78"
Height: 3.15"

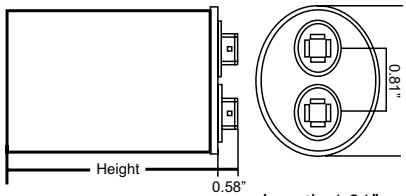


Height: 3.13"
Length: 1.91"
Width: 2.91"

## IGNITOR

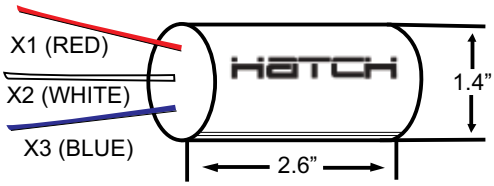


Pulse Height (kV): 3.0 ~ 4.0

Pulse Width (≥ µs): 1.3 @ 2.7kV

RoHS

c UL us

CE

**2 YEAR WARRANTY FROM DATE OF MANUFACTURE**

HATCH

**PART NO.**
# GCE400-ML5-CWCA

MAGNETIC

# MAGNETIC HID BALLAST

| | | | |
|---|---|---|---|
| **Ballast Type** | Magnetic Pulse Start | **Circuit Type** | CWA |
| **Lamp** | 400W Metal Halide M155/M135 | **Frequency** | 60Hz |

## PHYSICAL DIMENSIONS

4 1/4" x 4 3/4" Core

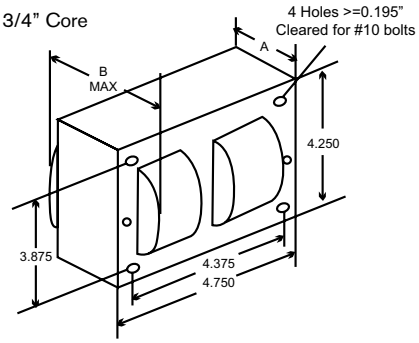


## WIRING DIAGRAM

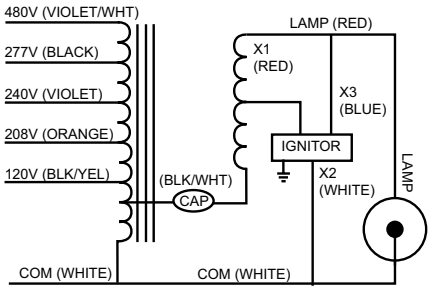


## CAPACITOR

Dry Type or Oil Oval

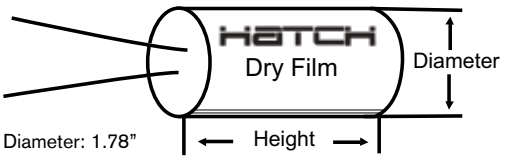


Diameter: 1.78"

Height: 3.15"

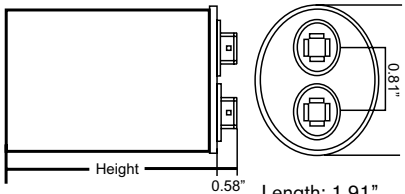


Height: 3.13"

Length: 1.91"

Width: 2.91"

## IGNITOR

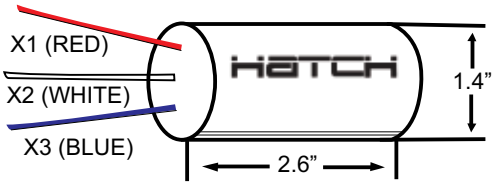


Pulse Height (kV): 3.0 ~ 4.0

Pulse Width (≥ µs): 1.3 @ 2.7kV

RoHS

c UL us

E

**2 YEAR WARRANTY FROM DATE OF MANUFACTURE**

## ELECTRICAL SPECIFICATIONS

| | | Quad Tap | | | | |
|---|---|---|---|---|---|---|
| **Input Voltage (V)** | | **120** | **208** | **240** | **277** | **480** |
| Line Current (A) | Operating | 3.81 | 2.15 | 1.92 | 1.67 | 0.93 |
| | Open Circuit | 1.7 | 1.0 | 0.9 | 0.8 | 0.4 |
| | Starting | 3.0 | 1.7 | 1.5 | 1.3 | 0.8 |
| Recommended Fuse | | 12 | 6 | 6 | 5 | 3 |
| Input Voltage At Lamp Dropout | | 65 | 115 | 130 | 155 | 240 |
| UL Class H 180°C Temp. Code | | B | B | B | A | C |
| UL Class N 200°C Temp. Code | | A | A | A | A | A |
| Nom. Open Circuit Voltage | | 258 | | | | |
| Input Power (W) | | 458 | | | | |
| Efficiency (%) | | 88 | | | | |
| Power Factor( ≥ %) | | 90 | | | | |
| Regulation (± %) | Line Volts | 10 | | | | |
| | Lamp Watts | 10 | | | | |
| Min. Starting Temp | | -20°F / -30°C | | | | |
| Ballast Dimensions (inches) | A | 2.32 | | | | |
| | B | 4.25 | | | | |
| Ballast Net Weight (lbs) | | 12.2 | | | | |
| Lead Length (inches) | | 12 | | | | |
| Capacitor | Capacitance (µF) | 26 | | | | |
| | Min VAC Rating (V) | 400 | | | | |
| Requires Ignitor Model | | GMHR3 | | | | |
| Coil Material (Pri./ Sec.) | | Cu / Al | | | | |

## 60 HZ. TEST PROCEDURES

| | | | | | | | |
|---|---|---|---|---|---|---|---|
| Short Circuit Current (A) | Secondary | Min | 3.2 | | | | |
| | | Max | 5.0 | | | | |
| | Input | Min | 1.4 | 0.8 | 0.7 | 0.6 | 0.4 |
| | | Max | 4.3 | 2.5 | 2.2 | 1.9 | 1.1 |
| Open Circuit Voltage (V) | | Min | 254 | | | | |
| | | Max | 290 | | | | |
| High Potential Test (V) | | 1 Minute | 1600 | | | | |
| | | 1 Second | 1900 | | | | |

## REFERENCE LAMP DATA

| | Test Range | ANSI Standard |
|---|---|---|
| Starting Current (A) | | 3.2 ~ 5.0 |
| CCF | 1.4 | ≤ 1.8 |
| OCV (V) | 254 ~ 290 | |
| Off Time (Sec.) | 2.1 | ≤ 2.3 |
| Peak Current (A) | 7.7 | ≤ 9.0 |
| Overshoot (V) | -21 | ≤ 100 |
| VSS (V) | 294 | ≥ 270 |

## OPTIONAL FEATURES

(ADD SUFFIX FOR OPTIONS)

| | |
|---|---|
| -WB | With welded bracket |
| -I | With ignitor |
| -DC | With dry film capacitor |
| -OC | With oil filled capacitor |
| -K | With distributor replacement kit (includes bracket, capacitor and ignitor as necessary) |

HATCH

**PART NO.**
# GCE400-MLT-CWAA

MAGNETIC

# MAGNETIC HID BALLAST

| | | | |
|---|---|---|---|
| **Ballast Type** | Magnetic Pulse Start | **Circuit Type** | CWA |
| **Lamp** | 400W Metal Halide M155/M135 | **Frequency** | 60Hz |

## PHYSICAL DIMENSIONS

4 1/4" x 4 3/4" Core

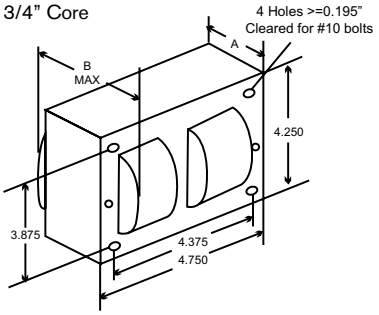


## WIRING DIAGRAM

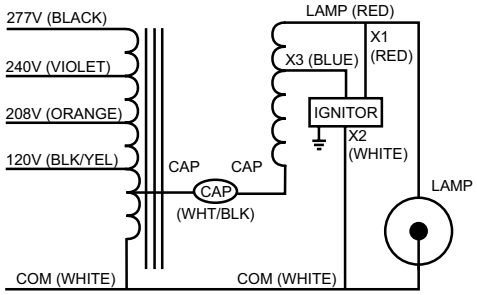


## CAPACITOR

Dry Typ or Oil Oval

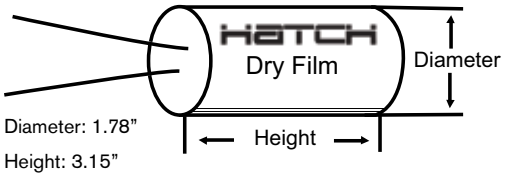


Diameter: 1.78"
Height: 3.15"

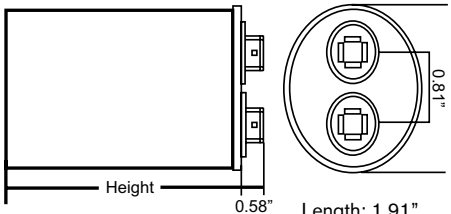


Height: 3.13"
Length: 1.91"
Width: 2.91"

## IGNITOR

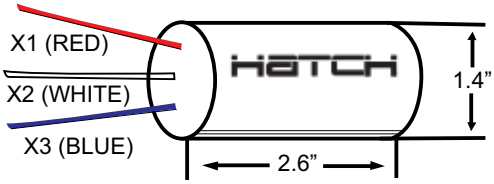


Pulse Height (kV): 3.0 ~ 4.0
Pulse Width (≥ µs): 1.3 @ 2.7kV

RoHS c UL us CE

**2 YEAR WARRANTY FROM DATE OF MANUFACTURE**

## ELECTRICAL SPECIFICATIONS

| | | Quad Tap | | | | |
|---|---|---|---|---|---|---|
| **Input Voltage (V)** | | **120** | **208** | **240** | **277** | |
| Line Current (A) | Operating | 4.0 | 2.3 | 2.0 | 1.75 | |
| | Open Circuit | 1.8 | 1.1 | 0.9 | 0.8 | |
| | Starting | 3.1 | 1.7 | 1.5 | 1.3 | |
| Recommended Fuse | | 12 | 6 | 6 | 5 | |
| Input Voltage At Lamp Dropout | | 60 | 110 | 120 | 150 | |
| UL Class H 180°C Temp. Code | | B | C | D | D | |
| UL Class N 200°C Temp. Code | | A | A | A | A | |
| Nom. Open Circuit Voltage | | 261 | | | | |
| Input Power (W) | | 460 | | | | |
| Efficiency (%) | | 88 | | | | |
| Power Factor( ≥ %) | | 90 | | | | |
| Regulation (± %) | Line Volts | 10 | | | | |
| | Lamp Watts | 10 | | | | |
| Min. Starting Temp | | -20°F / -30°C | | | | |
| Ballast Dimensions (inches) | A | 2.32" | | | | |
| | B | 4.2" | | | | |
| Ballast Net Weight (lbs) | | 11.2 | | | | |
| Lead Length (inches) | | 12 | | | | |
| Capacitor | Capacitance (µF) | 26 | | | | |
| | Min VAC Rating (V) | 400 | | | | |
| Requires Ignitor Model | | GMHR3 | | | | |
| Coil Material (Pri./ Sec.) | | Al / Al | | | | |

## 60 HZ. TEST PROCEDURES

| | | | | | | | |
|---|---|---|---|---|---|---|---|
| Short Circuit Current (A) | Secondary | Min | 3.2 | | | | |
| | | Max | 5.0 | | | | |
| | Input | Min | 1.5 | 0.8 | 0.7 | 0.6 | |
| | | Max | 4.4 | 2.5 | 2.2 | 1.9 | |
| Open Circuit Voltage (V) | | Min | 254 | | | | |
| | | Max | 290 | | | | |
| High Potential Test (V) | | 1 Minute | 1600 | | | | |
| | | 1 Second | 1900 | | | | |

## REFERENCE LAMP DATA

| | Test Range | ANSI Standard |
|---|---|---|
| Starting Current (A) | | 3.2 ~ 5.0 |
| CCF | 1.5 | ≤ 1.8 |
| OCV (V) | 254 ~ 290 | |
| Off Time (Sec.) | 2.1 | ≤ 2.3 |
| Peak Current (A) | 7.7 | ≤ 9.0 |
| Overshoot (V) | -21 | ≤ 100 |
| VSS (V) | 292 | ≥ 270 |

## OPTIONAL FEATURES

(ADD SUFFIX FOR OPTIONS)

| | |
|---|---|
| -WB | With welded bracket |
| -I | With ignitor |
| -DC | With dry film capacitor |
| -OC | With oil filled capacitor |
| -K | With distributor replacement kit (includes bracket, capacitor and ignitor as necessary) |

HATCH

PART NO.

# GFC50-AD-HXAA

MAGNETIC

## MAGNETIC HID BALLAST

| | | | |
|---|---|---|---|
| **Ballast Type** | Metal Halide | **Circuit Type** | HX-HPF |
| **Lamp** | 50W Metal Halide M110/M148 | **Frequency** | 60Hz |

## PHYSICAL DIMENSIONS

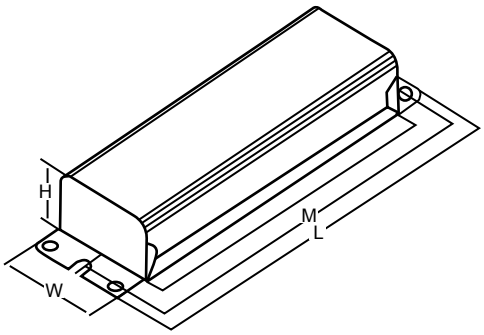


## WIRING DIAGRAM

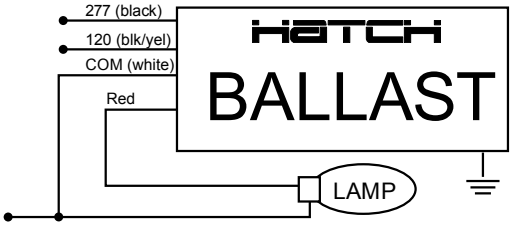


**Maximum Ballast To Lamp Distance 25 Ft.**

## ELECTRICAL SPECIFICATIONS

| | | Dual Tap | | | | |
|---|---|---|---|---|---|---|
| **Input Voltage (V)** | | **120** | **277** | | | |
| Line Current (A) | Operating | 0.55 | 0.24 | | | |
| | Open Circuit | 1.25 | 0.54 | | | |
| | Starting | 0.41 | 0.18 | | | |
| Recommended Fuse | | 5 | 2 | | | |
| Input Voltage At Lamp Dropout | | 85 | 200 | | | |
| UL Class A 105°C Temp. Code | | A | A | | | |
| Nom. Open Circuit Voltage | | 262 | | | | |
| Input Power (W) | | 64 | | | | |
| Power Factor(≥ %) | | 90 | | | | |
| Regulation (± %) | Line Volts | 5 | | | | |
| | Lamp Watts | 10 | | | | |
| Min. Starting Temp | | -20°F / -30°C | | | | |
| Case Dimensions (inches) | L | 11 3/4 | | | | |
| | W | 3 3/16 | | | | |
| | H | 2 5/8 | | | | |
| | M | 11 1/8 | | | | |
| Ballast Net Weight (lbs) | | 8.30 | | | | |
| Lead Length (inches) | | 12 | | | | |
| Capacitor | Capacitance (µF) | N/A Integral | | | | |
| | Min VAC Rating (V) | N/A Integral | | | | |
| Requires Ignitor Model | | N/A Integral | | | | |

## 60 HZ. TEST PROCEDURES

| | | | | | | | |
|---|---|---|---|---|---|---|---|
| Short Circuit Current (A) | Secondary | Min | 0.7 | | | | |
| | | Max | 1.1 | | | | |
| | Input | Min | 0.2 | 0.1 | | | |
| | | Max | 0.7 | 0.3 | | | |
| Open Circuit Voltage (V) | | Min | 235 | | | | |
| | | Max | 290 | | | | |
| High Potential Test (V) | | 1 Minute | 1600 | | | | |
| | | 1 Second | 2000 | | | | |

## REFERENCE LAMP DATA

| | Test Range | ANSI Standard |
|---|---|---|
| Starting Current (A) | | 0.7 ~ 1.1 |
| CCF | 1.6 | ≤1.8 |
| OCV (V) | 235 ~ 290 | |
| Off Time (Sec.) | | |
| Peak Current (A) | | |
| Overshoot (V) | | |
| VSS (V) | | |

## REMOTE MOUNTING

- The 120V input tap is also suitable for an incandescent auxilary lamp 50 watts maximum.
- Do not install insulation within 3 inches of ballast sides or above ballast in such a manner to entrap heat.
- SUITABLE FOR RECESSED USE

c UL us LISTED

RoHS COMPLIANT

c RU us

2 YEAR WARRANTY FROM DATE OF MANUFACTURE

HATCH

PART NO.
**GFC70-AD-HXCA**
MAGNETIC

# MAGNETIC HID BALLAST

| | | | |
|---|---|---|---|
| **Ballast Type** | Metal Halide | **Circuit Type** | HX-HPF |
| **Lamp** | 70W Metal Halide M98/M143 | **Frequency** | 60Hz |

## PHYSICAL DIMENSIONS

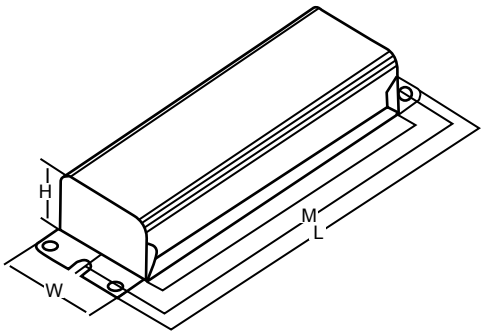


## WIRING DIAGRAM

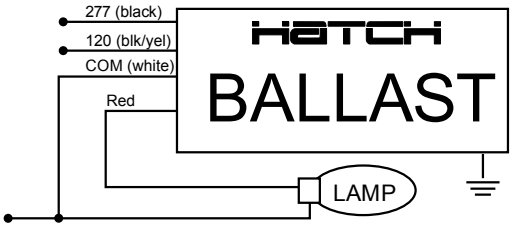


**Maximum Ballast To Lamp Distance 25 Ft.**

## ELECTRICAL SPECIFICATIONS

| | | Dual Tap | | | | |
|---|---|---|---|---|---|---|
| **Input Voltage (V)** | | **120** | **277** | | | |
| Line Current (A) | Operating | 0.76 | 0.34 | | | |
| | Open Circuit | 1.65 | 0.72 | | | |
| | Starting | 0.80 | 0.42 | | | |
| Recommended Fuse | | 6 | 2 | | | |
| Input Voltage At Lamp Dropout | | 90 | 200 | | | |
| UL Class A 105°C Temp. Code | | A | A | | | |
| Nom. Open Circuit Voltage | | 254 | | | | |
| Input Power (W) | | 85 | | | | |
| Power Factor(≥ %) | | 90 | | | | |
| Regulation (± %) | Line Volts | 5 | | | | |
| | Lamp Watts | 10 | | | | |
| Min. Starting Temp | | -20°F / -30°C | | | | |
| Case Dimensions (inches) | L | 11 3/4 | | | | |
| | W | 3 3/16 | | | | |
| | H | 2 5/8 | | | | |
| | M | 11 1/8 | | | | |
| Ballast Net Weight (lbs) | | 9.20 | | | | |
| Lead Length (inches) | | 12 | | | | |
| Capacitor | Capacitance (µF) | N/A Integral | | | | |
| | Min VAC Rating (V) | N/A Integral | | | | |
| Requires Ignitor Model | | N/A Integral | | | | |

## 60 HZ. TEST PROCEDURES

| | | | | | | | |
|---|---|---|---|---|---|---|---|
| Short Circuit Current (A) | Secondary | Min | 0.9 | | | | |
| | | Max | 1.5 | | | | |
| | Input | Min | 0.3 | 0.15 | | | |
| | | Max | 1.0 | 0.5 | | | |
| Open Circuit Voltage (V) | | Min | 235 | | | | |
| | | Max | 280 | | | | |
| High Potential Test (V) | | 1 Minute | 1600 | | | | |
| | | 1 Second | 1900 | | | | |

## REFERENCE LAMP DATA

| | Test Range | ANSI Standard |
|---|---|---|
| Starting Current (A) | | 0.9 ~ 1.5 |
| CCF | 1.5 | ≤1.8 |
| OCV (V) | 235 ~ 280 | |
| Off Time (Sec.) | | |
| Peak Current (A) | | |
| Overshoot (V) | | |
| VSS (V) | | |

## TECHNICAL INFORMATION

- The 120V input tap is also suitable for an incandescent auxilary lamp 70 watts maximum.
- Do not install insulation within 3 inches of ballast sides or above ballast in such a manner to entrap heat.
- SUITABLE FOR RECESSED USE

c UL us LISTED

RoHS COMPLIANT

c RU us

**2 YEAR WARRANTY FROM DATE OF MANUFACTURE**

HATCH

PART NO.
**GFC100-AD-HXCA**
MAGNETIC

# MAGNETIC HID BALLAST

| | | | |
|---|---|---|---|
| **Ballast Type** | Metal Halide | **Circuit Type** | HX-HPF |
| **Lamp** | 100W Metal Halide M90/M140 | **Frequency** | 60Hz |

## PHYSICAL DIMENSIONS

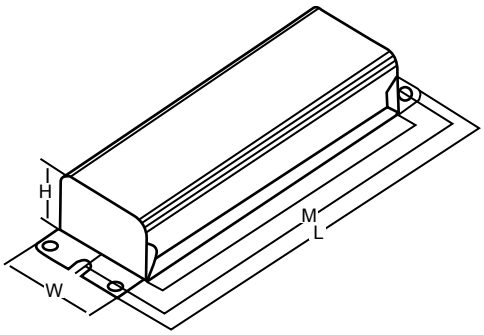


## WIRING DIAGRAM

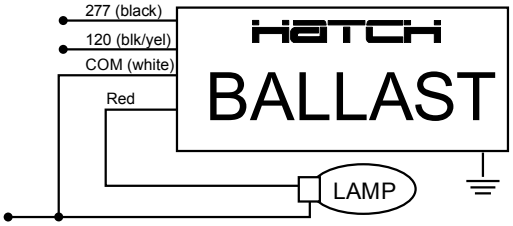


**Maximum Ballast To Lamp Distance 25 Ft.**

## ELECTRICAL SPECIFICATIONS

| | | Dual Tap | | | | |
|---|---|---|---|---|---|---|
| **Input Voltage (V)** | | **120** | **277** | | | |
| Line Current (A) | Operating | 1.1 | 0.46 | | | |
| | Open Circuit | 2.5 | 1.1 | | | |
| | Starting | 1.33 | 0.54 | | | |
| Recommended Fuse | | 6 | 3 | | | |
| Input Voltage At Lamp Dropout | | 90 | 205 | | | |
| UL Class A 105°C Temp. Code | | A | A | | | |
| Nom. Open Circuit Voltage | | 273 | | | | |
| Input Power (W) | | 121 | | | | |
| Power Factor(≥ %) | | 90 | | | | |
| Regulation (± %) | Line Volts | 5 | | | | |
| | Lamp Watts | 10 | | | | |
| Min. Starting Temp | | -20°F / -30°C | | | | |
| Case Dimensions (inches) | L | 11 3/4 | | | | |
| | W | 3 3/16 | | | | |
| | H | 2 5/8 | | | | |
| | M | 11 1/8 | | | | |
| Ballast Net Weight (lbs) | | 9.35 | | | | |
| Lead Length (inches) | | 12 | | | | |
| Capacitor | Capacitance (µF) | N/A Integral | | | | |
| | Min VAC Rating (V) | N/A Integral | | | | |
| Requires Ignitor Model | | N/A Integral | | | | |

## 60 HZ. TEST PROCEDURES

| | | | | | | | |
|---|---|---|---|---|---|---|---|
| Short Circuit Current (A) | Secondary | Min | 1.1 | | | | |
| | | Max | 1.6 | | | | |
| | Input | Min | 0.6 | 0.3 | | | |
| | | Max | 1.8 | 0.9 | | | |
| Open Circuit Voltage (V) | | Min | 235 | | | | |
| | | Max | 310 | | | | |
| High Potential Test (V) | | 1 Minute | 1600 | | | | |
| | | 1 Second | 1900 | | | | |

## REFERENCE LAMP DATA

| | Test Range | ANSI Standard |
|---|---|---|
| Starting Current (A) | | |
| CCF | 1.5 | ≤1.8 |
| OCV (V) | 235 ~ 310 | |
| Off Time (Sec.) | | |
| Peak Current (A) | | |
| Overshoot (V) | | |
| VSS (V) | | |

## TECHNICAL INFORMATION

- The 120V input tap is also suitable for an incandescent auxilary lamp 100 watts maximum.
- Do not install insulation within 3 inches of ballast sides or above ballast in such a manner to entrap heat.
- SUITABLE FOR RECESSED USE

c UL us LISTED

RoHS COMPLIANT

c RU us

**2 YEAR WARRANTY FROM DATE OF MANUFACTURE**

HATCH

PART NO.
GFC150-AD-HXCA

MAGNETIC

# MAGNETIC HID BALLAST

| | | | |
|---|---|---|---|
| **Ballast Type** | Metal Halide | **Circuit Type** | HX-HPF |
| **Lamp** | 150W Metal Halide M102/M142 | **Frequency** | 60Hz |

## PHYSICAL DIMENSIONS

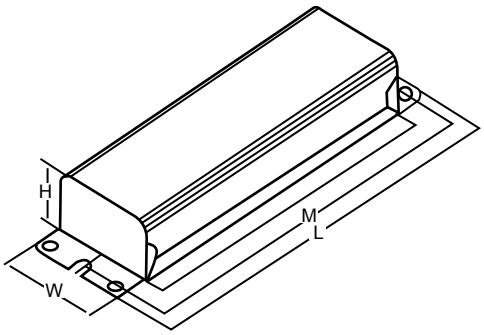


## WIRING DIAGRAM

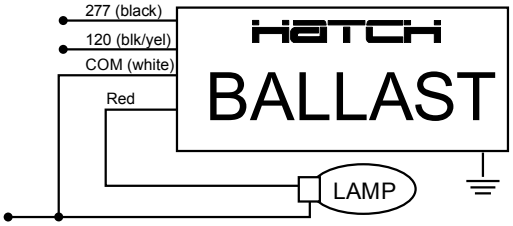


**Maximum Ballast To Lamp Distance 25 Ft.**

## ELECTRICAL SPECIFICATIONS

| | | Dual Tap | | | | |
|---|---|---|---|---|---|---|
| **Input Voltage (V)** | | **120** | **277** | | | |
| Line Current (A) | Operating | 154 | 0.66 | | | |
| | Open Circuit | 3.4 | 1.5 | | | |
| | Starting | 1.33 | 0.54 | | | |
| Recommended Fuse | | 8 | 4 | | | |
| Input Voltage At Lamp Dropout | | 90 | 205 | | | |
| UL Class A 105°C Temp. Code | | A | A | | | |
| Nom. Open Circuit Voltage | | 242 | | | | |
| Input Power (W) | | 170 | | | | |
| Power Factor(≥ %) | | 90 | | | | |
| Regulation (± %) | Line Volts | 5 | | | | |
| | Lamp Watts | 10 | | | | |
| Min. Starting Temp | | -20°F / -30°C | | | | |
| Case Dimensions (inches) | L | 11 3/4 | | | | |
| | W | 3 3/16 | | | | |
| | H | 2 5/8 | | | | |
| | M | 11 1/8 | | | | |
| Ballast Net Weight (lbs) | | 10.05 | | | | |
| Lead Length (inches) | | 12 | | | | |
| Capacitor | Capacitance (μF) | N/A Integral | | | | |
| | Min VAC Rating (V) | N/A Integral | | | | |
| Requires Ignitor Model | | N/A Integral | | | | |

## 60 HZ. TEST PROCEDURES

| | | | | | | | |
|---|---|---|---|---|---|---|---|
| Short Circuit Current (A) | Secondary | Min | 1.8 | | | | |
| | | Max | 3.0 | | | | |
| | Input | Min | 0.6 | 0.3 | | | |
| | | Max | 1.8 | 0.9 | | | |
| Open Circuit Voltage (V) | | Min | 235 | | | | |
| | | Max | 270 | | | | |
| High Potential Test (V) | | 1 Minute | 1500 | | | | |
| | | 1 Second | 1800 | | | | |

## REFERENCE LAMP DATA

| | Test Range | ANSI Standard |
|---|---|---|
| Starting Current (A) | | |
| CCF | 1.5 | ≤1.8 |
| OCV (V) | 235 ~ 270 | |
| Off Time (Sec.) | | |
| Peak Current (A) | | |
| Overshoot (V) | | |
| VSS (V) | | |

## TECHNICAL INFORMATION

- The 120V input tap is also suitable for an incandescent auxilary lamp 150 watts maximum.
- Do not install insulation within 3 inches of ballast sides or above ballast in such a manner to entrap heat.
- SUITABLE FOR RECESSED USE

c UL us LISTED  RoHS COMPLIANT  c UL us

**2 YEAR WARRANTY FROM DATE OF MANUFACTURE**

HATCH

PART NO.
**GFS50-AD-HXCA**
MAGNETIC

# MAGNETIC HID BALLAST

| | | | |
|---|---|---|---|
| **Ballast Type** | High Pressure Sodium | **Circuit Type** | HX-HPF |
| **Lamp** | 50W High Pressure Sodium S68 | **Frequency** | 60Hz |

## PHYSICAL DIMENSIONS

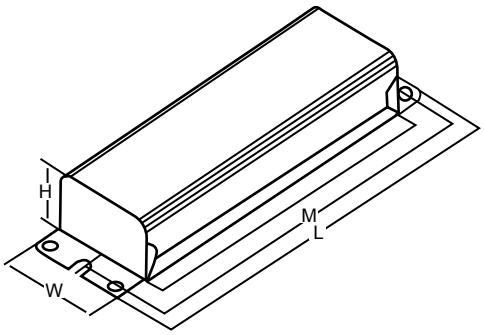


## WIRING DIAGRAM

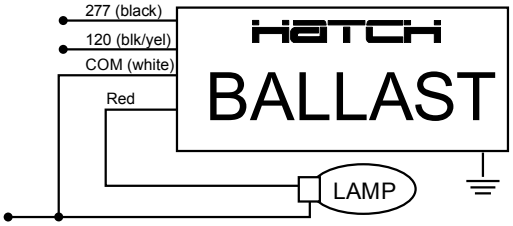


**Maximum Ballast To Lamp Distance 15 Ft.**

## ELECTRICAL SPECIFICATIONS

| | | Dual Tap | | | | |
|---|---|---|---|---|---|---|
| **Input Voltage (V)** | | **120** | **277** | | | |
| Line Current (A) | Operating | 0.58 | 0.35 | | | |
| | Open Circuit | 1.02 | 0.48 | | | |
| | Starting | 0.59 | 0.24 | | | |
| Recommended Fuse | | 3 | 2 | | | |
| Input Voltage At Lamp Dropout | | 90 | 210 | | | |
| UL Class A 105°C Temp. Code | | A | A | | | |
| Nom. Open Circuit Voltage | | 125 | | | | |
| Input Power (W) | | 66 | | | | |
| Power Factor(≥ %) | | 90 | | | | |
| Regulation (± %) | Line Volts | 5 | | | | |
| | Lamp Watts | 10 | | | | |
| Min. Starting Temp | | -20°F / -30°C | | | | |
| Case Dimensions (inches) | L | 11 3/4 | | | | |
| | W | 3 3/16 | | | | |
| | H | 2 5/8 | | | | |
| | M | 11 1/8 | | | | |
| Ballast Net Weight (lbs) | | 8.7 | | | | |
| Lead Length (inches) | | 12 | | | | |
| Capacitor | Capacitance (µF) | N/A Integral | | | | |
| | Min VAC Rating (V) | N/A Integral | | | | |
| Requires Ignitor Model | | N/A Integral | | | | |

## 60 HZ. TEST PROCEDURES

| | | | | | | | |
|---|---|---|---|---|---|---|---|
| Short Circuit Current (A) | Secondary | Min | 1.2 | | | | |
| | | Max | 1.9 | | | | |
| | Input | Min | 0.2 | 0.1 | | | |
| | | Max | 0.7 | 0.4 | | | |
| Open Circuit Voltage (V) | | Min | 110 | | | | |
| | | Max | 140 | | | | |
| High Potential Test (V) | | 1 Minute | 1300 | | | | |
| | | 1 Second | 1600 | | | | |

## REFERENCE LAMP DATA

| | Test Range | ANSI Standard |
|---|---|---|
| Starting Current (A) | | 1.2~1.9 |
| CCF | 1.6 | ≤1.8 |
| OCV (V) | 110 ~ 140 | |
| Off Time (Sec.) | | |
| Peak Current (A) | | |
| Overshoot (V) | | |
| VSS (V) | | |

## TECHNICAL INFORMATION

- The 120V input tap is also suitable for an incandescent auxilary lamp 50 watts maximum.
- Do not install insulation within 3 inches of ballast sides or above ballast in such a manner to entrap heat.
- SUITABLE FOR RECESSED USE

c UL us LISTED

RoHS COMPLIANT

c RU us

**2 YEAR WARRANTY FROM DATE OF MANUFACTURE**

HATCH

**PART NO.**
**GFS70-AD-HXCA**
MAGNETIC

# MAGNETIC HID BALLAST

| | | | |
|---|---|---|---|
| **Ballast Type** | High Pressure Sodium | **Circuit Type** | HX-HPF |
| **Lamp** | 70W High Pressure Sodium S62 | **Frequency** | 60Hz |

## PHYSICAL DIMENSIONS

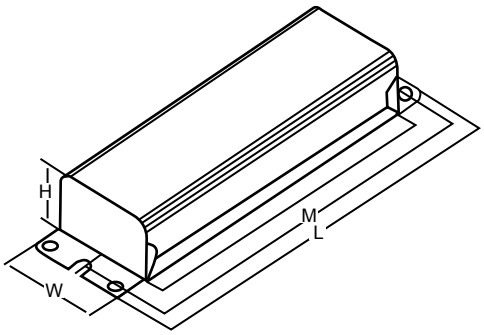


## WIRING DIAGRAM

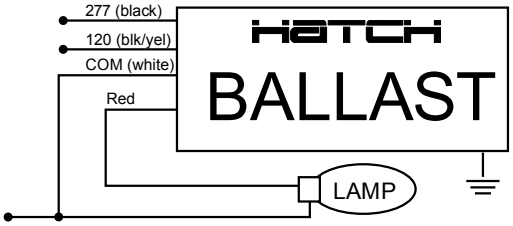


**Maximum Ballast To Lamp Distance 15 Ft.**

## ELECTRICAL SPECIFICATIONS

| | | Dual Tap | | | | |
|---|---|---|---|---|---|---|
| **Input Voltage (V)** | | **120** | **277** | | | |
| Line Current (A) | Operating | 0.78 | 0.34 | | | |
| | Open Circuit | 1.44 | 0.64 | | | |
| | Starting | 0.78 | 0.38 | | | |
| Recommended Fuse | | 4 | 2 | | | |
| Input Voltage At Lamp Dropout | | 90 | 210 | | | |
| UL Class A 105°C Temp. Code | | A | A | | | |
| Nom. Open Circuit Voltage | | 125 | | | | |
| Input Power (W) | | 91 | | | | |
| Power Factor(≥ %) | | 90 | | | | |
| Regulation (± %) | Line Volts | 5 | | | | |
| | Lamp Watts | 10 | | | | |
| Min. Starting Temp | | -20°F / -30°C | | | | |
| Case Dimensions (inches) | L | 11 3/4 | | | | |
| | W | 3 3/16 | | | | |
| | H | 2 5/8 | | | | |
| | M | 11 1/8 | | | | |
| Ballast Net Weight (lbs) | | 9.40 | | | | |
| Lead Length (inches) | | 12 | | | | |
| Capacitor | Capacitance (µF) | N/A Integral | | | | |
| | Min VAC Rating (V) | N/A Integral | | | | |
| Requires Ignitor Model | | N/A Integral | | | | |

## 60 HZ. TEST PROCEDURES

| | | | | | | | |
|---|---|---|---|---|---|---|---|
| Short Circuit Current (A) | Secondary | Min | 1.6 | | | | |
| | | Max | 2.4 | | | | |
| | Input | Min | 0.3 | 0.1 | | | |
| | | Max | 1.0 | 0.5 | | | |
| Open Circuit Voltage (V) | | Min | 110 | | | | |
| | | Max | 140 | | | | |
| High Potential Test (V) | | 1 Minute | 1300 | | | | |
| | | 1 Second | 1600 | | | | |

## REFERENCE LAMP DATA

| | Test Range | ANSI Standard |
|---|---|---|
| Starting Current (A) | | 1.6~2.4 |
| CCF | 1.6 | ≤1.8 |
| OCV (V) | 110 ~ 140 | |
| Off Time (Sec.) | | |
| Peak Current (A) | | |
| Overshoot (V) | | |
| VSS (V) | | |

## TECHNICAL INFORMATION

- The 120V input tap is also suitable for an incandescent auxilary lamp 70 watts maximum.
- Do not install insulation within 3 inches of ballast sides or above ballast in such a manner to entrap heat.
- SUITABLE FOR RECESSED USE

c UL us LISTED

RoHS COMPLIANT

c RU us

**2 YEAR WARRANTY FROM DATE OF MANUFACTURE**

HATCH

PART NO.
**GFS100-AD-HXCA** MAGNETIC

# MAGNETIC HID BALLAST

| | | | |
|---|---|---|---|
| **Ballast Type** | High Pressure Sodium | **Circuit Type** | HX-HPF |
| **Lamp** | 100W High Pressure Sodium S54 | **Frequency** | 60 |

## PHYSICAL DIMENSIONS

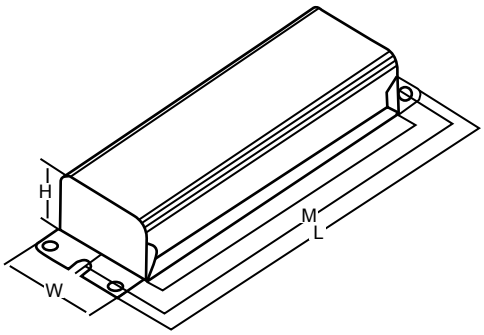


## WIRING DIAGRAM

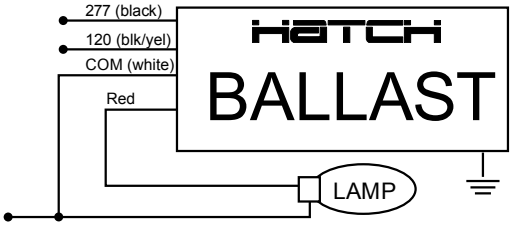


**Maximum Ballast To Lamp Distance 15 Ft.**

## ELECTRICAL SPECIFICATIONS

| | | Dual Tap | | | | |
|---|---|---|---|---|---|---|
| **Input Voltage (V)** | | **120** | **277** | | | |
| Line Current (A) | Operating | 1.10 | 0.50 | | | |
| | Open Circuit | 1.86 | 0.88 | | | |
| | Starting | 1.02 | 0.53 | | | |
| Recommended Fuse | | 6 | 3 | | | |
| Input Voltage At Lamp Dropout | | 95 | 220 | | | |
| UL Class A 105°C Temp. Code | | A | A | | | |
| Nom. Open Circuit Voltage | | 120 | | | | |
| Input Power (W) | | 123 | | | | |
| Power Factor(≥ %) | | 90 | | | | |
| Regulation (± %) | Line Volts | 5 | | | | |
| | Lamp Watts | 10 | | | | |
| Min. Starting Temp | | -20°F / -30°C | | | | |
| Case Dimensions (inches) | L | 11 3/4 | | | | |
| | W | 3 3/16 | | | | |
| | H | 2 5/8 | | | | |
| | M | 11 1/8 | | | | |
| Ballast Net Weight (lbs) | | 9.70 | | | | |
| Lead Length (inches) | | 12 | | | | |
| Capacitor | Capacitance (µF) | N/A Integral | | | | |
| | Min VAC Rating (V) | N/A Integral | | | | |
| Requires Ignitor Model | | N/A Integral | | | | |

## 60 HZ. TEST PROCEDURES

| | | | | | | | |
|---|---|---|---|---|---|---|---|
| Short Circuit Current (A) | Secondary | Min | 2.1 | | | | |
| | | Max | 3.2 | | | | |
| | Input | Min | 0.5 | 0.2 | | | |
| | | Max | 1.6 | 0.8 | | | |
| Open Circuit Voltage (V) | | Min | 110 | | | | |
| | | Max | 140 | | | | |
| High Potential Test (V) | | 1 Minute | 1300 | | | | |
| | | 1 Second | 1600 | | | | |

## REFERENCE LAMP DATA

| | Test Range | ANSI Standard |
|---|---|---|
| Starting Current (A) | | 2.1~3.2 |
| CCF | 1.6 | ≤1.8 |
| OCV (V) | 110 ~ 140 | |
| Off Time (Sec.) | | |
| Peak Current (A) | | |
| Overshoot (V) | | |
| VSS (V) | | |

## TECHNICAL INFORMATION

- The 120V input tap is also suitable for an incandescent auxilary lamp 100 watts maximum.
- Do not install insulation within 3 inches of ballast sides or above ballast in such a manner to entrap heat.
- SUITABLE FOR RECESSED USE

c UL us LISTED

RoHS COMPLIANT

c RU us

**2 YEAR WARRANTY FROM DATE OF MANUFACTURE**

HATCH

PART NO.
GFS150-AD-HXCA

MAGNETIC

# MAGNETIC HID BALLAST

| | | | |
|---|---|---|---|
| **Ballast Type** | High Pressure Sodium | **Circuit Type** | HX-HPF |
| **Lamp** | 150W High Pressure Sodium S55 | **Frequency** | 60 |

## PHYSICAL DIMENSIONS

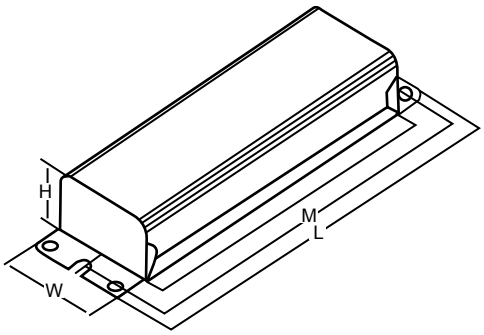


## WIRING DIAGRAM

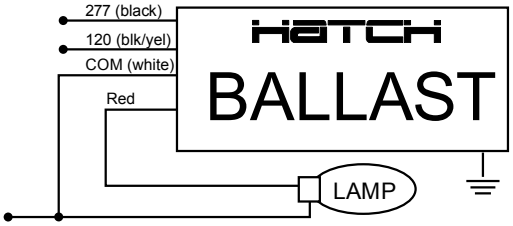


**Maximum Ballast To Lamp Distance 15 Ft.**

## ELECTRICAL SPECIFICATIONS

| | | Dual Tap | | | | |
|---|---|---|---|---|---|---|
| **Input Voltage (V)** | | **120** | **277** | | | |
| Line Current (A) | Operating | 1.5 | 0.70 | | | |
| | Open Circuit | 1.50 | 1.20 | | | |
| | Starting | 2.60 | 0.83 | | | |
| Recommended Fuse | | 8 | 4 | | | |
| Input Voltage At Lamp Dropout | | 90 | 200 | | | |
| UL Class A 105°C Temp. Code | | A | A | | | |
| Nom. Open Circuit Voltage | | 120 | | | | |
| Input Power (W) | | 173 | | | | |
| Power Factor(≥ %) | | 90 | | | | |
| Regulation (± %) | Line Volts | 5 | | | | |
| | Lamp Watts | 10 | | | | |
| Min. Starting Temp | | -20°F / -30°C | | | | |
| Case Dimensions (inches) | L | 11 3/4 | | | | |
| | W | 3 3/16 | | | | |
| | H | 2 5/8 | | | | |
| | M | 11 1/8 | | | | |
| Ballast Net Weight (lbs) | | 11.0 | | | | |
| Lead Length (inches) | | 12 | | | | |
| Capacitor | Capacitance (μF) | N/A Integral | | | | |
| | Min VAC Rating (V) | N/A Integral | | | | |
| Requires Ignitor Model | | N/A Integral | | | | |

## 60 HZ. TEST PROCEDURES

| | | | | | | | |
|---|---|---|---|---|---|---|---|
| Short Circuit Current (A) | Secondary | Min | 3.5 | | | | |
| | | Max | 5.4 | | | | |
| | Input | Min | 0.8 | 0.4 | | | |
| | | Max | 2.6 | 1.3 | | | |
| Open Circuit Voltage (V) | | Min | 110 | | | | |
| | | Max | 140 | | | | |
| High Potential Test (V) | | 1 Minute | 1300 | | | | |
| | | 1 Second | 1600 | | | | |

## REFERENCE LAMP DATA

| | Test Range | ANSI Standard |
|---|---|---|
| Starting Current (A) | | 3.5~5.4 |
| CCF | 1.5 | ≤1.8 |
| OCV (V) | 110 ~ 140 | |
| Off Time (Sec.) | | |
| Peak Current (A) | | |
| Overshoot (V) | | |
| VSS (V) | | |

## TECHNICAL INFORMATION

- The 120V input tap is also suitable for an incandescent auxilary lamp 150 watts maximum.
- Do not install insulation within 3 inches of ballast sides or above ballast in such a manner to entrap heat.
- SUITABLE FOR RECESSED USE

c UL us LISTED  RoHS COMPLIANT  c UL us

**2 YEAR WARRANTY FROM DATE OF MANUFACTURE**

**Part No.**

# GM175-ML5-CWCA

MAGNETIC

## MAGNETIC HID BALLAST

| | | | |
|---|---|---|---|
| **Ballast Type** | Magnetic Probe Start | **Circuit Type** | CWA |
| **Lamp** | 175W Metal Halide M57/M107(150W) | **Frequency** | 60Hz |

## PHYSICAL DIMENSIONS

3" x 4" Core

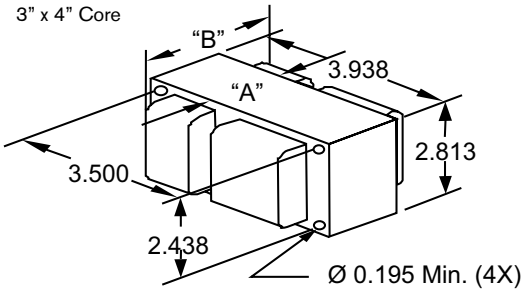


## WIRING DIAGRAM

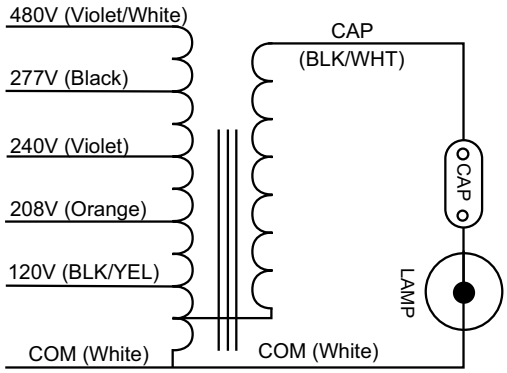


## CAPACITOR

Dry Typ or Oil Oval

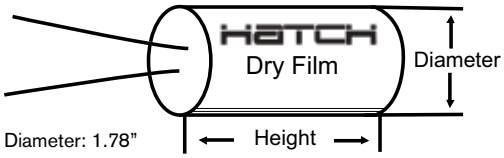


Diameter: 1.78"

Height: 3.15"

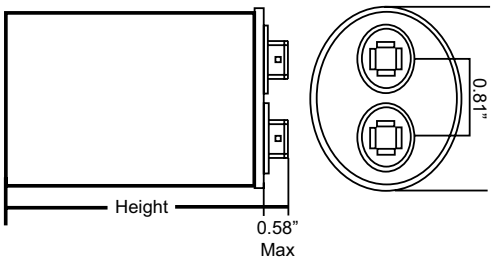


Height: 2.75"  Length: 1.91"

Width: 2.91"

RoHS COMPLIANT

c UL us

**2 Year Warranty From Date of Manufacture**

## ELECTRICAL SPECIFICATIONS

| | | Five Tap | | | | |
|---|---|---|---|---|---|---|
| **Input Voltage (V)** | | **120** | **208** | **240** | **277** | **480** |
| Line Current (A) | Operating | 1.9 | 1.1 | 0.9 | 0.8 | 0.5 |
| | Open Circuit | 1.6 | 0.9 | 0.8 | 0.7 | 0.4 |
| | Starting | 1.3 | 0.7 | 0.6 | 0.5 | 0.3 |
| Recommended Fuse | | 10 | 5 | 5 | 3 | 2 |
| Input Voltage At Lamp Dropout | | 70 | 115 | 125 | 155 | 265 |
| UL Class H 180°C Temp. Code | | C | B | B | B | A |
| UL Class N 200°C Temp. Code | | A | A | A | A | A |
| Nom. Open Circuit Voltage | | 302 | | | | |
| Input Power (W) | | 210 | | | | |
| Power Factor( ≥%) | | 90 | | | | |
| Regulation (± %) | Line Volts | 10 | | | | |
| | Lamp Watts | 10 | | | | |
| Min. Starting Temp | | -20°F / -30°C | | | | |
| Ballast Dimensions (inches) | A | 2.44 | | | | |
| | B | 4.10 | | | | |
| Ballast Net Weight (lbs) | | 6.9 | | | | |
| Lead Length (inches) | | 12 | | | | |
| Capacitor | Capacitance (µF) | 10 | | | | |
| | Min VAC Rating (V) | 400 | | | | |
| Coil Material (Pri./ Sec.) | | Cu / Al | | | | |

## 60 HZ. TEST PROCEDURES

| | | | | | | | |
|---|---|---|---|---|---|---|---|
| Short Circuit Current (A) | Secondary | Min | 1.5 | | | | |
| | | Max | 2.5 | | | | |
| | Input | Min | 0.6 | 0.4 | 0.3 | 0.3 | 0.2 |
| | | Max | 1.8 | 1.1 | 0.9 | 0.8 | 0.7 |
| Open Circuit Voltage (V) | | Min | 250 | | | | |
| | | Max | 340 | | | | |
| High Potential Test (V) | | 1 Minute | 2000 | | | | |
| | | 1 Second | 2400 | | | | |

## REFERENCE LAMP DATA

| | Test Range | ANSI Standard |
|---|---|---|
| Starting Current (A) | | 1.5 ~ 2.5 |
| CCF | 1.5 | ≤1.8 |
| OCV (V) | 250 ~ 340 | |
| di/dt (A/ms) | 1.1 | ≥ 0.65 |
| Off Time (ms.) | 1.8 | ≤2.75 |
| Peak Current (A) | 3.4 | ≤3.8 |
| Overshoot (mA) | -12 | ≤45 |
| VSS (V) | 269 | |

## OPTIONAL FEATURES

(ADD SUFFIX FOR OPTIONS)

| | |
|---|---|
| -WB | With welded bracket |
| -I | With ignitor |
| -DC | With dry film capacitor |
| -OC | With oil filled capacitor |
| -K | With distributor replacement kit (includes bracket, capacitor and ignitor as necessary) |

HATCH

**PART NO.**
# GM175-MLT-CWCA

MAGNETIC

# MAGNETIC HID BALLAST

| | | | |
|---|---|---|---|
| **Ballast Type** | Magnetic Probe Start | **Circuit Type** | CWA |
| **Lamp** | 175W Metal Halide M57 or M107 (150W) | **Frequency** | 60Hz |

## PHYSICAL DIMENSIONS

3" x 4" Core

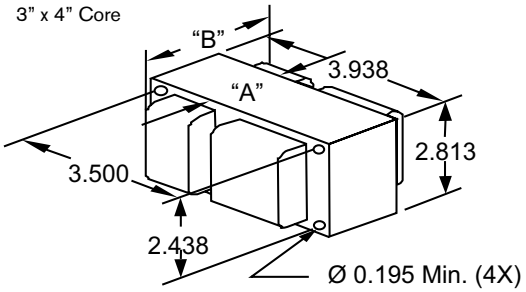


## WIRING DIAGRAM

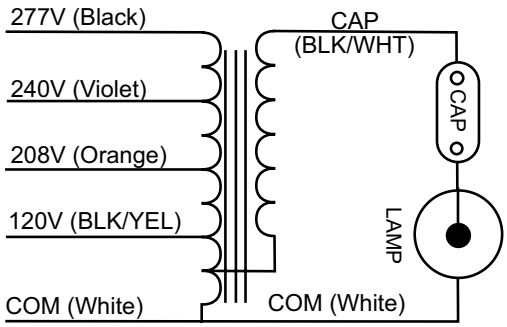


## CAPACITOR

Dry Type or Oil Oval

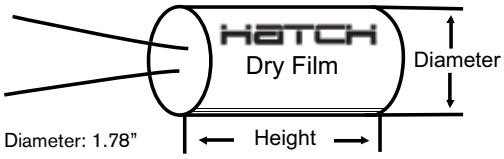


Diameter: 1.78"
Height: 3.15"

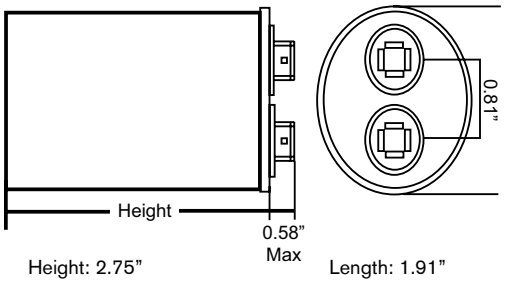


Height: 2.75"

Length: 1.91"
Width: 2.91"

RoHS COMPLIANT

c UL us

**2 YEAR WARRANTY FROM DATE OF MANUFACTURE**

## ELECTRICAL SPECIFICATIONS

| | | | Quad Tap | | | | |
|---|---|---|---|---|---|---|---|
| **Input Voltage (V)** | | | **120** | **208** | **240** | **277** | |
| Line Current (A) | Operating | | 1.9 | 1.1 | 0.95 | 0.82 | |
| | Open Circuit | | 1.6 | 0.9 | 0.8 | 0.7 | |
| | Starting | | 1.3 | 0.7 | 0.6 | 0.5 | |
| Recommended Fuse | | | 10 | 5 | 4 | 3 | |
| Input Voltage At Lamp Dropout | | | 65 | 115 | 128 | 150 | |
| UL Class H 180°C Temp. Code | | | B | C | C | C | |
| Nom. Open Circuit Voltage | | | 300 | | | | |
| Input Power (W) | | | 207 | | | | |
| Power Factor(≥%) | | | 90 | | | | |
| Regulation (± %) | Line Volts | | 10 | | | | |
| | Lamp Watts | | 10 | | | | |
| Min. Starting Temp | | | -20°F / -30°C | | | | |
| Ballast Dimensions (inches) | | A | 2.44 | | | | |
| | | B | 3.8 | | | | |
| Ballast Net Weight (lbs) | | | 6.8 | | | | |
| Lead Length (inches) | | | 12 | | | | |
| Capacitor | Capacitance (µF) | | 10 | | | | |
| | Min VAC Rating (V) | | 400 | | | | |
| Requires Ignitor Model | | | N/A | | | | |
| Coil Material (Pri./ Sec.) | | | Cu / Al | | | | |

## 60 HZ. TEST PROCEDURES

| | | | | | | | |
|---|---|---|---|---|---|---|---|
| Short Circuit Current (A) | Secondary | Min | 1.5 | | | | |
| | | Max | 2.5 | | | | |
| | Input | Min | 0.6 | 0.4 | 0.3 | 0.3 | |
| | | Max | 1.8 | 1.2 | 1.0 | 0.9 | |
| Open Circuit Voltage (V) | | Min | 250 | | | | |
| | | Max | 330 | | | | |
| High Potential Test (V) | | 1 Minute | 2000 | | | | |
| | | 1 Second | 2400 | | | | |

## REFERENCE LAMP DATA

| | Test Range | ANSI Standard |
|---|---|---|
| Starting Current (A) | | 1.5 ~ 2.5 |
| CCF | 1.6 | ≤1.8 |
| OCV (V) | 250 ~ 330 | |
| di/dt (A/ms) | 1.1 | ≥ 0.65 |
| Off Time (Sec.) | 1.8 | ≤2.75 |
| Peak Current (A) | 3.3 | ≤3.8 |
| Overshoot (V) | -14 | ≤45 |
| VSS (V) | 269 | |

## OPTIONAL FEATURES

(ADD SUFFIX FOR OPTIONS)

| | |
|---|---|
| -WB | With welded bracket |
| -I | With ignitor |
| -DC | With dry film capacitor |
| -OC | With oil filled capacitor |
| -K | With distributor replacement kit (includes bracket, capacitor and ignitor as necessary) |

HATCH

**PART NO.**
# GM250-ML5-CWCA

MAGNETIC

# MAGNETIC HID BALLAST

| | | | |
|---|---|---|---|
| **Ballast Type** | Magnetic Probe Start | **Circuit Type** | CWA |
| **Lamp** | 250W Metal Halide M58 | **Frequency** | 60Hz |

## PHYSICAL DIMENSIONS

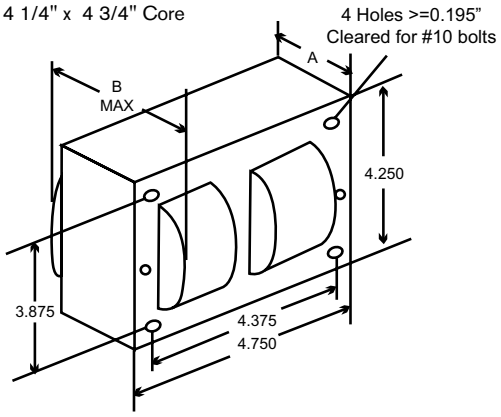


## WIRING DIAGRAM

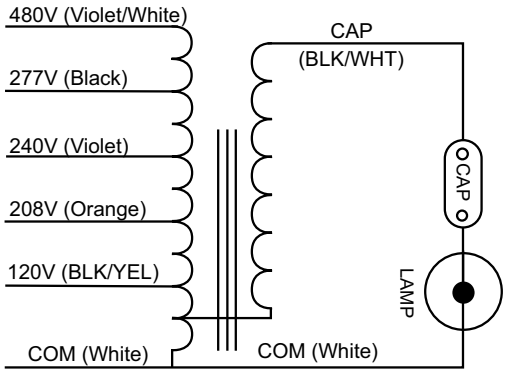


## CAPACITOR

Dry Type or Oil Oval

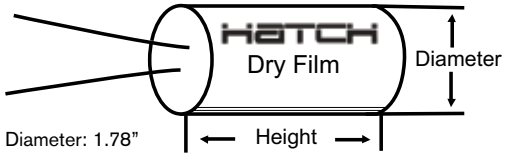


Diameter: 1.78"
Height: 3.15"

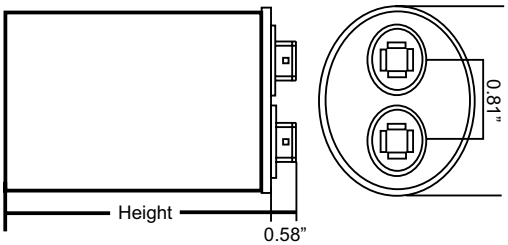


Height: 2.75"
Length: 1.91"
Width: 2.91"

RoHS COMPLIANT

c UL us

**2 YEAR WARRANTY FROM DATE OF MANUFACTURE**

## ELECTRICAL SPECIFICATIONS

| | | Five Tap | | | | |
|---|---|---|---|---|---|---|
| **Input Voltage (V)** | | **120** | **208** | **240** | **277** | **480** |
| Line Current (A) | Operating | 2.5 | 1.45 | 1.25 | 1.10 | 0.65 |
| | Open Circuit | 2.9 | 1.7 | 1.6 | 1.2 | 0.8 |
| | Starting | 1.5 | 0.9 | 0.7 | 0.6 | 0.4 |
| Recommended Fuse | | 10 | 6 | 5 | 5 | 3 |
| Input Voltage At Lamp Dropout | | 65 | 110 | 130 | 150 | 240 |
| UL Class H 180°C Temp. Code | | A | A | A | A | A |
| Nom. Open Circuit Voltage | | 307 | | | | |
| Input Power (W) | | 289 | | | | |
| Power Factor(≥ %) | | 90 | | | | |
| Regulation (± %) | Line Volts | 10 | | | | |
| | Lamp Watts | 10 | | | | |
| Min. Starting Temp | | -20°F / -30°C | | | | |
| Ballast Dimensions (inches) | A | 1.85 | | | | |
| | B | 3.6 | | | | |
| Ballast Net Weight (lbs) | | 10.2 | | | | |
| Lead Length (inches) | | 12 | | | | |
| Capacitor | Capacitance (µF) | 15 | | | | |
| | Min VAC Rating (V) | 400 | | | | |
| Requires Ignitor Model | | N/A | | | | |
| Coil Material (Pri./ Sec.) | | Cu / Al | | | | |

## 60 HZ. TEST PROCEDURES

| | | | | | | | |
|---|---|---|---|---|---|---|---|
| Short Circuit Current (A) | Secondary | Min | 2.1 | | | | |
| | | Max | 3.5 | | | | |
| | Input | Min | 0.9 | 0.5 | 0.4 | 0.4 | 0.2 |
| | | Max | 2.7 | 1.5 | 1.3 | 1.1 | 0.7 |
| Open Circuit Voltage (V) | | Min | 270 | | | | |
| | | Max | 340 | | | | |
| High Potential Test (V) | | 1 Minute | 2000 | | | | |
| | | 1 Second | 2400 | | | | |

## REFERENCE LAMP DATA

| | Test Range | ANSI Standard |
|---|---|---|
| Starting Current (A) | | 2.1 ~ 3.5 |
| CCF | 1.6 | ≤ 1.8 |
| OCV (V) | 270 ~ 340 | |
| di/dt (A/ms) | 1.2 | ≥ 0.80 |
| Off Time (Sec.) | 2.5 | ≤ 2.75 |
| Peak Current (A) | 4.9 | ≤ 5.0 |
| Overshoot (V) | 16 | ≤ 75 |
| VSS (V) | 230 | |

## OPTIONAL FEATURES

(ADD SUFFIX FOR OPTIONS)

| | |
|---|---|
| -WB | With welded bracket |
| -I | With ignitor |
| -DC | With dry film capacitor |
| -OC | With oil filled capacitor |
| -K | With distributor replacement kit (includes bracket, capacitor and ignitor as necessary) |

HATCH

**PART NO.**
# GM250-MLT-CWAA

MAGNETIC

# MAGNETIC HID BALLAST

| | | | |
|---|---|---|---|
| **Ballast Type** | Magnetic Probe Start | **Circuit Type** | CWA |
| **Lamp** | 250W Metal Halide M58 | **Frequency** | 60Hz |

## PHYSICAL DIMENSIONS

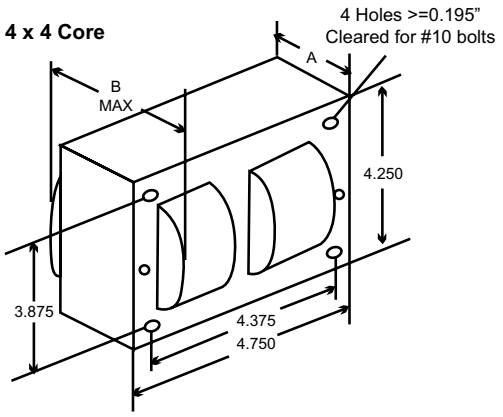


## WIRING DIAGRAM

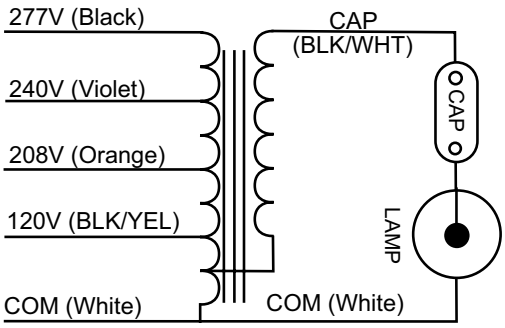


## CAPACITOR

Dry Type or Oil Oval

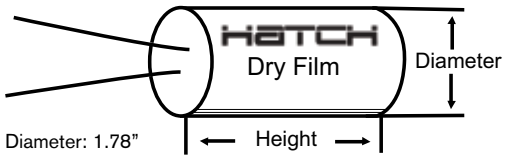


Diameter: 1.78"
Height: 3.15"

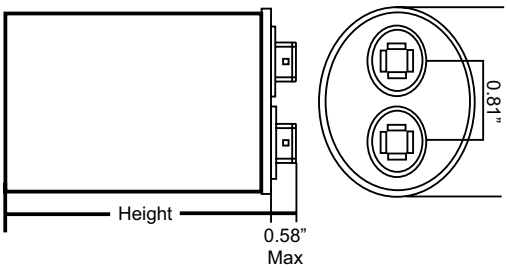


Height: 2.75"

Length: 1.91"
Width: 2.91"

2 YEAR WARRANTY FROM DATE OF MANUFACTURE

## ELECTRICAL SPECIFICATIONS

| | | Quad Tap | | | | |
|---|---|---|---|---|---|---|
| **Input Voltage (V)** | | **120** | **208** | **240** | **277** | |
| Line Current (A) | Operating | 2.6 | 1.5 | 1.3 | 1.15 | |
| | Open Circuit | 2.3 | 1.3 | 1.2 | 1.0 | |
| | Starting | 1.4 | 0.8 | 0.7 | 0.6 | |
| Recommended Fuse | | 10 | 6 | 5 | 5 | |
| Input Voltage At Lamp Dropout | | 60 | 115 | 130 | 150 | |
| UL Class H 180°C Temp. Code | | A | A | A | A | |
| Nom. Open Circuit Voltage | | 304 | | | | |
| Input Power (W) | | 295 | | | | |
| Power Factor( ≥ %) | | 90 | | | | |
| Regulation (± %) | Line Volts | 10 | | | | |
| | Lamp Watts | 10 | | | | |
| Min. Starting Temp | | -20°F / -30°C | | | | |
| Ballast Dimensions (inches) | A | 1.61 | | | | |
| | B | 3.54 | | | | |
| Ballast Net Weight (lbs) | | 8.0 | | | | |
| Lead Length (inches) | | 12 | | | | |
| Capacitor | Capacitance (µF) | 15 | | | | |
| | Min VAC Rating (V) | 400 | | | | |
| Requires Ignitor Model | | N/A | | | | |
| Coil Material (Pri./ Sec.) | | Al / Al | | | | |

## 60 HZ. TEST PROCEDURES

| | | | | | | | |
|---|---|---|---|---|---|---|---|
| Short Circuit Current (A) | Secondary | Min | 2.5 | | | | |
| | | Max | 3.5 | | | | |
| | Input | Min | 0.9 | 0.5 | 0.4 | 0.4 | |
| | | Max | 2.7 | 1.5 | 1.3 | 1.1 | |
| Open Circuit Voltage (V) | | Min | 270 | | | | |
| | | Max | 340 | | | | |
| High Potential Test (V) | | 1 Minute | 2000 | | | | |
| | | 1 Second | 2400 | | | | |

## REFERENCE LAMP DATA

| | Test Range | ANSI Standard |
|---|---|---|
| Starting Current (A) | | 2.5 ~ 3.5 |
| CCF | 1.6 | ≤ 1.8 |
| OCV (V) | 270 ~ 340 | |
| di/dt (A/ms) | 1.2 | ≥ 0.80 |
| Off Time (Sec.) | 2.4 | ≤ 2.75 |
| Peak Current (A) | 4.2 | ≤ 5.0 |
| Overshoot (V) | 40 | ≤ 75 |
| VSS (V) | 256 | |

## OPTIONAL FEATURES

(ADD SUFFIX FOR OPTIONS)

| | |
|---|---|
| -WB | With welded bracket |
| -I | With ignitor |
| -DC | With dry film capacitor |
| -OC | With oil filled capacitor |
| -K | With distributor replacement kit (includes bracket, capacitor and ignitor as necessary) |

HATCH

**PART NO.**
# GM400-ML5-CWCA

MAGNETIC

# MAGNETIC HID BALLAST

| | | | |
|---|---|---|---|
| **Ballast Type** | Magnetic Probe Start | **Circuit Type** | CWA |
| **Lamp** | 400W Metal Halide M59 | **Frequency** | 60Hz |

## PHYSICAL DIMENSIONS

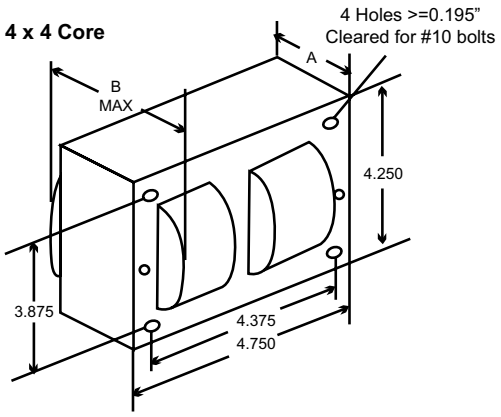


## WIRING DIAGRAM

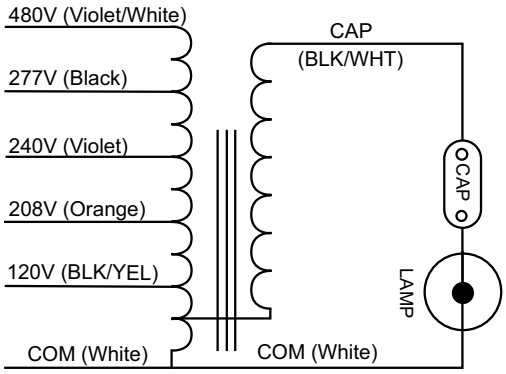


## CAPACITOR

Dry Type or Oil Oval

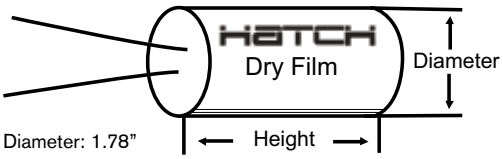


Diameter: 1.78"
Height: 3.15"

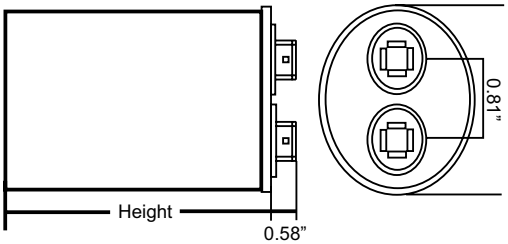


Height: 3.13"
Length: 1.91"
Width: 2.91"

**2 YEAR WARRANTY FROM DATE OF MANUFACTURE**

## ELECTRICAL SPECIFICATIONS

| | | Five Tap | | | | |
|---|---|---|---|---|---|---|
| **Input Voltage (V)** | | **120** | **208** | **240** | **277** | **480** |
| Line Current (A) | Operating | 4.0 | 2.3 | 2.0 | 1.8 | 1.0 |
| | Open Circuit | 2.9 | 1.7 | 1.5 | 1.2 | 0.7 |
| | Starting | 2.9 | 1.7 | 1.5 | 1.1 | 0.7 |
| Recommended Fuse | | 12 | 8 | 6 | 6 | 4 |
| Input Voltage At Lamp Dropout | | 65 | 110 | 130 | 160 | 270 |
| UL Class H 180°C Temp. Code | | B | B | C | C | C |
| Nom. Open Circuit Voltage | | 300 | | | | |
| Input Power (W) | | 452 | | | | |
| Power Factor( ≥ %) | | 90 | | | | |
| Regulation (± %) | Line Volts | 10 | | | | |
| | Lamp Watts | 10 | | | | |
| Min. Starting Temp | | -20°F / -30°C | | | | |
| Ballast Dimensions (inches) | A | 2.32 | | | | |
| | B | 4.26 | | | | |
| Ballast Net Weight (lbs) | | 11.4 | | | | |
| Lead Length (inches) | | 12 | | | | |
| Capacitor | Capacitance (µF) | 24 | | | | |
| | Min VAC Rating (V) | 360 | | | | |
| Requires Ignitor Model | | N/A | | | | |
| Coil Material (Pri./ Sec.) | | Cu / Al | | | | |

## 60 HZ. TEST PROCEDURES

| | | | | | | | |
|---|---|---|---|---|---|---|---|
| Short Circuit Current (A) | Secondary | Min | 3.2 | | | | |
| | | Max | 5.0 | | | | |
| | Input | Min | 1.1 | 0.7 | 0.6 | 0.5 | 0.3 |
| | | Max | 3.3 | 2.0 | 1.7 | 1.5 | 0.9 |
| Open Circuit Voltage (V) | | Min | 280 | | | | |
| | | Max | 330 | | | | |
| High Potential Test (V) | | 1 Minute | 2000 | | | | |
| | | 1 Second | 2400 | | | | |

## REFERENCE LAMP DATA

| | Test Range | ANSI Standard |
|---|---|---|
| Starting Current (A) | | 3.2 ~ 5.0 |
| CCF | 1.6 | ≤ 1.8 |
| OCV (V) | 280 ~ 330 | |
| di/dt (A/ms) | 4.1 | ≥ 1.0 |
| Off Time (Sec.) | 2.5 | ≤ 2.75 |
| Peak Current (A) | 6.5 | ≤ 9.0 |
| Overshoot (V) | 60 | ≤ 100 |
| VSS (V) | 236 | |

## OPTIONAL FEATURES

(ADD SUFFIX FOR OPTIONS)

| | |
|---|---|
| -WB | With welded bracket |
| -I | With ignitor |
| -DC | With dry film capacitor |
| -OC | With oil filled capacitor |
| -K | With distributor replacement kit (includes bracket, capacitor and ignitor as necessary) |

HATCH

**Part No.**
**GM400-MLT-CWAA**
MAGNETIC

# MAGNETIC HID BALLAST

| | | | |
|---|---|---|---|
| **Ballast Type** | Magnetic Probe Start | **Circuit Type** | CWA |
| **Lamp** | 400W Metal Halide M59 | **Frequency** | 60Hz |

## PHYSICAL DIMENSIONS

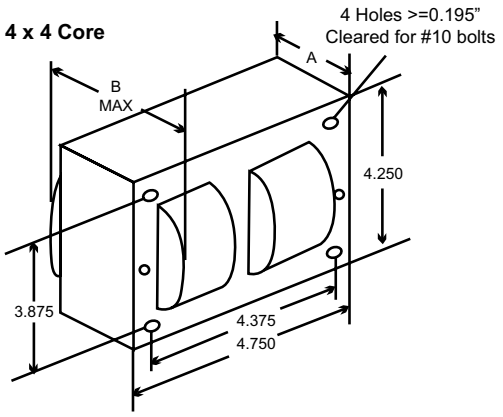


## WIRING DIAGRAM

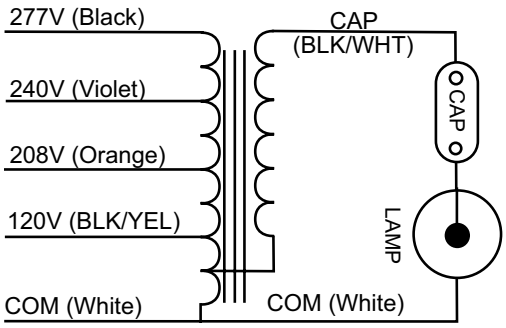


## CAPACITOR

Dry Type or Oil Oval

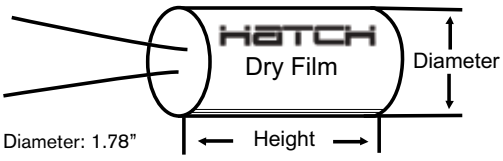


Diameter: 1.78"
Height: 3.15"

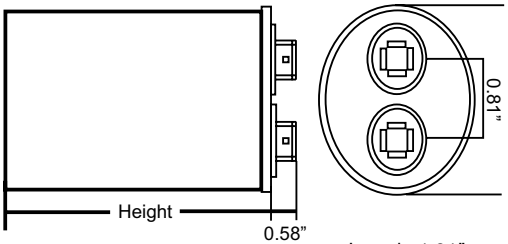


Height: 3.13"
Length: 1.91"
Width: 2.91"

RoHS COMPLIANT

c UL us

**2 Year Warranty From Date of Manufacture**

## ELECTRICAL SPECIFICATIONS

| | | Quad Tap | | | | |
|---|---|---|---|---|---|---|
| **Input Voltage (V)** | | **120** | **208** | **240** | **277** | |
| Line Current (A) | Operating | 4.0 | 2.3 | 2.0 | 1.8 | |
| | Open Circuit | 2.6 | 1.6 | 1.4 | 1.2 | |
| | Starting | 3.2 | 1.8 | 1.6 | 1.4 | |
| Recommended Fuse | | 12 | 8 | 6 | 6 | |
| Input Voltage At Lamp Dropout | | 65 | 110 | 130 | 160 | |
| UL Class H 180°C Temp. Code | | B | C | C | D | |
| Nom. Open Circuit Voltage | | 300 | | | | |
| Input Power (W) | | 458 | | | | |
| Efficiency (%) | | 86 | | | | |
| Power Factor( ≥%) | | 90 | | | | |
| Regulation (± %) | Line Volts | 10 | | | | |
| | Lamp Watts | 10 | | | | |
| Min. Starting Temp | | -20°F / -30°C | | | | |
| Ballast Dimensions (inches) | A | 2.16 | | | | |
| | B | 4.2 | | | | |
| Ballast Net Weight (lbs) | | 11.04 | | | | |
| Lead Length (inches) | | 12 | | | | |
| Capacitor | Capacitance (µF) | 24 | | | | |
| | Min VAC Rating (V) | 360 | | | | |
| Requires Ignitor Model | | N/A | | | | |
| Coil Material (Pri./ Sec.) | | Al / Al | | | | |

## 60 HZ. TEST PROCEDURES

| | | | | | | | |
|---|---|---|---|---|---|---|---|
| Short Circuit Current (A) | Secondary | Min | 3.2 | | | | |
| | | Max | 5.0 | | | | |
| | Input | Min | 1.6 | 0.9 | 0.8 | 0.7 | |
| | | Max | 4.8 | 2.8 | 2.5 | 2.2 | |
| Open Circuit Voltage (V) | | Min | 280 | | | | |
| | | Max | 330 | | | | |
| High Potential Test (V) | | 1 Minute | 2000 | | | | |
| | | 1 Second | 2400 | | | | |

## REFERENCE LAMP DATA

| | Test Range | ANSI Standard |
|---|---|---|
| Starting Current (A) | | 3.2 ~ 5.0 |
| CCF | 1.6 | ≤1.8 |
| OCV (V) | 280 ~ 330 | |
| di/dt (A/ms) | 4.0 | ≤1.0 |
| Off Time (Sec.) | 2.5 | ≤2.75 |
| Peak Current (A) | 6.2 | ≤9.0 |
| Overshoot (V) | 65 | ≤100 |
| VSS (V) | 240 | |

## OPTIONAL FEATURES

(ADD SUFFIX FOR OPTIONS)

| | |
|---|---|
| -WB | With welded bracket |
| -I | With ignitor |
| -DC | With dry film capacitor |
| -OC | With oil filled capacitor |
| -K | With distributor replacement kit (includes bracket, capacitor and ignitor as necessary) |

HATCH

**PART NO.**
# GM1000-ML5-CWCA

MAGNETIC

# MAGNETIC HID BALLAST

| | | | |
|---|---|---|---|
| **Ballast Type** | Magnetic Probe Start | **Circuit Type** | CWA |
| **Lamp** | 1000W Metal Halide M47 | **Frequency** | 60Hz |

## PHYSICAL DIMENSIONS

4 1/4" x 6" Core

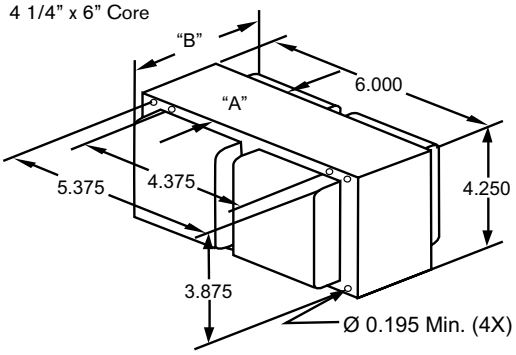


## WIRING DIAGRAM

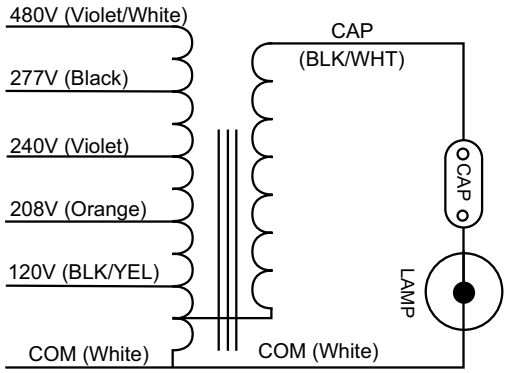


## CAPACITOR

Dry Type or Oil Oval

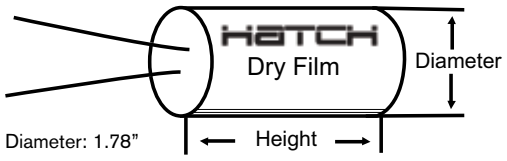


Diameter: 1.78"
Height: 3.15"

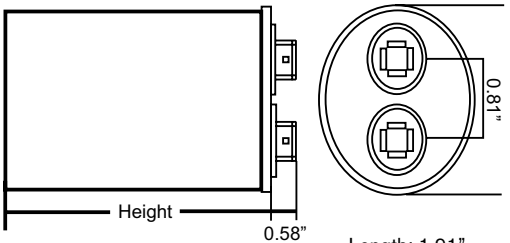


Height: 3.88"
Length: 1.91"
Width: 2.91"

RoHS COMPLIANT

c UL us

**2 YEAR WARRANTY FROM DATE OF MANUFACTURE**

## ELECTRICAL SPECIFICATIONS

| | | Five Tap | | | | |
|---|---|---|---|---|---|---|
| **Input Voltage (V)** | | **120** | **208** | **240** | **277** | **480** |
| Line Current (A) | Operating | 9.2 | 5.3 | 4.6 | 4.0 | 2.3 |
| | Open Circuit | 4.0 | 2.4 | 2.1 | 1.9 | 1.1 |
| | Starting | 8.3 | 4.8 | 4.2 | 3.6 | 2.1 |
| Recommended Fuse | | 20 | 15 | 10 | 10 | 6 |
| Input Voltage At Lamp Dropout | | 70 | 130 | 150 | 180 | 280 |
| UL Class H 180°C Temp. Code | | D | C | C | B | C |
| Nom. Open Circuit Voltage | | 420 | | | | |
| Input Power (W) | | 1087 | | | | |
| Power Factor(≥%) | | 90 | | | | |
| Regulation (± %) | Line Volts | 10 | | | | |
| | Lamp Watts | 10 | | | | |
| Min. Starting Temp | | -20°F / -30°C | | | | |
| Ballast Dimensions (inches) | A | 3.25 | | | | |
| | B | 5.19 | | | | |
| Ballast Net Weight (lbs) | | 19.9 | | | | |
| Lead Length (inches) | | 12 | | | | |
| Capacitor | Capacitance (µF) | 24 | | | | |
| | Min VAC Rating (V) | 480 | | | | |
| Requires Ignitor Model | | N/A | | | | |
| Coil Material (Pri./ Sec.) | | Cu / Al | | | | |

## 60 HZ. TEST PROCEDURES

| | | | | | | | |
|---|---|---|---|---|---|---|---|
| Short Circuit Current (A) | Secondary | Min | 4.2 | | | | |
| | | Max | 6.5 | | | | |
| | Input | Min | 3.0 | 1.7 | 1.5 | 1.3 | 0.7 |
| | | Max | 8.9 | 5.2 | 4.6 | 4.0 | 2.2 |
| Open Circuit Voltage (V) | | Min | 340 | | | | |
| | | Max | 470 | | | | |
| High Potential Test (V) | | 1 Minute | 2000 | | | | |
| | | 1 Second | 2400 | | | | |

## REFERENCE LAMP DATA

| | Test Range | ANSI Standard |
|---|---|---|
| Starting Current (A) | | 4.2 ~ 6.5 |
| CCF | 1.6 | ≤ 1.8 |
| OCV (V) | 340 ~ 470 | |
| di/dt(A/ms) | 1.7 | ≤ 1.5 |
| Off Time (Sec.) | 2.1 | ≤ 2.5 |
| Peak Current (A) | 11.3 | ≤ 11.5 |
| Overshoot (V) | 30 | ≤ 100 |
| VSS (V) | 360 | |

## OPTIONAL FEATURES

(ADD SUFFIX FOR OPTIONS)

| | |
|---|---|
| -WB | With welded bracket |
| -I | With ignitor |
| -DC | With dry film capacitor |
| -OC | With oil filled capacitor |
| -K | With distributor replacement kit (includes bracket, capacitor and ignitor as necessary) |

**Part No.**

# GM1000-MLT-CWCA

MAGNETIC

## PHYSICAL DIMENSIONS

4 1/4" x 6" Core

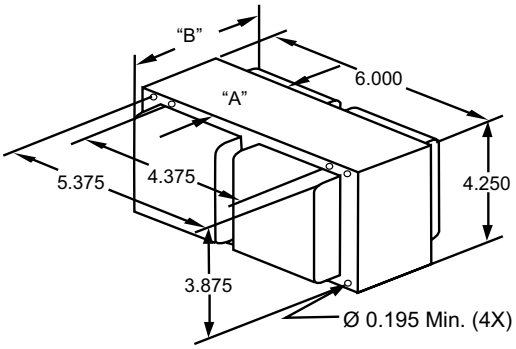


## WIRING DIAGRAM

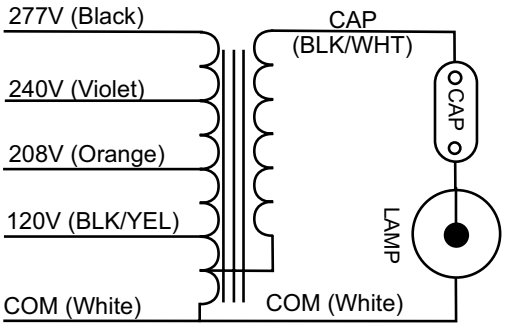


## CAPACITOR

Dry Type or Oil Oval

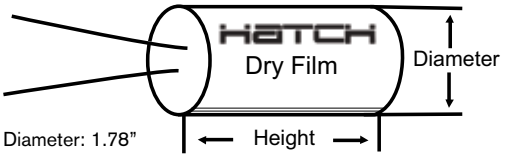


Diameter: 1.78"
Height: 3.15"

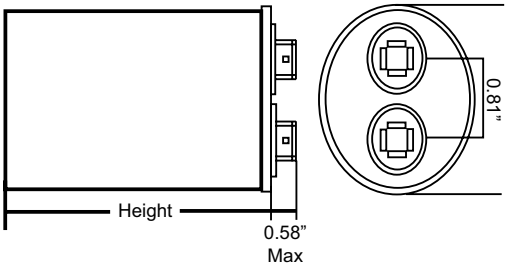


Height: 3.88"

Length: 1.91"
Width: 2.91"

RoHS COMPLIANT

c UL us

**2 Year Warranty From Date of Manufacture**

# MAGNETIC HID BALLAST

| | | | |
|---|---|---|---|
| **Ballast Type** | Magnetic Probe Start | **Circuit Type** | CWA |
| **Lamp** | 1000W Metal Halide M47 | **Frequency** | 60Hz |

## ELECTRICAL SPECIFICATIONS

| | | | Quad Tap | | | | |
|---|---|---|---|---|---|---|---|
| **Input Voltage (V)** | | | **120** | **208** | **240** | **277** | |
| Line Current (A) | Operating | | 9.2 | 5.3 | 4.6 | 4.0 | |
| | Open Circuit | | 5.5 | 3.2 | 2.8 | 2.5 | |
| | Starting | | 5.6 | 3.2 | 2.8 | 2.4 | |
| Recommended Fuse | | | 20 | 15 | 10 | 10 | |
| Input Voltage At Lamp Dropout | | | 70 | 130 | 150 | 180 | |
| UL Class H 180°C Temp. Code | | | D | C | C | C | |
| Nom. Open Circuit Voltage | | | 411 | | | | |
| Input Power (W) | | | 1076 | | | | |
| Power Factor(≥ %) | | | 90 | | | | |
| Regulation (± %) | Line Volts | | 10 | | | | |
| | Lamp Watts | | 10 | | | | |
| Min. Starting Temp | | | -20°F / -30°C | | | | |
| Ballast Dimensions (inches) | | A | 3.01 | | | | |
| | | B | 4.92 | | | | |
| Ballast Net Weight (lbs) | | | 18.9 | | | | |
| Lead Length (inches) | | | 12 | | | | |
| Capacitor | Capacitance (µF) | | 24 | | | | |
| | Min VAC Rating (V) | | 480 | | | | |
| Requires Ignitor Model | | | N/A | | | | |
| Coil Material (Pri./ Sec.) | | | Cu / Al | | | | |

## 60 HZ. TEST PROCEDURES

| | | | | | | | |
|---|---|---|---|---|---|---|---|
| Short Circuit Current (A) | Secondary | Min | 4.2 | | | | |
| | | Max | 6.5 | | | | |
| | Input | Min | 3.2 | 1.9 | 1.6 | 1.4 | |
| | | Max | 9.5 | 5.6 | 4.8 | 4.2 | |
| Open Circuit Voltage (V) | | Min | 340 | | | | |
| | | Max | 460 | | | | |
| High Potential Test (V) | | 1 Minute | 2000 | | | | |
| | | 1 Second | 2400 | | | | |

## REFERENCE LAMP DATA

| | Test Range | ANSI Standard |
|---|---|---|
| Starting Current (A) | | 4.2 ~ 6.5 |
| CCF | 1.5 | ≤1.8 |
| OCV (V) | 340 ~ 460 | |
| di/dt (A/ms) | 1.7 | ≥ 1.5 |
| Off Time (Sec.) | 2.1 | ≤2.5 |
| Peak Current (A) | 11.3 | ≤11.5 |
| Overshoot (V) | 20 | ≤100 |
| VSS (V) | 352 | |

## OPTIONAL FEATURES

(ADD SUFFIX FOR OPTIONS)

| | |
|---|---|
| -WB | With welded bracket |
| -I | With ignitor |
| -DC | With dry film capacitor |
| -OC | With oil filled capacitor |
| -K | With distributor replacement kit (includes bracket, capacitor and ignitor as necessary) |

HATCH

**PART NO.**
# GM1500-48T-CWCA
MAGNETIC

## PHYSICAL DIMENSIONS

**4 1/4" x 6" Core**

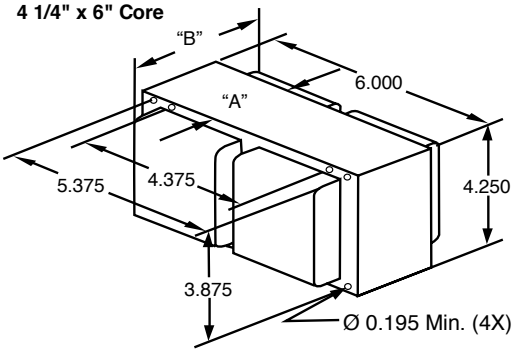


## WIRING DIAGRAM

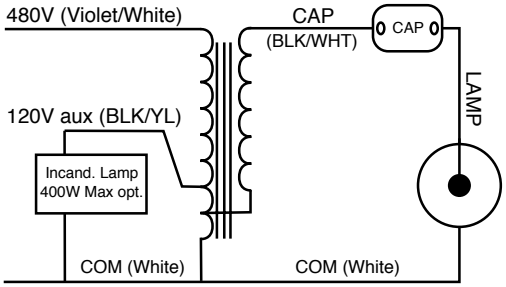


## CAPACITOR

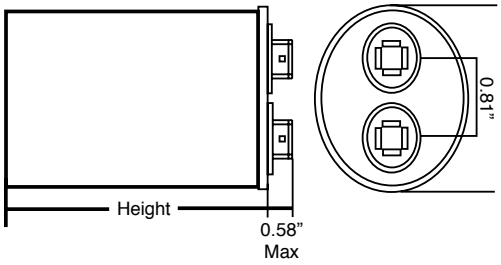


Height: 4.75"

Length: 1.91"
Width: 2.91"

2 YEAR WARRANTY FROM DATE OF MANUFACTURE

# MAGNETIC HID BALLAST

| | | | |
|---|---|---|---|
| **Ballast Type** | Magnetic Probe Start | **Circuit Type** | CWA |
| **Lamp** | 1500W Metal Halide M48 | **Frequency** | 60Hz |

## ELECTRICAL SPECIFICATIONS

| | | Dual Tap |
|---|---|---|
| **Input Voltage (V)** | | **480** |
| Line Current (A) | Operating | 3.6 |
| | Open Circuit | 1.4 |
| | Starting | 2.7 |
| Recommended Fuse | | 10 |
| Input Voltage At Lamp Dropout | | 280 |
| UL Class H 180°C Temp. Code | | G |
| Nom. Open Circuit Voltage | | 416 |
| Input Power (W) | | 1623 |
| Power Factor(≥ %) | | 90 |
| Regulation (± %) | Line Volts | 10 |
| | Lamp Watts | 10 |
| Min. Starting Temp | | -20°F / -30°C |
| Ballast Dimensions (inches) | A | 4.11" |
| | B | 5.9" |
| Ballast Net Weight (lbs) | | 29.0 |
| Lead Length (inches) | | 12 |
| Capacitor | Capacitance (μF) | 32 |
| | Min VAC Rating (V) | 525 |
| Requires Ignitor Model | | N/A |
| Coil Material (Pri./ Sec.) | | Cu / Cu |

## 60 HZ. TEST PROCEDURES

| | | | |
|---|---|---|---|
| Short Circuit Current (A) | Secondary | Min | 6.2 |
| | | Max | 9.0 |
| | Input | Min | 1.5 |
| | | Max | 4.8 |
| Open Circuit Voltage (V) | | Min | 370 |
| | | Max | 460 |
| High Potential Test (V) | | 1 Minute | 2000 |
| | | 1 Second | 2400 |

## REFERENCE LAMP DATA

| | Test Range | ANSI Standard |
|---|---|---|
| Starting Current (A) | | 6.2 ~ 9.0 |
| CCF | 1.6 | ≤ 1.8 |
| OCV (V) | 370 ~ 480 | |
| di/dt (A/ms) | 3.0 | ≥ 2.5 |
| Off Time (Sec.) | 2.3 | ≤ 2.75 |
| Peak Current (A) | 16 | ≤ 16 |
| Overshoot (V) | 32 | ≤ 50 |
| VSS (V) | 420 | |

## OPTIONAL FEATURES

(ADD SUFFIX FOR OPTIONS)

| | |
|---|---|
| -WB | With welded bracket |
| -I | With ignitor |
| -DC | With dry film capacitor |
| -OC | With oil filled capacitor |
| -K | With distributor replacement kit (includes bracket, capacitor and ignitor as necessary) |

# hatch

**Part No.**
**GM1500-48T-CWCC**
MAGNETIC

## MAGNETIC HID BALLAST

| | | | |
|---|---|---|---|
| **Ballast Type** | Magnetic Probe Start | **Circuit Type** | CWA |
| **Lamp** | 1500W Metal Halide M48 | **Frequency** | 60Hz |

## PHYSICAL DIMENSIONS

**4 1/4" x 6" Core**

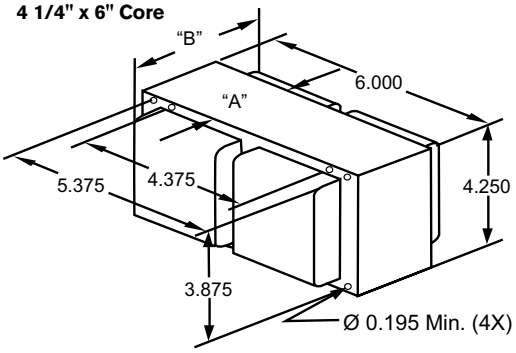


## WIRING DIAGRAM

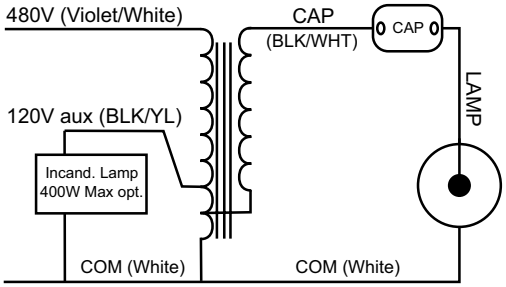


## CAPACITOR

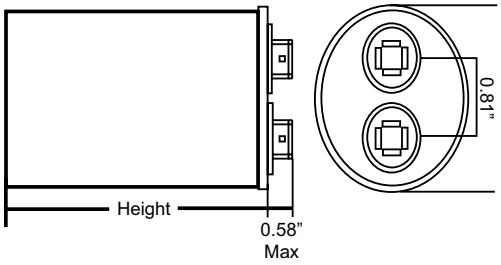


Height: 4.75"

Length: 1.91"
Width: 2.91"

## ELECTRICAL SPECIFICATIONS

| | | Dual Tap |
|---|---|---|
| **Input Voltage (V)** | | **480** |
| Line Current (A) | Operating | 3.6 |
| | Open Circuit | 1.4 |
| | Starting | 2.7 |
| Recommended Fuse | | 10 |
| Input Voltage At Lamp Dropout | | 280 |
| UL Class H 180°C Temp. Code | | G |
| Nom. Open Circuit Voltage | | 416 |
| Input Power (W) | | 1623 |
| Power Factor(≥%) | | 90 |
| Regulation (± %) | Line Volts | 10 |
| | Lamp Watts | 10 |
| Min. Starting Temp | | -20°F / -30°C |
| Ballast Dimensions (inches) | A | 4.11" |
| | B | 5.9" |
| Ballast Net Weight (lbs) | | 29.0 |
| Lead Length (inches) | | 12 |
| Capacitor | Capacitance (µF) | 32 |
| | Min VAC Rating (V) | 525 |
| Requires Ignitor Model | | N/A |
| Coil Material (Pri./ Sec.) | | Cu / Cu |

## 60 HZ. TEST PROCEDURES

| | | | |
|---|---|---|---|
| Short Circuit Current (A) | Secondary | Min | 6.2 |
| | | Max | 9.0 |
| | Input | Min | 1.5 |
| | | Max | 4.8 |
| Open Circuit Voltage (V) | | Min | 370 |
| | | Max | 460 |
| High Potential Test (V) | | 1 Minute | 2000 |
| | | 1 Second | 2400 |

## REFERENCE LAMP DATA

| | Test Range | ANSI Standard |
|---|---|---|
| Starting Current (A) | | 6.2 ~ 9.0 |
| CCF | 1.6 | ≤1.8 |
| OCV (V) | 370 ~ 480 | |
| di/dt (A/ms) | 3.0 | ≥ 2.5 |
| Off Time (Sec.) | 2.3 | ≤2.75 |
| Peak Current (A) | 16 | ≤16 |
| Overshoot (V) | 32 | ≤50 |
| VSS (V) | 420 | |

## OPTIONAL FEATURES

(ADD SUFFIX FOR OPTIONS)

| | |
|---|---|
| -WB | With welded bracket |
| -I | With ignitor |
| -DC | With dry film capacitor |
| -OC | With oil filled capacitor |
| -K | With distributor replacement kit (includes bracket, capacitor and ignitor as necessary) |

RoHS COMPLIANT

c UL us

**2 Year Warranty From Date of Manufacture**

HATCH

**PART NO.**
# GM1500-MLT-CWCC

MAGNETIC

# MAGNETIC HID BALLAST

| | | | |
|---|---|---|---|
| **Ballast Type** | Magnetic Probe Start | **Circuit Type** | CWA |
| **Lamp** | 1500W Metal Halide M48 | **Frequency** | 60Hz |

## PHYSICAL DIMENSIONS

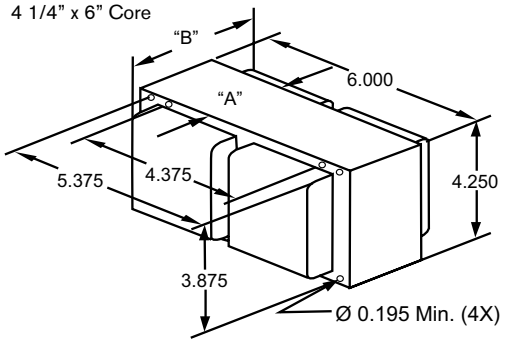


## WIRING DIAGRAM

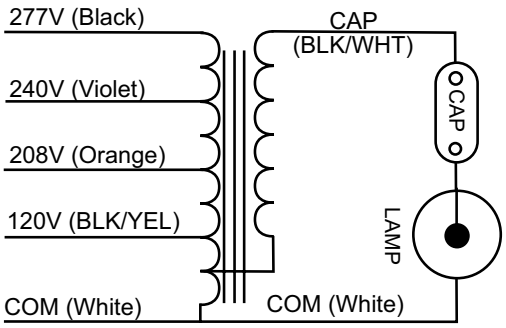


## CAPACITOR

Oil Oval Type

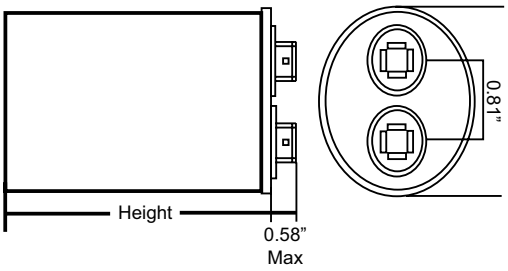


Height: 4.75"

Length: 1.91"
Width: 2.91"

## ELECTRICAL SPECIFICATIONS

| | | Quad Tap | | | | |
|---|---|---|---|---|---|---|
| **Input Voltage (V)** | | **120** | **208** | **240** | **277** | |
| Line Current (A) | Operating | 13.5 | 7.65 | 6.56 | 5.87 | |
| | Open Circuit | 3.8 | 2.3 | 1.9 | 1.8 | |
| | Starting | 11 | 6 | 5.5 | 5 | |
| Recommended Fuse | | 30 | 25 | 20 | 15 | |
| Input Voltage At Lamp Dropout | | 70 | 80 | 140 | 170 | |
| UL Class H 180°C Temp. Code | | E | A | A | A | |
| Nom. Open Circuit Voltage | | 413 | | | | |
| Input Power (W) | | 1602 | | | | |
| Regulation (± %) | Line Volts | 10 | | | | |
| | Lamp Watts | 10 | | | | |
| Min. Starting Temp | | -20°F / -30°C | | | | |
| Ballast Dimensions (inches) | A | 4.1 | | | | |
| | B | 6.3 | | | | |
| Ballast Net Weight (lbs) | | 30 | | | | |
| Lead Length (inches) | | 12 | | | | |
| Capacitor | Capacitance (µF) | 32 | | | | |
| | Min VAC Rating (V) | 525 | | | | |
| Requires Ignitor Model | | N/A | | | | |
| Coil Material (Pri./ Sec.) | | Cu / Cu | | | | |

## 60 HZ. TEST PROCEDURES

| | | | | | | | |
|---|---|---|---|---|---|---|---|
| Short Circuit Current (A) | Secondary | Min | 6.2 | | | | |
| | | Max | 9.0 | | | | |
| | Input | Min | 6.0 | 4.0 | 0.3 | 0.2 | |
| | | Max | 22.0 | 11.0 | 10.0 | 10.0 | |
| Open Circuit Voltage (V) | | Min | 370 | | | | |
| | | Max | 460 | | | | |
| High Potential Test (V) | | 1 Minute | 2000 | | | | |
| | | 1 Second | 2400 | | | | |

## REFERENCE LAMP DATA

| | Test Range | ANSI Standard |
|---|---|---|
| Starting Current (A) | | 6.2 ~ 9.0 |
| CCF | 1.6 | ≤ 1.8 |
| OCV (V) | 370 ~ 490 | |
| di/dt (A/ms) | 3.0 | ≥ 2.5 |
| Off Time (Sec.) | 1.9 | ≤ 2.75 |
| Peak Current (A) | 15.3 | ≤ 16 |
| Overshoot (V) | 50 | ≤ 50 |
| VSS (V) | 386 | |

## OPTIONAL FEATURES

(ADD SUFFIX FOR OPTIONS)

| | |
|---|---|
| -WB | With welded bracket |
| -I | With ignitor |
| -DC | With dry film capacitor |
| -OC | With oil filled capacitor |
| -K | With distributor replacement kit (includes bracket, capacitor and ignitor as necessary) |

RoHS COMPLIANT

c UL us

**2 YEAR WARRANTY FROM DATE OF MANUFACTURE**

**Part No.**

# GS35-A-RNC

MAGNETIC

# MAGNETIC HID BALLAST

| | | | |
|---|---|---|---|
| **Ballast Type** | High Pressure Sodium | **Circuit Type** | R-NPF w/o capacitor<br>R-HPF with capacitor |
| **Lamp** | 35W S76 | **Frequency** | 60Hz |

## PHYSICAL DIMENSIONS

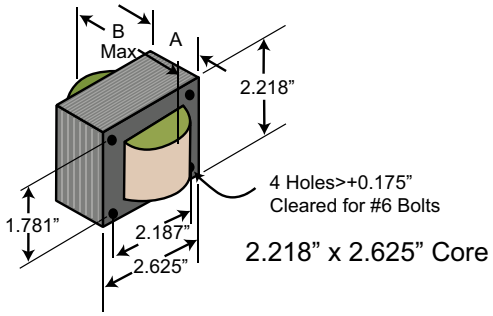


## WIRING DIAGRAM

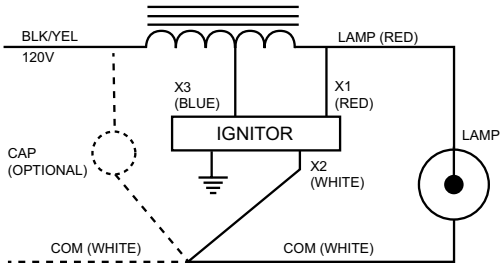


## CAPACITOR

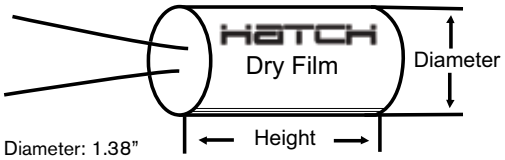


Diameter: 1.38"

Height: 3.17"

## IGNITOR

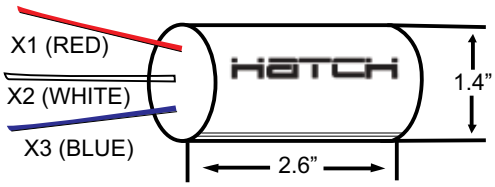


Pulse Height (kV): 2.5 ~ 4.0

Pulse Width (≥ µs): 1.0 @ 2.3kV

RoHS COMPLIANT

c UL us

**2 Year Warranty From Date of Manufacture**

## ELECTRICAL SPECIFICATIONS

| | | | Single Tap | | | | |
|---|---|---|---|---|---|---|---|
| **Input Voltage (V)** | | | **120** | | | | |
| Line Current (A) | Operating (HPF) | | 0.4 | | | | |
| | Operating (NPF) | | 1.0 | | | | |
| | Open Circuit | | 0.8 | | | | |
| | Starting | | 0.6 | | | | |
| Recommended Fuse | | | 3 | | | | |
| Input Voltage At Lamp Dropout | | | 60 | | | | |
| UL Class H 180°C Temp. Code | | | A | | | | |
| Nom. Open Circuit Voltage | | | 120 | | | | |
| Input Power (W) | | | 54 | | | | |
| Power Factor(≥ %) | | | 90 | | | | |
| Regulation (± %) | Line Volts | | 5 | | | | |
| | Lamp Watts | | 10 | | | | |
| Min. Starting Temp | | | -20°F / -30°C | | | | |
| Ballast Dimensions (inches) | | A | 0.61 | | | | |
| | | B | 1.8 | | | | |
| Ballast Net Weight (lbs) | | | 1.1 | | | | |
| Lead Length (inches) | | | 12 | | | | |
| Capacitor | Capacitance (µF) | | 14 | | | | |
| | Min VAC Rating (V) | | 120 | | | | |
| Requires Ignitor Model | | | GHPSR1 | | | | |
| Coil Material (Pri./ Sec.) | | | Cu | | | | |

## 60 HZ. TEST PROCEDURES

| | | | | | | | |
|---|---|---|---|---|---|---|---|
| Short Circuit Current (A) | Secondary | Min | 0.8 | | | | |
| | | Max | 1.3 | | | | |
| | Input | Min | 0.4 | | | | |
| | | Max | 1.2 | | | | |
| Open Circuit Voltage (V) | | Min | 110 | | | | |
| | | Max | 130 | | | | |
| High Potential Test (V) | | 1 Minute | 1400 | | | | |
| | | 1 Second | 1700 | | | | |

## REFERENCE LAMP DATA

| | Test Range | ANSI Standard |
|---|---|---|
| Starting Current (A) | | 0.8 ~ 1.3 |
| CCF | 1.5 | ≤ 1.8 |
| OCV (V) | 110 ~ 130 | |
| Off Time (Sec.) | | |
| Peak Current (A) | | |
| Overshoot (V) | | |
| VSS (V) | | |

## OPTIONAL FEATURES

(ADD SUFFIX FOR OPTIONS)

| | |
|---|---|
| -WB | With welded bracket |
| -I | With ignitor |
| -DC | With dry film capacitor |
| -OC | With oil filled capacitor |
| -K | With distributor replacement kit (includes bracket, capacitor and ignitor as necessary) |

**Part No.**

# GS50-A-RNC

MAGNETIC

# MAGNETIC HID BALLAST

| | | | |
|---|---|---|---|
| **Ballast Type** | High Pressure Sodium | **Circuit Type** | R-NPF w/o capacitor<br>R-HPF with capacitor |
| **Lamp** | 50W S68 | **Frequency** | 60Hz |

## PHYSICAL DIMENSIONS

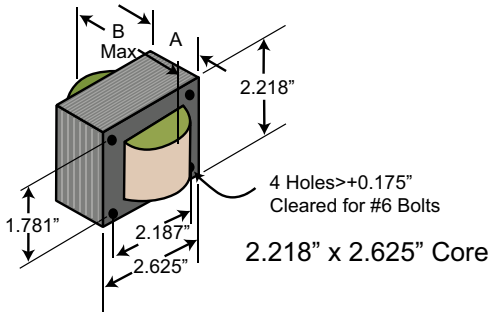


## WIRING DIAGRAM

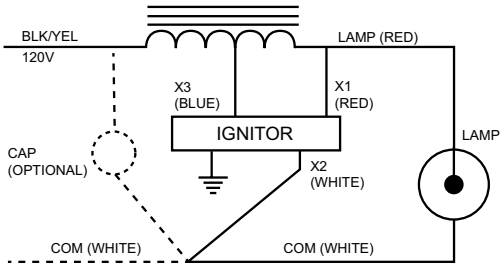


## CAPACITOR

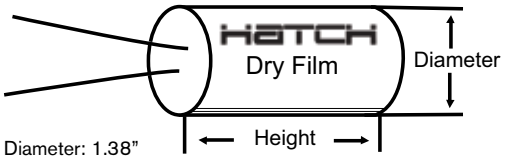


Diameter: 1.38"

Height: 3.17"

## IGNITOR

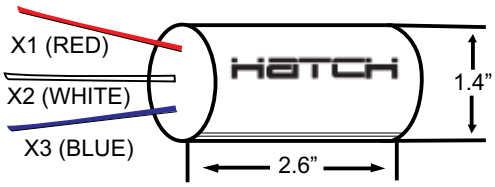


Pulse Height (kV): 2.5 ~ 4.0

Pulse Width (≥ µs): 1.0 @ 2.3kV

RoHS COMPLIANT

c UL us

**2 Year Warranty From Date of Manufacture**

## ELECTRICAL SPECIFICATIONS

| | | | Single Tap | | | | |
|---|---|---|---|---|---|---|---|
| **Input Voltage (V)** | | | **120** | | | | |
| Line Current (A) | Operating (HPF) | | 0.55 | | | | |
| | Operating (NPF) | | 1.2 | | | | |
| | Open Circuit | | 0.9 | | | | |
| | Starting | | 0.7 | | | | |
| Recommended Fuse | | | 4 | | | | |
| Input Voltage At Lamp Dropout | | | 65 | | | | |
| UL Class H 180°C Temp. Code | | | A | | | | |
| Nom. Open Circuit Voltage | | | 120 | | | | |
| Input Power (W) | | | 61 | | | | |
| Power Factor(≥%) | | | 90 | | | | |
| Regulation (± %) | Line Volts | | 5 | | | | |
| | Lamp Watts | | 10 | | | | |
| Min. Starting Temp | | | -20°F / -30°C | | | | |
| Ballast Dimensions (inches) | | A | 0.83 | | | | |
| | | B | 2.0 | | | | |
| Ballast Net Weight (lbs) | | | 1.7 | | | | |
| Lead Length (inches) | | | 12 | | | | |
| Capacitor | Capacitance (µF) | | 20 | | | | |
| | Min VAC Rating (V) | | 120 | | | | |
| Requires Ignitor Model | | | GHPSR1 | | | | |
| Coil Material (Pri./ Sec.) | | | Cu | | | | |

## 60 HZ. TEST PROCEDURES

| | | | | | | | |
|---|---|---|---|---|---|---|---|
| Short Circuit Current (A) | Secondary | Min | 1.2 | | | | |
| | | Max | 1.9 | | | | |
| | Input | Min | 0.6 | | | | |
| | | Max | 1.8 | | | | |
| Open Circuit Voltage (V) | | Min | 110 | | | | |
| | | Max | 130 | | | | |
| High Potential Test (V) | | 1 Minute | 1400 | | | | |
| | | 1 Second | 1700 | | | | |

## REFERENCE LAMP DATA

| | Test Range | ANSI Standard |
|---|---|---|
| Starting Current (A) | | 1.2 ~ 1.9 |
| CCF | 1.5 | ≤1.8 |
| OCV (V) | 110 ~ 130 | |
| Off Time (Sec.) | | |
| Peak Current (A) | | |
| Overshoot (V) | | |
| VSS (V) | | |

## OPTIONAL FEATURES

(ADD SUFFIX FOR OPTIONS)

| | |
|---|---|
| -WB | With welded bracket |
| -I | With ignitor |
| -DC | With dry film capacitor |
| -OC | With oil filled capacitor |
| -K | With distributor replacement kit (includes bracket, capacitor and ignitor as necessary) |

HATCH

**PART NO.**
# GS50-MLT-HXCA

MAGNETIC

## PHYSICAL DIMENSIONS

3" x 4" Core

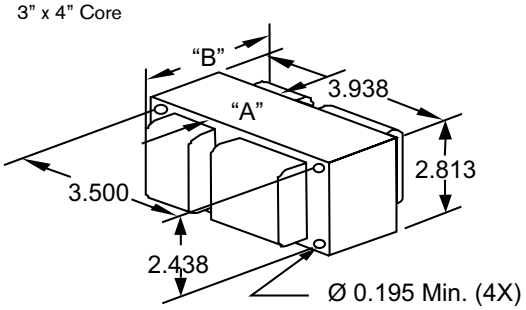


## WIRING DIAGRAM

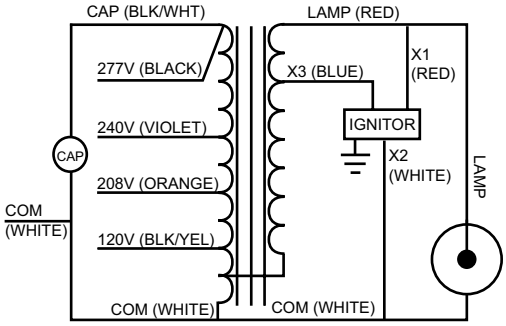


## CAPACITOR

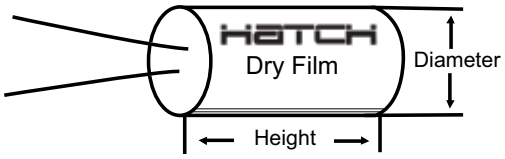


Diameter: 1.38"

Height: 3.17"

## IGNITOR

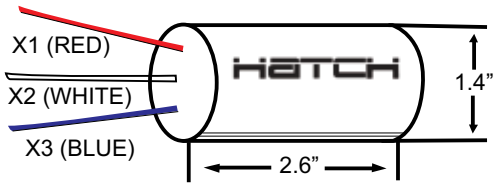


Pulse Height (kV): 2.5 ~ 4.0

Pulse Width (≥ µs): 1.0 @ 2.3kV

RoHS COMPLIANT

c UL us

**2 YEAR WARRANTY FROM DATE OF MANUFACTURE**

# MAGNETIC HID BALLAST

| | | | |
|---|---|---|---|
| **Ballast Type** | High Pressure Sodium | **Circuit Type** | HX-HPF |
| **Lamp** | 50W S68 | **Frequency** | 60Hz |

## ELECTRICAL SPECIFICATIONS

| | | | Quad Tap | | | | |
|---|---|---|---|---|---|---|---|
| **Input Voltage (V)** | | | **120** | **208** | **240** | **277** | |
| Line Current (A) | Operating | | 0.6 | 0.4 | 0.3 | 0.3 | |
| | Open Circuit | | 1.0 | 0.6 | 0.5 | 0.4 | |
| | Starting | | 0.7 | 0.4 | 0.3 | 0.3 | |
| Recommended Fuse | | | 3 | 2 | 2 | 2 | |
| Input Voltage At Lamp Dropout | | | 85 | 160 | 180 | 220 | |
| UL Class H 180°C Temp. Code | | | B | B | B | B | |
| UL Class N 200°C Temp. Code | | | A | A | A | A | |
| Nom. Open Circuit Voltage | | | 125 | | | | |
| Input Power (W) | | | 68 | | | | |
| Power Factor(≥%) | | | 90 | | | | |
| Regulation (± %) | Line Volts | | 5 | | | | |
| | Lamp Watts | | 10 | | | | |
| Min. Starting Temp | | | -40°F / -40°C | | | | |
| Ballast Dimensions (inches) | | A | 1.03 | | | | |
| | | B | 2.52 | | | | |
| Ballast Net Weight (lbs) | | | 3.5 | | | | |
| Lead Length (inches) | | | 12 | | | | |
| Capacitor | Capacitance (µF) | | 5 | | | | |
| | Min VAC Rating (V) | | 280 | | | | |
| Requires Ignitor Model | | | GHPSR1 | | | | |
| Coil Material (Pri./ Sec.) | | | Cu / Al | | | | |

## 60 HZ. TEST PROCEDURES

| | | | | | | | |
|---|---|---|---|---|---|---|---|
| Short Circuit Current (A) | Secondary | Min | 1.2 | | | | |
| | | Max | 1.9 | | | | |
| | Input | Min | 0.3 | 0.2 | 0.2 | 0.1 | |
| | | Max | 1.0 | 0.6 | 0.5 | 0.4 | |
| Open Circuit Voltage (V) | | Min | 110 | | | | |
| | | Max | 140 | | | | |
| High Potential Test (V) | | 1 Minute | 1600 | | | | |
| | | 1 Second | 1900 | | | | |

## REFERENCE LAMP DATA

| | Test Range | ANSI Standard |
|---|---|---|
| Starting Current (A) | | 1.2 ~ 1.9 |
| CCF | 1.4 | ≤1.8 |
| OCV (V) | 110 ~ 140 | |
| Lamp Watts | WITHIN TRAPEZOID | |

## OPTIONAL FEATURES

(ADD SUFFIX FOR OPTIONS)

| | |
|---|---|
| -WB | With welded bracket |
| -I | With ignitor |
| -DC | With dry film capacitor |
| -OC | With oil filled capacitor |
| -K | With distributor replacement kit (includes bracket, capacitor and ignitor as necessary) |

HATCH

**PART NO.**
# GS70-48T-HXCC

MAGNETIC

# MAGNETIC HID BALLAST

| | | | |
|---|---|---|---|
| **Ballast Type** | High Pressure Sodium | **Circuit Type** | HX-HPF |
| **Lamp** | 70W S62 | **Frequency** | 60Hz |

## PHYSICAL DIMENSIONS

3" x 4" Core

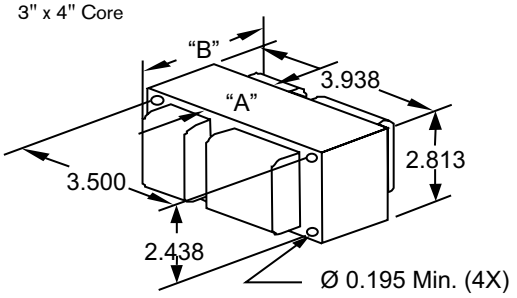


## WIRING DIAGRAM

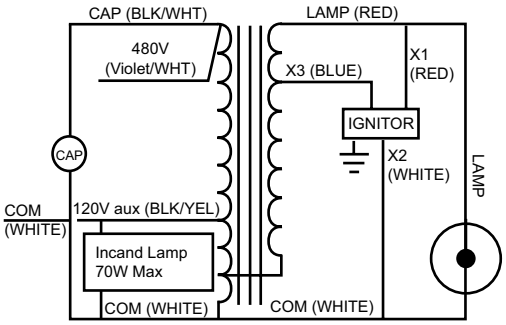


## CAPACITOR

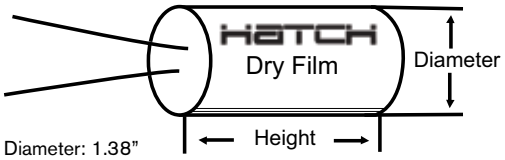


Diameter: 1.38"

Height: 3.17"

## IGNITOR

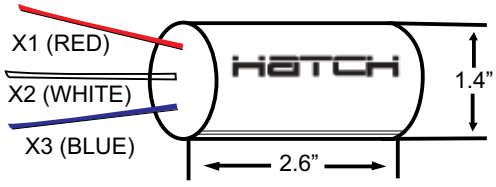


Pulse Height (kV): 2.5 ~ 4.0

Pulse Width (≥ µs): 1.0 @ 2.3kV

RoHS COMPLIANT

c UL us

**2 YEAR WARRANTY FROM DATE OF MANUFACTURE**

## ELECTRICAL SPECIFICATIONS

| | | Dual Tap | | | | |
|---|---|---|---|---|---|---|
| **Input Voltage (V)** | | | | | | **480** |
| Line Current (A) | Operating | | | | | 0.2 |
| | Open Circuit | | | | | 0.4 |
| | Starting | | | | | 0.2 |
| Recommended Fuse | | | | | | 2 |
| Input Voltage At Lamp Dropout | | | | | | 270 |
| UL Class H 180°C Temp. Code | | | | | | A |

| | | |
|---|---|---|
| Nom. Open Circuit Voltage | | 124 |
| Input Power (W) | | 95 |
| Power Factor(≥%) | | 90 |
| Regulation (± %) | Line Volts | 5 |
| | Lamp Watts | 10 |
| Min. Starting Temp | | -40°F / -40°C |
| Ballast Dimensions (inches) | A | 1.85 |
| | B | 3.2 |
| Ballast Net Weight (lbs) | | 5.8 |
| Lead Length (inches) | | 12 |
| Capacitor | Capacitance (µF) | 7 |
| | Min VAC Rating (V) | 300 |
| Requires Ignitor Model | | GHPSR1 |
| Coil Material (Pri./ Sec.) | | Cu / Cu |

## 60 HZ. TEST PROCEDURES

| | | | | | | | |
|---|---|---|---|---|---|---|---|
| Short Circuit Current (A) | Secondary | Min | 1.6 | | | | |
| | | Max | 2.4 | | | | |
| | Input | Min | | | | | 0.1 |
| | | Max | | | | | 0.3 |
| Open Circuit Voltage (V) | | Min | 110 | | | | |
| | | Max | 140 | | | | |
| High Potential Test (V) | | 1 Minute | 1400 | | | | |
| | | 1 Second | 1700 | | | | |

## REFERENCE LAMP DATA

| | Test Range | ANSI Standard |
|---|---|---|
| Starting Current (A) | | 1.6 ~ 2.4 |
| CCF | 1.5 | ≤1.8 |
| OCV (V) | 110 ~ 140 | |
| Lamp Watts | WITHIN TRAPEZOID | |
| | | |
| | | |
| | | |

## OPTIONAL FEATURES

(ADD SUFFIX FOR OPTIONS)

| | |
|---|---|
| -WB | With welded bracket |
| -I | With ignitor |
| -DC | With dry film capacitor |
| -OC | With oil filled capacitor |
| -K | With distributor replacement kit (includes bracket, capacitor and ignitor as necessary) |

**Part No.**

# GS70-A-RNC

MAGNETIC

# MAGNETIC HID BALLAST

| | | | |
|---|---|---|---|
| **Ballast Type** | High Pressure Sodium | **Circuit Type** | R-NPF w/o capacitor<br>R-HPF with capacitor |
| **Lamp** | 70W S62 | **Frequency** | 60Hz |

## PHYSICAL DIMENSIONS

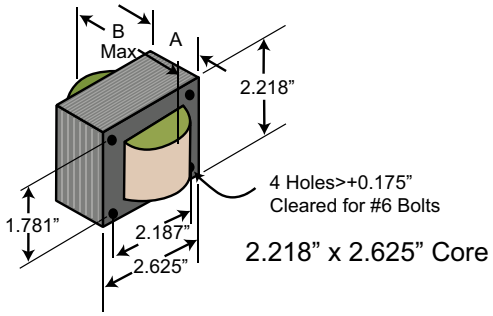


2.218" x 2.625" Core

## WIRING DIAGRAM

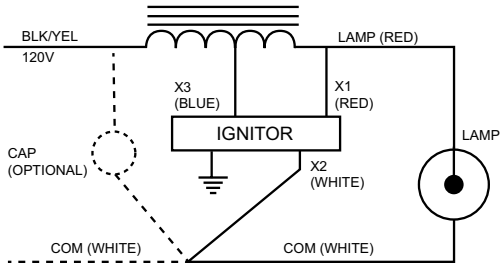


## CAPACITOR

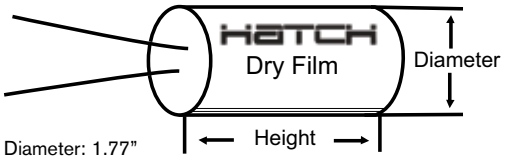


Diameter: 1.77"

Height: 3.17"

## IGNITOR

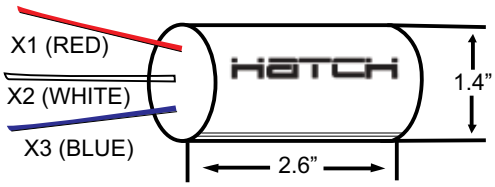


Pulse Height (kV): 2.5 ~ 4.0

Pulse Width (≥ µs): 1.0 @ 2.3kV

RoHS COMPLIANT

c UL us

**2 Year Warranty From Date of Manufacture**

## ELECTRICAL SPECIFICATIONS

| | | | Single Tap | | | | |
|---|---|---|---|---|---|---|---|
| **Input Voltage (V)** | | | **120** | | | | |
| Line Current (A) | Operating (HPF) | | 0.7 | | | | |
| | Operating (NPF) | | 1.65 | | | | |
| | Open Circuit | | 1.35 | | | | |
| | Starting | | 1.0 | | | | |
| Recommended Fuse | | | 4 | | | | |
| Input Voltage At Lamp Dropout | | | 65 | | | | |
| UL Class H 180°C Temp. Code | | | A | | | | |
| Nom. Open Circuit Voltage | | | 120 | | | | |
| Input Power (W) | | | 83 | | | | |
| Power Factor(≥%) | | | 90 | | | | |
| Regulation (± %) | Line Volts | | 5 | | | | |
| | Lamp Watts | | 10 | | | | |
| Min. Starting Temp | | | -20°F / -30°C | | | | |
| Ballast Dimensions (inches) | | A | 1.3 | | | | |
| | | B | 2.5 | | | | |
| Ballast Net Weight (lbs) | | | 2.0 | | | | |
| Lead Length (inches) | | | 12 | | | | |
| Capacitor | Capacitance (µF) | | 28 | | | | |
| | Min VAC Rating (V) | | 120 | | | | |
| Requires Ignitor Model | | | GHPSR1 | | | | |
| Coil Material (Pri./ Sec.) | | | Cu | | | | |

## 60 HZ. TEST PROCEDURES

| | | | | | | | |
|---|---|---|---|---|---|---|---|
| Short Circuit Current (A) | Secondary | Min | 1.6 | | | | |
| | | Max | 2.4 | | | | |
| | Input | Min | 0.8 | | | | |
| | | Max | 2.4 | | | | |
| Open Circuit Voltage (V) | | Min | 110 | | | | |
| | | Max | 130 | | | | |
| High Potential Test (V) | | 1 Minute | 1400 | | | | |
| | | 1 Second | 1700 | | | | |

## REFERENCE LAMP DATA

| | Test Range | ANSI Standard |
|---|---|---|
| Starting Current (A) | | 1.6 ~ 2.4 |
| CCF | 1.5 | ≤1.8 |
| OCV (V) | 110 ~ 130 | |
| Lamp Watts | WITHIN TRAPEZOID | |
| | | |
| | | |
| | | |

## OPTIONAL FEATURES

(ADD SUFFIX FOR OPTIONS)

| | |
|---|---|
| -WB | With welded bracket |
| -I | With ignitor |
| -DC | With dry film capacitor |
| -OC | With oil filled capacitor |
| -K | With distributor replacement kit (includes bracket, capacitor and ignitor as necessary) |

HATCH

**PART NO.**
# GS70-MLT-HXCA

MAGNETIC

# MAGNETIC HID BALLAST

| | | | |
|---|---|---|---|
| **Ballast Type** | High Pressure Sodium | **Circuit Type** | HX-HPF |
| **Lamp** | 70W S62 | **Frequency** | 60Hz |

## PHYSICAL DIMENSIONS

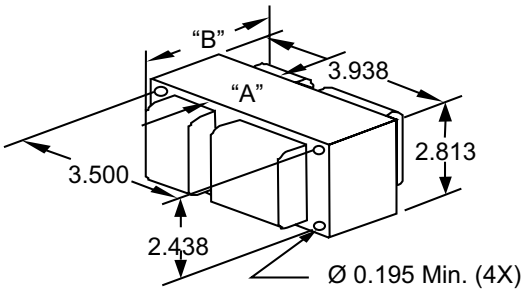


## WIRING DIAGRAM

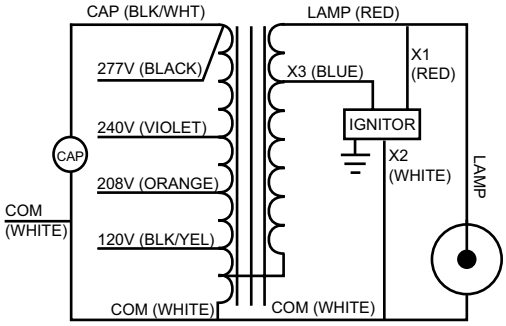


## CAPACITOR

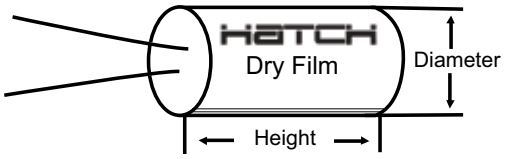


Diameter: 1.38"

Height: 3.17"

## IGNITOR

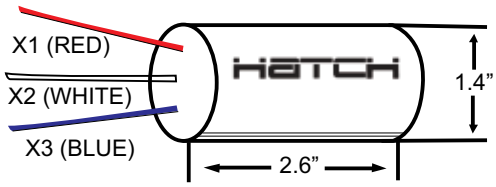


Pulse Height (kV): 2.5 ~ 4.0

Pulse Width (≥ µs): 1.0 @ 2.3kV

RoHS COMPLIANT

c UL us

**2 YEAR WARRANTY FROM DATE OF MANUFACTURE**

## ELECTRICAL SPECIFICATIONS

| | | | Quad Tap | | | | |
|---|---|---|---|---|---|---|---|
| **Input Voltage (V)** | | | **120** | **208** | **240** | **277** | |
| Line Current (A) | Operating | | 0.8 | 0.5 | 0.4 | 0.4 | |
| | Open Circuit | | 1.4 | 0.8 | 0.7 | 0.6 | |
| | Starting | | 0.8 | 0.5 | 0.4 | 0.4 | |
| Recommended Fuse | | | 3 | 2 | 2 | 2 | |
| Input Voltage At Lamp Dropout | | | 85 | 140 | 160 | 185 | |
| UL Class H 180°C Temp. Code | | | B | B | B | B | |
| UL Class N 200°C Temp. Code | | | A | A | A | A | |
| Nom. Open Circuit Voltage | | | 125 | | | | |
| Input Power (W) | | | 95 | | | | |
| Power Factor(≥%) | | | 90 | | | | |
| Regulation (± %) | Line Volts | | 5 | | | | |
| | Lamp Watts | | 10 | | | | |
| Min. Starting Temp | | | -40°F / -40°C | | | | |
| Ballast Dimensions (inches) | | A | 1.54 | | | | |
| | | B | 2.95 | | | | |
| Ballast Net Weight (lbs) | | | 4.6 | | | | |
| Lead Length (inches) | | | 12 | | | | |
| Capacitor | Capacitance (µF) | | 7 | | | | |
| | Min VAC Rating (V) | | 280 | | | | |
| Requires Ignitor Model | | | GHPSR1 | | | | |
| Coil Material (Pri./ Sec.) | | | Cu / Al | | | | |

## 60 HZ. TEST PROCEDURES

| | | | | | | | |
|---|---|---|---|---|---|---|---|
| Short Circuit Current (A) | Secondary | Min | 1.6 | | | | |
| | | Max | 2.4 | | | | |
| | Input | Min | 0.4 | 0.3 | 0.2 | 0.2 | |
| | | Max | 1.2 | 0.8 | 0.6 | 0.5 | |
| Open Circuit Voltage (V) | | Min | 110 | | | | |
| | | Max | 140 | | | | |
| High Potential Test (V) | | 1 Minute | 1600 | | | | |
| | | 1 Second | 1900 | | | | |

## REFERENCE LAMP DATA

| | Test Range | ANSI Standard |
|---|---|---|
| Starting Current (A) | | 1.6 ~ 2.4 |
| CCF | 1.4 | ≤1.8 |
| OCV (V) | 110 ~ 140 | |
| Lamp Watts | WITHIN TRAPEZOID | |

## OPTIONAL FEATURES

(ADD SUFFIX FOR OPTIONS)

| | |
|---|---|
| -WB | With welded bracket |
| -I | With ignitor |
| -DC | With dry film capacitor |
| -OC | With oil filled capacitor |
| -K | With distributor replacement kit (includes bracket, capacitor and ignitor as necessary) |

**Part No.**

# GS100-48T-HXCC

MAGNETIC

# MAGNETIC HID BALLAST

| | | | |
|---|---|---|---|
| **Ballast Type** | High Pressure Sodium | **Circuit Type** | HX-HPF |
| **Lamp** | 100W S54 | **Frequency** | 60Hz |

## PHYSICAL DIMENSIONS

3" x 4" Core

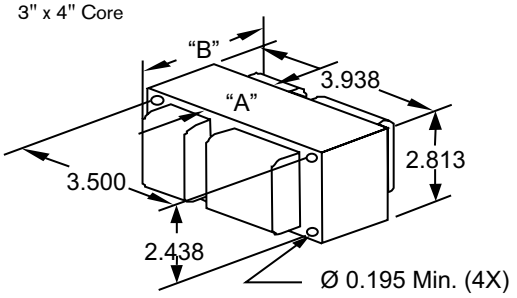


## WIRING DIAGRAM

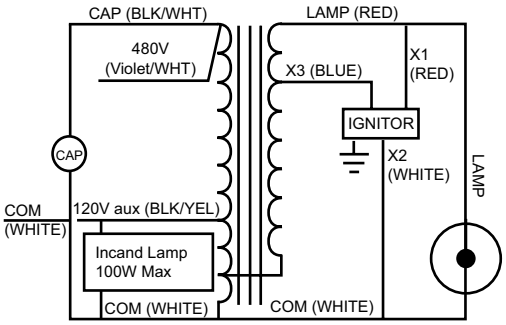


## CAPACITOR

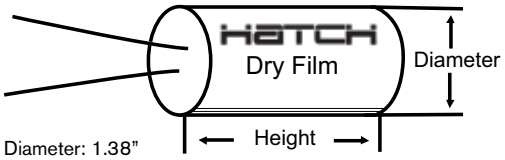


Diameter: 1.38"

Height: 3.17"

## IGNITOR

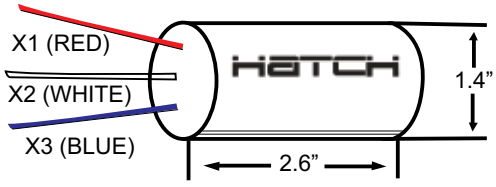


Pulse Height (kV): 2.5 ~ 4.0

Pulse Width (≥ µs): 1.0 @ 2.3kV

RoHS COMPLIANT

c UL us

**2 Year Warranty From Date of Manufacture**

## ELECTRICAL SPECIFICATIONS

| | | Dual Tap | | | | |
|---|---|---|---|---|---|---|
| **Input Voltage (V)** | | | | | | **480** |
| Line Current (A) | Operating | | | | | 0.3 |
| | Open Circuit | | | | | 0.55 |
| | Starting | | | | | 0.23 |
| Recommended Fuse | | | | | | 3 |
| Input Voltage At Lamp Dropout | | | | | | 270 |
| UL Class H 180°C Temp. Code | | | | | | C |
| Nom. Open Circuit Voltage | | 121 | | | | |
| Input Power (W) | | 132 | | | | |
| Power Factor(≥%) | | 90 | | | | |
| Regulation (± %) | Line Volts | 5 | | | | |
| | Lamp Watts | 10 | | | | |
| Min. Starting Temp | | -40°F / -40°C | | | | |
| Ballast Dimensions (inches) | A | 1.99 | | | | |
| | B | 3.4 | | | | |
| Ballast Net Weight (lbs) | | 6.2 | | | | |
| Lead Length (inches) | | 12 | | | | |
| Capacitor | Capacitance (µF) | 10 | | | | |
| | Min VAC Rating (V) | 280 | | | | |
| Requires Ignitor Model | | GHPSR1 | | | | |
| Coil Material (Pri./ Sec.) | | Cu / Cu | | | | |

## 60 HZ. TEST PROCEDURES

| | | | | | | | |
|---|---|---|---|---|---|---|---|
| Short Circuit Current (A) | Secondary | Min | 2.1 | | | | |
| | | Max | 3.2 | | | | |
| | Input | Min | | | | | 0.1 |
| | | Max | | | | | 0.4 |
| Open Circuit Voltage (V) | | Min | 110 | | | | |
| | | Max | 140 | | | | |
| High Potential Test (V) | | 1 Minute | 1400 | | | | |
| | | 1 Second | 1700 | | | | |

## REFERENCE LAMP DATA

| | Test Range | ANSI Standard |
|---|---|---|
| Starting Current (A) | | 2.1 ~ 3.2 |
| CCF | 1.5 | ≤1.8 |
| OCV (V) | 110 ~ 140 | |
| Lamp Watts | WITHIN TRAPEZOID | |
| | | |
| | | |
| | | |

## OPTIONAL FEATURES

(ADD SUFFIX FOR OPTIONS)

| | |
|---|---|
| -WB | With welded bracket |
| -I | With ignitor |
| -DC | With dry film capacitor |
| -OC | With oil filled capacitor |
| -K | With distributor replacement kit (includes bracket, capacitor and ignitor as necessary) |

**Part No.**

# GS100-A-RNA

MAGNETIC

# MAGNETIC HID BALLAST

| | | | |
|---|---|---|---|
| **Ballast Type** | High Pressure Sodium | **Circuit Type** | R-NPF w/o capacitor<br>R-HPF with capacitor |
| **Lamp** | 70W S62 | **Frequency** | 60Hz |

## PHYSICAL DIMENSIONS

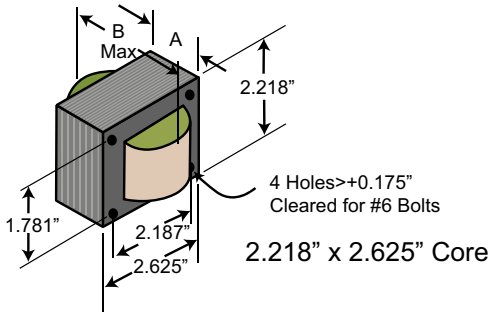


## WIRING DIAGRAM

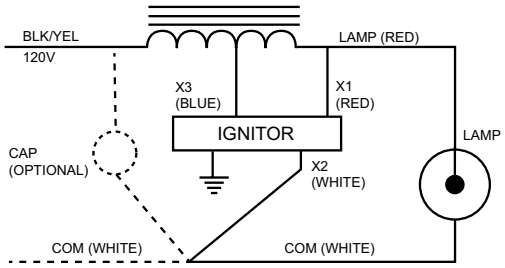


## CAPACITOR

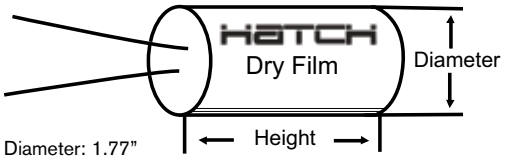


Diameter: 1.77"

Height: 3.17"

## IGNITOR

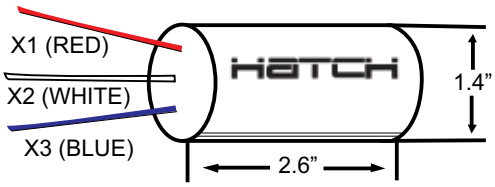


Pulse Height (kV): 2.5 ~ 4.0

Pulse Width (≥µs): 1.0 @ 2.3kV

RoHS COMPLIANT

c UL us

**2 Year Warranty From Date of Manufacture**

## ELECTRICAL SPECIFICATIONS

| | | | Single Tap | | | | |
|---|---|---|---|---|---|---|---|
| **Input Voltage (V)** | | | **120** | | | | |
| Line Current (A) | Operating (HPF) | | 1.0 | | | | |
| | Operating (NPF) | | 2.1 | | | | |
| | Open Circuit | | 1.6 | | | | |
| | Starting | | 1.3 | | | | |
| Recommended Fuse | | | 5 | | | | |
| Input Voltage At Lamp Dropout | | | 65 | | | | |
| UL Class H 180°C Temp. Code | | | A | | | | |
| Nom. Open Circuit Voltage | | | 120 | | | | |
| Input Power (W) | | | 116 | | | | |
| Power Factor(≥%) | | | 90 | | | | |
| Regulation (± %) | Line Volts | | 5 | | | | |
| | Lamp Watts | | 10 | | | | |
| Min. Starting Temp | | | -20°F / -30°C | | | | |
| Ballast Dimensions (inches) | | A | 1.77 | | | | |
| | | B | 2.95 | | | | |
| Ballast Net Weight (lbs) | | | 2.5 | | | | |
| Lead Length (inches) | | | 12 | | | | |
| Capacitor | Capacitance (µF) | | 36 | | | | |
| | Min VAC Rating (V) | | 120 | | | | |
| Requires Ignitor Model | | | GHPSR1 | | | | |
| Coil Material (Pri./ Sec.) | | | Al | | | | |

## 60 HZ. TEST PROCEDURES

| | | | | | | | |
|---|---|---|---|---|---|---|---|
| Short Circuit Current (A) | Secondary | Min | 2.1 | | | | |
| | | Max | 3.0 | | | | |
| | Input | Min | 0.7 | | | | |
| | | Max | 2.1 | | | | |
| Open Circuit Voltage (V) | | Min | 110 | | | | |
| | | Max | 130 | | | | |
| High Potential Test (V) | | 1 Minute | 1400 | | | | |
| | | 1 Second | 1700 | | | | |

## REFERENCE LAMP DATA

| | Test Range | ANSI Standard |
|---|---|---|
| Starting Current (A) | | 2.1 ~ 3.0 |
| CCF | 1.5 | ≤1.8 |
| OCV (V) | 110 ~ 130 | |
| Lamp Watts | WITHIN TRAPEZOID | |
| | | |
| | | |
| | | |

## OPTIONAL FEATURES

(ADD SUFFIX FOR OPTIONS)

| | |
|---|---|
| -WB | With welded bracket |
| -I | With ignitor |
| -DC | With dry film capacitor |
| -OC | With oil filled capacitor |
| -K | With distributor replacement kit (includes bracket, capacitor and ignitor as necessary) |

**Part No.**
# GS100-MLT-HXCA

MAGNETIC

# MAGNETIC HID BALLAST

| | | | |
|---|---|---|---|
| **Ballast Type** | High Pressure Sodium | **Circuit Type** | HX-HPF |
| **Lamp** | 100W S54 | **Frequency** | 60Hz |

## PHYSICAL DIMENSIONS

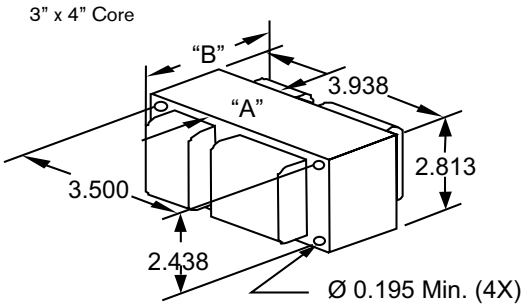


## WIRING DIAGRAM

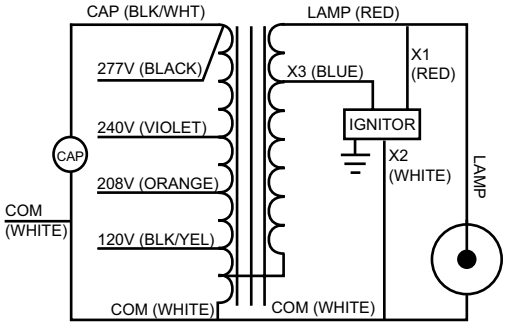


## CAPACITOR

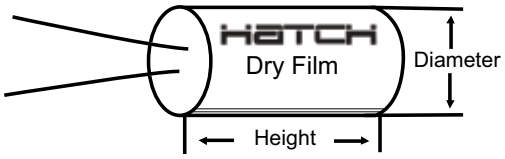


Diameter: 1.38"

Height: 3.17"

## IGNITOR

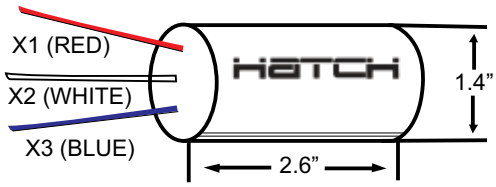


Pulse Height (kV): 2.5 ~ 4.0

Pulse Width (≥ µs): 1.0 @ 2.3kV

RoHS COMPLIANT

c UL us

**2 Year Warranty From Date of Manufacture**

## ELECTRICAL SPECIFICATIONS

| | | | Quad Tap | | | | |
|---|---|---|---|---|---|---|---|
| **Input Voltage (V)** | | | **120** | **208** | **240** | **277** | |
| Line Current (A) | Operating | | 1.1 | 0.7 | 0.6 | 0.5 | |
| | Open Circuit | | 2.2 | 1.3 | 1.1 | 1.0 | |
| | Starting | | 0.8 | 0.5 | 0.4 | 0.4 | |
| Recommended Fuse | | | 4 | 3 | 2 | 2 | |
| Input Voltage At Lamp Dropout | | | 85 | 140 | 160 | 185 | |
| UL Class H 180°C Temp. Code | | | B | B | B | B | |
| UL Class N 200°C Temp. Code | | | A | A | A | A | |
| Nom. Open Circuit Voltage | | | 118 | | | | |
| Input Power (W) | | | 130 | | | | |
| Power Factor(≥%) | | | 90 | | | | |
| Regulation (± %) | Line Volts | | 5 | | | | |
| | Lamp Watts | | 10 | | | | |
| Min. Starting Temp | | | -40°F / -40°C | | | | |
| Ballast Dimensions (inches) | | A | 1.97 | | | | |
| | | B | 3.35 | | | | |
| Ballast Net Weight (lbs) | | | 6.0 | | | | |
| Lead Length (inches) | | | 12 | | | | |
| Capacitor | Capacitance (µF) | | 10 | | | | |
| | Min VAC Rating (V) | | 280 | | | | |
| Requires Ignitor Model | | | GHPSR1 | | | | |
| Coil Material (Pri./ Sec.) | | | Cu / Al | | | | |

## 60 HZ. TEST PROCEDURES

| | | | | | | | |
|---|---|---|---|---|---|---|---|
| Short Circuit Current (A) | Secondary | Min | 2.1 | | | | |
| | | Max | 3.2 | | | | |
| | Input | Min | 0.3 | 0.2 | 0.2 | 0.2 | |
| | | Max | 1.0 | 0.6 | 0.5 | 0.5 | |
| Open Circuit Voltage (V) | | Min | 110 | | | | |
| | | Max | 130 | | | | |
| High Potential Test (V) | | 1 Minute | 1600 | | | | |
| | | 1 Second | 1900 | | | | |

## REFERENCE LAMP DATA

| | Test Range | ANSI Standard |
|---|---|---|
| Starting Current (A) | | 2.1 ~ 3.2 |
| CCF | 1.7 | ≤1.8 |
| OCV (V) | 110 ~ 130 | |
| Lamp Watts | WITHIN TRAPEZOID | |

## OPTIONAL FEATURES

(ADD SUFFIX FOR OPTIONS)

| | |
|---|---|
| -WB | With welded bracket |
| -I | With ignitor |
| -DC | With dry film capacitor |
| -OC | With oil filled capacitor |
| -K | With distributor replacement kit (includes bracket, capacitor and ignitor as necessary) |

HATCH

**PART NO.**
# GS150-48T-HXCC

MAGNETIC

# MAGNETIC HID BALLAST

| | | | |
|---|---|---|---|
| **Ballast Type** | High Pressure Sodium | **Circuit Type** | HX-HPF |
| **Lamp** | 150W S55 | **Frequency** | 60Hz |

## PHYSICAL DIMENSIONS

3" x 4" Core

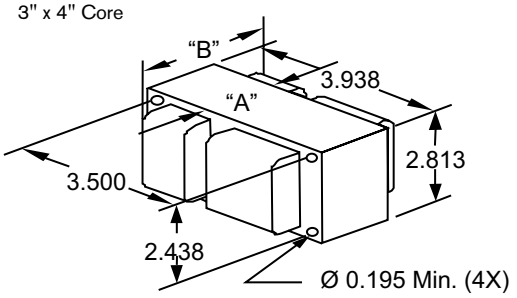


## WIRING DIAGRAM

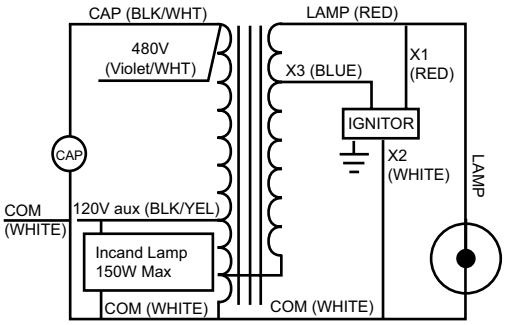


## CAPACITOR

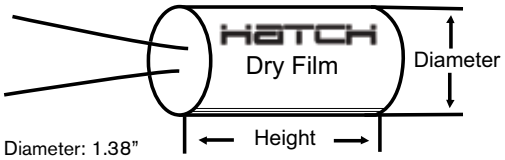


Diameter: 1.38"

Height: 3.17"

## IGNITOR

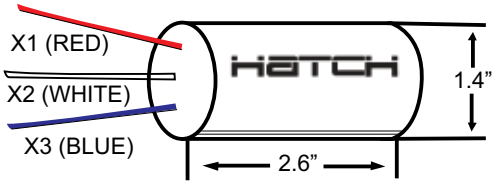


Pulse Height (kV): 2.5 ~ 4.0

Pulse Width (≥ µs): 1.0 @ 2.3kV

RoHS COMPLIANT

c UL us

**2 YEAR WARRANTY FROM DATE OF MANUFACTURE**

## ELECTRICAL SPECIFICATIONS

| | | Dual Tap | | | | |
|---|---|---|---|---|---|---|
| **Input Voltage (V)** | | | | | | **480** |
| Line Current (A) | Operating | | | | | 0.4 |
| | Open Circuit | | | | | 0.8 |
| | Starting | | | | | 0.3 |
| Recommended Fuse | | | | | | 4 |
| Input Voltage At Lamp Dropout | | | | | | 270 |
| UL Class H 180°C Temp. Code | | | | | | F |

| | | |
|---|---|---|
| Nom. Open Circuit Voltage | | 114 |
| Input Power (W) | | 188 |
| Power Factor(≥%) | | 90 |
| Regulation (± %) | Line Volts | 5 |
| | Lamp Watts | 10 |
| Min. Starting Temp | | -20°F / -30°C |
| Ballast Dimensions (inches) | A | 3.0 |
| | B | 4.3 |
| Ballast Net Weight (lbs) | | 8.6 |
| Lead Length (inches) | | 12 |
| Capacitor | Capacitance (µF) | 14 |
| | Min VAC Rating (V) | 280 |
| Requires Ignitor Model | | GHPSR1 |
| Coil Material (Pri./ Sec.) | | Cu / Cu |

## 60 HZ. TEST PROCEDURES

| | | | | | | | | |
|---|---|---|---|---|---|---|---|---|
| Short Circuit Current (A) | Secondary | Min | 3.5 | | | | | |
| | | Max | 5.4 | | | | | |
| | Input | Min | | | | | | 0.1 |
| | | Max | | | | | | 0.5 |
| Open Circuit Voltage (V) | | Min | 110 | | | | | |
| | | Max | 130 | | | | | |
| High Potential Test (V) | | 1 Minute | 1400 | | | | | |
| | | 1 Second | 1700 | | | | | |

## REFERENCE LAMP DATA

| | Test Range | ANSI Standard |
|---|---|---|
| Starting Current (A) | | 3.5 ~ 5.4 |
| CCF | 1.5 | ≤1.8 |
| OCV (V) | 110 ~ 130 | |
| Lamp Watts | WITHIN TRAPEZOID | |
| | | |
| | | |
| | | |

## OPTIONAL FEATURES

(ADD SUFFIX FOR OPTIONS)

| | |
|---|---|
| -WB | With welded bracket |
| -I | With ignitor |
| -DC | With dry film capacitor |
| -OC | With oil filled capacitor |
| -K | With distributor replacement kit (includes bracket, capacitor and ignitor as necessary) |

**Part No.**

# GS150-A-RNA

MAGNETIC

# MAGNETIC HID BALLAST

| | | | |
|---|---|---|---|
| **Ballast Type** | High Pressure Sodium | **Circuit Type** | R-NPF w/o capacitor<br>R-HPF with capacitor |
| **Lamp** | 150W S55 | **Frequency** | 60Hz |

## PHYSICAL DIMENSIONS

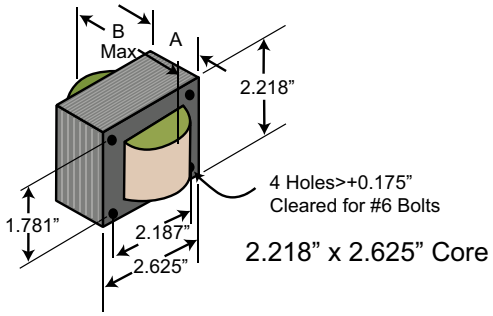


## WIRING DIAGRAM

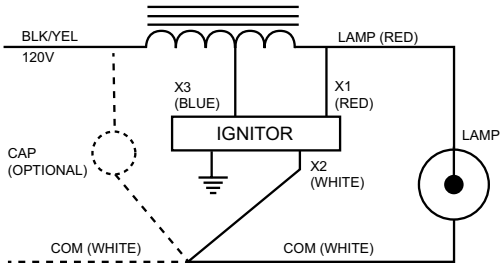


## CAPACITOR

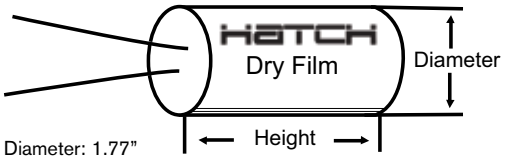


Diameter: 1.77"

Height: 4.6"

## IGNITOR

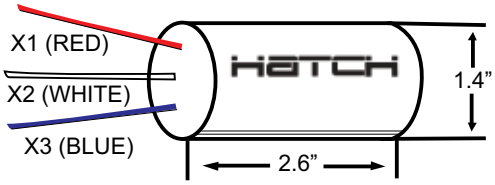


Pulse Height (kV): 2.5 ~ 4.0

Pulse Width (≥ µs): 1.0 @ 2.3kV

RoHS COMPLIANT

c UL us

**2 Year Warranty From Date of Manufacture**

## ELECTRICAL SPECIFICATIONS

| | | | Single Tap | | | | |
|---|---|---|---|---|---|---|---|
| **Input Voltage (V)** | | | **120** | | | | |
| Line Current (A) | Operating (HPF) | | 1.5 | | | | |
| | Operating (NPF) | | 3.1 | | | | |
| | Open Circuit | | 2.5 | | | | |
| | Starting | | 1.8 | | | | |
| Recommended Fuse | | | 6 | | | | |
| Input Voltage At Lamp Dropout | | | 65 | | | | |
| UL Class H 180°C Temp. Code | | | C | | | | |
| Nom. Open Circuit Voltage | | | 120 | | | | |
| Input Power (W) | | | 168 | | | | |
| Power Factor(≥ %) | | | 90 | | | | |
| Regulation (± %) | Line Volts | | 5 | | | | |
| | Lamp Watts | | 10 | | | | |
| Min. Starting Temp | | | -20°F / -30°C | | | | |
| Ballast Dimensions (inches) | | A | 2.36 | | | | |
| | | B | 3.54 | | | | |
| Ballast Net Weight (lbs) | | | 3.25 | | | | |
| Lead Length (inches) | | | 12 | | | | |
| Capacitor | Capacitance (µF) | | 55 | | | | |
| | Min VAC Rating (V) | | 120 | | | | |
| Requires Ignitor Model | | | GHPSR1 | | | | |
| Coil Material (Pri./ Sec.) | | | Al | | | | |

## 60 HZ. TEST PROCEDURES

| | | | | | | | |
|---|---|---|---|---|---|---|---|
| Short Circuit Current (A) | Secondary | Min | 3.5 | | | | |
| | | Max | 5.4 | | | | |
| | Input | Min | 1.0 | | | | |
| | | Max | 3.3 | | | | |
| Open Circuit Voltage (V) | | Min | 110 | | | | |
| | | Max | 130 | | | | |
| High Potential Test (V) | | 1 Minute | 1400 | | | | |
| | | 1 Second | 1700 | | | | |

## REFERENCE LAMP DATA

| | Test Range | ANSI Standard |
|---|---|---|
| Starting Current (A) | | 3.5 ~ 5.4 |
| CCF | 1.5 | ≤ 1.8 |
| OCV (V) | 110 ~ 130 | |
| Lamp Watts | WITHIN TRAPEZOID | |
| | | |
| | | |
| | | |

## OPTIONAL FEATURES

(ADD SUFFIX FOR OPTIONS)

| | |
|---|---|
| -WB | With welded bracket |
| -I | With ignitor |
| -DC | With dry film capacitor |
| -OC | With oil filled capacitor |
| -K | With distributor replacement kit (includes bracket, capacitor and ignitor as necessary) |

HATCH

**PART NO.**
# GS150-MLT-HXCA

MAGNETIC

# MAGNETIC HID BALLAST

| | | | |
|---|---|---|---|
| **Ballast Type** | High Pressure Sodium | **Circuit Type** | HX-HPF |
| **Lamp** | 150W S55 | **Frequency** | 60Hz |

## PHYSICAL DIMENSIONS

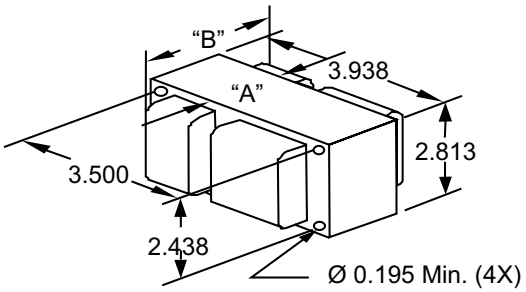


## WIRING DIAGRAM

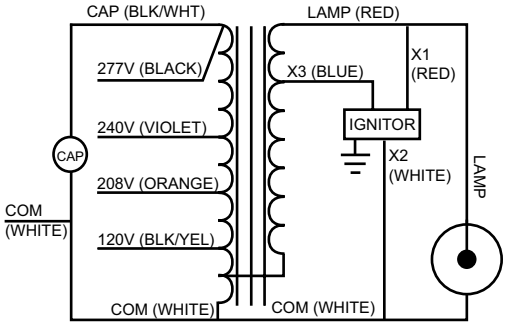


## CAPACITOR

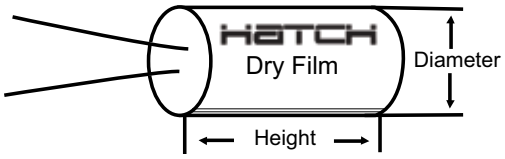


Diameter: 1.38"

Height: 3.17"

## IGNITOR

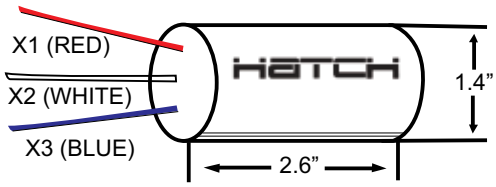


Pulse Height (kV): 2.5 ~ 4.0

Pulse Width (≥ µs): 1.0 @ 2.3kV

RoHS COMPLIANT

c UL us

**2 YEAR WARRANTY FROM DATE OF MANUFACTURE**

## ELECTRICAL SPECIFICATIONS

| | | | Quad Tap | | | | |
|---|---|---|---|---|---|---|---|
| **Input Voltage (V)** | | | **120** | **208** | **240** | **277** | |
| Line Current (A) | Operating | | 1.6 | 0.9 | 0.8 | 0.7 | |
| | Open Circuit | | 3.0 | 1.7 | 1.5 | 1.3 | |
| | Starting | | 1.6 | 0.9 | 0.8 | 0.7 | |
| Recommended Fuse | | | 5 | 3 | 3 | 3 | |
| Input Voltage At Lamp Dropout | | | 85 | 140 | 160 | 185 | |
| UL Class H 180°C Temp. Code | | | D | C | B | B | |
| UL Class N 200°C Temp. Code | | | A | A | A | A | |
| Nom. Open Circuit Voltage | | | 121 | | | | |
| Input Power (W) | | | 182 | | | | |
| Power Factor(≥%) | | | 90 | | | | |
| Regulation (± %) | Line Volts | | 5 | | | | |
| | Lamp Watts | | 10 | | | | |
| Min. Starting Temp | | | -40°F / -40°C | | | | |
| Ballast Dimensions (inches) | | A | 2.56 | | | | |
| | | B | 4.05 | | | | |
| Ballast Net Weight (lbs) | | | 7.4 | | | | |
| Lead Length (inches) | | | 12 | | | | |
| Capacitor | Capacitance (µF) | | 14 | | | | |
| | Min VAC Rating (V) | | 280 | | | | |
| Requires Ignitor Model | | | GHPSR1 | | | | |
| Coil Material (Pri./ Sec.) | | | Cu / Al | | | | |

## 60 HZ. TEST PROCEDURES

| | | | | | | | |
|---|---|---|---|---|---|---|---|
| Short Circuit Current (A) | Secondary | Min | 3.5 | | | | |
| | | Max | 5.4 | | | | |
| | Input | Min | 0.8 | 0.5 | 0.4 | 0.3 | |
| | | Max | 2.3 | 1.4 | 1.1 | 1.0 | |
| Open Circuit Voltage (V) | | Min | 110 | | | | |
| | | Max | 140 | | | | |
| High Potential Test (V) | | 1 Minute | 1600 | | | | |
| | | 1 Second | 1900 | | | | |

## REFERENCE LAMP DATA

| | Test Range | ANSI Standard |
|---|---|---|
| Starting Current (A) | | 3.5 ~ 5.4 |
| CCF | 1.6 | ≤1.8 |
| OCV (V) | 110 ~ 140 | |
| Lamp Watts | WITHIN TRAPEZOID | |

## OPTIONAL FEATURES

(ADD SUFFIX FOR OPTIONS)

| | |
|---|---|
| -WB | With welded bracket |
| -I | With ignitor |
| -DC | With dry film capacitor |
| -OC | With oil filled capacitor |
| -K | With distributor replacement kit (includes bracket, capacitor and ignitor as necessary) |

# HATCH

**PART NO.**
**GS250-ML5-CWCA**

MAGNETIC

## PHYSICAL DIMENSIONS

4 1/4" X 4 3/4" Core

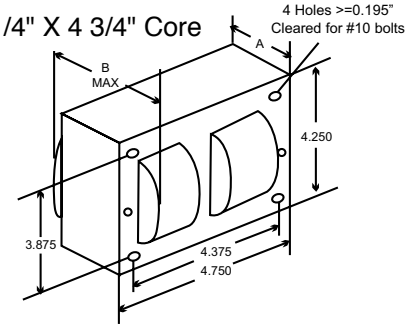


## WIRING DIAGRAM

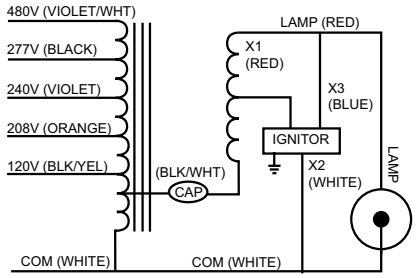


## CAPACITOR

Dry Typ or Oil Oval

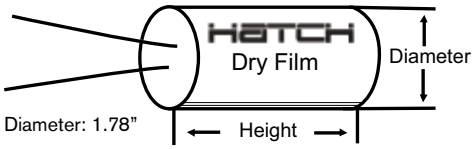


Diameter: 1.78"
Height: 3.15"

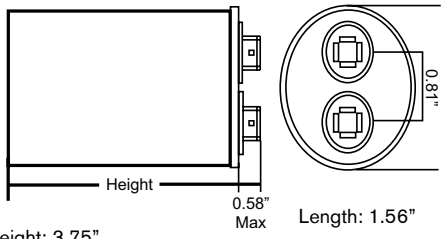


Height: 3.75"
Length: 1.56"
Width: 2.69"

## IGNITOR

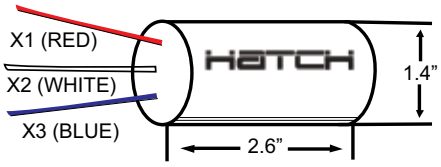


Pulse Height (kV): 2.5 ~ 4.0
Pulse Width ( ≥ μs): 1.0 @ 2.3kV

RoHS COMPLIANT

c UL us

**2 YEAR WARRANTY FROM DATE OF MANUFACTURE**

# MAGNETIC HID BALLAST

| | | | |
|---|---|---|---|
| **Ballast Type** | High Pressure Sodium | **Circuit Type** | HPS CWA |
| **Lamp** | 250W Metal Halide S50 | **Frequency** | 60Hz |

## ELECTRICAL SPECIFICATIONS

| | | Five Tap | | | | |
|---|---|---|---|---|---|---|
| **Input Voltage (V)** | | **120** | **208** | **240** | **277** | **480** |
| Line Current (A) | Operating | 2.6 | 1.5 | 1.3 | 1.1 | 0.6 |
| | Open Circuit | 2.0 | 1.2 | 1.0 | 0.9 | 0.5 |
| | Starting | 1.4 | 0.8 | 0.7 | 0.6 | 0.4 |
| Recommended Fuse | | 7 | 4 | 4 | 3 | 2 |
| Input Voltage At Lamp Dropout | | 65 | 100 | 115 | 130 | 220 |
| UL Class H 180°C Temp. Code | | D | D | C | C | C |
| UL Class N 200°C Temp. Code | | A | A | A | A | A |
| Nom. Open Circuit Voltage | | 185 | | | | |
| Input Power (W) | | 298 | | | | |
| Power Factor( ≥%) | | 90 | | | | |
| Regulation (± %) | Line Volts | 10 | | | | |
| | Lamp Watts | 10 | | | | |
| Min. Starting Temp | | -40°F / -40°C | | | | |
| Ballast Dimensions (inches) | A | 1.97" | | | | |
| | B | 3.9" | | | | |
| Ballast Net Weight (lbs) | | 10.7 | | | | |
| Lead Length (inches) | | 12 | | | | |
| Capacitor | Capacitance (μF) | 35 | | | | |
| | Min VAC Rating (V) | 240 | | | | |
| Requires Ignitor Model | | GHPS24 | | | | |
| Coil Material (Pri./ Sec.) | | Cu / Al | | | | |

## 60 HZ. TEST PROCEDURES

| | | | | | | | |
|---|---|---|---|---|---|---|---|
| Short Circuit Current (A) | Secondary | Min | 3.0 | | | | |
| | | Max | 4.5 | | | | |
| | Input | Min | 0.5 | 0.3 | 0.3 | 0.2 | 0.1 |
| | | Max | 1.6 | 0.9 | 0.8 | 0.7 | 0.4 |
| Open Circuit Voltage (V) | | Min | 175 | | | | |
| | | Max | 210 | | | | |
| High Potential Test (V) | | 1 Minute | 2000 | | | | |
| | | 1 Second | 2400 | | | | |

## REFERENCE LAMP DATA

| | Test Range | ANSI Standard |
|---|---|---|
| Starting Current (A) | | 3.0 ~ 4.5 |
| CCF | 1.4 | ≤1.8 |
| OCV (V) | 175 ~ 210 | |
| Lamp Watts | WITHIN TRAPEZOID | |
| | | |
| | | |
| | | |

## OPTIONAL FEATURES

(ADD SUFFIX FOR OPTIONS)

| | |
|---|---|
| -WB | With welded bracket |
| -I | With ignitor |
| -DC | With dry film capacitor |
| -OC | With oil filled capacitor |
| -K | With distributor replacement kit (includes bracket, capacitor and ignitor as necessary) |

**Part No.**

# GS250-MLT-CWCA

MAGNETIC

## MAGNETIC HID BALLAST

| | | | |
|---|---|---|---|
| **Ballast Type** | High Pressure Sodium | **Circuit Type** | CWA |
| **Lamp** | 250W S50 | **Frequency** | 60Hz |

## PHYSICAL DIMENSIONS

4 1/4" x 4 3/4" Core

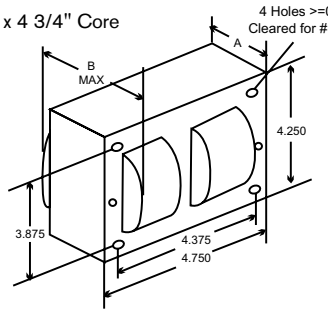


## WIRING DIAGRAM

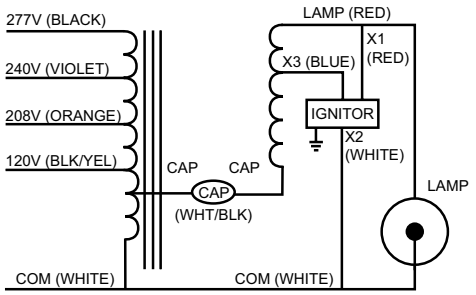


## CAPACITOR

Dry Type or Oil Oval

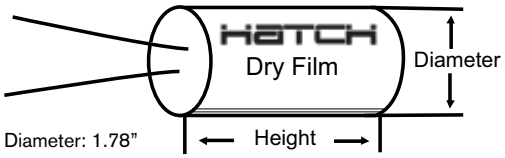


Diameter: 1.78"

Height: 3.15"

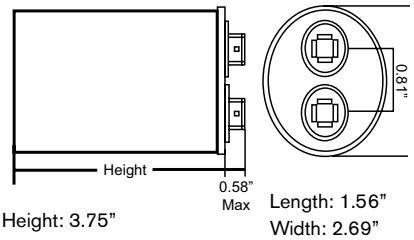


Height: 3.75"

Length: 1.56"

Width: 2.69"

## IGNITOR

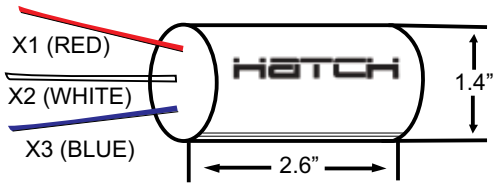


Pulse Height (kV): 2.5 ~ 4.0

Pulse Width (≥ µs): 1.0 @ 2.3kV

RoHS COMPLIANT

c UL us

**2 Year Warranty From Date of Manufacture**

## ELECTRICAL SPECIFICATIONS

| | | | Quad Tap | | | | |
|---|---|---|---|---|---|---|---|
| **Input Voltage (V)** | | | **120** | **208** | **240** | **277** | |
| Line Current (A) | Operating | | 2.5 | 1.5 | 1.3 | 1.1 | |
| | Open Circuit | | 2.0 | 1.2 | 1.0 | 0.9 | |
| | Starting | | 1.4 | 0.8 | 1.0 | 0.6 | |
| Recommended Fuse | | | 7 | 4 | 4 | 3 | |
| Input Voltage At Lamp Dropout | | | 65 | 100 | 1115 | 130 | |
| UL Class H 180°C Temp. Code | | | C | C | B | B | |
| UL Class N 200°C Temp. Code | | | A | A | A | A | |
| Nom. Open Circuit Voltage | | | 185 | | | | |
| Input Power (W) | | | 300 | | | | |
| Power Factor(≥%) | | | 90 | | | | |
| Regulation (± %) | Line Volts | | 10 | | | | |
| | Lamp Watts | | 10 | | | | |
| Min. Starting Temp | | | -40°F / -40°C | | | | |
| Ballast Dimensions (inches) | | A | 1.85 | | | | |
| | | B | 3.5 | | | | |
| Ballast Net Weight (lbs) | | | 9.9 | | | | |
| Lead Length (inches) | | | 12 | | | | |
| Capacitor | Capacitance (µF) | | 35 | | | | |
| | Min VAC Rating (V) | | 240 | | | | |
| Requires Ignitor Model | | | GHPS24 | | | | |
| Coil Material (Pri./ Sec.) | | | Cu / Al | | | | |

## 60 HZ. TEST PROCEDURES

| | | | | | | | |
|---|---|---|---|---|---|---|---|
| Short Circuit Current (A) | Secondary | Min | 3.0 | | | | |
| | | Max | 4.5 | | | | |
| | Input | Min | 0.5 | 0.3 | 0.3 | 0.2 | |
| | | Max | 1.6 | 0.9 | 0.8 | 0.7 | |
| Open Circuit Voltage (V) | | Min | 175 | | | | |
| | | Max | 210 | | | | |
| High Potential Test (V) | | 1 Minute | 2000 | | | | |
| | | 1 Second | 2400 | | | | |

## REFERENCE LAMP DATA

| | Test Range | ANSI Standard |
|---|---|---|
| Starting Current (A) | | 3.0 ~ 4.5 |
| CCF | 1.4 | ≤1.8 |
| OCV (V) | 175 ~ 210 | |
| Lamp Watts | WITHIN TRAPEZOID | |

## OPTIONAL FEATURES

(ADD SUFFIX FOR OPTIONS)

| | |
|---|---|
| -WB | With welded bracket |
| -I | With ignitor |
| -DC | With dry film capacitor |
| -OC | With oil filled capacitor |
| -K | With distributor replacement kit (includes bracket, capacitor and ignitor as necessary) |

HATCH

**PART NO.**
# GS400-ML5-CWCA

MAGNETIC

# MAGNETIC HID BALLAST

| | | | |
|---|---|---|---|
| **Ballast Type** | High Pressure Sodium | **Circuit Type** | HPS CWA |
| **Lamp** | 400W S51 | **Frequency** | 60Hz |

## PHYSICAL DIMENSIONS

4 1/4" x 4 3/4" Core

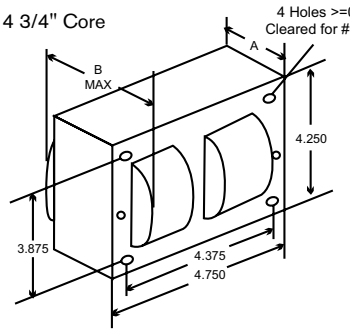


## WIRING DIAGRAM

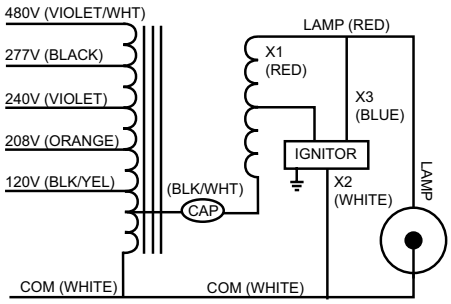


## CAPACITOR

Dry Type or Oil Oval

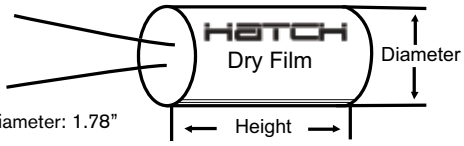


Diameter: 1.78"
Height: 3.15"

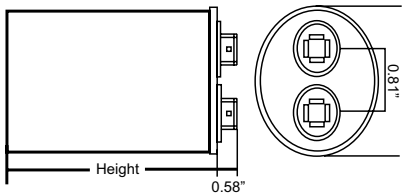


Height: 3.75"

Length: 1.56"
Width: 2.69"

## IGNITOR

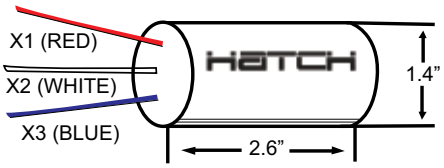


Pulse Height (kV): 2.5 ~ 4.0

Pulse Width (≥ µs): 1.0 @ 2.3kV

RoHS COMPLIANT

c UL us

**2 YEAR WARRANTY FROM DATE OF MANUFACTURE**

## ELECTRICAL SPECIFICATIONS

| | | Five Tap | | | | |
|---|---|---|---|---|---|---|
| **Input Voltage (V)** | | **120** | **208** | **240** | **277** | **480** |
| Line Current (A) | Operating | 3.8 | 2.2 | 1.9 | 1.6 | 0.9 |
| | Open Circuit | 2.0 | 1.2 | 1.0 | 0.9 | 0.5 |
| | Starting | 3.1 | 1.8 | 1.6 | 1.4 | 0.8 |
| Recommended Fuse | | 10 | 7 | 5 | 5 | 3 |
| Input Voltage At Lamp Dropout | | 70 | 125 | 135 | 150 | 250 |
| UL Class H 180°C Temp. Code | | E | E | E | D | D |
| UL Class N 200°C Temp. Code | | A | A | A | A | A |
| Nom. Open Circuit Voltage | | 185 | | | | |
| Input Power (W) | | 450 | | | | |
| Power Factor( ≥ %) | | 90 | | | | |
| Regulation (± %) | Line Volts | 10 | | | | |
| | Lamp Watts | 10 | | | | |
| Min. Starting Temp | | -40°F / -40°C | | | | |
| Ballast Dimensions (inches) | A | 2.56 | | | | |
| | B | 4.7 | | | | |
| Ballast Net Weight (lbs) | | 13.5 | | | | |
| Lead Length (inches) | | 12 | | | | |
| Capacitor | Capacitance (µF) | 55 | | | | |
| | Min VAC Rating (V) | 240 | | | | |
| Requires Ignitor Model | | GHPS24 | | | | |
| Coil Material (Pri./ Sec.) | | Cu / Al | | | | |

## 60 HZ. TEST PROCEDURES

| | | | | | | | |
|---|---|---|---|---|---|---|---|
| Short Circuit Current (A) | Secondary | Min | 4.6 | | | | |
| | | Max | 7.5 | | | | |
| | Input | Min | 1.5 | 0.8 | 0.7 | 0.6 | 0.4 |
| | | Max | 4.5 | 2.6 | 2.2 | 2.0 | 1.1 |
| Open Circuit Voltage (V) | | Min | 175 | | | | |
| | | Max | 210 | | | | |
| High Potential Test (V) | | 1 Minute | 2000 | | | | |
| | | 1 Second | 2400 | | | | |

## REFERENCE LAMP DATA

| | Test Range | ANSI Standard |
|---|---|---|
| Starting Current (A) | | 4.6 ~ 7.5 |
| CCF | 1.4 | ≤ 1.8 |
| OCV (V) | 175 ~ 210 | |
| Lamp Watts | WITHIN TRAPEZOID | |
| | | |
| | | |
| | | |

## OPTIONAL FEATURES

(ADD SUFFIX FOR OPTIONS)

| | |
|---|---|
| -WB | With welded bracket |
| -I | With ignitor |
| -DC | With dry film capacitor |
| -OC | With oil filled capacitor |
| -K | With distributor replacement kit (includes bracket, capacitor and ignitor as necessary) |

**Part No.**

# GS400-MLT-CWCA

MAGNETIC

# MAGNETIC HID BALLAST

| | | | |
|---|---|---|---|
| **Ballast Type** | High Pressure Sodium | **Circuit Type** | HPS CWA |
| **Lamp** | 400W S51 | **Frequency** | 60Hz |

## PHYSICAL DIMENSIONS

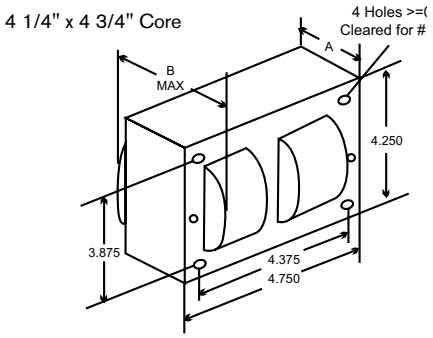


## WIRING DIAGRAM

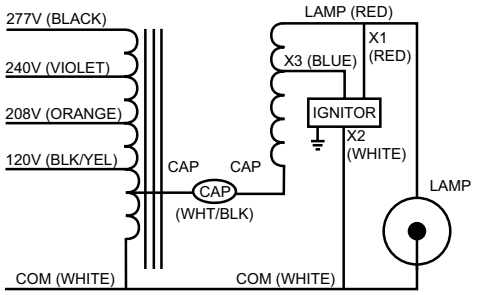


## CAPACITOR

Dry Type or Oil Oval

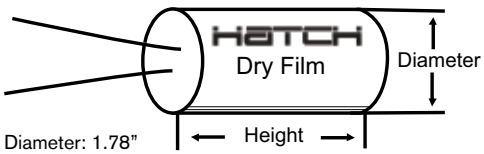


Diameter: 1.78”

Height: 3.15”

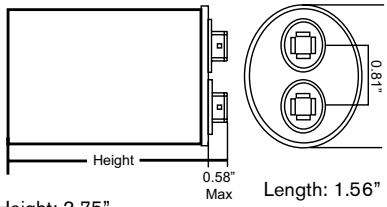


Height: 3.75”

Length: 1.56”

Width: 2.69”

## IGNITOR

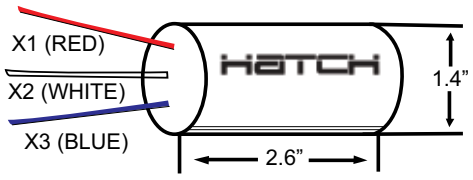


Pulse Height (kV): 2.5 ~ 4.0

Pulse Width (≥ µs): 1.0 @ 2.3kV

RoHS COMPLIANT

c UL us

**2 Year Warranty From Date of Manufacture**

## ELECTRICAL SPECIFICATIONS

| | | | Quad Tap | | | | |
|---|---|---|---|---|---|---|---|
| **Input Voltage (V)** | | | **120** | **208** | **240** | **277** | |
| Line Current (A) | Operating | | 3.8 | 2.2 | 1.9 | 1.7 | |
| | Open Circuit | | 1.7 | 1.0 | 0.9 | 0.8 | |
| | Starting | | 3.3 | 1.9 | 1.7 | 1.4 | |
| Recommended Fuse | | | 10 | 7 | 5 | 5 | |
| Input Voltage At Lamp Dropout | | | 65 | 120 | 130 | 145 | |
| UL Class H 180°C Temp. Code | | | D | D | D | D | |
| UL Class N 200°C Temp. Code | | | A | A | A | A | |
| Nom. Open Circuit Voltage | | | 182 | | | | |
| Input Power (W) | | | 453 | | | | |
| Power Factor(≥%) | | | 90 | | | | |
| Regulation (± %) | Line Volts | | 10 | | | | |
| | Lamp Watts | | 10 | | | | |
| Min. Starting Temp | | | -40°F / -40°C | | | | |
| Ballast Dimensions (inches) | | A | 2.32 | | | | |
| | | B | 4.18 | | | | |
| Ballast Net Weight (lbs) | | | 12.4 | | | | |
| Lead Length (inches) | | | 12 | | | | |
| Capacitor | Capacitance (µF) | | 55 | | | | |
| | Min VAC Rating (V) | | 240 | | | | |
| Requires Ignitor Model | | | GHPS24 | | | | |
| Coil Material (Pri./ Sec.) | | | Cu / Al | | | | |

## 60 HZ. TEST PROCEDURES

| | | | | | | | |
|---|---|---|---|---|---|---|---|
| Short Circuit Current (A) | Secondary | Min | 4.6 | | | | |
| | | Max | 7.5 | | | | |
| | Input | Min | 1.6 | 0.9 | 0.8 | 0.7 | |
| | | Max | 4.8 | 2.7 | 2.4 | 2.1 | |
| Open Circuit Voltage (V) | | Min | 175 | | | | |
| | | Max | 210 | | | | |
| High Potential Test (V) | | 1 Minute | 2000 | | | | |
| | | 1 Second | 2400 | | | | |

## REFERENCE LAMP DATA

| | Test Range | ANSI Standard |
|---|---|---|
| Starting Current (A) | | 4.6 ~ 7.5 |
| CCF | 1.5 | ≤1.8 |
| OCV (V) | 175 ~ 210 | |
| Lamp Watts | WITHIN TRAPEZOID | |

## OPTIONAL FEATURES

(ADD SUFFIX FOR OPTIONS)

| | |
|---|---|
| -WB | With welded bracket |
| -I | With ignitor |
| -DC | With dry film capacitor |
| -OC | With oil filled capacitor |
| -K | With distributor replacement kit (includes bracket, capacitor and ignitor as necessary) |

# hatch

**Part No.**
**GS1000-ML5-CWCA**
MAGNETIC

## PHYSICAL DIMENSIONS

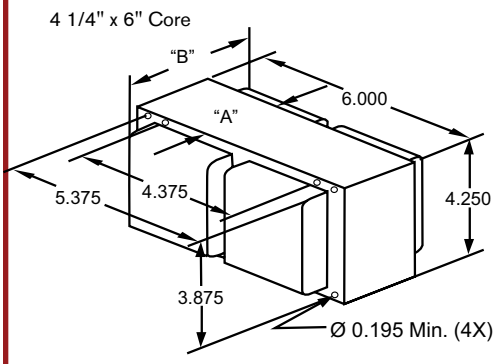


## WIRING DIAGRAM

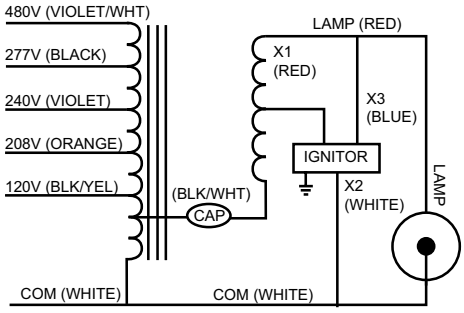


## CAPACITOR

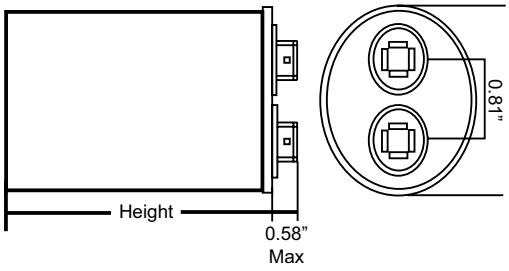


Height: 2.88"

Length: 1.97"
Width: 3.66"

## IGNITOR

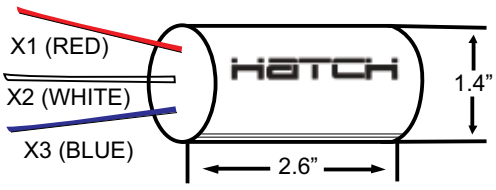


Pulse Height (kV): 3.0 ~ 5.0

Pulse Width (≥ µs): 4.0 @ 2.7kV

RoHS COMPLIANT

c UL us

**2 Year Warranty From Date of Manufacture**

# MAGNETIC HID BALLAST

| | | | |
|---|---|---|---|
| **Ballast Type** | High Pressure Sodium | **Circuit Type** | HPS CWA |
| **Lamp** | 1000W S52 | **Frequency** | 60Hz |

## ELECTRICAL SPECIFICATIONS

| | | Five Tap | | | | |
|---|---|---|---|---|---|---|
| **Input Voltage (V)** | | **120** | **208** | **240** | **277** | **480** |
| Line Current (A) | Operating | 9.7 | 5.6 | 4.9 | 4.2 | 2.4 |
| | Open Circuit | 7.1 | 4.1 | 3.6 | 3.1 | 1.8 |
| | Starting | 6.3 | 3.4 | 3.1 | 2.7 | 1.5 |
| Recommended Fuse | | 25 | 15 | 12 | 10 | 6 |
| Input Voltage At Lamp Dropout | | 70 | 125 | 135 | 150 | 250 |
| UL Class H 180°C Temp. Code | | E | D | D | D | C |
| UL Class N 200°C Temp. Code | | A | A | A | A | A |
| Nom. Open Circuit Voltage | | 430 | | | | |
| Input Power (W) | | 1070 | | | | |
| Power Factor( ≥%) | | 90 | | | | |
| Regulation (± %) | Line Volts | 10 | | | | |
| | Lamp Watts | 10 | | | | |
| Min. Starting Temp | | -40°F / -40°C | | | | |
| Ballast Dimensions (inches) | A | 4.1 | | | | |
| | B | 6.1 | | | | |
| Ballast Net Weight (lbs) | | 26.0 | | | | |
| Lead Length (inches) | | 12 | | | | |
| Capacitor | Capacitance (µF) | 26 | | | | |
| | Min VAC Rating (V) | 525 | | | | |
| Requires Ignitor Model | | GHPS1K | | | | |
| Coil Material (Pri./ Sec.) | | Cu / Al | | | | |

## 60 HZ. TEST PROCEDURES

| | | | | | | | |
|---|---|---|---|---|---|---|---|
| Short Circuit Current (A) | Secondary | Min | 4.7 | | | | |
| | | Max | 8.0 | | | | |
| | Input | Min | 2.7 | 1.6 | 1.4 | 1.2 | 0.7 |
| | | Max | 8.2 | 4.8 | 4.1 | 3.5 | 2.0 |
| Open Circuit Voltage (V) | | Min | 400 | | | | |
| | | Max | 480 | | | | |
| High Potential Test (V) | | 1 Minute | 2000 | | | | |
| | | 1 Second | 2400 | | | | |

## REFERENCE LAMP DATA

| | Test Range | ANSI Standard |
|---|---|---|
| Starting Current (A) | | 4.7 ~ 8.0 |
| CCF | 1.6 | ≤1.8 |
| OCV (V) | 400 ~ 480 | |
| Lamp Watts | WITHIN TRAPEZOID | |
| | | |
| | | |
| | | |

## OPTIONAL FEATURES

(ADD SUFFIX FOR OPTIONS)

| | |
|---|---|
| -WB | With welded bracket |
| -I | With ignitor |
| -DC | With dry film capacitor |
| -OC | With oil filled capacitor |
| -K | With distributor replacement kit (includes bracket, capacitor and ignitor as necessary) |

# AC LED Drivers
## 15/30/60 WATTS

NEW RS LED SERIES

# ELECTRONIC RS LED SERIES
## No Minimum Load - Full Range Dimming

## SPECIFICATIONS

| | |
|---|---|
| **Input Voltage** | 120VAC, 230VAC, 277VAC |
| **Input Frequency** | 50/60Hz |
| **Nominal Output Voltage** | 12VAC |
| **Power Factor** | 0.90 |
| **Ambient Temp.** | -20° - +50°C |
| **Max. Case Temp. (Tc)** | 90°C |
| **Class 2** | Yes (Isolated Secondary) |
| **Dimming** | Yes |
| **Short Circuit Protection** | Yes |
| **Case Material** | Aluminum |

## FEATURES

1) Suitable for use with AC LED
2) Suitable for use with Halogen
3) Broader lamp compatibility
4) Broader dimmer compatibility
5) Recommended ELV dimming
6) Now available in 230V & 277V

## PHYSICAL DIMENSIONS

**1.** Side Lead

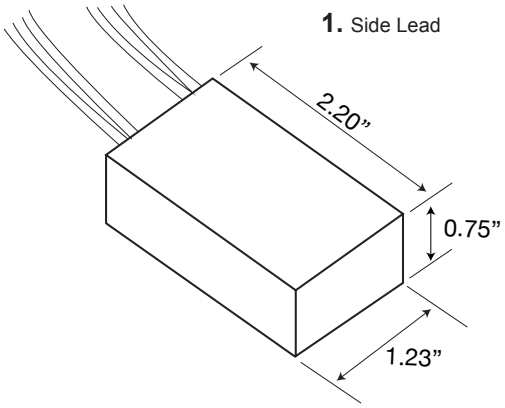


**2.** Bottom Lead

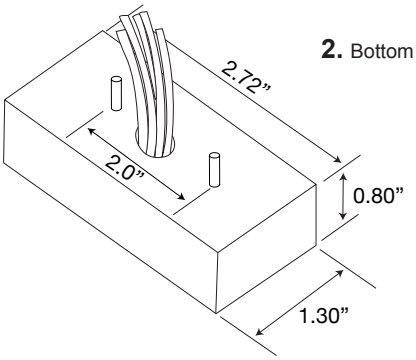


Dimensions: +/- 0.02”

## WIRING SPECIFICATIONS

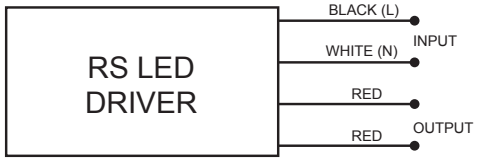


Leads: 6”, AWG#18 stranded, 300V, 105°C

## REGULATORY APPROVALS

- RoHS Compliant
- UL8750 Compliant

| Max Watts | Input Volts | Input Amps | Nominal Output Volts | Max Output Amps | Case Style | Hatch Part No. |
|---|---|---|---|---|---|---|
| 15 | 120 | 0.15 | 12 | 1.30 | 1 | RS12-15M-LED |
| | | | | | 2 | RS12-15BF-LED |
| | 230 | 0.08 | 12 | 1.30 | 1 | RS12-15M-LED-230 |
| | | | | | 2 | RS12-15BF-LED-230 |
| | 277 | 0.07 | 12 | 1.30 | 1 | RS12-15M-LED-277 |
| | | | | | 2 | RS12-15BF-LED-277 |
| 30 | 120 | 0.30 | 12 | 2.50 | 1 | RS12-30M-LED |
| | | | | | 2 | RS12-30BF-LED |
| | 230 | 0.16 | 12 | 2.50 | 1 | RS12-30M-LED-230 |
| | | | | | 2 | RS12-30BF-LED-230 |
| | 277 | 0.13 | 12 | 2.50 | 1 | RS12-30M-LED-277 |
| | | | | | 2 | RS12-30BF-LED-277 |
| 60 | 120 | 0.60 | 12 | 5.00 | 1 | RS12-60M-LED |
| | | | | | 2 | RS12-60BF-LED |
| | 230 | 0.31 | 12 | 5.00 | 1 | RS12-60M-LED-230 |
| | | | | | 2 | RS12-60BF-LED-230 |
| | 277 | 0.26 | 12 | 5.00 | 1 | RS12-60M-LED-277 |
| | | | | | 2 | RS12-60BF-LED-277 |

## PACKING INFORMATION

Carton Quantity: 100 count

Carton Weight: 9lbs 15.2oz

Unit Weight: 2.4oz

Please refer to LED product manufacturer data sheets for compatibility with the RS LED products. Hatch does not perform compatibility and/or dimmer compatibility testing with other manufacturers LED lamp products. See lamp manufacturers listings of approval of their products with our drivers.

# ELECTRONIC KNOCKOUT TRANSFORMER

**Part No.**
**RS12-60KO-LED**
60 Watt Enclosed Transformer Class 2

| | |
|---|---|
| **Input Voltage** | 120VAC - 50-60Hz |
| **Output** | 12 VAC |
| **Input Current** | .2A |
| **Weight** | 9.8 oz. |
| **Power Factor** | > 0.90 |
| **Operating Frequency** | 30KHz |
| **Total Harmonic Distortion** | < 20% |
| **Input** | 6", 18AWG stranded, 125 degree C stripped 3/8" tinned |
| **Output** | 6", 18AWG stranded, 125 degree C stripped 3/8" tinned |

## TRANSFORMER OPERATING SPECIFICATIONS:

| | |
|---|---|
| **Maximum Transformer Case Temperature** | 85°C |
| **Minimum Starting Temperature** | -20°C |
| **Sound Rating** | A+ |
| **Operating Humidity** | 95% relative humidity, non-condensating |
| **Environmental Protection** | Epoxy Sealed for moisture resistance and shock/vibration resistance |

## PRODUCT FEATURES :

- **No minimum load**
- High Reliability
- Moisture Resistant
- No audible noise
- Low Harmonic Distortion
- High power factor
- Lightweight, compact design
- Small case size
- Dimmable. Electronic Low Voltage dimmers are recomended for optimum performance
- Case material: Metal
- Hatch RS A/C LED drivers can also operate 12V Halogen Lamps

## APPROVALS:

-ETL listed system
-Class P, Type 1, Outdoors
- UL 1310 Compliant

Intertek

RoHS COMPLIANT

## ELECTRICAL FEATURES:

**Short-Circuit Protection**

All Hatch low-voltage transformers employ our (ESP) Electronic Short Circuit Protection. The ESP sensing circuit will instantly shut down the output before any of the components are stressed if a short circuit or over load is detected. The transformer will automatically reset as soon as the fault is corrected.

## HARDWIRE ELECTRONIC

| Hatch Part Number | Max Watts | Input Volts | Input Amps. | Output Volts | Output Amps | Color | Case Quantity | Safety Listing |
|---|---|---|---|---|---|---|---|---|
| RS12-60KO-LED | 60 | 120 | .60 | 12 | 5.0 | Black | 24/Case | ETL Listed (Class 2) |

## DIMENSIONS:

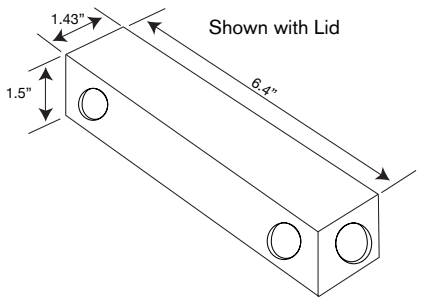


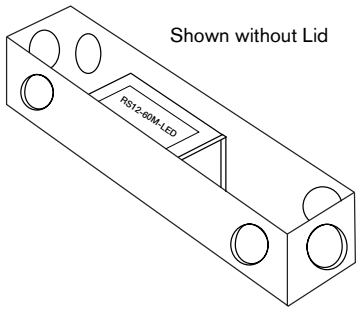


Note: Three (3) 3/4" knockouts on each end of case.

**Ground wire is attached with lug and nut to the inside of the enclosure**

## WIRING DIAGRAM:

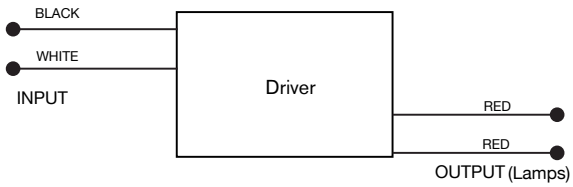


Please refer to LED product manufacturer data sheets for compatibility with the RS LED products. Hatch does not perform compatibility and/or dimmer compatibility testing with other manufacturers LED lamp products. See lamp manufacturers listings of approval of their products with our drivers.

# 4W | Constant Current

## GENERAL INFORMATION

| | |
|---|---|
| **LED Driver Type** | Constant Current (Class 2) |
| **Maximum Wattage** | 4 Watts |
| **Input Voltage** | 120 - 277 VAC ± 10% Universal |
| **Input Frequency** | 50/60Hz |

## CASE STYLE: POLYCARBONATE

## ELECTRICAL SPECIFICATIONS

| Watts | Rated Current | Output Voltage | Dimming Type | Input Voltage | Input Current | Power Factor | Efficiency | Hatch Part Number |
|---|---|---|---|---|---|---|---|---|
| 4W | 350mA | 8-13V | Non-Dimming | 120 - 277 VAC | 0.12/0.06A | >0.40 | 73% | LCA004-UNV |
| | 700mA | 2.8-6.5V | Non-Dimming | 120 - 277 VAC | 0.12/0.06A | >0.40 | 73% | LCB004-UNV |

## PRODUCT FEATURES

- Short circuit and overload protection
- Over temperature protection
- Suitable for dry and damp locations
- Withstanding voltage: I/P – O/P 2kVAC
- Operating temperature range: -20°C to 85°C (measured at Tcase)

## APPROVALS

- UL 1310 compliant
- EN61000-3-2

TYPE TL

## MECHANICAL SPECIFICATIONS

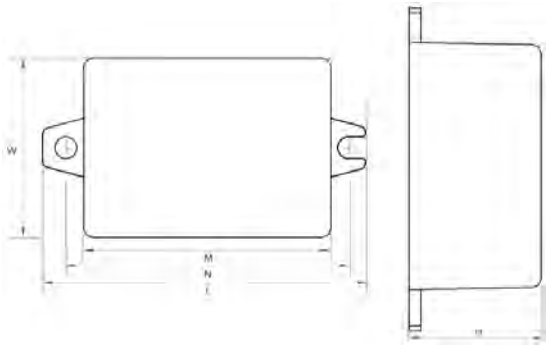

L = 1.93in (49mm) M = 1.48in (37.5mm) N = 1.69in (42.9mm)

W = 1.07in (27.2mm) H = 0.79in (20mm)

## WIRING INFORMATION

| | |
|---|---|
| Input: | 12", Black (L), White (N) #18AWG |
| Output: | 12", Red (+), Black (-) #18AWG |

## PACKAGING INFORMATION

| | |
|---|---|
| Weight: | 4.1oz |
| Quantity: | 200pc/carton |

## WARRANTY

- 5 year limited warranty

# 8W Constant Current

## GENERAL INFORMATION

| | |
|---|---|
| **LED Driver Type** | Constant Current (Class 2) |
| **Maximum Wattage** | 8.4 Watts |
| **Input Voltage** | 120 - 277 VAC ± 10% Universal |
| **Input Frequency** | 50/60Hz |
| **Total Harmonic Distortion** | <20% |

## CASE STYLE: POLYCARBONATE

## ELECTRICAL SPECIFICATIONS

| Watts | Rated Current | Output Voltage | Dimming Type | Input Voltage | Input Current | Power Factor | Efficiency | Hatch Part Number |
|---|---|---|---|---|---|---|---|---|
| 8W | 350mA | 9-24V | Non-Dimming | 120 - 277 VAC | 0.12/0.06A | >0.90 | 80% | LCA009-RL-UNV |
| | 700mA | 6-12V | Non-Dimming | 120 - 277 VAC | 0.13/0.06A | >0.90 | 80% | LCB009-RL-UNV |

## PRODUCT FEATURES

- Short circuit and overload protection
- Over temperature protection
- Suitable for dry and damp locations
- Withstanding voltage: I/P – O/P 2kVAC
- Operating temperature range: -20°C to 80°C (measured at Tcase)

## APPROVALS

- UL 8750 recognized component
- EN61000-3-2

## MECHANICAL SPECIFICATIONS

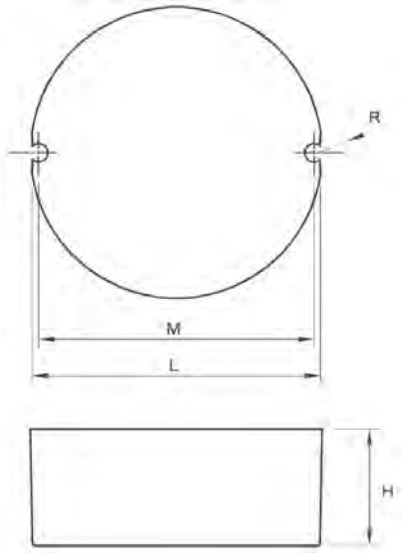


L = 2.17in (55mm) M = 2.05in (52mm)

H = 0.87in (22mm) R = 0.07in (1.7mm)

## WIRING INFORMATION

| | |
|---|---|
| Input: | 12", Black (L), White (N) #18AWG |
| Output: | 12", Red (+), Black (-) #18AWG |

## PACKAGING INFORMATION

| | |
|---|---|
| Weight: | 4.1oz |
| Quantity: | 100pc/carton |

## WARRANTY

- 5 year limited warranty

# 10W Constant Current Case Style A

## GENERAL INFORMATION

| | |
|---|---|
| **LED Driver Type** | Constant Current (Class2) |
| **Maximum Wattage** | 10 Watts |
| **Input Voltage** | 120 VAC ± 10% Dedicated |
| **Input Frequency** | 50/60Hz |

## CASE STYLE A: POLYCARBONATE

## ELECTRICAL SPECIFICATIONS

| Watts | Rated Current | Output Voltage | Dimming Type | Input Voltage | Input Power | Input Current | Power Factor | Efficiency | Hatch Part Number |
|---|---|---|---|---|---|---|---|---|---|
| **Non-Dimming Models** | | | | | | | | | |
| 10W | 300mA | 6 - 33 VDC | Non-Dimming | 120 VAC | 13W | 0.30A | >0.50 | 77% | LC10-0300N-120-A |
| | 330mA | 9 - 30 VDC | Non-Dimming | 120 VAC | 13W | 0.21A | >0.50 | 77% | LC10-0330N-120-A |
| | 350mA | 8 - 30 VDC | Non-Dimming | 120 VAC | 13W | 0.21A | >0.50 | 77% | LC10-0350N-120-A |
| | 380mA | 7 - 28 VDC | Non-Dimming | 120 VAC | 13W | 0.21A | >0.50 | 74% | LC10-0380N-120-A |

## PRODUCT FEATURES

- Short circuit and overload protection
- Suitable for dry and damp locations
- Withstanding voltage: I/P - O/P 2kVAC
- Minimum start temp: -40°C
- Surge voltage rating: L-N 2kV

## APPROVALS

- UL 8750 recognized component
- EN61000-3-2
- EMC: Meets FCC47 CFR Part 15 (Class B) consumer limits

## MECHANICAL SPECIFICATIONS: CASE STYLE A

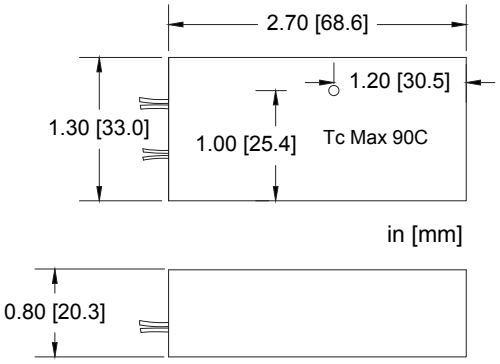


## DIMENSIONS [IN/MM]

| | |
|---|---|
| Length: | 2.70 [68.6] |
| Width: | 1.30 [33.0] |
| Height: | 0.80 [20.3] |

## WIRING INFORMATION

| | |
|---|---|
| Input: | 12”, Black (L), White (N) #18AWG |
| Output: | 12”, Red (+), Blue (-) #18AWG |

## PACKAGING INFORMATION

| | |
|---|---|
| Weight: | 3.5oz |
| Quantity: | 100pc/carton |

## WARRANTY

- 5 year limited warranty

## RELATED PRODUCT

- Case Style C - 4.8” x 1.3” x 0.8”

# 10W | Constant Current Case Style C

## GENERAL INFORMATION

| | |
|---|---|
| **LED Driver Type** | Constant Current (Class 2) |
| **Maximum Wattage** | 10 Watts |
| **Input Voltage** | 120 VAC ± 10% Dedicated |
| **Input Frequency** | 50/60Hz |
| **Total Harmonic Distortion** | <20% |

## CASE STYLE C: POLYCARBONATE

## ELECTRICAL SPECIFICATIONS

| Watts | Rated Current | Output Voltage | Dimming Type | Input Voltage | Input Power | Input Current | Power Factor | Efficiency | Hatch Part Number |
|---|---|---|---|---|---|---|---|---|---|
| **Dimming Models** | | | | | | | | | |
| 10W | 300mA | 5 - 33 VDC | Phase Dimming | 120 VAC | 15W | 0.12A | >0.90 | 77% | LC10-0300P-120-C |

## PRODUCT FEATURES

- Short circuit and overload protection
- Over temperature protection
- Suitable for dry and damp locations
- Withstanding voltage: I/P - O/P 2kVAC
- Minimum start temp: -40°C
- Surge voltage rating: L-N 2kV

## APPROVALS

- UL 8750 recognized compnent
- EN61000-3-2
- EMC: Meets FCC47 CFR Part 15 (Class B) consumer limits

## MECHANICAL SPECIFICATIONS: CASE STYLE C

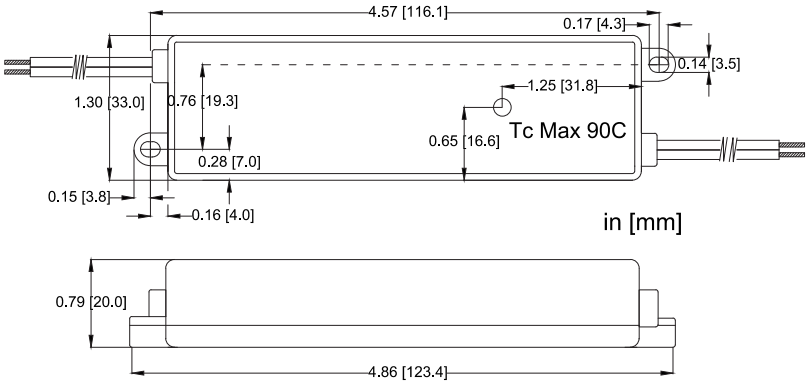


## DIMENSIONS [IN/MM]

| | |
|---|---|
| Length: | 4.57 [116.1] |
| Mounting: | 4.86 [123.4] |
| Width: | 1.30 [33.0] |
| Height: | 0.79 [20.0] |

## WIRING INFORMATION

| | |
|---|---|
| Input: | 12”, Black (L), White (N) #18AWG |
| Output: | 12”, Red (+), Blue (-) #18AWG |

## PACKAGING INFORMATION

| | |
|---|---|
| Weight: | 4.1oz |
| Quantity: | 40pc/carton |

## WARRANTY

- 5 year limited warranty

## RELATED PRODUCT

- Case Style A: 2.7” x 1.3” x 0.8”

# 12W | Constant Current Case Style B

## GENERAL INFORMATION

| | |
|---|---|
| **LED Driver Type** | Constant Current (Class 2) |
| **Maximum Wattage** | 12 Watts |
| **Input Voltage** | 120 VAC ± 10% Dedicated |
| **Input Frequency** | 50/60Hz |
| **Total Harmonic Distortion** | <20% |

## CASE STYLE B: POLYCARBONATE

## ELECTRICAL SPECIFICATIONS

| Watts | Rated Current | Output Voltage | Dimming Type | Input Voltage | Input Power | Input Current | Power Factor | Efficiency | Hatch Part Number |
|---|---|---|---|---|---|---|---|---|---|
| **Dimming Options** | | | | | | | | | |
| 12W | *260mA | 23-46 VDC | Phase Dimming | 120 VAC | 14W | 0.13A | >0.90 | 78% | *LC12-0260P-120-B |
| | 350mA | 17-34 VDC | Phase Dimming | 120 VAC | 15W | 0.13A | >0.90 | 75% | LC12-0350P-120-B |
| | 500mA | 12-24 VDC | Phase Dimming | 120 VAC | 15W | 0.13A | >0.90 | 77% | LC12-0500P-120-B |
| | 700mA | 8-17 VDC | Phase Dimming | 120 VAC | 15W | 0.13A | >0.90 | 77% | LC12-0700P-120-B |
| | 400mA | 5-30 VDC | Local Dimming | 120 VAC | 15W | 0.13A | >0.70 | 77% | LC12-0400L-120-B |

*Class 2 US ONLY

## PRODUCT FEATURES

- Short circuit and overload protection
- Suitable for dry and damp locations
- Withstanding voltage: L-N 2kV
- Operating temperature range: -40°C to 90°C (measured at Tcase)
- MTBF: 570,000 hours @ 40°C ambient (~70°C case temp)
- Inrush Current: <20A Max @120VAC, cold start 25°C

## APPROVALS

- UL 8750 recognized component
- EN61000-3-2
- EMC: Meets FCC47 CFR Part 15 (Class B) consumer limits

## MECHANICAL SPECIFICATIONS: CASE STYLE B

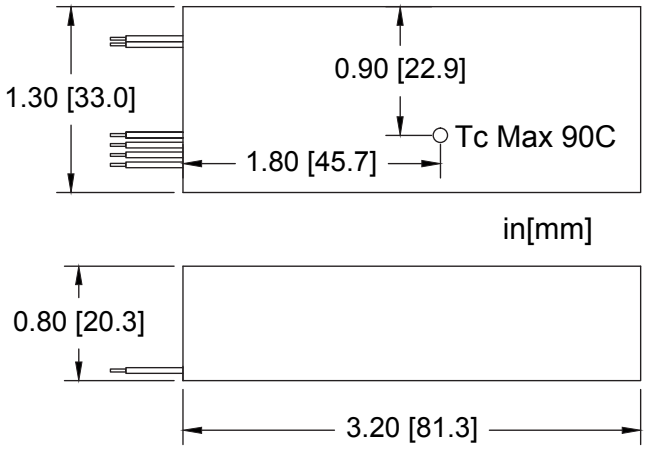


## DIMENSIONS [IN/MM]

| | |
|---|---|
| Length: | 3.20 [81.3] |
| Width: | 1.30 [33.0] |
| Height: | 0.80 [20.3] |

## WIRING INFORMATION

| | |
|---|---|
| Input: | 12”, Black (L), White (N) #18AWG |
| Output: | 12”, Red (+), Blue (-) #18AWG |
| Dimming: | (Local Dimming) 12”, Yellow(+), Yellow (-) # 18AWG |

## PACKAGING INFORMATION

| | |
|---|---|
| Weight: | 4.0 oz |
| Quantity: | 160pc/carton |

## WARRANTY

- 5 year limited warranty

## RELATED PRODUCTS

- Case Style Y: 3.3” x 1.0” x 0.5”
- Case Style C: 4.8” x 1.3” x 0.8”

# 12W | Constant Current Case Style B

## GENERAL INFORMATION

| | |
|---|---|
| **LED Driver Type** | Constant Current (Class 2) |
| **Maximum Wattage** | 12 Watts |
| **Input Voltage** | 120 VAC ± 10% Dedicated |
| **Input Frequency** | 50/60Hz |
| **Total Harmonic Distortion** | <20% |

## CASE STYLE B: POLYCARBONATE

## PERFORMANCE CURVES

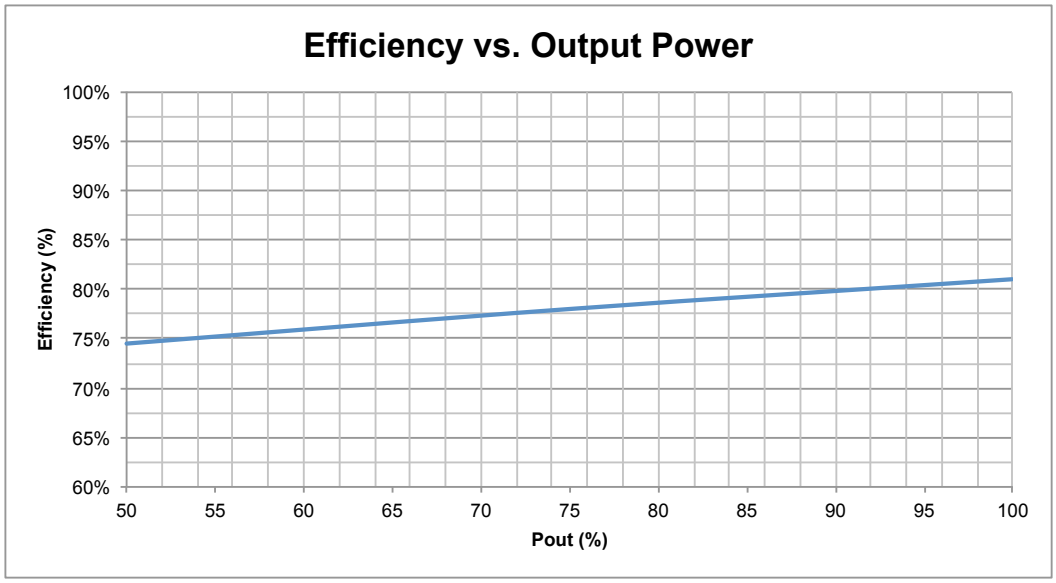


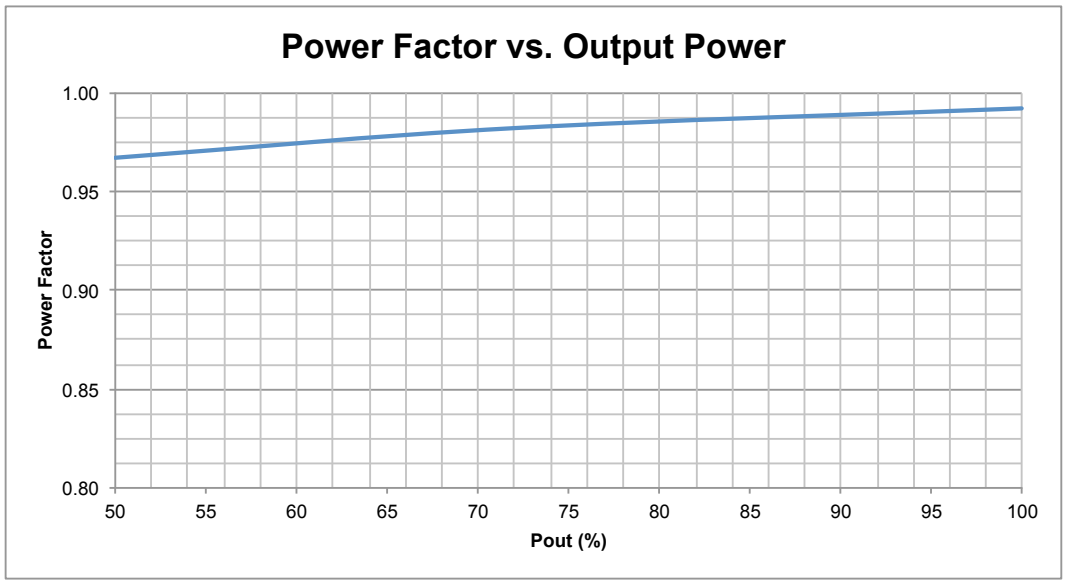


Efficiency and PF measured at 25°C.
Measurements made on model LC12-0220P-120-B.

# 12W | Constant Current Case Style B

## GENERAL INFORMATION

| | |
|---|---|
| **LED Driver Type** | Constant Current (Class 2) |
| **Maximum Wattage** | 12 Watts |
| **Input Voltage** | 120 VAC ± 10% Dedicated |
| **Input Frequency** | 50/60Hz |
| **Total Harmonic Distortion** | <20% |

## CASE STYLE B: POLYCARBONATE

## PERFORMANCE CURVES

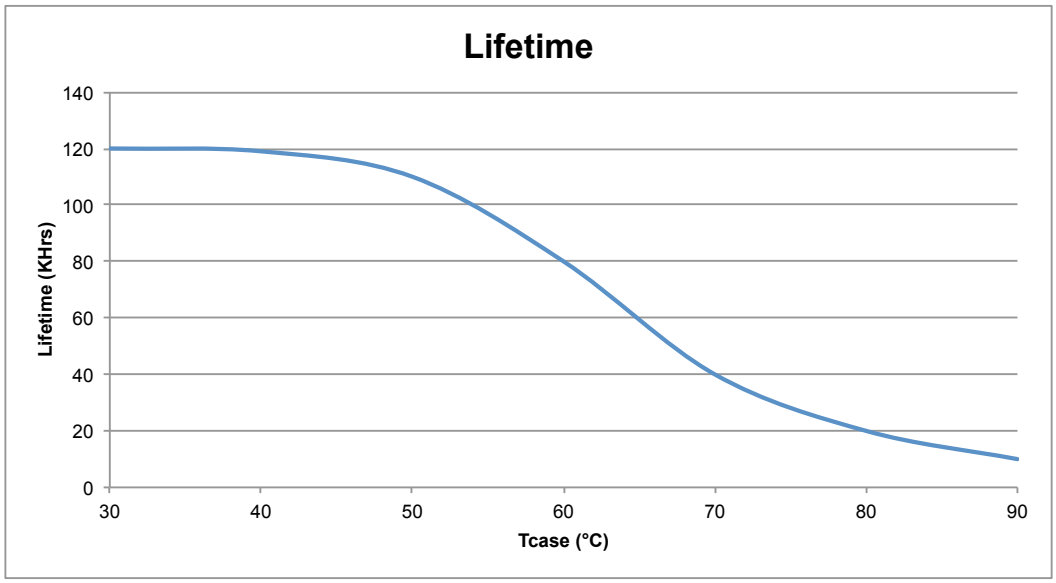


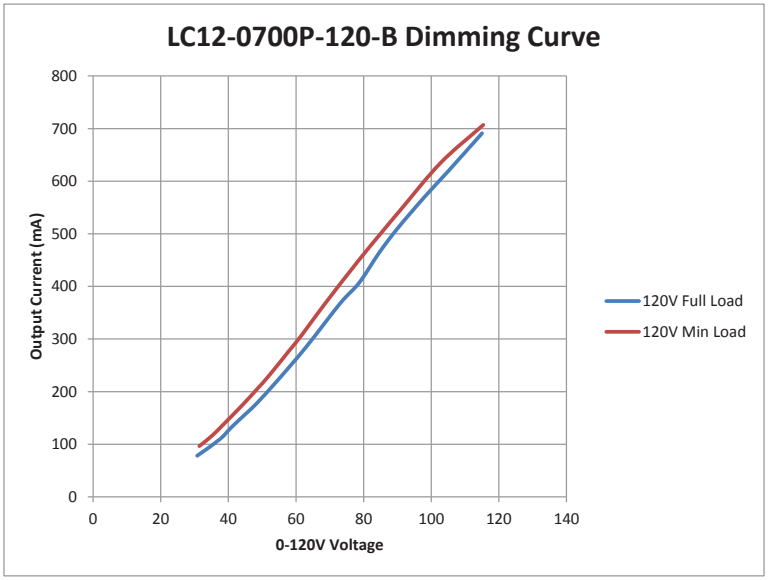

# 12W | Constant Current Case Style C

## GENERAL INFORMATION

| | |
|---|---|
| **LED Driver Type** | Constant Current (Class 2) |
| **Maximum Wattage** | 12 Watts |
| **Input Voltage** | 120 VAC ± 10% Dedicated |
| **Input Frequency** | 50/60Hz |
| **Total Harmonic Distortion** | <20% |

## CASE STYLE C: POLYCARBONATE

## ELECTRICAL SPECIFICATIONS

| Watts | Rated Current | Output Voltage | Dimming Type | Input Voltage | Input Power | Input Current | Power Factor | Efficiency | Hatch Part Number |
|---|---|---|---|---|---|---|---|---|---|
| **Dimming Models** | | | | | | | | | |
| 12W | 350mA | 6-32 VDC | Phase Dimming | 120 VAC | 15W | 0.13A | >0.90 | 75% | LC12-0350P-120-C |
| | 500mA | 5-24 VDC | Phase Dimming | 120 VAC | 15W | 0.13A | >0.90 | 77% | LC12-0500P-120-C |
| | 600mA | 5-20 VDC | Phase Dimming | 120 VAC | 15W | 0.13A | >0.90 | 77% | LC12-0600P-120-C |
| | 700mA | 5-17 VDC | Phase Dimming | 120 VAC | 15W | 0.13A | >0.90 | 77% | LC12-0700P-120-C |
| **Non-Dimming Models** | | | | | | | | | |
| 12W | 350mA | 6-32 VDC | Non-Dimming | 120 VAC | 16W | 0.12A | >0.90 | 77% | LC12-0350N-120-C |

## PRODUCT FEATURES

- Short circuit and overload protection
- Suitable for dry and damp locations
- Withstanding voltage: L-N 2kV
- Operating temperature range: -40°C to 90°C (measured at Tcase)
- MTBF: 570,000 hours @ 40°C ambient (~70°C case temp)
- Inrush Current: <20A Max @120VAC, cold start 25°C

## APPROVALS

- UL 8750 recognized component
- EN61000-3-2
- EMC: Meets FCC47 CFR Part 15 (Class B) consumer limits

## MECHANICAL SPECIFICATIONS: CASE STYLE C

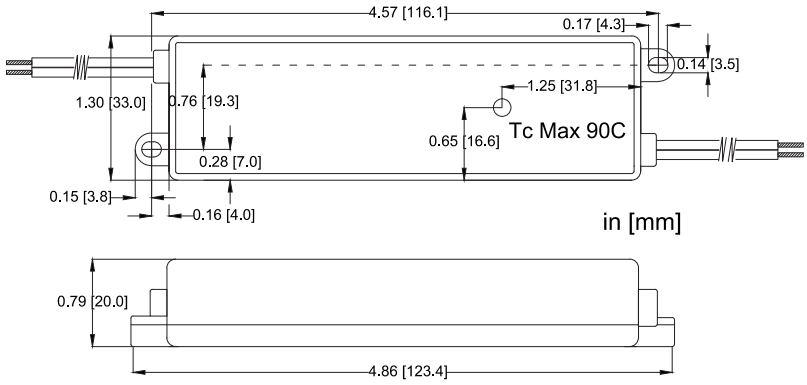


## DIMENSIONS [IN/MM]

| | |
|---|---|
| Length: | 4.57 [116.1] |
| Mounting: | 4.86 [123.4] |
| Width: | 1.30 [33.0] |
| Height: | 0.79 [20.0] |

## WIRING INFORMATION

| | |
|---|---|
| Input: | 12”, Black (L), White (N) #18AWG |
| Output: | 12”, Red (+), Blue (-) #18AWG |

## PACKAGING INFORMATION

| | |
|---|---|
| Weight: | 4.1oz |
| Quantity: | 40pc/carton |

## WARRANTY

- 5 year limited warranty

## RELATED PRODUCTS

- Case Style Y: 3.3” x 1.0” x 0.5”
- Case Style B: 3.1” x 1.3” x 0.8”

# 12W | Constant Current Case Style C

## GENERAL INFORMATION

| | |
|---|---|
| **LED Driver Type** | Constant Current (Class 2) |
| **Maximum Wattage** | 12 Watts |
| **Input Voltage** | 120 VAC ± 10% Dedicated |
| **Input Frequency** | 50/60Hz |
| **Total Harmonic Distortion** | <20% |

## CASE STYLE C: POLYCARBONATE

## PERFORMANCE CURVES

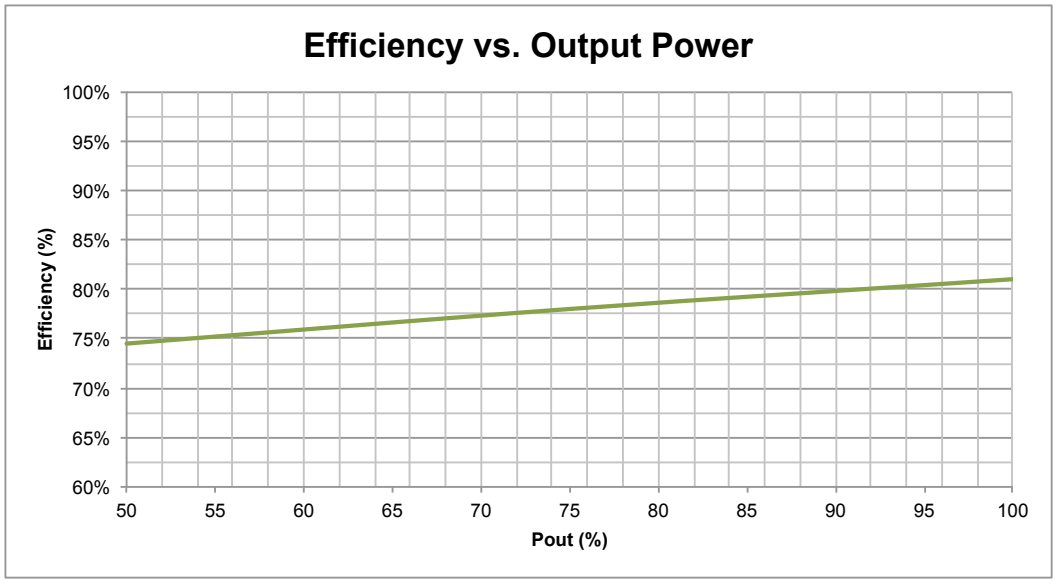


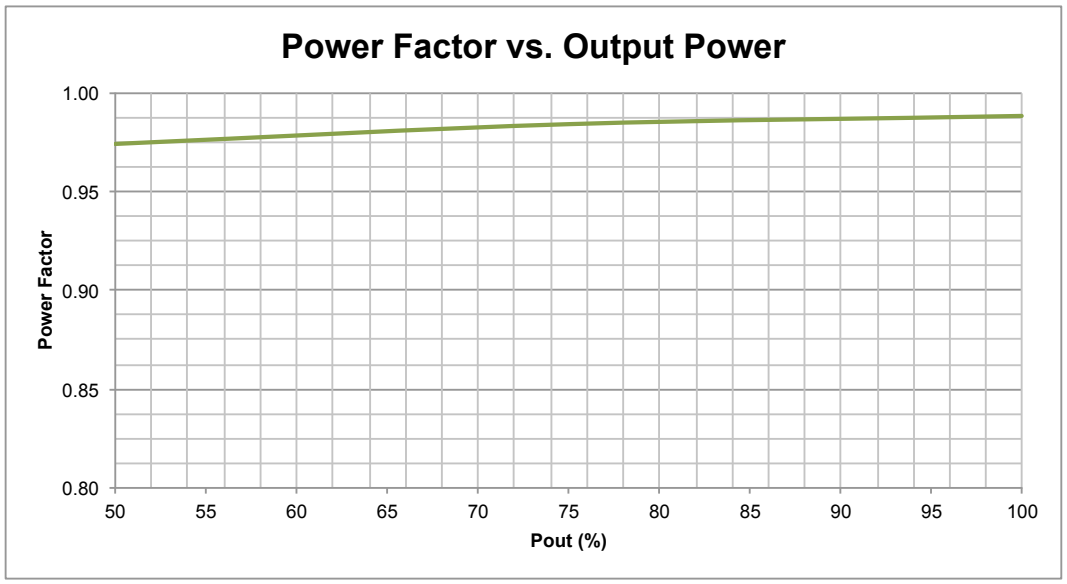


Efficiency and PF measured at 25°C.
Measurements made on model LC12-0600P-120-C.

# 12W | Constant Current Case Style C

## GENERAL INFORMATION

| | |
|---|---|
| **LED Driver Type** | Constant Current (Class 2) |
| **Maximum Wattage** | 12 Watts |
| **Input Voltage** | 120 VAC ± 10% Dedicated |
| **Input Frequency** | 50/60Hz |
| **Total Harmonic Distortion** | <20% |

## CASE STYLE C: POLYCARBONATE

## PERFORMANCE CURVES

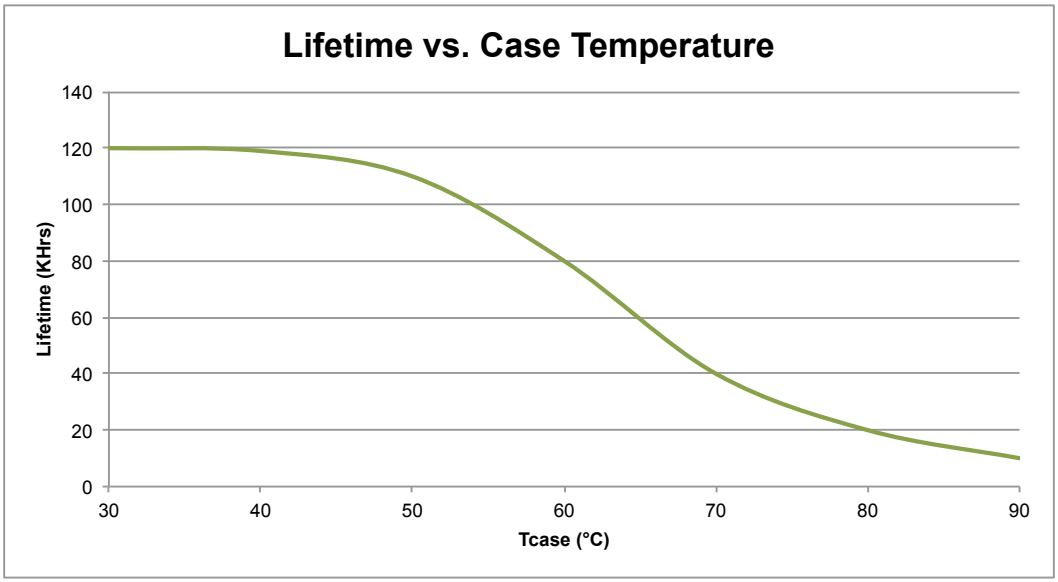


Efficiency and PF measured at 25°C.
Measurements made on model LC12-0600P-120-C.

# 12W | Constant Current Case Style Y

## GENERAL INFORMATION

| | |
|---|---|
| **LED Driver Type** | Constant Current (Class 2) |
| **Maximum Wattage** | 12 Watts |
| **Input Voltage** | 120-277 VAC ± 10% Universal |
| **Input Frequency** | 50/60Hz |
| **Total Harmonic Distortion** | <20% |

## CASE STYLE Y : POLYCARBONATE

## ELECTRICAL SPECIFICATIONS

| Watts | Rated Current | Output Voltage | Dimming Type | Input Voltage | Input Power | Input Current | Power Factor | Efficiency | Hatch Part Number |
|---|---|---|---|---|---|---|---|---|---|
| **Non-Dimming Models** | | | | | | | | | |
| 12W | *250mA | 29-48 VDC | Non-Dimming | 120 - 277 VAC | 15W | 0.12/0.05A | >0.92 | 85% | *LC12-0250N-UNV-Y |

* Class 2 US ONLY

## PRODUCT FEATURES

- Short circuit and overload protection
- Over temperature protection
- Suitable for dry and damp locations
- Withstanding voltage: I/P – O/P 2kVAC
- Minimum start temp: -30°C
- MTBF: TBD

## APPROVALS

- UL 8750 recognized component
- EN61000-3-2
- EMC: Meets FCC47 CFR Part 15 (Class B) consumer limits
- IP65

## MECHANICAL SPECIFICATIONS: CASE STYLE Y

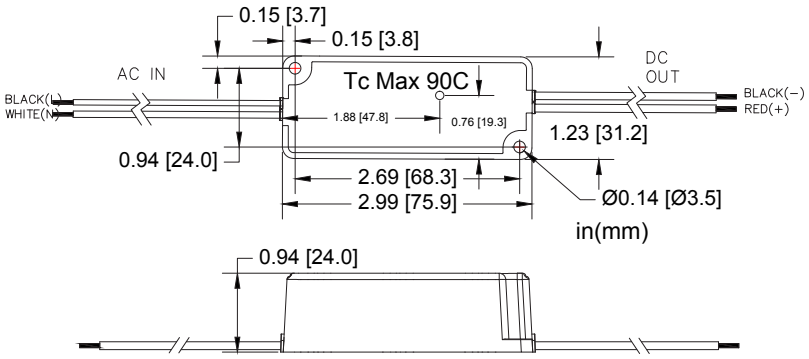


## DIMENSIONS [IN/MM]

| | |
|---|---|
| Length: | 2.69 [68.3] |
| Mounting: | 2.99 [75.9] |
| Width: | 0.94 [24.0] |
| Height: | 0.94 [24.0] |

## WIRING INFORMATION

| | |
|---|---|
| Input: | 6” Black (L), White (N) #18AWG |
| Output: | 6” Red (+), Blue (-) #18AWG |

## PACKAGING INFORMATION

| | |
|---|---|
| Weight: | 3.2 oz |
| Quantity: | 40pc/carton |

## WARRANTY

- 5 year limited warranty

## RELATED PRODUCT

- Case Style B: 3.1” x 1.3” x 0.8”
- Case Style C: 4.8” x 1.3” x 0.8”

# 14W Constant Current Case Style C

## GENERAL INFORMATION

| | |
|---|---|
| **LED Driver Type** | Constant Current (Class 2) |
| **Maximum Wattage** | 14 Watts |
| **Input Voltage** | 120 VAC ± 10% Dedicated<br>120-277 VAC ± 10% Universal |
| **Input Frequency** | 50/60Hz |
| **Total Harmonic Distortion** | <20% |

## CASE STYLE C: POLYCARBONATE

## ELECTRICAL SPECIFICATIONS

| Watts | Rated Current | Output Voltage | Dimming Type | Input Voltage | Input Power | Input Current | Power Factor | Efficiency | Hatch Part Number |
|---|---|---|---|---|---|---|---|---|---|
| **Non-Dimming Models** | | | | | | | | | |
| 14W | 350mA | 15 - 40 VDC | Non-Dimming | 120 - 277 VAC | 17W | 0.15/0.07A | >0.90 | 80% | LC14-0350N-UNV-C |
| | 700mA | 10 - 20 VDC | Non-Dimming | 120 - 277 VAC | 17W | 0.15/0.07A | >0.90 | 80% | LC14-0700N-UNV-C |
| **Dimming Models** | | | | | | | | | |
| 14W | *260mA | 18 - 54 VDC | Phase Dimming | 120 VAC | 17W | 0.17A | >0.90 | 77% | *LC14-0260P-120-C |
| | 350mA | 10 - 40 VDC | Phase Dimming | 120 VAC | 17W | 0.17A | >0.90 | 77% | LC14-0350P-120-C |
| | 500mA | 10 - 28 VDC | Phase Dimming | 120 VAC | 17W | 0.17A | >0.90 | 77% | LC14-0500P-120-C |
| | 700mA | 7 - 20 VDC | Phase Dimming | 120 VAC | 17W | 0.17A | >0.90 | 77% | LC14-0700P-120-C |

*Class 2 US ONLY

## PRODUCT FEATURES

- Short circuit and overload protection
- Suitable for dry and damp locations
- Withstanding voltage: I/P - O/P 2kVAC
- Operating temperature range: -40°C to 90°C (measured at Tcase)
- MTBF: 570,000 hours @ 40°C ambient (~70°C case temp)
- Surge voltage rating: L-N 2kV
- Inrush Current: <20A Max @120VAC for 120V input models, cold start 25°C
- Inrush Current: <10A Max @230VAC for Universal input models, cold start 25°C

## APPROVALS

- UL 8750 recognized component
- EN61000-3-2
- EMC: Meets FCC47 CFR Part 15 (Class B) consumer limits

## MECHANICAL SPECIFICATIONS: CASE STYLE C

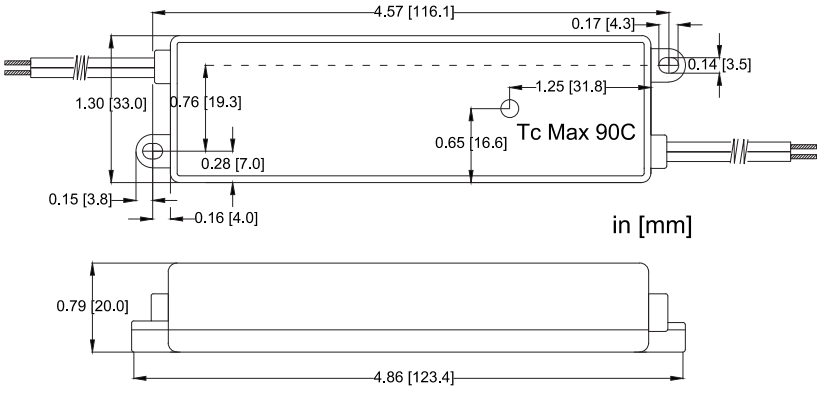


## DIMENSIONS [IN/MM]

| | |
|---|---|
| Length: | 4.57 [116.1] |
| Mounting: | 4.86 [123.4] |
| Width: | 1.30 [33.0] |
| Height: | 0.79 [20.0] |

## WIRING INFORMATION

| | |
|---|---|
| Input: | 12", Black (L), White (N) #18AWG |
| Output: | 12", Red (+), Blue (-) #18AWG |

## PACKAGING INFORMATION

| | |
|---|---|
| Weight: | 4.1oz |
| Quantity: | 40pc/carton |

## WARRANTY

- 5 year limited warranty

## RELATED PRODUCT

Case Style S - 6.5" x 1.4" x 1.0"

# 14W Constant Current Case Style C

## GENERAL INFORMATION

| | |
|---|---|
| **LED Driver Type** | Constant Current (Class 2) |
| **Maximum Wattage** | 14 Watts |
| **Input Voltage** | 120 VAC ± 10% Dedicated<br>120-277 VAC ± 10% Universal |
| **Input Frequency** | 50/60Hz |
| **Total Harmonic Distortion** | <20% |

## CASE STYLE C: POLYCARBONATE

## PERFORMANCE CURVES

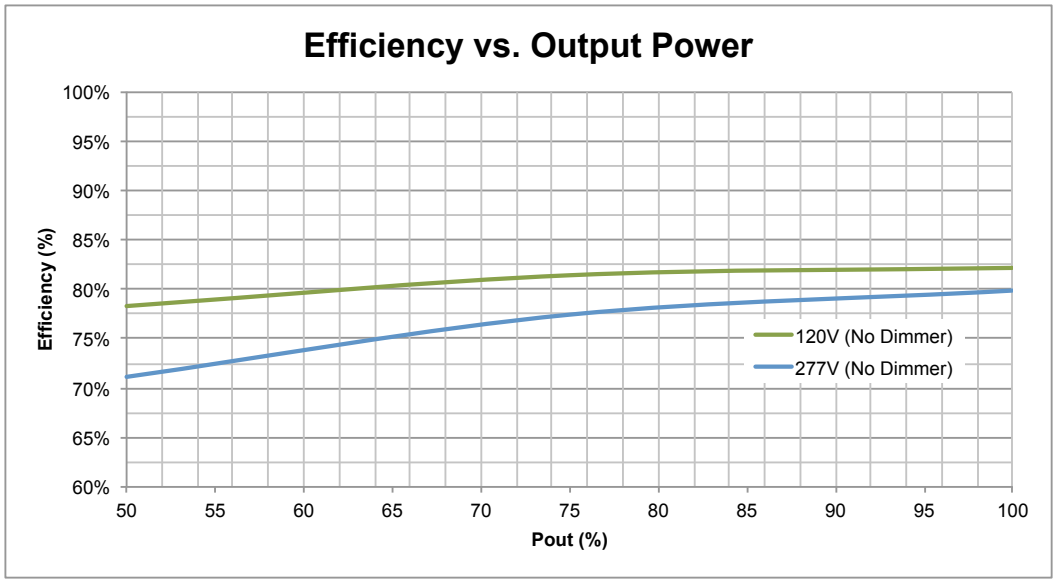


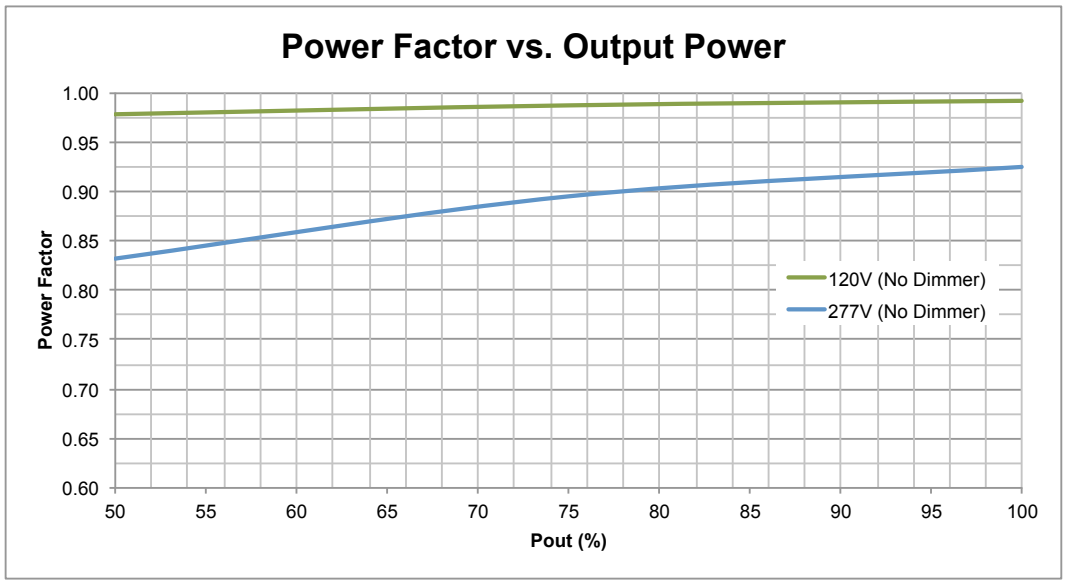


Efficiency and PF measured at 25°C.
Measurements made on model LC14-0700N-UNV-C.

# 14W Constant Current Case Style C

## GENERAL INFORMATION

| | |
|---|---|
| **LED Driver Type** | Constant Current (Class 2) |
| **Maximum Wattage** | 14 Watts |
| **Input Voltage** | 120 VAC ± 10% Dedicated<br>120-277 VAC ± 10% Universal |
| **Input Frequency** | 50/60Hz |
| **Total Harmonic Distortion** | <20% |

## CASE STYLE C: POLYCARBONATE

## PERFORMANCE CURVES

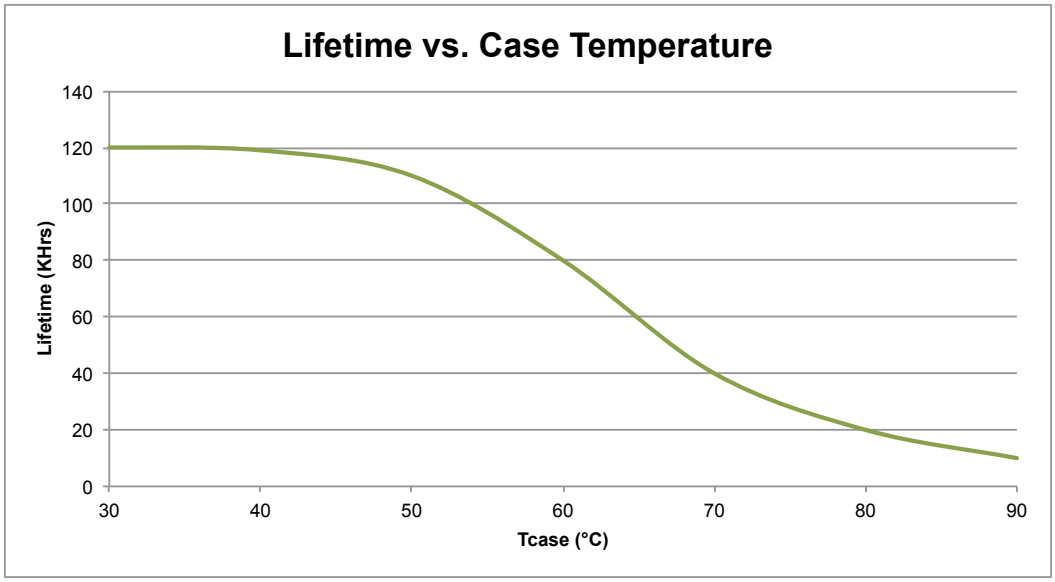


Efficiency and PF measured at 25°C.
Measurements made on model LC14-0700N-UNV-C.

# 14W | Constant Current Case Style S

## GENERAL INFORMATION

| | |
|---|---|
| **LED Driver Type** | Constant Current (Class 2) |
| **Maximum Wattage** | 14 Watts |
| **Input Voltage** | 120-277 VAC ± 10% Universal |
| **Input Frequency** | 50/60Hz |
| **Total Harmonic Distortion** | <20% |

## CASE STYLE S: METAL

## ELECTRICAL SPECIFICATIONS

| Watts | Rated Current | Output Voltage | Dimming Type | Input Voltage | Input Power | Input Current | Power Factor | Efficiency | Hatch Part Number |
|---|---|---|---|---|---|---|---|---|---|
| **Dimming Models** | | | | | | | | | |
| 14W | 350mA | 20 - 40 VDC | 0-10V Dimming | 120 - 277 VAC | 17W | 0.15/0.08A | >0.90 | 82% | LC14-0350Z-UNV-S |
| | 400mA | 18 - 35 VDC | 0-10V Dimming | 120 - 277 VAC | 17W | 0.15/0.08A | >0.90 | 82% | LC14-0400Z-UNV-S |
| | 450mA | 15 - 30 VDC | 0-10V Dimming | 120 - 277 VAC | 17W | 0.15/0.08A | >0.90 | 82% | LC14-0450Z-UNV-S |
| | 500mA | 14 - 28 VDC | 0-10V Dimming | 120 - 277 VAC | 17W | 0.15/0.08A | >0.90 | 82% | LC14-0500Z-UNV-S |
| | 600mA | 12-24 VDC | 0-10V Dimming | 120 - 277 VAC | 17W | 0.15/0.08A | >0.90 | 80% | LC14-0600Z-UNV-S |
| | 700mA | 12-20 VDC | 0-10V Dimming | 120 - 277 VAC | 17W | 0.15/0.08A | >0.90 | 80% | LC14-0700Z-UNV-S |

## PRODUCT FEATURES

- Short circuit and overload protection
- Over temperature protection
- Suitable for dry and damp locations
- Withstanding voltage: I/P – O/P 2kVAC
- Operating temperature range: -40°C to 90°C (measured at Tcase)
- MTBF: 510,000 hours @ 40°C ambient (~70°C case temp)
- Surge voltage rating: L-N 2kV, L/N-GND 4kV
- Inrush Current: <10A Max @230VAC, cold start 25°C

## APPROVALS

- UL 8750 recognized component
- EN61000-3-2
- EMC: Meets FCC47 CFR Part 15 (Class B) consumer limits

## MECHANICAL SPECIFICATIONS: CASE STYLE S

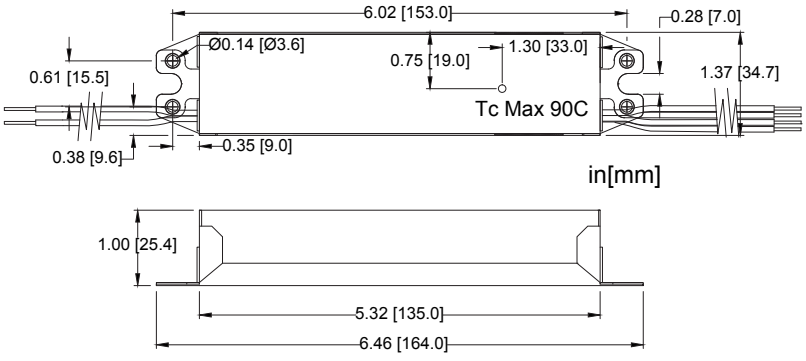





## DIMENSIONS [IN/MM]

| | |
|---|---|
| Length: | 5.32 [135.0] |
| Mounting: | 6.46 [164.0] |
| Width: | 1.37 [34.7] |
| Height: | 1.00 [25.4] |

## WIRING INFORMATION

| | |
|---|---|
| Input: | 12”, Black (L), White (N) #18AWG |
| Output: | 12”, Red (+), Blue (-) #18AWG |
| Dimming: | 12”, Purple (+), Grey (-) #18AWG |

## PACKAGING INFORMATION

| | |
|---|---|
| Weight: | 9 oz |
| Quantity: | 20pc/carton |

## WARRANTY

- 5 year limited warranty

## RELATED PRODUCT

- Case Style C: 4.8” x 1.3” x 0.8”

# 14W | Constant Current Case Style S

## GENERAL INFORMATION

| | |
|---|---|
| **LED Driver Type** | Constant Current (Class 2) |
| **Maximum Wattage** | 14 Watts |
| **Input Voltage** | 120-277 VAC ± 10% Universal |
| **Input Frequency** | 50/60Hz |
| **Total Harmonic Distortion** | <20% |

## CASE STYLE S: METAL

## PERFORMANCE CURVES

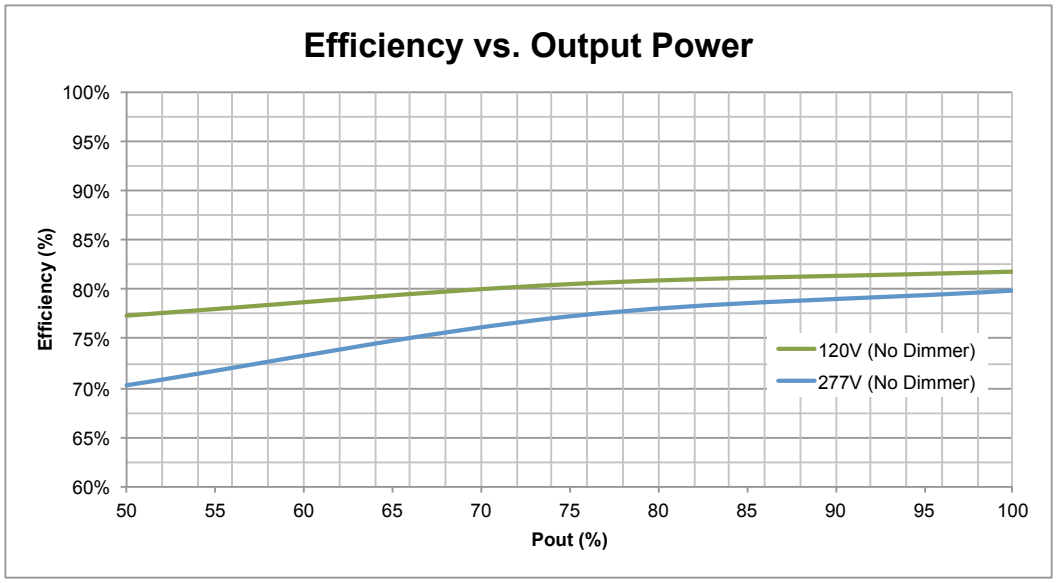


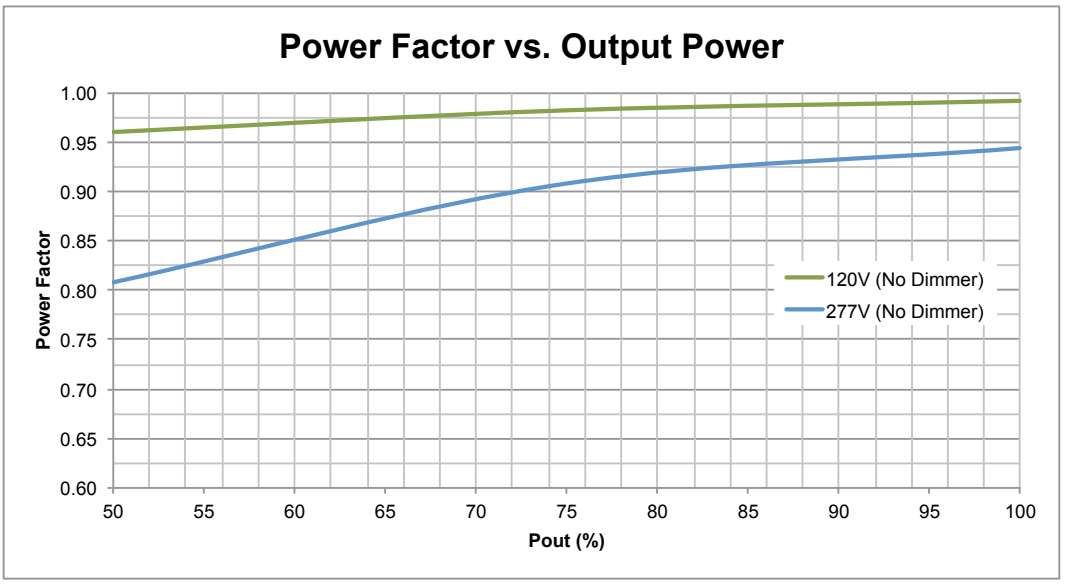


Efficiency and PF measured at 25°C.
Measurements made on model LC14-0700Z-UNV-S.

# 14W | Constant Current Case Style S

## GENERAL INFORMATION

| | |
|---|---|
| **LED Driver Type** | Constant Current (Class 2) |
| **Maximum Wattage** | 14 Watts |
| **Input Voltage** | 120-277 VAC ± 10% Universal |
| **Input Frequency** | 50/60Hz |
| **Total Harmonic Distortion** | <20% |

## CASE STYLE S: METAL

## PERFORMANCE CURVES

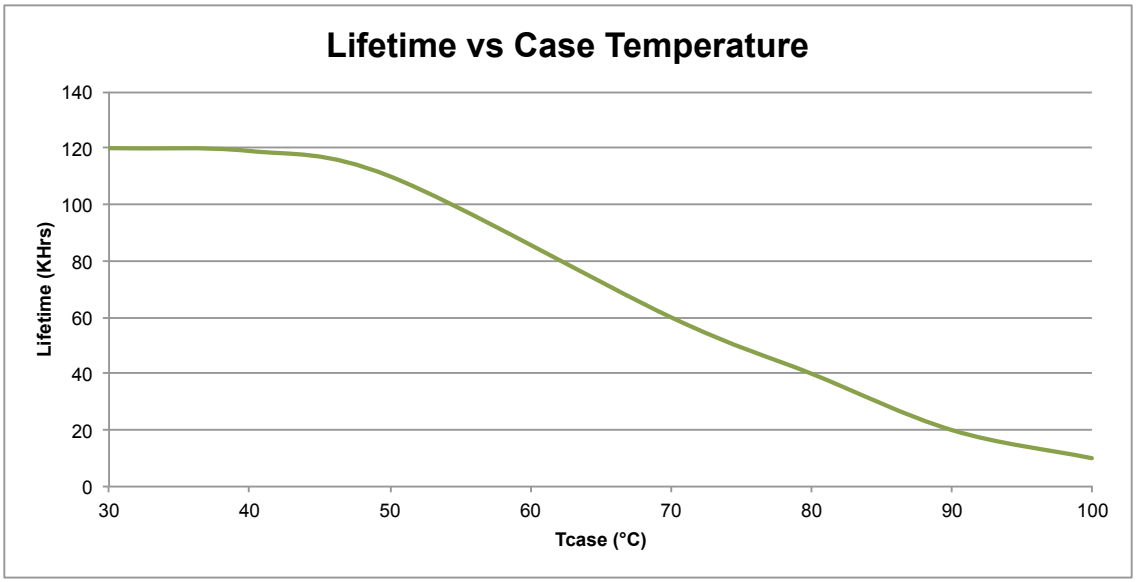


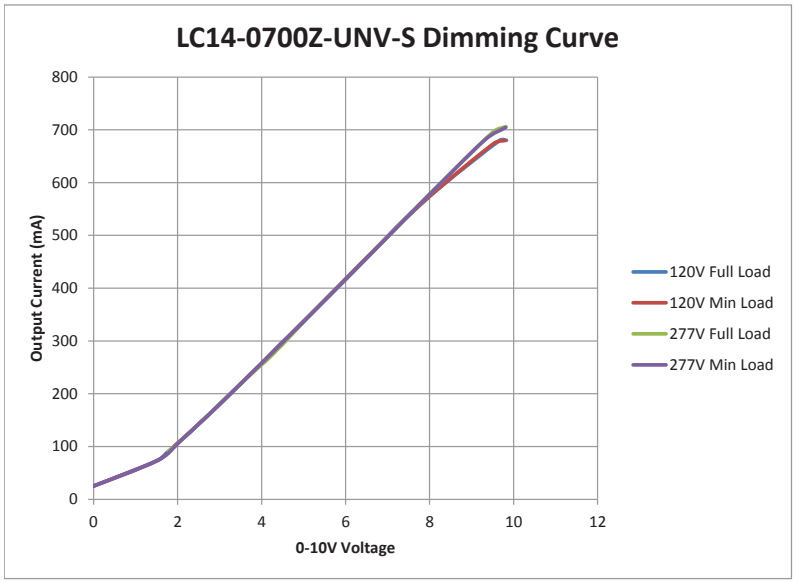


Efficiency, PF and lifetime measured at 25°C.
Measurements made on model LC14-0700Z-UNV-S.

# 16W Constant Current Case Style D

## GENERAL INFORMATION

| | |
|---|---|
| **LED Driver Type** | Constant Current (Class 2) |
| **Maximum Wattage** | 16 Watts |
| **Input Voltage** | 120 VAC ± 10% Dedicated<br>120 - 277 VAC ± 10% Universal |
| **Input Frequency** | 50/60Hz |
| **Total Harmonic Distortion** | <20% |

## CASE STYLE D: METAL

## ELECTRICAL SPECIFICATIONS

| Watts | Rated Current | Output Voltage | Dimming Type | Input Voltage | Input Power | Input Current | Power Factor | Efficiency | Hatch Part Number |
|---|---|---|---|---|---|---|---|---|---|
| **Non-Dimming Models** | | | | | | | | | |
| 16W | *350mA | 15 - 46 VDC | Non-Dimming | 120 - 277 VAC | 20W | 0.19/0.09A | >0.90 | 80% | *LC16-0350N-UNV-D |
| | 400mA | 13 - 40 VDC | Non-Dimming | 120 - 277 VAC | 20W | 0.19/0.09A | >0.90 | 80% | LC16-0400N-UNV-D |
| | 500mA | 10 - 32 VDC | Non-Dimming | 120 - 277 VAC | 20W | 0.19/0.09A | >0.90 | 80% | LC16-0500N-UNV-D |
| | 600mA | 10 - 27 VDC | Non-Dimming | 120 - 277 VAC | 20W | 0.19/0.09A | >0.90 | 80% | LC16-0600N-UNV-D |
| | 700mA | 9 - 23 VDC | Non-Dimming | 120 - 277 VAC | 20W | 0.19/0.09A | >0.90 | 80% | LC16-0700N-UNV-D |
| | 1000mA | 6 - 16 VDC | Non-Dimming | 120 - 277 VAC | 20W | 0.19/0.09A | >0.90 | 80% | LC16-1000N-UNV-D |
| | 1050mA | 6 - 16 VDC | Non-Dimming | 120 - 277 VAC | 20W | 0.16/0.07A | >0.90 | 80% | LC16-1050N-UNV-D |
| | 1200mA | 6 - 13 VDC | Non-Dimming | 120 - 277 VAC | 20W | 0.19/0.09A | >0.90 | 80% | LC16-1200N-UNV-D |
| | 1400mA | 6 - 12 VDC | Non-Dimming | 120 - 277 VAC | 20W | 0.16/0.08A | >0.90 | 83% | LC16-1400N-UNV-D |
| **Dimming Models** | | | | | | | | | |
| 16W | *350mA | 15 - 46 VDC | Phase Dimming | 120 VAC | 20W | 0.18A | >0.90 | 80% | *LC16-0350P-120-D |
| | 400mA | 13 - 40 VDC | Phase Dimming | 120 VAC | 20W | 0.18A | >0.90 | 80% | LC16-0400P-120-D |
| | 500mA | 10 - 32 VDC | Phase Dimming | 120 VAC | 20W | 0.18A | >0.90 | 80% | LC16-0500P-120-D |
| | 600mA | 9 - 27 VDC | Phase Dimming | 120 VAC | 20W | 0.18A | >0.90 | 80% | LC16-0600P-120-D |
| | 700mA | 8 - 23 VDC | Phase Dimming | 120 VAC | 20W | 0.18A | >0.90 | 80% | LC16-0700P-120-D |
| | 1000mA | 6 - 16 VDC | Phase Dimming | 120 VAC | 20W | 0.18A | >0.90 | 80% | LC16-1000P-120-D |
| | 1050mA | 6 - 16 VDC | Phase Dimming | 120 VAC | 20W | 0.18A | >0.90 | 80% | LC16-1050P-120-D |
| | 1200mA | 6 - 13 VDC | Phase Dimming | 120 VAC | 20W | 0.18A | >0.90 | 80% | LC16-1200P-120-D |

*Class 2 US ONLY

## PRODUCT FEATURES

- Short circuit and overload protection
- Suitable for dry and damp locations
- Withstanding voltage: I/P – O/P 2kVAC
- Operating temperature range: -40°C to 90°C (measured at Tcase)
- MTBF: 376,000 hours @ 40°C ambient (~70°C case temp)
- Surge voltage rating: L-N 2kV, L/N-GND 4kV
- Inrush Current: <10A Max @120VAC for 120V input models, cold start 25°C
- Inrush Current: <10A Max @230VAC for Universal input models, cold start 25°C

## APPROVALS

- UL 8750 recognized component
- EN61000-3-2
- EMC: Meets FCC47 CFR Part 15 (Class B) consumer limits

# 16W | Constant Current Case Style D

## GENERAL INFORMATION

| | |
|---|---|
| **LED Driver Type** | Constant Current (Class 2) |
| **Maximum Wattage** | 16 Watts |
| **Input Voltage** | 120 VAC ± 10% Dedicated<br>120 - 277 VAC ± 10% Universal |
| **Input Frequency** | 50/60Hz |
| **Total Harmonic Distortion** | <20% |

## CASE STYLE D: METAL

## MECHANICAL SPECIFICATIONS: CASE STYLE D

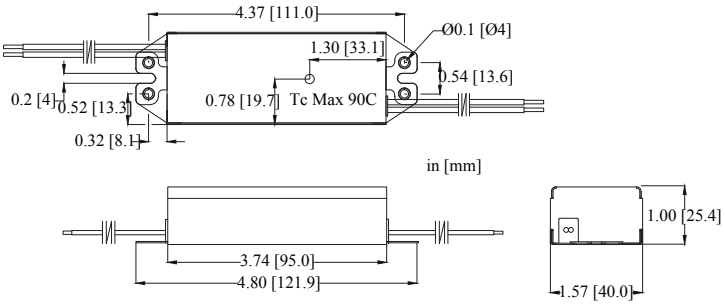


### DIMENSIONS [IN/MM]

| | |
|---|---|
| Length: | 3.74 [95.0] |
| Mounting: | 4.80 [121.9] |
| Width: | 1.57 [40.0] |
| Height: | 1.00 [25.4] |

### WIRING INFORMATION

| | |
|---|---|
| Input: | 12”, Black (L), White (N) #18AWG |
| Output: | 12”, Red (+), Blue (-) #18AWG |

### PACKAGING INFORMATION

| | |
|---|---|
| Weight: | 8.3oz |
| Quantity: | 60pc/carton |

## WARRANTY

- 5 year limited warranty

## RELATED PRODUCTS

- Case Style D1: 4.8” x 1.6” x 1.0”
- Case Style Q: 3.1” x 2.5” x 1.0”

# 16W | Constant Current Case Style D

## GENERAL INFORMATION

| | |
|---|---|
| **LED Driver Type** | Constant Current (Class 2) |
| **Maximum Wattage** | 16 Watts |
| **Input Voltage** | 120 VAC ± 10% Dedicated<br>120 - 277 VAC ± 10% Universal |
| **Input Frequency** | 50/60Hz |
| **Total Harmonic Distortion** | <20% |

## CASE STYLE D: METAL

## PERFORMANCE CURVES

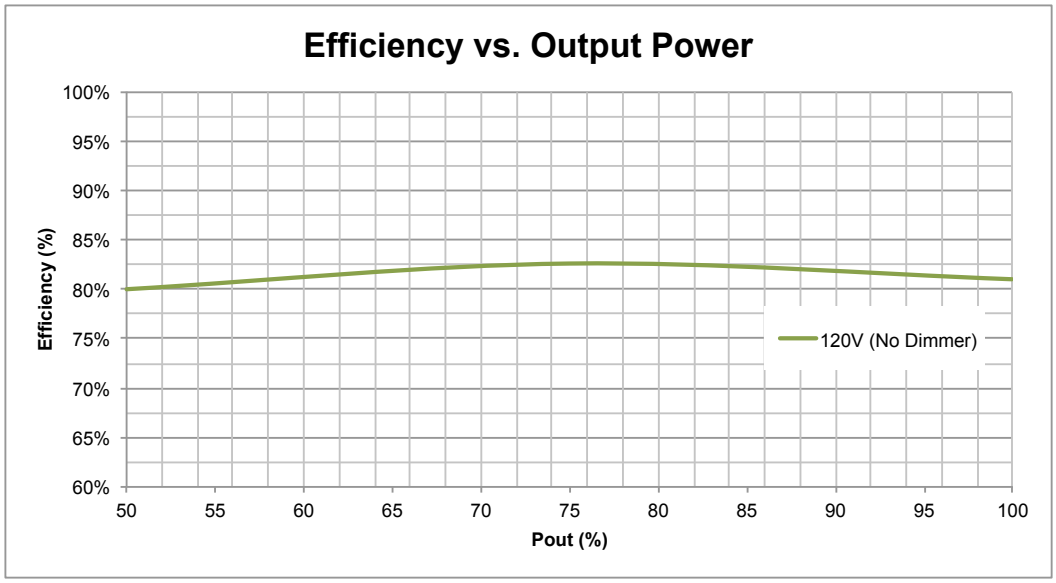


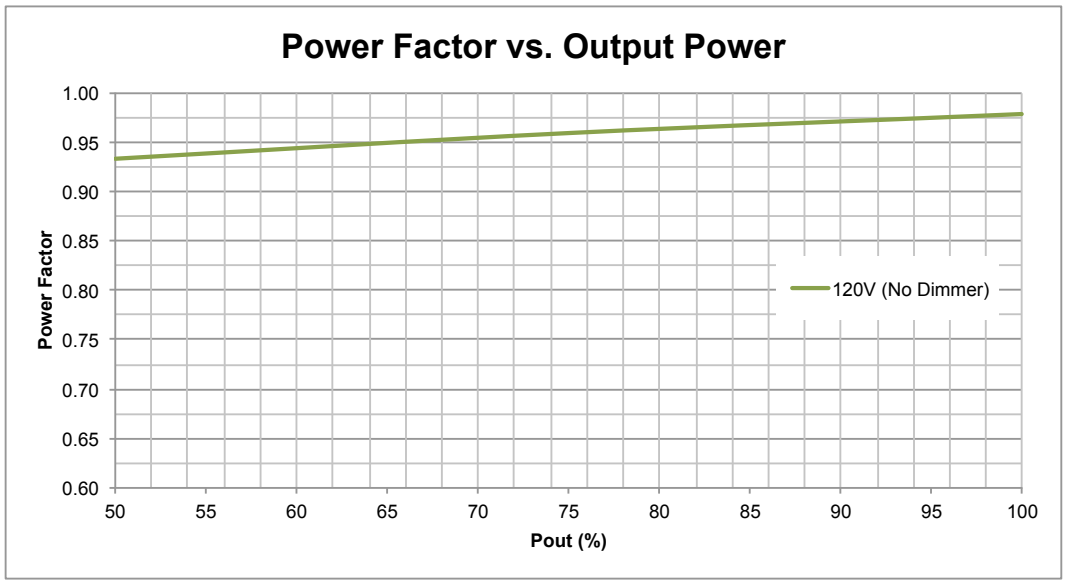


Efficiency and PF measured at 25°C.
Measurements made on model LC16-1050P-120-D.

# 16W | Constant Current Case Style D

## GENERAL INFORMATION

| | |
|---|---|
| **LED Driver Type** | Constant Current (Class 2) |
| **Maximum Wattage** | 16 Watts |
| **Input Voltage** | 120 VAC ± 10% Dedicated<br>120 - 277 VAC ± 10% Universal |
| **Input Frequency** | 50/60Hz |
| **Total Harmonic Distortion** | <20% |

## CASE STYLE D: METAL

## PERFORMANCE CURVES

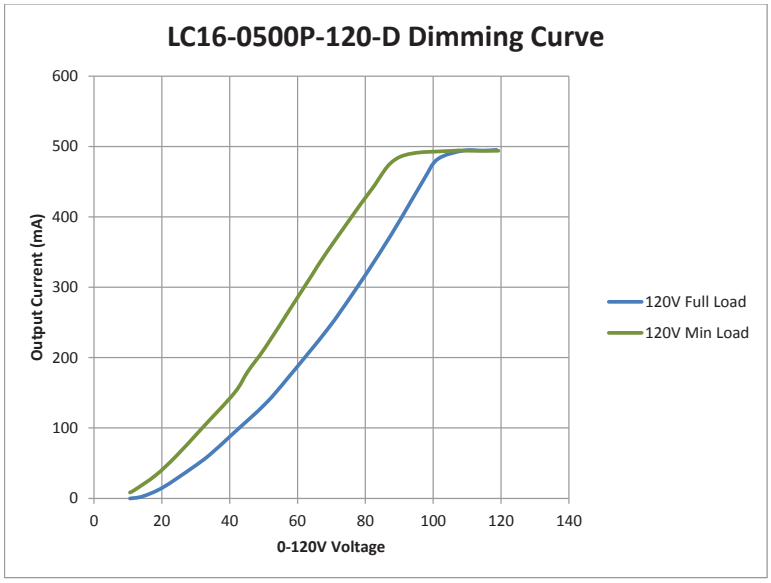

# 16W | Constant Current Case Style D1

## GENERAL INFORMATION

| | |
|---|---|
| **LED Driver Type** | Constant Current (Class 2) |
| **Maximum Wattage** | 16 Watts |
| **Input Voltage** | 120 VAC ± 10% Dedicated |
| **Input Frequency** | 50/60Hz |
| **Total Harmonic Distortion** | <20% |

## CASE STYLE D1: METAL

## ELECTRICAL SPECIFICATIONS

| Watts | Rated Current | Output Voltage | Dimming Type | Input Voltage | Input Power | Input Current | Power Factor | Efficiency | Hatch Part Number |
|---|---|---|---|---|---|---|---|---|---|
| **Dimming Models** | | | | | | | | | |
| 16W | *350mA | 15 - 46 VDC | Phase Dimming | 120 VAC | 20W | 0.18A | >0.90 | 80% | *LC16-0350P-120-D1 |
| | 500mA | 10 - 32 VDC | Phase Dimming | 120 VAC | 20W | 0.18A | >0.90 | 80% | LC16-0500P-120-D1 |

*Class 2 US ONLY

## PRODUCT FEATURES

- Short circuit and overload protection
- Suitable for dry and damp locations
- Withstanding voltage: I/P – O/P 2kVAC
- Operating temperature range: -40°C to 90°C (measured at Tcase)
- MTBF: 376,000 hours @ 40°C ambient (~70°C case temp)
- Inrush Current: <10A Max @120VAC for 120V input models, cold start 25°C
- Inrush Current: <10A Max @230VAC for Universal input models, cold start 25°C

## APPROVALS

- UL 8750 recognized component
- EN61000-3-2
- EMC: Meets FCC47 CFR Part 15 (Class B) consumer limits

## MECHANICAL SPECIFICATIONS: CASE STYLE D1

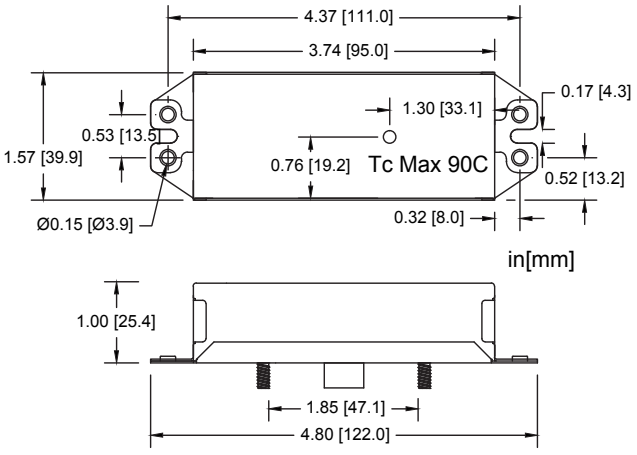


## DIMENSIONS [IN/MM]

| | |
|---|---|
| Length: | 3.74 [95.0] |
| Mounting: | 4.80 [122.0] |
| Width: | 1.57 [39.9] |
| Height: | 1.00 [25.4] |

## WIRING INFORMATION

| | |
|---|---|
| Input: | 12”, Black (L), White (N) #18AWG |
| Output: | 12”, Red (+), Blue (-) #18AWG |

## PACKAGING INFORMATION

| | |
|---|---|
| Weight: | 8.3oz |
| Quantity: | 60pc/carton |

## WARRANTY

- 5 Year Limited Warranty

## RELATED PRODUCTS

- Case Style D: 4.8” x 1.6” x 1.0”
- Case Style Q: 3.1” x 2.5” x 1.0”

# 16W Constant Current Case Style Q

## GENERAL INFORMATION

| | |
|---|---|
| **LED Driver Type** | Constant Current (Class 2) |
| **Maximum Wattage** | 16 Watts |
| **Input Voltage** | 120 VAC ± 10% Dedicated<br>120 - 277 VAC ± 10% Universal |
| **Input Frequency** | 50/60Hz |
| **Total Harmonic Distortion** | <20% |

## CASE STYLE Q: POLYCARBONATE

## ELECTRICAL SPECIFICATIONS

| Watts | Rated Current | Output Voltage | Dimming Type | Input Voltage | Input Power | Input Current | Power Factor | Efficiency | Hatch Part Number |
|---|---|---|---|---|---|---|---|---|---|
| **Dimming Models** | | | | | | | | | |
| 16W | *350mA | 15 - 46 VDC | 0-10V Dimming | 120 - 277 VAC | 20W | 0.19/0.09A | >0.90 | 80% | *LC16-0350Z-UNV-Q |
| | 500mA | 10 - 32 VDC | 0-10V Dimming | 120 - 277 VAC | 20W | 0.19/0.09A | >0.90 | 80% | LC16-0500Z-UNV-Q |
| | 700mA | 12 - 23 VDC | 0-10V Dimming | 120 - 277 VAC | 20W | 0.19/0.09A | >0.90 | 80% | LC16-0700Z-UNV-Q |
| | *350mA | 15 - 46 VDC | Phase Dimming | 120 VAC | 20W | 0.18A | >0.90 | 80% | *LC16-0350P-120-Q |
| | 400mA | 13 - 40 VDC | Phase Dimming | 120 VAC | 20W | 0.18A | >0.90 | 80% | LC16-0400P-120-Q |
| | 500mA | 10 - 32 VDC | Phase Dimming | 120 VAC | 20W | 0.18A | >0.90 | 80% | LC16-0500P-120-Q |
| | 600mA | 9 - 27 VDC | Phase Dimming | 120 VAC | 20W | 0.18A | >0.90 | 80% | LC16-0600P-120-Q |
| | 700mA | 7 - 23 VDC | Phase Dimming | 120 VAC | 20W | 0.18A | >0.90 | 80% | LC16-0700P-120-Q |
| | 1000mA | 6 - 16 VDC | Phase Dimming | 120 VAC | 20W | 0.18A | >0.90 | 80% | LC16-1000P-120-Q |
| | 1050mA | 6 - 16 VDC | Phase Dimming | 120 VAC | 20W | 0.18A | >0.90 | 80% | LC16-1050P-120-Q |

*Class 2 US Only

## PRODUCT FEATURES

- Short circuit and overload protection
- Suitable for dry and damp locations
- Withstanding voltage: I/P – O/P 2kVAC
- Operating temperature range: -40°C to 90°C (measured at Tcase)
- MTBF: 374,000 hours @ 40°C ambient (~70°C case temp)
- Surge voltage rating: L-N 2kV
- Inrush Current: <5A Max @120VAC for 120V input models, cold start 25°C
- Inrush Current: <10A Max @230VAC for Universal input models, cold start 25°C

## APPROVALS

- UL 8750 recognized component
- EN61000-3-2
- EMC: Meets FCC47 CFR Part 15 (Class B) consumer limits
- IP66

## WARRANTY

- 5 Year Limited Warranty

## RELATED PRODUCT

- Case Style D: 4.8” x 1.6” x 1.0”
- Case Style D1: 4.8” x 1.6” x 1.0”

## MECHANICAL SPECIFICATIONS: CASE STYLE Q

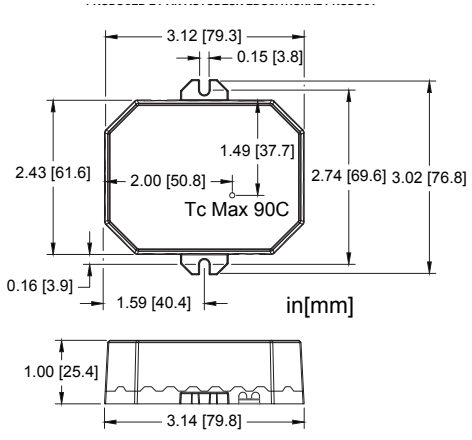


## WIRING INFORMATION

| | |
|---|---|
| Input: | 12”, Black (L), White (N) #18AWG |
| Output: | 12”, Red (+), Blue (-) #18AWG |
| Dimming: | 12”, Purple (+), Grey (-) #18AWG |

## PACKAGING INFORMATION

| | |
|---|---|
| Weight: | 6.4 oz |
| Quantity: | 50pc/carton |

# 16W | Constant Current Case Style Q

## GENERAL INFORMATION

| | |
|---|---|
| **LED Driver Type** | Constant Current (Class 2) |
| **Maximum Wattage** | 16 Watts |
| **Input Voltage** | 120 VAC ± 10% Dedicated<br>120 - 277 VAC ± 10% Universal |
| **Input Frequency** | 50/60Hz |
| **Total Harmonic Distortion** | <20% |

## CASE STYLE Q: POLYCARBONATE

## PERFORMANCE CURVES

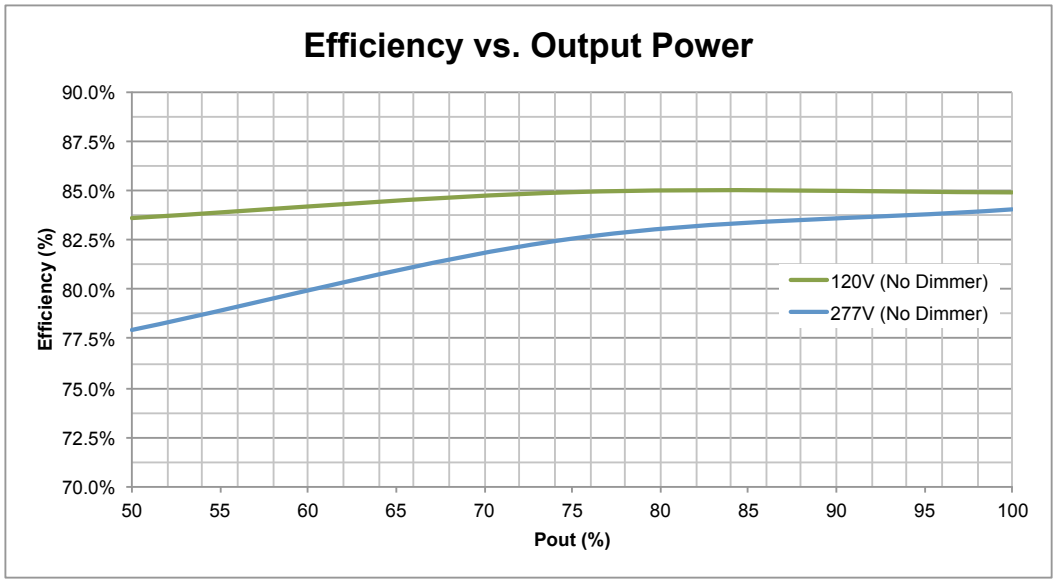


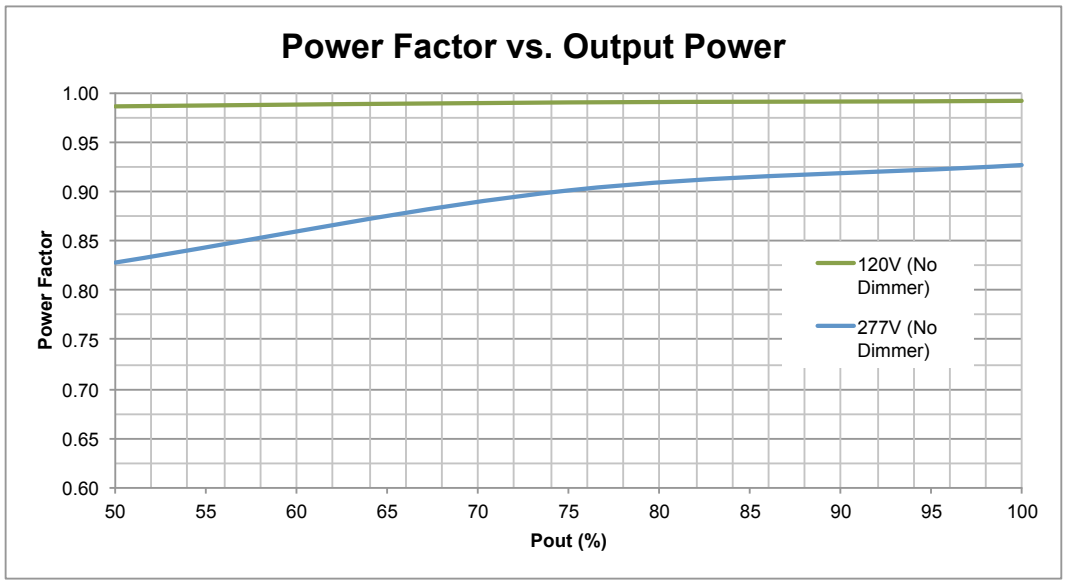


Efficiency and PF measured at 25°C.
Measurements made on model LC16-0700Z-UNV-Q.

# 16W | Constant Current Case Style Q

## GENERAL INFORMATION

| | |
|---|---|
| **LED Driver Type** | Constant Current (Class 2) |
| **Maximum Wattage** | 16 Watts |
| **Input Voltage** | 120 VAC ± 10% Dedicated<br>120 - 277 VAC ± 10% Universal |
| **Input Frequency** | 50/60Hz |
| **Total Harmonic Distortion** | <20% |

## CASE STYLE Q: POLYCARBONATE

## PERFORMANCE CURVES

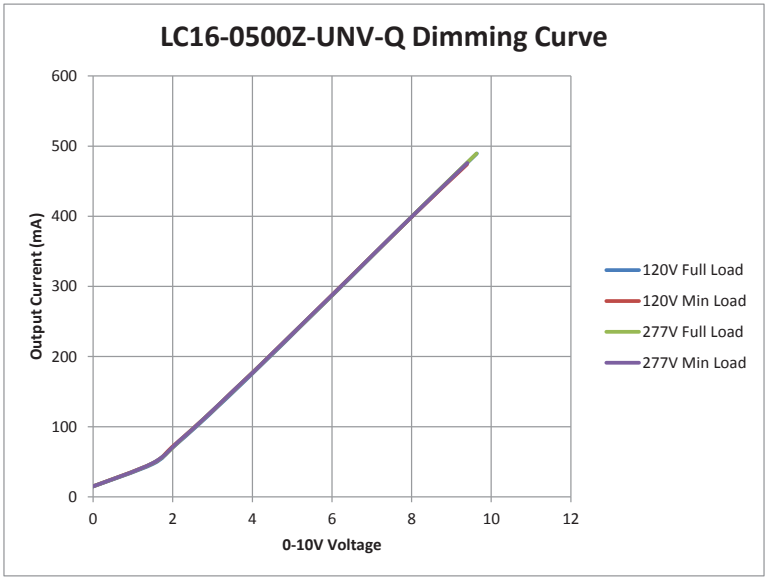

# 20W Constant Current Case Style AA

## GENERAL INFORMATION

| | |
|---|---|
| **LED Driver Type** | Constant Current (Class 2) |
| **Maximum Wattage** | 20 Watts |
| **Input Voltage** | 120 - 277 VAC ± 10% Universal |
| **Input Frequency** | 50/60Hz |
| **Total Harmonic Distortion** | <20% |

## CASE STYLE AA: POLYCARBONATE

## ELECTRICAL SPECIFICATIONS

| Watts | Rated Current | Output Voltage | Dimming Type | Input Voltage | Input Power | Input Current | Power Factor | Efficiency | Hatch Part Number |
|---|---|---|---|---|---|---|---|---|---|
| **Dimming Models** | | | | | | | | | |
| **20W** | *350mA | 19 - 57 VDC | 0-10V Dimming | 120 - 277 VAC | 23W | 0.25/0.08A | >0.90 | 88% | *LC20-0350Z-UNV-AA |
| | 500mA | 24 - 40 VDC | 0-10V Dimming | 120 - 277 VAC | 23W | 0.25/0.08A | >0.90 | 87% | LC20-0500Z-UNV-AA |
| | 700mA | 9 - 28 VDC | 0-10V Dimming | 120 - 277 VAC | 23W | 0.25/0.08A | >0.90 | 80% | LC20-0700Z-UNV-AA |

* Class 2 US Only **Non- Class 2

## PRODUCT FEATURES

- Short circuit and overload protection
- Over temperature protection
- Suitable for dry and damp locations
- Withstanding voltage: I/P – O/P 2kVAC
- Minimum start temp: -30°C

## APPROVALS

- UL 8750 recognized component
- EN61000-3-2
- EMC: Meets FCC47 CFR Part 15 (Class B) consumer limits
- IP 65

## MECHANICAL SPECIFICATIONS: CASE STYLE AA

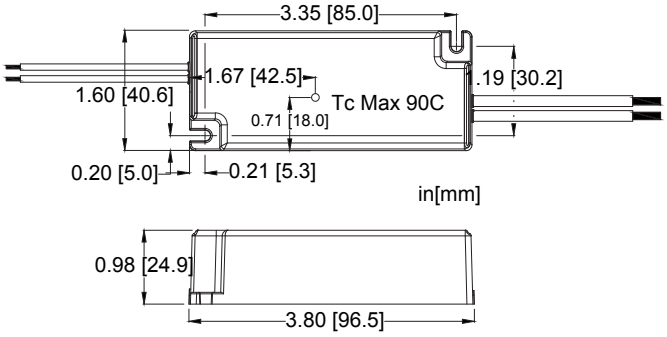


## DIMENSIONS [IN/MM]

| | |
|---|---|
| Length: | 3.35 [85.0] |
| Mounting: | 3.80 [96.5] |
| Width: | 1.60 [40.6] |
| Height: | 0.98 [24.9] |

## WIRING INFORMATION

| | |
|---|---|
| Input: | 6”, Black (L), White (N) #18AWG |
| Output: | 6”, Red (+), Blue (-) #18AWG |
| Dimming: | 6”, Purple (+), Grey (-) # 22AWG |

## PACKAGING INFORMATION

| | |
|---|---|
| Weight: | 5.5oz |
| Quantity: | 20pc/carton |

## WARRANTY

- 5 year limited warranty

# 20W Constant Current Case Style AA

## GENERAL INFORMATION

| | |
|---|---|
| **LED Driver Type** | Constant Current (Class 2) |
| **Maximum Wattage** | 20 Watts |
| **Input Voltage** | 120 - 277 VAC ± 10% Universal |
| **Input Frequency** | 50/60Hz |
| **Total Harmonic Distortion** | <20% |

## CASE STYLE AA: POLYCARBONATE

## PERFORMANCE CURVES

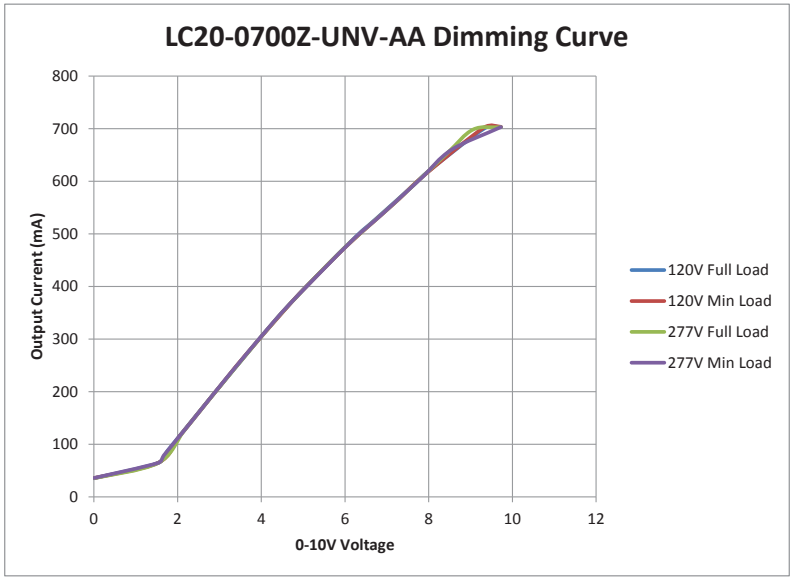

# 22W Constant Current Case Style D

## GENERAL INFORMATION

| | |
|---|---|
| **LED Driver Type** | Constant Current (Class 2) |
| **Maximum Wattage** | 22 Watts |
| **Input Voltage** | 120 VAC ± 10% Dedicated<br>120 - 277 VAC ± 10% Universal |
| **Input Frequency** | 50/60Hz |
| **Total Harmonic Distortion** | <20% |

## CASE STYLE D: METAL

## ELECTRICAL SPECIFICATIONS

| Watts | Rated Current | Output Voltage | Dimming Type | Input Voltage | Input Power | Input Current | Power Factor | Efficiency | Hatch Part Number |
|---|---|---|---|---|---|---|---|---|---|
| **Non-Dimming Models** | | | | | | | | | |
| 22W | **350mA | 21 - 63 VDC | Non-Dimming | 120 - 277 VAC | 27W | 0.26/0.12A | >0.90 | 81% | **LC22-0350N-UNV-D |
| | *500mA | 14 - 44 VDC | Non-Dimming | 120 - 277 VAC | 27W | 0.26/0.12A | >0.90 | 81% | *LC22-0500N-UNV-D |
| | 600mA | 12 - 36 VDC | Non-Dimming | 120 - 277 VAC | 27W | 0.26/0.12A | >0.90 | 81% | LC22-0600N-UNV-D |
| | 700mA | 10 - 32 VDC | Non-Dimming | 120 - 277 VAC | 27W | 0.26/0.12A | >0.90 | 81% | LC22-0700N-UNV-D |
| | 1050mA | 7 - 21 VDC | Non-Dimming | 120 - 277 VAC | 27W | 0.26/0.12A | >0.90 | 81% | LC22-1050N-UNV-D |
| | 1540mA | 7 - 14 VDC | Non-Dimming | 120 - 277 VAC | 27W | 0.26/0.12A | >0.90 | 81% | LC22-1540N-UNV-D |
| **Dimming Models** | | | | | | | | | |
| 22W | **350mA | 21 - 63 VDC | Phase Dimming | 120 VAC | 27W | 0.25A | >0.90 | 81% | **LC22-0350P-120-D |
| | 500mA | 10 - 40 VDC | Phase Dimming | 120 VAC | 25W | 0.23A | >0.90 | 81% | LC22-0500P-120-D |
| | 600mA | 10 - 36 VDC | Phase Dimming | 120 VAC | 27W | 0.25A | >0.90 | 81% | LC22-0600P-120-D |
| | 700mA | 10 - 32 VDC | Phase Dimming | 120 VAC | 27W | 0.25A | >0.90 | 81% | LC22-0700P-120-D |
| | 800mA | 10 - 28 VDC | Phase Dimming | 120 VAC | 27W | 0.25A | >0.90 | 81% | LC22-0800P-120-D |
| | 900mA | 6 - 24 VDC | Phase Dimming | 120 VAC | 27W | 0.25A | >0.90 | 81% | LC22-0900P-120-D |
| | 1000mA | 6 - 22 VDC | Phase Dimming | 120 VAC | 27W | 0.25A | >0.90 | 81% | LC22-1000P-120-D |
| | 1050mA | 6 - 21 VDC | Phase Dimming | 120 VAC | 27W | 0.25A | >0.90 | 81% | LC22-1050P-120-D |
| | 1100mA | 6 - 20 VDC | Phase Dimming | 120 VAC | 27W | 0.25A | >0.90 | 81% | LC22-1100P-120-D |
| | 1200mA | 6 - 19 VDC | Phase Dimming | 120 VAC | 27W | 0.25A | >0.90 | 81% | LC22-1200P-120-D |

** Non-Class 2 *Class 2 US ONLY

## PRODUCT FEATURES

- Short circuit and overload protection
- Suitable for dry and damp locations
- Withstanding voltage: I/P – O/P 2kVAC
- Operating temperature range: -40°C to 90°C (measured at Tcase)
- MTBF: 510,000 hours @ 40°C ambient (~70°C case temp)
- Surge voltage rating: L-N 2kV, L/N-GND 4kV
- Inrush Current: <10A Max @120VAC for 120V input models, cold start 25°C
- Inrush Current: <10A Max @230VAC for Universal input models, cold start 25°C

## APPROVALS

- UL 8750 recognized component
- EN61000-3-2
- EMC: Meets FCC47 CFR Part 15 (Class B) consumer limits

# 22W | Constant Current Case Style D

## GENERAL INFORMATION

| | |
|---|---|
| **LED Driver Type** | Constant Current (Class 2) |
| **Maximum Wattage** | 22 Watts |
| **Input Voltage** | 120 VAC ± 10% Dedicated<br>120 - 277 VAC ± 10% Universal |
| **Input Frequency** | 50/60Hz |
| **Total Harmonic Distortion** | <20% |

## CASE STYLE D: METAL

## MECHANICAL SPECIFICATIONS: CASE STYLE D

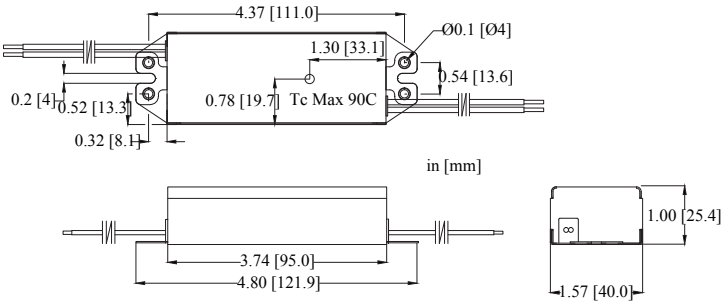


## DIMENSIONS [IN/MM]

| | |
|---|---|
| Length: | 3.74 [95.0] |
| Mounting: | 4.80 [121.9] |
| Width: | 1.57 [40.0] |
| Height: | 1.00 [25.4] |

## WIRING INFORMATION

| | |
|---|---|
| Input: | 12", Black (L), White (N) #18AWG |
| Output: | 12", Red (+), Blue (-) #18AWG |
| Dimming: | 12", Purple (+), Grey (-) UL1316 # 18AWG |

## PACKAGING INFORMATION

| | |
|---|---|
| Weight: | 8.3oz |
| Quantity: | 60pc/carton |

## WARRANTY

- 5 year limited warranty

## RELATED PRODUCTS

- Case Style D1: 4.8" x 1.6" x 1.0"
- Case Style S: 6.5" x 1.4" x 1.0"

# 22W Constant Current Case Style D

## GENERAL INFORMATION

| | |
|---|---|
| **LED Driver Type** | Constant Current (Class 2) |
| **Maximum Wattage** | 22 Watts |
| **Input Voltage** | 120 VAC ± 10% Dedicated<br>120 - 277 VAC ± 10% Universal |
| **Input Frequency** | 50/60Hz |
| **Total Harmonic Distortion** | <20% |

## CASE STYLE D: METAL

## PERFORMANCE CURVES

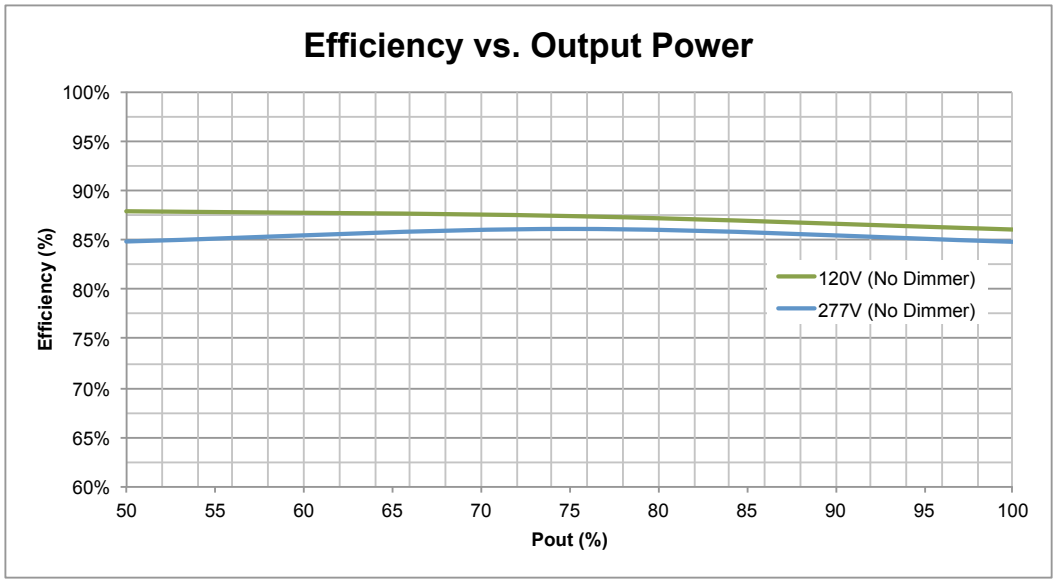


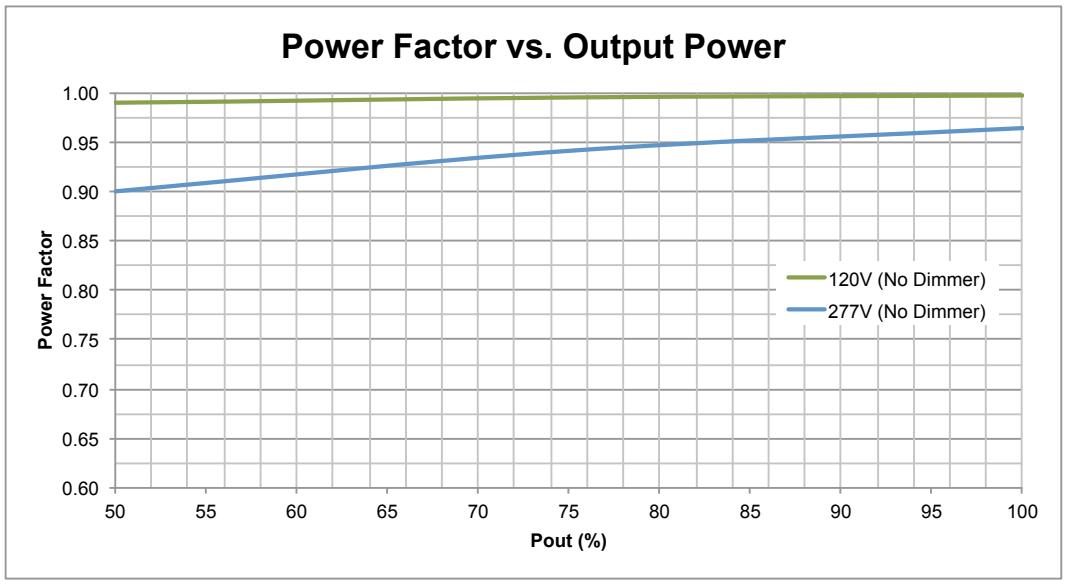


Efficiency and PF measured at 25°C.
Measurements made on model LC22-0350N-UNV-D.

# 22W | Constant Current Case Style D1

## GENERAL INFORMATION

| | |
|---|---|
| **LED Driver Type** | Constant Current (Class 2) |
| **Maximum Wattage** | 22 Watts |
| **Input Voltage** | 120 VAC ± 10% Dedicated |
| **Input Frequency** | 50/60Hz |
| **Total Harmonic Distortion** | <20% |

## CASE STYLE D1: METAL

## ELECTRICAL SPECIFICATIONS

| Watts | Rated Current | Output Voltage | Dimming Type | Input Voltage | Input Power | Input Current | Power Factor | Efficiency | Hatch Part Number |
|---|---|---|---|---|---|---|---|---|---|
| **Dimming Models** | | | | | | | | | |
| 22W | *350mA | 21 - 63 VDC | Phase Dimming | 120 VAC | 27W | 0.25A | >0.90 | 81% | *LC22-0350P-120-D1 |
| | 700mA | 10 - 32 VDC | Phase Dimming | 120 VAC | 27W | 0.25A | >0.90 | 81% | LC22-0700P-120-D1 |
| | 1050mA | 6 - 21 VDC | Phase Dimming | 120 VAC | 27W | 0.25A | >0.90 | 81% | LC22-1050P-120-D1 |

*Non- Class 2

## PRODUCT FEATURES

- Short circuit and overload protection
- Suitable for dry and damp locations
- Withstanding voltage: I/P – O/P 2kVAC
- Operating temperature range: -40°C to 90°C (measured at Tcase)
- MTBF: 376,000 hours @ 40°C ambient (~70°C case temp)
- Inrush Current: <10A Max @120VAC for 120V input models, cold start 25°C
- Inrush Current: <10A Max @230VAC for Universal input models, cold start 25°C

## APPROVALS

- UL 8750 recognized component
- EN61000-3-2
- EMC: Meets FCC47 CFR Part 15 (Class B) consumer limits

## MECHANICAL SPECIFICATIONS: CASE STYLE D1

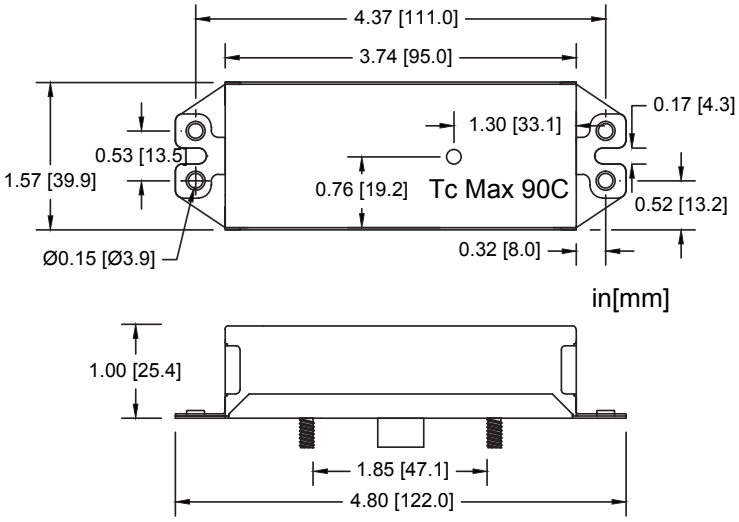


## DIMENSIONS [IN/MM]

| | |
|---|---|
| Length: | 3.74 [95.0] |
| Mounting: | 4.80 [122.0] |
| Width: | 1.57 [39.9] |
| Height: | 1.00 [25.4] |

## WIRING INFORMATION

| | |
|---|---|
| Input: | 12”, Black (L), White (N) #18AWG |
| Output: | 12”, Red (+), Blue (-) #18AWG |

## PACKAGING INFORMATION

| | |
|---|---|
| Weight: | 8.3oz |
| Quantity: | 60pc/carton |

## WARRANTY

- 5 year limited warranty

## RELATED PRODUCTS

- Case Style D: 4.8” x 1.6” x 1.0”
- Case Style S: 6.5” x 1.4” x 1.0”

# 22W | Constant Current Case Style S

## GENERAL INFORMATION

| | |
|---|---|
| **LED Driver Type** | Constant Current (Class 2) |
| **Maximum Wattage** | 22 Watts |
| **Input Voltage** | 120-277 VAC ± 10% Universal |
| **Input Frequency** | 50/60Hz |
| **Total Harmonic Distortion** | <20% |

## CASE STYLE S: METAL

## ELECTRICAL SPECIFICATIONS

| Watts | Rated Current | Output Voltage | Dimming Type | Input Voltage | Input Power | Input Current | Power Factor | Efficiency | Hatch Part Number |
|---|---|---|---|---|---|---|---|---|---|
| **Dimming Models** | | | | | | | | | |
| 22W | **350mA | 32 - 63 VDC | 0-10V Dimming | 120 - 277 VAC | 27W | 0.25/0.11A | >0.90 | 81% | **LC22-0350Z-UNV-S |
| | *500mA | 22 - 44 VDC | 0-10V Dimming | 120 - 277 VAC | 27W | 0.25/0.11A | >0.90 | 81% | *LC22-0500Z-UNV-S |
| | 600mA | 18 - 36 VDC | 0-10V Dimming | 120 - 277 VAC | 27W | 0.25/0.11A | >0.90 | 81% | LC22-0600Z-UNV-S |
| | 700mA | 16 - 32 VDC | 0-10V Dimming | 120 - 277 VAC | 27W | 0.25/0.11A | >0.90 | 81% | LC22-0700Z-UNV-S |
| | 1050mA | 12 - 21 VDC | 0-10V Dimming | 120 - 277 VAC | 27W | 0.25/0.11A | >0.90 | 81% | LC22-1050Z-UNV-S |

** Non-Class 2 *Class 2 US ONLY

## PRODUCT FEATURES

- Short circuit and overload protection
- Over temperature protection
- Suitable for dry and damp locations
- Withstanding voltage: I/P – O/P 2kVAC
- Operating temperature range: -40°C to 90°C (measured at Tcase)
- Surge voltage rating: L-N 2kV, L/N-GND 4kV
- Inrush Current: <10A Max @230VAC, cold start 25°C

## APPROVALS

- UL 8750 recognized component
- EN61000-3-2
- EMC: Meets FCC47 CFR Part 15 (Class B) consumer limits

## MECHANICAL SPECIFICATIONS: CASE STYLE S

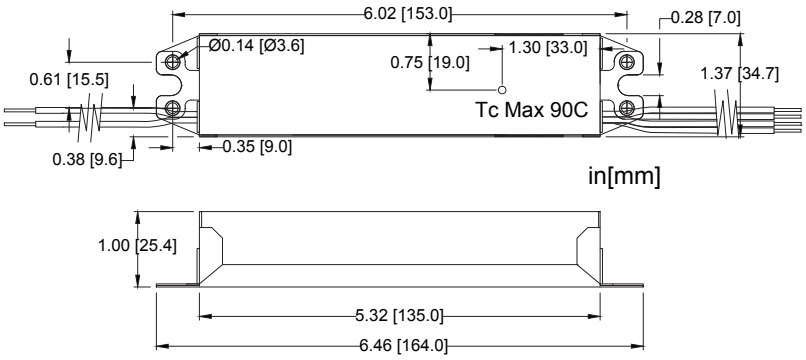


## DIMENSIONS [IN/MM]

| | |
|---|---|
| Length: | 5.32 [135.0] |
| Mounting: | 6.46 [164.0] |
| Width: | 1.37 [34.7] |
| Height: | 1.00 [25.4] |

## WIRING INFORMATION

| | |
|---|---|
| Input: | 12”, Black (L), White (N) #18AWG |
| Output: | 12”, Red (+), Blue (-) #18AWG |
| Dimming: | 12”, Purple (+), Grey (-) #18AWG |

## PACKAGING INFORMATION

| | |
|---|---|
| Weight: | 9 oz |
| Quantity: | 50pc/carton |

## WARRANTY

- 5 year limited warranty

## RELATED PRODUCTS

- Case Style D: 4.8” x 1.6” x 1.0”
- Case Style D1: 4.8” x 1.6” x 1.0”

# 22W | Constant Current Case Style S

## GENERAL INFORMATION

| | |
|---|---|
| **LED Driver Type** | Constant Current (Class 2) |
| **Maximum Wattage** | 22 Watts |
| **Input Voltage** | 120-277 VAC ± 10% Universal |
| **Input Frequency** | 50/60Hz |
| **Total Harmonic Distortion** | <20% |

## CASE STYLE S: METAL

## PERFORMANCE CURVES

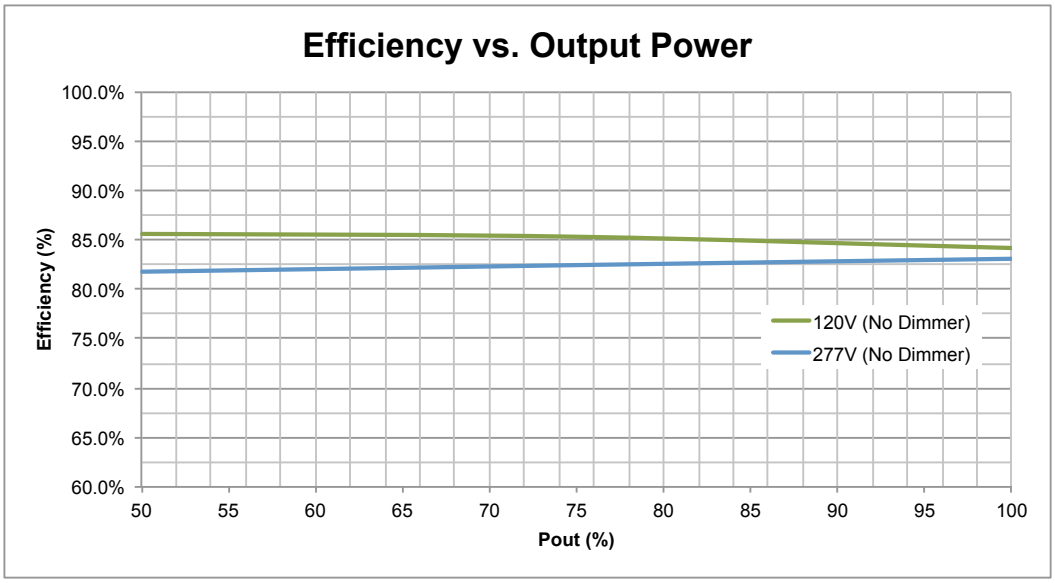


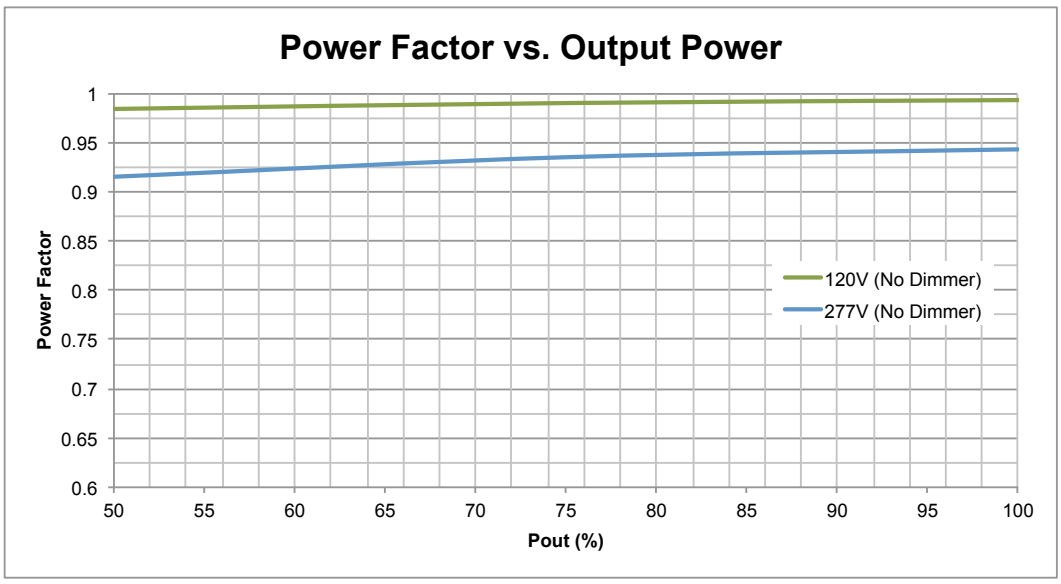


THD, PF and efficiency measured at 25°C.
Measurements made on model LC22-0350Z-UNV-S

# 22W | Constant Current Case Style S

## GENERAL INFORMATION

| | |
|---|---|
| **LED Driver Type** | Constant Current (Class 2) |
| **Maximum Wattage** | 22 Watts |
| **Input Voltage** | 120-277 VAC ± 10% Universal |
| **Input Frequency** | 50/60Hz |
| **Total Harmonic Distortion** | <20% |

## CASE STYLE S: METAL

## PERFORMANCE CURVES

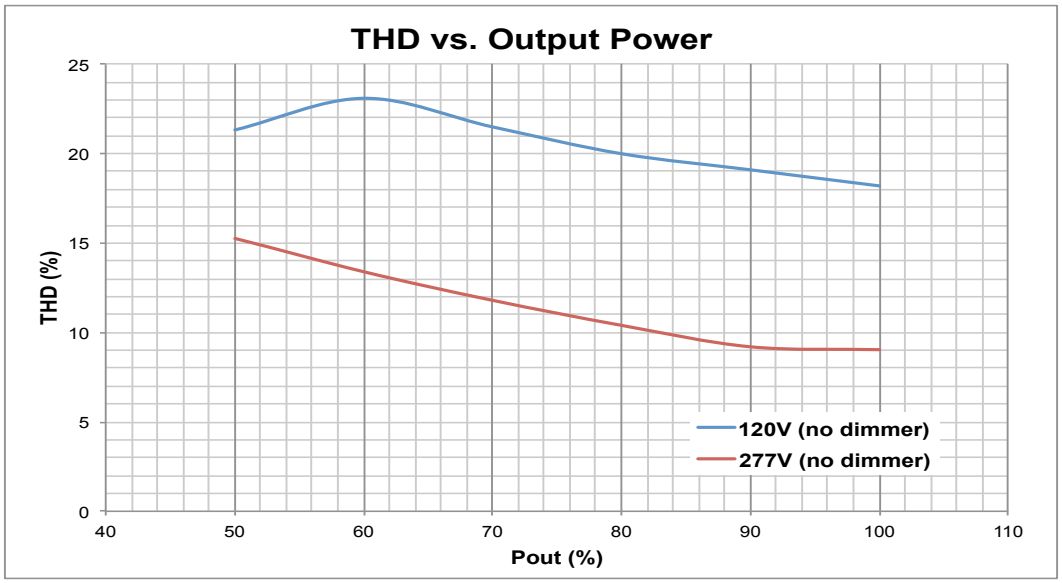


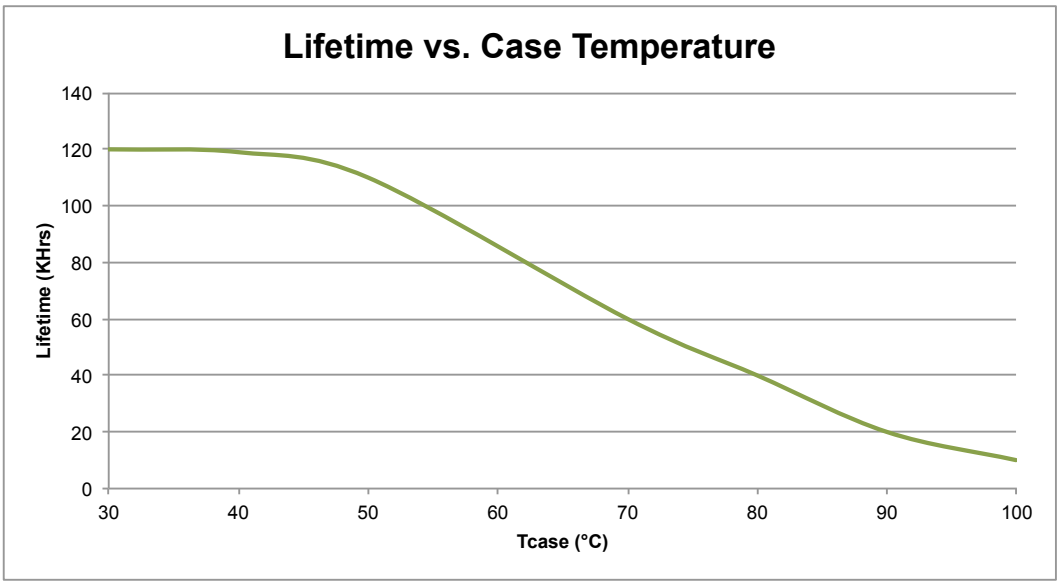


THD, PF and efficiency measured at 25°C.
Measurements made on model LC22-0350Z-UNV-S

# 22W | Constant Current Case Style S

## GENERAL INFORMATION

| | |
|---|---|
| **LED Driver Type** | Constant Current (Class 2) |
| **Maximum Wattage** | 22 Watts |
| **Input Voltage** | 120-277 VAC ± 10% Universal |
| **Input Frequency** | 50/60Hz |
| **Total Harmonic Distortion** | <20% |

## CASE STYLE S: METAL

## PERFORMANCE CURVES

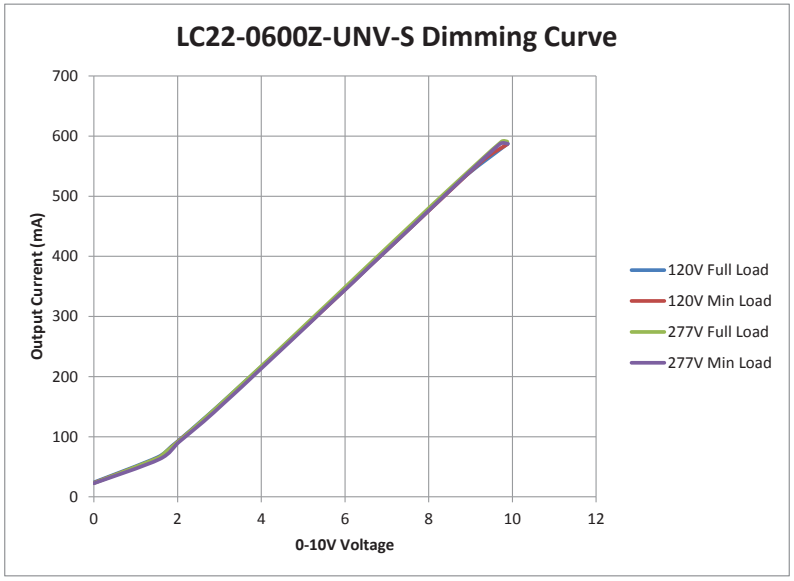

# 25W | Constant Current Case Style P

## GENERAL INFORMATION

| | |
|---|---|
| **LED Driver Type** | Constant Current (Class 2) |
| **Maximum Wattage** | 25 Watts |
| **Input Voltage** | 120 VAC ± 10% Dedicated<br>120-277 VAC ± 10% Universal<br>347 VAC ± 10% Dedicated |
| **Input Frequency** | 50/60Hz |
| **Total Harmonic Distortion** | <20% |

## CASE STYLE P: METAL

## ELECTRICAL SPECIFICATIONS

| Watts | Rated Current | Output Voltage | Dimming Type | Input Voltage | Input Power | Input Current | Power Factor | Efficiency | Hatch Part Number |
|---|---|---|---|---|---|---|---|---|---|
| **Non-Dimming Models** | | | | | | | | | |
| 25W | 700mA | 18 - 36 VDC | Non-Dimming | 347 VAC | 31W | 0.10A | >0.90 | 80% | LC25-0700N-347-P |
| **Dimming Models** | | | | | | | | | |
| 25W | 700mA | 12 - 36 VDC | Phase Dimming | 120 VAC | 30W | 0.29A | >0.90 | 80% | LC25-0700P-120-P |
| | 700mA | 12 - 36 VDC | 0 - 10V Dimming | 120 - 277 VAC | 31W | 0.26/0.11A | >0.90 | 80% | LC25-0700Z-UNV-P |
| | 700mA | 18 - 36 VDC | 0 - 10V Dimming | 347 VAC | 31W | 0.10A | >0.90 | 80% | LC25-0700Z-347-P |

## PRODUCT FEATURES

- Short circuit and overload protection
- Over temperature protection on 0-10V dimming models.
- Suitable for dry and damp locations
- Withstanding voltage: I/P – O/P 2kVAC
- Operating temperature range: -40°C to 90°C (measured at Tcase)
- MTBF: 440,000 hours @ 40°C ambient (~70°C case temp)
- Inrush Current: <10A Max @230VAC for Universal input models, cold start 25°C
- Inrush Current: <10A Max @120VAC for 120V input models, cold start 25°C

## APPROVALS

- UL 8750 recognized component
- EN61000-3-2
- EMC: Meets FCC47 CFR Part 15 (Class B) consumer limits

# 25W | Constant Current Case Style P

## GENERAL INFORMATION

| | |
|---|---|
| **LED Driver Type** | Constant Current (Class 2) |
| **Maximum Wattage** | 25 Watts |
| **Input Voltage** | 120 VAC ± 10% Dedicated<br>120-277 VAC ± 10% Universal<br>347 VAC ± 10% Dedicated |
| **Input Frequency** | 50/60Hz |
| **Total Harmonic Distortion** | <20% |

## CASE STYLE P: METAL

## MECHANICAL SPECIFICATIONS: CASE STYLE P

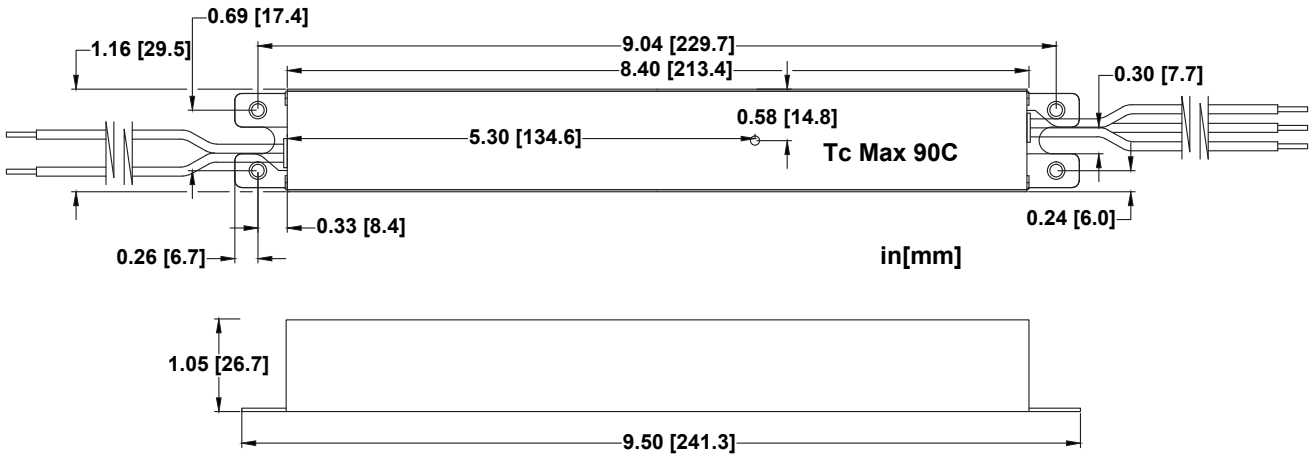


## DIMENSIONS [IN/MM]

| | |
|---|---|
| Length: | 8.40 [213.4] |
| Mounting: | 9.50 [241.3] |
| Width: | 1.16 [29.5] |
| Height: | 1.05 [26.7] |

## WIRING INFORMATION

| | |
|---|---|
| Input: | 12”, Black (L), White (N) #18AWG |
| Output: | 12”, Red (+), Blue (-) #18AWG |
| Dimming: | 12”, Purple (+), Grey (-) # 22AWG |

## PACKAGING INFORMATION

| | |
|---|---|
| Weight: | 13oz |
| Quantity: | 20pc/carton |

## WARRANTY

- 5 year limited warranty

## RELATED PRODUCT

- Case Style Q: 3.1” x 3.0” x 1.0”

# 25W | Constant Current Case Style P

## GENERAL INFORMATION

| | |
|---|---|
| **LED Driver Type** | Constant Current (Class 2) |
| **Maximum Wattage** | 25 Watts |
| **Input Voltage** | 120 VAC ± 10% Dedicated<br>120-277 VAC ± 10% Universal<br>347 VAC ± 10% Dedicated |
| **Input Frequency** | 50/60Hz |
| **Total Harmonic Distortion** | <20% |

## CASE STYLE P: METAL

## PERFORMANCE CURVES

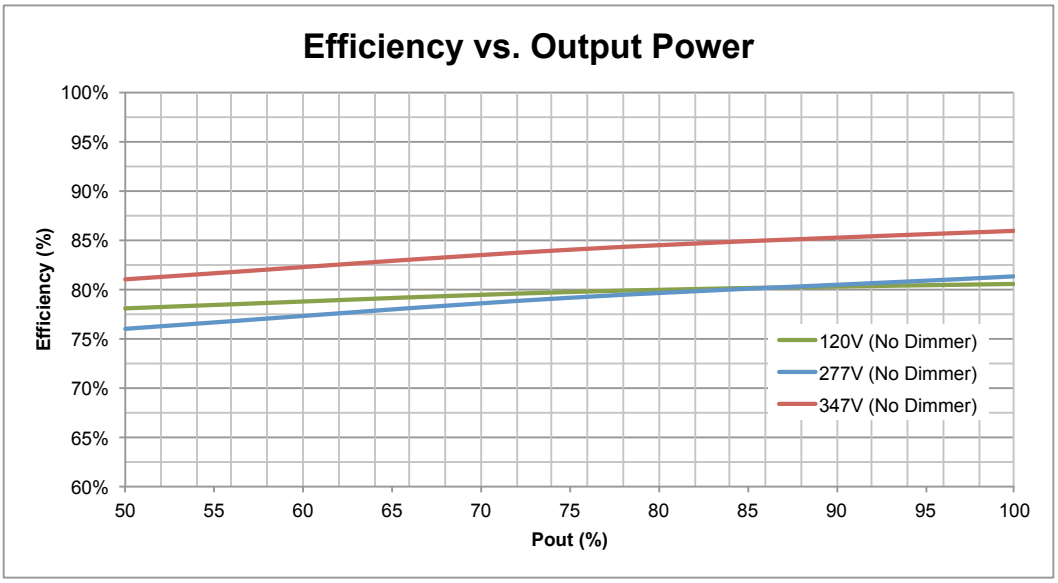


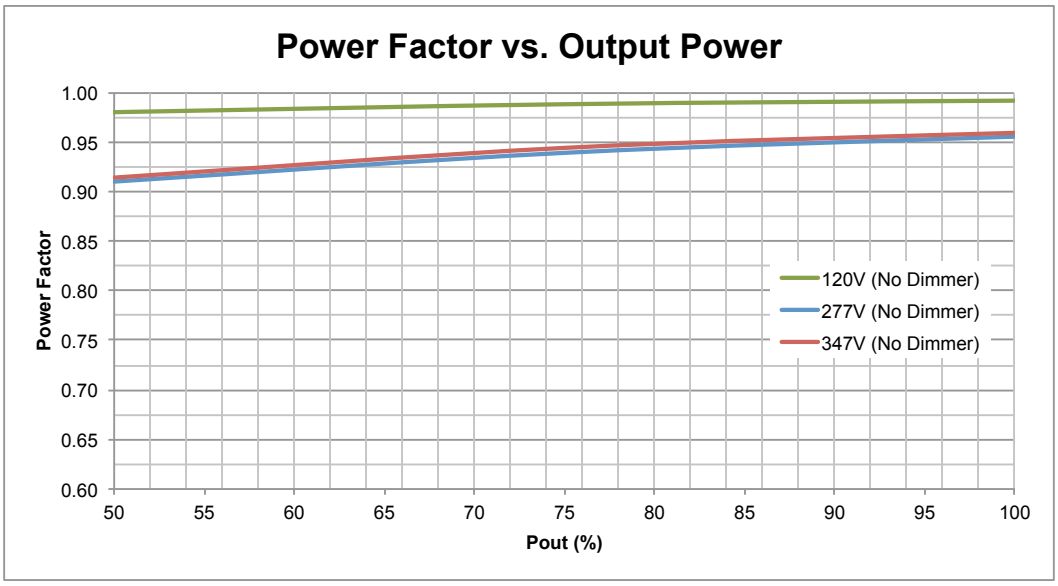


Efficiency and PF measured at 25°C.
Measurements made on model LC25-0700Z-UNV-P.

# 25W Constant Current Case Style P

## GENERAL INFORMATION

| | |
|---|---|
| **LED Driver Type** | Constant Current (Class 2) |
| **Maximum Wattage** | 25 Watts |
| **Input Voltage** | 120 VAC ± 10% Dedicated<br>120-277 VAC ± 10% Universal<br>347 VAC ± 10% Dedicated |
| **Input Frequency** | 50/60Hz |
| **Total Harmonic Distortion** | <20% |

## CASE STYLE P: METAL

## PERFORMANCE CURVES

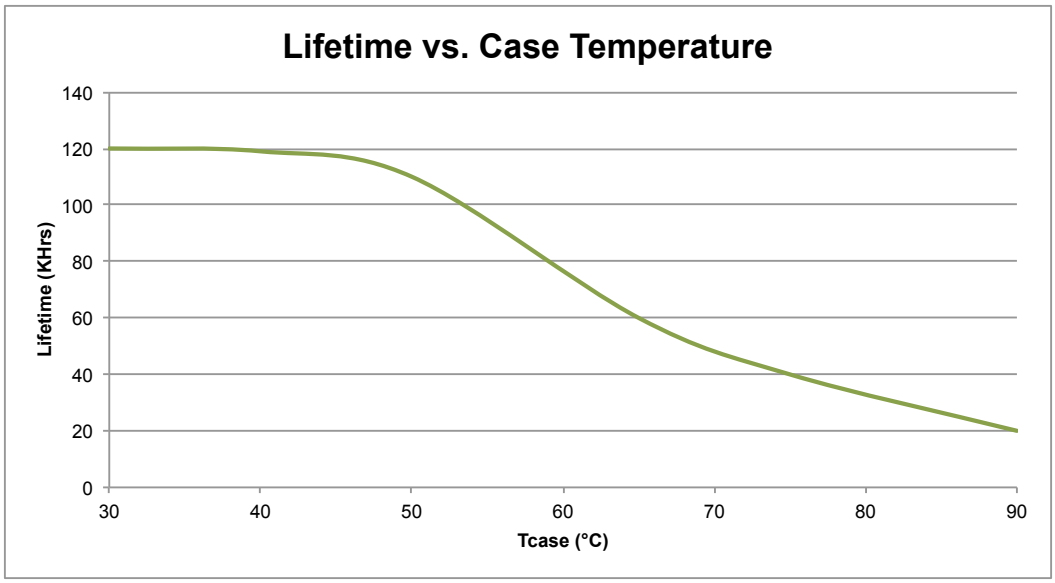


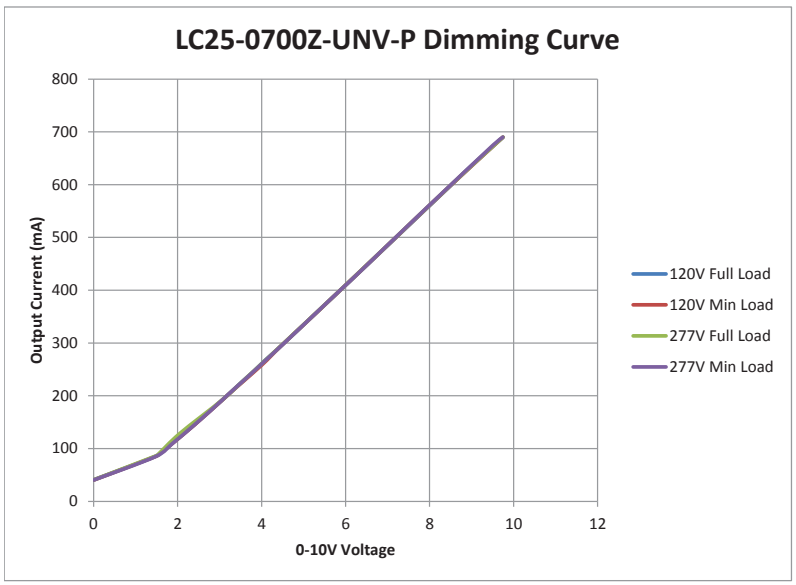

# 25W Constant Current Case Style Q

## GENERAL INFORMATION

| | |
|---|---|
| **LED Driver Type** | Constant Current (Class 2) |
| **Maximum Wattage** | 25Watts |
| **Input Voltage** | 120 VAC ± 10% Dedicated<br>120 - 277 VAC ± 10% Universal |
| **Input Frequency** | 50/60Hz |
| **Total Harmonic Distortion** | <20% |

## CASE STYLE Q: POLYCARBONATE

## ELECTRICAL SPECIFICATIONS

| Watts | Rated Current | Output Voltage | Dimming Type | Input Voltage | Input Power | Input Current | Power Factor | Efficiency | Hatch Part Number |
|---|---|---|---|---|---|---|---|---|---|
| **Dimming Models** | | | | | | | | | |
| 25W | **350mA | 24-72 VDC | 0-10V Dimming | 120 - 277 VAC | 31W | 0.26/0.11A | >0.90 | 80% | **LC25-0350Z-UNV-Q |
| | *500mA | 25 - 50 VDC | 0-10V Dimming | 120 - 277 VAC | 31W | 0.26/0.11A | >0.90 | 80% | *LC25-0500Z-UNV-Q |
| | 600mA | 21 - 42 VDC | 0-10V Dimming | 120 - 277 VAC | 30W | 0.31/0.14A | >0.90 | 80% | LC25-0600Z-UNV-Q |
| | 700mA | 12 - 36 VDC | 0-10V Dimming | 120 - 277 VAC | 31W | 0.26/0.11A | >0.90 | 80% | LC25-0700Z-UNV-Q |
| | 800mA | 16 - 32 VDC | 0-10V Dimming | 120 - 277 VAC | 30W | 0.31/0.14A | >0.90 | 80% | LC25-0800Z-UNV-Q |
| | 900mA | 14 - 28 VDC | 0-10V Dimming | 120 - 277 VAC | 30W | 0.31/0.14A | >0.90 | 80% | LC25-0900Z-UNV-Q |
| | 1000mA | 12 - 25 VDC | 0-10V Dimming | 120 - 277 VAC | 30W | 0.31/0.14A | >0.90 | 80% | LC25-1000Z-UNV-Q |
| | 1050mA | 8 - 24 VDC | 0-10V Dimming | 120 - 277 VAC | 31W | 0.26/0.11A | >0.90 | 80% | LC25-1050Z-UNV-Q |
| | 1100mA | 12 - 23 VDC | 0-10V Dimming | 120 - 277 VAC | 31W | 0.31/0.14A | >0.90 | 80% | LC25-1100Z-UNV-Q |
| | 1200mA | 12 - 21 VDC | 0-10V Dimming | 120 - 277 VAC | 31W | 0.26/0.11A | >0.90 | 80% | LC25-1200Z-UNV-Q |
| | 1400mA | 6 - 18 VDC | 0-10V Dimming | 120-277 VAC | 32W | 0.28/0.13A | >0.90 | 80% | LC25-1400Z-UNV-Q |
| | **350mA | 24 - 72 VDC | Phase Dimming | 120 VAC | 31W | 0.25A | >0.90 | 80% | **LC25-0350P-120-Q |
| | *500mA | 16 - 50 VDC | Phase Dimming | 120 VAC | 30W | 0.29A | >0.90 | 81% | *LC25-0500P-120-Q |
| | 700mA | 12 - 36 VDC | Phase Dimming | 120 VAC | 30W | 0.26A | >0.90 | 81% | LC25-0700P-120-Q |
| | 800mA | 13 - 32 VDC | Phase Dimming | 120 VAC | 30W | 0.29A | >0.90 | 81% | LC25-0800P-120-Q |
| | 900mA | 9 - 28 VDC | Phase Dimming | 120 VAC | 30W | 0.25A | >0.90 | 81% | LC25-0900P-120-Q |
| | 1000mA | 8 - 25 VDC | Phase Dimming | 120 VAC | 30W | 0.29A | >0.90 | 81% | LC25-1000P-120-Q |
| | 1050mA | 8 - 24 VDC | Phase Dimming | 120 VAC | 31W | 0.25A | >0.90 | 80% | LC25-1050P-120-Q |
| | 1100mA | 7 - 23 VDC | Phase Dimming | 120 VAC | 30W | 0.29A | >0.90 | 81% | LC25-1100P-120-Q |
| | 1200mA | 7 - 21 VDC | Phase Dimming | 120 VAC | 30W | 0.29A | >0.90 | 81% | LC25-1200P-120-Q |

** Non-Class 2 * Class 2 US ONLY

**CASE DIMENSIONS & MECHANICAL SPECIFICATIONS ON PAGE 2**

# 25W | Constant Current Case Style Q

## GENERAL INFORMATION

| | |
|---|---|
| **LED Driver Type** | Constant Current (Class 2) |
| **Maximum Wattage** | 25Watts |
| **Input Voltage** | 120 VAC ± 10% Dedicated<br>120 - 277 VAC ± 10% Universal |
| **Input Frequency** | 50/60Hz |
| **Total Harmonic Distortion** | <20% |

## CASE STYLE Q: POLYCARBONATE

## PRODUCT FEATURES

- Short circuit and overload protection
- Suitable for dry and damp locations
- Withstanding voltage: I/P – O/P 2kVAC
- Operating temperature range: -40°C to 90°C (measured at Tcase)
- MTBF: 374,000 hours @ 40°C ambient (~70°C case temp)
- Surge voltage rating: L-N 2kV, L/N-GND 4kV
- Inrush Current: <5A Max @120VAC for 120V input models, cold start 25°C
- Inrush Current: <10A Max @230VAC for Universal input models, cold start 25°C

## APPROVALS

- UL 8750 recognized component
- EN61000-3-2
- EMC: Meets FCC47 CFR Part 15 (Class B) consumer limits
- IP66

## MECHANICAL SPECIFICATIONS: CASE STYLE Q

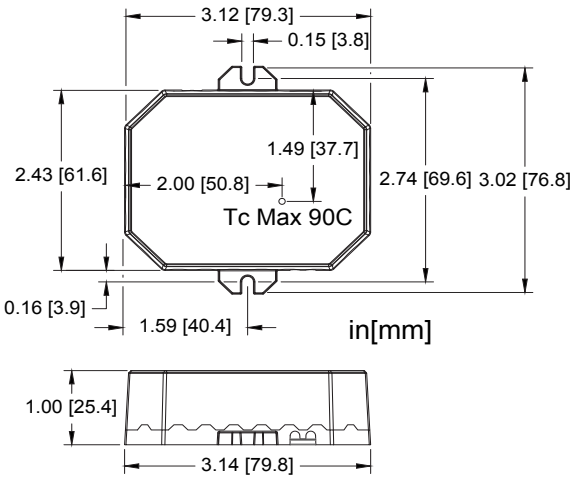


## DIMENSIONS [IN/MM]

| | |
|---|---|
| Length: | 2.43 [61.6] |
| Mounting: | 3.02 [76.8] |
| Width: | 3.14 [79.8] |
| Height: | 1.00 [25.4] |

## WIRING INFORMATION

| | |
|---|---|
| Input: | 12", Black (L), White (N) #18AWG |
| Output: | 12", Red (+), Blue (-) #18AWG |
| Dimming: | 12", Purple (+), Grey (-) # 18AWG |

## PACKAGING INFORMATION

| | |
|---|---|
| Weight: | 6.4 oz |
| Quantity: | 50pc/carton |

## WARRANTY

- 5 year limited warranty

## RELATED PRODUCT

- Case Style P: 9.5" x 1.2" x 1.0"

# 25W | Constant Current Case Style Q

## GENERAL INFORMATION

| | |
|---|---|
| **LED Driver Type** | Constant Current (Class 2) |
| **Maximum Wattage** | 25Watts |
| **Input Voltage** | 120 VAC ± 10% Dedicated<br>120 - 277 VAC ± 10% Universal |
| **Input Frequency** | 50/60Hz |
| **Total Harmonic Distortion** | <20% |

## CASE STYLE Q: POLYCARBONATE

## PERFORMANCE CURVES

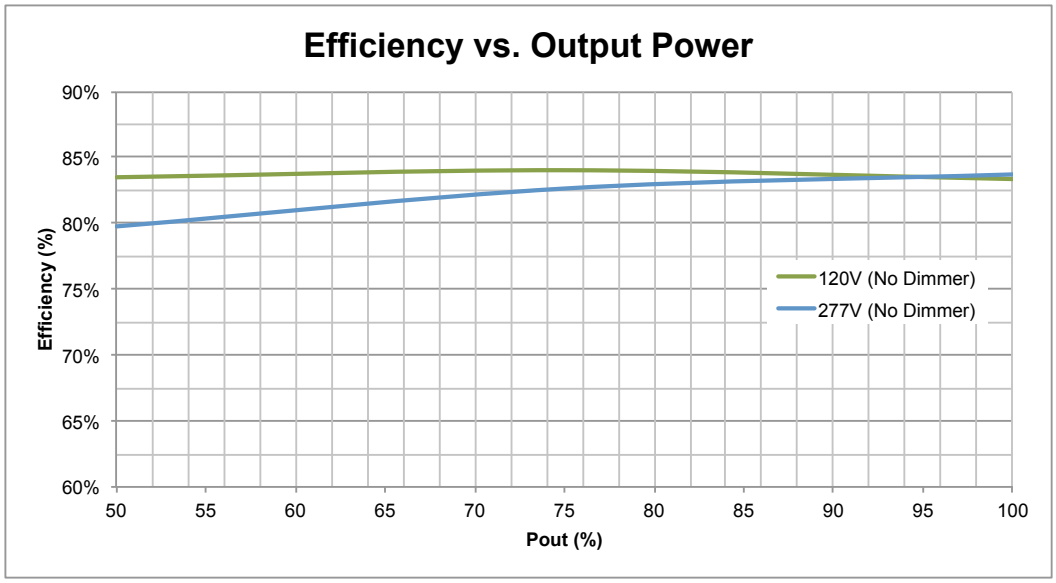


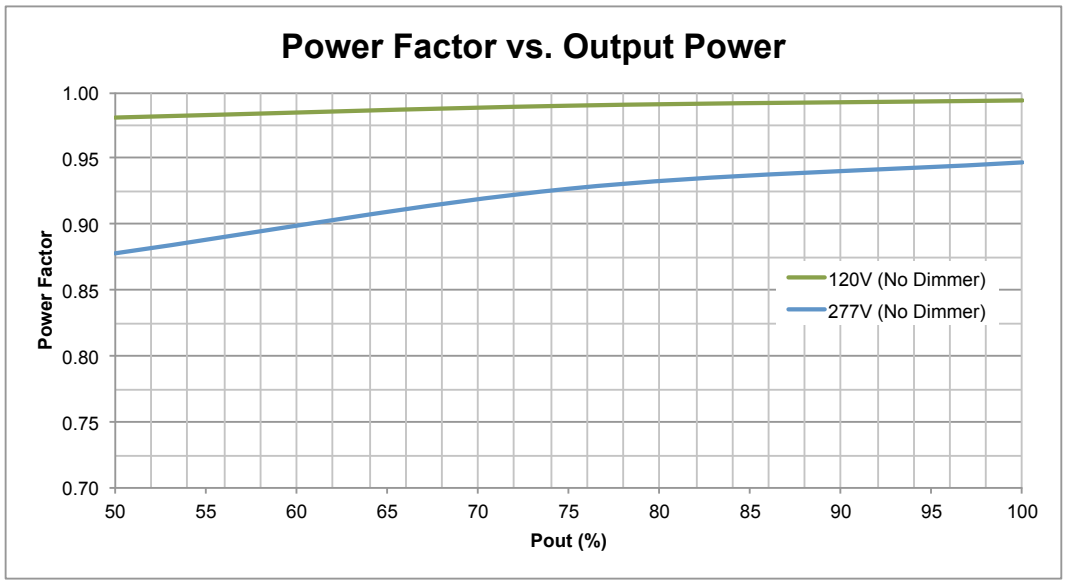


Efficiency and PF measured at 25°C.
Measurements made on model LC25-0700Z-UNV-Q.

# 25W Constant Current Case Style Q

## GENERAL INFORMATION

| | |
|---|---|
| **LED Driver Type** | Constant Current (Class 2) |
| **Maximum Wattage** | 25Watts |
| **Input Voltage** | 120 VAC ± 10% Dedicated<br>120 - 277 VAC ± 10% Universal |
| **Input Frequency** | 50/60Hz |
| **Total Harmonic Distortion** | <20% |

## CASE STYLE Q: POLYCARBONATE

## PERFORMANCE CURVES

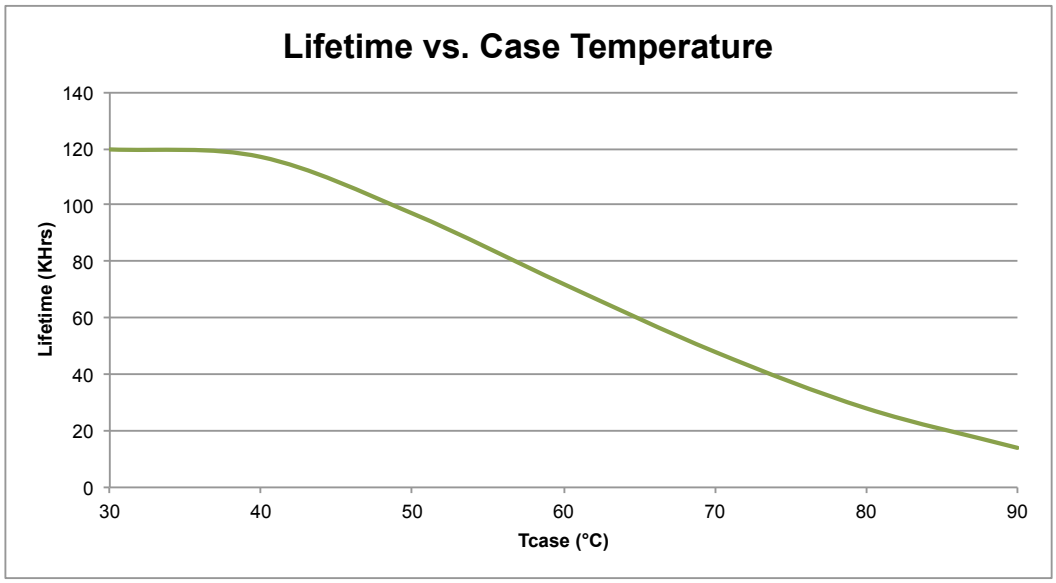


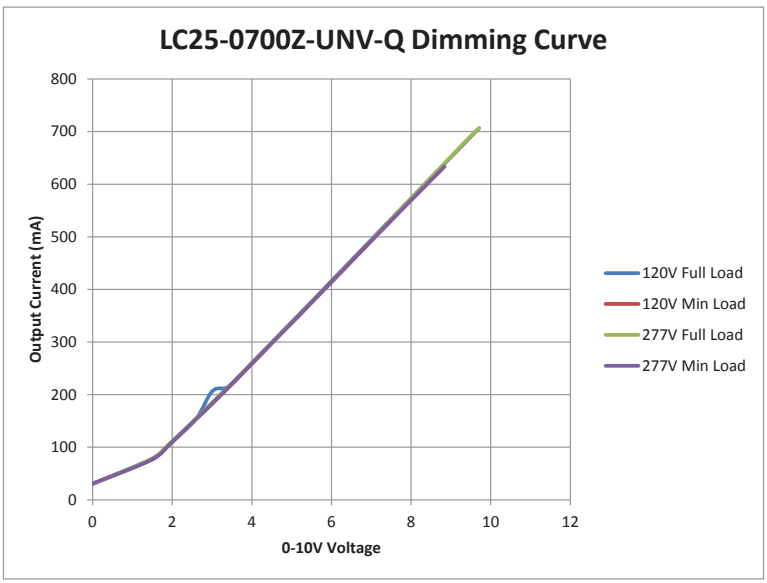

# 30W | Constant Current Case Style FF

## GENERAL INFORMATION

| | |
|---|---|
| **LED Driver Type** | Constant Current (Class 2) |
| **Maximum Wattage** | 30 Watts |
| **Input Voltage** | 120 - 277 VAC ± 10% Universal |
| **Input Frequency** | 50/60Hz |
| **Total Harmonic Distortion** | <20% |

## CASE STYLE FF: POLYCARBONATE

## ELECTRICAL SPECIFICATIONS

| Watts | Rated Current | Output Voltage | Dimming Type | Input Voltage | Input Power | Input Current | Power Factor | Efficiency | Hatch Part Number |
|---|---|---|---|---|---|---|---|---|---|
| **Dimming Models** | | | | | | | | | |
| 30W | *350mA | 28 - 85 VDC | 0-10V Dimming | 120 - 277 VAC | 34W | 0.28/0.13A | >0.90 | 89% | *LC30-0350Z-UNV-FF |
| | *450mA | 22 - 66 VDC | 0-10V Dimming | 120 - 277 VAC | 33W | 0.28/0.13A | >0.90 | 88% | *LC30-0450Z-UNV-FF |
| | 700mA | 14 - 42 VDC | 0-10V Dimming | 120 - 277 VAC | 33W | 0.28/0.13A | >0.90 | 87% | LC30-0700Z-UNV-FF |
| | 830mA | 18 - 36 VDC | 0-10V Dimming | 120 - 277 VAC | 33W | 0.28/0.13A | >0.90 | 86% | LC30-0830Z-UNV-FF |

*Non- Class 2

## PRODUCT FEATURES

- Short circuit and overload protection
- Over temperature protection
- Suitable for dry and damp locations
- Withstanding voltage: I/P – O/P 2kVAC
- Surge rating: 2kV L-N
- Operating temperature range: -30°C to 90°C (measured at Tcase)
- Dimming range: 10%-100%

## APPROVALS

- UL 8750 recognized component
- EN61000-3-2
- EMC: Meets FCC47 CFR Part 15 (Class B) consumer limits
- IP66

## MECHANICAL SPECIFICATIONS: CASE STYLE FF

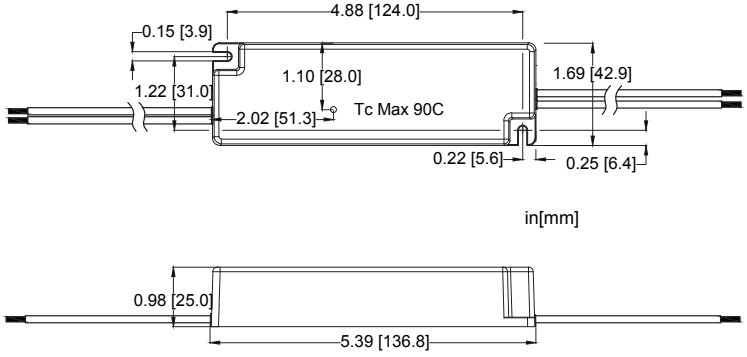


## DIMENSIONS [IN/MM]

| | |
|---|---|
| Length: | 4.88 [124.0] |
| Mounting: | 5.39 [136.8] |
| Width: | 1.69 [42.9] |
| Height: | 0.98 [25.0] |

## WIRING INFORMATION

| | |
|---|---|
| Input: | 6”, Black (L), White (N) #18AWG |
| Output: | 6”, Red (+), Blue (-) #18AWG |
| Dimming: | 6”, Purple (+), Grey (-) # 18AWG |

## PACKAGING INFORMATION

| | |
|---|---|
| Weight: | 8.3oz |
| Quantity: | 20pc/carton |

## WARRANTY

- 5 year limited warranty

HATCH LED DRIVERS

# 30W | Constant Current Case Style FF

## GENERAL INFORMATION

| | |
|---|---|
| **LED Driver Type** | Constant Current (Class 2) |
| **Maximum Wattage** | 30 Watts |
| **Input Voltage** | 120 - 277 VAC ± 10% Universal |
| **Input Frequency** | 50/60Hz |
| **Total Harmonic Distortion** | <20% |

## CASE STYLE FF: POLYCARBONATE

## PERFORMANCE CURVES

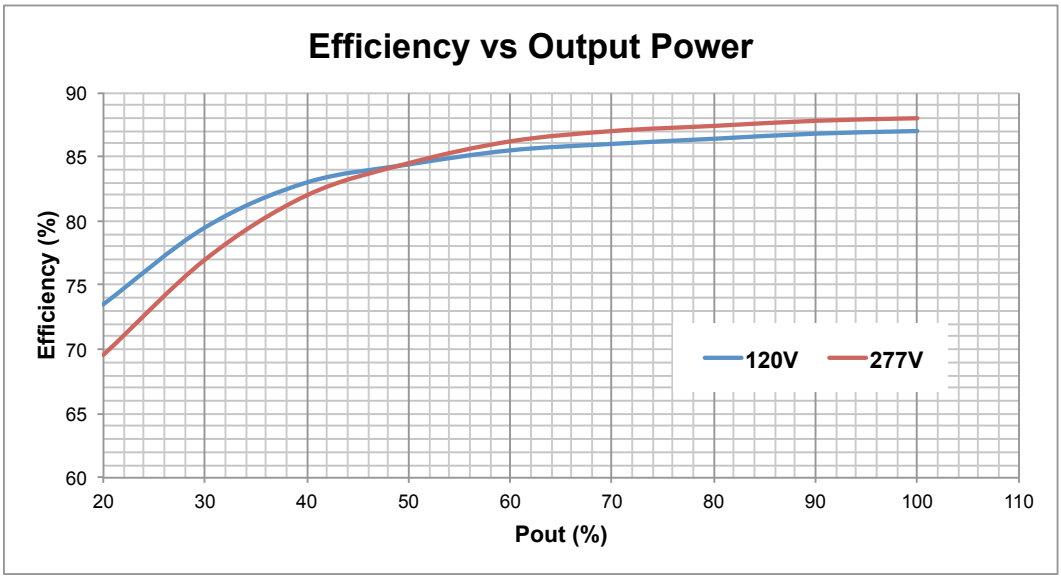


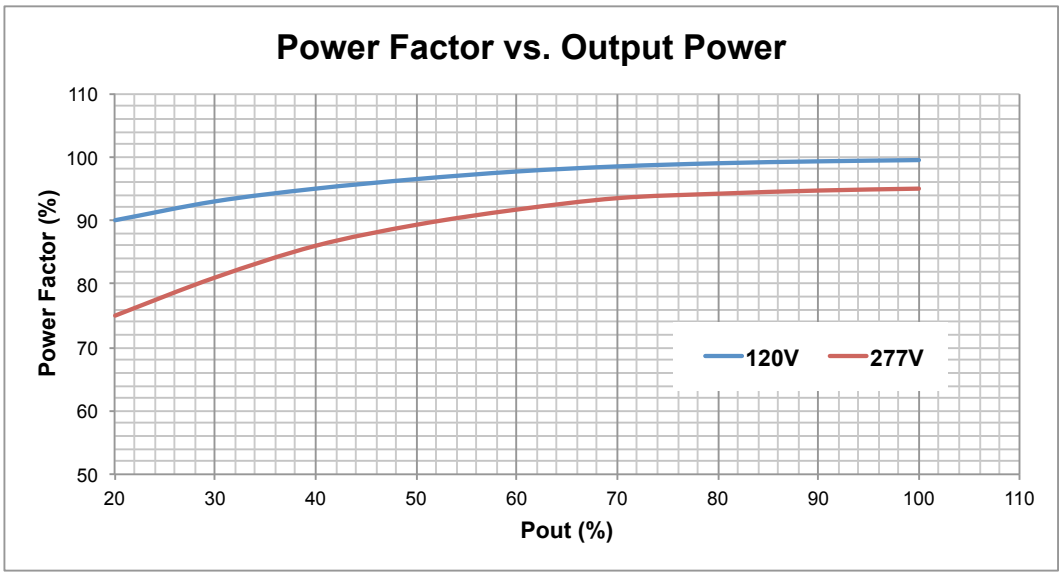


THD, PF and efficiency measured at 25°C.
Measurements made on model LC30-0830Z-UNV-FF

# 30W Constant Current Case Style FF

## GENERAL INFORMATION

| | |
|---|---|
| **LED Driver Type** | Constant Current (Class 2) |
| **Maximum Wattage** | 30 Watts |
| **Input Voltage** | 120 - 277 VAC ± 10% Universal |
| **Input Frequency** | 50/60Hz |
| **Total Harmonic Distortion** | <20% |

## CASE STYLE FF: POLYCARBONATE

## PERFORMANCE CURVES

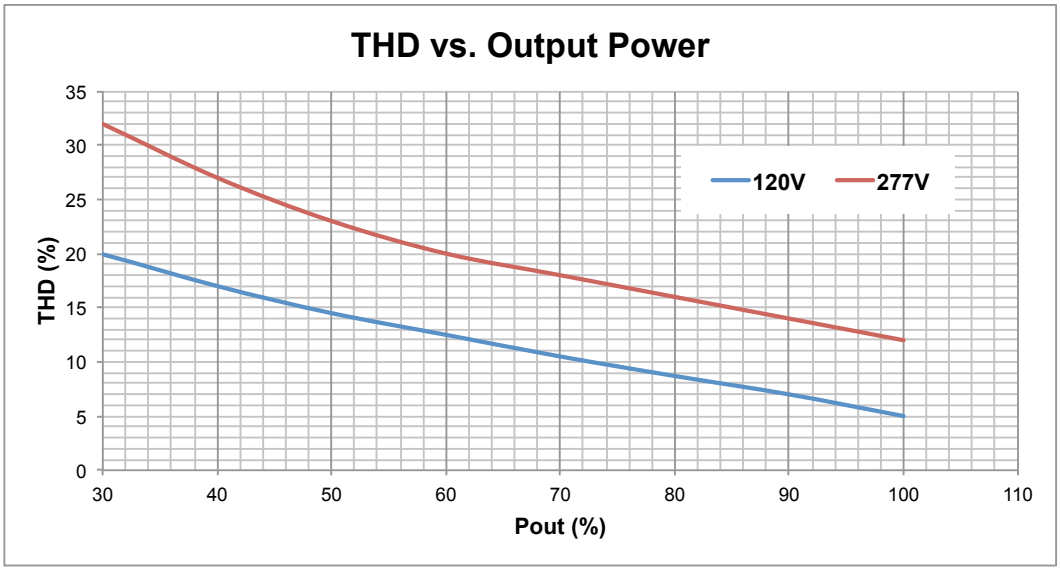


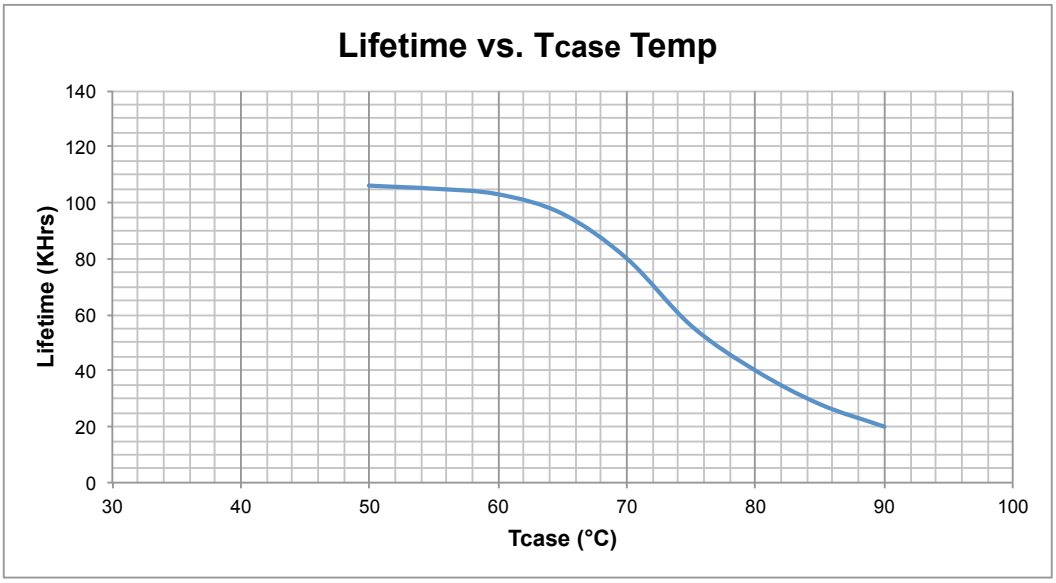


THD, PF and efficiency measured at 25°C.
Measurements made on model LC30-0830Z-UNV-FF

# 36W | Constant Current Case Style G

## GENERAL INFORMATION

| | |
|---|---|
| **LED Driver Type** | Constant Current (Class 2) |
| **Maximum Wattage** | 36 Watts |
| **Input Voltage** | 120 - 277 VAC ± 10% Universal |
| **Input Frequency** | 50/60Hz |
| **Total Harmonic Distortion** | <20% |

## CASE STYLE G: METAL

## ELECTRICAL SPECIFICATIONS

| Watts | Rated Current | Output Voltage | Dimming Type | Input Voltage | Input Power | Input Current | Power Factor | Efficiency | Hatch Part Number |
|---|---|---|---|---|---|---|---|---|---|
| **Dimming Models** | | | | | | | | | |
| 36W | *700mA | 26 - 52 VDC | 0-10V Dimming | 120 - 277 VAC | 43W | 0.41/0.19A | >0.90 | 83% | *LC36-0700Z-UNV-G |
| | 900mA | 18 - 36 VDC | 0-10V Dimming | 120 - 277 VAC | 41W | 0.33/0.19A | >0.90 | 81% | LC36-0900Z-UNV-G |
| | 1050mA | 17 - 34 VDC | 0-10V Dimming | 120 - 277 VAC | 43W | 0.41/0.19A | >0.90 | 82% | LC36-1050Z-UNV-G |
| | 1500mA | 12 - 24 VDC | 0-10V Dimming | 120 - 277 VAC | 46W | 0.41/0.19A | >0.90 | 80% | LC36-1500Z-UNV-G |

*Class 2 US ONLY

## PRODUCT FEATURES

- Short circuit and overload protection
- Over temperature protection
- Suitable for dry and damp locations
- Withstanding voltage: I/P – O/P 2kVAC
- Operating temperature range: -40°C to 90°C (measured at Tcase)
- MTBF: 384,000 hours @ 40°C ambient (~70°C case temp)
- Surge voltage rating: L-N 2kV, L/N-GND 4kV
- Inrush Current: <10A Max @230VAC, cold start 25°C

## APPROVALS

- UL 8750 recognized component
- EN61000-3-2
- EMC: Meets FCC47 CFR Part 15 (Class B) consumer limits

## MECHANICAL SPECIFICATIONS: CASE STYLE G

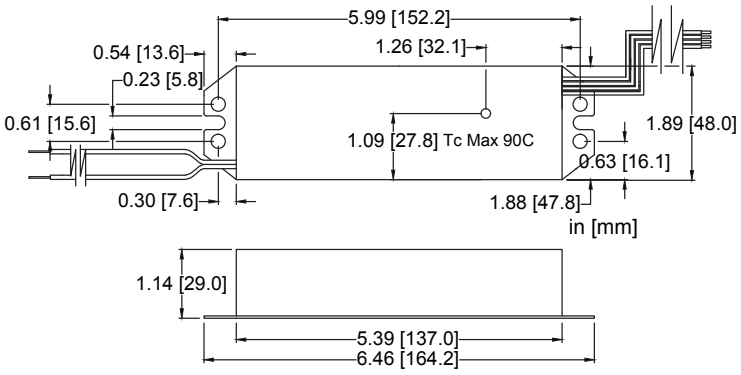


## DIMENSIONS [IN/MM]

| | |
|---|---|
| Length: | 5.39 [137.0] |
| Mounting: | 6.46 [164.2] |
| Width: | 1.89 [48.0] |
| Height: | 1.14 [29.0] |

## WIRING INFORMATION

| | |
|---|---|
| Input: | 12”, Black (L), White (N) #18AWG |
| Output: | 12”, Red (+), Blue (-) #18AWG |
| Dimming: | 12”, Purple (+), Grey (-) # 18AWG |

## PACKAGING INFORMATION

| | |
|---|---|
| Weight: | 13.2oz |
| Quantity: | 40pc/carton |

## WARRANTY

- 5 year limited warranty

## RELATED PRODUCT

- Case Style P: 9.5” x 1.2” x 1.0”

# 36W | Constant Current Case Style G

## GENERAL INFORMATION

| | |
|---|---|
| **LED Driver Type** | Constant Current (Class 2) |
| **Maximum Wattage** | 36 Watts |
| **Input Voltage** | 120 - 277 VAC ± 10% Universal |
| **Input Frequency** | 50/60Hz |
| **Total Harmonic Distortion** | <20% |

## CASE STYLE G: METAL

## PERFORMANCE CURVES

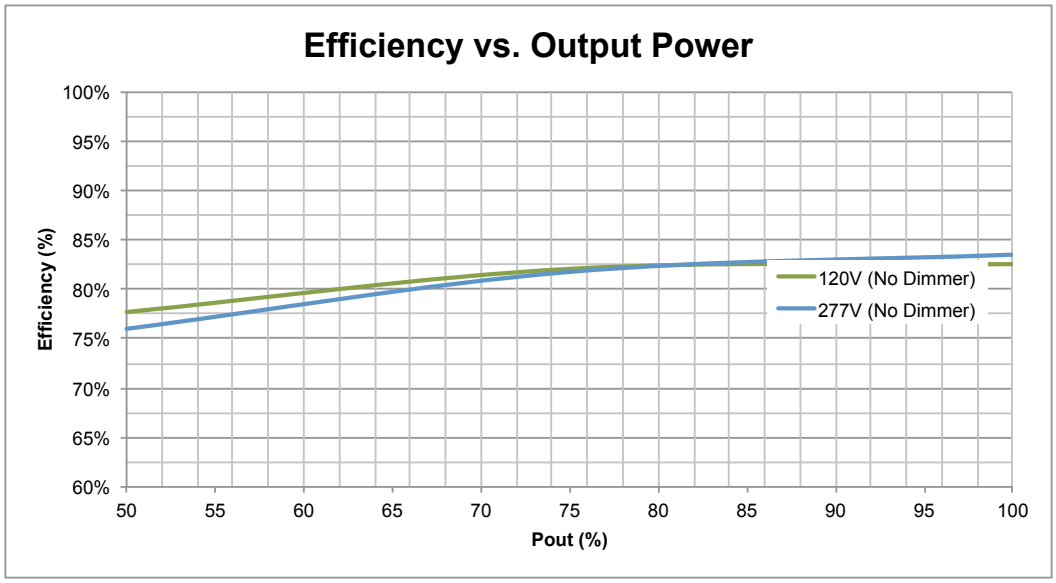


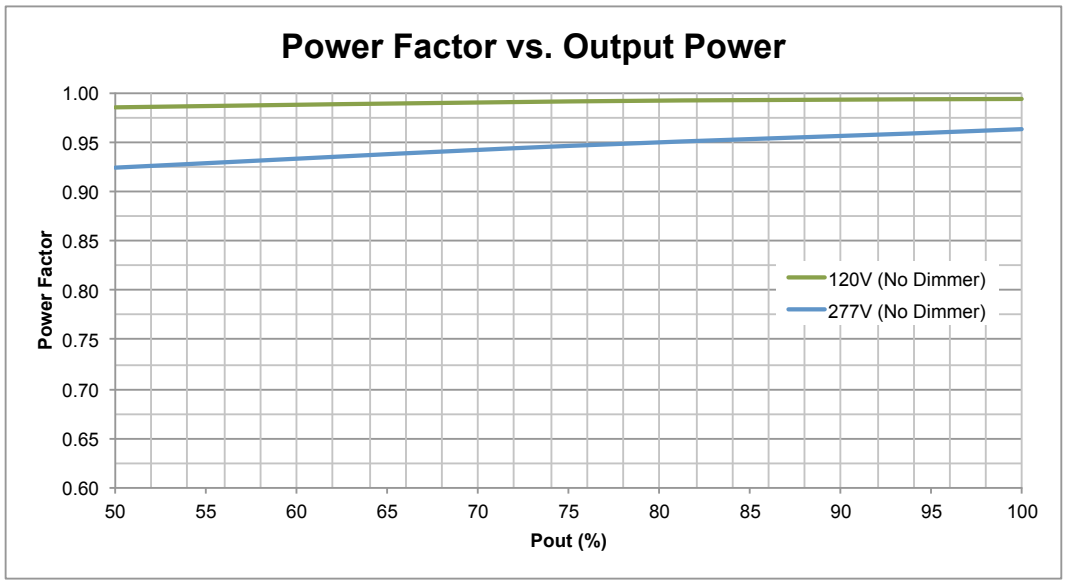


Efficiency and PF measured at 25°C.
Measurements made on model LC36-1050Z-UNV-G.

# 36W | Constant Current Case Style G

## GENERAL INFORMATION

| | |
|---|---|
| **LED Driver Type** | Constant Current (Class 2) |
| **Maximum Wattage** | 36 Watts |
| **Input Voltage** | 120 - 277 VAC ± 10% Universal |
| **Input Frequency** | 50/60Hz |
| **Total Harmonic Distortion** | <20% |

## CASE STYLE G: METAL

## PERFORMANCE CURVES

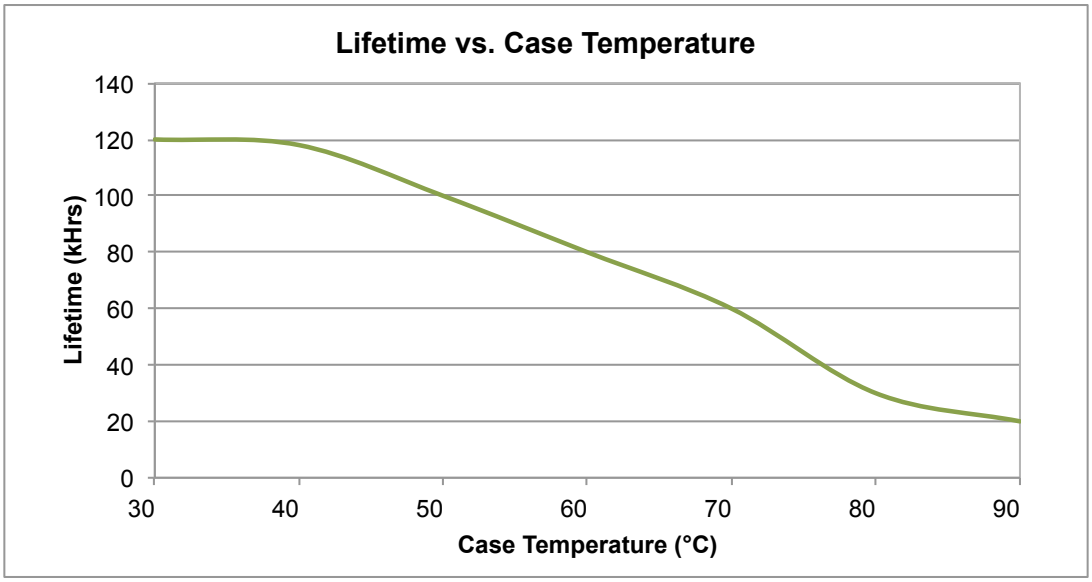


Efficiency and PF measured at 25°C.
Measurements made on model LC36-1050Z-UNV-G.

HATCH™ LED DRIVERS

# 36W | CONSTANT CURRENT CASE STYLE P

## GENERAL INFORMATION

| | |
|---|---|
| **LED Driver Type** | Constant Current (Class 2) |
| **Maximum Wattage** | 36 Watts |
| **Input Voltage** | 120 VAC ± 10% Dedicated<br>120 - 277 VAC ± 10% Universal |
| **Input Frequency** | 50/60Hz |
| **Total Harmonic Distortion** | <20% |

## CASE STYLE P: METAL

## ELECTRICAL SPECIFICATIONS

| Watts | Rated Current | Output Voltage | Dimming Type | Input Voltage | Input Power | Input Current | Power Factor | Efficiency | Hatch Part Number |
|---|---|---|---|---|---|---|---|---|---|
| **Non-Dimming Models** | | | | | | | | | |
| 36W | 1000mA | 18 - 36 VDC | Non-Dimming | 120 - 277 VAC | 43W | 0.41/0.19A | >0.90 | 82% | LC36-1000N-UNV-P |
| | 1000mA | 18 - 36 VDC | Non-Dimming | 120 VAC | 43W | 0.40A | >0.90 | 83% | LC36-1000N-120-P |
| **Dimming Models** | | | | | | | | | |
| 36W | 700mA | 24 - 42 VDC | 0-10V Dimming | 120 - 277 VAC | 43W | 0.41/0.19A | >0.90 | 83% | LC36-0700Z-UNV-P |
| | 1000mA | 12 - 24 VDC | 0-10V Dimming | 120 - 277 VAC | 43W | 0.41/0.19A | >0.90 | 82% | LC36-1000Z-UNV-P |
| | 1000mA | 18 - 36 VDC | 0-10V Dimming | 120 VAC | 43W | 0.39A | >0.90 | 82% | LC36-1000Z-120-P |
| | 1100mA | 17 - 33 VDC | 0-10V Dimming | 120 VAC | 43W | 0.39A | >0.90 | 82% | LC36-1100Z-120-P |
| | 1200mA | 15 - 30 VDC | 0-10V Dimming | 120 VAC | 43W | 0.39A | >0.90 | 82% | LC36-1200Z-120-P |
| | 1000mA | 12 - 36 VDC | Phase Dimming | 120 VAC | 43W | 0.40A | >0.90 | 82% | LC36-1000P-120-P |
| | 1100mA | 11 - 33 VDC | Phase Dimming | 120 VAC | 43W | 0.40A | >0.90 | 82% | LC36-1100P-120-P |
| | 1200mA | 10 - 30 VDC | Phase Dimming | 120 VAC | 43W | 0.40A | >0.90 | 82% | LC36-1200P-120-P |

## PRODUCT FEATURES

- Short circuit and overload protection
- Over temperature protection on 0-10V dimming models
- Suitable for dry and damp locations
- Withstanding voltage: I/P – O/P 2kVAC
- Operating temperature range: -40°C to 90°C (measured at Tcase)
- MTBF: 440,000 hours @ 40°C ambient (~70°C case temp)
- Surge voltage rating: L-N 2kV, L/N-GND 4kV
- Inrush Current: <10A Max @120VAC for 120V input models, cold start 25°C
- Inrush Current: <20A Max @230VAC for Universal input models, cold start 25°C

## APPROVALS

- UL 8750 recognized component
- EN61000-3-2
- EMC: Meets FCC47 CFR Part 15 (Class B) consumer limits

FC c UL us

RoHS COMPLIANT

# 36W | Constant Current Case Style P

## GENERAL INFORMATION

| | |
|---|---|
| **LED Driver Type** | Constant Current (Class 2) |
| **Maximum Wattage** | 36 Watts |
| **Input Voltage** | 120 VAC ± 10% Dedicated<br>120 - 277 VAC ± 10% Universal |
| **Input Frequency** | 50/60Hz |
| **Total Harmonic Distortion** | <20% |

## CASE STYLE P: METAL

## MECHANICAL SPECIFICATIONS: CASE STYLE P

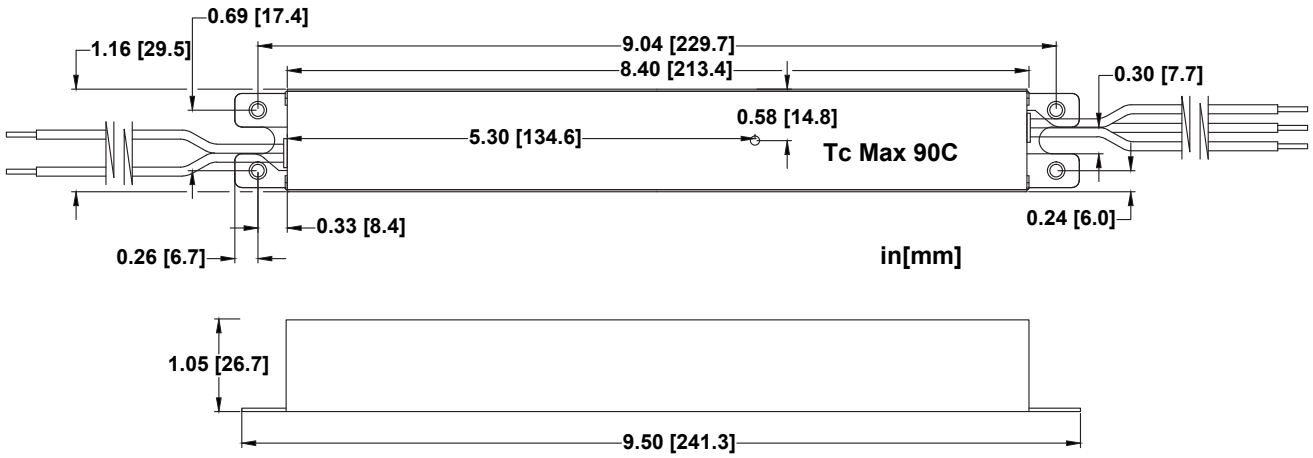


## DIMENSIONS [IN/MM]

| | |
|---|---|
| Length: | 8.40 [213.4] |
| Mounting: | 9.50 [241.3] |
| Width: | 1.16 [29.5] |
| Height: | 1.05 [26.7] |

## WIRING INFORMATION

| | |
|---|---|
| Input: | 12”, Black (L), White (N) #18AWG |
| Output: | 12”, Red (+), Blue (-) #18AWG |
| Dimming: | 12”, Purple (+), Grey (-) # 18AWG |

## PACKAGING INFORMATION

| | |
|---|---|
| Weight: | 13oz |
| Quantity: | 20pc/carton |

## WARRANTY

- 5 year limited warranty

## RELATED PRODUCT

- Case Style G: 6.4” x 1.9” x 1.1”

# 36W | Constant Current Case Style P

## GENERAL INFORMATION

| | |
|---|---|
| **LED Driver Type** | Constant Current (Class 2) |
| **Maximum Wattage** | 36 Watts |
| **Input Voltage** | 120 VAC ± 10% Dedicated<br>120 - 277 VAC ± 10% Universal |
| **Input Frequency** | 50/60Hz |
| **Total Harmonic Distortion** | <20% |

## CASE STYLE P: METAL

## PERFORMANCE CURVES

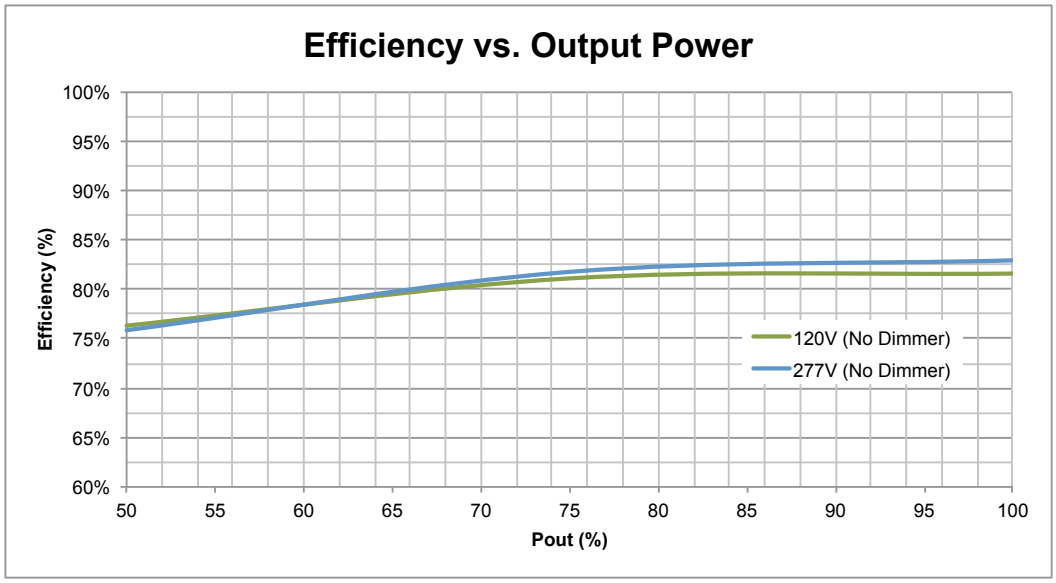


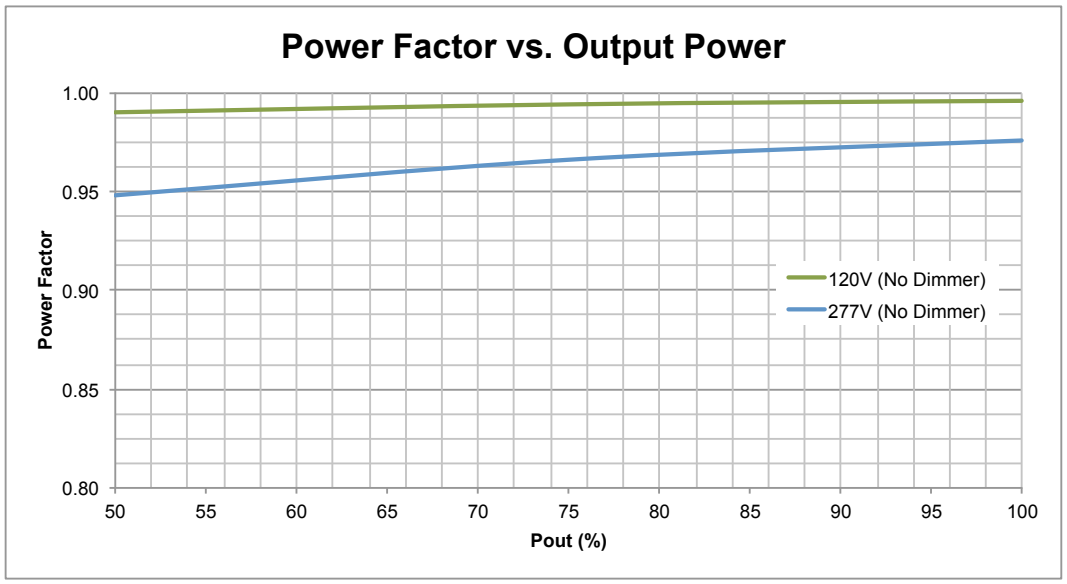


Efficiency and PF measured at 25°C.
Measurements made on model LC36-1000Z-UNV-P.

# 36W | Constant Current Case Style P

## GENERAL INFORMATION

| | |
|---|---|
| **LED Driver Type** | Constant Current (Class 2) |
| **Maximum Wattage** | 36 Watts |
| **Input Voltage** | 120 VAC ± 10% Dedicated<br>120 - 277 VAC ± 10% Universal |
| **Input Frequency** | 50/60Hz |
| **Total Harmonic Distortion** | <20% |

## CASE STYLE P: METAL

## PERFORMANCE CURVES

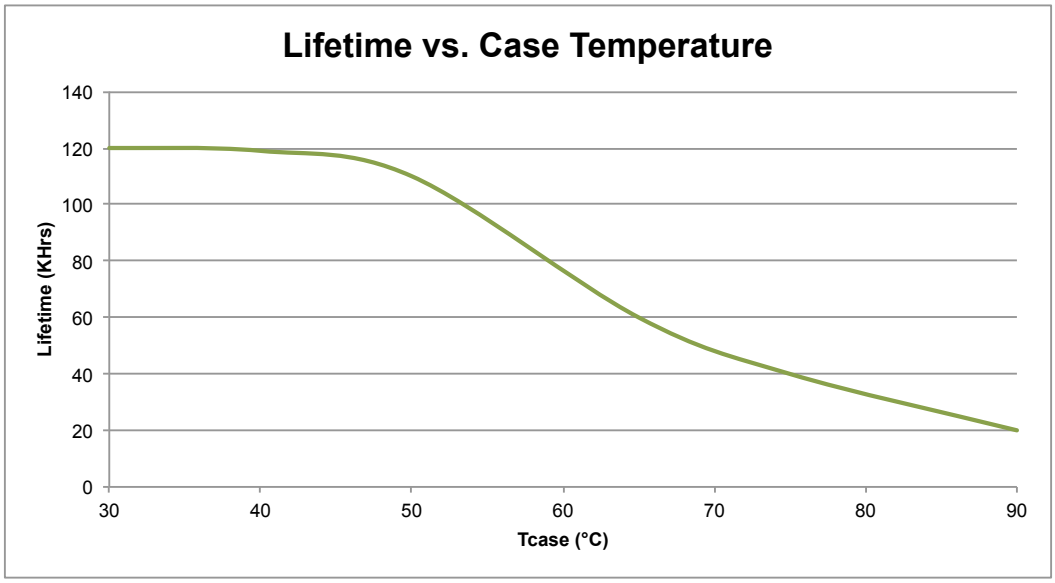


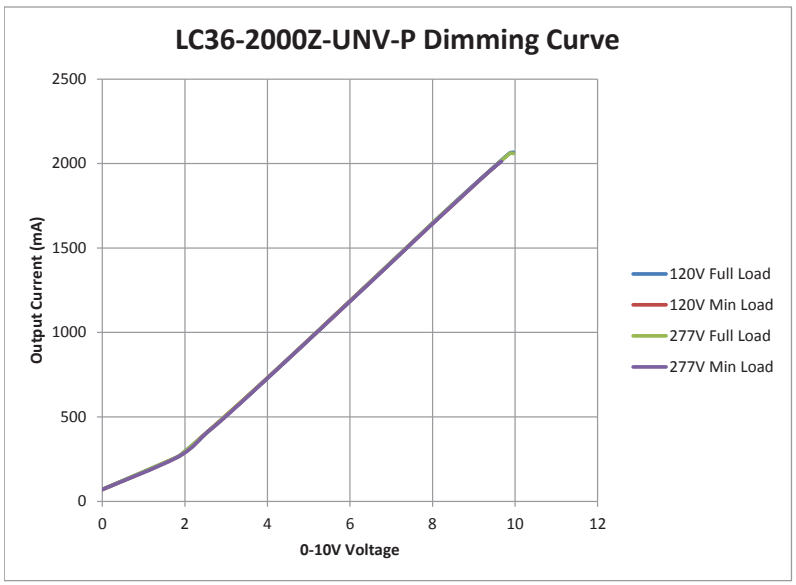

# 40W | Constant Current Case Style G

## GENERAL INFORMATION

| | |
|---|---|
| **LED Driver Type** | Constant Current (Class 2) |
| **Maximum Wattage** | 40 Watts |
| **Input Voltage** | 120 VAC ± 10% Dedicated |
| **Input Frequency** | 50/60Hz |
| **Total Harmonic Distortion** | <20% |

## CASE STYLE G: METAL

## ELECTRICAL SPECIFICATIONS

| Watts | Rated Current | Output Voltage | Dimming Type | Input Voltage | Input Power | Input Current | Power Factor | Efficiency | Hatch Part Number |
|---|---|---|---|---|---|---|---|---|---|
| **Dimming Models** | | | | | | | | | |
| 40W | 1050mA | 12 - 38 VDC | Phase Dimming | 120 VAC | 49W | 0.42A | >0.90 | 85% | LC40-1050P-120-G |
| | 1200mA | 11 - 33 VDC | Phase Dimming | 120 VAC | 49W | 0.42A | >0.90 | 84% | LC40-1200P-120-G |
| | 1400mA | 10 - 28 VDC | Phase Dimming | 120 VAC | 49W | 0.42A | >0.90 | 84% | LC40-1400P-120-G |
| | 2100mA | 10 - 19 VDC | Phase Dimming | 120 VAC | 49W | 0.42A | >0.90 | 84% | LC40-2100P-120-G |

*Class 2 US ONLY

## PRODUCT FEATURES

- Short circuit and overload protection
- Suitable for dry and damp locations
- Withstanding voltage: I/P – O/P 2kVAC
- Operating temperature range: -40°C to 90°C (measured at Tcase)
- Surge voltage rating: L-N 2kV, L/N-GND 4kV
- MTBF: 384,000 hours at 40°C ambient (~70°C Case temp)
- Inrush Current: <10A Max @120VAC, cold start 25°C

## APPROVALS

- UL 8750 recognized component
- EN61347-1, EN61347-2-13
- EMC: Meets FCC47 CFR Part 15 (Class B) consumer limits

## MECHANICAL SPECIFICATIONS: CASE STYLE G

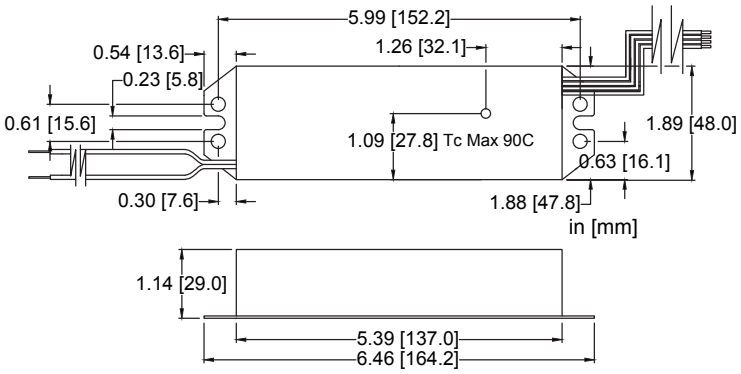


## DIMENSIONS [IN/MM]

| | |
|---|---|
| Length: | 5.39 [137.0] |
| Mounting: | 6.46 [164.2] |
| Width: | 1.89 [48.0] |
| Height: | 1.14 [29.0] |

## WIRING INFORMATION

| | |
|---|---|
| Input: | 12”, Black (L), White (N) #18AWG |
| Output: | 12”, Red (+), Blue (-) #22AWG |

## PACKAGING INFORMATION

| | |
|---|---|
| Weight: | 12.7oz |
| Quantity: | 40pc/carton |

## WARRANTY

- 5 year limited warranty

## RELATED PRODUCT

- Case Style W: 3.75” x 2.70” x 1.26”

# 40W | Constant Current Case Style W

## GENERAL INFORMATION

| | |
|---|---|
| **LED Driver Type** | Constant Current (Class 2) |
| **Maximum Wattage** | 40 Watts |
| **Input Voltage** | 120 - 277 VAC ± 10% Universal |
| **Input Frequency** | 50/60Hz |
| **Total Harmonic Distortion** | <20% |

## CASE STYLE W: POLYCARBONATE

## ELECTRICAL SPECIFICATIONS

| Watts | Rated Current | Output Voltage | Dimming Type | Input Voltage | Input Power | Input Current 120/277V | Power Factor | Efficiency | Hatch Part Number |
|---|---|---|---|---|---|---|---|---|---|
| **Dimming Models** | | | | | | | | | |
| 40W | **350mA | 38 - 114 VDC | 0-10V Dimming | 120 - 277 VAC | 46W | 0.41/0.19A | >0.90 | 88% | **LC40-0350Z-UNV-W |
| | *700mA | 19 - 57 VDC | 0-10V Dimming | 120 - 277 VAC | 46W | 0.41/0.19A | >0.90 | 87% | *LC40-0700Z-UNV-W |
| | 1050mA | 12 - 36 VDC | 0-10V Dimming | 120 - 277 VAC | 46W | 0.41/0.19A | >0.90 | 87% | LC40-1050Z-UNV-W |

** Non-Class 2 *Class 2 US ONLY

## PRODUCT FEATURES

- Short circuit and overload protection
- Over temperature protection
- Suitable for dry and damp locations
- Withstanding voltage: I/P – O/P 2kVAC
- Operating temperature range: -40°C to 90°C (measured at Tcase)
- MTBF: 302,000 hours @ 40°C ambient (~70°C case temp)
- Surge voltage rating: L-N 4kV
- Inrush Current: <10A Max @230VAC, cold start 25°C
- Available in reverse phase dimming – Contact your sales representative for more information

## APPROVALS

- UL 8750 recognized component
- EN61000-3-2
- EMC: Meets FCC47 CFR Part 15 (Class B) consumer limits
- IP66

## MECHANICAL SPECIFICATIONS: CASE STYLE W

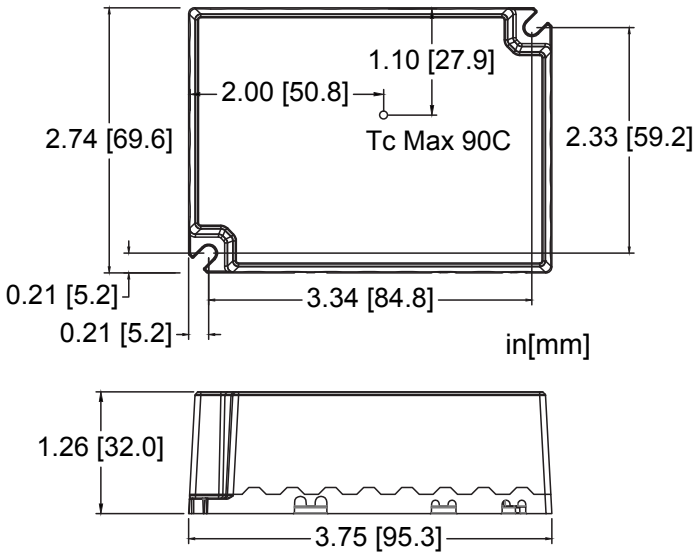


## DIMENSIONS [IN/MM]

| | |
|---|---|
| Length: | 3.34 [84.8] |
| Mounting: | 3.75 [95.3] |
| Width: | 2.74 [69.6] |
| Height: | 1.26 [32.0] |

## WIRING INFORMATION

| | |
|---|---|
| Input: | 12”, Black (L), White (N) #18AWG |
| Output: | 12”, Red (+), Blue (-) #18AWG |
| Dimming: | 12”, Purple (+), Grey (-) # 18AWG |

## PACKAGING INFORMATION

| | |
|---|---|
| Weight: | 12.25oz |
| Quantity: | 40pc/carton |

## WARRANTY

- 5 year limited warranty

## RELATED PRODUCT

- Case Style G: 6.48” x 1.86” x 1.11”

# 40W | Constant Current Case Style W

## GENERAL INFORMATION

| | |
|---|---|
| **LED Driver Type** | Constant Current (Class 2) |
| **Maximum Wattage** | 40 Watts |
| **Input Voltage** | 120 - 277 VAC ± 10% Universal |
| **Input Frequency** | 50/60Hz |
| **Total Harmonic Distortion** | <20% |

## CASE STYLE W: POLYCARBONATE

## PERFORMANCE CURVES

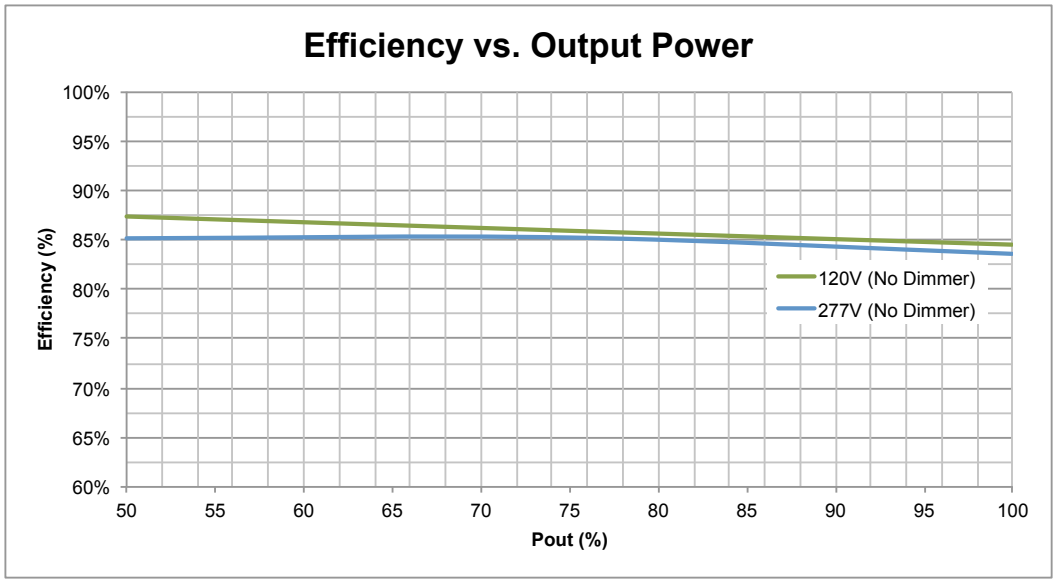


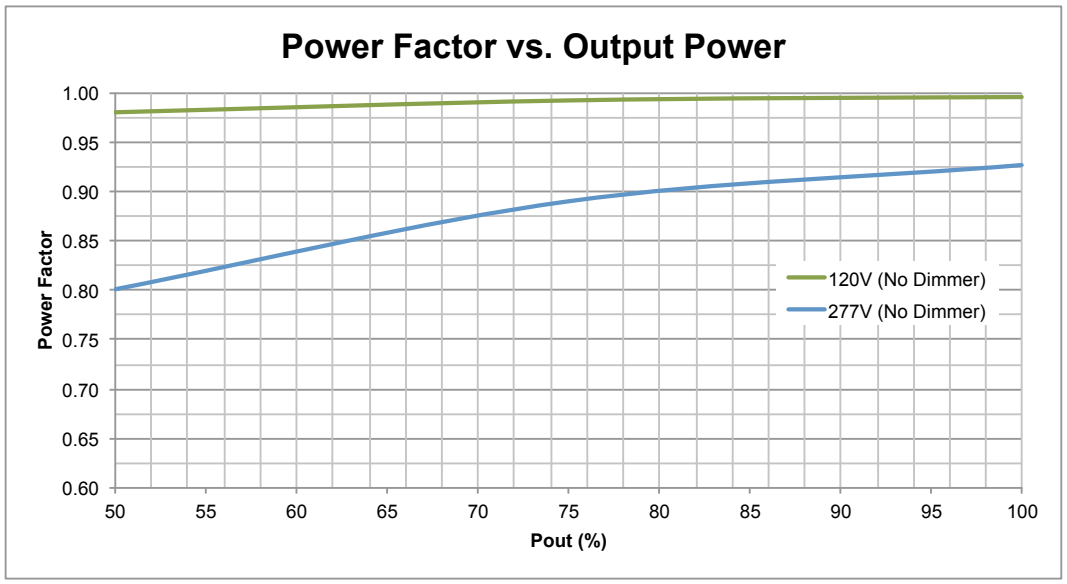


Efficiency and PF measured at 25°C.
Measurements made on model LC40-0700Z-UNV-W.

# 40W | Constant Current Case Style W

## GENERAL INFORMATION

| | |
|---|---|
| **LED Driver Type** | Constant Current (Class 2) |
| **Maximum Wattage** | 40 Watts |
| **Input Voltage** | 120 - 277 VAC ± 10% Universal |
| **Input Frequency** | 50/60Hz |
| **Total Harmonic Distortion** | <20% |

## CASE STYLE W: POLYCARBONATE

## PERFORMANCE CURVES

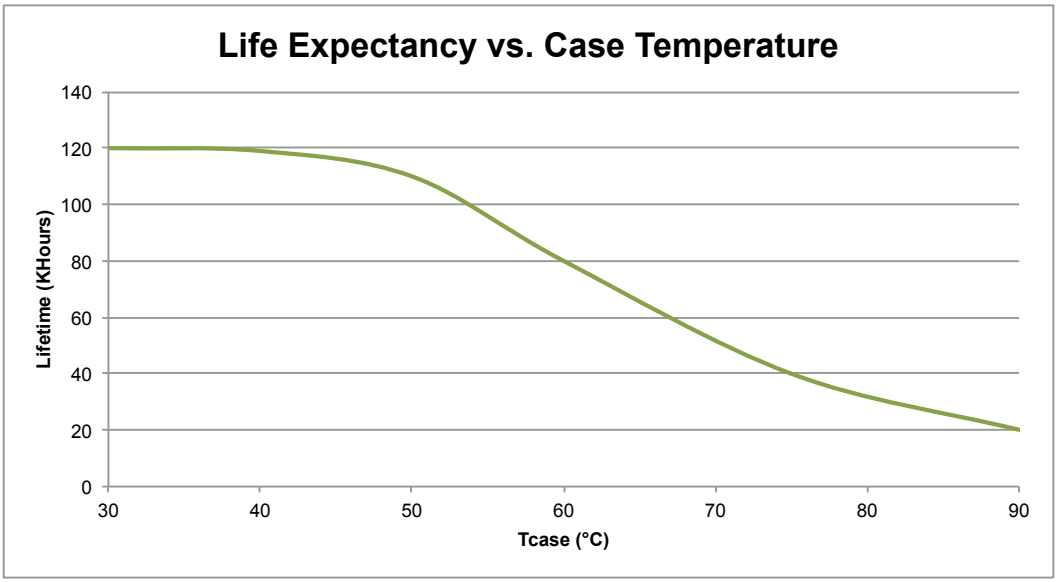


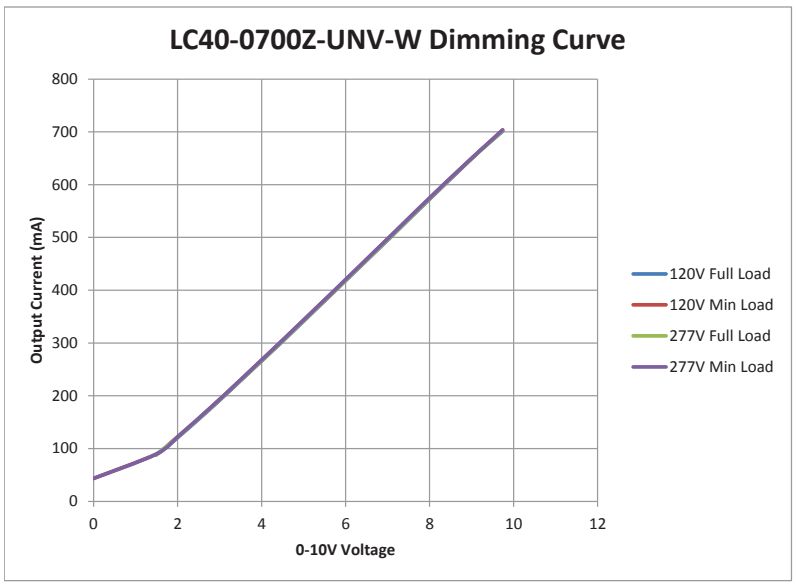

# 50W Constant Current Case Style F

## GENERAL INFORMATION

| | |
|---|---|
| **LED Driver Type** | Constant Current (Class 2) |
| **Maximum Wattage** | 50 Watts |
| **Input Voltage** | 120 - 277 VAC ± 10% Universal<br>347 VAC ± 10% Dedicated |
| **Input Frequency** | 50/60Hz |
| **Total Harmonic Distortion** | <20% |

## CASE STYLE F: METAL

## ELECTRICAL SPECIFICATIONS

| Watts | Rated Current | Output Voltage | Dimming Type | Input Voltage | Input Power | Input Current | Power Factor | Efficiency | Hatch Part Number |
|---|---|---|---|---|---|---|---|---|---|
| **Dimming Models** | | | | | | | | | |
| 50W | **500mA | 48-95 VDC | 0-10V Dimming | 347 VAC | 56W | 0.17A | >0.94 | 89% | **LC50-0500Z-347-F |
| | **700mA | 36-71 VDC | 0-10V Dimming | 347 VAC | 56W | 0.17A | >0.94 | 90% | **LC50-0700Z-347-F |
| | *1050mA | 24-48 VDC | 0-10V Dimming | 347 VAC | 56W | 0.17A | >0.92 | 89% | *LC50-1050Z-347-F |
| | *1050mA | 24-48 VDC | 0-10V Dimming | 120 - 277 VAC | 60W | 0.55/0.26A | >0.90 | 83% | *LC50-1050Z-UNV-F |
| | 1200mA | 24-41VDC | 0-10V Dimming | 120 - 277 VAC | 60W | 0.55/0.26A | >0.90 | 83% | LC50-1200Z-UNV-F |

** Non-Class 2 *Class 2 US ONLY

## PRODUCT FEATURES

- Short circuit and overload protection
- Over temperature protection
- Suitable for dry and damp locations
- Withstanding voltage: I/P – O/P 2kVAC
- Operating temperature range: -40°C to 90°C (measured at Tcase)
- MTBF: 299,000 hours @ 40°C ambient (~70°C case temp)
- Surge voltage rating: L-N 4kV, L/N-GND 6kV
- Inrush Current: <10A Max @347VAC for 347V input models, cold start 25°C
- Inrush Current: <30A Max @230VAC for Universal input models, cold start 25°C

## APPROVALS

- UL 8750 recognized component
- EN61000-3-2
- EMC: Meets FCC47 CFR Part 15 (Class B) consumer limits

## MECHANICAL SPECIFICATIONS: CASE STYLE F

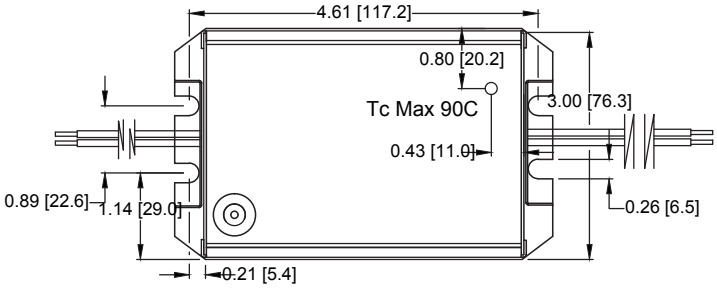


in[mm]

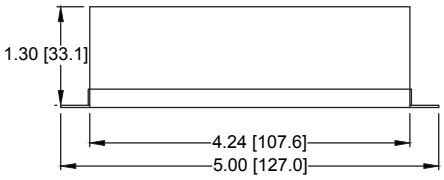


## DIMENSIONS [IN/MM]

| | |
|---|---|
| Length: | 4.61 [117.2] |
| Mounting: | 5.00 [127.0] |
| Width: | 3.00 [76.3] |
| Height: | 1.30 [33.1] |

## WIRING INFORMATION

| | |
|---|---|
| Input: | 12”, Black (L), White (N) #18AWG |
| Output: | 12”, Red (+), Blue (-) #22AWG |
| Dimming: | 12”, Purple (+), Grey (-) # 22AWG |

## PACKAGING INFORMATION

| | |
|---|---|
| Weight: | 23oz |
| Quantity: | 30pc/carton |

## WARRANTY

- 5 year limited warranty

## RELATED PRODUCT

- Case Style I: 9.50” x 1.71” x 1.15”
- Case Style T: 5.42” x 1.87” x 1.27”

# 50W Constant Current Case Style F

## GENERAL INFORMATION

| | |
|---|---|
| **LED Driver Type** | Constant Current (Class 2) |
| **Maximum Wattage** | 50 Watts |
| **Input Voltage** | 120 - 277 VAC ± 10% Universal<br>347 VAC ± 10% Dedicated |
| **Input Frequency** | 50/60Hz |
| **Total Harmonic Distortion** | <20% |

## CASE STYLE F: METAL

## PERFORMANCE CURVES

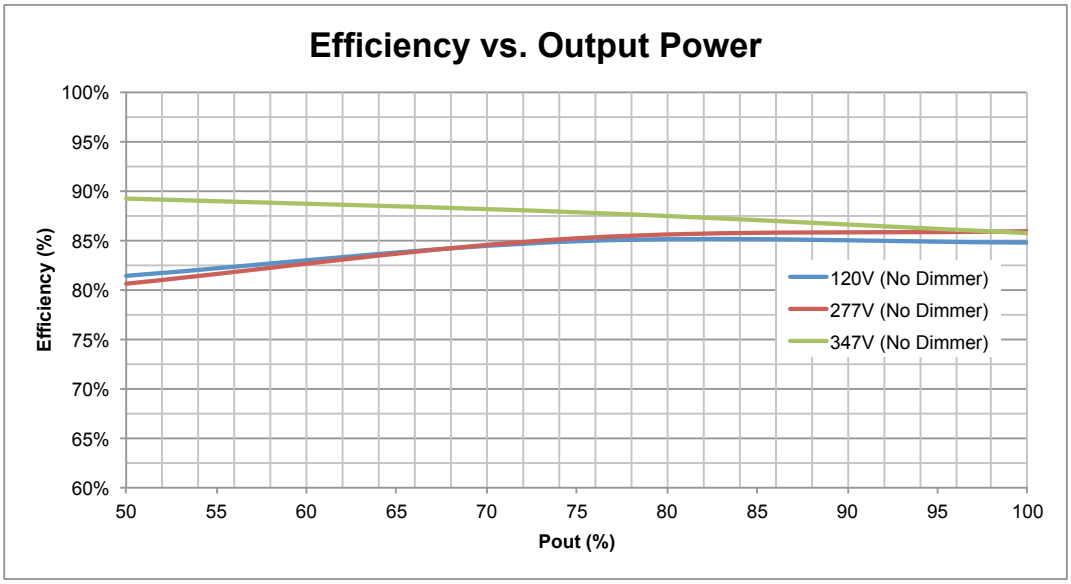


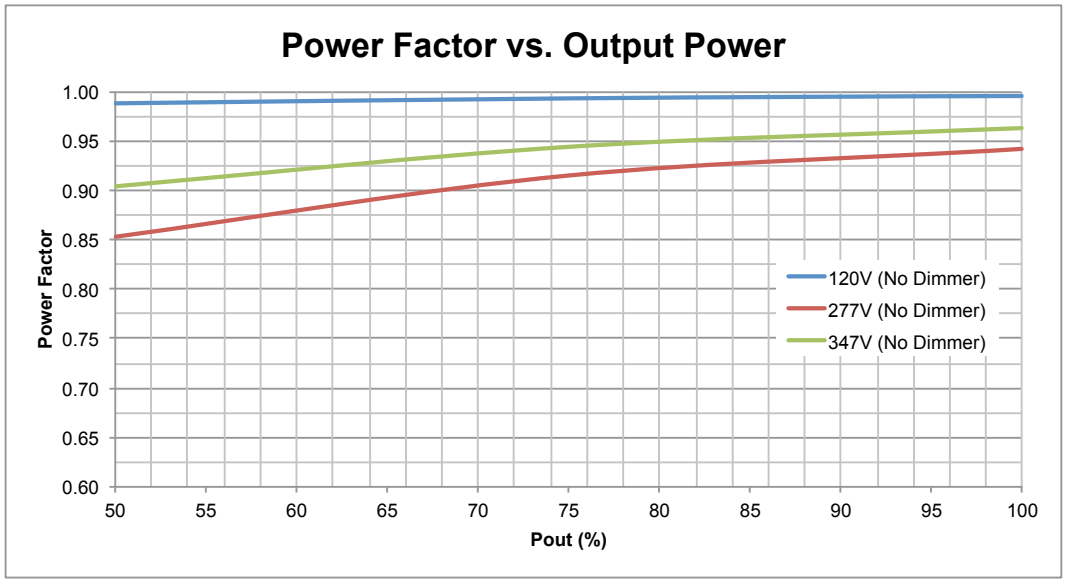


Efficiency, PF and THD measured at 25°C.
Measurements made on model LC50-0500Z-347-F.

# 50W Constant Current Case Style F

## GENERAL INFORMATION

| | |
|---|---|
| **LED Driver Type** | Constant Current (Class 2) |
| **Maximum Wattage** | 50 Watts |
| **Input Voltage** | 120 - 277 VAC ± 10% Universal<br>347 VAC ± 10% Dedicated |
| **Input Frequency** | 50/60Hz |
| **Total Harmonic Distortion** | <20% |

## CASE STYLE F: METAL

## PERFORMANCE CURVES

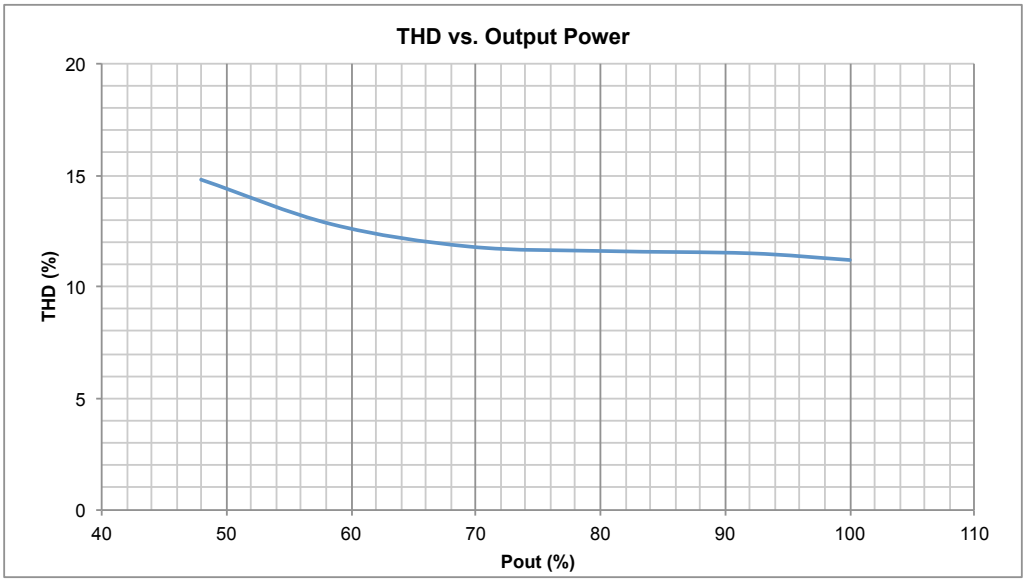


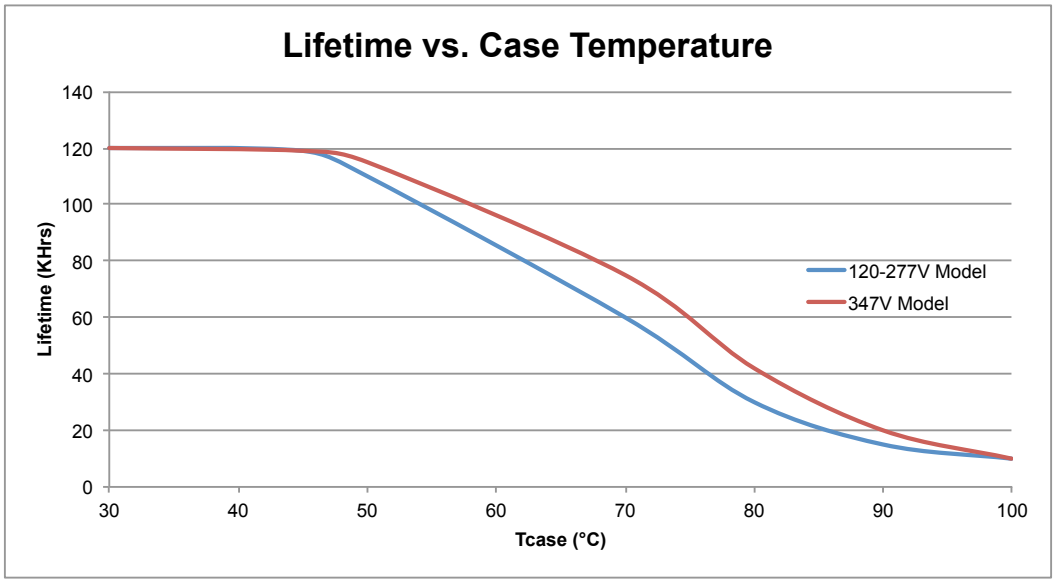


Efficiency, PF and THD measured at 25°C.
Measurements made on model LC50-0500Z-347-F.

# 50W | Constant Current Case Style I

## GENERAL INFORMATION

| | |
|---|---|
| **LED Driver Type** | Constant Current (Class 2) |
| **Maximum Wattage** | 50 Watts |
| **Input Voltage** | 120 - 277 VAC ± 10% Universal |
| **Input Frequency** | 50/60Hz |
| **Total Harmonic Distortion** | <20% |

## CASE STYLE I: METAL

## ELECTRICAL SPECIFICATIONS

| Watts | Output Channels | Rated Current | Output Voltage | Dimming Type | Input Voltage | Input Power | Input Current | Power Factor | Efficiency | Hatch Part Number |
|---|---|---|---|---|---|---|---|---|---|---|
| **Dimming Models** | | | | | | | | | | |
| 50W | 4 X 12W | 350mA | 18 - 36 VDC | 0-10V Dimming | 120 - 277 VAC | 62W | 0.56/0.26A | >0.90 | 82% | LC50Q-0350Z-UNV-I |
| | 4 X 12W | 445mA | 14 - 28 VDC | 0-10V Dimming | 120 - 277 VAC | 63W | 0.56/0.26A | >0.90 | 80% | LC50Q-0445Z-UNV-I |
| | 2 X 25W | 700mA | 18 - 36 VDC | 0-10V Dimming | 120 - 277 VAC | 63W | 0.56/0.26A | >0.90 | 80% | LC50D-0700Z-UNV-I |

## PRODUCT FEATURES

- Short circuit and overload protection
- Over temperature protection on 2 output model
- Suitable for dry and damp locations
- Withstanding voltage: I/P – O/P 2kVAC
- Operating temperature range: -40°C to 70°C (measured at Tcase)
- MTBF: 275,000 hours @ 40°C ambient (~70°C case temp)
- Surge voltage rating: L-N 4kV, L/N-GND 6kV
- Inrush Current: <20A Max @230VAC, cold start 25°C

## APPROVALS

- UL 8750 recognized component
- EN61000-3-2
- EMC: Meets FCC47 CFR Part 15 (Class A) Non-consumer limits

## MECHANICAL SPECIFICATIONS: CASE STYLE I

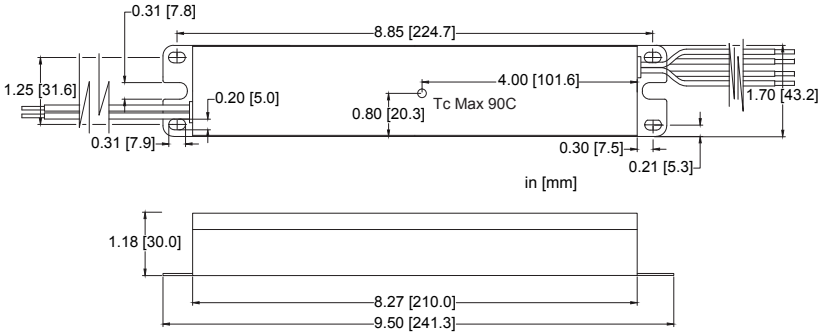


## DIMENSIONS [IN/MM]

| | |
|---|---|
| Length: | 8.85 [224.7] |
| Mounting: | 9.50 [241.3] |
| Width: | 1.70 [43.2] |
| Height: | 1.18 [30.0] |

## WIRING INFORMATION

| | |
|---|---|
| Input: | 12”, Black (L), White (N) #18AWG |
| Output: | 12”, Red (+), Blue (-) #22AWG |
| Dimming: | 12”, Purple (+), Grey (-) # 22AWG |

## PACKAGING INFORMATION

| | |
|---|---|
| Weight: | 21.2 oz |
| Quantity: | 30pc/carton |

## WARRANTY

- 5 year limited warranty

## RELATED PRODUCT

- Case Style T: 5.42” x 1.87” x 1.27”
- Case Style F: 5.00” x 3.01” x 1.34”

# 50W | Constant Current Case Style I

## GENERAL INFORMATION

| | |
|---|---|
| **LED Driver Type** | Constant Current (Class 2) |
| **Maximum Wattage** | 50 Watts |
| **Input Voltage** | 120 - 277 VAC ± 10% Universal |
| **Input Frequency** | 50/60Hz |
| **Total Harmonic Distortion** | <20% |

## CASE STYLE I: METAL

## PERFORMANCE CURVES

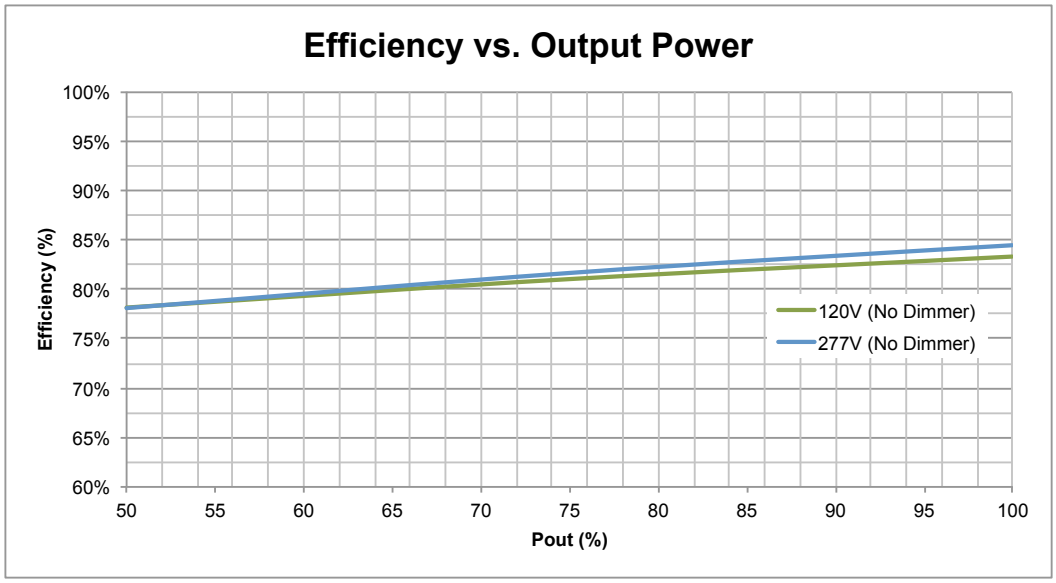


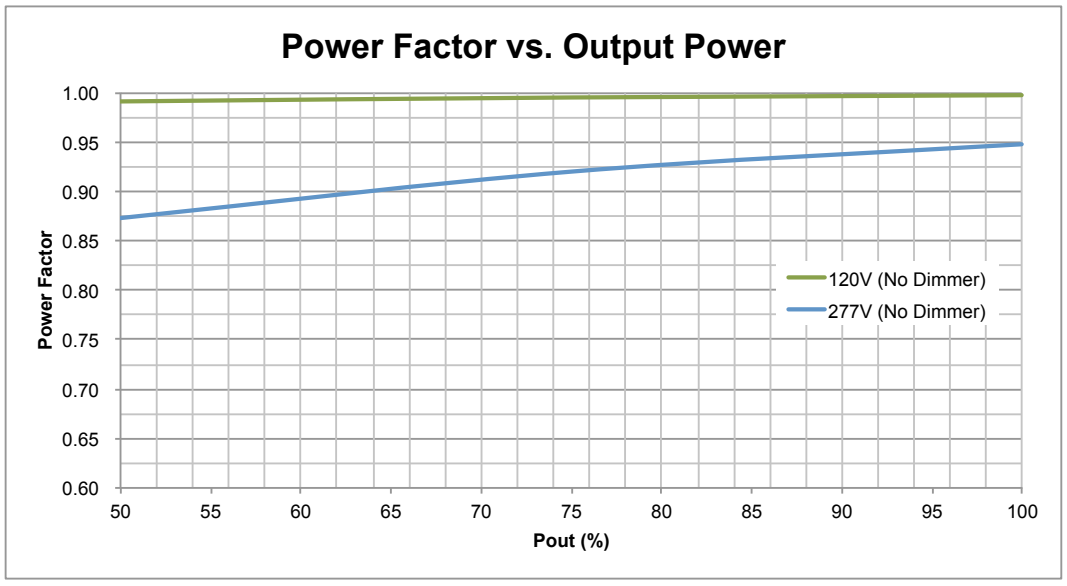


Efficiency and PF measured at 25°C.
Measurements made on model LC50D-0700Z-UNV-I.

# 50W | Constant Current Case Style I

## GENERAL INFORMATION

| | |
|---|---|
| **LED Driver Type** | Constant Current (Class 2) |
| **Maximum Wattage** | 50 Watts |
| **Input Voltage** | 120 - 277 VAC ± 10% Universal |
| **Input Frequency** | 50/60Hz |
| **Total Harmonic Distortion** | <20% |

## CASE STYLE I: METAL

## PERFORMANCE CURVES

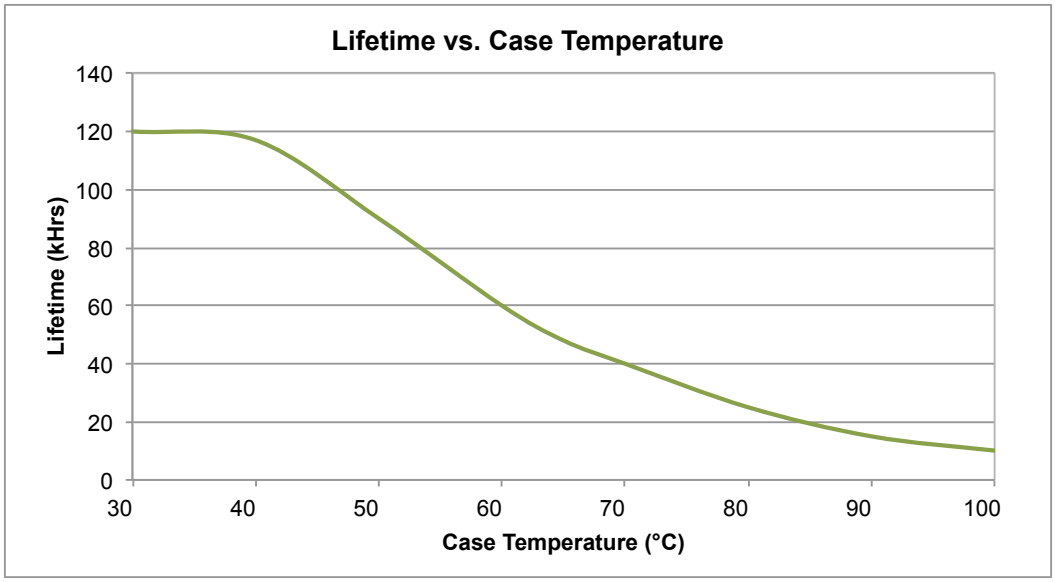


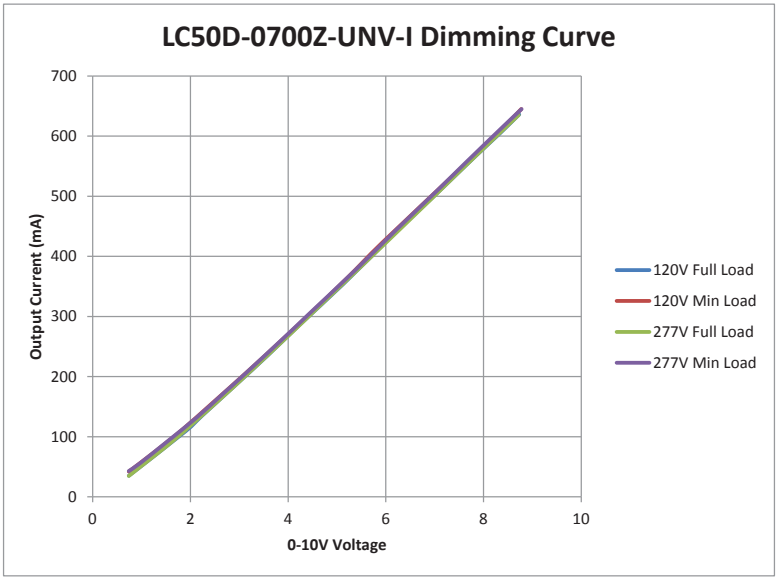

# 50W | Constant Current Case Style T

## GENERAL INFORMATION

| | |
|---|---|
| **LED Driver Type** | Constant Current (Class 2) |
| **Maximum Wattage** | 50 Watts |
| **Input Voltage** | 120 - 277 VAC ± 10% Universal |
| **Input Frequency** | 50/60Hz |
| **Total Harmonic Distortion** | <20% |

## CASE STYLE T: POLYCARBONATE

## ELECTRICAL SPECIFICATIONS

| Watts | Rated Current | Output Voltage | Dimming Type | Input Voltage | Input Power | Input Current | Power Factor | Efficiency | Hatch Part Number |
|---|---|---|---|---|---|---|---|---|---|
| **Dimming Models** | | | | | | | | | |
| 50W | **530mA | 47-97 VDC | 0-10V Dimming | 120 - 277 VAC | 57W | 0.50/0.23A | >0.90 | 89% | LC50-0530Z-UNV-T |
| | **700mA | 36-72 VDC | 0-10V Dimming | 120 - 277 VAC | 57W | 0.50/0.23A | >0.90 | 88% | LC50-0700Z-UNV-T |
| | **830mA | 30-60 VDC | 0-10V Dimming | 120 - 277 VAC | 57W | 0.50/0.23A | >0.90 | 88% | LC50-0830Z-UNV-T |
| | *1050mA | 24-48 VDC | 0-10V Dimming | 120 - 277 VAC | 58W | 0.50/0.23A | >0.90 | 87% | LC50-1050Z-UNV-T |
| | 1400mA | 18-36 VDC | 0-10V Dimming | 120 - 277 VAC | 57W | 0.50/0.23A | >0.90 | 86% | LC50-1400Z-UNV-T |
| | 1750mA | 14-28 VDC | 0-10V Dimming | 120 - 277 VAC | 59W | 0.50/0.23A | >0.90 | 85% | LC50-1750Z-UNV-T |
| | 2100mA | 12-24 VDC | 0-10V Dimming | 120 -277 VAC | 60W | 0.50/0.23A | >0.90 | 84% | LC50-2100Z-UNV-T |
| **Dual-Dimming Models** | | | | | | | | | |
| 50W | *1050mA | 24-48 VDC | Dual Dimming | 120 - 277 VAC | 60W | 0.52/0.24A | >0.90 | 85% | LC50-1050D-UNV-T |
| | 1200mA | 21-42 VDC | Dual Dimming | 120 - 277 VAC | 60W | 0.52/0.24A | >0.90 | 85% | LC50-1200D-UNV-T |
| | 1400mA | 18-36 VDC | Dual Dimming | 120 - 277 VAC | 60W | 0.52/0.24A | >0.90 | 85% | LC50-1400D-UNV-T |
| | 2100mA | 12-24 VDC | Dual Dimming | 120 - 277 VAC | 60W | 0.52/0.24A | >0.90 | 85% | LC50-2100D-UNV-T |
| **Non-Dimming Models** | | | | | | | | | |
| 50W | **700mA | 36-72 VDC | Non-Dimming | 120 - 277 VAC | 57W | 0.50/0.23A | >0.90 | 87% | LC50-0700N-UNV-T |
| | *1050mA | 24-48 VDC | Non-Dimming | 120 - 277 VAC | 57W | 0.50/0.23A | >0.90 | 87% | LC50-1050N-UNV-T |
| | 2100mA | 12-24 VDC | Non-Dimming | 120 - 277 VAC | 57W | 0.50/0.23A | >0.90 | 87% | LC50-2100N-UNV-T |

**Non-Class 2 *Class 2 US Only

## PRODUCT FEATURES

- Short circuit and overload protection
- Over temperature protection on dual dimming models
- Suitable for dry and damp locations
- Withstanding voltage: I/P – O/P 2kVAC
- Surge Rating: 2kV L-N
- Operating temperature range: -40°C to 90°C (measured at Tcase)
- MTBF: 235,000 hours at 40°C ambient (~70°C Case Temperature)
- Inrush Current: <20A Max @230VAC, cold start 25°C
- 0-10V dimming & non-dimming models are a two stage design
- Dual dimming: 0-10V (10%) and reverse phase only

## APPROVALS

- UL 8750 recognized component
- EN61000-3-2
- EMC: Meets FCC47 CFR Part 15 (Class B) consumer limits @ 120V
- EMC: Meets FCC47 CFR Part 15 (Class A) non-consumer limits @ 277V
- IP 66

TYPE HL

# 50W | Constant Current Case Style T

## GENERAL INFORMATION

| | |
|---|---|
| **LED Driver Type** | Constant Current (Class 2) |
| **Maximum Wattage** | 50 Watts |
| **Input Voltage** | 120 - 277 VAC ± 10% Universal |
| **Input Frequency** | 50/60Hz |
| **Total Harmonic Distortion** | <20% |

## CASE STYLE T: POLYCARBONATE

## MECHANICAL SPECIFICATIONS: CASE STYLE T

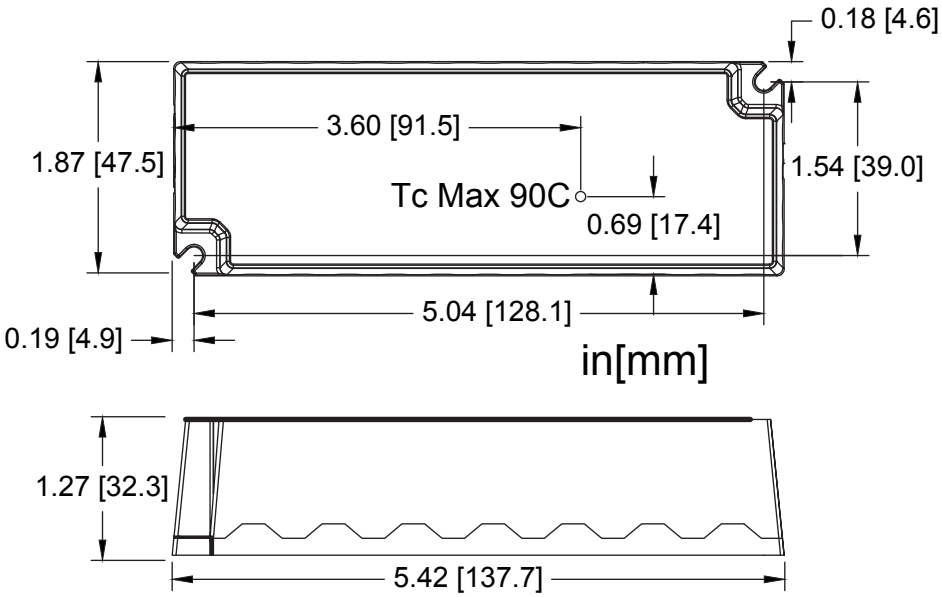


## DIMENSIONS [IN/MM]

| | |
|---|---|
| Length: | 5.04 [128.1] |
| Mounting: | 5.42 [137.7] |
| Width: | 1.87 [47.5] |
| Height: | 1.27 [32.3] |

## WIRING INFORMATION

| | |
|---|---|
| Input: | 12”, Black (L), White (N) #18AWG |
| Output: | 12”, Red (+), Blue (-) #18AWG |
| Dimming: | 12”, Purple (+), Grey (-) # 18AWG |

## PACKAGING INFORMATION

| | |
|---|---|
| Weight: | 11 oz |
| Quantity: | 40pc/carton |

## WARRANTY

- 5 year limited warranty

## RELATED PRODUCT

- Case Style I: 9.50” x 1.71” x 1.15”
- Case Style F: 5.00” x 3.01” x 1.34”

# 50W | Constant Current Case Style T

## GENERAL INFORMATION

| | |
|---|---|
| **LED Driver Type** | Constant Current (Class 2) |
| **Maximum Wattage** | 50 Watts |
| **Input Voltage** | 120 - 277 VAC ± 10% Universal |
| **Input Frequency** | 50/60Hz |
| **Total Harmonic Distortion** | <20% |

## CASE STYLE T: POLYCARBONATE

## PERFORMANCE CURVES

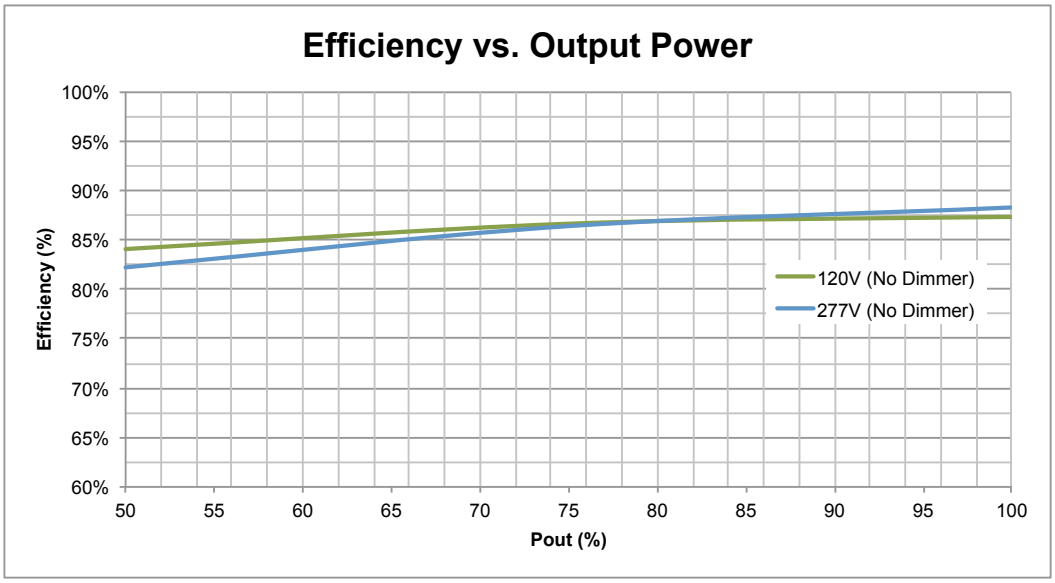


Measurements made on model LC50-1050Z-UNV-T.

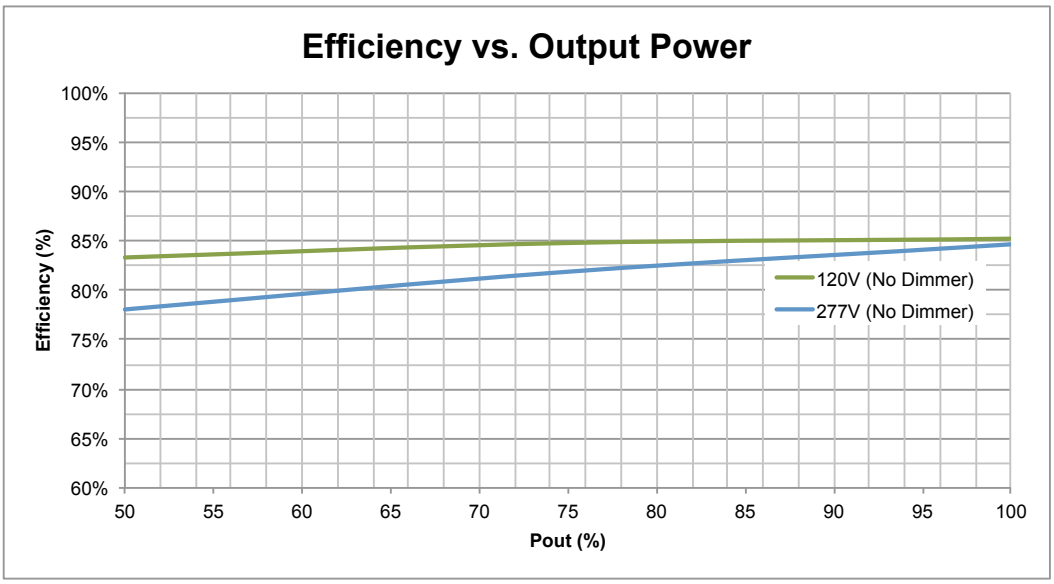


Measurements made on model LC50-1200D-UNV-T.

Efficiency and PF measured at 25°C.

# 50W | Constant Current Case Style T

## GENERAL INFORMATION

| | |
|---|---|
| **LED Driver Type** | Constant Current (Class 2) |
| **Maximum Wattage** | 50 Watts |
| **Input Voltage** | 120 - 277 VAC ± 10% Universal |
| **Input Frequency** | 50/60Hz |
| **Total Harmonic Distortion** | <20% |

## CASE STYLE T: POLYCARBONATE

## PERFORMANCE CURVES

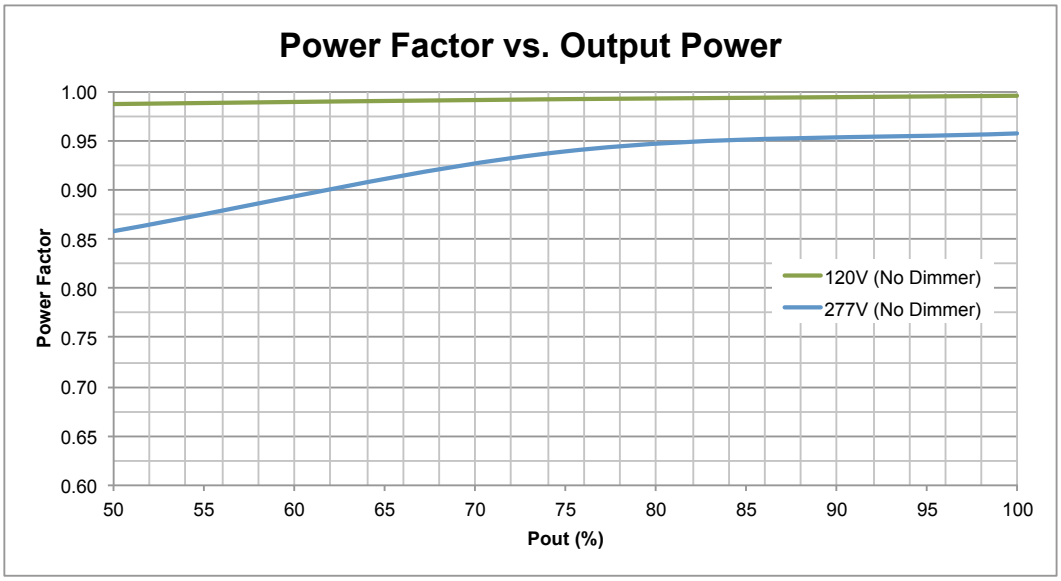


Measurements made on model LC50-1050Z-UNV-T.

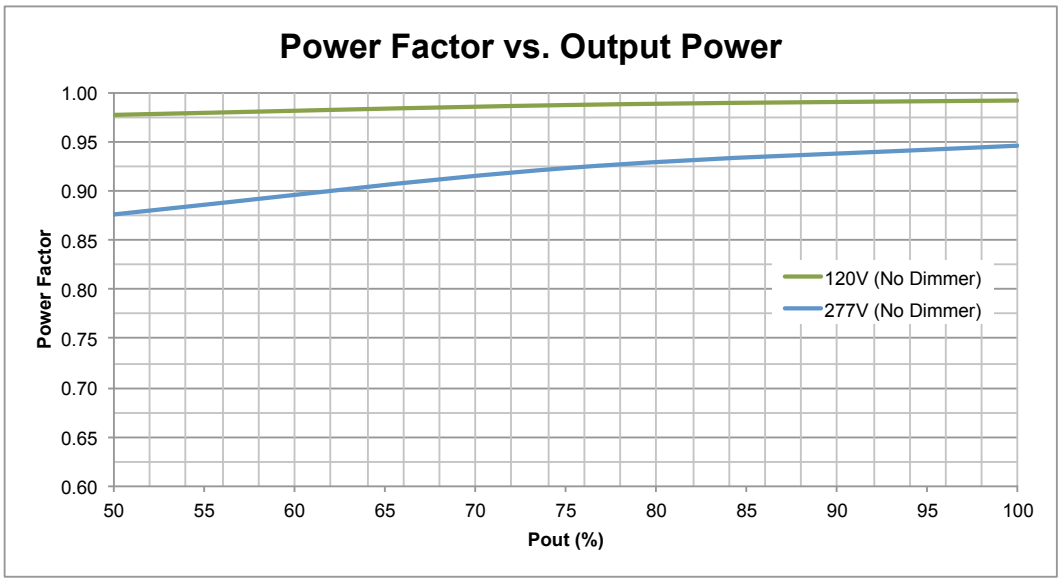


Measurements made on model LC50-1200D-UNV-T.

Efficiency and PF measured at 25°C.

HATCH LED DRIVERS

# 50W | Constant Current Case Style T

## GENERAL INFORMATION

| | |
|---|---|
| **LED Driver Type** | Constant Current (Class 2) |
| **Maximum Wattage** | 50 Watts |
| **Input Voltage** | 120 - 277 VAC ± 10% Universal |
| **Input Frequency** | 50/60Hz |
| **Total Harmonic Distortion** | <20% |

## CASE STYLE T: POLYCARBONATE

## PERFORMANCE CURVES

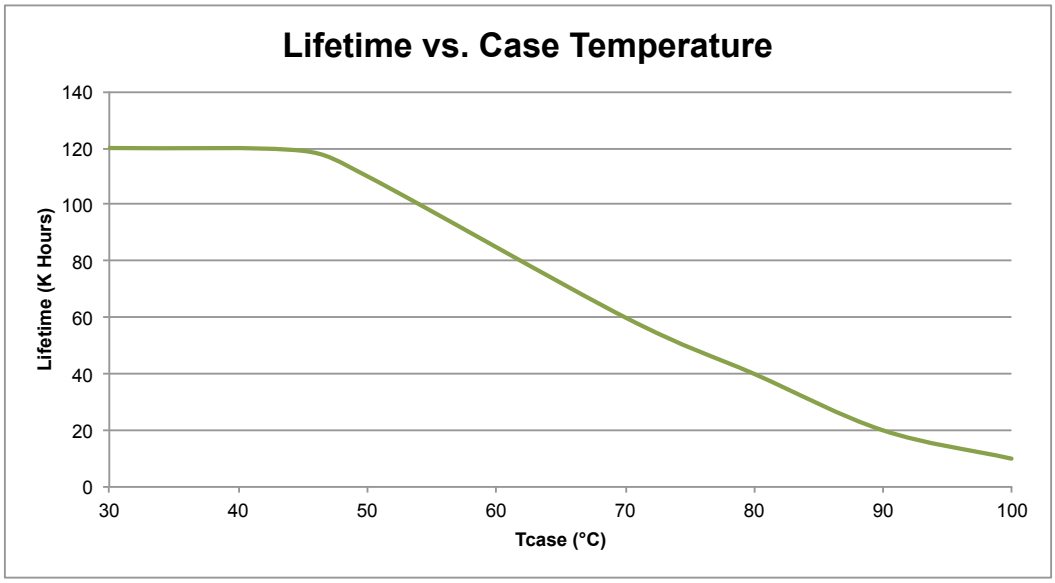


Measurements made on model LC50-1050Z-UNV-T.

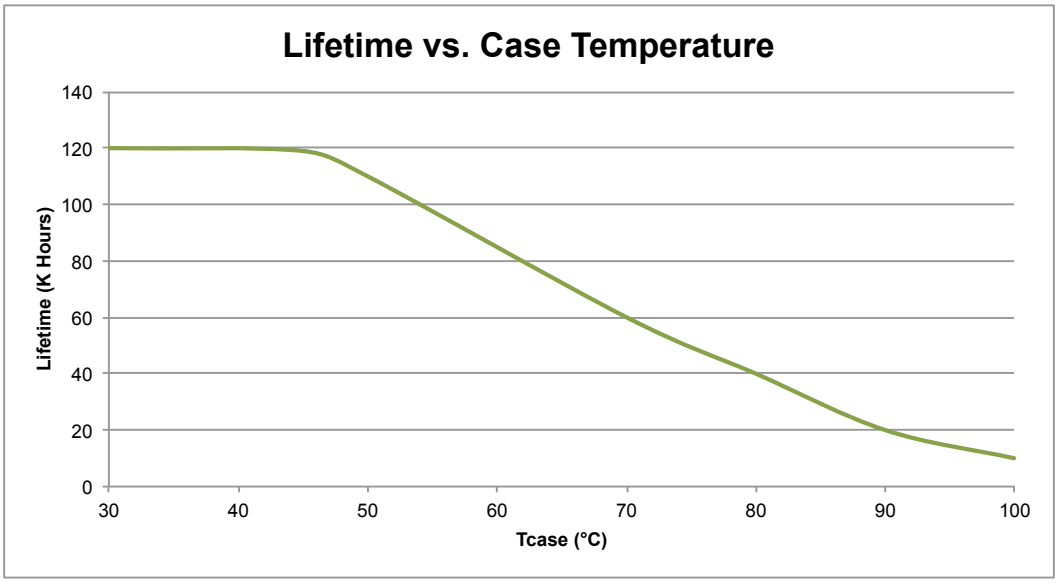


Measurements made on model LC50-1200D-UNV-T.

# 50W | Constant Current Case Style T

## GENERAL INFORMATION

| | |
|---|---|
| **LED Driver Type** | Constant Current (Class 2) |
| **Maximum Wattage** | 50 Watts |
| **Input Voltage** | 120 - 277 VAC ± 10% Universal |
| **Input Frequency** | 50/60Hz |
| **Total Harmonic Distortion** | <20% |

## CASE STYLE T: POLYCARBONATE

## PERFORMANCE CURVES

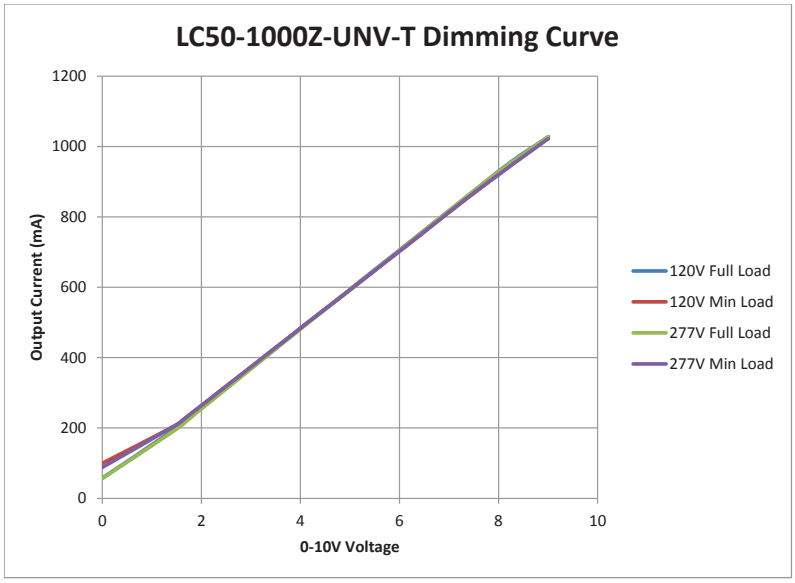


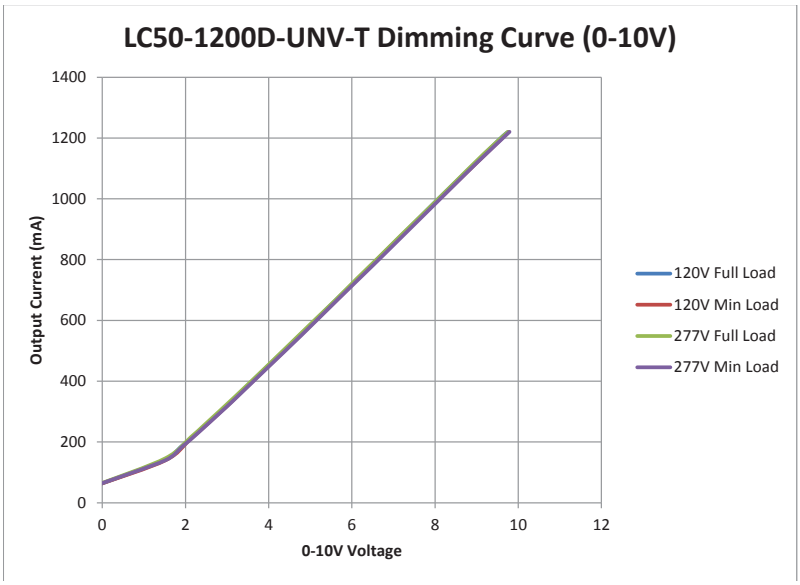

# 50W | Constant Current Case Style T

## GENERAL INFORMATION

| | |
|---|---|
| **LED Driver Type** | Constant Current (Class 2) |
| **Maximum Wattage** | 50 Watts |
| **Input Voltage** | 120 - 277 VAC ± 10% Universal |
| **Input Frequency** | 50/60Hz |
| **Total Harmonic Distortion** | <20% |

## CASE STYLE T: POLYCARBONATE

## PERFORMANCE CURVES

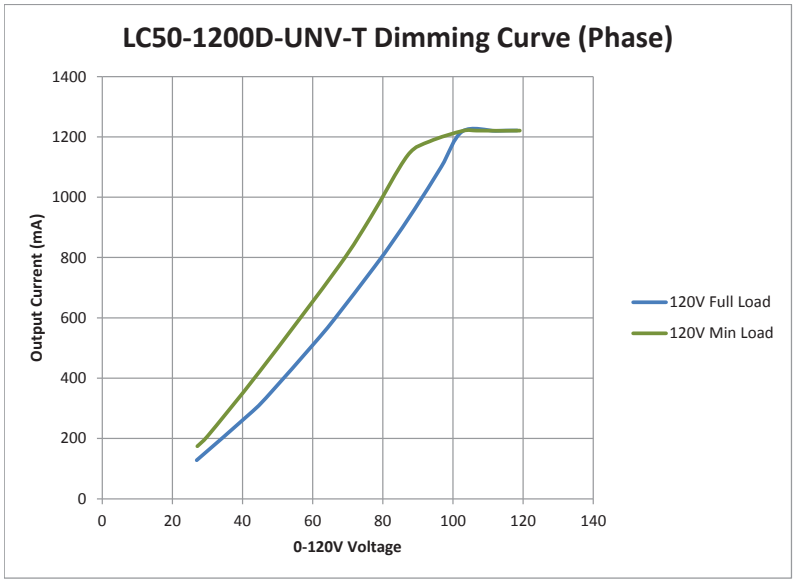

# 60W Constant Current Case Style F

## GENERAL INFORMATION

| | |
|---|---|
| **LED Driver Type** | Constant Current (Class 2) |
| **Maximum Wattage** | 60 Watts |
| **Input Voltage** | 120 - 277 VAC ± 10% Universal |
| **Input Frequency** | 50/60Hz |
| **Total Harmonic Distortion** | <20% |

## CASE STYLE F: METAL

## ELECTRICAL SPECIFICATIONS

| Watts | Rated Current | Output Voltage | Dimming Type | Input Voltage | Input Power | Input Current | Power Factor | Efficiency | Hatch Part Number |
|---|---|---|---|---|---|---|---|---|---|
| **Dimming Models** | | | | | | | | | |
| 60W | **700mA | 43 - 86 VDC | 0-10V Dimming | 120 - 277 VAC | 71W | 0.61/0.27A | >0.90 | 84% | **LC60-0700Z-UNV-F |
| | *1050mA | 29 - 57 VDC | 0-10V Dimming | 120 - 277 VAC | 71W | 0.61/0.27A | >0.90 | 84% | *LC60-1050Z-UNV-F |
| | *1200mA | 25 - 50 VDC | 0-10V Dimming | 120 - 277 VAC | 71W | 0.61/0.27A | >0.90 | 84% | *LC60-1200Z-UNV-F |
| | 1600mA | 18 - 38 VDC | 0-10V Dimming | 120 - 277 VAC | 71W | 0.61/0.27A | >0.90 | 84% | LC60-1600Z-UNV-F |
| | 1800mA | 17 - 33 VDC | 0-10V Dimming | 120 - 277 VAC | 71W | 0.61/0.27A | >0.90 | 84% | LC60-1800Z-UNV-F |
| | 2100mA | 14 - 28 VDC | 0-10V Dimming | 120 - 277 VAC | 71W | 0.61/0.27A | >0.90 | 84% | LC60-2100Z-UNV-F |
| | 2400mA | 12 - 25 VDC | 0-10V Dimming | 120 - 277 VAC | 71W | 0.61/0.27A | >0.90 | 84% | LC60-2400Z-UNV-F |

** Non-Class 2 *Class 2 US ONLY

## PRODUCT FEATURES

- Short circuit and overload protection
- Over temperature protection
- Suitable for dry and damp locations
- Withstanding voltage: I/P – O/P 2kVAC
- Operating temperature range: -40°C to 90°C (measured at Tcase)
- MTBF: 299,000 hours @ 40°C ambient (~70°C case temp)
- Surge voltage rating: L-N 4kV, L/N-GND 6kV
- Inrush Current: <30A Max @230VAC, cold start 25°C

## APPROVALS

- UL 8750 recognized component
- EN61000-3-2
- EMC: Meets FCC47 CFR Part 15 (Class B) consumer limits

## MECHANICAL SPECIFICATIONS: CASE STYLE F

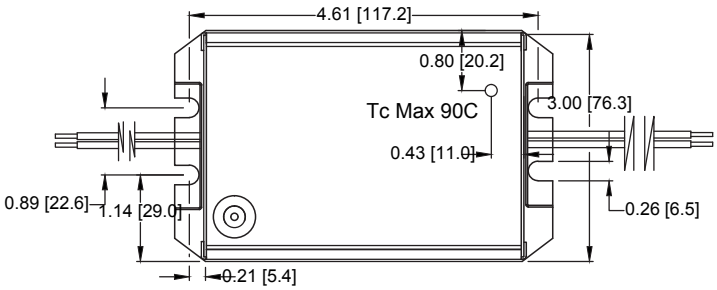


in[mm]

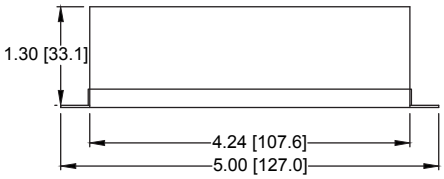


## DIMENSIONS [IN/MM]

| | |
|---|---|
| Length: | 4.61 [117.2] |
| Mounting: | 5.00 [127.0] |
| Width: | 3.00 [76.3] |
| Height: | 1.30 [33.1] |

## WIRING INFORMATION

| | |
|---|---|
| Input: | 12", Black (L), White (N) #18AWG |
| Output: | 12", Red (+), Blue (-) #22AWG |
| Dimming: | 12", Purple (+), Grey (-) # 22AWG |

## PACKAGING INFORMATION

| | |
|---|---|
| Weight: | 23oz |
| Quantity: | 30pc/carton |

## WARRANTY

- 5 year limited warranty

# 60W Constant Current Case Style F

## GENERAL INFORMATION

| | |
|---|---|
| **LED Driver Type** | Constant Current (Class 2) |
| **Maximum Wattage** | 60 Watts |
| **Input Voltage** | 120 - 277 VAC ± 10% Universal |
| **Input Frequency** | 50/60Hz |
| **Total Harmonic Distortion** | <20% |

## CASE STYLE F: METAL

## PERFORMANCE CURVES

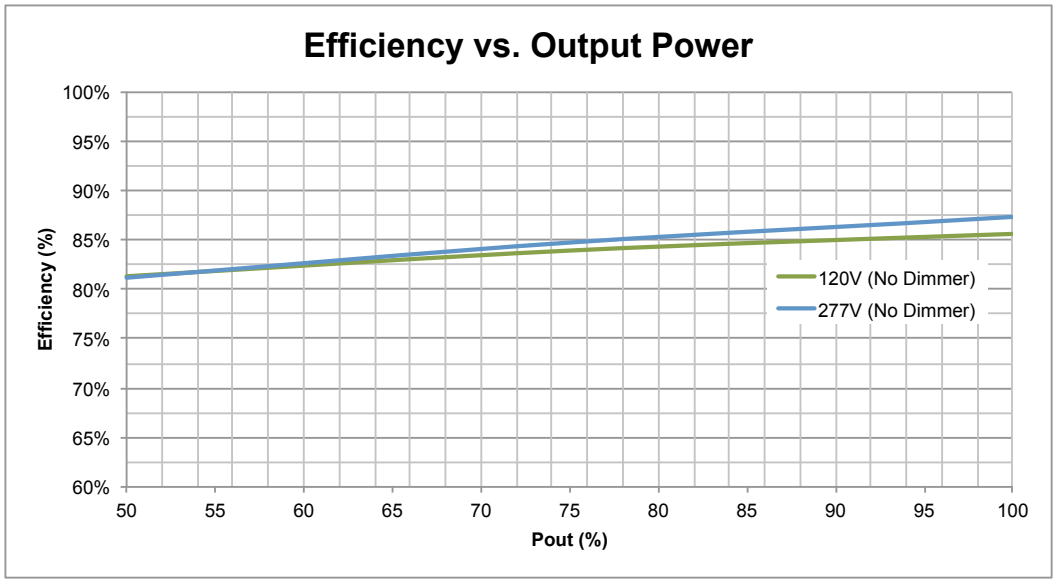


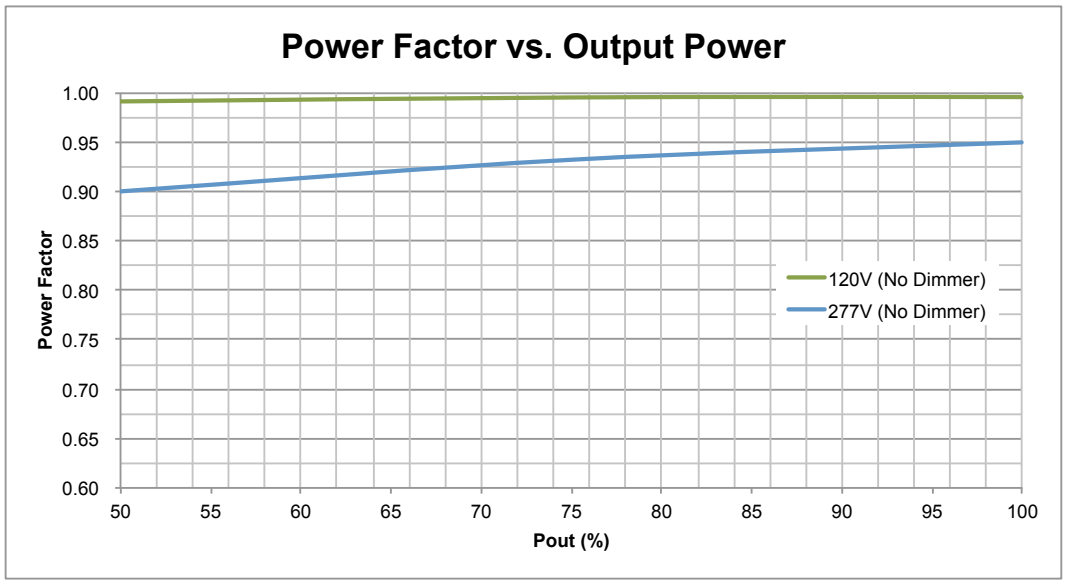


Efficiency and PF measured at 25°C.
Measurements made on model LC60-2400Z-UNV-F.

# 60W Constant Current Case Style F

## GENERAL INFORMATION

| | |
|---|---|
| **LED Driver Type** | Constant Current (Class 2) |
| **Maximum Wattage** | 60 Watts |
| **Input Voltage** | 120 - 277 VAC ± 10% Universal |
| **Input Frequency** | 50/60Hz |
| **Total Harmonic Distortion** | <20% |

## CASE STYLE F: METAL

## PERFORMANCE CURVES

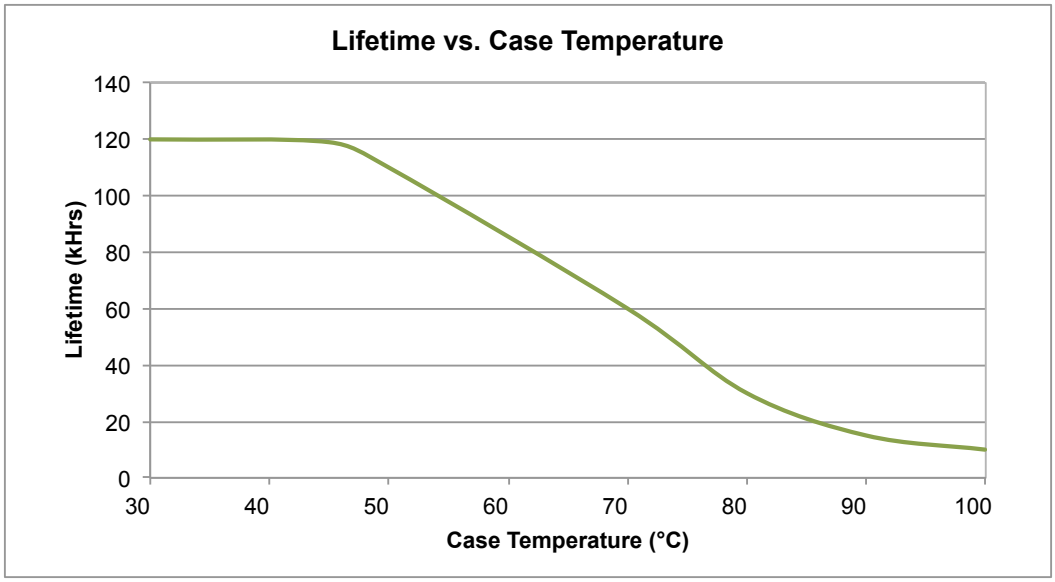


Efficiency and PF measured at 25°C.
Measurements made on model LC60-2400Z-UNV-F.

# 72W | Constant Current Case Style I

## GENERAL INFORMATION

| | |
|---|---|
| **LED Driver Type** | Constant Current (Class 2) |
| **Maximum Wattage** | 72 Watts |
| **Input Voltage** | 120 - 277 VAC ± 10% Universal |
| **Input Frequency** | 50/60Hz |
| **Total Harmonic Distortion** | <20% |

## CASE STYLE I: METAL

## ELECTRICAL SPECIFICATIONS

| Watts | Output Channels | Rated Current | Output Voltage | Dimming Type | Input Voltage | Input Power | Input Current | Power Factor | Efficiency | Hatch Part Number |
|---|---|---|---|---|---|---|---|---|---|---|
| **Dimming Models** | | | | | | | | | | |
| 72W | 4 X 18W | 500mA | 18 - 36 VDC | 0-10V Dimming | 120 - 277 VAC | 86W | 0.8/0.37A | >0.90 | 82% | LC72Q-0500Z-UNV-I |
| | 4 X 18W | 750mA | 12 - 24 VDC | 0-10V Dimming | 120 - 277 VAC | 86W | 0.8/0.37A | >0.90 | 82% | LC72Q-0750Z-UNV-I |
| | 2 X 36W | 1000mA | 18 - 36 VDC | 0-10V Dimming | 120 - 277 VAC | 86W | 0.8/0.35A | >0.90 | 82% | LC72D-1000Z-UNV-I |

## PRODUCT FEATURES

- Short circuit and overload protection
- Over temperature protection 2 output model
- Suitable for dry and damp locations
- Withstanding voltage: I/P – O/P 2kVAC
- Operating temperature range: -40°C to 70°C (measured at Tcase)
- MTBF: 274,000 hours @ 40°C ambient (~70°C case temp)
- Surge voltage rating: L-N 2kV, L/N-GND 4kV
- Inrush Current: <20A Max @230VAC, cold start 25°C

## APPROVALS

- UL 8750 recognized component
- EN61000-3-2
- EMC: Meets FCC47 CFR Part 15 (Class A) Non-consumer limits

## MECHANICAL SPECIFICATIONS: CASE STYLE I

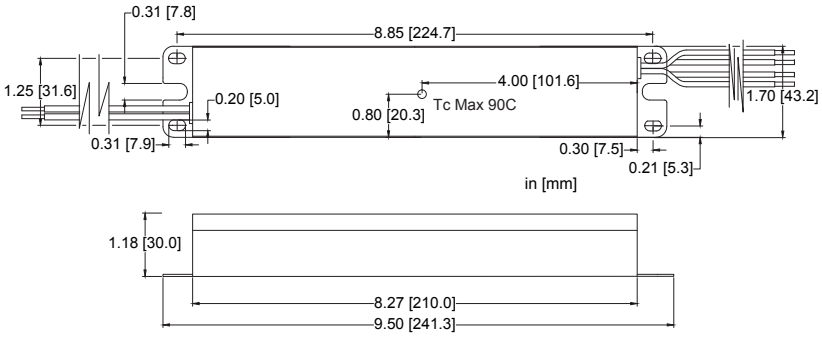


## DIMENSIONS [IN/MM]

| | |
|---|---|
| Length: | 8.85 [224.7] |
| Mounting: | 9.50 [241.3] |
| Width: | 1.70 [43.2] |
| Height: | 1.18 [30.0] |

## WIRING INFORMATION

| | |
|---|---|
| Input: | 12”, Black (L), White (N) #18AWG |
| Output: | 12”, Red (+), Blue (-) #22AWG |
| Dimming: | 12”, Purple (+), Grey (-) # 22AWG |

## PACKAGING INFORMATION

| | |
|---|---|
| Weight: | 21.2 oz |
| Quantity: | 30pc/carton |

## WARRANTY

- 5 year limited warranty

# 72W | Constant Current Case Style I

## GENERAL INFORMATION

| | |
|---|---|
| **LED Driver Type** | Constant Current (Class 2) |
| **Maximum Wattage** | 72 Watts |
| **Input Voltage** | 120 - 277 VAC ± 10% Universal |
| **Input Frequency** | 50/60Hz |
| **Total Harmonic Distortion** | <20% |

## CASE STYLE I: METAL

## PERFORMANCE CURVES

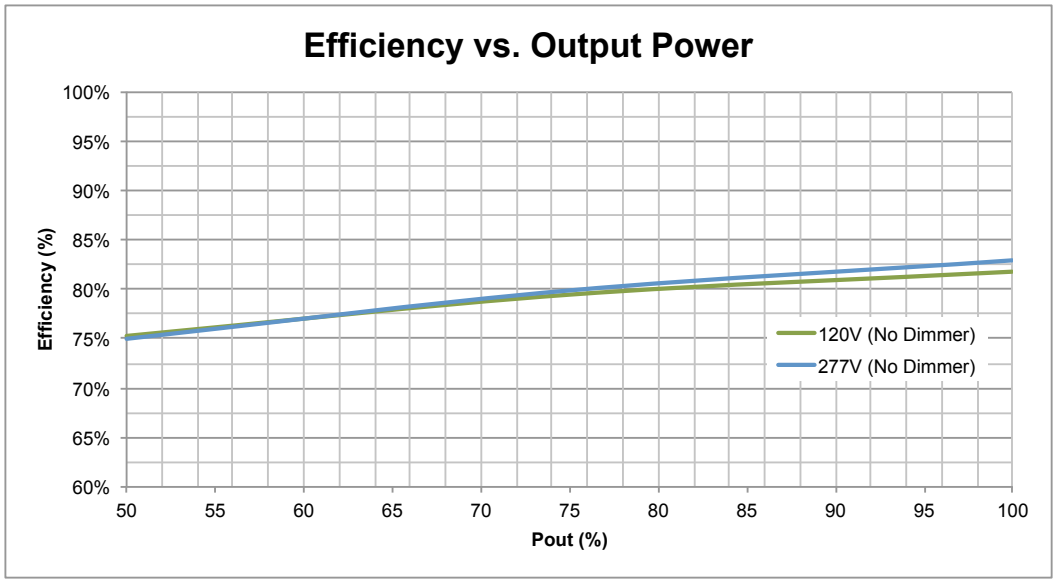


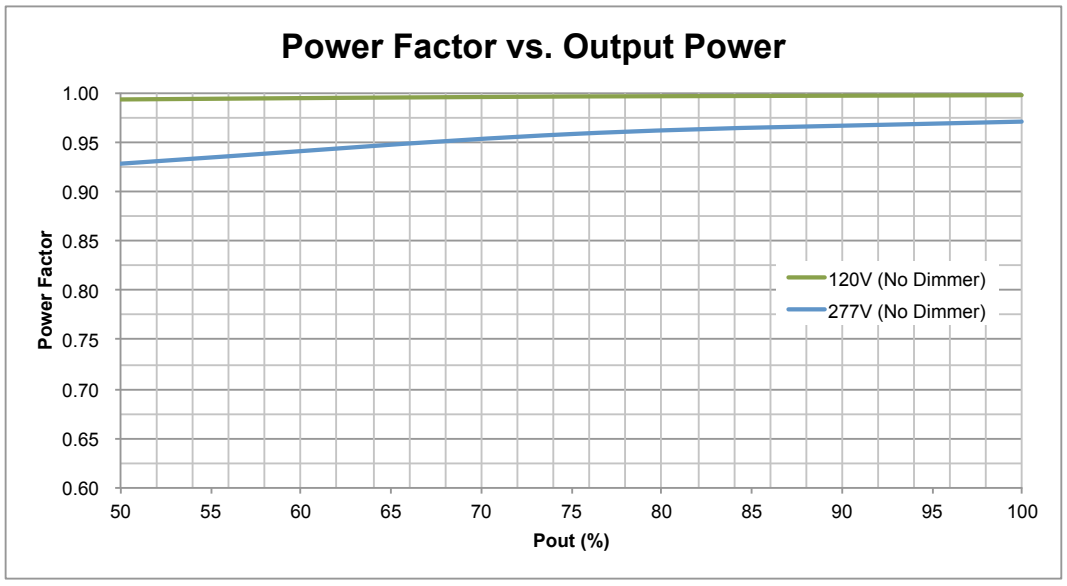


Efficiency and PF measured at 25°C.
Measurements made on model LC72D-1000Z-UNV-I.

# 72W | Constant Current Case Style I

## GENERAL INFORMATION

| | |
|---|---|
| **LED Driver Type** | Constant Current (Class 2) |
| **Maximum Wattage** | 72 Watts |
| **Input Voltage** | 120 - 277 VAC ± 10% Universal |
| **Input Frequency** | 50/60Hz |
| **Total Harmonic Distortion** | <20% |

## CASE STYLE I: METAL

## PERFORMANCE CURVES

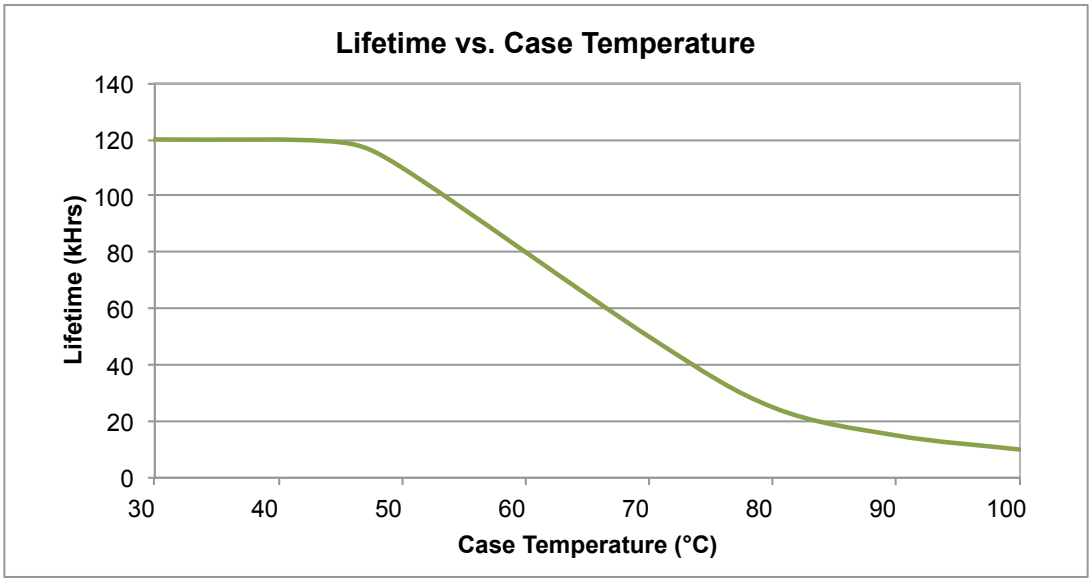


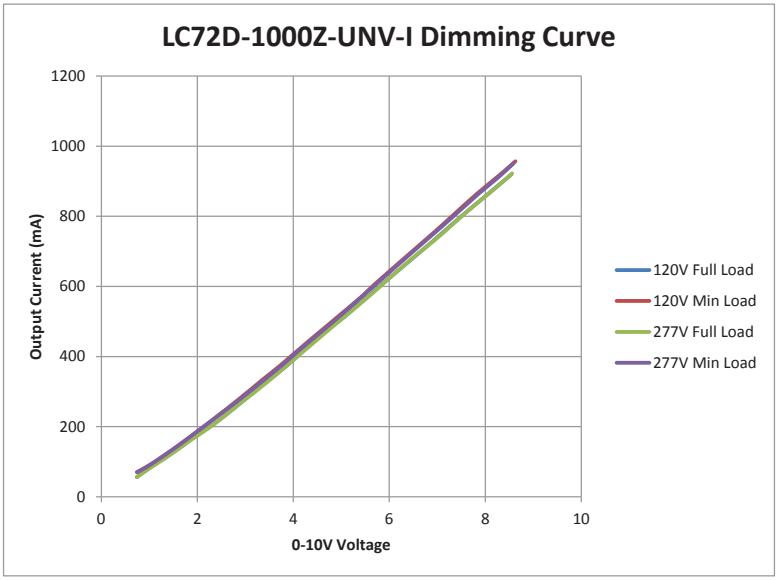

# 75W | Constant Current Case Style I

## GENERAL INFORMATION

| | |
|---|---|
| **LED Driver Type** | Constant Current (Class 2) |
| **Maximum Wattage** | 75 Watts |
| **Input Voltage** | 120 - 277 VAC ± 10% Universal |
| **Input Frequency** | 50/60Hz |
| **Total Harmonic Distortion** | <20% |

## CASE STYLE I: METAL

## ELECTRICAL SPECIFICATIONS

| Watts | Rated Current | Output Voltage | Dimming Type | Input Voltage | Input Power | Input Current | Power Factor | Efficiency | Hatch Part Number |
|---|---|---|---|---|---|---|---|---|---|
| **Dimming Models** | | | | | | | | | |
| 75W | *1400mA | 27 - 54 VDC | 0-10V Dimming | 120 - 277 VAC | 86W | 0.77/0.34A | >0.90 | 90% | *LC75-1400Z-UNV-I |
| | 1800mA | 21 - 42 VDC | 0-10V Dimming | 120 - 277 VAC | 86W | 0.77/0.34A | >0.90 | 89% | LC75-1800Z-UNV-I |
| | 2100mA | 18 - 36 VDC | 0-10V Dimming | 120 - 277 VAC | 86W | 0.77/0.34A | >0.90 | 88% | LC75-2100Z-UNV-I |

*Class 2 US ONLY

## PRODUCT FEATURES

- Short circuit and overload protection
- Over temperature protection
- Suitable for dry and damp locations
- Withstanding voltage: I/P – O/P 2kVAC
- Surge rating: 2.5kV L-N, L/N-GND
- Operating temperature range: -40°C to 90°C (measured at Tcase)
- MTBF: 125,000 hours at 40°C ambient (~70°C Case temp)
- Inrush Current: <20A Max @230VAC, cold start 25°C

## APPROVALS

- UL 8750 recognized component
- EN61000-3-2
- EMC: Meets FCC47 CFR Part 15 (Class B) Consumer limits

## MECHANICAL SPECIFICATIONS: CASE STYLE I

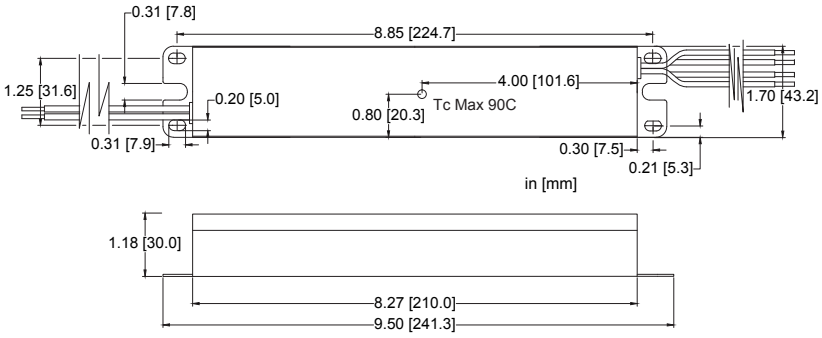


## DIMENSIONS [IN/MM]

| | |
|---|---|
| Length: | 8.85 [224.7] |
| Mounting: | 9.50 [241.3] |
| Width: | 1.70 [43.2] |
| Height: | 1.18 [30.0] |

## WIRING INFORMATION

| | |
|---|---|
| Input: | 12”, Black (L), White (N) #18AWG |
| Output: | 12”, Red (+), Blue (-) #22AWG |
| Dimming: | 12”, Purple (+), Grey (-) # 22AWG |

## PACKAGING INFORMATION

| | |
|---|---|
| Weight: | 21.2 oz |
| Quantity: | 30pc/carton |

## WARRANTY

- 5 year limited warranty

# 100W Constant Current Case Style I

## GENERAL INFORMATION

| | |
|---|---|
| **LED Driver Type** | Constant Current |
| **Maximum Wattage** | 100 Watts |
| **Input Voltage** | 120 - 277 VAC ± 10% Universal |
| **Input Frequency** | 50/60Hz |
| **Total Harmonic Distortion** | <20% |

## CASE STYLE I: METAL

## ELECTRICAL SPECIFICATIONS

| Watts | Rated Current | Output Voltage | Dimming Type | Input Voltage | Input Power | Input Current | Power Factor | Efficiency | Hatch Part Number |
|---|---|---|---|---|---|---|---|---|---|
| **Non-Dimming Models** | | | | | | | | | |
| 100W | 530mA | 94 - 189 VDC | Non-Dimming | 120 - 277 VAC | 108W | 0.93/0.42A | >0.99 | 92% | LC100-0530N-UNV-I |
| | 600mA | 83 - 167 VDC | Non-Dimming | 120 - 277 VAC | 108W | 0.93/0.42A | >0.99 | 92% | LC100-0600N-UNV-I |
| | 700mA | 72 - 143 VDC | Non-Dimming | 120 - 277 VAC | 108W | 0.93/0.42A | >0.99 | 92% | LC100-0700N-UNV-I |
| | 800mA | 63 - 125 VDC | Non-Dimming | 120 - 277 VAC | 108W | 0.93/0.42A | >0.99 | 92% | LC100-0800N-UNV-I |
| | 900mA | 56 - 111 VDC | Non-Dimming | 120 - 277 VAC | 108W | 0.93/0.42A | >0.99 | 92% | LC100-0900N-UNV-I |
| | 1000mA | 50 - 100 VDC | Non-Dimming | 120 - 277 VAC | 108W | 0.93/0.42A | >0.99 | 92% | LC100-1000N-UNV-I |
| | 1050mA | 48 - 95 VDC | Non-Dimming | 120 - 277 VAC | 108W | 0.93/0.42A | >0.99 | 92% | LC100-1050N-UNV-I |
| | *2000mA | 17 - 50 VDC | Non-Dimming | 120 - 277 VAC | 108W | 0.93/0.42A | >0.99 | 92% | *LC100-2000N-UNV-I |
| | *2100mA | 24 - 48 VDC | Non-Dimming | 120 - 277 VAC | 108W | 0.93/0.42A | >0.99 | 92% | *LC100-2100N-UNV-I |
| **Dimming Models** | | | | | | | | | |
| 100W | 530mA | 94 - 189 VDC | 0-10V Dimming | 120 - 277 VAC | 108W | 1.04/0.47A | >0.90 | 91% | LC100-0530Z-UNV-I |
| | 600mA | 83 - 167 VDC | 0-10V Dimming | 120 - 277 VAC | 108W | 1.04/0.47A | >0.90 | 91% | LC100-0600Z-UNV-I |
| | 700mA | 72 - 143 VDC | 0-10V Dimming | 120 - 277 VAC | 108W | 1.04/0.47A | >0.90 | 91% | LC100-0700Z-UNV-I |
| | 800mA | 63 - 125 VDC | 0-10V Dimming | 120 - 277 VAC | 108W | 1.04/0.47A | >0.90 | 91% | LC100-0800Z-UNV-I |
| | 900mA | 56 - 111 VDC | 0-10V Dimming | 120 - 277 VAC | 108W | 1.04/0.47A | >0.90 | 91% | LC100-0900Z-UNV-I |
| | 1000mA | 52 - 104 VDC | 0-10V Dimming | 120 - 277 VAC | 108W | 1.04/0.47A | >0.90 | 91% | LC100-1000Z-UNV-I |
| | 1050mA | 48 - 95 VDC | 0-10V Dimming | 120 - 277 VAC | 108W | 1.04/0.47A | >0.90 | 90% | LC100-1050Z-UNV-I |
| | *2000mA | 17 - 50 VDC | 0-10V Dimming | 120 - 277 VAC | 108W | 1.04/0.47A | >0.90 | 90% | *LC100-2000Z-UNV-I |
| | *2100mA | 24 - 48 VDC | 0-10V Dimming | 120 - 277 VAC | 108W | 1.04/0.47A | >0.90 | 90% | *LC100-2100Z-UNV-I |
| | **2750mA | 18 - 36 VDC | 0-10V Dimming | 120 - 277 VAC | 108W | 1.04/0.47A | >0.90 | 89% | **LC100-2750Z-UNV-I |
| | **2800mA | 17 - 35 VDC | 0-10V Dimming | 120 - 277 VAC | 108W | 1.04/0.47A | >0.90 | 89% | **LC100-2800Z-UNV-I |

*Class 2 US ONLY **Class 2

## PRODUCT FEATURES

- Short circuit and overload protection
- Over temperature protection
- Suitable for dry and damp locations
- Withstanding voltage: I/P – O/P 2kVAC
- Surge rating: 2.5kV L-N, L/N-GND
- Operating temperature range: -40°C to 90°C (measured at Tcase)
- MTBF: 170,000 hours at 40°C ambient (~70°C Case temp)
- Inrush Current: <20A Max @230VAC, cold start 25°C

## APPROVALS

- UL 8750 recognized component
- EN61000-3-2
- EMC: Meets FCC47 CFR Part 15 (Class B) Consumer limits

RoHS COMPLIANT

**TYPE HL** **TYPE TL**

# 100W Constant Current Case Style I

## GENERAL INFORMATION

| | |
|---|---|
| **LED Driver Type** | Constant Current |
| **Maximum Wattage** | 100 Watts |
| **Input Voltage** | 120 - 277 VAC ± 10% Universal |
| **Input Frequency** | 50/60Hz |
| **Total Harmonic Distortion** | <20% |

## CASE STYLE I: METAL

## MECHANICAL SPECIFICATIONS: CASE STYLE I

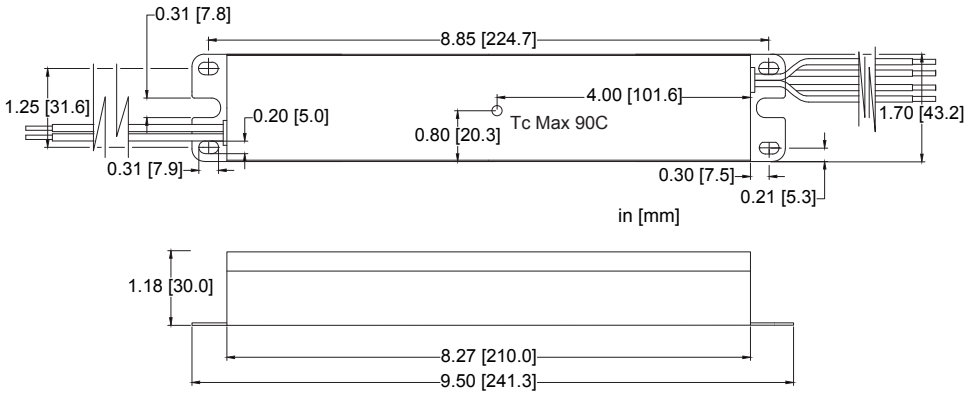


## DIMENSIONS [IN/MM]

| | |
|---|---|
| Length: | 8.85 [224.7] |
| Mounting: | 9.50 [241.3] |
| Width: | 1.70 [43.2] |
| Height: | 1.18 [30.0] |

## WIRING INFORMATION

| | |
|---|---|
| Input: | 12”, Black (L), White (N) 18AWG |
| Output: | 12”, Red (+), Blue (-) #22AWG |
| Dimming: | 12”, Purple (+), Grey (-) # 22AWG |

## PACKAGING INFORMATION

| | |
|---|---|
| Weight: | 21.2 oz |
| Quantity: | 30pc/carton |

## WARRANTY

- 5 year limited warranty

# 100W Constant Current Case Style I

## GENERAL INFORMATION

| | |
|---|---|
| **LED Driver Type** | Constant Current |
| **Maximum Wattage** | 100 Watts |
| **Input Voltage** | 120 - 277 VAC ± 10% Universal |
| **Input Frequency** | 50/60Hz |
| **Total Harmonic Distortion** | <20% |

## CASE STYLE I: METAL

## PERFORMANCE CURVES

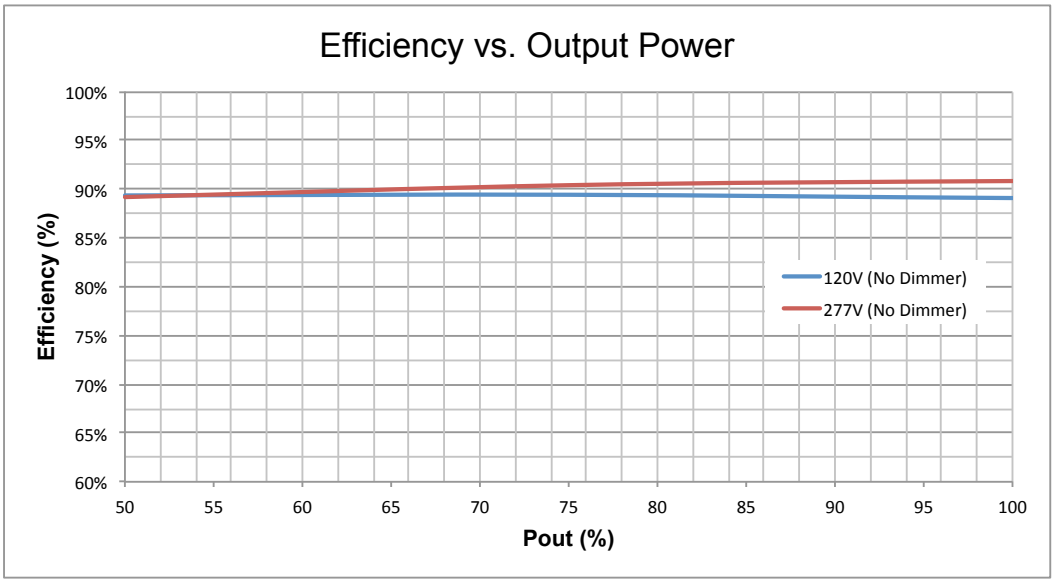


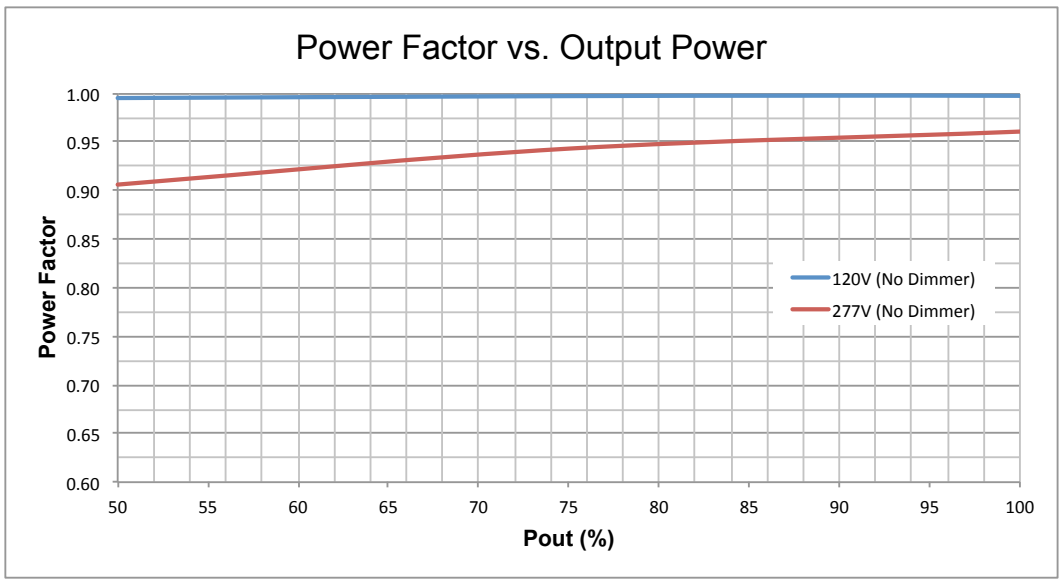


THD, PF and efficiency measured at 25°C.
Measurements made on model LC100-2100Z-UNV-I.

# 100W Constant Current Case Style I

## GENERAL INFORMATION

| | |
|---|---|
| **LED Driver Type** | Constant Current |
| **Maximum Wattage** | 100 Watts |
| **Input Voltage** | 120 - 277 VAC ± 10% Universal |
| **Input Frequency** | 50/60Hz |
| **Total Harmonic Distortion** | <20% |

## CASE STYLE I: METAL

## PERFORMANCE CURVES

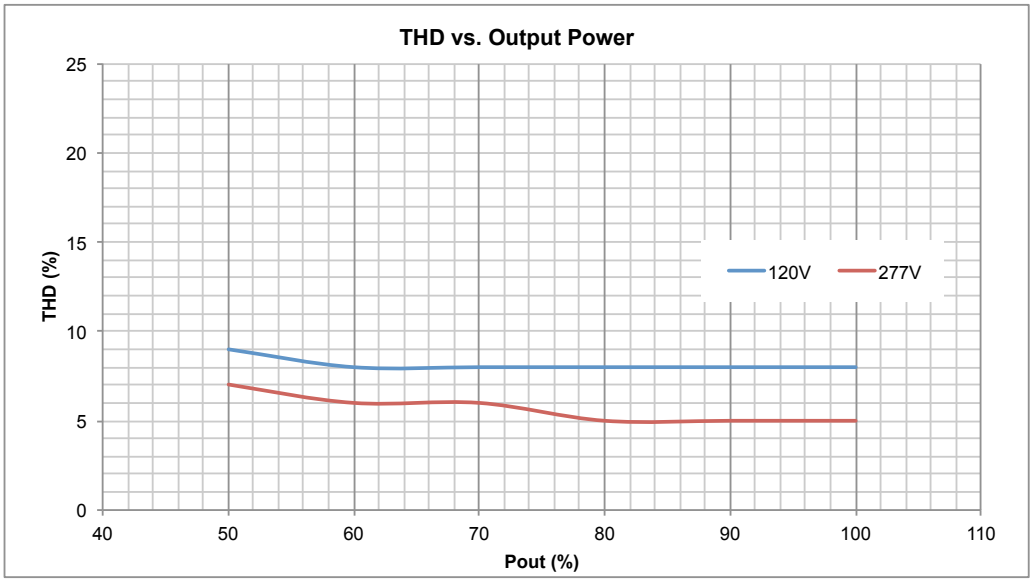


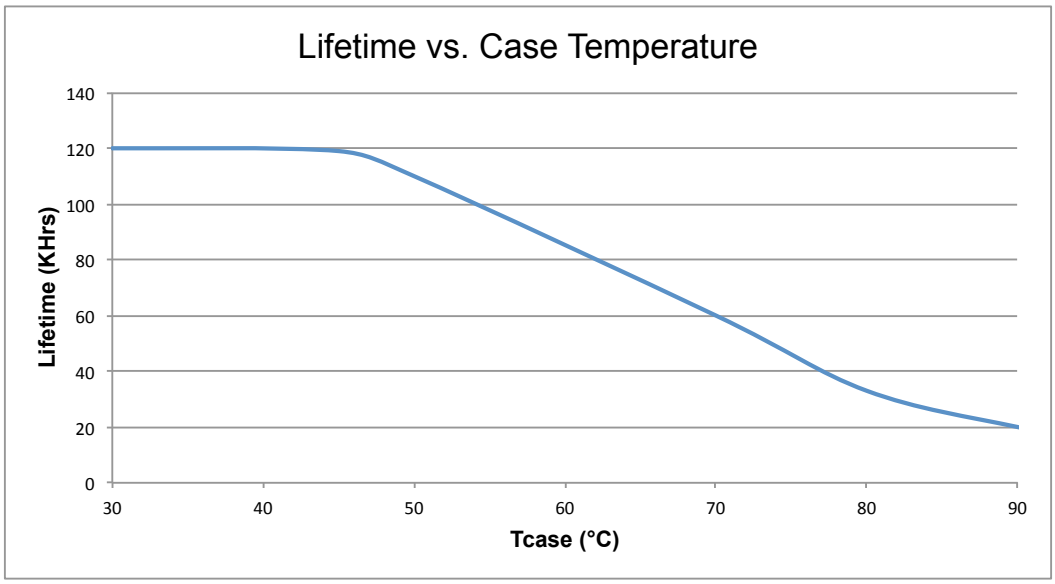


THD, PF and efficiency measured at 25°C.
Measurements made on model LC100-2100Z-UNV-I.

# 120W | Constant Current Case Style BB

## GENERAL INFORMATION

| | |
|---|---|
| **LED Driver Type** | Constant Current (LVLE) |
| **Maximum Wattage** | 120 Watts |
| **Input Voltage** | 120 - 277 VAC ± 10% Universal |
| **Input Frequency** | 50/60Hz |
| **Total Harmonic Distortion** | <20% |

## CASE STYLE BB: METAL

## ELECTRICAL SPECIFICATIONS

| Watts | Rated Current | Output Voltage | Dimming Type | Input Voltage | Input Power | Input Current | Power Factor | Efficiency | Hatch Part Number |
|---|---|---|---|---|---|---|---|---|---|
| **Non-Dimming Models** | | | | | | | | | |
| 120W | 2000mA | 30 - 60 VDC | Non-Dimming | 120 - 277 VAC | 129W | 1.09/0.50A | >0.90 | 92% | LC120-2000N-UNV-BB |
| | 2100mA | 29 - 57 VDC | Non-Dimming | 120 - 277 VAC | 129W | 1.08/0.49A | >0.90 | 92% | LC120-2100N-UNV-BB |
| **Dimming Models** | | | | | | | | | |
| 120W | 2000mA | 30 - 60 VDC | 0-10V Dimming | 120 - 277 VAC | 129W | 1.10/0.50A | >0.90 | 92% | LC120-2000Z-UNV-BB |
| | 2100mA | 29 - 57 VDC | 0-10V Dimming | 120 - 277 VAC | 129W | 1.10/0.50A | >0.90 | 92% | LC120-2100Z-UNV-BB |

## PRODUCT FEATURES

- Short circuit and overload protection
- Over temperature protection
- Suitable for dry and damp locations
- Withstanding voltage: I/P – O/P 2kVAC
- Operating temperature range: -40°C to 90°C (measured at Tcase)
- MTBF: 139,000 hours @ 40°C ambient (~70°C case temp)
- Surge voltage rating: L-N 4kV, L/N-GND 6kV
- Inrush Current: <40A Max @230VAC, cold start 25°C

## APPROVALS

- UL 8750 recognized component
- EN61000-3-2
- EMC: Meets FCC47 CFR Part 15 (Class B) consumer limits

RoHS COMPLIANT

**TYPE HL** **TYPE TL**

## MECHANICAL SPECIFICATIONS: CASE STYLE BB

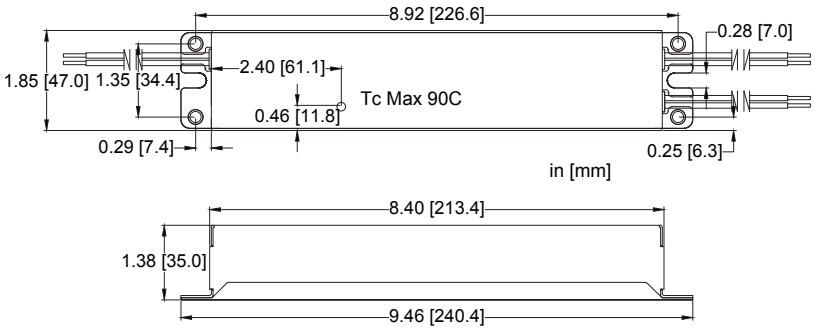


## DIMENSIONS [IN/MM]

| | |
|---|---|
| Length: | 8.92 [226.6] |
| Mounting: | 9.46 [240.4] |
| Width: | 1.85 [47.0] |
| Height: | 1.38 [35.0] |

## WIRING INFORMATION

| | |
|---|---|
| Input: | 12”, Black (L), White (N) #18AWG |
| Output: | 12”, Red (+), Blue (-) #22AWG |
| Dimming: | 12”, Purple (+), Grey (-) # 22AWG |

## PACKAGING INFORMATION

| | |
|---|---|
| Weight: | 22.9 oz |
| Quantity: | 20pc/carton |

## WARRANTY

- 5 year limited warranty

# 130W Constant Current Case Style BB

## GENERAL INFORMATION

| | |
|---|---|
| **LED Driver Type** | Constant Current (LVLE) |
| **Maximum Wattage** | 130 Watts |
| **Input Voltage** | 120 - 277 VAC ± 10% Universal |
| **Input Frequency** | 50/60Hz |
| **Total Harmonic Distortion** | <20% |

## CASE STYLE BB: METAL

## ELECTRICAL SPECIFICATIONS

| Watts | Rated Current | Output Voltage | Dimming Type | Input Voltage | Input Power | Input Current | Power Factor | Efficiency | Hatch Part Number |
|---|---|---|---|---|---|---|---|---|---|
| **Non-Dimming Models** | | | | | | | | | |
| 130W | 1600mA | 41 - 81 VDC | Non-Dimming | 120 - 277 VAC | 140W | 1.17/0.54A | >0.90 | 93% | LC130-1600N-UNV-BB |
| **Dimming Models** | | | | | | | | | |
| 130W | 1600mA | 41 - 81 VDC | 0-10V Dimming | 120 - 277 VAC | 140W | 1.17/0.54A | >0.90 | 93% | LC130-1600Z-UNV-BB |

## PRODUCT FEATURES

- Short circuit and overload protection
- Over temperature protection
- Suitable for dry and damp locations
- Withstanding voltage: I/P – O/P 2kVAC
- Minimum start temp: -40°C
- MTBF: TBD
- Surge voltage rating: L-N 4kV, L/N-GND 6kV
- Inrush Current: <40A Max @230VAC, cold start 25°C

## APPROVALS

- UL 8750 recognized component
- EN61000-3-2
- EMC: Meets FCC47 CFR Part 15 (Class B) consumer limits

TYPE HL TYPE TL

## MECHANICAL SPECIFICATIONS: CASE STYLE BB

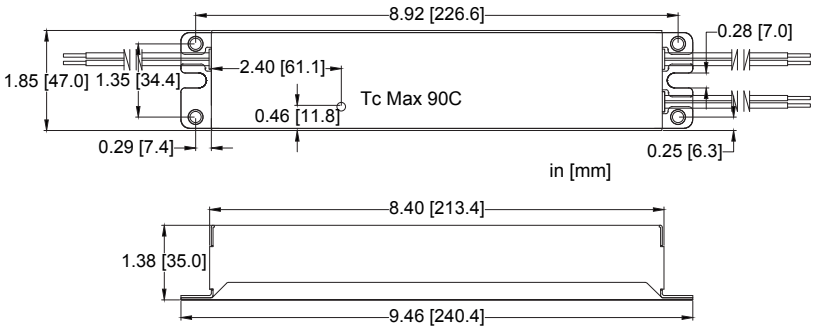


### DIMENSIONS [IN/MM]

| | |
|---|---|
| Length: | 8.92 [226.6] |
| Mounting: | 9.46 [240.4] |
| Width: | 1.85 [47.0] |
| Height: | 1.38 [35.0] |

### WIRING INFORMATION

| | |
|---|---|
| Input: | 12”, Black (L), White (N) #18AWG |
| Output: | 12”, Red (+), Blue (-) #18AWG |
| Dimming: | 12”, Purple (+), Grey (-) # 18AWG |

### PACKAGING INFORMATION

| | |
|---|---|
| Weight: | 22.9 oz |
| Quantity: | 20pc/carton |

## WARRANTY

- 5 year limited warranty

# 150W Constant Current Case Style BB

## GENERAL INFORMATION

| | |
|---|---|
| **LED Driver Type** | Constant Current (LVLE) |
| **Maximum Wattage** | 150 Watts |
| **Input Voltage** | 120 - 277 VAC ± 10% Universal |
| **Input Frequency** | 50/60Hz |
| **Total Harmonic Distortion** | <20% |

## CASE STYLE BB: METAL

## ELECTRICAL SPECIFICATIONS

| Watts | Rated Current | Output Voltage | Dimming Type | Input Voltage | Input Power | Input Current | Power Factor | Efficiency | Hatch Part Number |
|---|---|---|---|---|---|---|---|---|---|
| **Non-Dimming Models** | | | | | | | | | |
| 150W | 530mA | 141 - 283 VDC | Non-Dimming | 120 - 277 VAC | 160W | 1.38/0.66A | >0.99 | 94% | LC150-0530N-UNV-BB |
| | 700mA | 107 - 214 VDC | Non-Dimming | 120 - 277 VAC | 160W | 1.38/0.66A | >0.99 | 94% | LC150-0700N-UNV-BB |
| | 1050mA | 72 - 143 VDC | Non-Dimming | 120 - 277 VAC | 160W | 1.38/0.66A | >0.99 | 94% | LC150-1050N-UNV-BB |
| **Dimming Models** | | | | | | | | | |
| 150W | 530mA | 141 - 283 VDC | 0-10V Dimming | 120 - 277 VAC | 160W | 1.38/0.66A | >0.99 | 94% | LC150-0530Z-UNV-BB |
| | 700mA | 107 - 214 VDC | 0-10V Dimming | 120 - 277 VAC | 160W | 1.38/0.66A | >0.99 | 94% | LC150-0700Z-UNV-BB |
| | 1050mA | 72 - 143 VDC | 0-10V Dimming | 120 - 277 VAC | 160W | 1.38/0.66A | >0.99 | 94% | LC150-1050Z-UNV-BB |

## PRODUCT FEATURES

- Short circuit and overload protection
- Over temperature protection
- Suitable for dry and damp locations
- Withstanding voltage: I/P – O/P 2kVAC
- Operating temperature range: -40°C to 90°C (measured at Tcase)
- Surge rating: 2.5kV, L-N, L/N-GND
- Inrush Current: <40A Max @230VAC, cold start 25°C

## APPROVALS

- UL 8750 recognized component
- EN61000-3-2
- EMC: Meets FCC47 CFR Part 15 (Class B) consumer limits

RoHS COMPLIANT

**TYPE HL** **TYPE TL**

## MECHANICAL SPECIFICATIONS: CASE STYLE BB

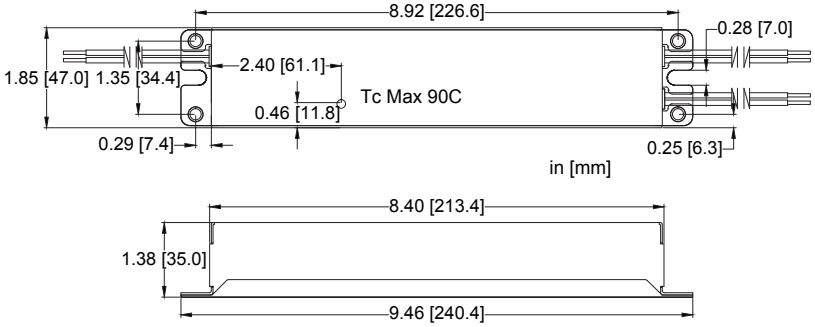


### DIMENSIONS [IN/MM]

| | |
|---|---|
| Length: | 8.92 [226.6] |
| Mounting: | 9.46 [240.4] |
| Width: | 1.85 [47.0] |
| Height: | 1.38 [35.0] |

### WIRING INFORMATION

| | |
|---|---|
| Input: | 12”, Black (L), White (N) #18AWG |
| Output: | 12”, Red (+), Blue (-) #18AWG |
| Dimming: | 12”, Purple (+), Grey (-) # 22AWG |

### PACKAGING INFORMATION

| | |
|---|---|
| Weight: | 22.9 oz |
| Quantity: | 25pc/carton |

## WARRANTY

- 5 year limited warranty

# 150W | Constant Current Case Style BB

## GENERAL INFORMATION

| | |
|---|---|
| **LED Driver Type** | Constant Current (LVLE) |
| **Maximum Wattage** | 150 Watts |
| **Input Voltage** | 120 - 277 VAC ± 10% Universal |
| **Input Frequency** | 50/60Hz |
| **Total Harmonic Distortion** | <20% |

## CASE STYLE BB: METAL

## PERFORMANCE CURVES

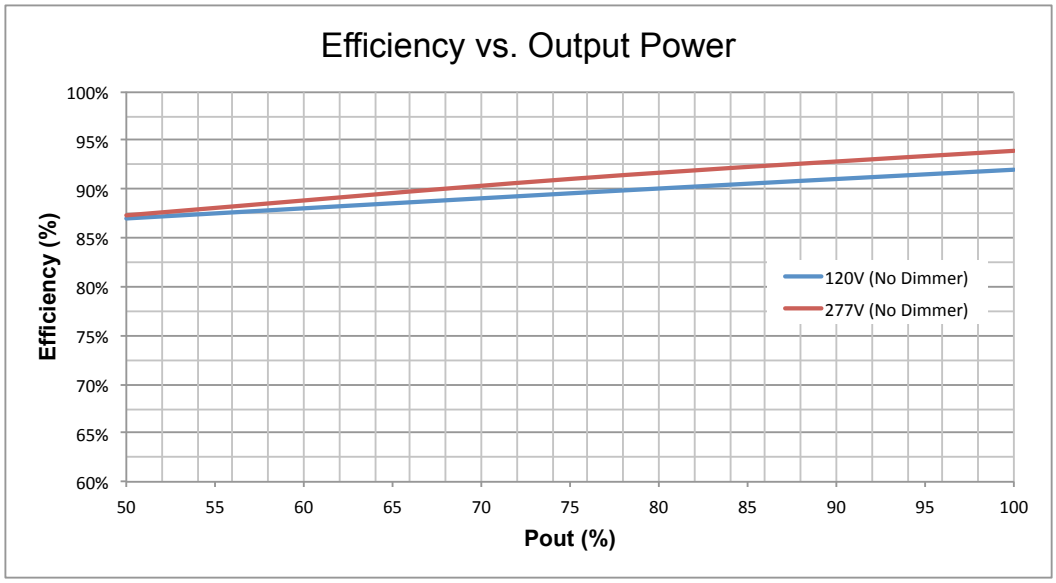


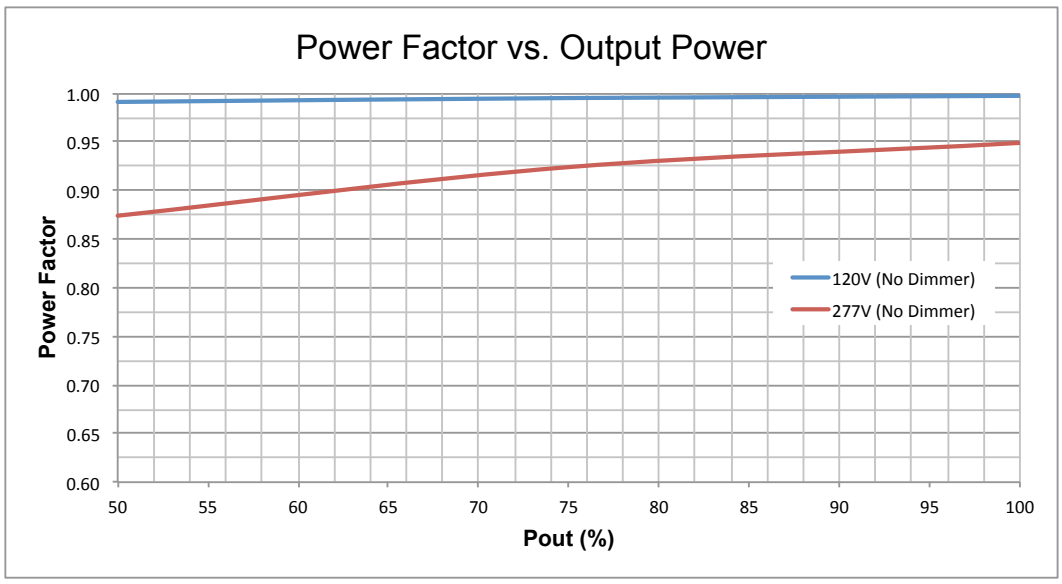


THD, PF and efficiency measured at 25°C.
Measurements made on model LC150-1500Z-UNV-BB

# 150W | Constant Current Case Style BB

## GENERAL INFORMATION

| | |
|---|---|
| **LED Driver Type** | Constant Current (LVLE) |
| **Maximum Wattage** | 150 Watts |
| **Input Voltage** | 120 - 277 VAC ± 10% Universal |
| **Input Frequency** | 50/60Hz |
| **Total Harmonic Distortion** | <20% |

## CASE STYLE BB: METAL

## PERFORMANCE CURVES

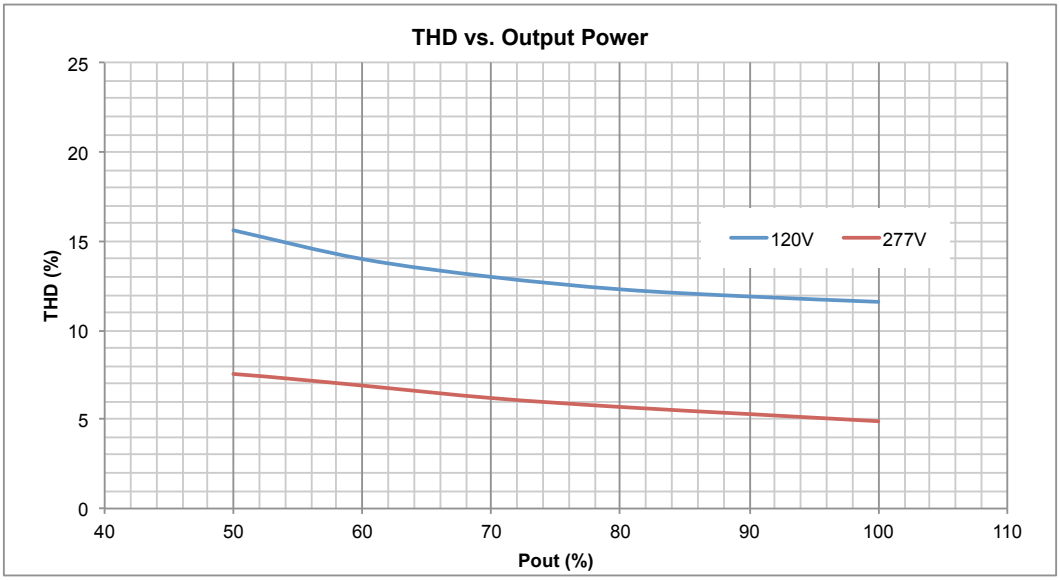


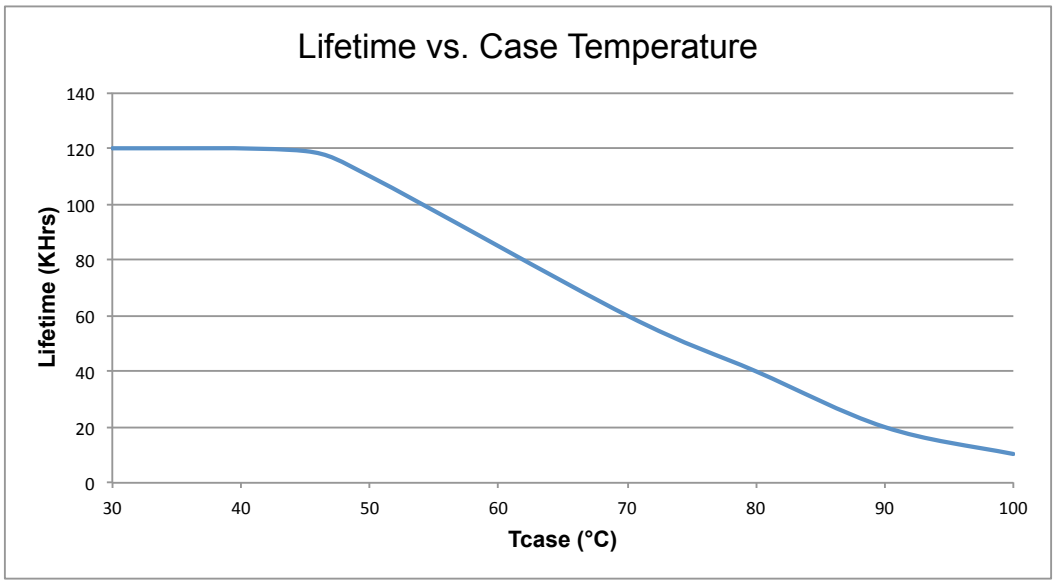


THD, PF and efficiency measured at 25°C.
Measurements made on model LC150-1500Z-UNV-BB

# 200W Constant Current Case Style NN

## GENERAL INFORMATION

| | |
|---|---|
| **LED Driver Type** | Constant Current (LVLE) |
| **Maximum Wattage** | 200 Watts |
| **Input Voltage** | 120 - 277 VAC ± 10% Universal |
| **Input Frequency** | 50/60Hz |
| **Total Harmonic Distortion** | <20% |

## CASE STYLE NN: METAL

## ELECTRICAL SPECIFICATIONS

| Watts | Rated Current | Output Voltage | Dimming Type | Input Voltage | Input Power | Input Current | Power Factor | Efficiency | Hatch Part Number |
|---|---|---|---|---|---|---|---|---|---|
| **Dimming Models** | | | | | | | | | |
| 200W | 525mA | 190-381 VDC | 0-10V Dimming | 120-277 VAC | 213W | 1.8 0/ 0.83A | > 0 .99 | 93% | LC200-0525Z-UNV-NN |
| | 700mA | 143-286 VDC | 0-10V Dimming | 120-277 VAC | 213W | 1.80 /0.83A | > 0 .99 | 93% | LC200-0700Z-UNV-NN |
| | 1050mA | 95-190 VDC | 0-10V Dimming | 120-277 VAC | 213W | 1.80 / 0.83A | > 0 .99 | 93% | LC200-1050Z-UNV-NN |

## PRODUCT FEATURES

- Short circuit and overload protection
- Over temperature protection
- Suitable for dry, damp and wet locations
- Withstanding voltage: I/P – O/P 2kVAC
- Operating temperature range: -40°C to 90°C (measured at Tcase)
- MTBF: 172,000 hours @ 40°C ambient (~70°C case temp)
- Surge voltage rating: L-N 4kV, L/N-GND 6kV
- Inrush Current: <40A Max @230VAC, cold start 25°C

## APPROVALS

- UL 8750 recognized component
- EN61000-3-2
- EMC: Meets FCC47 CFR Part 15 (Class B) Consumer Limits @ 120V
- EMC: Meets FCC47 CFR Part 15 (Class A) Non Consumer limits @ 277V
- IP67

## MECHANICAL SPECIFICATIONS: CASE STYLE NN

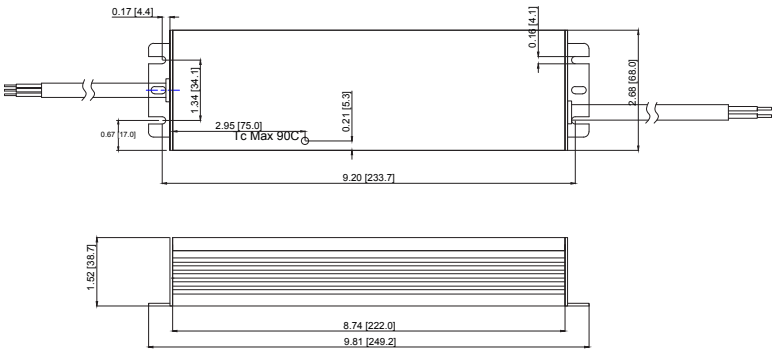


## DIMENSIONS [IN/MM]

| | |
|---|---|
| Length: | 8.74 [222.0] |
| Mounting: | 9.81 [249.2] |
| Width: | 2.68 [68.0] |
| Height: | 1.52 [38.7] |

## WIRING INFORMATION

| | |
|---|---|
| Input: | Type SJTW, 12”, Black (L), White (N) Green (GND) #18AWG |
| Output: | Type STW, 12”, Red (+), Blue (-) #18AWG |
| Dimming: | 12”, Purple (+), Grey (-) # 22AWG |

## PACKAGING INFORMATION

| | |
|---|---|
| Weight: | 40oz |
| Quantity: | 20pc/carton |

## WARRANTY

- 5 year limited warranty

# hatch LED DRIVERS

# LCA003-RL-UNI

## CONSTANT CURRENT

3 WATT 350mA

## ELECTRONIC SPECIFICATIONS

| | |
|---|---|
| Input Voltage Range | 90-264VAC |
| Input Frequency | 50/60Hz |
| Output Power | 1-3W |
| Input Current | 40mA@230VAC |
| Output Voltage | 3-9VDC |
| Output Current | 350mA |
| Power Factor | 0.55 |
| Ambient Temp. | -20°-+50°C |
| Case Temp. (Tc) | +90°C |
| Class 2 | Yes |

## WIRING DIAGRAM

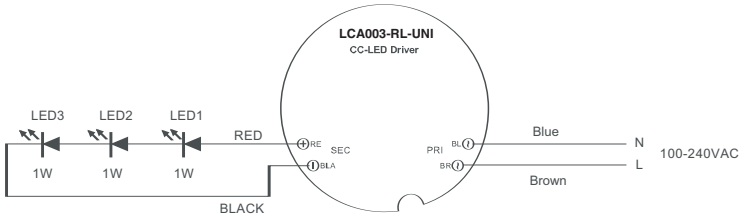


## DIMENSIONS

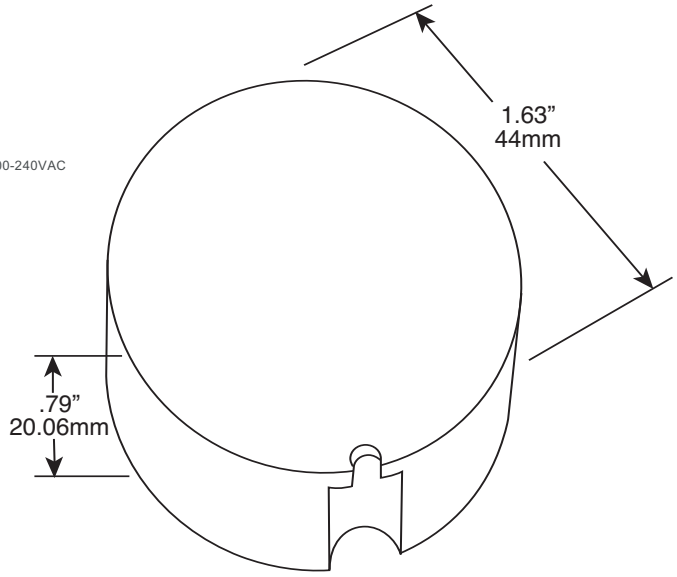


## LED TYPE

High power LED 1W x1-3
1.2W x 1-3

| | | |
|---|---|---|
| Terminals | : | Hard Wires : PRI : Blue/Brown155mm |
| | | SEC : Red/Black 200mm |
| Case Material | : | Polycarbonate / Potted |
| RoHS Compliant | : | Yes |
| UL1310 Compliant | : | Yes |
| Indoor Use | : | Low Humidity / No Condensation |

*Regulatory Approvals*

CE c UL us

hatch LED DRIVERS

08/09

# LED DRIVERS

## LCA006Q-UNI

**CONSTANT CURRENT**

**6 WATT 350mA**

## ELECTRONIC SPECIFICATIONS

| | |
|---|---|
| Input Voltage Range | 90-264VAC |
| Input Frequency | 50/60Hz |
| Output Power | 1-6W |
| Input Current | 65mA@230VAC |
| Output Voltage | 2-19.0VDC |
| Output Current | 350mA |
| Power Factor | 0.55 |
| Ambient Temp. | -20°-+50°C |
| Case Temp. (Tc) | +90°C |
| Class 2 | Yes |

## WIRING DIAGRAM

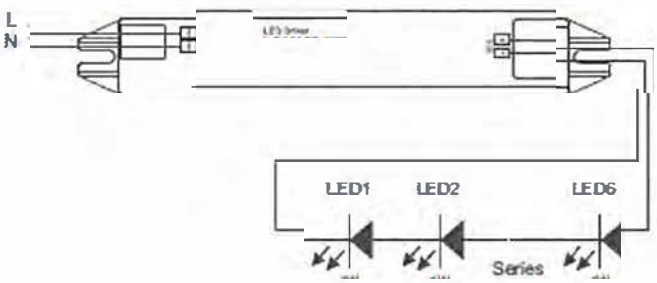


## DIMENSIONS

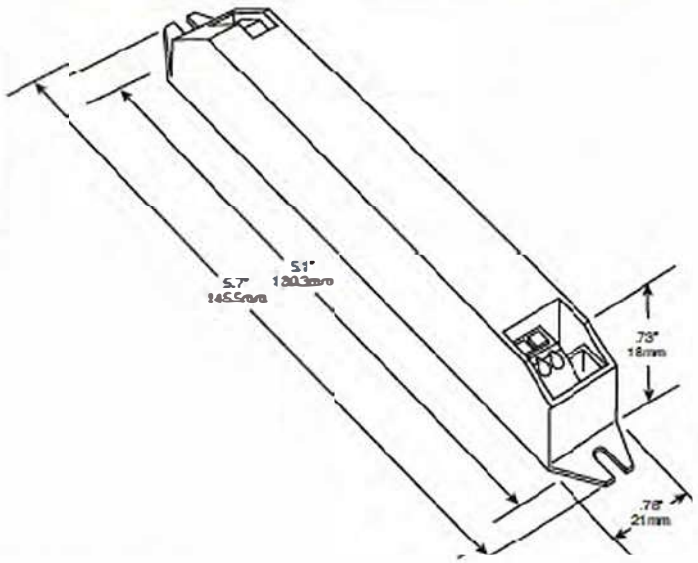


## LED TYPE

1W x 1-6
1.155W x 1-6

| | | |
|---|---|---|
| Terminals | : | Input: Push Button<br>Output: Quick Connector / Push Button |
| Case Material | : | Polycarbonate |
| RoHS Compliant | : | Yes |
| UL1310 Compliant | : | Yes |
| Indoor Use | : | Low Humidity / No Condensation |

Regulatory Approvals

CE c UL us

LED DRIVERS

# hatch LED DRIVERS

# LCA012-L-UNI

## CONSTANT CURRENT

## 12 WATT 350mA

## ELECTRONIC SPECIFICATIONS

| | |
|---|---|
| Input Voltage Range | 90-264VAC |
| Input Frequency | 50/60Hz |
| Output Power | .7-13.9W |
| Input Current | 70mA@230VAC |
| Output Voltage | 3-36VDC |
| Output Current | 350mA |
| Power Factor | 0.95 |
| Ambient Temp. | -20°-+50°C |
| Case Temp. (Tc) | +90°C |
| Class 2. | Yes |

## WIRING DIAGRAM

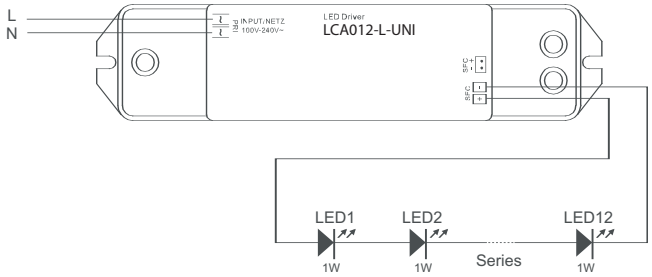


## DIMENSIONS

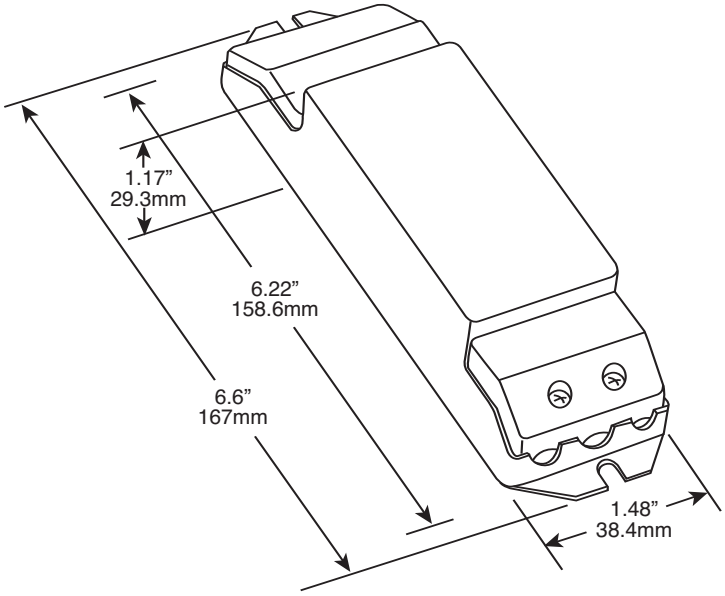


## LED TYPE

High Power LED 1W x 1-12

1.155W x 1-12

| | | |
|---|---|---|
| Terminals | : | Screw Terminal / Quick Connect |
| Case Material | : | Polycarbonate |
| RoHS Compliant | : | Yes |
| UL1310 Compliant | : | Yes |
| Indoor Use | : | Low Humidity / No Condensation |

Regulatory Approvals

CE c UL us

hatch LED DRIVERS

08/09

# hatch LED DRIVERS

# LCB004-UNI

## CONSTANT CURRENT

## 4 WATT 700mA

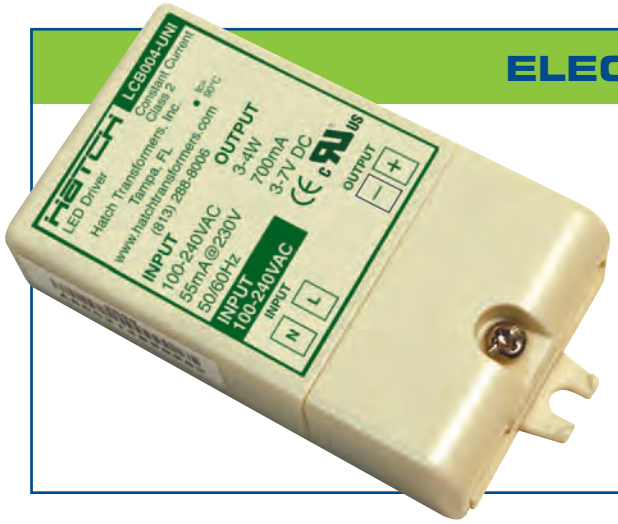


## ELECTRONIC SPECIFICATIONS

| | |
|---|---|
| Input Voltage Range | 90-264VAC |
| Input Frequency | 50/60Hz |
| Output Power | 3-4W |
| Input Current | 55mA@230VAC |
| Output Voltage | 4-7VDC |
| Output Current | 700mA |
| Power Factor | 0.55 |
| Ambient Temp. | -20°-+50°C |
| Case Temp. (Tc) | +90°C |
| Class 2 | Yes |

## WIRING DIAGRAM

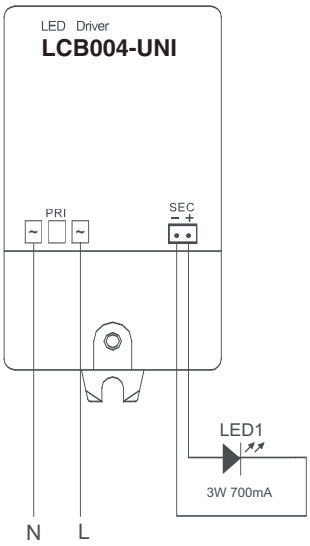


## DIMENSIONS

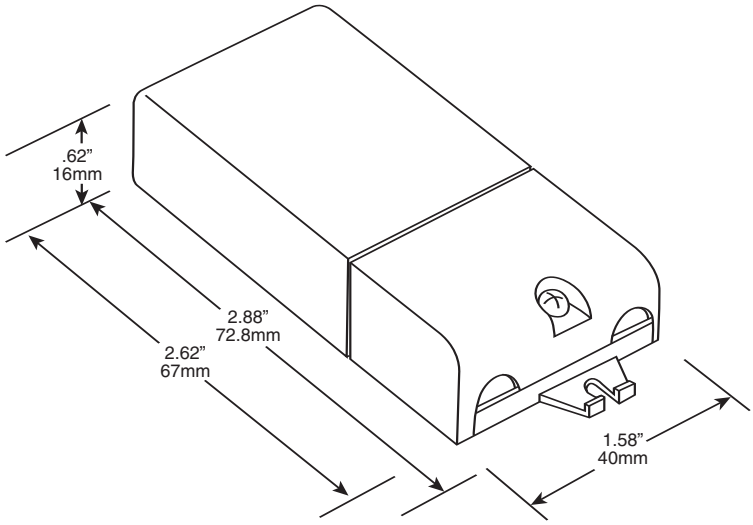


## LED TYPE

High Power LED 3W x 1

| | | |
|---|---|---|
| Terminals | : | Input : Screw Terminal |
| | | Output : Quick Connect |
| Case Material | : | Polycarbonate |
| RoHS Compliant | : | Yes |
| UL1310 Compliant | : | Yes |
| Indoor Use | : | Low Humidity / No Condensation |

Regulatory Approvals

CE c UL us

hatch LED DRIVERS

08/09

# LED DRIVERS

# LCB006-RL-UNI

## CONSTANT CURRENT

6 WATT 700mA

## ELECTRONIC SPECIFICATIONS

| | |
|---|---|
| Input Voltage Range | 90-264VAC |
| Input Frequency | 50/60Hz |
| Output Power | 3-6W |
| Input Current | 110mA@120VAC |
| Output Voltage | 4-10VDC |
| Output Current | 700mA |
| Power Factor | 0.40 |
| Ambient Temp. | -20˚-+50˚C |
| Case Temp. (Tc) | +75˚C |
| Class 2 | Yes |

## WIRING DIAGRAM

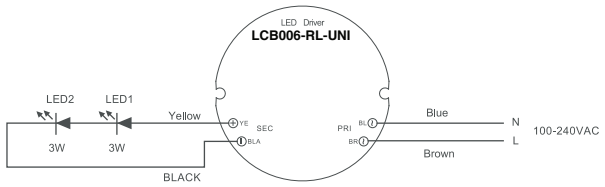


## DIMENSIONS

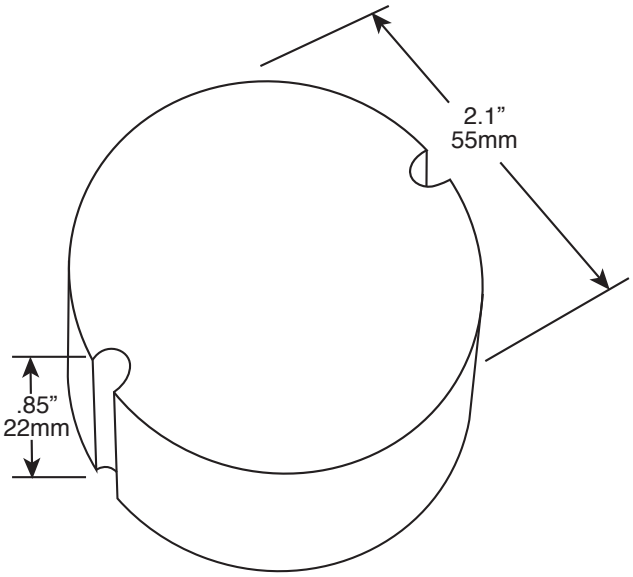


## LED TYPE

High power LED 3W x 1-2
5W x 1

| | | |
|---|---|---|
| Terminals | : | Hard Wires : PRI : White / Black 155mm |
| | | SEC : Yellow / Black 200mm |
| Case Material | : | Polycarbonate / Potted |
| RoHS Compliant | : | Yes |
| UL1310 Compliant | : | Yes |
| Indoor Use | : | Low Humidity / No Condensation |

*Regulatory Approvals*

LED DRIVERS

# LED DRIVERS

# LCB006-UNI

## CONSTANT CURRENT

## 6 WATT 700mA

## ELECTRONIC SPECIFICATIONS

| | |
|---|---|
| Input Voltage Range | 90-264VAC |
| Input Frequency | 50/60Hz |
| Output Power | 3-6W |
| Input Current | 110mA@230VAC |
| Output Voltage | 4-10VDC |
| Output Current | 700mA |
| Power Factor | 0.55 |
| Ambient Temp. | -20°-+50°C |
| Case Temp. (Tc) | +90°C |
| Class 2 | Yes |

## WIRING DIAGRAM

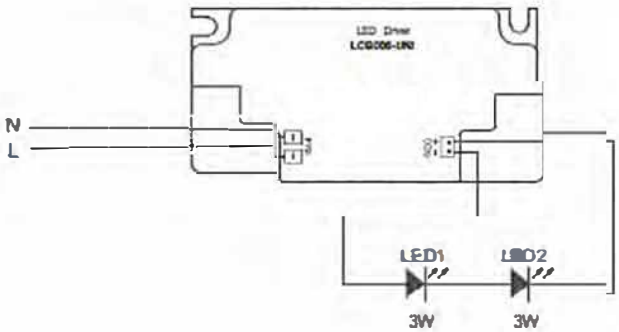


## DIMENSIONS

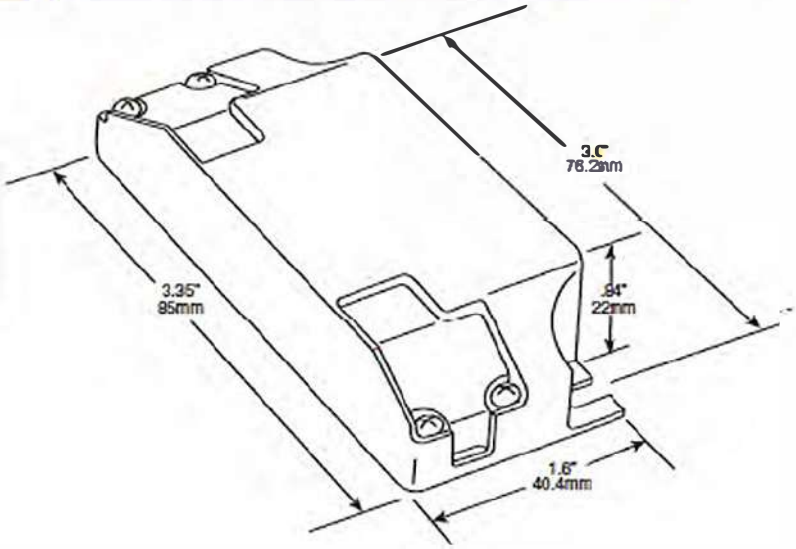


## LED TYPE

High Power LED 3W x 1-2
5W x 1

| | | |
|---|---|---|
| Terminals | : | Input: Screws Terminal<br>Output: Quick Connect |
| Case Material | : | Polycarbonate |
| RoHS Compliant | : | Yes |
| UL1310 Compliant | : | Yes |
| Indoor Use | : | Low Humidity / No Condensation |

Regulatory Approvals

CE c UL us

LED DRIVERS

# hatch LED DRIVERS

# LCB009-RL-UNI

## CONSTANT CURRENT

## 9 WATT 700mA

## ELECTRONIC SPECIFICATIONS

| | |
|---|---|
| Input Voltage Range | 90-264VAC |
| Input Frequency | 50/60Hz |
| Output Power | 3-6W |
| Input Current | 110mA@230VAC |
| Output Voltage | 3-13.4VDC |
| Output Current | 700mA |
| Power Factor | 0.55 |
| Ambient Temp. | -20°-+50°C |
| Case Temp. (Tc) | +90°C |
| Class 2 | Yes |

## WIRING DIAGRAM

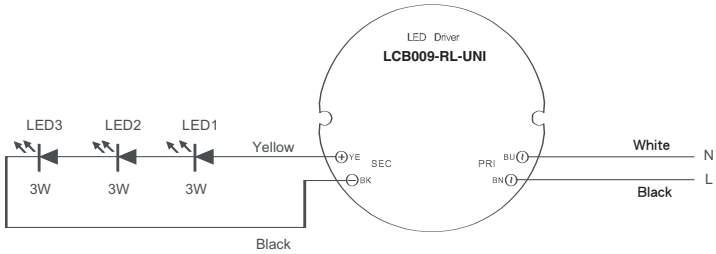


## DIMENSIONS

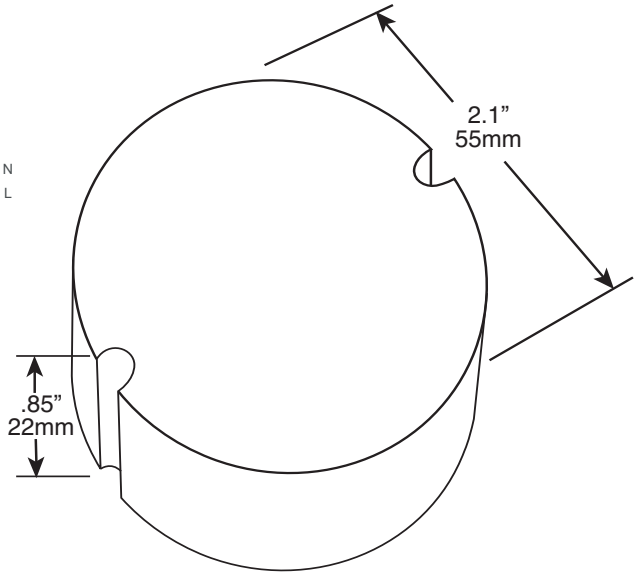


## LED TYPE

| | |
|---|---|
| High power LED | 3W x 1-3 |
| | 5W x 1 |

| | | |
|---|---|---|
| Terminals | : | Hard Wires : PRI : White / Black 149mm |
| | | SEC : Yellow / Black 190mm |
| Case Material | : | Polycarbonate / Potted |
| RoHS Compliant | : | Yes |
| UL1310 Compliant | : | Yes |
| Indoor Use | : | Low Humidity / No Condensation |

*Regulatory Approvals*

CE c UL us

hatch LED DRIVERS

09/09

# hatch LED DRIVERS

# LCB012-L-UNI

## CONSTANT CURRENT

## 12 WATT 700mA

## ELECTRONIC SPECIFICATIONS

| | |
|---|---|
| Input Voltage Range | 90-264VAC |
| Input Frequency | 50/60Hz |
| Output Power | 3-12W |
| Input Current | 70mA@230VAC |
| Output Voltage | 4-18VDC |
| Output Current | 700mA |
| Power Factor | 0.95 |
| Ambient Temp. | -20°-+50°C |
| Case Temp. (Tc) | +90°C |
| Class 2. | Yes |

## WIRING DIAGRAM

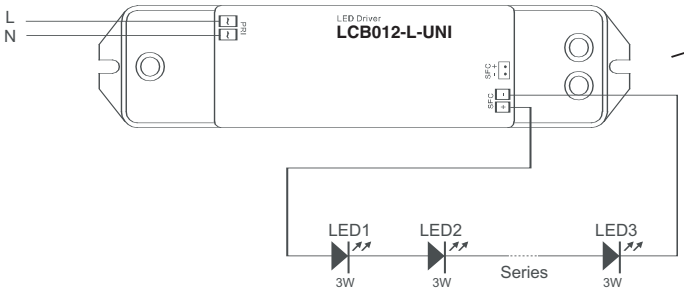


## DIMENSIONS

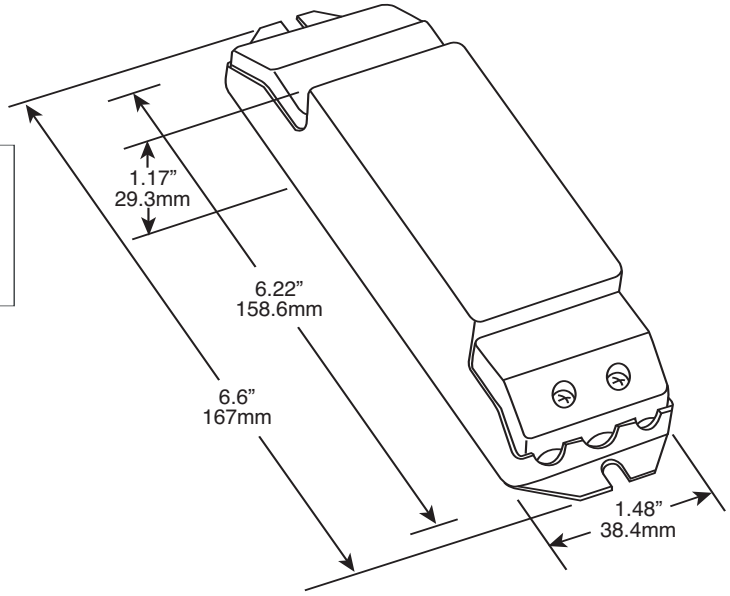


## LED TYPE

| | |
|---|---|
| High Power LED | 3W x 1-4 |
| | 5W x 1-2 |

| | | |
|---|---|---|
| Terminals | : | Screw Terminal |
| Case Material | : | Polycarbonate |
| RoHS Compliant | : | Yes |
| UL1310 Compliant | : | Yes |
| Indoor Use | : | Low Humidity / No Condensation |

*Regulatory Approvals*

CE c UL us

hatch LED DRIVERS

09/09

# LED DRIVERS

# LCB018-UNI

## CONSTANT CURRENT

## 18WATT 700mA

## ELECTRONIC SPECIFICATIONS

| | |
|---|---|
| Input Voltage Range | 90-264VAC |
| Input Frequency | 50/60Hz |
| Output Power | 3-18W |
| Input Current | 100mA@230VAC |
| Output Voltage | 3-27VDC |
| Output Current | 700mA |
| Power Factor | 0.95 |
| Ambient Temp. | -20°-+50°C |
| Case Temp. (Tc) | +90°C |
| Class 2 | Yes |
| SELV | Yes |

## WIRING DIAGRAM

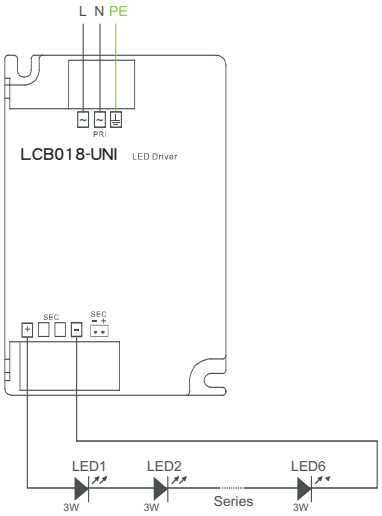


## DIMENSIONS

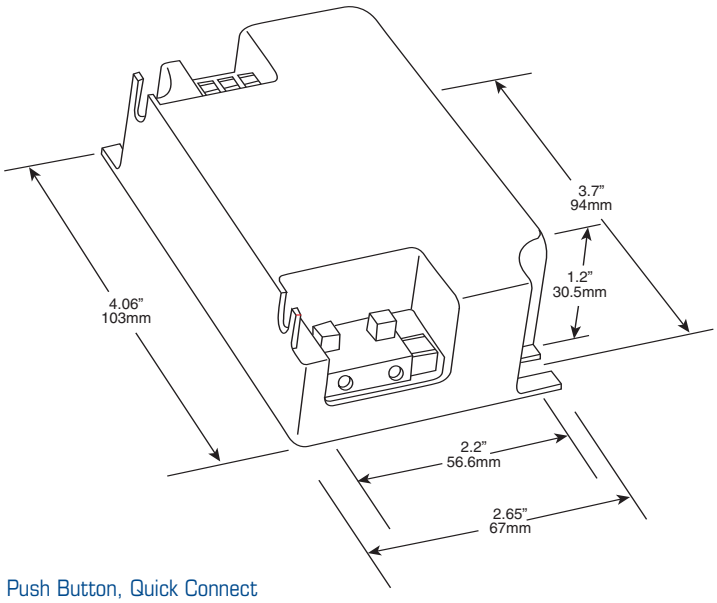


## LED TYPE

High Power LED 3W x 1-6
5W x 1-3

| | | |
|---|---|---|
| Terminals | : | Push Button, Quick Connect |
| Case Material | : | Polycarbonate |
| RoHS Compliant | : | Yes |
| UL1310 Compliant | : | Yes |
| Indoor Use | : | Low Humidity / No Condensation |

Regulatory Approvals

CE c UL us

LED DRIVERS

09/09

# 16W | Constant Current Case Style XMC

## GENERAL INFORMATION

| | |
|---|---|
| **LED Driver Type** | Constant Current (Class 2) |
| **Maximum Wattage** | 16 Watts |
| **Input Voltage** | 120 - 277 VAC ± 10% Universal |
| **Input Frequency** | 50/60Hz |
| **Total Harmonic Distortion** | <20% |

## CASE STYLE XMC: POLYCARBONATE

## ELECTRICAL SPECIFICATIONS

| Watts | Rated Current | Output Voltage | Dimming Type | Input Voltage | Hatch Part Number |
|---|---|---|---|---|---|
| **Dimming Models** | | | | | |
| 16W | 500mA | 18 - 32.5 VDC | Reverse Phase Dimming | 120 - 277 VAC | XMC16-0500R-UNV-A |

## PRODUCT FEATURES

- Short circuit and overload protection
- Over temperature protection
- Suitable for dry and damp locations
- Operating temperature range: -30°C to 50°C
- Surge voltage rating: L-N 2.4kV
- ELV Dimming at 120V only

## APPROVALS

- UL 8750 recognized component
- EN61000-3-2
- EMC: Meets FCC47 CFR Part 15 (Class A) consumer limits

## WARRANTY

- 5 year limited warranty

## MECHANICAL SPECIFICATIONS: CASE STYLE XMC

## WIRING INFORMATION

| | |
|---|---|
| Input: | 6”, Black (L), White (N) #18AWG |
| Output: | 6”, Red (+), Black (-) #18AWG |

## PACKAGING INFORMATION

| | |
|---|---|
| Weight: | 3.46 oz |
| Quantity: | 100pc/carton |

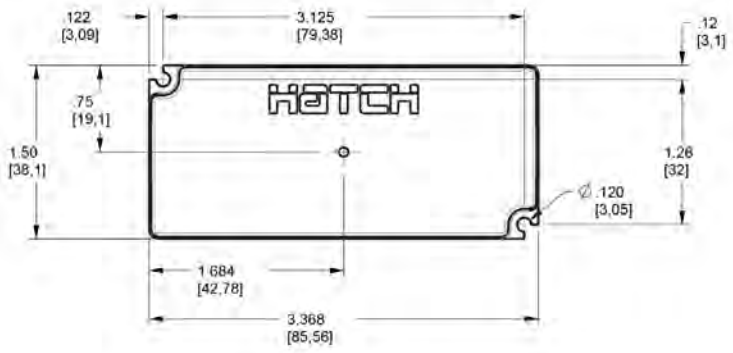

**32W CONSTANT CURRENT DIMMABLE**

**Part No.**

# XRC32-0700Z-UNV-B

| | |
|---|---|
| **LED Driver Type** | Constant Current |
| **Input Voltage** | 120-277VAC Nominal, 50/60Hz |
| **Dimming** | 0-10V Dimmable |

**XSERIES LED DRIVERS**

## ELECTRICAL SPECIFICATIONS

| | |
|---|---|
| **INPUT** | |
| **Max. Current** | 291mA @ 120V, 126mA @ 277V |
| **Power Factor** | > 0.9 |
| **Efficiency** | > 84% |
| **OUTPUT** | |
| **Max. Power** | 32W |
| **Current** | 700mA |
| **Voltage** | 24-46V |
| **Max. Case Temp.** | 85°C |
| **Auxillary Output** | 12 Volts ± 10% |

**HATCH LED drivers provide maximum power in minimum sizes.**

For maximum performance and life, firmly attach bottom of unit to a proper heatsink.

### FEATURES:

- Short Circuit Overload & Open Load Protection
- Over Voltage & Over Current Protection - Auto Recovery
- Surge Protection
- 0-10V Dimmable
- Lifetime 50,000 hrs @ 80°C
- Case Material: Metal
- Class 2

### APPLICATIONS:

- Track Lighting
- Recessed Lighting
- General Illumination
- Commercial Lighting
- Architectural Lighting

### APPROVALS:

**CERTIFICATIONS**

RoHS COMPLIANT

c UL us E341915

FC

### LIMITED WARRANTY:

**5 years**

### PHYSICAL DIMENSIONS:

-Length (L): 3.96"
-Width (W): 1.86"
-Height (H): 1.30"

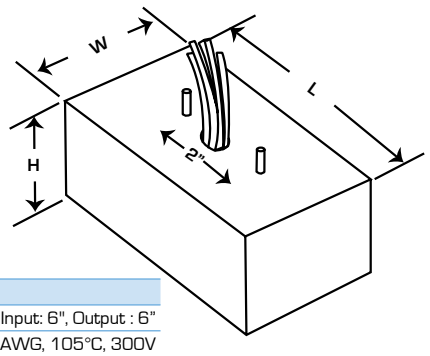


| Wiring Information | |
|---|---|
| Lead Length : | Input: 6", Output : 6" |
| Wire Type : | Input: 18AWG, 105°C, 300V |

Always confirm fit with a physical sample

### WIRING DIAGRAM:

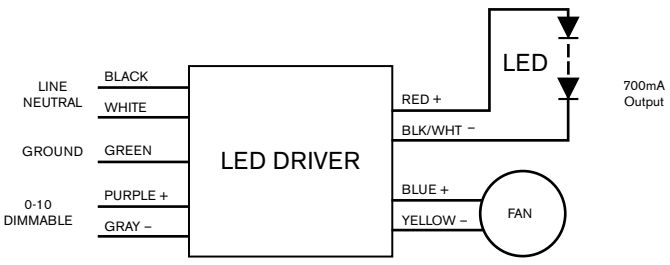


**WARNING**: Always connect LED load prior to energizing driver.

### $T_C$ POINT LOCATION:

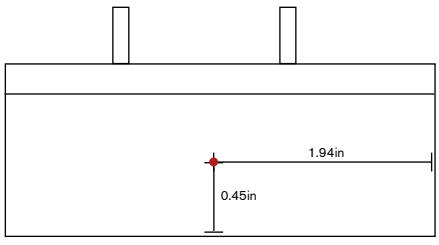


Specifications subject to change without notice.

# XTC21-32
## CONSTANT CURRENT

| | |
|---|---|
| **LED Driver Type** | Constant Current |
| **Input Voltage** | 120-277VAC Nominal, 50/60Hz |
| **Dimming** | Leading & Trailing Edge Dimming @ 120VAC |

Hatch "X" Series Phase Dimmable LED Driver products are suitable for use with most Incandescent (Leading Edge) and Electronic Low Voltage (Trailing Edge) dimmer products. Note: It is also recommended that the dimmer manufacturer confirm what dimmer products are suitable for use with LED applications.

XSERIES LED DRIVERS

## PART NUMBER SELECTION

| PART NO. SELECTION: XTCaa - bbbbc - UNV- A | |
|---|---|
| **aa** | Wattage: 21-32W (see below) |
| **bbbb** | Current: 0450mA - 0700mA (see below) |
| **c** | Dimming: (P) Leading & Trailing Edge Dimming |

**SELECT THE CURRENT THAT WORKS BEST FOR YOU.**

| Wattage (aa) | Current (bbbb) |
|---|---|
| **32** | 0686 - 0700 |
| **31** | 0666 - 0685 |
| **30** | 0641 - 0665 |
| **29** | 0621 - 0640 |
| **28** | 0596 - 0620 |
| **27** | 0576 - 0595 |
| **26** | 0556 - 0575 |
| **25** | 0536 - 0555 |
| **24** | 0511 - 0535 |
| **23** | 0491 -0510 |
| **22** | 0466 - 0490 |
| **21** | 0450 - 0465 |

**Example Part Number (32W, 700mA, Phase Dimming):**

**XTC32-0700P-UNV-A**

## ELECTRICAL SPECIFICATIONS

| INPUT | |
|---|---|
| **Power Factor** | > 0.95 |
| **THD** | < 20% |
| **OUTPUT** | |
| **Max. Power** | 32W |
| **Current** | 450mA -700mA |
| **Voltage Range** | 21-46V |
| **Max. Case Temp.** | 85°C |

## PHYSICAL DIMENSIONS:

-Length (L): 3.79"
-Width (W): 1.62"
-Height (H): 1.02"

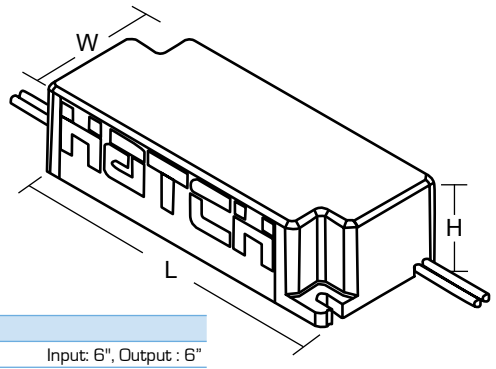


| Wiring Information | |
|---|---|
| Lead Length : | Input: 6", Output : 6" |
| Wire Type : | Input: 18AWG, 105°C, 300V |

Always confirm fit with a physical sample

## FEATURES:

- Short Circuit Overload & Open Load Protection
- Over Voltage & Over Current Protection - Auto Recovery
- Leading & Trailing Edge Dimmable at 120V Only
- Lifetime 50,000 hrs @ 80°C Case Temp.
- Case Material: Polycarbonate
- Class 2
- Surge Protection
- Complies with IEEE C62.41-1991, Class A operation. Seven strikes of a 100 kHz ring wave, 2.5kV level, for both common and differential mode.

## APPLICATIONS:

- Track Lighting
- Recessed Lighting
- General Illumination
- Commercial Lighting
- Architectural Lighting

## APPROVALS:

### CERTIFICATIONS

RoHS COMPLIANT

c UL us E341915

FC

## LIMITED WARRANTY:

**5 years**

## $T_C$ POINT LOCATION:

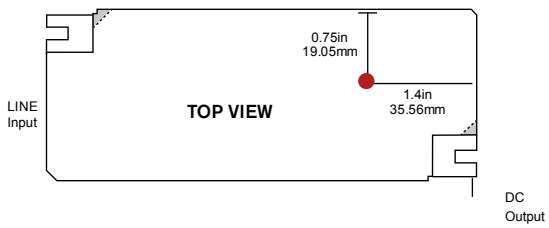


HATCH LED drivers provide maximum power in minimum sizes.
For maximum performance and life, firmly attach bottom of unit to a proper heatsink.



REV: 012616

| | |
|---|---|
| **LED Driver Type** | Constant Current |
| **Input Voltage** | 120-277VAC Nominal, 50/60Hz |
| **Dimming** | Leading & Trailing Edge Dimming @ 120VAC |

Hatch "X" Series Phase Dimmable LED Driver products are suitable for use with most Incandescent (Leading Edge) and Electronic Low Voltage (Trailing Edge) dimmer products. Note: It is also recommended that the dimmer manufacturer confirm what dimmer products are suitable for use with LED applications.

XSERIES LEDDRIVERS

## EFFICIENCY

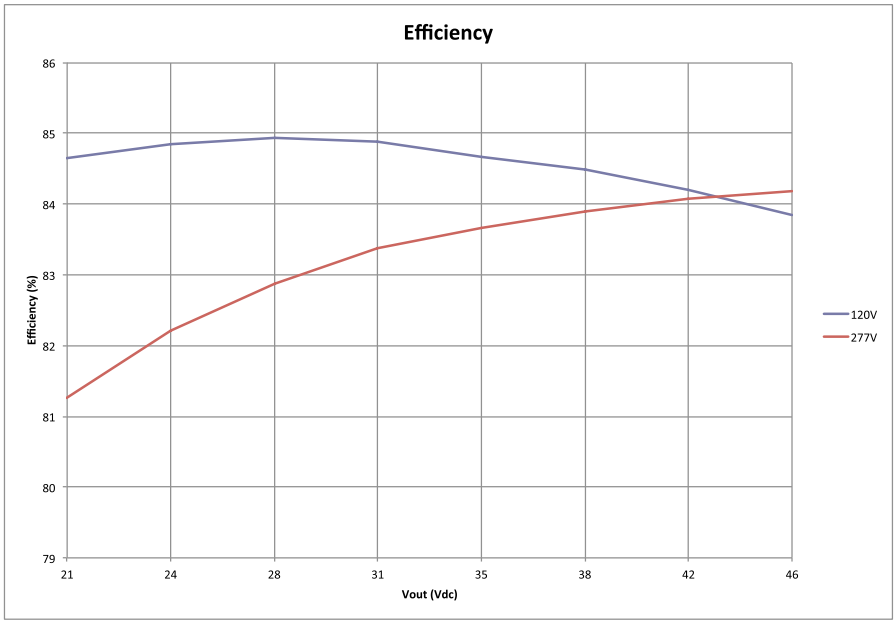


700mA

## DIMMING CURVE

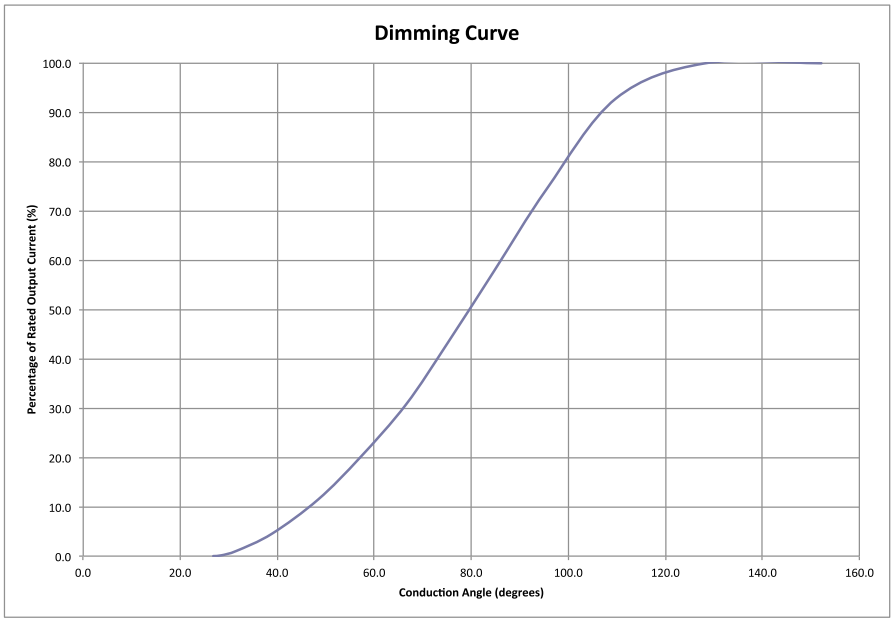


700mA

| | |
|---|---|
| **LED Driver Type** | Constant Current |
| **Input Voltage** | 120-277VAC Nominal, 50/60Hz |
| **Dimming** | Leading & Trailing Edge Dimming @ 120VAC |

Hatch "X" Series Phase Dimmable LED Driver products are suitable for use with most Incandescent (Leading Edge) and Electronic Low Voltage (Trailing Edge) dimmer products. Note: It is also recommended that the dimmer manufacturer confirm what dimmer products are suitable for use with LED applications.

## POWER FACTOR

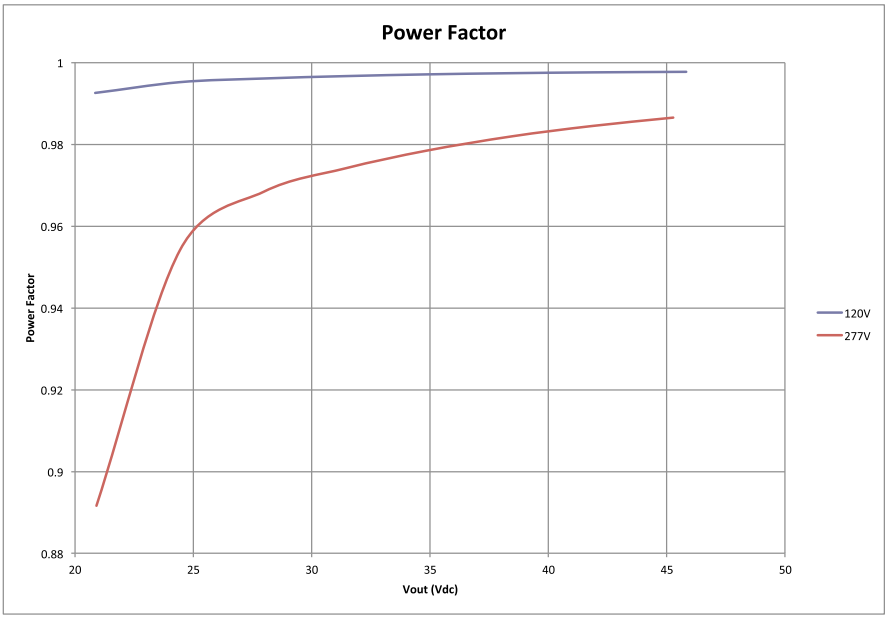


700mA

## THD

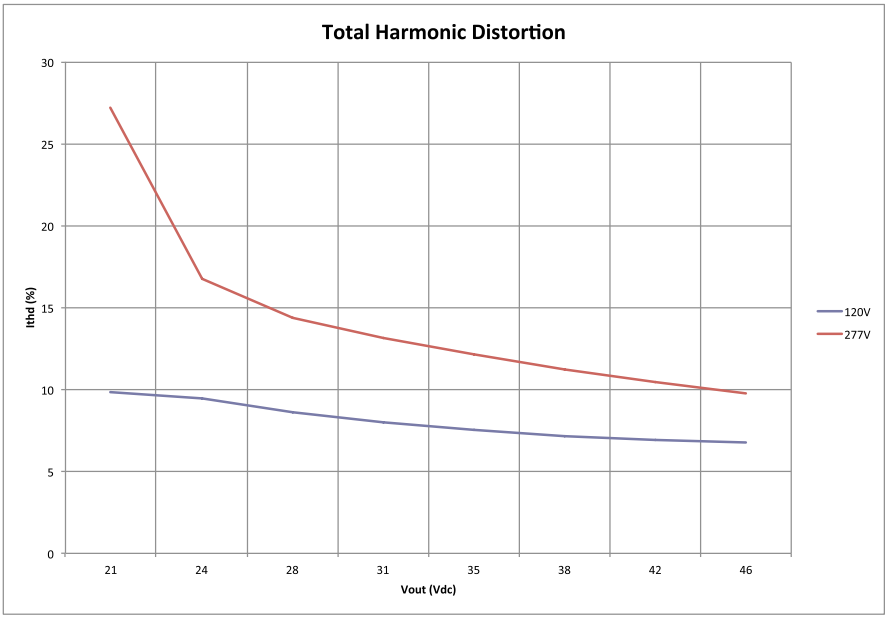


700mA

# LV003W-24-UNI

## CONSTANT VOLTAGE

## 3 WATT 24V

## ELECTRONIC SPECIFICATIONS

| | |
|---|---|
| Input Voltage Range | 90-264VAC |
| Input Frequency | 50/60Hz |
| Output Power | 3W |
| Input Current | 90mA@230VAC |
| Output Voltage | 24VDC |
| Output Current | 125mA |
| Power Factor | 0.55 |
| Ambient Temp. | -20°-+50°C |
| Case Temp. (Tc) | +90°C |

## WIRING DIAGRAM

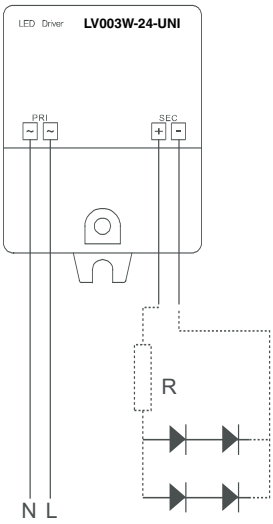


## DIMENSIONS

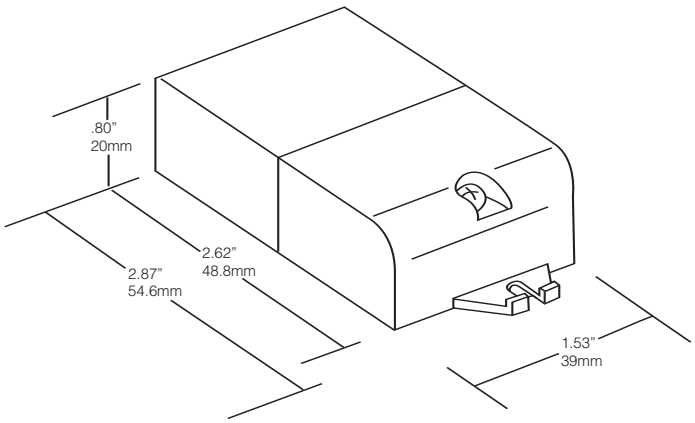


## LED TYPE

.04 ~ .1W

| | | |
|---|---|---|
| Terminals | : | Quick Connect |
| Case Material | : | Polycarbonate |
| RoHS Compliant | : | Yes |
| UL1310 Compliant | : | Yes |
| Indoor Use | : | Low Humidity / No Condensation |

Regulatory Approvals

CE c UL us

LED DRIVERS

08/09

# 4W | Constant Voltage

## GENERAL INFORMATION

| | |
|---|---|
| **LED Driver Type** | Constant Voltage (Class 2) |
| **Maximum Wattage** | 4 Watts |
| **Input Voltage** | 120 - 277 VAC ± 10% Universal |
| **Input Frequency** | 50/60Hz |

## CASE STYLE: POLYCARBONATE

## ELECTRICAL SPECIFICATIONS

| Watts | Output Voltage | Max Output Current | Input Voltage | Input Current | Power Factor | Efficiency | Hatch Part Number |
|---|---|---|---|---|---|---|---|
| 4W | 12 VDC | 0.33A | 120 - 277 VAC | 0.12/0.06A | >0.40 | 70% | LV004W-12-UNV |

## PRODUCT FEATURES

- Short circuit and overload protection
- Over temperature protection
- Suitable for dry and damp locations
- Withstanding voltage: I/P – O/P 2kVAC
- Surge voltage rating: L-N 2kV
- Operating temperature range: -20°C to 85°C (measured at Tcase)

## APPROVALS

- UL 8750 recognized component
- EN61000-3-2
- EMC: Meets FCC47 CFR Part 15 (Class A) Non-consumer limits

## MECHANICAL SPECIFICATIONS

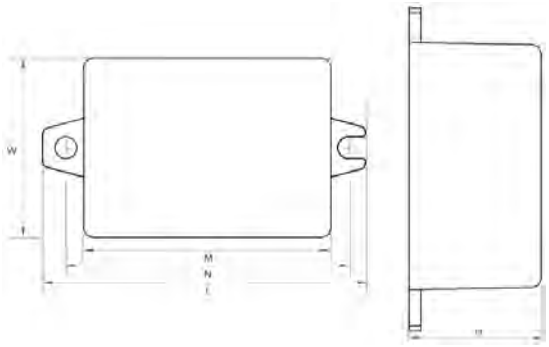

### DIMENSIONS

| | in [mm] |
|---|---|
| Length: | 1.93 [49] |
| Width: | 1.07 [27.2] |
| Mounting (M): | 1.48 [37.5] |
| Mounting (N): | 1.69 [42.9] |
| Height: | 0.79 [20] |

### WIRING INFORMATION

| | |
|---|---|
| Input: | 12”, Black (L), White (N) #20AWG |
| Output: | 12”, Red (+), Black (-) #22AWG |

### PACKAGING INFORMATION

| | |
|---|---|
| Weight: | 4.1oz |
| Quantity: | 160pc/carton |

## WARRANTY

- 5 year limited warranty

# hatch LED DRIVERS

# LV006W-12-UNI

## CONSTANT VOLTAGE

## 6 WATT 12V

## ELECTRONIC SPECIFICATIONS

| | |
|---|---|
| Input Voltage Range | 90-264VAC |
| Input Frequency | 50/60Hz |
| Output Power | 6W |
| Input Current | 65mA@230VAC |
| Output Voltage | 12VDC |
| Output Current | 500mA |
| Power Factor | 0.55 |
| Ambient Temp. | -20°-+50°C |
| Case Temp. (Tc) | +90°C |
| SELV Equivalent | Yes |

## WIRING DIAGRAM

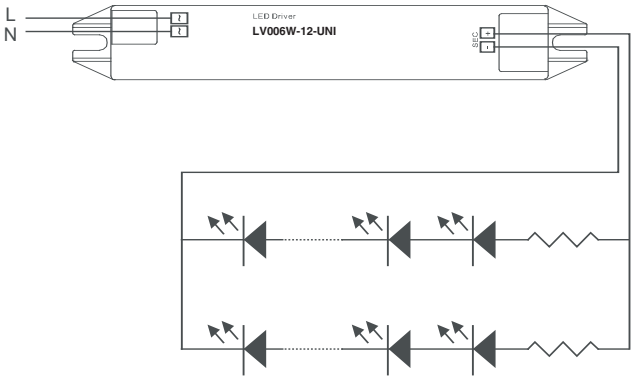


## DIMENSIONS

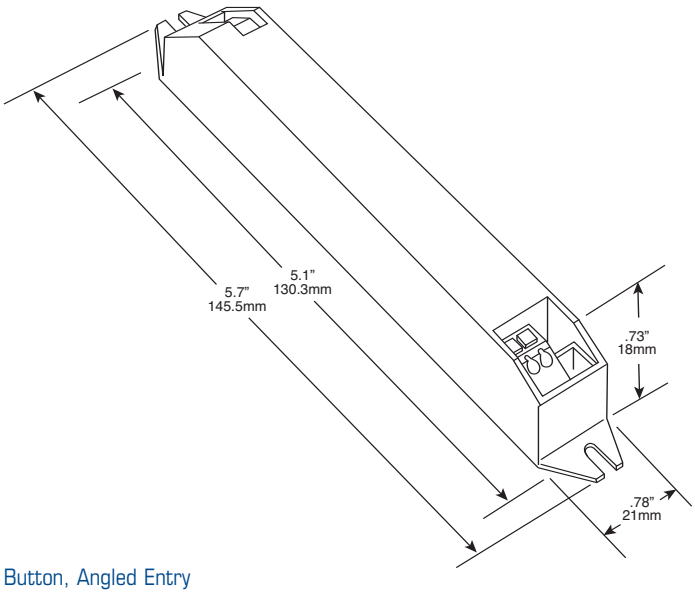


## LED TYPE

Regular LED 0.04-0.1W

| | | |
|---|---|---|
| Terminal Block | : | Push Button, Angled Entry |
| Case Material | : | Polycarbonate |
| RoHS Compliant | : | Yes |
| UL1310 Compliant | : | Yes |
| Indoor | : | Low Humidity / No Condensation |

Regulatory Approvals

hatch LED DRIVERS

08/09

# hatch LED DRIVERS

# LV006W-24-UNI

## CONSTANT VOLTAGE

## 6 WATT 24V

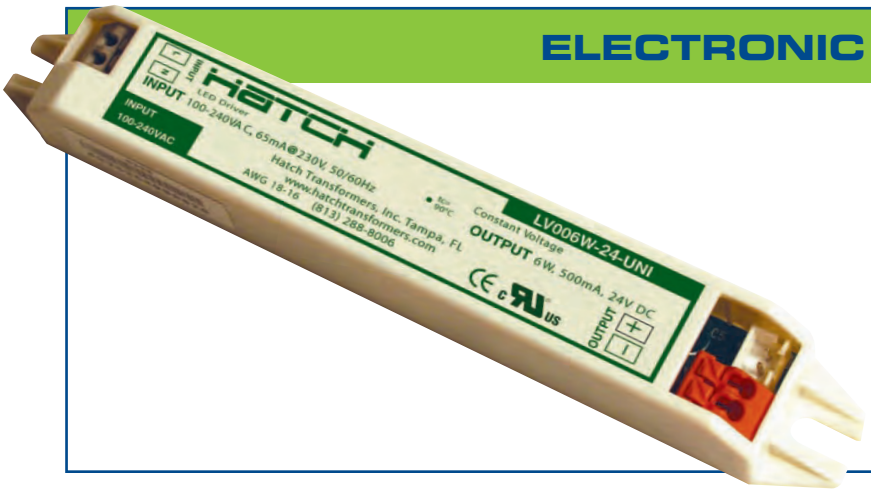


## ELECTRONIC SPECIFICATIONS

| | |
|---|---|
| Input Voltage Range | 90-264VAC |
| Input Frequency | 50/60Hz |
| Output Power | 6W |
| Input Current | 65mA@230VAC |
| Output Voltage | 24VDC |
| Output Current | 250mA |
| Power Factor | 0.55 |
| Ambient Temp. | -20°-+50°C |
| Case Temp. (Tc) | +90°C |
| SELV Equivalent | Yes |

## WIRING DIAGRAM

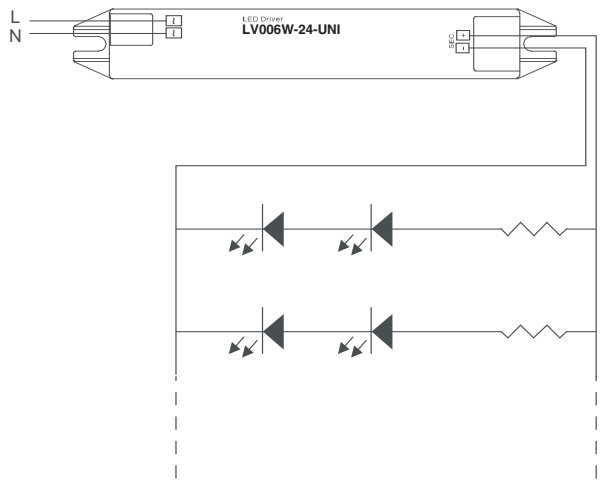


## DIMENSIONS

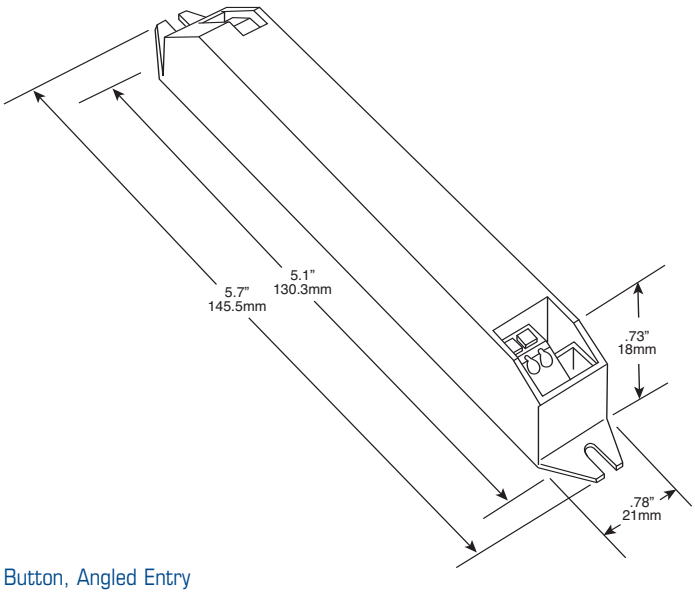


## LED TYPE

Regular LED 0.04-0.1W

| | | |
|---|---|---|
| Terminal Block | : | Push Button, Angled Entry |
| Case Material | : | Polycarbonate |
| RoHS Compliant | : | Yes |
| UL1310 Compliant | : | Yes |
| Indoor | : | Low Humidity / No Condensation |

Regulatory Approvals

hatch LED DRIVERS

# hatch LED DRIVERS

# LV010W-12-UNI

## CONSTANT VOLTAGE

## 10 WATT 12 VOLT

## ELECTRONIC SPECIFICATIONS

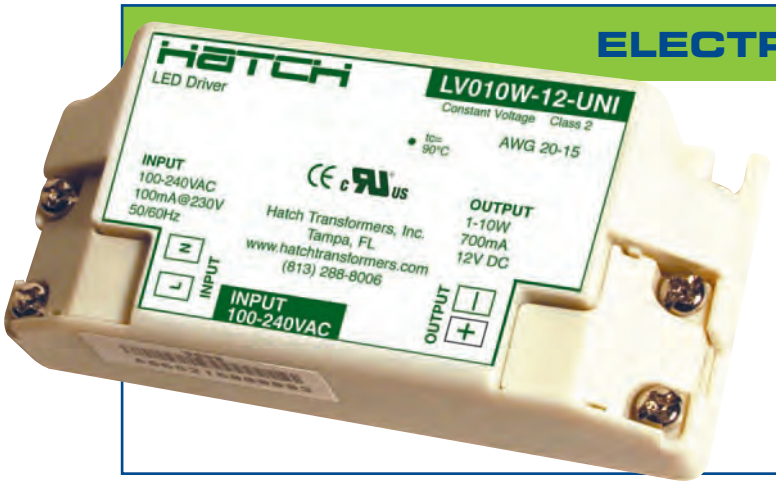


| | |
|---|---|
| Input Voltage Range | 90-264VAC |
| Input Frequency | 50/60Hz |
| Output Power | 1-10W |
| Input Current | 100mA@230VAC |
| Output Voltage | 11.88-12.12VDC |
| Output Current | 40-833mA |
| Power Factor | 0.55 |
| Ambient Temp. | -20°-+50°C |
| Case Temp. (Tc) | +90°C |
| Class 2 | Yes |

## WIRING DIAGRAM

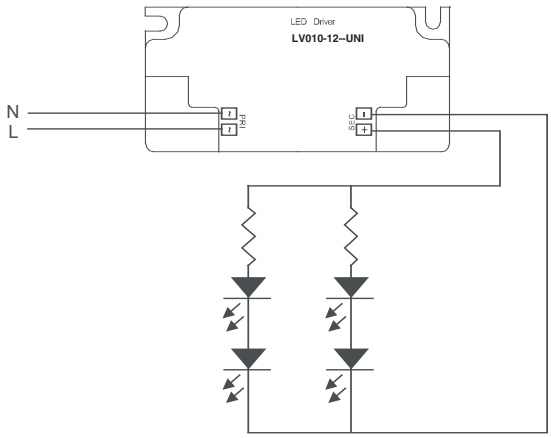


## DIMENSIONS

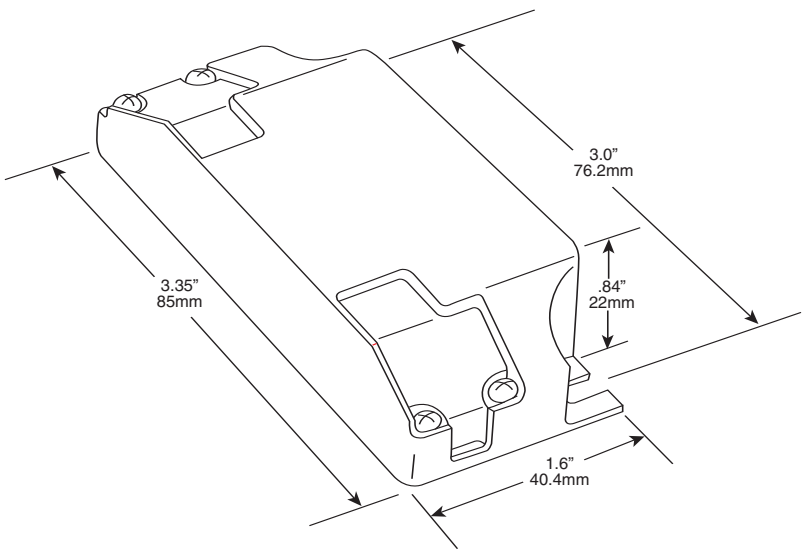


## LED TYPE

0.04-0.1W

| | | |
|---|---|---|
| Terminals | : | Screw Type Terminal |
| Case Material | : | Polycarbonate |
| RoHS Compliant | : | Yes |
| UL1310 Compliant | : | Yes |
| Indoor Use | : | Low Humidity / No Condensation |

Regulatory Approvals

hatch LED DRIVERS

08/09

# hatch LED DRIVERS

# LV010W-24-UNI

## CONSTANT VOLTAGE

## 10 WATT 24 VOLT

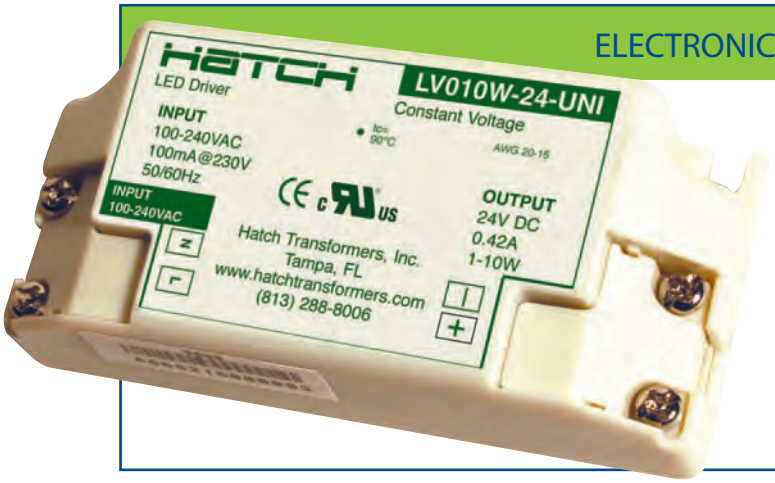


## ELECTRONIC SPECIFICATIONS

| | |
|---|---|
| Input Voltage Range | 90-264VAC |
| Input Frequency | 50/60Hz |
| Output Power | 1-10W |
| Input Current | 100mA@230VAC |
| Output Voltage | 23.76-24.24VDC |
| Output Current | 40-420mA |
| Power Factor | 0.55 |
| Ambient Temp. | -20˚-+50˚C |
| Case Temp. (Tc) | +90˚C |
| Class 2 | YES |

## WIRING DIAGRAM

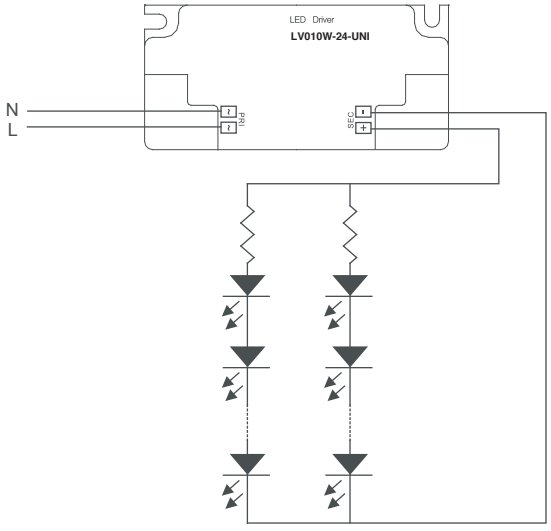


## DIMENSIONS

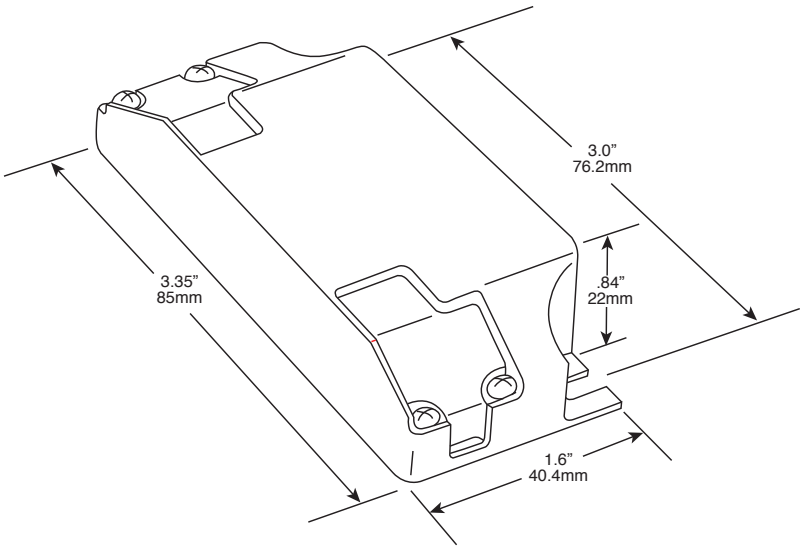


## LED TYPE

0.04-0.1W

| | | |
|---|---|---|
| Terminals | : | Screw Type Terminal |
| Case Material | : | Polycarbonate |
| RoHS Compliant | : | Yes |
| UL1310 Compliant | : | Yes |
| Indoor Use | : | Low Humidity / No Condensation |

Regulatory Approvals

hatch LED DRIVERS

07/09

# 10W | Constant Voltage Case Style A

## GENERAL INFORMATION

| | |
|---|---|
| **LED Driver Type** | Constant Voltage (Class 2) |
| **Maximum Wattage** | 10 Watts |
| **Input Voltage** | 120 VAC ± 10% Dedicated |
| **Input Frequency** | 50/60Hz |
| **Total Harmonic Distortion** | <20% |

## CASE STYLE A: POLYCARBONATE

## ELECTRICAL SPECIFICATIONS

| Watts | Output Voltage | Max Output Current | Input Voltage | Input Power | Input Current | Power Factor | Efficiency | Hatch Part Number |
|---|---|---|---|---|---|---|---|---|
| 10W | 12 VDC | 0.83A | 120 VAC | 13W | 0.22A | >0.50 | 80% | LV10-12N-120-A |
| | 24 VDC | 0.42A | 120 VAC | 13W | 0.22A | >0.50 | 80% | LV10-24N-120-A |

## PRODUCT FEATURES

- Short circuit and overload protection
- Suitable for dry and damp locations
- Withstanding voltage: I/P – O/P 2kVAC
- Operating temperature range: -40°C to 90°C (measured at Tcase)
- MTBF: 583,000 hours @ 40°C ambient (~70°C case temp)
- Inrush Current: <10A Max @120VAC, cold start 25°C

## APPROVALS

- UL 8750 recognized component
- EN61000-3-2
- EMC: Meets FCC47 CFR Part 15 (Class B) consumer limits

## MECHANICAL SPECIFICATIONS: CASE STYLE A

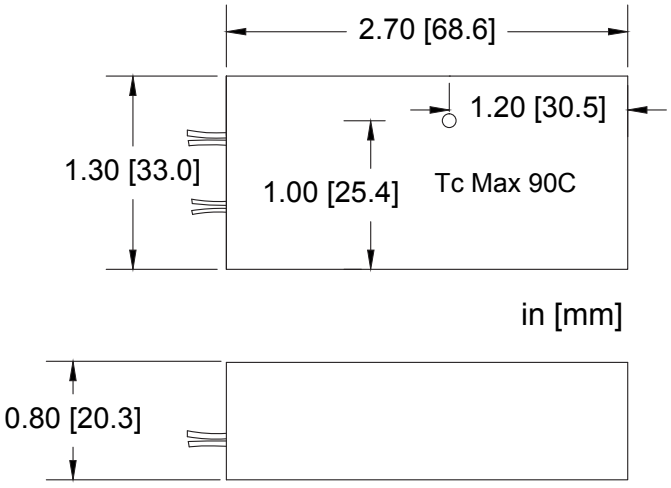


## DIMENSIONS [IN/MM]

| | |
|---|---|
| Length: | 2.70 [68.6] |
| Width: | 1.30 [33.0] |
| Height: | 0.80 [20.3] |

## WIRING INFORMATION

| | |
|---|---|
| Input: | 12”, Black (L), White (N) #18AWG |
| Output: | 12”, Red (+), Blue (-) #22AWG |

## PACKAGING INFORMATION

| | |
|---|---|
| Weight: | 3.5oz |
| Quantity: | 100pc/carton |

## WARRANTY

- 5 year limited warranty

# 10W Constant Voltage Case Style A

## GENERAL INFORMATION

| | |
|---|---|
| **LED Driver Type** | Constant Voltage (Class 2) |
| **Maximum Wattage** | 10 Watts |
| **Input Voltage** | 120 VAC ± 10% Dedicated |
| **Input Frequency** | 50/60Hz |
| **Total Harmonic Distortion** | <20% |

## CASE STYLE A: POLYCARBONATE

## PERFORMANCE CURVES

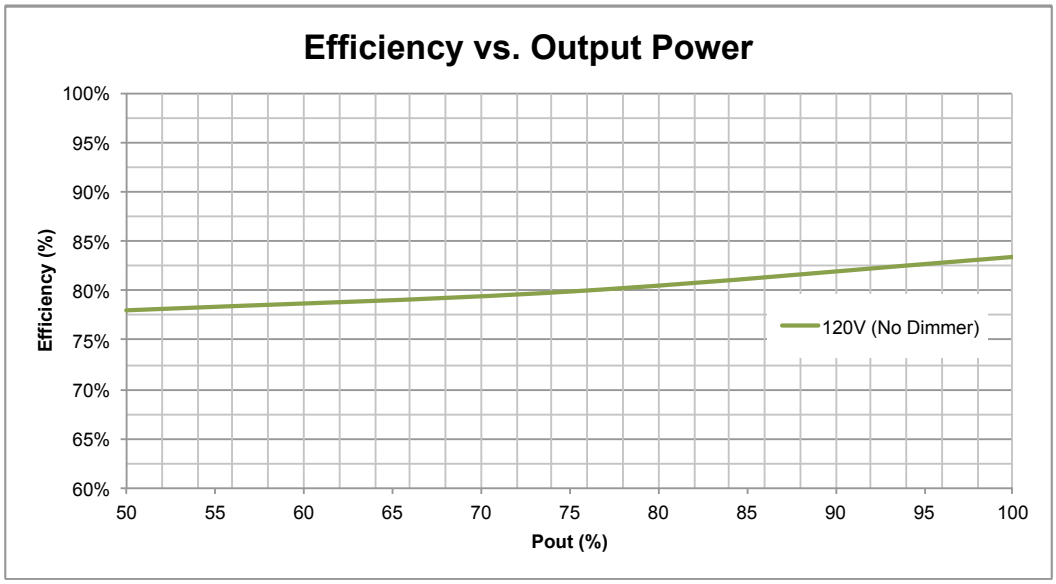


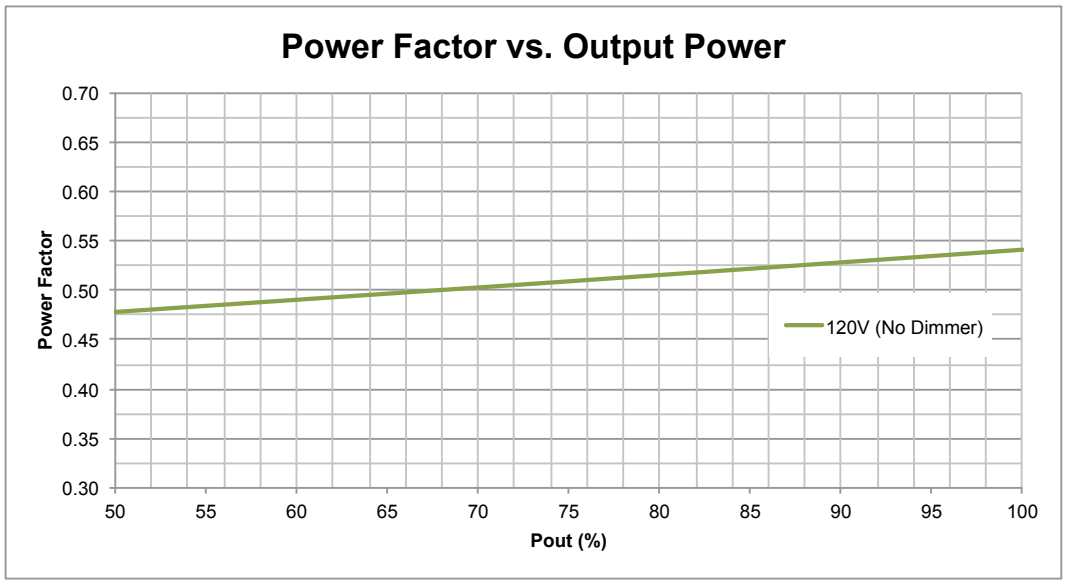


Efficiency and PF measured at 25°C.
Measurements made on model LV10-24N-120-A.

# 10W | Constant Voltage Case Style A

## GENERAL INFORMATION

| | |
|---|---|
| **LED Driver Type** | Constant Voltage (Class 2) |
| **Maximum Wattage** | 10 Watts |
| **Input Voltage** | 120 VAC ± 10% Dedicated |
| **Input Frequency** | 50/60Hz |
| **Total Harmonic Distortion** | <20% |

## CASE STYLE A: POLYCARBONATE

## PERFORMANCE CURVES

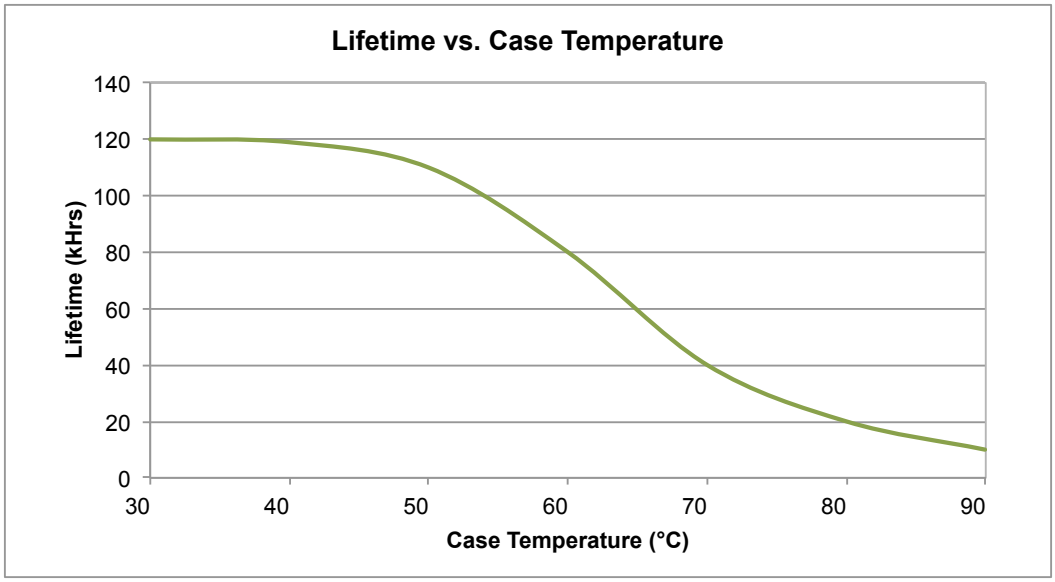


Efficiency and PF measured at 25°C.
Measurements made on model LV10-24N-120-A.

# 12W | Constant Voltage Case Style Y

## GENERAL INFORMATION

| | |
|---|---|
| **LED Driver Type** | Constant Voltage (Class 2) |
| **Maximum Wattage** | 12 Watts |
| **Input Voltage** | 120-277 VAC ± 10% Universal |
| **Input Frequency** | 50/60Hz |
| **Total Harmonic Distortion** | <20% |

## CASE STYLE Y: POLYCARBONATE

## ELECTRICAL SPECIFICATIONS

| Max Watts* | Output Voltage | Max Output Current | Input Voltage | Input Power | Input Current | Power Factor | Efficiency | Hatch Part Number |
|---|---|---|---|---|---|---|---|---|
| 12W | 12 VDC | 1.00A | 120 - 277 VAC | 16W | 0.18/0.08A | >0.90 | 75% | LV12-12N-UNV-Y |
| | 24 VDC | 0.50A | 120 - 277 VAC | 15W | 0.18/0.08A | >0.90 | 78% | LV12-24N-UNV-Y |

*Minimum Load 6W

## PRODUCT FEATURES

- Short circuit and overload protection
- Over temperature protection
- Suitable for dry, damp and wet locations
- Withstanding voltage: I/P – O/P 2kVAC
- Minimum start temp: -30°C
-MTBF: TBD

## APPROVALS

- UL 8750 recognized component
- EN61000-3-2
- EMC: Meets FCC47 CFR Part 15 (Class B) consumer limits
- IP65

## MECHANICAL SPECIFICATIONS: CASE STYLE Y

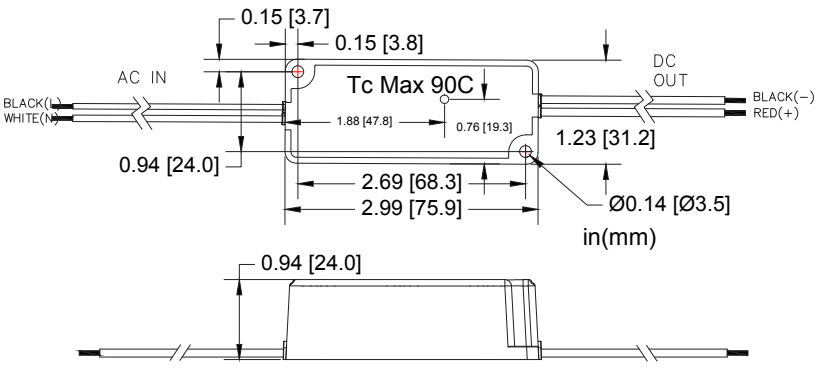


## DIMENSIONS [IN/MM]

| | |
|---|---|
| Length: | 2.69 [68.3] |
| Mounting: | 2.99 [75.9] |
| Width: | 0.94 [24.0] |
| Height: | 0.94 [24.0] |

## WIRING INFORMATION

| | |
|---|---|
| Input: | 6”, Black (L), White (N) #18AWG |
| Output: | 6”, Red (+), Blue (-) #18AWG |

## PACKAGING INFORMATION

| | |
|---|---|
| Weight: | 3.2 oz |
| Quantity: | 40pc/carton |

## WARRANTY

- 5 year limited warranty

# LED DRIVERS

# LV020W-12-L-UNI

## CONSTANT VOLTAGE

## 20 WATT 12 VOLT

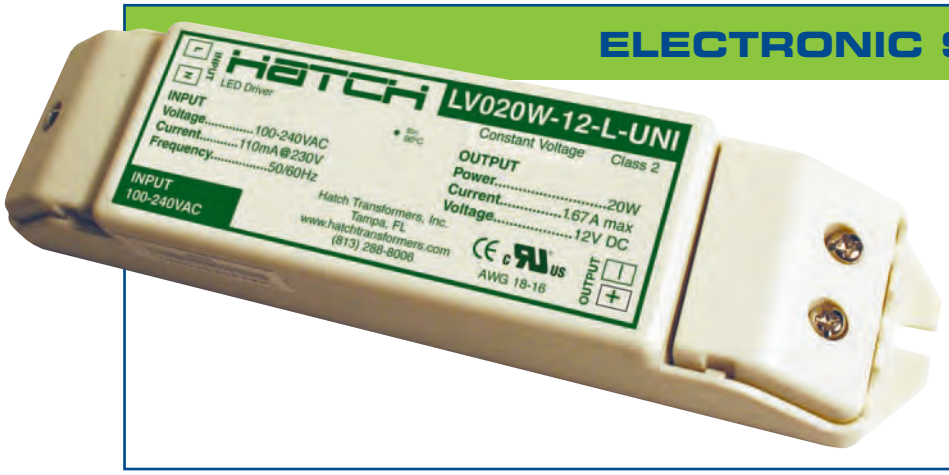


## ELECTRONIC SPECIFICATIONS

| | |
|---|---|
| Input Voltage Range | 90-264VAC |
| Input Frequency | 50/60Hz |
| Output Power | 20W |
| Input Current | 110mA@230VAC |
| Output Voltage | 11-12VDC |
| Output Current | 1.67A max |
| Power Factor | 0.95 |
| Ambient Temp. | -20°-+50°C |
| Case Temp. (Tc) | +90°C |
| Class 2 | Yes |

## WIRING DIAGRAM

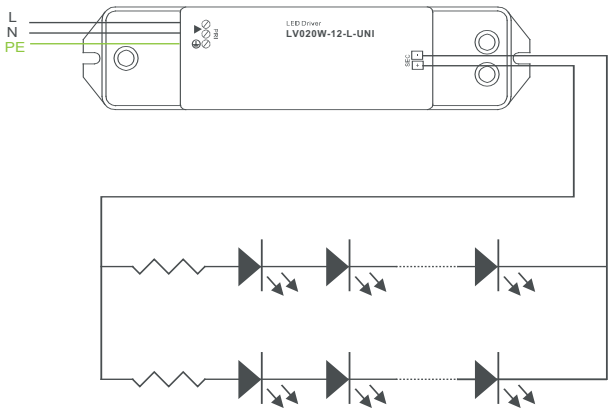


0 - 20W

## DIMENSIONS

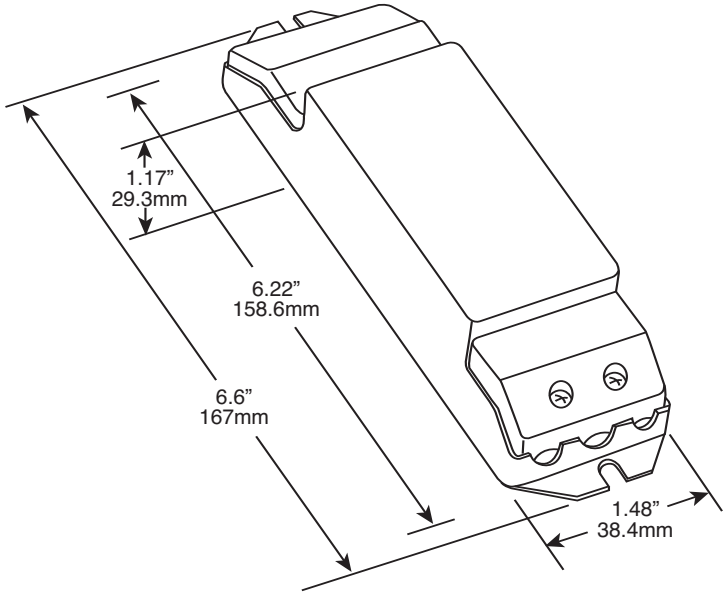


## LED TYPE

0.04-0.1W

| | | |
|---|---|---|
| Terminals | : | Screw Terminal |
| Case Material | : | Polycarbonate |
| RoHS Compliant | : | Yes |
| UL1310 Compliant | : | Yes |
| Indoor Use | : | Low Humidity / No Condensation |

Regulatory Approvals

CE c UL us

LED DRIVERS

08/09

# 24W | Constant Voltage Case Style D

## GENERAL INFORMATION

| | |
|---|---|
| **LED Driver Type** | Constant Voltage (Class 2) |
| **Maximum Wattage** | 24 Watts |
| **Input Voltage** | 120 VAC ± 10% Dedicated<br>120-277 VAC ± 10% Universal |
| **Input Frequency** | 50/60Hz |
| **Total Harmonic Distortion** | <20% |

## CASE STYLE D: METAL

## ELECTRICAL SPECIFICATIONS

| Watts | Output Voltage | Max Output Current | Input Voltage | Input Power | Input Current | Power Factor | Efficiency | Hatch Part Number |
|---|---|---|---|---|---|---|---|---|
| **Dedicated Models** | | | | | | | | |
| 24W | 12 VDC | 2.00A | 120 VAC | 29W | 0.29A | >0.90 | 82% | LV24-12N-120-D |
| | 24 VDC | 1.00A | 120 VAC | 29W | 0.29A | >0.90 | 83% | LV24-24N-120-D |
| **Universal Models** | | | | | | | | |
| 24W | 12 VDC | 2.00A | 120 - 277 VAC | 30W | 0.27A / 0.13A | >0.90 | 80% | LV24-12N-UNV-D[S] |
| | 24 VDC | 1.00A | 120 - 277 VAC | 29W | 0.27A / 0.13A | >0.90 | 83% | LV24-24N-UNV-D[S] |

## PRODUCT FEATURES

- Short circuit and overload protection
- Suitable for dry and damp locations
- Withstanding voltage: I/P – O/P 2kVAC
- Operating temperature range: -40°C to 90°C (measured at Tcase)
- MTBF: 376,000 hours @ 40°C ambient (~70°C case temp)
- Inrush Current: <10A Max @120VAC for 120V input models, cold start 25°C
- Inrush Current: <10A Max @120VAC for Universal input models, cold start 25°C

## APPROVALS

- UL 8750 recognized component
- EN61000-3-2
- EMC: Meets FCC47 CFR Part 15 (Class B) consumer limits
- [S]UL879 SAM approved

## MECHANICAL SPECIFICATIONS: CASE STYLE D

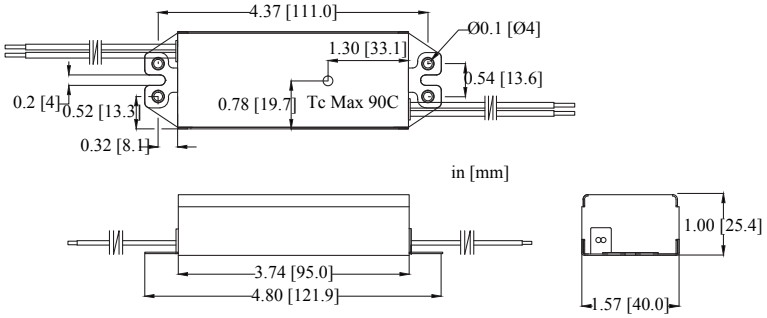


## DIMENSIONS [IN/MM]

| | |
|---|---|
| Length: | 3.74 [95.0] |
| Mounting: | 4.80 [121.9] |
| Width: | 1.57 [40.0] |
| Height: | 1.00 [25.4] |

## WIRING INFORMATION

| | |
|---|---|
| Input: | 12”, Black (L), White (N) #18AWG |
| Output: | 12”, Red (+), Blue (-) #18AWG |

## PACKAGING INFORMATION

| | |
|---|---|
| Weight: | 8.3oz |
| Quantity: | 60pc/carton |

## WARRANTY

- 5 year limited warranty

# 24W | Constant Voltage Case Style D

## GENERAL INFORMATION

| | |
|---|---|
| **LED Driver Type** | Constant Voltage (Class 2) |
| **Maximum Wattage** | 24 Watts |
| **Input Voltage** | 120 VAC ± 10% Dedicated<br>120-277 VAC ± 10% Universal |
| **Input Frequency** | 50/60Hz |
| **Total Harmonic Distortion** | <20% |

## CASE STYLE D: METAL

## PERFORMANCE CURVES

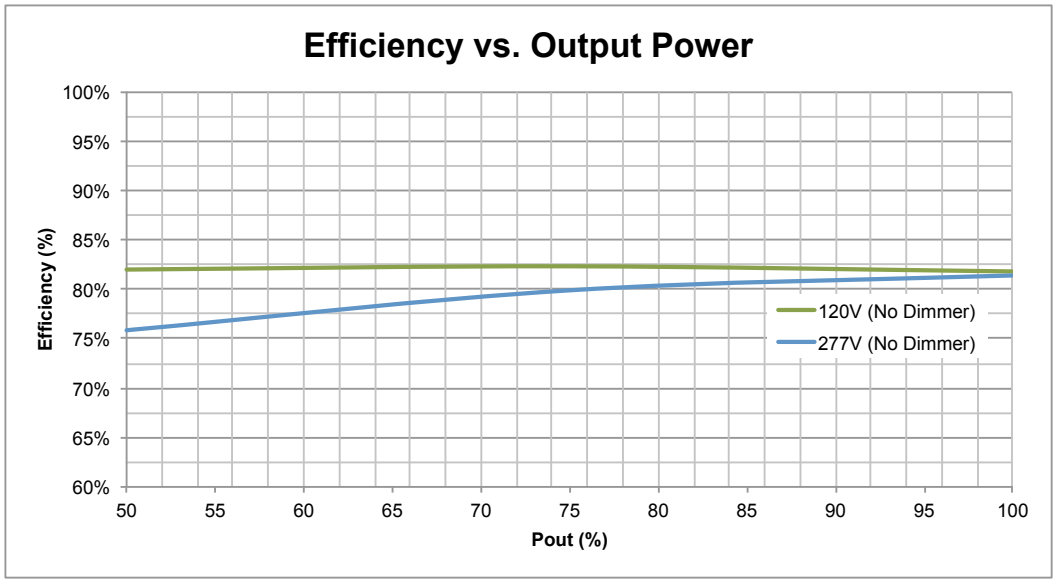


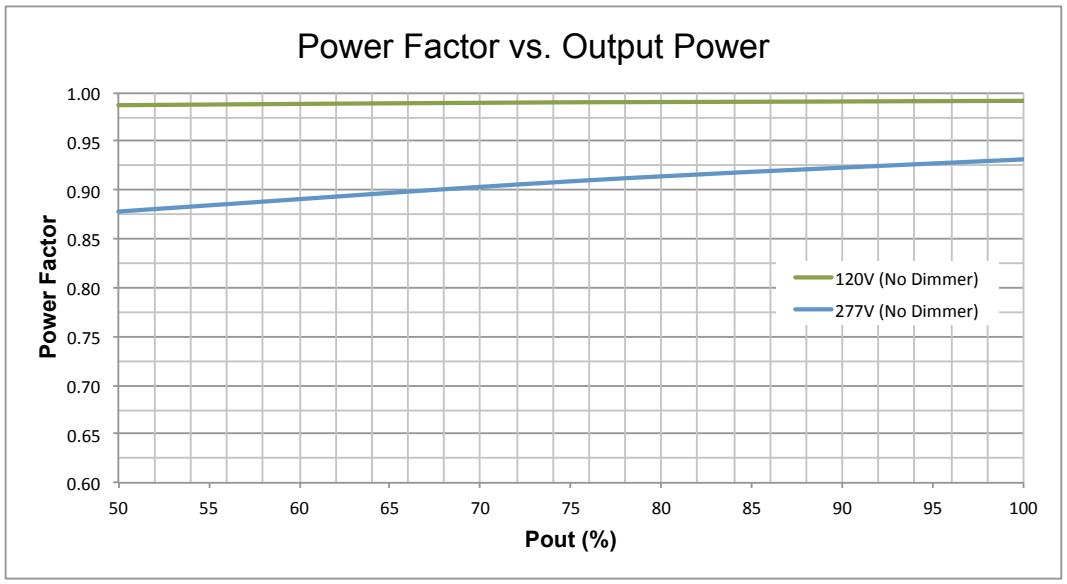


Efficiency and PF measured at 25°C.
Measurements made on model LV24-12N-UNV-D.

# 40W | Constant Voltage Case Style W

## GENERAL INFORMATION

| | |
|---|---|
| **LED Driver Type** | Constant Voltage (Class 2) |
| **Maximum Wattage** | 40 Watts |
| **Input Voltage** | 120 - 277 VAC ± 10% Universal |
| **Input Frequency** | 50/60Hz |
| **Total Harmonic Distortion** | <20% |

## CASE STYLE W: POLYCARBONATE

## ELECTRICAL SPECIFICATIONS

| Watts | Output Voltage | Max Output Current | Input Voltage | Input Power | Input Current | Power Factor | Efficiency | Hatch Part Number |
|---|---|---|---|---|---|---|---|---|
| 40W | 24 VDC | 1.67A | 120 - 277 VAC | 47W | 0.50/0.13A | >0.90 | 86% | LV40-24N-UNV-W |

## PRODUCT FEATURES

- Short circuit and overload protection
- Over temperature protection
- Suitable for dry and damp locations
- Withstanding voltage: I/P – O/P 2kVAC
- Operating temperature range: -40°C to 90°C (measured at Tcase)
- MTBF: TBD

## APPROVALS

- UL 8750 recognized component
- EN61000-3-2
- EMC: Meets FCC47 CFR Part 15 (Class B) consumer limits
- IP66

## MECHANICAL SPECIFICATIONS: CASE STYLE W

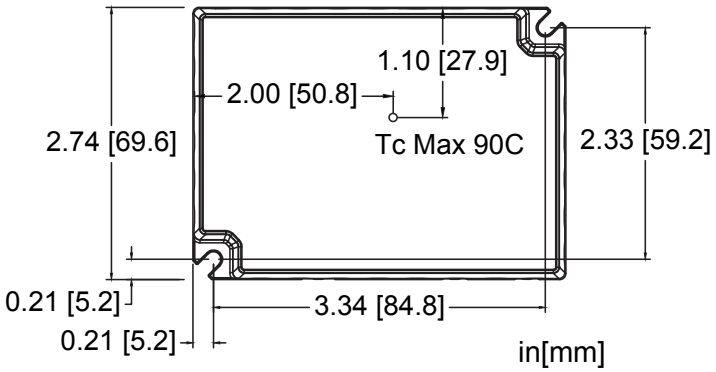


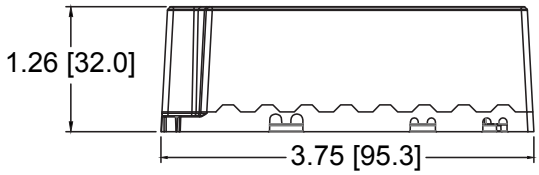


### DIMENSIONS [IN/MM]

| | |
|---|---|
| Length: | 3.34 [84.8] |
| Mounting: | 3.75 [95.3] |
| Width: | 2.74 [69.6] |
| Height: | 1.26 [32.0] |

### WIRING INFORMATION

| | |
|---|---|
| Input: | 12”, Black (L), White (N) #18AWG |
| Output: | 12”, Red (+), Blue (-) #18AWG |

### PACKAGING INFORMATION

| | |
|---|---|
| Weight: | 10.6 oz |
| Quantity: | 40pc/carton |

## WARRANTY

- 5 year limited warranty

# 60W | Constant Voltage Case Style F

## GENERAL INFORMATION

| | |
|---|---|
| **LED Driver Type** | Constant Voltage (Class 2) |
| **Maximum Wattage** | 60 Watts |
| **Input Voltage** | 120-277 VAC ± 10% Universal<br>120 VAC ± 10% Dedicated |
| **Input Frequency** | 50/60Hz |
| **Total Harmonic Distortion** | <20% |

## CASE STYLE F: METAL

## ELECTRICAL SPECIFICATIONS

| Watts | Output Voltage | Max Output Current | Input Voltage | Input Power | Input Current | Power Factor | Efficiency | Hatch Part Number |
|---|---|---|---|---|---|---|---|---|
| 60W | 12 VDC | 5.00A | 120 - 277 VAC | 71W | 0.65/0.28A | >0.90 | 85% | LV60-12N-UNV-F[S] |
| | 14 VDC | 4.30A | 120 - 277 VAC | 71W | 0.65/0.28A | >0.90 | 85% | LV60-14N-UNV-F |
| | 24 VDC | 2.50A | 120 - 277 VAC | 70W | 0.65/0.28A | >0.90 | 86% | LV60-24N-UNV-F[S] |
| | 24 VDC | 2.50A | 120 VAC | 69W | 0.64A | >0.90 | 87% | LV60-24N-120-F[S] |

## PRODUCT FEATURES

- Short circuit and overload protection
- Over temperature protection
- Suitable for dry and damp locations
- Withstanding voltage: I/P – O/P 2kVAC
- Operating temperature range: -40°C to 90°C (measured at Tcase)
- MTBF: 299,000 hours @ 40°C ambient (~70°C case temp)
- Inrush Current: <20A Max @230VAC for Universal input models, cold start 25°C

## APPROVALS

- UL 8750 recognized component
- EN61000-3-2
- EMC: Meets FCC47 CFR Part 15 (Class B) consumer limits
- [S]UL879 SAM approved

## MECHANICAL SPECIFICATIONS: CASE STYLE F

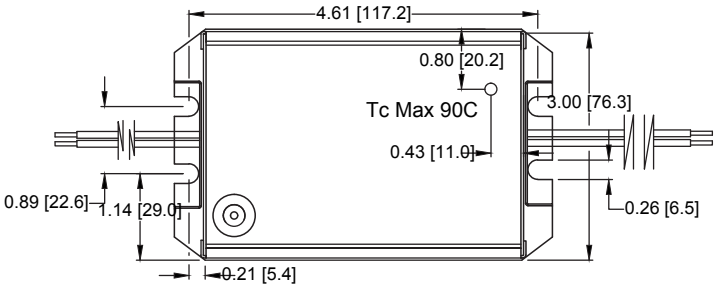


in[mm]

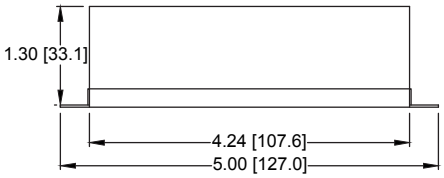


## DIMENSIONS [IN/MM]

| | |
|---|---|
| Length: | 4.24 [107.6] |
| Mounting: | 5.00 [127.0] |
| Width: | 3.00 [76.3] |
| Height: | 1.30 [33.1] |

## WIRING INFORMATION

| | |
|---|---|
| Input: | 12”, Black (L), White (N) #18AWG |
| Output: | 12”, Red (+), Blue (-) #18AWG |

## PACKAGING INFORMATION

| | |
|---|---|
| Weight: | 23 oz |
| Quantity: | 30pc/carton |

## WARRANTY

- 5 year limited warranty

## RELATED PRODUCTS

- Case Style K: 9.5” x 3.0” x 1.3”
- Case Style I: 9.5” x 1.7” x 1.2”
- Case Style R: 9.6” x 1.9” x 1.5”

# 60W | Constant Voltage Case Style F

## GENERAL INFORMATION

| | |
|---|---|
| **LED Driver Type** | Constant Voltage (Class 2) |
| **Maximum Wattage** | 60 Watts |
| **Input Voltage** | 120-277 VAC ± 10% Universal<br>120 VAC ± 10% Dedicated |
| **Input Frequency** | 50/60Hz |
| **Total Harmonic Distortion** | <20% |

## CASE STYLE F: METAL

## PERFORMANCE CURVES

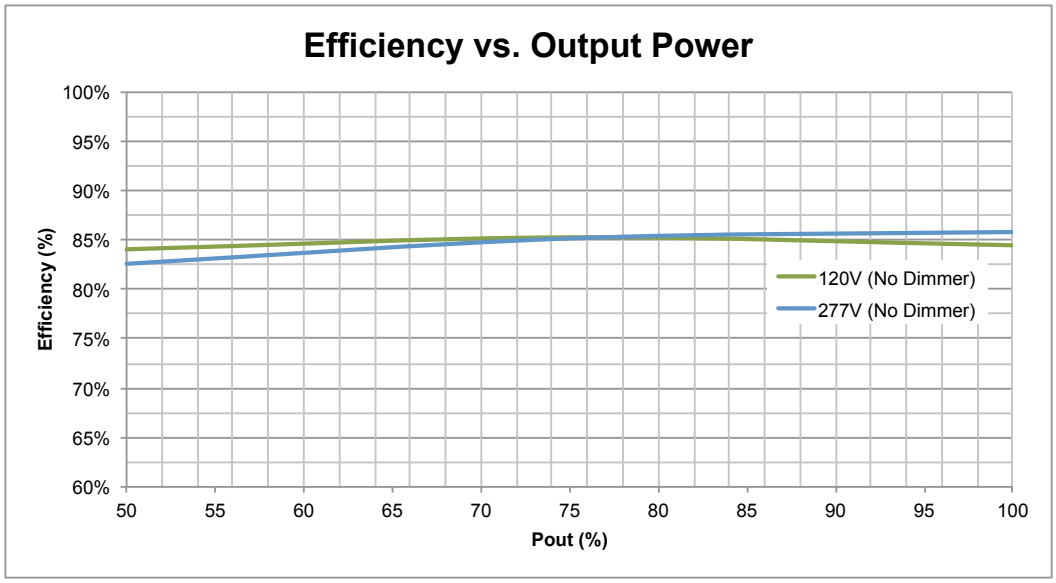


Measurements made on model LV60-12N-UNV-F.

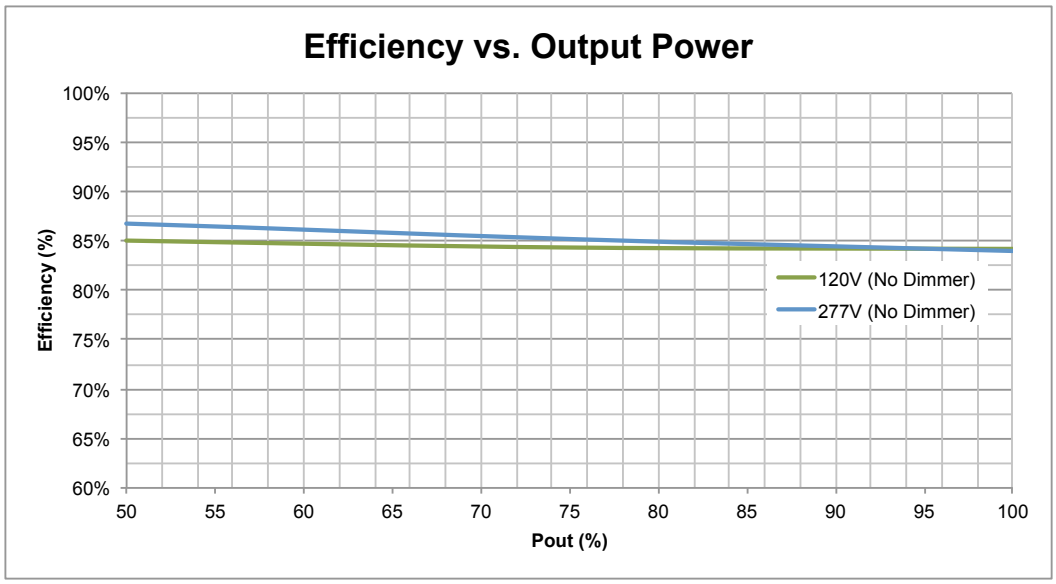


Measurements made on model LV60-24N-UNV-F.

Efficiency and PF measured at 25°C.

# 60W | Constant Voltage Case Style F

## GENERAL INFORMATION

| | |
|---|---|
| **LED Driver Type** | Constant Voltage (Class 2) |
| **Maximum Wattage** | 60 Watts |
| **Input Voltage** | 120-277 VAC ± 10% Universal<br>120 VAC ± 10% Dedicated |
| **Input Frequency** | 50/60Hz |
| **Total Harmonic Distortion** | <20% |

## CASE STYLE F: METAL

## PERFORMANCE CURVES

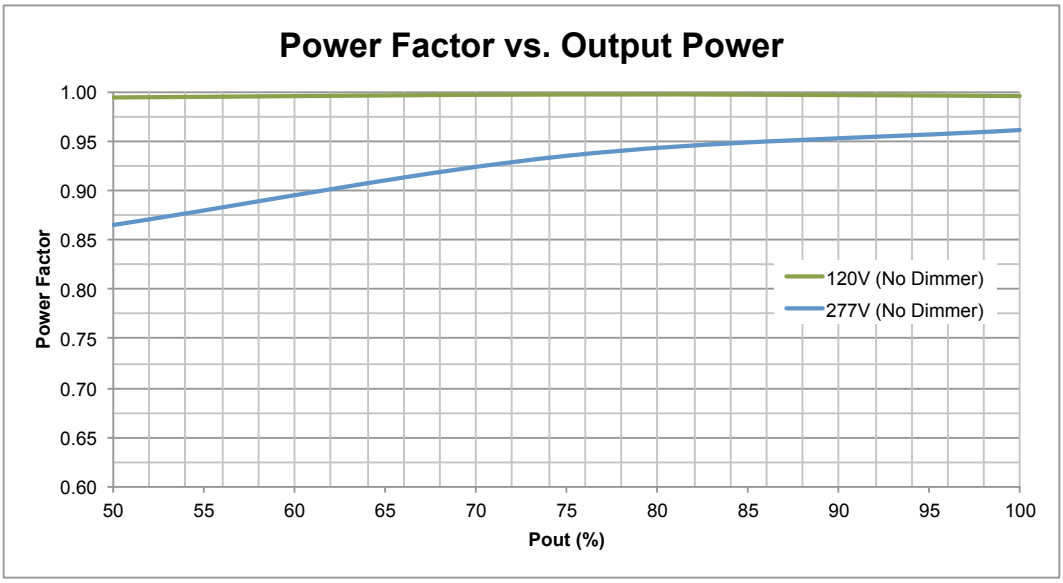


Measurements made on model LV60-12N-UNV-F.

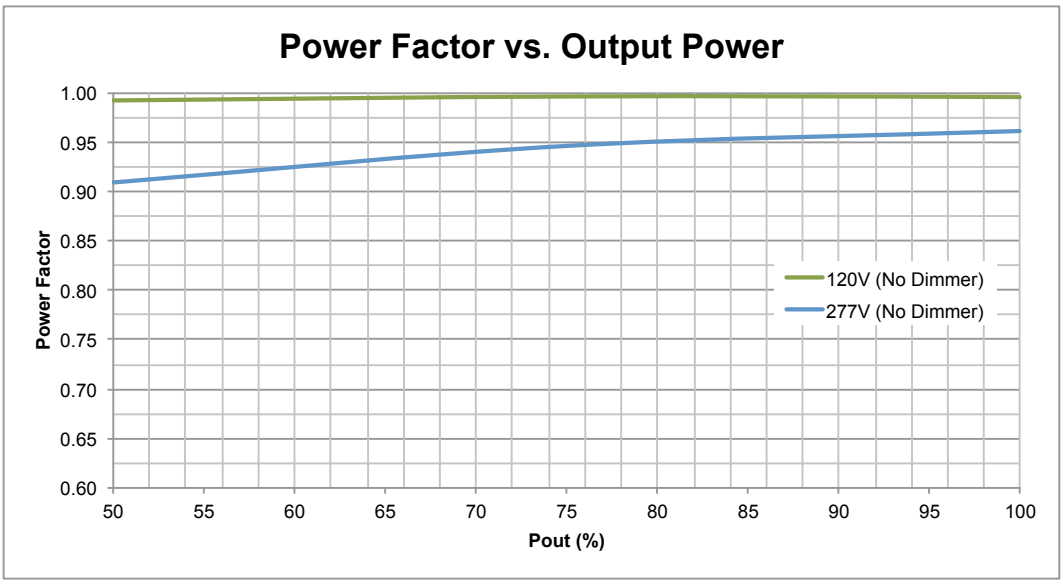


Measurements made on model LV60-24N-UNV-F.

Efficiency and PF measured at 25°C.

# 60W | Constant Voltage Case Style F

## GENERAL INFORMATION

| | |
|---|---|
| **LED Driver Type** | Constant Voltage (Class 2) |
| **Maximum Wattage** | 60 Watts |
| **Input Voltage** | 120-277 VAC ± 10% Universal<br>120 VAC ± 10% Dedicated |
| **Input Frequency** | 50/60Hz |
| **Total Harmonic Distortion** | <20% |

## CASE STYLE F: METAL

## PERFORMANCE CURVES

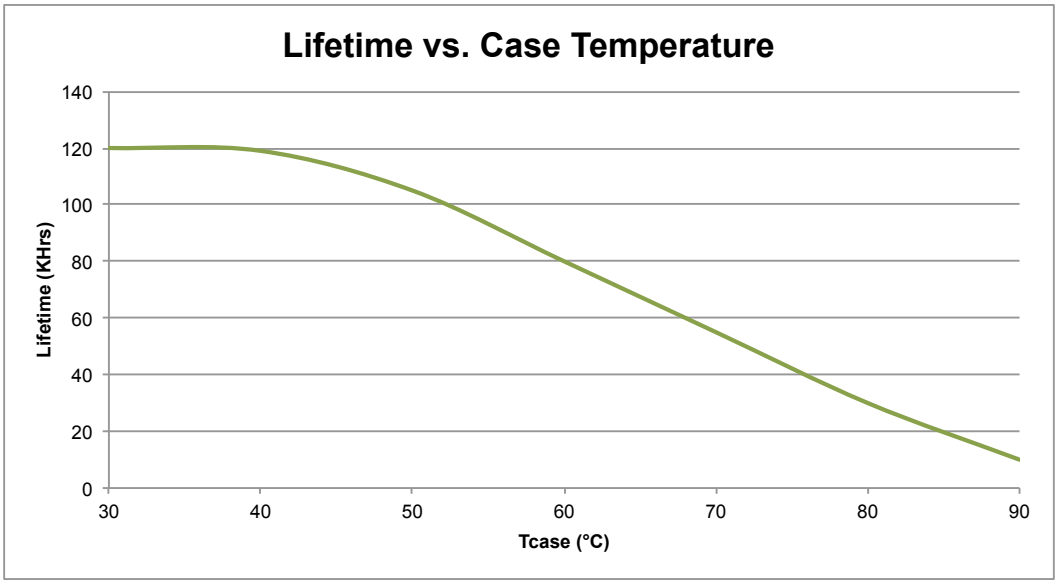


Measurements made on model LV60-12N-UNV-F.

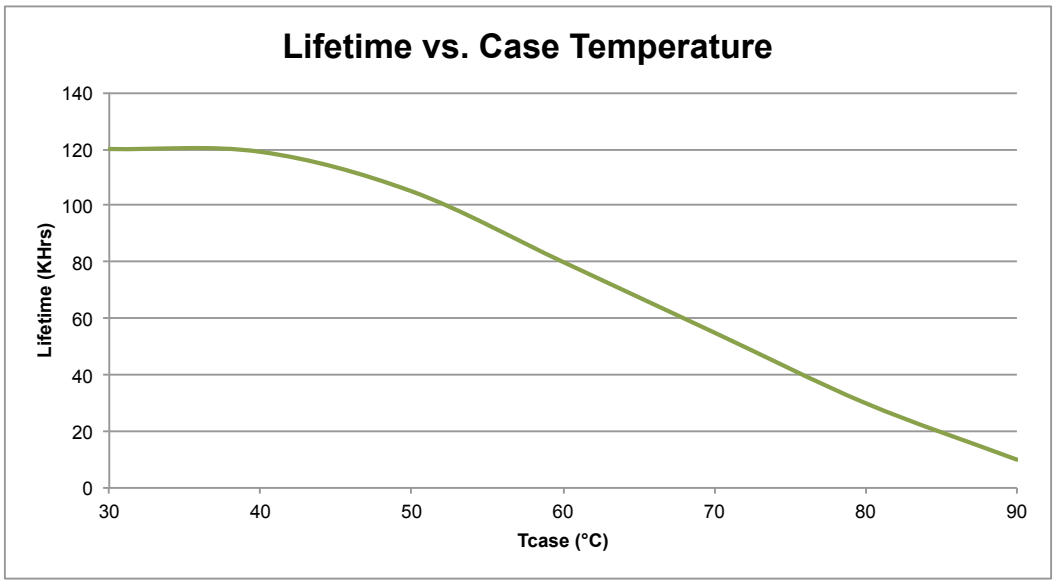


Measurements made on model LV60-24N-UNV-F.

Efficiency and PF measured at 25°C.

# 60W | Constant Voltage Case Style I

## GENERAL INFORMATION

| | |
|---|---|
| **LED Driver Type** | Constant Voltage (Class 2) |
| **Maximum Wattage** | 60 Watts |
| **Input Voltage** | 120 VAC ± 10% Dedicated<br>120-277 VAC ± 10% Universal<br>347 VAC ± 10% Dedicated |
| **Input Frequency** | 50/60Hz |
| **Total Harmonic Distortion** | <20% |

## CASE STYLE I: METAL

## ELECTRICAL SPECIFICATIONS

| Watts | Output Voltage | Max Output Current | Input Voltage | Input Power | Input Current | Power Factor | Efficiency | Hatch Part Number |
|---|---|---|---|---|---|---|---|---|
| 60W | 12 VDC | 5.00A | 120 - 277 VAC | 71W | 0.65/0.28A | >0.90 | 85% | LV60-12N-UNV-I[S] |
| | 12 VDC | 5.00A | 120 VAC | 73W | 0.64A | >0.90 | 82% | LV60-12N-120-I[S] |
| | 12 VDC | 5.00A | 347 VAC | 73W | 0.25A | >0.90 | 83% | LV60-12N-347-I |
| | 14 VDC | 4.30A | 120 - 277 VAC | 71W | 0.65/0.28A | >0.90 | 85% | LV60-14N-UNV-I |
| | 24 VDC | 2.50A | 120 - 277 VAC | 70W | 0.65/0.28A | >0.90 | 86% | LV60-24N-UNV-I[S] |
| | 24 VDC | 2.50A | 120 VAC | 69W | 0.64A | >0.90 | 87% | LV60-24N-120-I[S] |

## PRODUCT FEATURES

- Short circuit and overload protection
- Suitable for dry and damp locations
- Withstanding voltage: I/P – O/P 2kVAC
- Surge voltage rating: L-N 2kV, L/N-G 2kV
- Operating temperature range: -40°C to 90°C (measured at Tcase)
- MTBF: 299,000 hours @ 40°C ambient (~70°C case temp)
- Inrush Current: <20A Max @230VAC for Universal input models, cold start 25°C

## APPROVALS

- UL 8750 recognized component
- EN61000-3-2
- EMC: Meets FCC47 CFR Part 15 (Class A) Non-consumer limits
- [S]UL879 SAM approved

## MECHANICAL SPECIFICATIONS: CASE STYLE I

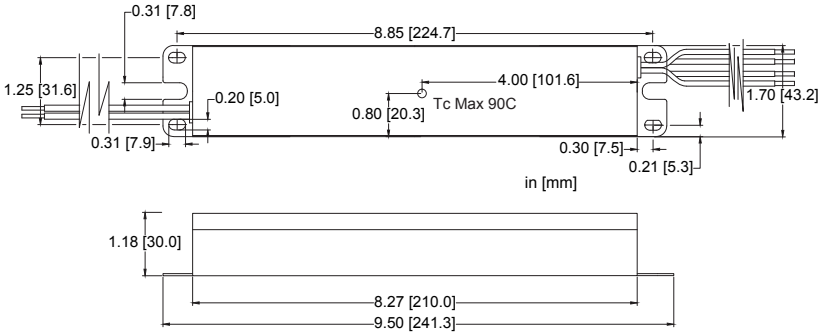





## DIMENSIONS [IN/MM]

| | |
|---|---|
| Length: | 8.85 [224.7] |
| Mounting: | 9.50 [241.3] |
| Width: | 1.70 [43.2] |
| Height: | 1.18 [30.0] |

## WIRING INFORMATION

| | |
|---|---|
| Input: | 12”, Black (L), White (N) #18AWG |
| Output: | 12”, Red (+), Blue (-) #22AWG |

## PACKAGING INFORMATION

| | |
|---|---|
| Weight: | 21.2 oz |
| Quantity: | 30pc/carton |

## WARRANTY

- 5 year limited warranty

## RELATED PRODUCT

- Case Style F: 5.0” x 3.0” x 1.4”
- Case Style K: 9.6” x 1.9” x 1.5”
- Case Style R: 9.6” x 1.9” x 1.5”

# 60W | Constant Voltage Case Style I

## GENERAL INFORMATION

| | |
|---|---|
| **LED Driver Type** | Constant Voltage (Class 2) |
| **Maximum Wattage** | 60 Watts |
| **Input Voltage** | 120 VAC ± 10% Dedicated<br>120-277 VAC ± 10% Universal<br>347 VAC ± 10% Dedicated |
| **Input Frequency** | 50/60Hz |
| **Total Harmonic Distortion** | <20% |

## CASE STYLE I: METAL

## PERFORMANCE CURVES

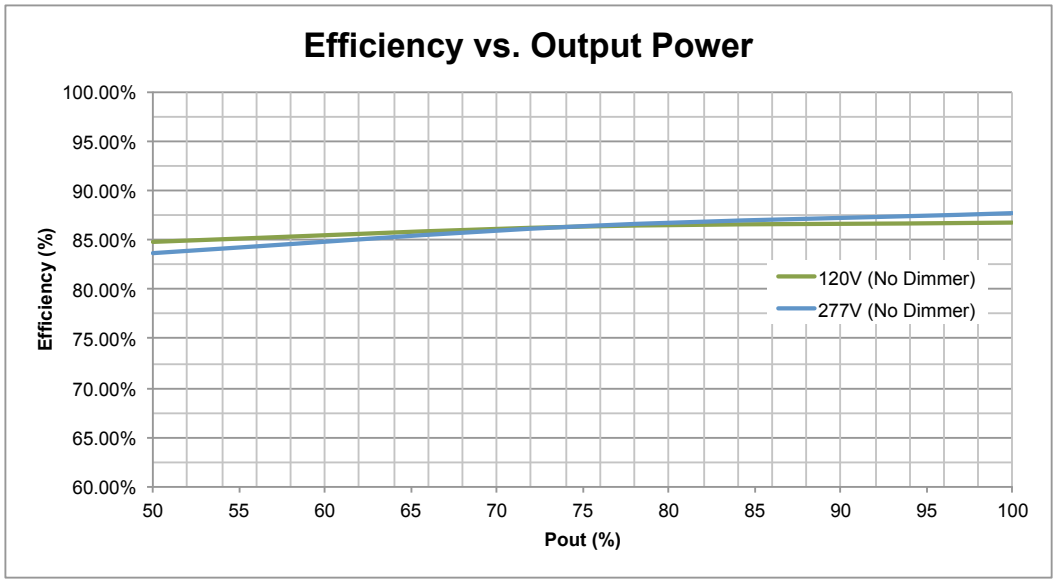


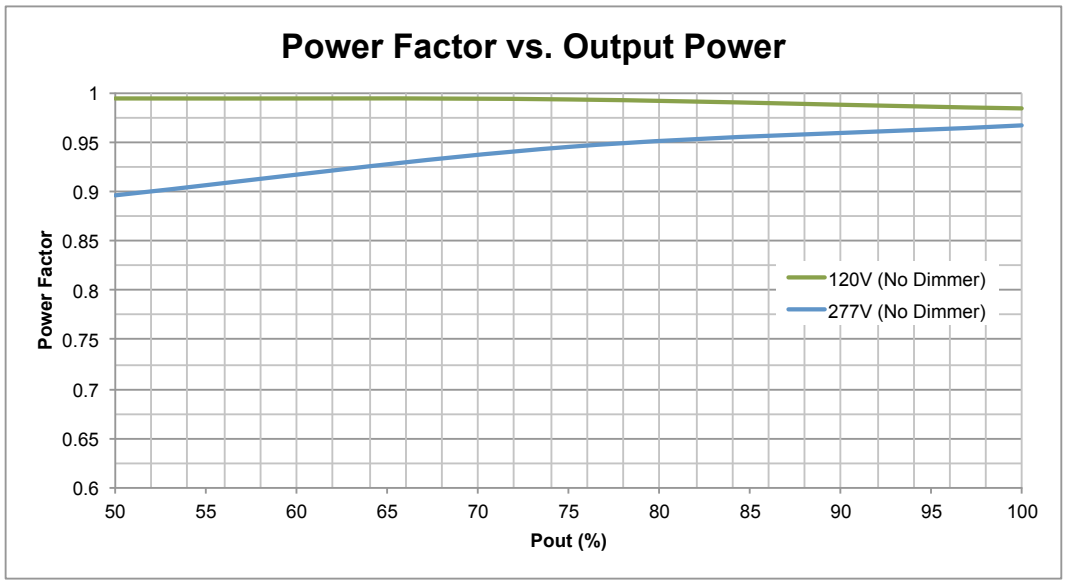


Efficiency and PF measured at 25°C.
Measurements made on model LV60-24N-UNV-I.

# 60W | Constant Voltage Case Style I

## GENERAL INFORMATION

| | |
|---|---|
| **LED Driver Type** | Constant Voltage (Class 2) |
| **Maximum Wattage** | 60 Watts |
| **Input Voltage** | 120 VAC ± 10% Dedicated<br>120-277 VAC ± 10% Universal<br>347 VAC ± 10% Dedicated |
| **Input Frequency** | 50/60Hz |
| **Total Harmonic Distortion** | <20% |

## CASE STYLE I: METAL

## PERFORMANCE CURVES

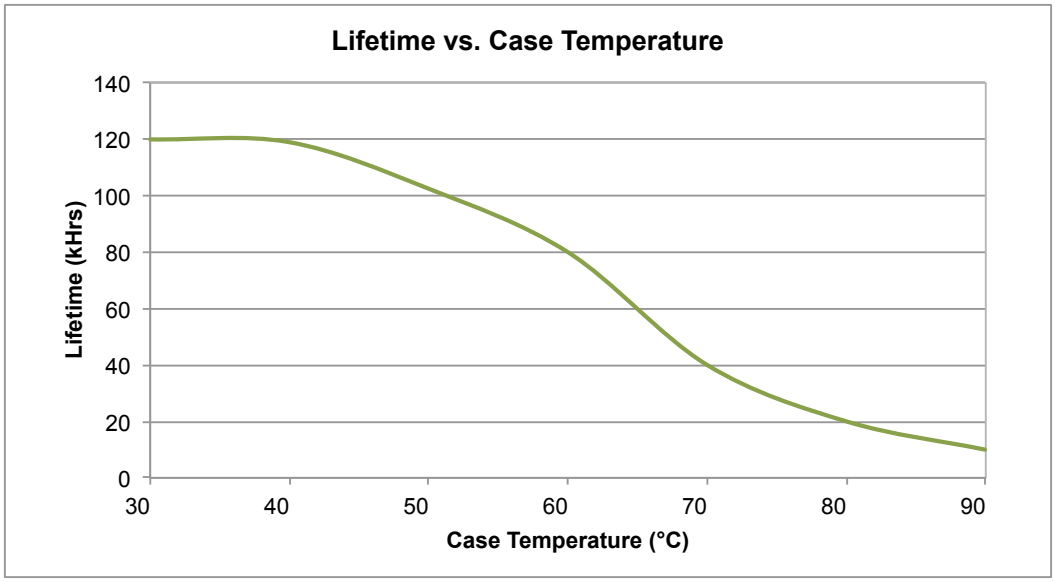


Efficiency and PF measured at 25°C.
Measurements made on model LV60-24N-UNV-I.

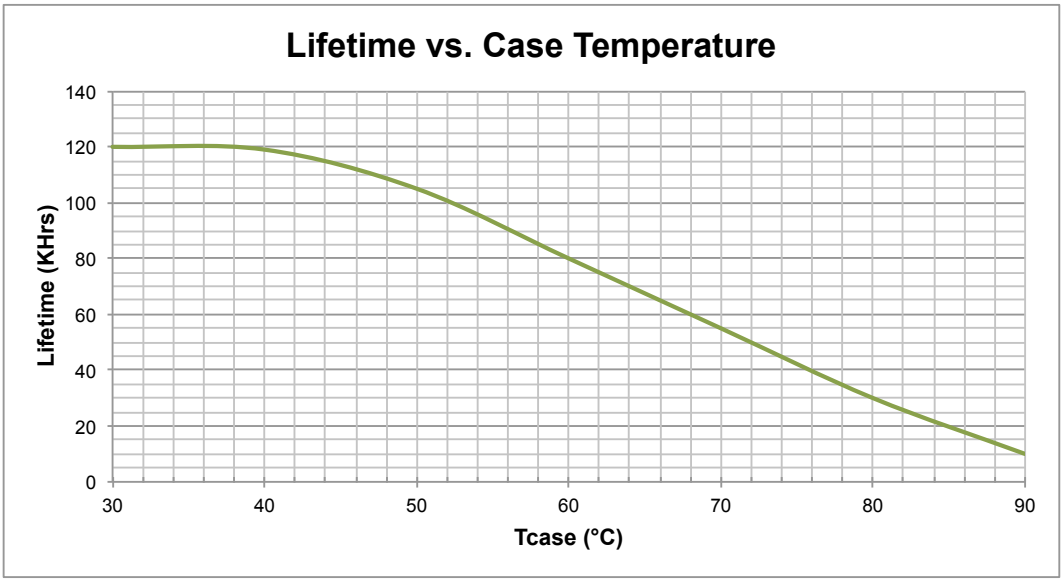


Measurements made on model LV60-12N-UNV-I.

# 60W | Constant Voltage Case Style K

## GENERAL INFORMATION

| | |
|---|---|
| **LED Driver Type** | Constant Voltage (Class 2) |
| **Maximum Wattage** | 60 Watts |
| **Input Voltage** | 120 - 277 VAC ± 10% Universal |
| **Input Frequency** | 50/60Hz |
| **Total Harmonic Distortion** | <20% |

## CASE STYLE K: METAL

## ELECTRICAL SPECIFICATIONS

| Watts | Output Voltage | Max Output Current | Input Voltage | Input Power | Input Current | Power Factor | Efficiency | Hatch Part Number |
|---|---|---|---|---|---|---|---|---|
| 60W | 24 VDC | 2.50A | 120 - 277 VAC | 70W | 0.65/0.28A | >0.90 | 86% | LV60-24N-UNV-K |
| | 12 VDC | 5.00A | 120 - 277 VAC | 71W | 0.63/0.28A | >0.90 | 85% | LV60-12N-UNV-K |

## PRODUCT FEATURES

- Short circuit and overload protection
- Over temperature protection
- Suitable for dry and damp locations
- Withstanding voltage: I/P – O/P 2kVAC
- Operating temperature range: -40°C to 90°C (measured at Tcase)
- MTBF: 299,000 hours @ 40°C ambient (~70°C case temp)
- Inrush Current: <20A Max @230VAC, cold start 25°C

## APPROVALS

- UL 8750 listed component
- EN61000-3-2
- EMC: Meets FCC47 CFR Part 15 (Class B) consumer limits

## MECHANICAL SPECIFICATIONS: CASE STYLE K

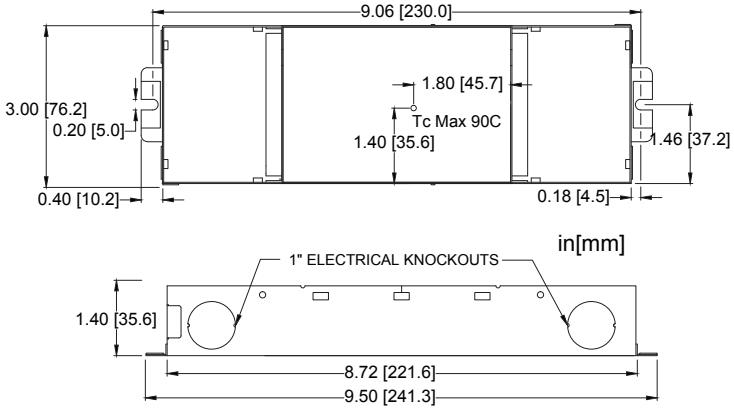


## DIMENSIONS [IN/MM]

| | |
|---|---|
| Length: | 8.72 [221.6] |
| Mounting: | 9.50 [241.3] |
| Width: | 3.00 [76.2] |
| Height: | 1.40 [35.6] |

## WIRING INFORMATION

| | |
|---|---|
| Input: | 12", Black (L), White (N) #18AWG |
| Output: | 12", Red (+), Blue (-) #18AWG |

## PACKAGING INFORMATION

| | |
|---|---|
| Weight: | 30 oz |
| Quantity: | 20pc/carton |

## WARRANTY

- 5 year limited warranty

## RELATED PRODUCT

- Case Style F: 5.0" x 3.0" x 1.4"
- Case Style I: 9.5" x 1.7" x 1.2"
- Case Style R: 9.6" x 1.9" x 1.5"

# 60W | Constant Voltage Case Style K

## GENERAL INFORMATION

| | |
|---|---|
| **LED Driver Type** | Constant Voltage (Class 2) |
| **Maximum Wattage** | 60 Watts |
| **Input Voltage** | 120 - 277 VAC ± 10% Universal |
| **Input Frequency** | 50/60Hz |
| **Total Harmonic Distortion** | <20% |

## CASE STYLE K: METAL

## PERFORMANCE CURVES

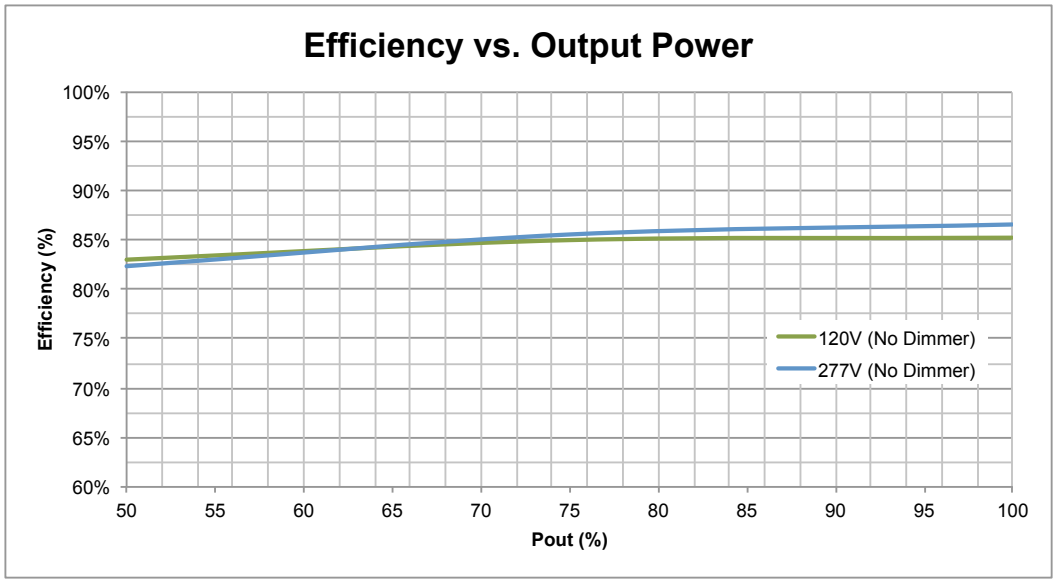


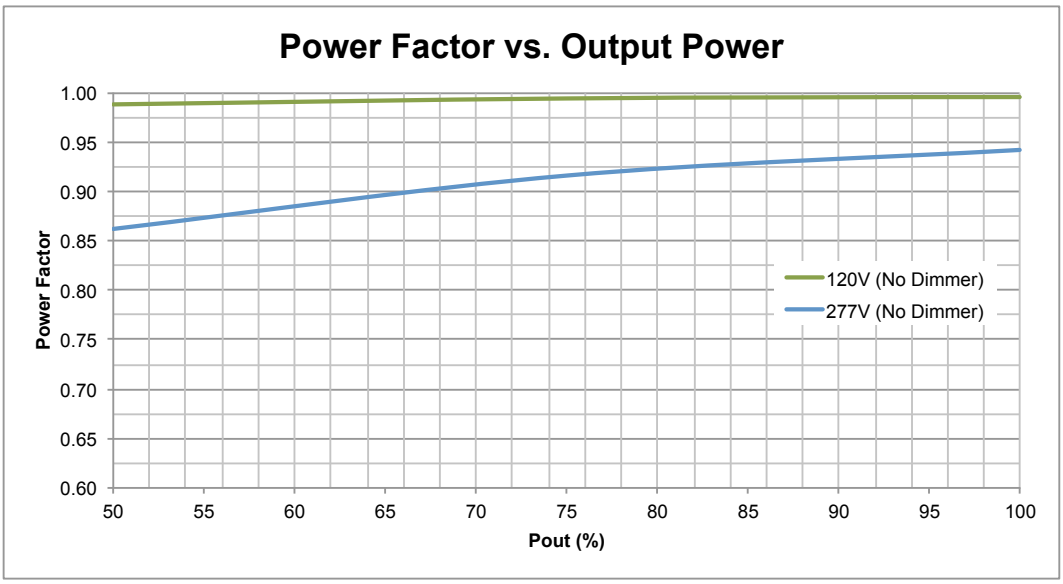


Efficiency and PF measured at 25°C.
Measurements made on model LV60-24N-UNV-K.

HATCH™ LED DRIVERS

# 60W | Constant Voltage Case Style K

## GENERAL INFORMATION

| | |
|---|---|
| **LED Driver Type** | Constant Voltage (Class 2) |
| **Maximum Wattage** | 60 Watts |
| **Input Voltage** | 120 - 277 VAC ± 10% Universal |
| **Input Frequency** | 50/60Hz |
| **Total Harmonic Distortion** | <20% |

## CASE STYLE K: METAL

## PERFORMANCE CURVES

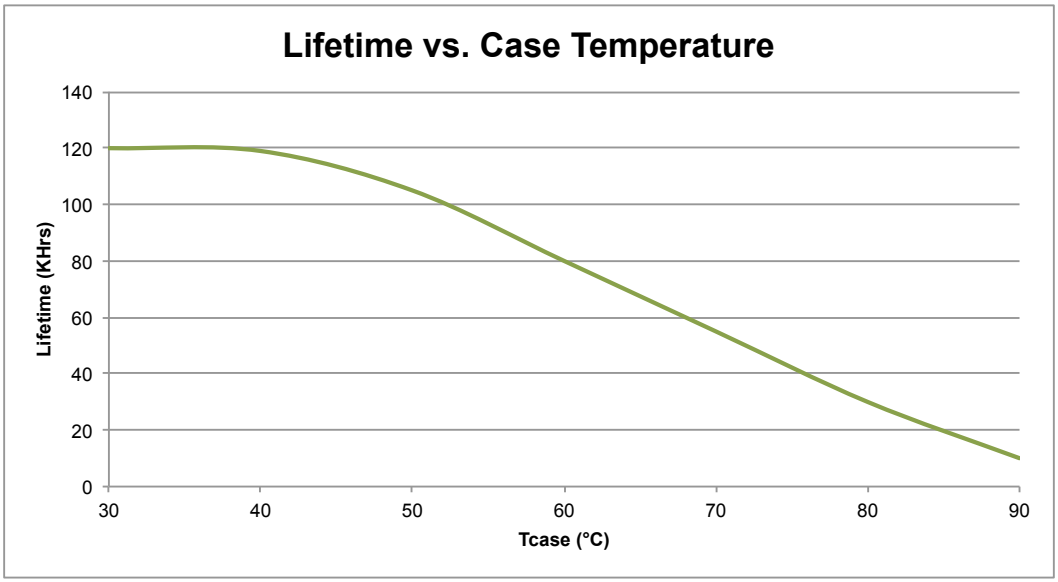


Efficiency and PF measured at 25°C.
Measurements made on model LV60-24N-UNV-K.

# 60W Constant Voltage Case Style R

## GENERAL INFORMATION

| | |
|---|---|
| **LED Driver Type** | Constant Voltage (Class 2) |
| **Maximum Wattage** | 60 Watts |
| **Input Voltage** | 120 - 277 VAC ± 10% Universal |
| **Input Frequency** | 50/60Hz |
| **Total Harmonic Distortion** | <20% |

## CASE STYLE R: METAL

## ELECTRICAL SPECIFICATIONS

| Watts | Output Voltage | Max Output Current | Input Voltage | Input Power | Input Current | Power Factor | Efficiency | Hatch Part Number |
|---|---|---|---|---|---|---|---|---|
| 60W | 12 VDC | 5.00A | 120 - 277 VAC | 71W | 0.65/0.29A | >0.90 | 85% | LV60-12N-UNV-R[S] |
| | 24 VDC | 2.50A | 120 - 277 VAC | 70W | 0.65/0.29A | >0.90 | 86% | LV60-24N-UNV-R[S] |

## PRODUCT FEATURES

- Short circuit and overload protection
- Withstanding voltage: I/P - O/P 2kVAC
- Operating temperature range: -40°C to 90°C (measured at Tcase)
- MTBF: 299,000 hours @ 40°C ambient (~70°C case temp)
- Inrush Current: <20A Max @230VAC, cold start 25°C

## APPROVALS

- UL 8750 recognized component
- EN61000-3-2
- EMC: Meets FCC47 CFR Part 15 (Class B) consumer limits
- IP67
- [S]UL879 SAM approved

## MECHANICAL SPECIFICATIONS: CASE STYLE R

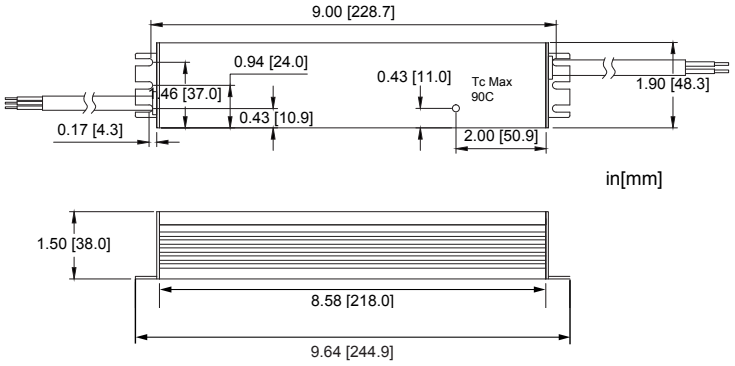


## DIMENSIONS [IN/MM]

| | |
|---|---|
| Length: | 8.58 [218.0] |
| Mounting: | 9.64 [244.9] |
| Width: | 1.90 [48.3] |
| Height: | 1.50 [38.0] |

## WIRING INFORMATION

| | |
|---|---|
| Input: | 12", Type SJTW Cable, Black (L), White (N), Ground (G) #18AWG |
| Output: | 12", Type SJTW Cable, Red (+), Blue (-) #18AWG |

## PACKAGING INFORMATION

| | |
|---|---|
| Weight: | 25.5oz |
| Quantity: | 40pc/carton |

## WARRANTY

- 5 Year limited warranty

## RELATED PRODUCT

- Case Style F: 5.0" x 3.0" x 1.4"
- Case Style K: 9.6" x 1.9" x 1.5"
- Case Style I: 9.5" x 1.7" x 1.2"

# 60W Constant Voltage Case Style R

## GENERAL INFORMATION

| | |
|---|---|
| **LED Driver Type** | Constant Voltage (Class 2) |
| **Maximum Wattage** | 60 Watts |
| **Input Voltage** | 120 - 277 VAC ± 10% Universal |
| **Input Frequency** | 50/60Hz |
| **Total Harmonic Distortion** | <20% |

## CASE STYLE R: METAL

## PERFORMANCE CURVES

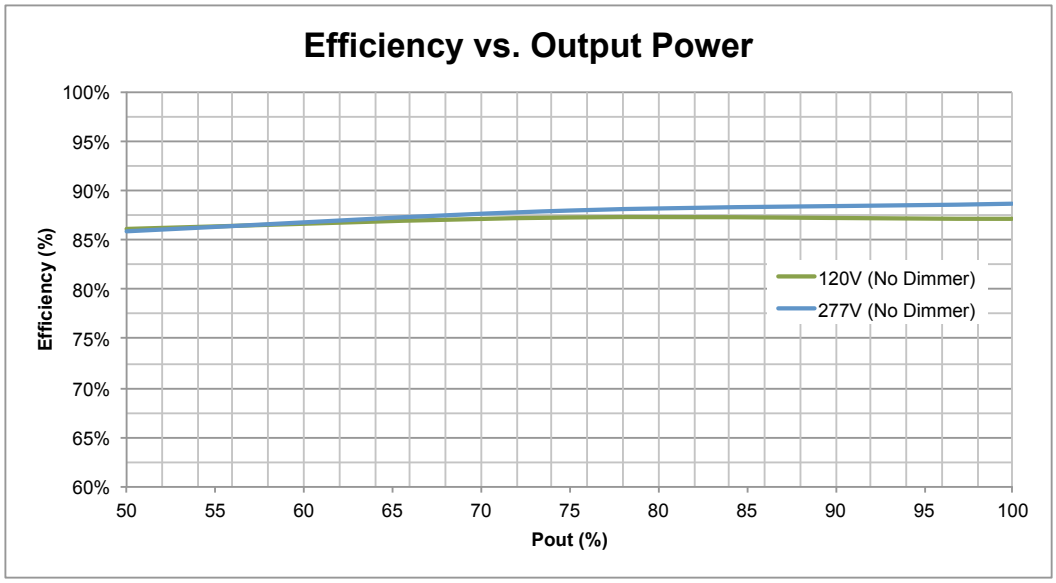


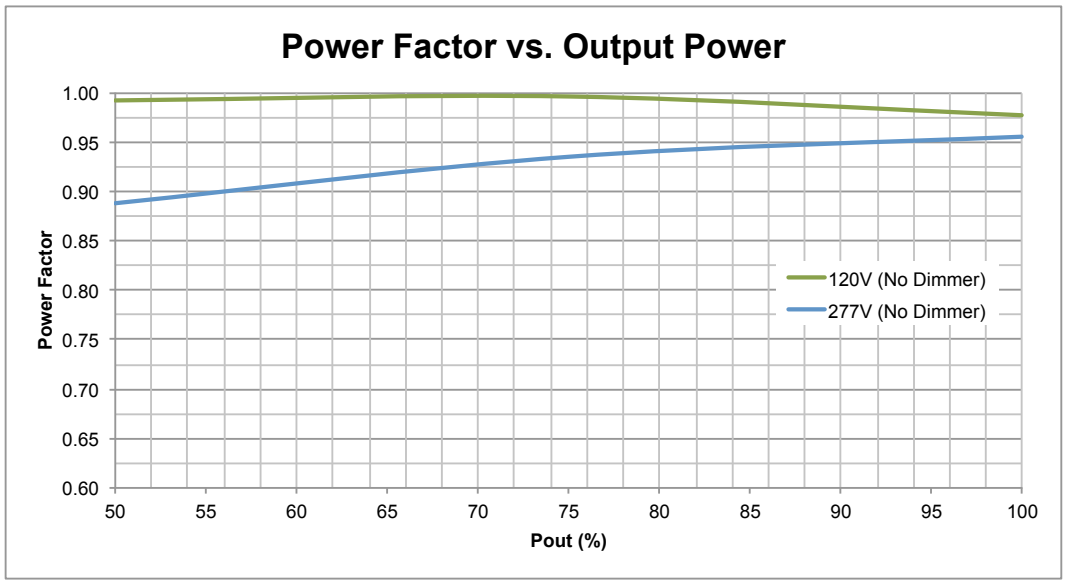


Efficiency and PF measured at 25°C.
Measurements made on model LV60-24N-UNV-R.

# 60W Constant Voltage Case Style R

## GENERAL INFORMATION

| | |
|---|---|
| **LED Driver Type** | Constant Voltage (Class 2) |
| **Maximum Wattage** | 60 Watts |
| **Input Voltage** | 120 - 277 VAC ± 10% Universal |
| **Input Frequency** | 50/60Hz |
| **Total Harmonic Distortion** | <20% |

## CASE STYLE R: METAL

## PERFORMANCE CURVES

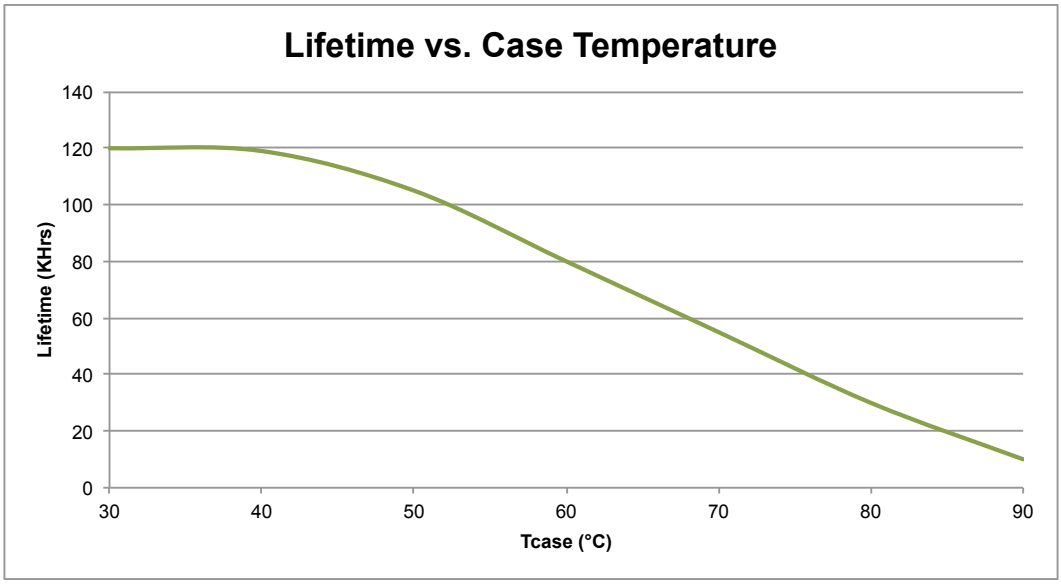


Efficiency and PF measured at 25°C.
Measurements made on model LV60-24N-UNV-R.

# 80W | Constant Voltage Case Style I

## GENERAL INFORMATION

| | |
|---|---|
| **LED Driver Type** | Constant Voltage (Class 2) |
| **Maximum Wattage** | 80 Watts |
| **Input Voltage** | 120 VAC ± 10% Dedicated<br>120 - 277 VAC ± 10% Universal |
| **Input Frequency** | 50/60Hz |
| **Total Harmonic Distortion** | <20% |

## CASE STYLE I: METAL

## ELECTRICAL SPECIFICATIONS

| Watts | Output Voltage | Max Output Current | Input Voltage | Input Power | Input Current 120/277V | Power Factor | Efficiency | Hatch Part Number |
|---|---|---|---|---|---|---|---|---|
| 80W | 12 VDC | 6.60A | 120 - 277 VAC | 93W | 0.86/0.40A | >0.90 | 86% | LV80-12N-UNV-I |
| | 24 VDC | 3.30A | 120 - 277 VAC | 93W | 0.86/0.40A | >0.90 | 86% | LV80-24N-UNV-I |
| | 24 VDC | 3.30A | 120 VAC | 92W | 0.79A | >0.90 | 87% | LV80-24N-120-I[S] |

## PRODUCT FEATURES

- Short circuit and overload protection
- Over temperature protection
- Suitable for dry and damp locations
- Withstanding voltage: I/P – O/P 2kVAC
- Operating temperature range: -40°C to 90°C (measured at Tcase)
- MTBF: 299,000 hours @ 40°C ambient (~70°C case temp)
- Inrush Current: <20A Max @230VAC for Universal input models, cold start 25°C

## APPROVALS

- UL 8750 recognized component
- EN61000-3-2
- EMC: Meets FCC47 CFR Part 15 (Class A) Non-consumer limits
- [S]UL879 SAM approved

## MECHANICAL SPECIFICATIONS: CASE STYLE I

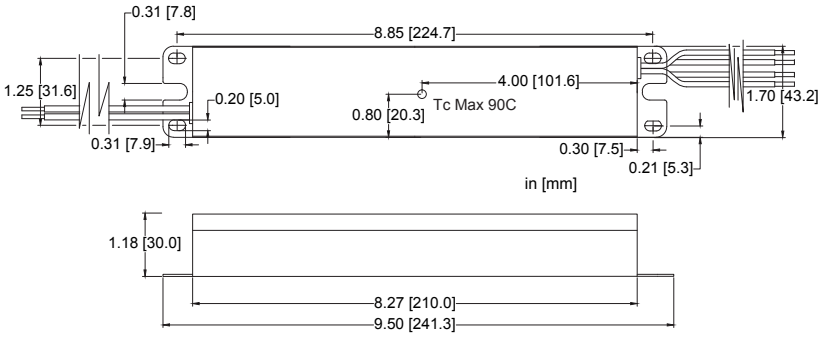


### DIMENSIONS [IN/MM]

| | |
|---|---|
| Length: | 8.85 [224.7] |
| Mounting: | 9.50 [241.3] |
| Width: | 1.70 [43.2] |
| Height: | 1.18 [30.0] |

### WIRING INFORMATION

| | |
|---|---|
| Input: | 12”, Black (L), White (N) #18AWG |
| Output: | 12”, Red (+), Blue (-) #22AWG |

### PACKAGING INFORMATION

| | |
|---|---|
| Weight: | 21.2 oz |
| Quantity: | 30pc/carton |

## WARRANTY

- 5 year limited warranty

# 80W | Constant Voltage Case Style I

## GENERAL INFORMATION

| | |
|---|---|
| **LED Driver Type** | Constant Voltage (Class 2) |
| **Maximum Wattage** | 80 Watts |
| **Input Voltage** | 120 VAC ± 10% Dedicated<br>120 - 277 VAC ± 10% Universal |
| **Input Frequency** | 50/60Hz |
| **Total Harmonic Distortion** | <20% |

## CASE STYLE I: METAL

## PERFORMANCE CURVES

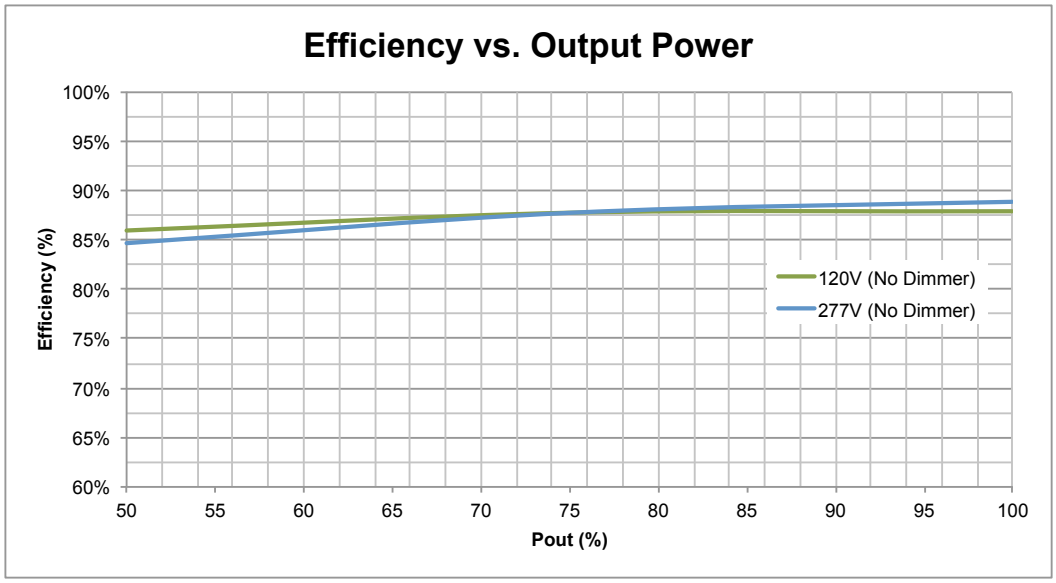


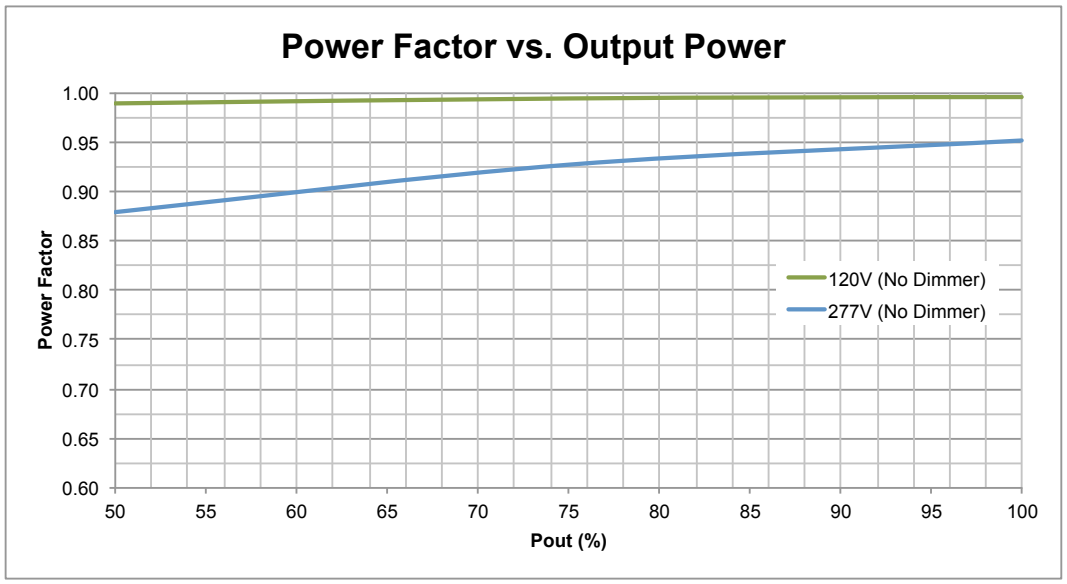


Efficiency and PF measured at 25°C.
Measurements made on model LV80-24N-UNV-I.

# 80W | Constant Voltage Case Style I

## GENERAL INFORMATION

| | |
|---|---|
| **LED Driver Type** | Constant Voltage (Class 2) |
| **Maximum Wattage** | 80 Watts |
| **Input Voltage** | 120 VAC ± 10% Dedicated<br>120 - 277 VAC ± 10% Universal |
| **Input Frequency** | 50/60Hz |
| **Total Harmonic Distortion** | <20% |

## CASE STYLE I: METAL

## PERFORMANCE CURVES

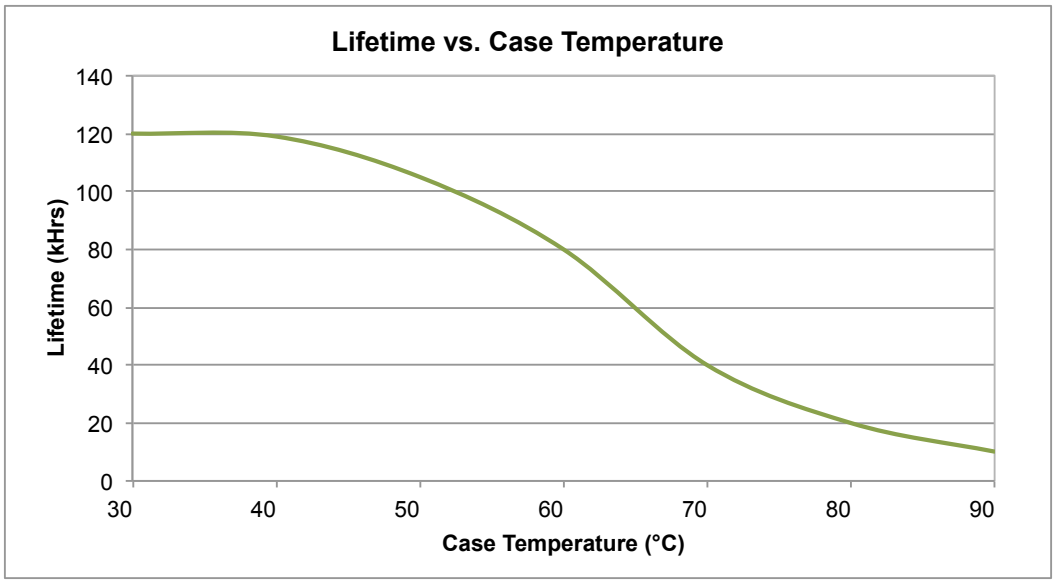


Efficiency and PF measured at 25°C.
Measurements made on model LV80-24N-UNV-I.

# 100W Constant Voltage Case Style I

## GENERAL INFORMATION

| | |
|---|---|
| **LED Driver Type** | Constant Voltage (Class 2) |
| **Maximum Wattage** | 100 Watts |
| **Input Voltage** | 120 - 277 VAC ± 10% Universal |
| **Input Frequency** | 50/60Hz |
| **Total Harmonic Distortion** | <20% |

## CASE STYLE I: METAL

## ELECTRICAL SPECIFICATIONS

| Watts | Output Voltage | Max Output Current | Input Voltage | Input Power | Input Current | Power Factor | Efficiency | Hatch Part Number |
|---|---|---|---|---|---|---|---|---|
| 100W | *12 VDC | 8.34A | 120 - 277 VAC | 114W | 0.96/0.41A | >0.90 | 86% | *LV100-12N-UNV-I[S] |
| | 24 VDC | 4.17A | 120 - 277 VAC | 110W | 0.96/0.41A | >0.90 | 86% | LV100-24N-UNV-I[S] |
| | 36 VDC | 2.75A | 120 - 277 VAC | 111W | 0.99/0.43A | >0.90 | 90% | LV100-36N-UNV-I[S] |

* Non-Class 2

## PRODUCT FEATURES

- Short circuit and overload protection
- Over temperature protection
- Suitable for dry and damp locations
- Withstanding voltage: I/P – O/P 2kVAC
- Operating temperature range: -40°C to 90°C (measured at Tcase)
- MTBF: 258,000 hours @ 40°C ambient (~70°C case temp)

## APPROVALS

- UL 8750 recognized component
- EN61000-3-2
- EMC: Meets FCC47 CFR Part 15 (Class A) Non-consumer limits
- [S]UL879 SAM approved

## MECHANICAL SPECIFICATIONS: CASE STYLE I

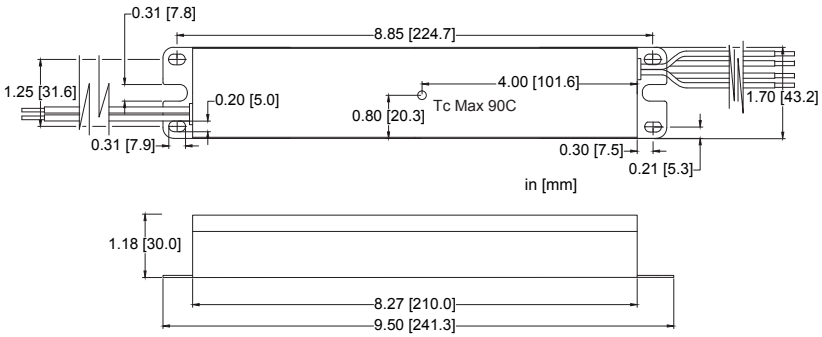


## DIMENSIONS [IN/MM]

| | |
|---|---|
| Length: | 8.85 [224.7] |
| Mounting: | 9.50 [241.3] |
| Width: | 1.70 [43.2] |
| Height: | 1.18 [30.0] |

## WIRING INFORMATION

| | |
|---|---|
| Input: | 12”, Black (L), White (N) #18AWG |
| Output: | 12”, Red (+), Blue (-) #22AWG |

## PACKAGING INFORMATION

| | |
|---|---|
| Weight: | 21.2 oz |
| Quantity: | 30pc/carton |

## WARRANTY

- 5 year limited warranty

## RELATED PRODUCT

- Case Style J: 11.4” x 3.0” x 1.3”

# 100W Constant Voltage Case Style I

## GENERAL INFORMATION

| | |
|---|---|
| **LED Driver Type** | Constant Voltage (Class 2) |
| **Maximum Wattage** | 100 Watts |
| **Input Voltage** | 120 - 277 VAC ± 10% Universal |
| **Input Frequency** | 50/60Hz |
| **Total Harmonic Distortion** | <20% |

## CASE STYLE I: METAL

## PERFORMANCE CURVES

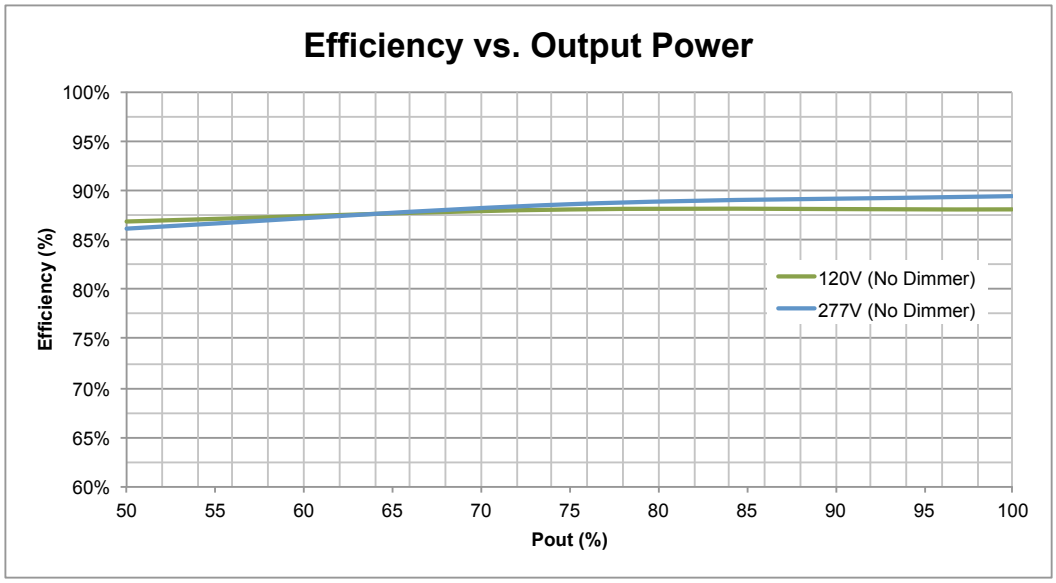


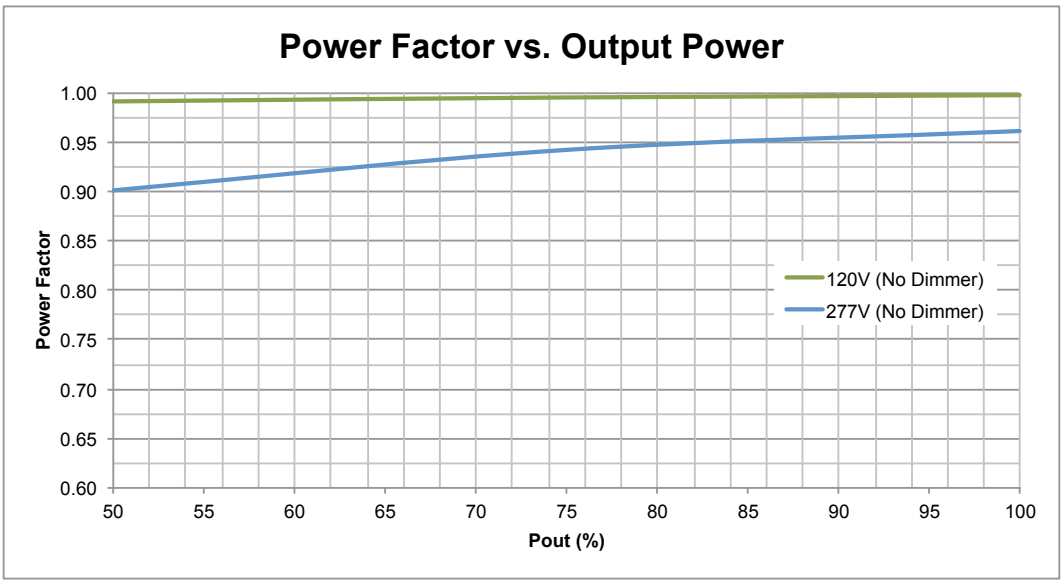


Efficiency and PF measured at 25°C.
Measurements made on model LV100-24N-UNV-I.

# 100W Constant Voltage Case Style I

## GENERAL INFORMATION

| | |
|---|---|
| **LED Driver Type** | Constant Voltage (Class 2) |
| **Maximum Wattage** | 100 Watts |
| **Input Voltage** | 120 - 277 VAC ± 10% Universal |
| **Input Frequency** | 50/60Hz |
| **Total Harmonic Distortion** | <20% |

## CASE STYLE I: METAL

## PERFORMANCE CURVES

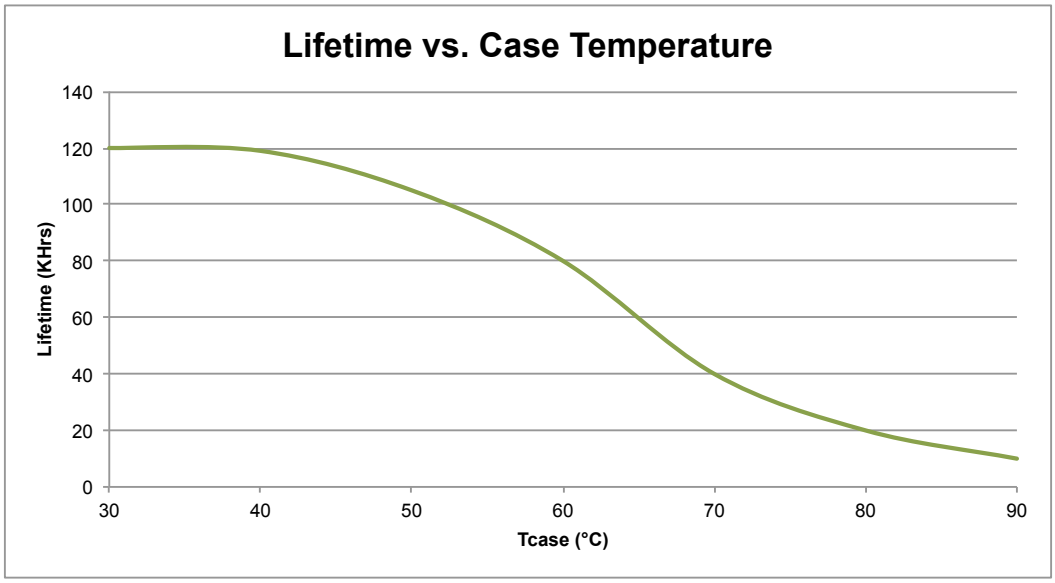


Efficiency and PF measured at 25°C.
Measurements made on model LV100-24N-UNV-I.

# 100W | Constant Voltage Case Style J

## GENERAL INFORMATION

| | |
|---|---|
| **LED Driver Type** | Constant Voltage (Class 2) |
| **Maximum Wattage** | 100 Watts |
| **Input Voltage** | 120 - 277 VAC ± 10% Universal |
| **Input Frequency** | 50/60Hz |
| **Total Harmonic Distortion** | <20% |

## CASE STYLE J: METAL

## ELECTRICAL SPECIFICATIONS

| Watts | Output Voltage | Max Output Current | Input Voltage | Input Power | Input Current | Power Factor | Efficiency | Hatch Part Number |
|---|---|---|---|---|---|---|---|---|
| 100W | 24 VDC | 4.17A | 120 - 277 VAC | 112W | 0.94/0.41A | >0.90 | 86% | LV100-24N-UNV-J |

## PRODUCT FEATURES

- Short circuit and overload protection
- Over temperature protection
- Suitable for dry and damp locations
- Withstanding voltage: I/P – O/P 2kVAC
- Minimum start temp: -30°C
- Inrush Current: <20A Max @230VAC, cold start 25°C

## APPROVALS

- UL 8750 listed component
- EN61000-3-2
- EMC: Meets FCC47 CFR Part 15 (Class B) consumer limits

## MECHANICAL SPECIFICATIONS: CASE STYLE J

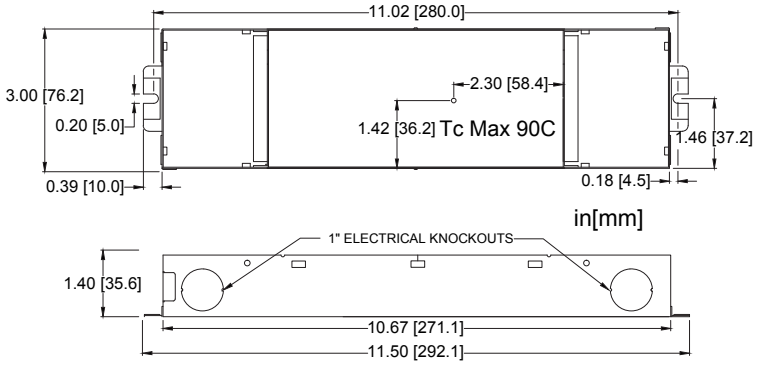


## DIMENSIONS [IN/MM]

| | |
|---|---|
| Length: | 10.67 [271.1] |
| Mounting: | 11.50 [292.1] |
| Width: | 3.00 [76.2] |
| Height: | 1.40 [35.6] |

## WIRING INFORMATION

| | |
|---|---|
| Input: | 12”, Black (L), White (N) #18AWG |
| Output: | 12”, Red (+), Blue (-) #18AWG |

## PACKAGING INFORMATION

| | |
|---|---|
| Weight: | 39.2 oz |
| Quantity: | 15pc/carton |

## WARRANTY

- 5 year limited warranty

## RELATED PRODUCT

- Case Style I: 9.5” x 1.7” x 1.2”

# 100W | Constant Voltage Case Style J

## GENERAL INFORMATION

| | |
|---|---|
| **LED Driver Type** | Constant Voltage (Class 2) |
| **Maximum Wattage** | 100 Watts |
| **Input Voltage** | 120 - 277 VAC ± 10% Universal |
| **Input Frequency** | 50/60Hz |
| **Total Harmonic Distortion** | <20% |

## CASE STYLE J: METAL

## PERFORMANCE CURVES

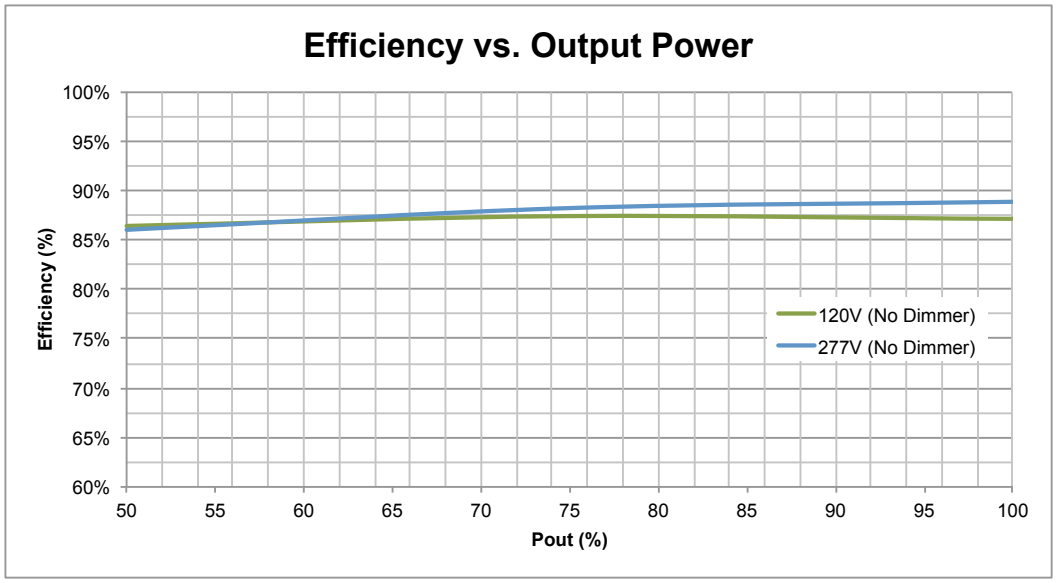


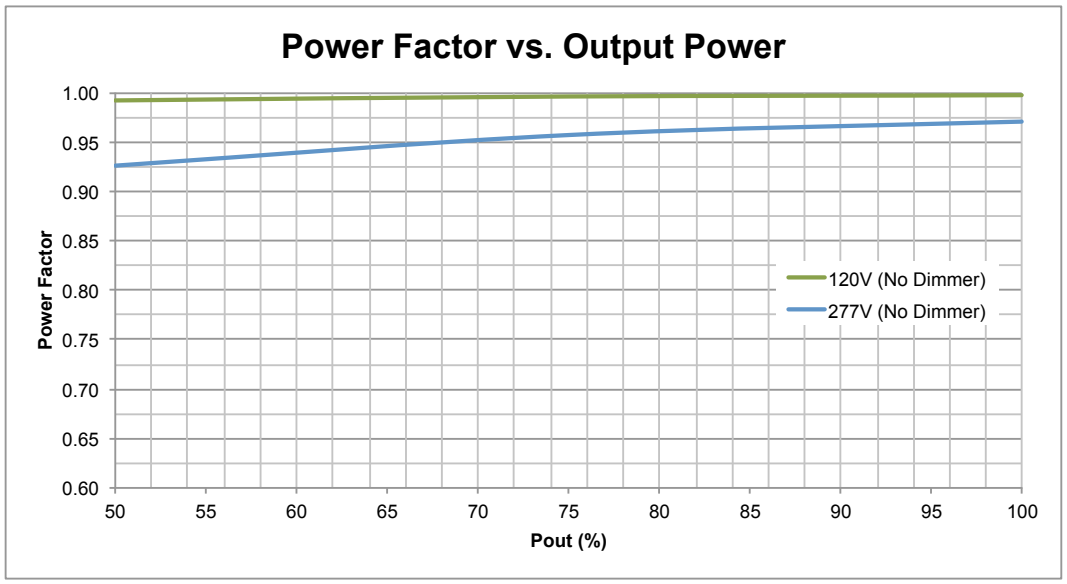


Efficiency and PF measured at 25°C.
Measurements made on model LV100-24N-UNV-J.

# 100W | Constant Voltage Case Style J

## GENERAL INFORMATION

| | |
|---|---|
| **LED Driver Type** | Constant Voltage (Class 2) |
| **Maximum Wattage** | 100 Watts |
| **Input Voltage** | 120 - 277 VAC ± 10% Universal |
| **Input Frequency** | 50/60Hz |
| **Total Harmonic Distortion** | <20% |

## CASE STYLE J: METAL

## PERFORMANCE CURVES

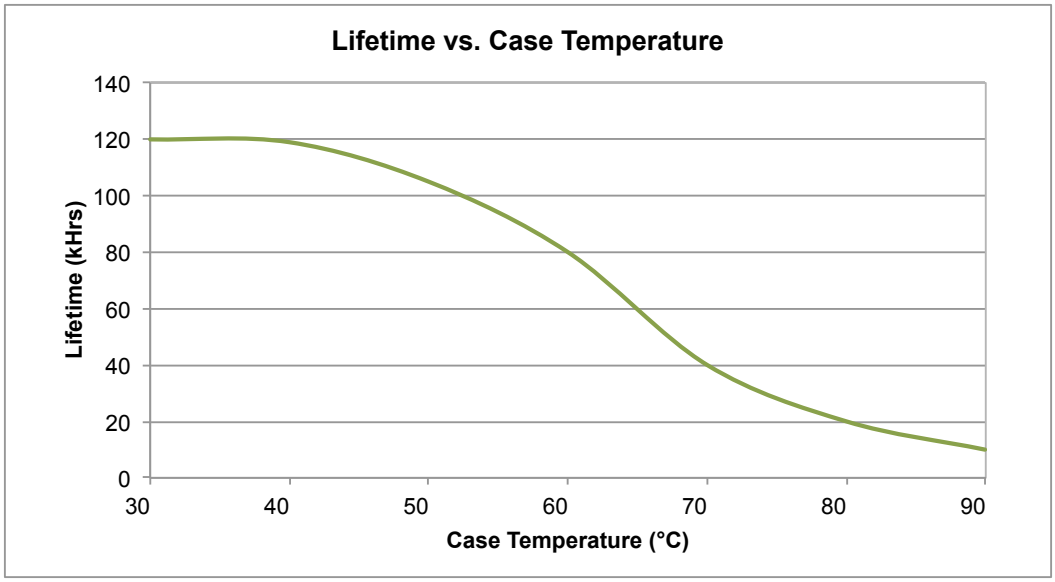


Efficiency and PF measured at 25°C.
Measurements made on model LV100-24N-UNV-J.

# 150W | Constant Voltage Case Style BB

## GENERAL INFORMATION

| | |
|---|---|
| **LED Driver Type** | Constant Voltage (LVLE) |
| **Maximum Wattage** | 150 Watts |
| **Input Voltage** | 120 - 277 VAC ± 10% Universal |
| **Input Frequency** | 50/60Hz |
| **Total Harmonic Distortion** | <20% |

## CASE STYLE BB: METAL

## ELECTRICAL SPECIFICATIONS

| Watts | Output Voltage | Max Output Current | Input Voltage | Input Power | Input Current | Power Factor | Efficiency | Hatch Part Number |
|---|---|---|---|---|---|---|---|---|
| 150W | 24 VDC | 6.25A | 120 - 277 VAC | 169W | 1.48/0.66A | >0.99 | 95% | LV150-24N-UNV-BB |

## PRODUCT FEATURES

- Short circuit and overload protection
- Over temperature protection
- Suitable for dry and damp locations
- Withstanding voltage: I/P – O/P 2kVAC
- Surge voltage rating: L-N 2kV, L/N-G 4kV
- Operating temperature range: -40°C to 90°C (measured at Tcase)
- MTBF: 182,000 hours @ 40°C ambient (~70°C case temp)
- Inrush Current: <40A Max @230VAC, cold start 25°C

## APPROVALS

- UL 8750 recognized component
- EN61000-3-2
- EMC: Meets FCC47 CFR Part 15 (Class B) consumer limits

TYPE HL TYPE TL

## MECHANICAL SPECIFICATIONS: CASE STYLE BB

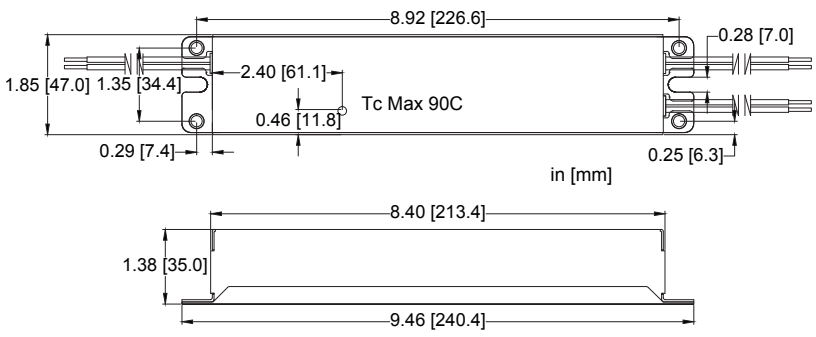


### DIMENSIONS [IN/MM]

| | |
|---|---|
| Length: | 8.92 [226.6] |
| Mounting: | 9.46 [240.4] |
| Width: | 1.85 [47.0] |
| Height: | 1.38 [35.0] |

### WIRING INFORMATION

| | |
|---|---|
| Input: | 12”, Black (L), White (N) #18AWG |
| Output: | 12”, Red (+), Blue (-) #18AWG |

### PACKAGING INFORMATION

| | |
|---|---|
| Weight: | 22.9 oz |
| Quantity: | 25pc/carton |

## WARRANTY

- 5 year limited warranty

## RELATED PRODUCT

- Case Style L: 9.0” x 2.7” x 1.5”

# 150W | Constant Voltage Case Style BB

## GENERAL INFORMATION

| | |
|---|---|
| **LED Driver Type** | Constant Voltage (LVLE) |
| **Maximum Wattage** | 150 Watts |
| **Input Voltage** | 120 - 277 VAC ± 10% Universal |
| **Input Frequency** | 50/60Hz |
| **Total Harmonic Distortion** | <20% |

## CASE STYLE BB: METAL

## PERFORMANCE CURVES

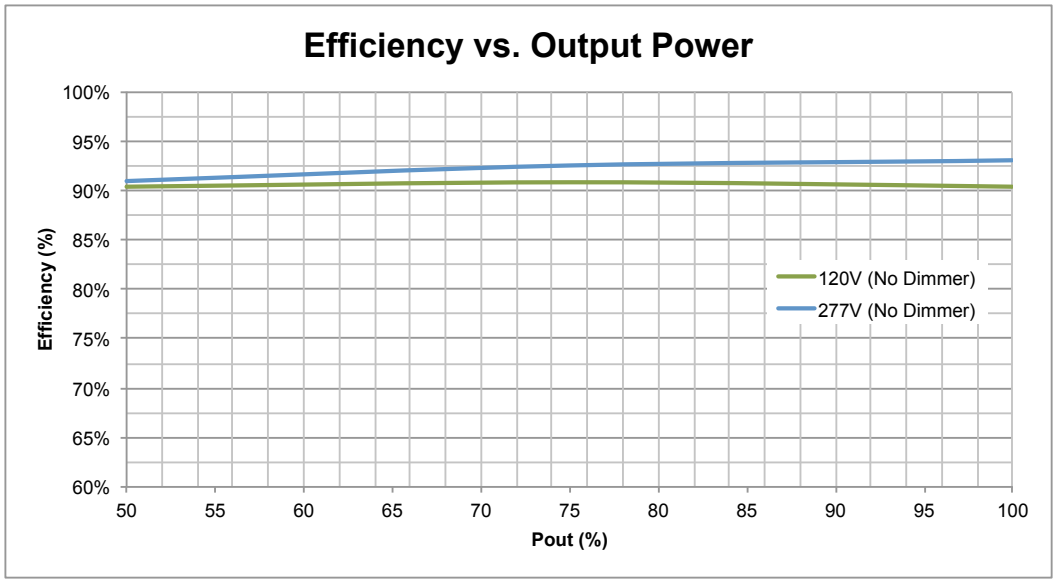


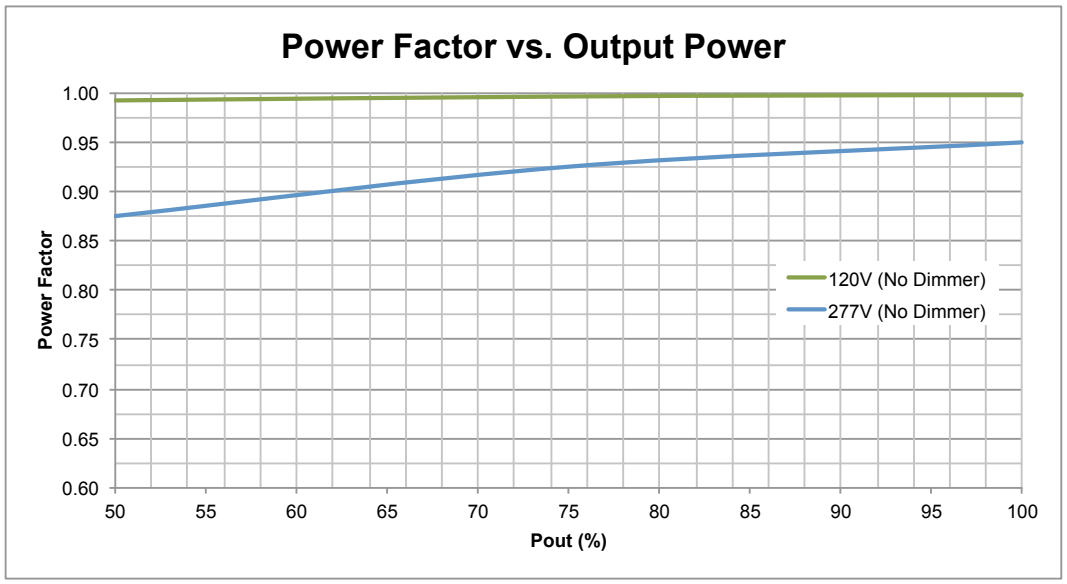


Efficiency and PF measured at 25°C.
Measurements made on model LV150-24N-UNV-BB.

# 150W | Constant Voltage Case Style BB

## GENERAL INFORMATION

| | |
|---|---|
| **LED Driver Type** | Constant Voltage (LVLE) |
| **Maximum Wattage** | 150 Watts |
| **Input Voltage** | 120 - 277 VAC ± 10% Universal |
| **Input Frequency** | 50/60Hz |
| **Total Harmonic Distortion** | <20% |

## CASE STYLE BB: METAL

## PERFORMANCE CURVES

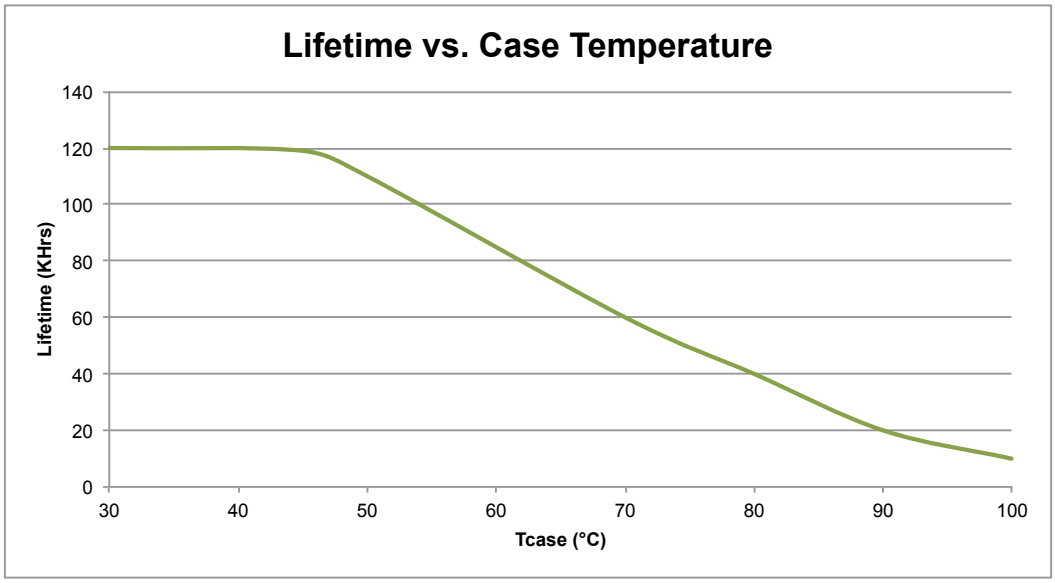


Efficiency and PF measured at 25°C.
Measurements made on model LV150-24N-UNV-BB.

# 150W Constant Voltage Case Style L

## GENERAL INFORMATION

| | |
|---|---|
| **LED Driver Type** | Constant Voltage (LVLE) |
| **Maximum Wattage** | 150 Watts |
| **Input Voltage** | 120 - 277 VAC ± 10% Universal |
| **Input Frequency** | 50/60Hz |
| **Total Harmonic Distortion** | <20% |

## CASE STYLE L: METAL

## ELECTRICAL SPECIFICATIONS

| Watts | Output Voltage | Max Output Current | Input Voltage | Input Power | Input Current | Power Factor | Efficiency | Hatch Part Number |
|---|---|---|---|---|---|---|---|---|
| 150W | 24 VDC | 6.25A | 120 - 277 VAC | 169W | 1.48/0.66A | >0.99 | 95% | LV150-24N-UNV-L |

## PRODUCT FEATURES

- Short circuit and overload protection
- Over temperature protection
- Suitable for dry and damp locations
- Withstanding voltage: I/P – O/P 2kVAC
- Operating temperature range: -40°C to 90°C (measured at Tcase)
- MTBF: 182,000 hours @ 40°C ambient (~70°C case temp)
- Inrush Current: <40A Max @230VAC, cold start 25°C

## APPROVALS

- UL 8750 recognized component
- EN61000-3-2
- EMC: Meets FCC47 CFR Part 15 (Class B) consumer limits
- IP67

## MECHANICAL SPECIFICATIONS: CASE STYLE L

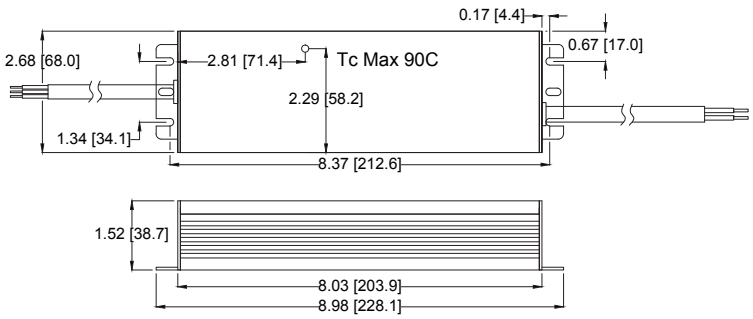


## DIMENSIONS [IN/MM]

| | |
|---|---|
| Length: | 8.03 [203.9] |
| Mounting: | 8.98 [228.1] |
| Width: | 2.68 [68.0] |
| Height: | 1.52 [38.7] |

## WIRING INFORMATION

| | |
|---|---|
| Input: | 12”, Type SJTW Cable, Black (L), White (N), Green (G) #18AWG |
| Output: | 12”, Type SJTW Cable, Red (+), Blue (-) #18AWG |

## PACKAGING INFORMATION

| | |
|---|---|
| Weight: | 34.3 oz |
| Quantity: | 20pc/carton |

## WARRANTY

- 5 year limited warranty

## RELATED PRODUCT

- Case Style BB: 8.9” x 1.8” x 1.4”

# 150W | Constant Voltage Case Style L

## GENERAL INFORMATION

| | |
|---|---|
| **LED Driver Type** | Constant Voltage (LVLE) |
| **Maximum Wattage** | 150 Watts |
| **Input Voltage** | 120 - 277 VAC ± 10% Universal |
| **Input Frequency** | 50/60Hz |
| **Total Harmonic Distortion** | <20% |

## CASE STYLE L: METAL

## PERFORMANCE CURVES

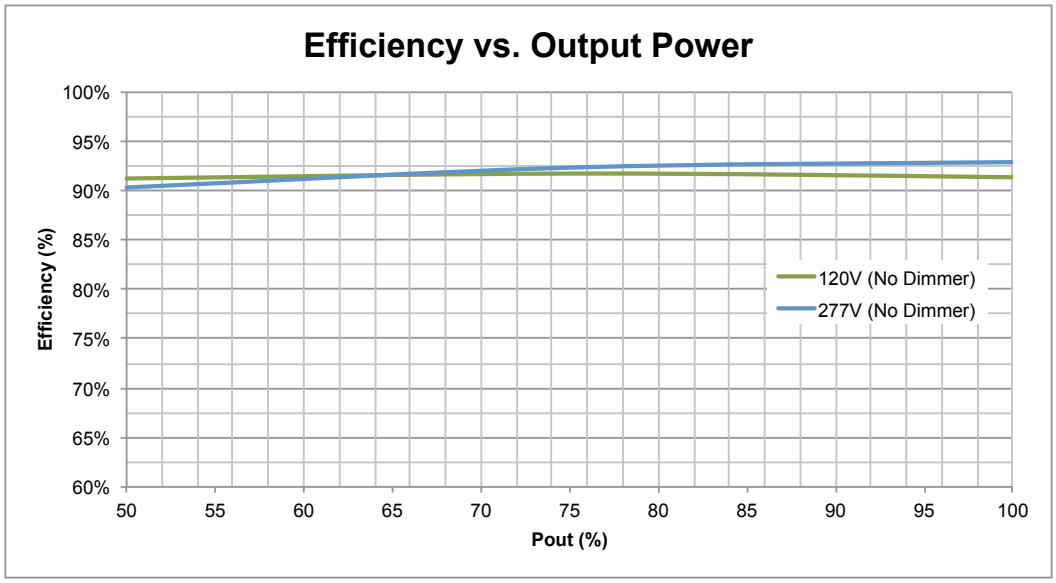


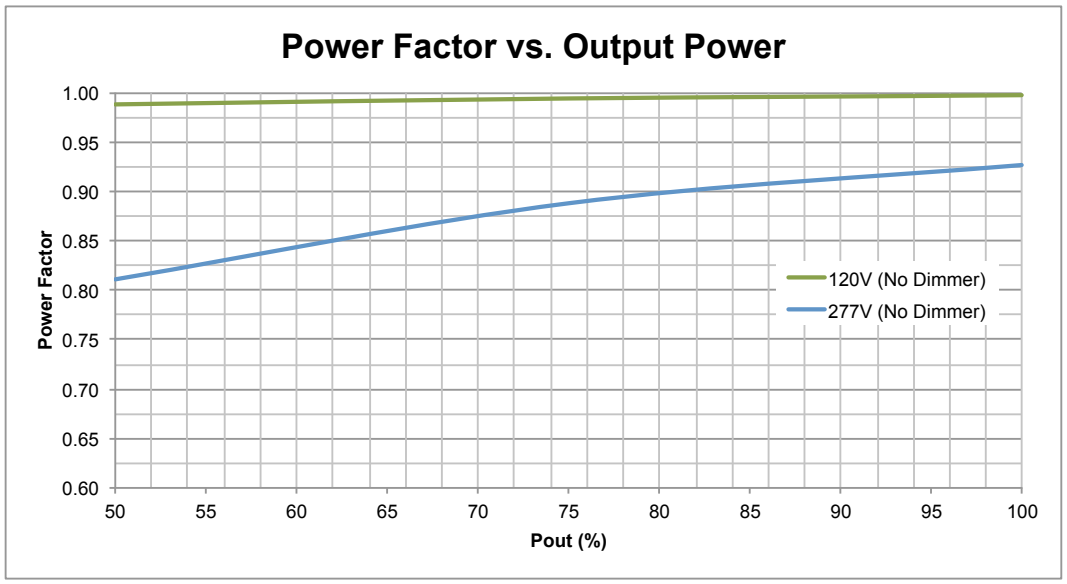


Efficiency and PF measured at 25°C.
Measurements made on model LV150-24N-UNV-L.

# 192W | Constant Voltage Case Style NN

## GENERAL INFORMATION

| | |
|---|---|
| **LED Driver Type** | Constant Voltage |
| **Maximum Wattage** | 192 Watts |
| **Input Voltage** | 120 - 277 VAC ± 10% Universal<br>480 VAC ± 10% Dedicated |
| **Input Frequency** | 50/60Hz |
| **Total Harmonic Distortion** | <20% |

## CASE STYLE NN: METAL

## ELECTRICAL SPECIFICATIONS

| Watts | Output Voltage | Max Output Current | Input Voltage | Input Power | Input Current | Power Factor | Efficiency | Hatch Part Number |
|---|---|---|---|---|---|---|---|---|
| 192W | *24 VDC | 8.00A | 120 - 277 VAC | 208W | 1.74/0.75A | >0.99 | 92% | *LV192-24N-UNV-NN |
| | 24 VDC | 8.00A | 480 VAC | 205W | 0.45A | >0.96 | 94% | LV192-24N-480-NN |

* LVLE

## PRODUCT FEATURES

- Short circuit and overload protection
- Over temperature protection
- Suitable for dry, damp and wet locations
- Withstanding voltage: I/P – O/P 2kVAC
- Operating temperature range: -40°C to 90°C (measured at Tcase)
- MTBF: 162,000 hours @ 40°C ambient (~70°C case temp)

## APPROVALS

- UL 8750 recognized component
- EN61000-3-2
- EMC: Meets FCC47 CFR Part 15 (Class B) consumer limits
- IP67

## MECHANICAL SPECIFICATIONS: CASE STYLE NN

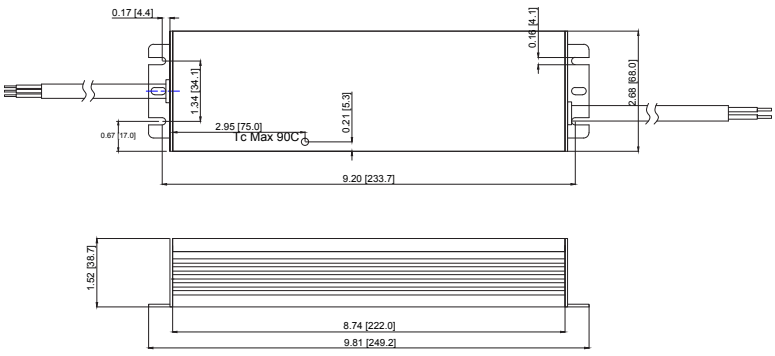


## DIMENSIONS [IN/MM]

| | |
|---|---|
| Length: | 8.74 [222.0] |
| Mounting: | 9.81 [249.2] |
| Width: | 2.68 [68.0] |
| Height: | 1.52 [38.7] |

## WIRING INFORMATION

| | |
|---|---|
| Input: | Type SJTW, 12”, Black (L), White (N) Green (GND) #18AWG |
| Output: | Type SJTW, 12”, Red (+), Black (-) #14AWG |

## PACKAGING INFORMATION

| | |
|---|---|
| Weight: | 40oz |
| Quantity: | 20pc/carton |

## WARRANTY

- 5 year limited warranty

# 300W | Constant Voltage Case Style GG

## GENERAL INFORMATION

| | |
|---|---|
| **LED Driver Type** | Constant Voltage |
| **Maximum Wattage** | 320 Watts |
| **Input Voltage** | 480 VAC Dedicated ± 10% |
| **Input Frequency** | 50/60Hz |
| **Total Harmonic Distortion** | <20% |

## CASE STYLE GG: METAL

## ELECTRICAL SPECIFICATIONS

| Watts | Output Voltage | Max Output Current | Input Voltage | Input Power | Input Current | Power Factor | Efficiency | Hatch Part Number |
|---|---|---|---|---|---|---|---|---|
| 300W | 24 VDC | 12.5A | 480 VAC | 320 W | 0.67 A | 0.95 | 94% | LV300-24N-480-GG |

## PRODUCT FEATURES

- Short circuit and overload protection
- Over temperature protection
- Suitable for dry, damp and wet locations
- Withstanding voltage: I/P – O/P 2kVAC
- Operating temperature range: -40°C to 90°C (measured at Tcase)
- MTBF: TBD

## APPROVALS

- UL 8750 recognized component
- EN61000-3-2
- EMC: Meets FCC47 CFR Part 15 (Class B) consumer limits
- IP67

## MECHANICAL SPECIFICATIONS: CASE STYLE GG

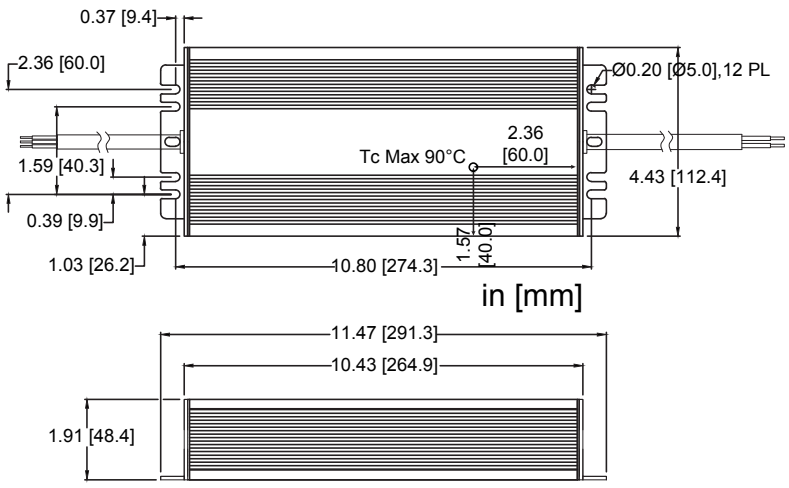


## DIMENSIONS [IN/MM]

| | |
|---|---|
| Length: | 10.43 [264.9] |
| Mounting: | 11.47 [291.3] |
| Width: | 4.43 [112.4] |
| Height: | 1.91 [48.4] |

## WIRING INFORMATION

| | |
|---|---|
| Input: | Type SJTW, 12”, Black (L), White (N) Green (GND) #18AWG |
| Output: | Type SJTW, 12”, Red (+), Black (-) #14AWG |

## PACKAGING INFORMATION

| | |
|---|---|
| Weight: | 78 oz |
| Quantity: | 6 pc/carton |

## WARRANTY

- 5 year limited warranty

# 8W·12W

# hatch™ LED DRIVERS

| | |
|---|---|
| **Emergency LED Driver Type** | Adjustable Output **(Constant Current)** |
| **Input Voltage** | 120-277VAC Nominal, 50/60Hz |
| **Emergency Operation** | 90 Minutes |
| **Battery** | High Temp Nickel-Cadmium<br>24 Hour Recharge<br>7-10 Year Life Expectancy |

The LED Emergency Driver from Hatch is a UL recognized emergency product featuring 4 different output configurations for customization. The Emergency driver allows an LED fixture to be used for normal and emergency operation when used in conjunction with a switched or un-switched AC LED driver. The Emergency driver can ALSO be used in an emergency only fixture which would not require an AC LED Driver to operate. In the event of a power failure, the LED Emergency driver switches to emergency mode and operates the fixture for a minimum of 90 minutes.

| Watts | Rotary Switch | Rated Current | Output Voltage | Input Voltage | Input Power | Input Current | Hatch Part Number |
|---|---|---|---|---|---|---|---|
| 8W | 1<br>2<br>3<br>4 | 500mA<br>330mA<br>220mA<br>160mA | 12-16 VDC<br>16-24 VDC<br>24-36 VDC<br>36-48 VDC | 120-277 VAC<br>120-277 VAC<br>120-277 VAC<br>120-277 VAC | 4.8W (max) | 65mA (max) | ELC08-1248-UNV<br>*ELC08-1248-UNV-C |
| 12W | 1<br>2<br>3<br>4 | 750mA<br>500mA<br>330mA<br>250mA | 12-16 VDC<br>16-24 VDC<br>24-36 VDC<br>36-48 VDC | 120-277 VAC<br>120-277 VAC<br>120-277 VAC<br>120-277 VAC | 4.8W (max) | 65mA (max) | ELC12-1248-UNV<br>*ELC12-1248-UNV-C |

*C = Conduit

## FEATURES:

- Four Output Configurations
- Class 2 Output US
- Long Life High Temperature Recyclable Ni-Cad Battery
- **Includes Test Switch and Charge Indicator Accessory Kit**
- For Use With Switched or Un-switched Fixtures
- Meets or Exceeds All National Electrical Code and Life Safety Code Emergency Lighting Requirements
- Operating Temp: 0º to 50ºC
- Suitable for dry or damp locations
- For use with surface mount or recessed type IC or Non-IC products listed to UL Standards

## CERTIFICATIONS:

c UL us

**For Factory Installation**

RoHS COMPLIANT

## APPLICATIONS:

- Emergency Only Fixtures
- In Conjunction with AC Input – **Constant Current** LED Drivers

## WARRANTY:

5 years

# ELC

## PACKAGING INFORMATION

| | |
|---|---|
| Weight: | 3.38 lbs |
| Quantity: | 6 units individually packaged in 1 carton |

## WIRING INFORMATION

| | |
|---|---|
| Input: | 2', Black (L), White (N), Red (Indicator +), Grey (Indicator -), #18AWG, 18" x 1/2" flexible metal conduit |
| Output: | 2', Purple (LED +), Blue (LED -), Brown(AC Driver +), Blue (AC Driver -), #18AWG, 18" x 1/2" flexible metal conduit |

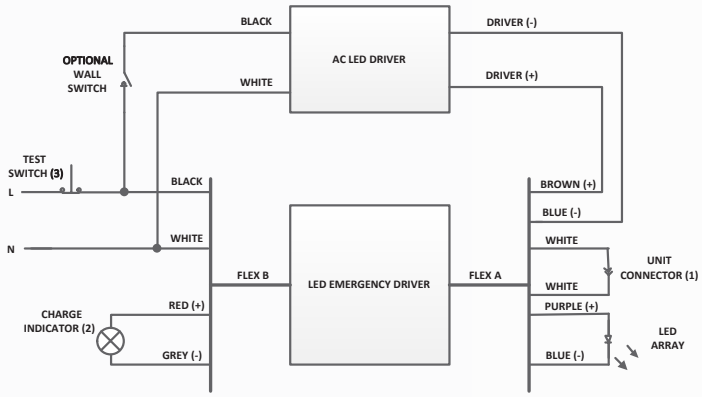


ALTERNATIVE WIRING

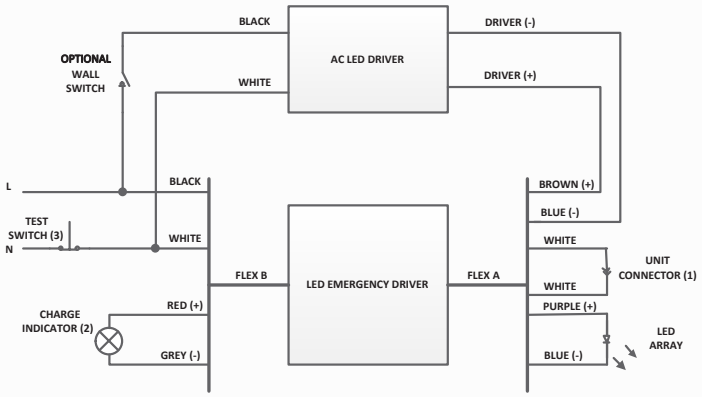


(1) DO NOT MATE CONNECTOR UNTIL INSTALLATION IS COMPLETE AND AC POWER IS SUPPLIED.
(2) CHARGE INDICATOR LEADS ARE POLARITY SENSITIVE.
(3) TEST SWITCH LEADS ARE NOT POLARITY SENSITIVE.

## MECHANICAL SPECIFICATIONS: LED EMERGENCY DRIVER

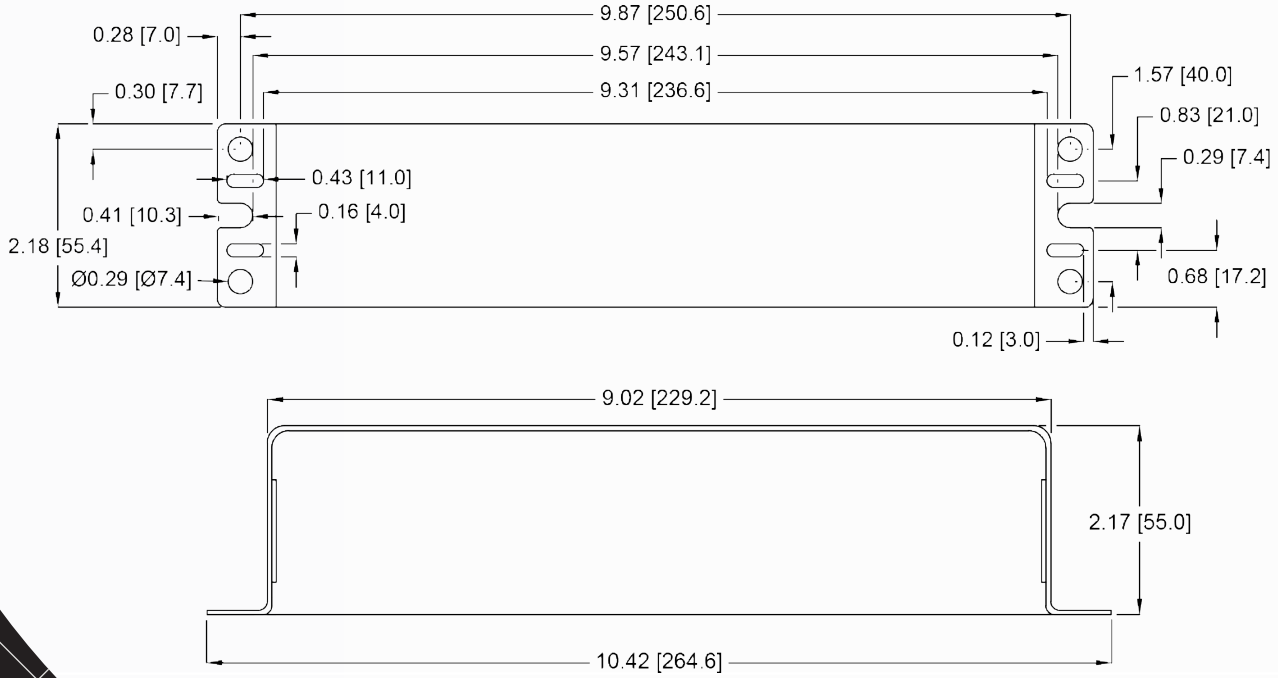


in[mm]

# LED Emergency Driver

## 5W & 12W

| | |
|---|---|
| **Emergency LED Driver Type** | Adjustable Output (Constant Power) |
| **Input Voltage** | 120-277VAC Nominal, 50/60Hz |
| **Emergency Operation** | 90 Minutes |
| **Battery** | High Temp Nickel-Cadmium Mainenance-Free 9.6VDC, 8 Cell |
| **Protections** | Over Voltage Protection<br>Over Current Protection<br>Short Circuit Protection |
| **Recharge Time** | 24 Hours |

The LED Emergency Driver from Hatch is a UL Recognized emergency product. The Emergency driver allows an LED fixture to be used for normal and emergency operation when used in conjunction with a switched or un-switched AC LED Driver. The Emergency Driver can ALSO be used in an emergency only fixture which would not require an AC LED Driver to operate. In the event of a power failure, the LED emergency Driver switches to emergency mode and operates the fixture for a minimum of 90 minutes.

| Max Watts | Input Voltage | Output Voltage | Hatch Part Number |
|---|---|---|---|
| 5W | 120 - 277 VAC | 12 - 39 VDC | ELP05-UNV |
| 12W | 120 - 277 VAC | 12 - 39 VDC | ELP12-UNV |

### ENVIRONMENTAL SPECIFICATIONS

- Operating Temperature: 0 to 55ºC
- Storage Temperature: -20 to 55ºC
- Humidity: 5% to 95%
- Maximum Case Temperature: 90ºC

### WARRANTY:

5 years

### APPLICATIONS:

- Emergency Lighting
- Emergency Only fixtures
- In conjunction with AC input - constant current or constant voltage LED Driver

### FEATURES:

- Long Life High Temperature Recyclable Ni-Cad Battery
- Class 2 Output
- **Includes Test Switch and Charge Indicator Accessory Kit**
- For Use With Switched or Unswitched Fixtures
- Meets or Exceeds All National Electrical Code and Life Safety Code Emergency Lighting Requirements
- Suitable for dry or damp locations
- For use with surface mounts or recessed type IC or Non IC products listed to UL Standards

### CERTIFICATIONS:

- UL 924
- FCC, 47CFR Part 15 (ANSI C63.4:2009 Class B)
- EN61000-3-2 (Harmonic Current Emissions Class C)

## WIRING INFORMATION

| | |
|---|---|
| Input: | 12”, Black (L), White (N) #18AWG |
| Output: | 24”, Red (+), Blue (-) #18AWG |
| | 24”, Brown #20AWG |
| Battery Connection | 24”, Red, Black #18AWG |
| Test Switch Connections | 24”, Red, Blue, Grey #22AWG |

### WIRING DIAGRAMS

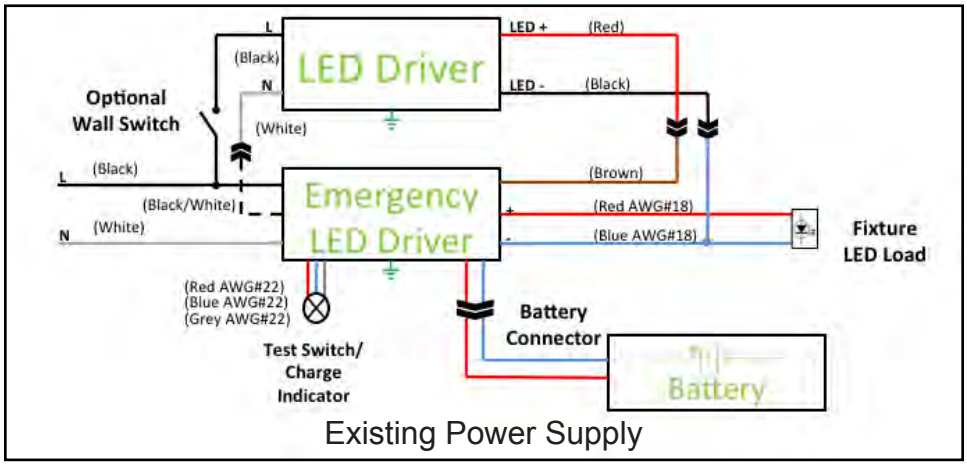


Existing Power Supply

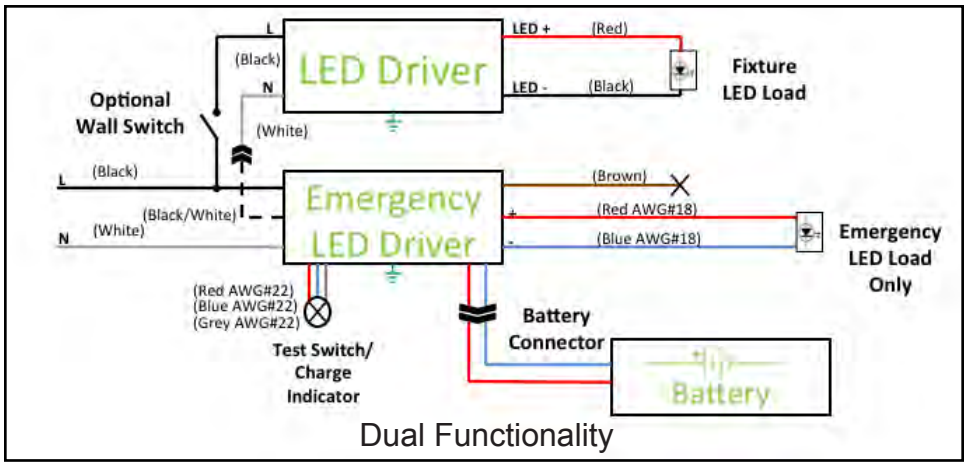


Dual Functionality

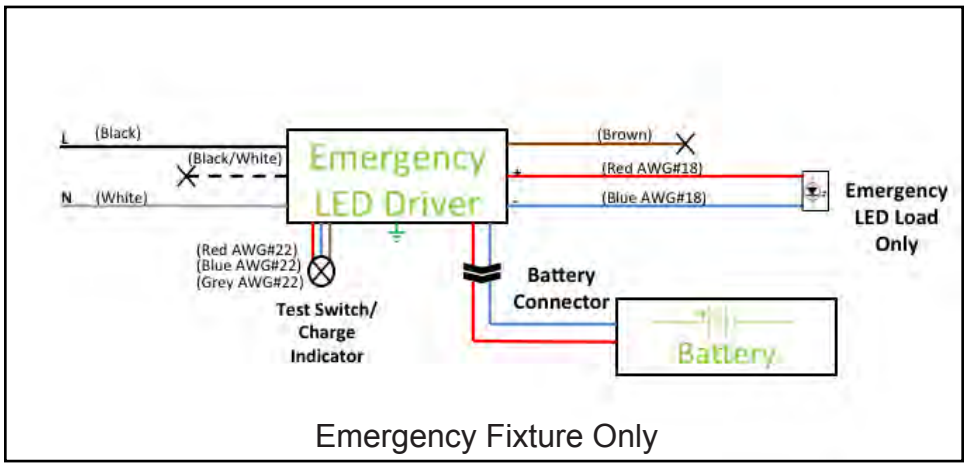


Emergency Fixture Only

## PHYSICAL DIMENSIONS (5W BATTERY)

| | |
|---|---|
| Length: | 8.07” (205mm) |
| Width: | 1.97” (50mm) |
| Height: | 1.01” (26mm) |
| Mounting: | 7.60” (193mm) |

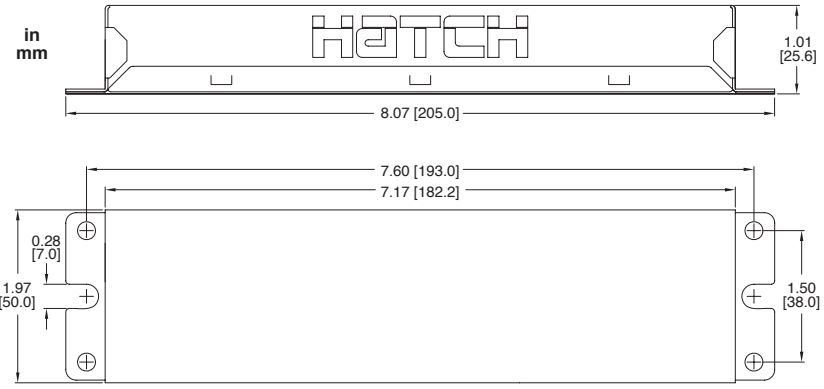


## PHYSICAL DIMENSIONS (12W BATTERY)

| | |
|---|---|
| Length: | 9.45” (240mm) |
| Width: | 2.24” (57mm) |
| Height: | 1.15” (29mm) |
| Mounting: | 8.90” (226mm) |

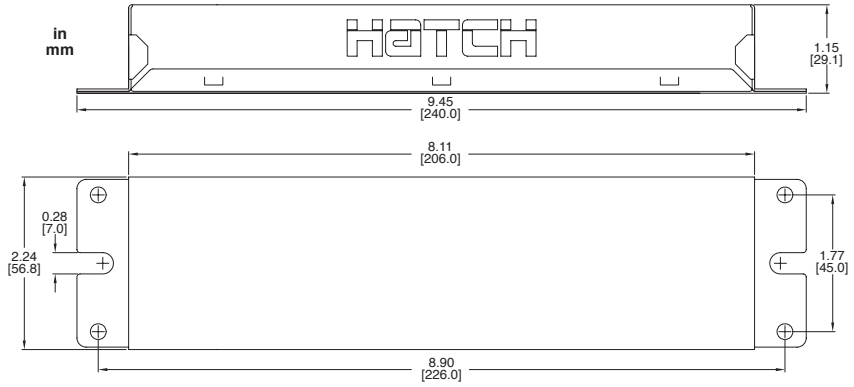


## PHYSICAL DIMENSIONS (EMERGENCY LED DRIVER)

| | |
|---|---|
| Length: | 6.46” (164mm) |
| Width: | 1.37” (35mm) |
| Height: | 1.00” (25mm) |
| Mounting: | 5.99” (152mm) |

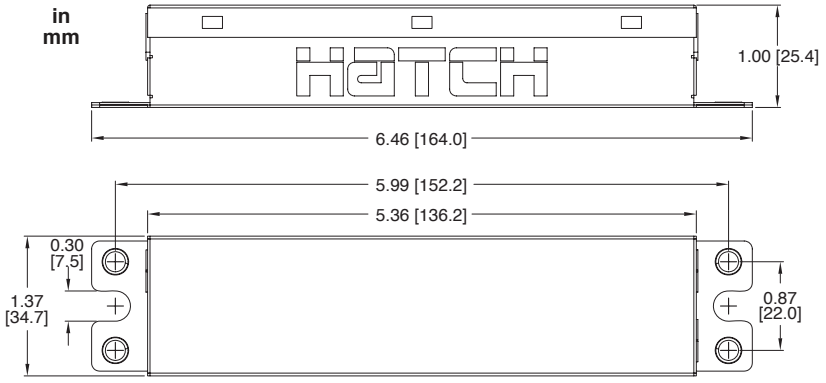

# LED Emergency Driver Kit

## 5W & 12W

| | |
|---|---|
| **Input Voltage** | 120-277VAC Nominal, 50/60Hz |
| **Emergency Operation** | 90 Minutes |
| **Battery** | High Temp Nickel-Cadmium Maintenance-Free 9.6VDC, 8 Cell |
| **Protections** | Over Voltage Protection<br>Over Current Protection<br>Short Circuit Protection |
| **Recharge Time** | 24 Hours |

The LED Emergency Driver Kit from Hatch is UL Classified for **field installation**. The Emergency driver allows any fixture to be used in emergency situations. In the event of a power failure, the LED Emergency driver is activated and operates the LED module for a minimum of 90 minutes.

| Max Watts | Input Voltage | Output Voltage | Nominal Lumen Output | Hatch Part Number |
|---|---|---|---|---|
| 5W | 120 - 277 VAC | 12 - 41 VDC | 500 Lumens | ELP05-UNV-K |
| 12W | 120 - 277 VAC | 12 - 41 VDC | 1200 Lumens | ELP12-UNV-K |

### ENVIRONMENTAL SPECIFICATIONS

- Operating Temperature: 0 to 55ºC
- Storage Temperature: -20 to 55ºC
- Humidity: 5% to 95%
- Maximum Case Temperature: 90ºC

### WARRANTY:

5 years

### APPLICATIONS:

- Emergency Lighting
- LED fixtures using an AC input - constant current or constant voltage LED Driver
- LED fixtures using LED Tubes with internal drivers
- Fluorescent fixtures using a ballast
- Existing or new fixtures

### FEATURES:

- Long Life High Temperature Recyclable Ni-Cad Battery
- Class 2 Output
- **Includes Test Switch and Charge Indicator Accessory Kit**
- For Use With Switched or Unswitched Fixtures
- Meets or Exceeds All National Electrical Code and Life Safety Code Emergency Lighting Requirements
- Suitable for Dry or Damp Locations
- UL Classified for field installation
- Includes installation guide and luminaire modification label
- For use with surface mounts or recessed type IC or Non IC products listed to UL Standards

### CERTIFICATIONS:

RoHS COMPLIANT

FC

CLASSIFIED C UL US

- UL 924
- FCC, 47CFR Part 15 (ANSI C63.4:2009 Class B)
- EN61000-3-2 (Harmonic Current Emissions Class C)

## WIRING INFORMATION

| | |
|---|---|
| Input: | 12”, Black (L), White (N) #18AWG |
| Output: | 24”, Red (+), Blue (-) #18AWG |
| | 24”, Brown #20AWG |
| Battery Connection | 24”, Red, Black #18AWG |
| Test Switch Connections | 24”, Red, Blue, Grey #22AWG |

## WIRING DIAGRAMS

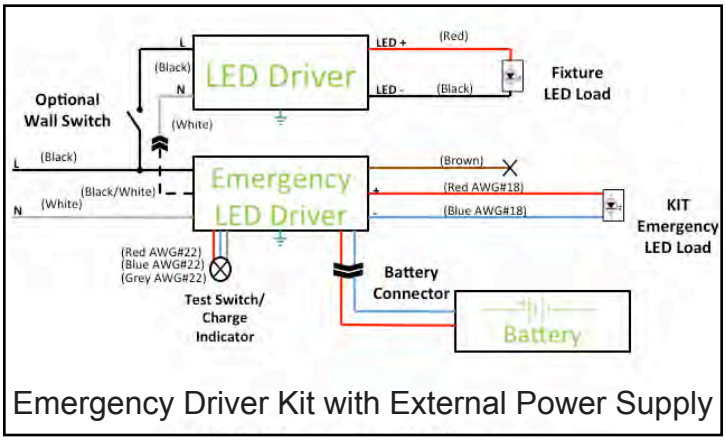


Emergency Driver Kit with External Power Supply

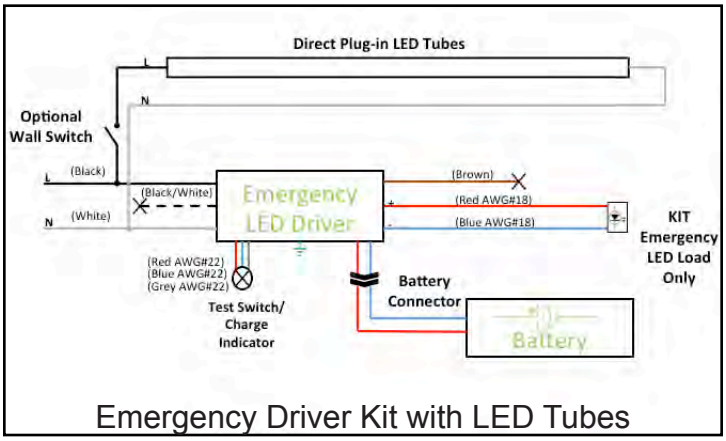


Emergency Driver Kit with LED Tubes

For non-LED fixtures, please use “Emergency Driver Kit with External Power Supply” wiring diagram.

## PHYSICAL DIMENSIONS (EMERGENCY LED DRIVER)

| | |
|---|---|
| Length: | 6.46” (164mm) |
| Width: | 1.37” (35mm) |
| Height: | 1.00” (25mm) |
| Mounting: | 5.99” (152mm) |

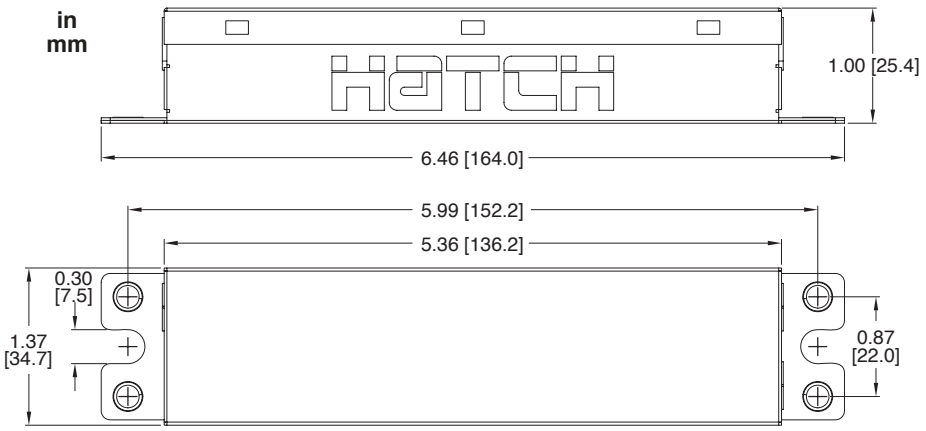

## PHYSICAL DIMENSIONS (5W BATTERY)

| | |
|---|---|
| Length: | 8.07” (205mm) |
| Width: | 1.97” (50mm) |
| Height: | 1.01” (26mm) |
| Mounting: | 7.60” (193mm) |

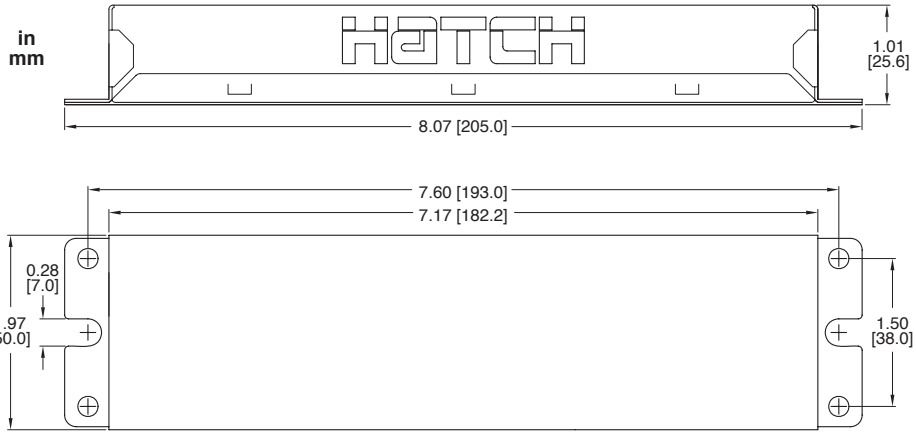


## PHYSICAL DIMENSIONS (12W BATTERY)

| | |
|---|---|
| Length: | 9.45” (240mm) |
| Width: | 2.24” (57mm) |
| Height: | 1.15” (29mm) |
| Mounting: | 8.90” (226mm) |

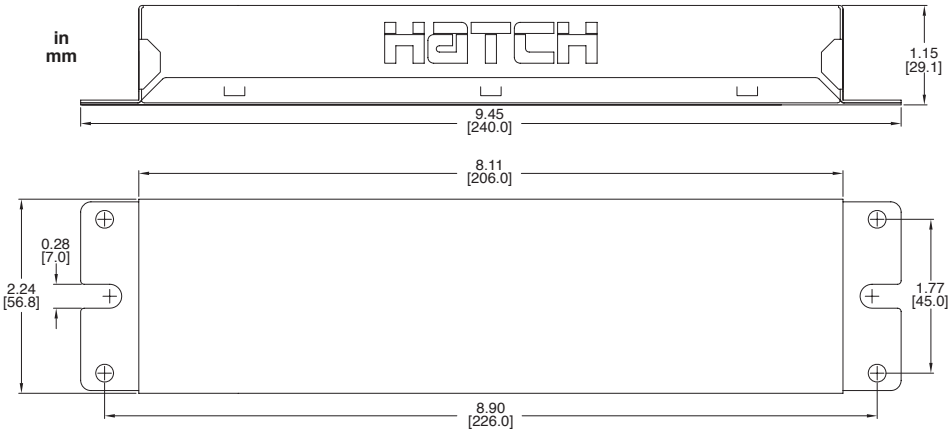


## PHYSICAL DIMENSIONS (MODULES)

| | |
|---|---|
| 5W Module Length: | 5.91” (150mm) |
| 12W Module Length: | 8.66” (220mm) |
| Width: | 0.91” (23mm) |

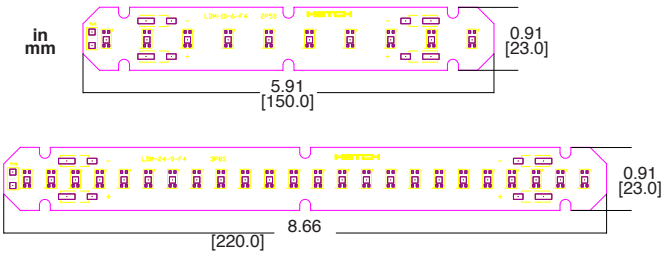

# 16W·32W 34W

HATCH™ LED DRIVERS

I-LOC® TECHNOLOGY
PATENT PENDING

| | |
|---|---|
| LED Driver Type | Adjustable Constant Current |
| Input Voltage | 120-277VAC Nominal, 50/60Hz |
| XAC Dimming | 0-10V Dimming OR<br>Leading & Trailing Edge Dimming @ 120VAC |

Hatch I-LOC® Technology enables quick and easy setting of driver output current with the simple click of a key. Select the appropriate I-LOC® key for the desired output current and click it into the driver. The keys are interchangeable across the HATCH I-LOC® LED Driver product set and have a 50% to maximum output range.

| Driver Factor | Designator | 350mA MAX | 700mA MAX | 1050mA MAX |
|---|---|---|---|---|
| 1.00 | A | 350mA | 700mA | 1050mA |
| 0.98 | B | 343mA | 686mA | 1029mA |
| 0.95 | C | 333mA | 665mA | 998mA |
| 0.93 | D | 326mA | 651mA | 977mA |
| 0.90 | E | 315mA | 630mA | 945mA |
| 0.88 | F | 308mA | 616mA | 924mA |
| 0.85 | G | 298mA | 595mA | 893mA |
| 0.83 | H | 291mA | 581mA | 872mA |
| 0.80 | I | 280mA | 560mA | 840mA |
| 0.78 | J | 273mA | 546mA | 819mA |
| 0.75 | K | 263mA | 525mA | 788mA |
| 0.73 | L | 256mA | 511mA | 767mA |
| 0.70 | M | 245mA | 490mA | 735mA |
| 0.68 | N | 238mA | 476mA | 714mA |
| 0.65 | O | 228mA | 455mA | 683mA |
| 0.63 | P | 221mA | 441mA | 662mA |
| 0.60 | Q | 210mA | 420mA | 630mA |
| 0.58 | R | 203mA | 406mA | 609mA |
| 0.55 | S | 193mA | 385mA | 578mA |
| 0.53 | T | 186mA | 371mA | 557mA |
| 0.50 | U | 175mA | 350mA | 525mA |

Adjusted Output Current
Tolerance +/- 3%

# XAC SERIES LED DRIVER

**Part Number Guide**

| Max. Output (mA) | Max. Power (Watts) | XAC |
|---|---|---|
| 0-10V Dimming | | |
| 350 | 16 | XAC16-0350Z-UNV-I |
| 700 | 32 | XAC32-0700Z-UNV-I |
| 1050 | 34 | XAC34-1050Z-UNV-I |
| Leading & Trailing Edge Dimming | | |
| 350 | 16 | XAC16-0350P-UNV-I |
| 700 | 32 | XAC32-0700P-UNV-I |
| 1050 | 34 | XAC34-1050P-UNV-I |

## FEATURES:

- Short circuit overload & open load protection
- Over voltage & over current protection - auto recovery
- Lifetime 50,000 hrs @ 80°C case temp.
- Class 2 output
- Complies with IEEE C62.41-1991, Class A operation.
- Starts as quickly as 125ms
- Designed to meet FCC Part 15 Class B
- Minimum start temp. -30°C
- NEMA 410 Compliant

Leading & trailing edge
- Dimmable at 120V only
- Dims to zero

0-10V Dimmable
- Dims to 1%

## CERTIFICATIONS:

FC

c UL us

Type TL

## APPLICATIONS:

- Track lighting
- Recessed lighting
- General illumination
- Commercial lighting
- Architectural lighting

## WARRANTY:

5 year limited

## INPUT

| | |
|---|---|
| Power Factor | > 0.90 |
| Total Harmonic Distortion | < 20% |

## OUTPUT

| Dimming Type | Phase | | | 0-10V Dimming | | |
|---|---|---|---|---|---|---|
| Max. Power | 16W | 32W | 34W | 16W | 32W | 34W |
| Current | 350mA | 700mA | 1050mA | 350mA | 700mA | 1050mA |
| Voltage Range | 20-46V | 20-46V | 14-32V | 24-46V | 24-46V | 17-32V |
| Efficiency | >85% | | | >85% | | |
| Max. Case Temp. | 85˚C | | | 85˚C | | |

# 16W·32W 34W

hatch LED DRIVERS™

I-LOC® TECHNOLOGY
PATENT PENDING

| | |
|---|---|
| LED Driver Type | Adjustable Constant Current |
| Input Voltage | 120-277VAC Nominal, 50/60Hz |
| XAC Dimming | 0-10V Dimming OR<br>Leading & Trailing Edge Dimming @ 120VAC |

Hatch **XAC** series leading & trailing edge dimmable LED driver products are suitable for use with most incandescent (leading edge) and electronic low voltage (trailing edge) dimming products. Dims to zero.

**XAC** I-LOC 0-10V dimming drivers dim to 1%. When the driver factor is adjusted with a new key the driver dims to 1% of the new adjusted output current.

## MECHANICAL SPECIFICATIONS: I-LOC CASE STYLE XAC

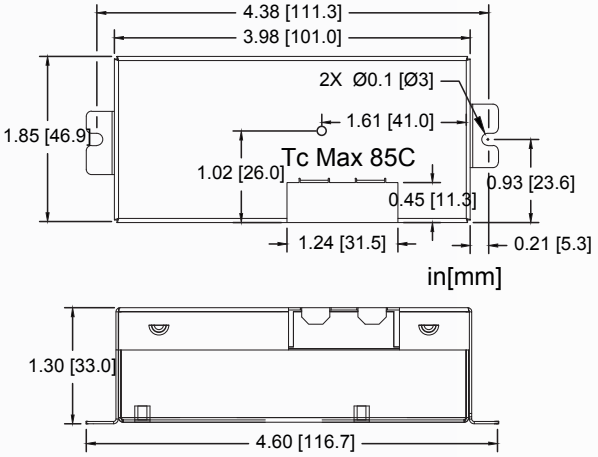


Always confirm fit with a physical sample
Specifications subject to change

## WIRING INFORMATION

| | |
|---|---|
| Input: | 6", Black (L), White (N) #18AWG |
| Output: | 6", Red (+), Black/White (-) #24AWG |
| Dimming: | 6", Purple (+), Grey (-) # 24AWG |

## PACKAGING INFORMATION

| | |
|---|---|
| Weight: | 9.1oz |
| Quantity: | 50pc/carton |

# 16W·32W 34W

hatch LED DRIVERS™

I-LOC® TECHNOLOGY
PATENT PENDING

| | |
|---|---|
| LED Driver Type | Adjustable Constant Current |
| Input Voltage | 120-277VAC Nominal, 50/60Hz |
| XAC Dimming | Leading & Trailing Edge Dimming @ 120VAC |

Hatch **XAC** series leading & trailing edge dimmable LED driver products are suitable for use with most incandescent (leading edge) and electronic low voltage (trailing edge) dimming products. Dims to zero.

## INRUSH CHARACTERISTICS

### PHASE DIMMING

| Max Output | Vin | Ipk | T (50% Ipk) |
|---|---|---|---|
| 350mA | 120V | 0.58A | 59µs |
| | 277V | 1.18A | 52µs |
| 700mA | 120V | 0.88A | 50µs |
| | 277V | 1.36A | 94µs |
| 1050mA | 120V | 0.74A | 63µs |
| | 277V | 1.28A | 95µs |

### 0-10V DIMMING

| Max Output | Vin | Ipk | T (50% Ipk) |
|---|---|---|---|
| 350mA | 120V | 1.70A | 32µs |
| | 277V | 2.76A | 33µs |
| 700mA | 120V | 3.75A | 37µs |
| | 277V | 4.30A | 58µs |
| 1050mA | 120V | 3.74A | 36µs |
| | 277V | 4.03A | 57µs |

# ADJUSTABLE CONSTANT CURRENT LED DRIVER
# XEC85 PROGRAMMABLE SPECIFICATIONS SHEET

## ELECTRICAL SPECIFICATIONS

| *Input* | | |
|---|---|---|
| Input Voltage (VAC) | 120-277V (+/-10%) | |
| Frequency Range (Hz) | 50-60Hz | |
| | **120V** | **277V** |
| Input Current (A) | TBD | TBD |
| THD @ Full Load | <20% | <20% |
| Power Factor @ Full Load | >0.90 | >0.90 |
| Efficiency @ Full Load | >85% | >85% |
| Inrush Current (Apk) | TBD | TBD |
| *Output* | | |
| Output Current (mA) | 728 - 2600mA | |
| Output Voltage (VDC) | 20 - 55V | |
| Output Ripple Current | TBD | |
| Maximum Output Power (W) | 85W | |
| LED Power Up Time | <1sec | |
| Load Regulation | TBD | |
| Line Regulation | TBD | |
| Over Voltage Protection | Yes, Auto Recovery | |
| Over Load Protection | Yes, Auto Recovery | |
| Output Short-Circuit Protection | Yes | |

## GENERAL INFORMATION

| | |
|---|---|
| Order Numbers | XEC85-2600Z-UNV-I |
| Type | Constant Current |
| Output Power | 85W (Maximum) |
| Programming Method | I-LOC Keys |

## DIMMING

| | |
|---|---|
| Dimming Control | 0-10V Dimming |
| Dimming Range | Dims to 1% (XEC85-2600Z-UNV-I) |
| Dim Output | TBD |
| Dimming Input Isolation | TBD |
| Source/Sink Current | TBD |

## ENVIRONMENTAL SPECIFICATIONS

| | |
|---|---|
| Minimum Operating Temperature | TBD |
| Maximum Case Temperature (Tc) | TBD |
| Maximum Storage Temperature | TBD |
| Maximum Relative Humidity (%) | TBD |
| Transient Protection | NEMA SSL1-2010 Non-Roadway 2.5kV |
| UL Environment Rating | Dry & Damp |
| UL File Number | TBD |
| EMI Compliance | FCC Part 15 Class A |
| Sound Rating | Class A |

# PRELIMINARY

## WIRING

| | |
|---|---|
| Input: | Terminals<br>Black (L), White (N), Green (G) |
| Output: | Terminals<br>Red (+), Black (-) |
| Dimming: | Terminals<br>Purple (+), Grey (-) |
| *Use solid copper wire only (16-24 AWG)<br>Strip length 3/8” | |

## DIMENSIONS

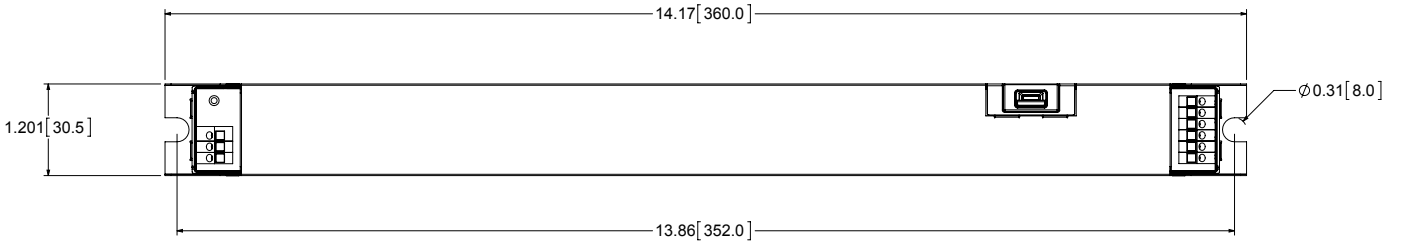


in [mm]

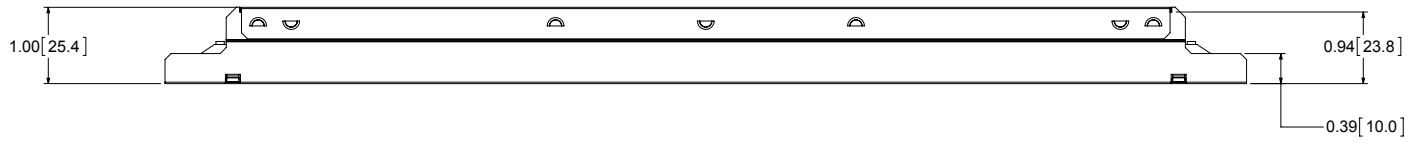


Always confirm fit with a physical sample.
Specifications subject to change.

| PACKAGING INFORMATION | |
|---|---|
| Weight: | TBD |
| Quantity: | TBD |

## PROGRAMMABILITY

Hatch I-LOC Technology enables quick and easy setting of driver output current with the simple click of a key. Select the appropriate I-LOC key for the desired output current and click it into the driver. The keys are interchangeable across the Hatch I-LOC LED Driver Linear product family and have a 28% to maximum output range.

| Drive Factor | Part Number | 2600mA Max |
|---|---|---|
| 1.00 | XA100 | 2600mA |
| 0.98 | XB098 | 2548mA |
| 0.95 | XC095 | 2470mA |
| 0.93 | XD093 | 2418mA |
| 0.90 | XE090 | 2340mA |
| 0.88 | XF088 | 2288mA |
| 0.85 | XG085 | 2210mA |
| 0.83 | XH083 | 2158mA |
| 0.80 | XI080 | 2080mA |
| 0.78 | XJ078 | 2028mA |
| 0.75 | XK075 | 1950mA |
| 0.73 | XL073 | 1898mA |
| 0.70 | XM070 | 1820mA |
| 0.68 | XN068 | 1768mA |
| 0.65 | XO065 | 1690mA |

| Drive Factor | Part Number | 2600mA Max |
|---|---|---|
| 0.63 | XP063 | 1638mA |
| 0.60 | XQ060 | 1560mA |
| 0.58 | XR058 | 1508mA |
| 0.55 | XS055 | 1430mA |
| 0.53 | XT053 | 1378mA |
| 0.50 | XU050 | 1300mA |
| 0.48 | XLA048 | 1248mA |
| 0.45 | XLB045 | 1170mA |
| 0.43 | XLC043 | 1118mA |
| 0.40 | XLD040 | 1040mA |
| 0.38 | XLE038 | 988mA |
| 0.35 | XLF035 | 910mA |
| 0.33 | XLG033 | 858mA |
| 0.30 | XLH030 | 780mA |
| 0.28 | XLI028 | 728mA |

Adjusted Output Current
Tolerance +/- 3%

## OPERATING RANGE

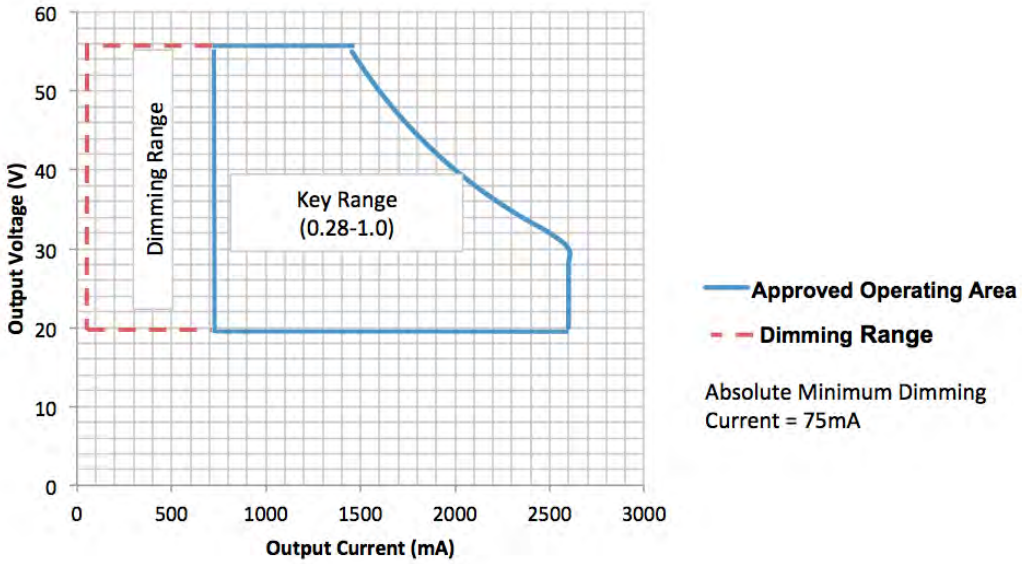


## DIMMING

I-LOC Linear 85W driver dims to 1% of the adjusted output current.

# ADJUSTABLE CONSTANT CURRENT LED DRIVER
# XLC30 PROGRAMMABLE SPECIFICATIONS SHEET

## ELECTRICAL SPECIFICATIONS

| *Input* | | |
|---|---|---|
| Input Voltage (VAC) | 120-277V (+/-10%) | |
| Frequency Range (Hz) | 50-60Hz | |
| | **120V** | **277V** |
| Input Current (A) | TBD | TBD |
| THD @ Full Load | <20% | <20% |
| Power Factor @ Full Load | >0.90 | >0.90 |
| Efficiency @ Full Load | >85% | >85% |
| Inrush Current (Apk) | TBD | TBD |
| *Output* | | |
| Output Current (mA) | 350 - 1250mA | |
| Output Voltage (VDC) | 10 - 55V | |
| Output Ripple Current | TBD | |
| Maximum Output Power (W) | 50W | |
| LED Power Up Time | <1sec | |
| Load Regulation | TBD | |
| Line Regulation | TBD | |
| Over Voltage Protection | Yes, Auto Recovery | |
| Over Load Protection | Yes, Auto Recovery | |
| Output Short-Circuit Protection | Yes | |

# PRELIMINARY

## GENERAL INFORMATION

| | |
|---|---|
| Order Numbers | XLC30-1250Z-UNV-I |
| Type | Constant Current |
| Output Power | 30W (Maximum) |
| Programming Method | I-LOC Keys |

## DIMMING

| | |
|---|---|
| Dimming Control | 0-10V Dimming |
| Dimming Range | Dims to 1% (XLC30-1250Z-UNV-I) |
| Dim Output | TBD |
| Dimming Input Isolation | TBD |
| Source/Sink Current | TBD |

## ENVIRONMENTAL SPECIFICATIONS

| | |
|---|---|
| Minimum Operating Temperature | TBD |
| Maximum Case Temperature (Tc) | 85°C* |
| Maximum Storage Temperature | TBD |
| Maximum Relative Humidity (%) | TBD |
| Transient Protection | NEMA SSL1-2010 Non-Roadway 2.5kV |
| UL Environment Rating | Dry & Damp |
| UL File Number | TBD |
| EMI Compliance | FCC Part 15 Class A |
| Sound Rating | Class A |

*80°C Maximum Case Temperature for Warranty Purposes

## WIRING

| | |
|---|---|
| Input: | Terminals<br>Black (L), White (N), Green (G) |
| Output: | Terminals<br>Red (+), Black (-) |
| Dimming: | Terminals<br>Purple (+), Grey (-) |
| *Use solid copper wire only (16-24 AWG)<br>Strip length 3/8” | |

## DIMENSIONS

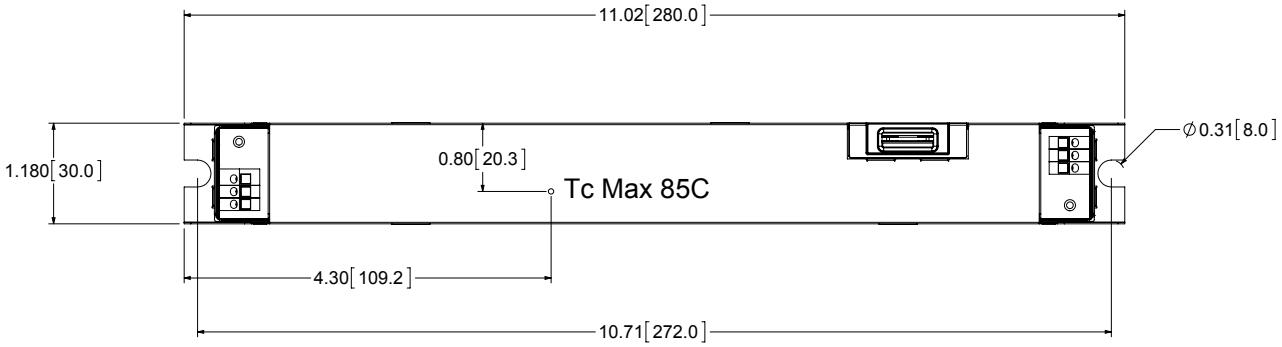


in [mm]

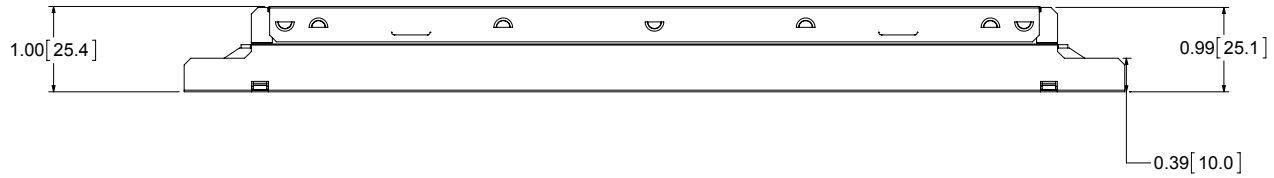


Always confirm fit with a physical sample.
Specifications subject to change.

| PACKAGING INFORMATION | |
|---|---|
| Weight: | 0.65 lbs |
| Quantity: | 50pc/carton |

## PROGRAMMABILITY

Hatch I-LOC Technology enables quick and easy setting of driver output current with the simple click of a key. Select the appropriate I-LOC key for the desired output current and click it into the driver. The keys are interchangeable across the Hatch I-LOC LED Driver Linear product family and have a 28% to maximum output range.

| Drive Factor | Part Number | 1250mA Max |
|---|---|---|
| 1.00 | XA100 | 1250mA |
| 0.98 | XB098 | 1225mA |
| 0.95 | XC095 | 1188mA |
| 0.93 | XD093 | 1163mA |
| 0.90 | XE090 | 1125mA |
| 0.88 | XF088 | 1100mA |
| 0.85 | XG085 | 1063mA |
| 0.83 | XH083 | 1038mA |
| 0.80 | XI080 | 1000mA |
| 0.78 | XJ078 | 975mA |
| 0.75 | XJ075 | 938mA |
| 0.73 | XL073 | 913mA |
| 0.70 | XM070 | 875mA |
| 0.68 | XN068 | 850mA |
| 0.65 | XO065 | 813mA |

| Drive Factor | Part Number | 1250mA Max |
|---|---|---|
| 0.63 | XP063 | 788mA |
| 0.60 | XQ060 | 750mA |
| 0.58 | XR058 | 725mA |
| 0.55 | XS055 | 688mA |
| 0.53 | XT053 | 663mA |
| 0.50 | XU050 | 625mA |
| 0.48 | XLA048 | 600mA |
| 0.45 | XLB045 | 563mA |
| 0.43 | XLC43 | 538mA |
| 0.40 | XLD040 | 500mA |
| 0.38 | XLE038 | 475mA |
| 0.35 | XLF035 | 438mA |
| 0.33 | XLG033 | 413mA |
| 0.30 | XLH030 | 375mA |
| 0.28 | XLI028 | 350mA |

Adjusted Output Current
Tolerance +/- 3%

## OPERATING RANGE

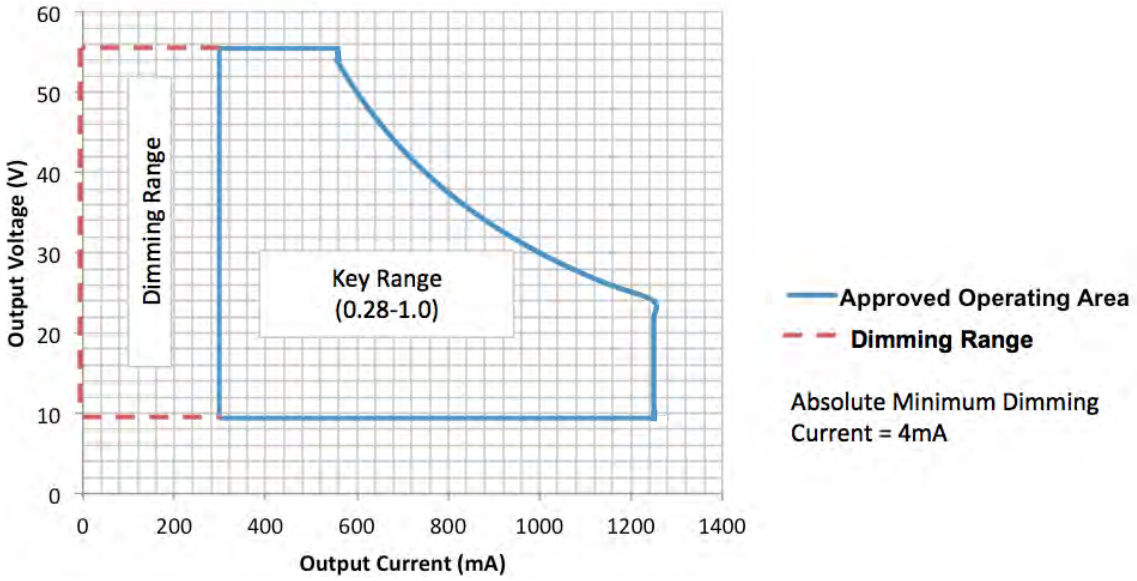


## DIMMING

I-LOC Linear drivers dim to 1% of the adjusted output current.

# ADJUSTABLE CONSTANT CURRENT LED DRIVER
# XLC50 PROGRAMMABLE SPECIFICATIONS SHEET

## ELECTRICAL SPECIFICATIONS

| *Input* | | |
|---|---|---|
| Input Voltage (VAC) | 120-277V (+/-10%) | |
| Frequency Range (Hz) | 50-60Hz | |
| | **120V** | **277V** |
| Input Current (A) | TBD | TBD |
| THD @ Full Load | <20% | <20% |
| Power Factor @ Full Load | >0.90 | >0.90 |
| Efficiency @ Full Load | >85% | >85% |
| Inrush Current (Apk) | TBD | TBD |
| *Output* | | |
| Output Current (mA) | 392 - 1400mA | |
| Output Voltage (VDC) | 10 - 55V | |
| Output Ripple Current | TBD | |
| Maximum Output Power (W) | 50W | |
| LED Power Up Time | <1sec | |
| Load Regulation | TBD | |
| Line Regulation | TBD | |
| Over Voltage Protection | Yes, Auto Recovery | |
| Over Load Protection | Yes, Auto Recovery | |
| Output Short-Circuit Protection | Yes | |

# PRELIMINARY

## GENERAL INFORMATION

| | |
|---|---|
| Order Numbers | XLC50-1400Z-UNV-I |
| Type | Constant Current |
| Output Power | 50W (Maximum) |
| Programming Method | I-LOC Keys |

## DIMMING

| | |
|---|---|
| Dimming Control | 0-10V Dimming |
| Dimming Range | Dims to 1% (XLC50-1400Z-UNV-I) |
| Dim Output | TBD |
| Dimming Input Isolation | TBD |
| Source/Sink Current | TBD |

## ENVIRONMENTAL SPECIFICATIONS

| | |
|---|---|
| Minimum Operating Temperature | TBD |
| Maximum Case Temperature (Tc) | 85°C* |
| Maximum Storage Temperature | TBD |
| Maximum Relative Humidity (%) | TBD |
| Transient Protection | NEMA SSL1-2010 Non-Roadway 2.5kV |
| UL Environment Rating | Dry & Damp |
| UL File Number | TBD |
| EMI Compliance | FCC Part 15 Class A |
| Sound Rating | Class A |

*80°C Maximum Case Temperature for Warranty Purposes

## WIRING

| | |
|---|---|
| Input: | Terminals<br>Black (L), White (N), Green (G) |
| Output: | Terminals<br>Red (+), Black (-) |
| Dimming: | Terminals<br>Purple (+), Grey (-) |
| *Use solid copper wire only (16-24 AWG)<br>Strip length 3/8” | |

## DIMENSIONS

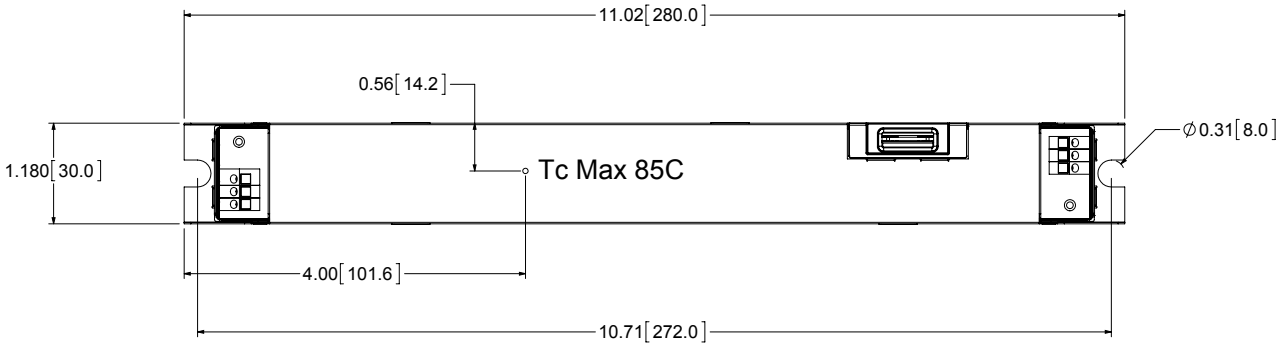


in [mm]

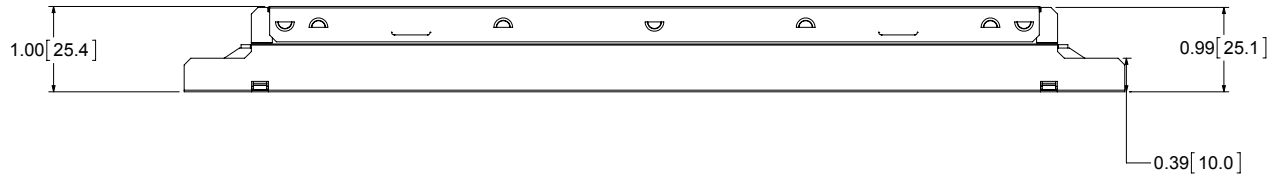


Always confirm fit with a physical sample.
Specifications subject to change.

| PACKAGING INFORMATION | |
|---|---|
| Weight: | 0.65 lbs |
| Quantity: | 50pc/carton |

## PROGRAMMABILITY

Hatch I-LOC Technology enables quick and easy setting of driver output current with the simple click of a key. Select the appropriate I-LOC key for the desired output current and click it into the driver. The keys are interchangeable across the Hatch I-LOC LED Driver Linear product family and have a 28% to maximum output range.

| Drive Factor | Part Number | 1400mA Max |
|---|---|---|
| 1.00 | XA100 | 1400mA |
| 0.98 | XB098 | 1372mA |
| 0.95 | XC095 | 1330mA |
| 0.93 | XD093 | 1302mA |
| 0.90 | XE090 | 1260mA |
| 0.88 | XF088 | 1232mA |
| 0.85 | XG085 | 1190mA |
| 0.83 | XH083 | 1162mA |
| 0.80 | XI080 | 1120mA |
| 0.78 | XJ078 | 1092mA |
| 0.75 | XJ075 | 1050mA |
| 0.73 | XL073 | 1022mA |
| 0.70 | XM070 | 980mA |
| 0.68 | XN068 | 952mA |
| 0.65 | XO065 | 910mA |

| Drive Factor | Part Number | 1400mA Max |
|---|---|---|
| 0.63 | XP063 | 882mA |
| 0.60 | XQ060 | 840mA |
| 0.58 | XR058 | 812mA |
| 0.55 | XS055 | 770mA |
| 0.53 | XT053 | 742mA |
| 0.50 | XU050 | 700mA |
| 0.48 | XLA048 | 672mA |
| 0.45 | XLB045 | 630mA |
| 0.43 | XLC043 | 602mA |
| 0.40 | XLD040 | 560mA |
| 0.38 | XLE038 | 532mA |
| 0.35 | XLF035 | 490mA |
| 0.33 | XLG033 | 462mA |
| 0.30 | XLH030 | 420mA |
| 0.28 | XLI028 | 392mA |

Adjusted Output Current
Tolerance +/- 3%

## OPERATING RANGE

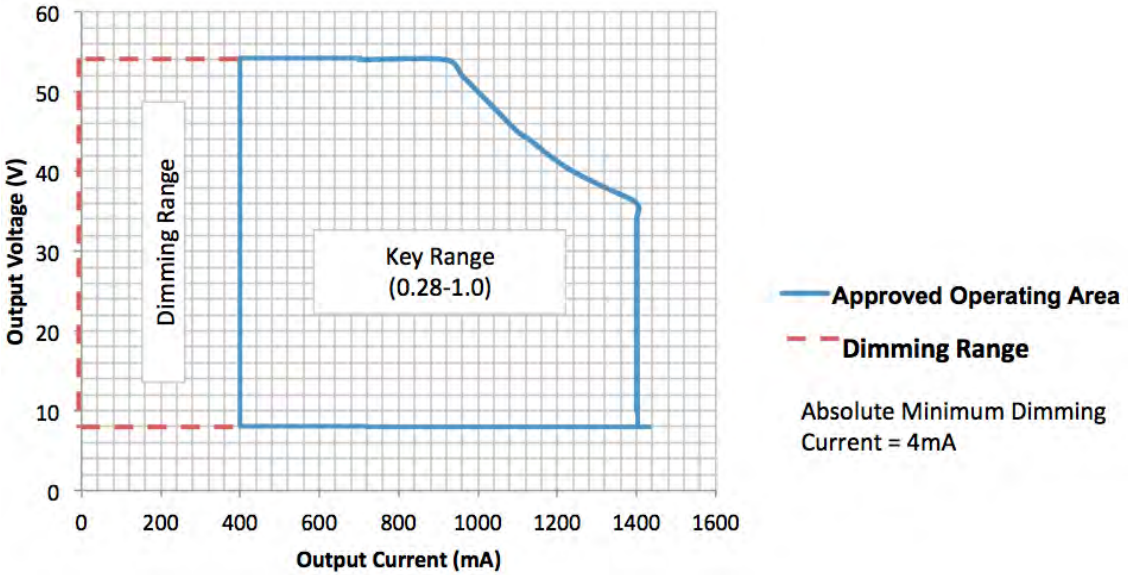


## DIMMING

I-LOC Linear drivers dim to 1% of the adjusted output current.

# 16W·32W 34W

HATCH LED DRIVERS

I-LOC® TECHNOLOGY
PATENT PENDING

| | |
|---|---|
| LED Driver Type | Adjustable Constant Current |
| Input Voltage | 120-277VAC Nominal, 50/60Hz |
| XRC Dimming | 0-10V Dimming OR<br>Leading & Trailing Edge Dimming @ 120VAC |

Hatch I-LOC™ Technology enables quick and easy setting of driver output current with the simple click of a key. Select the appropriate I-LOC key for the desired output current and click it into the driver. The keys are interchangeable across the HATCH I-LOC LED Driver product set and have a 50% to maximum output range.

| Driver Factor | Designator | 350mA MAX | 700mA MAX | 1050mA MAX |
|---|---|---|---|---|
| 1.00 | A | 350mA | 700mA | 1050mA |
| 0.98 | B | 343mA | 686mA | 1029mA |
| 0.95 | C | 333mA | 665mA | 998mA |
| 0.93 | D | 326mA | 651mA | 977mA |
| 0.90 | E | 315mA | 630mA | 945mA |
| 0.88 | F | 308mA | 616mA | 924mA |
| 0.85 | G | 298mA | 595mA | 893mA |
| 0.83 | H | 291mA | 581mA | 872mA |
| 0.80 | I | 280mA | 560mA | 840mA |
| 0.78 | J | 273mA | 546mA | 819mA |
| 0.75 | K | 263mA | 525mA | 788mA |
| 0.73 | L | 256mA | 511mA | 767mA |
| 0.70 | M | 245mA | 490mA | 735mA |
| 0.68 | N | 238mA | 476mA | 714mA |
| 0.65 | O | 228mA | 455mA | 683mA |
| 0.63 | P | 221mA | 441mA | 662mA |
| 0.60 | Q | 210mA | 420mA | 630mA |
| 0.58 | R | 203mA | 406mA | 609mA |
| 0.55 | S | 193mA | 385mA | 578mA |
| 0.53 | T | 186mA | 371mA | 557mA |
| 0.50 | U | 175mA | 350mA | 525mA |

Adjusted Output Current Tolerance +/- 3%

## XRC SERIES LED DRIVER

| Part Number Guide | | |
|---|---|---|
| Max. Output (mA) | Max. Power (Watts) | XRC |
| 0-10V Dimming | | |
| 350 | 16 | XRC16-0350Z-UNV-I |
| 700 | 32 | XRC32-0700Z-UNV-I |
| 1050 | 34 | XRC34-1050Z-UNV-I |
| Leading & Trailing Edge Dimming | | |
| 350 | 16 | XRC16-0350P-UNV-I |
| 700 | 32 | XRC32-0700P-UNV-I |
| 1050 | 34 | XRC34-1050P-UNV-I |

## FEATURES:

- Short circuit overload & open load protection
- Over voltage & over current protection - auto recovery
- Lifetime 50,000 hrs @ 80°C case temp.
- Class 2 output
- Complies with IEEE C62.41-1991, Class A operation.
- Starts as quickly as 125ms
- Designed to meet FCC Part 15 Class B
- Minimum start temp. -30°C
- NEMA 410 Compliant

Leading & trailing edge
- Dimmable at 120V only
- Dims to zero

0-10V Dimmable
- Dims to 1%

## CERTIFICATIONS:

FC

c UL us

Type TL

## APPLICATIONS:

- Track lighting
- Recessed lighting
- General illumination
- Commercial lighting
- Architectural lighting

## WARRANTY:

5 year limited

| INPUT | | | | | | |
|---|---|---|---|---|---|---|
| Power Factor | | | | > 0.90 | | |
| Total Harmonic Distortion | | | | < 20% | | |
| **OUTPUT** | | | | | | |
| Dimming Type | Phase | | | 0-10V Dimming | | |
| Max. Power | 16W | 32W | 34W | 16W | 32W | 34W |
| Current | 350mA | 700mA | 1050mA | 350mA | 700mA | 1050mA |
| Voltage Range | 20-46V | 20-46V | 14-32V | 24-46V | 24-46 | 17-32V |
| Efficiency | >85% | | | >85% | | |
| Max. Case Temp. | 85°C | | | 85°C | | |

# 16W·32W 34W

hatch LED DRIVERS™

I-LOC® TECHNOLOGY
PATENT PENDING

| | |
|---|---|
| LED Driver Type | Adjustable Constant Current |
| Input Voltage | 120-277VAC Nominal, 50/60Hz |
| XRC Dimming | 0-10V Dimming OR<br>Leading & Trailing Edge Dimming @ 120VAC |

Hatch **XRC** series leading & trailing edge dimmable LED driver products are suitable for use with most incandescent (leading edge) and electronic low voltage (trailing edge) dimming products. Dims to zero.

**XRC** I-LOC 0-10V dimming drivers dim to 1%. When the driver factor is adjusted with a new key the driver dims to 1% of the new adjusted output current.

## MECHANICAL SPECIFICATIONS: I-LOC CASE STYLE XRC

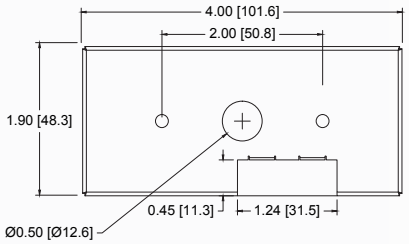


in [mm]

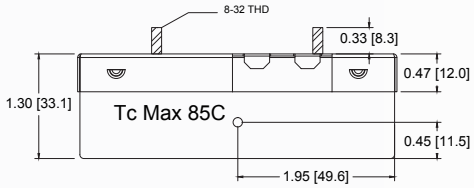


Always confirm fit with a physical sample
Specifications subject to change

## WIRING INFORMATION

| | |
|---|---|
| Input: | 6", Black (L), White (N) #18AWG |
| Output: | 6", Red (+), Black/White (-) #24AWG |
| Dimming: | 6", Purple (+), Grey (-) # 24AWG |

## PACKAGING INFORMATION

| | |
|---|---|
| Weight: | 9.1oz |
| Quantity: | 50pc/carton |

# 16W·32W 34W

hatch LED DRIVERS™

I-LOC® TECHNOLOGY
PATENT PENDING

| | |
|---|---|
| LED Driver Type | Adjustable Constant Current |
| Input Voltage | 120-277VAC Nominal, 50/60Hz |
| XRC Dimming | Leading & Trailing Edge Dimming @ 120VAC |

Hatch **XRC** series leading & trailing edge dimmable LED driver products are suitable for use with most incandescent (leading edge) and electronic low voltage (trailing edge) dimming products. Dims to zero.

## INRUSH CHARACTERISTICS

### PHASE DIMMING

| Max Output | Vin | Ipk | T (50% Ipk) |
|---|---|---|---|
| 350mA | 120V | 0.58A | 59µs |
| | 277V | 1.18A | 52µs |
| 700mA | 120V | 0.88A | 50µs |
| | 277V | 1.36A | 94µs |
| 1050mA | 120V | 0.74A | 63µs |
| | 277V | 1.28A | 95µs |

### 0-10V DIMMING

| Max Output | Vin | Ipk | T (50% Ipk) |
|---|---|---|---|
| 350mA | 120V | 1.70A | 32µs |
| | 277V | 2.76A | 33µs |
| 700mA | 120V | 3.75A | 37µs |
| | 277V | 4.30A | 58µs |
| 1050mA | 120V | 3.74A | 36µs |
| | 277V | 4.03A | 57µs |

# 16W·32W 34W

hatch™ LED DRIVERS

## I-LOC® TECHNOLOGY
PATENT PENDING

| | |
|---|---|
| LED Driver Type | Adjustable Constant Current |
| Input Voltage | 120-277VAC Nominal, 50/60Hz |
| XTC Dimming | Leading & Trailing Edge Dimming @ 120VAC |

Hatch I-LOC™ Technology enables quick and easy setting of driver output current with the simple click of a key. Select the appropriate I-LOC™ key for the desired output current and click it into the driver. The keys are interchangeable across the HATCH I-LOC™ LED Driver product set and have a 50% to maximum output range.

| Driver Factor | Designator | 350mA MAX | 700mA MAX | 1050mA MAX |
|---|---|---|---|---|
| 1.00 | A | 350mA | 700mA | 1050mA |
| 0.98 | B | 343mA | 686mA | 1029mA |
| 0.95 | C | 333mA | 665mA | 998mA |
| 0.93 | D | 326mA | 651mA | 977mA |
| 0.90 | E | 315mA | 630mA | 945mA |
| 0.88 | F | 308mA | 616mA | 924mA |
| 0.85 | G | 298mA | 595mA | 893mA |
| 0.83 | H | 291mA | 581mA | 872mA |
| 0.80 | I | 280mA | 560mA | 840mA |
| 0.78 | J | 273mA | 546mA | 819mA |
| 0.75 | K | 263mA | 525mA | 788mA |
| 0.73 | L | 256mA | 511mA | 767mA |
| 0.70 | M | 245mA | 490mA | 735mA |
| 0.68 | N | 238mA | 476mA | 714mA |
| 0.65 | O | 228mA | 455mA | 683mA |
| 0.63 | P | 221mA | 441mA | 662mA |
| 0.60 | Q | 210mA | 420mA | 630mA |
| 0.58 | R | 203mA | 406mA | 609mA |
| 0.55 | S | 193mA | 385mA | 578mA |
| 0.53 | T | 186mA | 371mA | 557mA |
| 0.50 | U | 175mA | 350mA | 525mA |

## XTC SERIES LED DRIVER

| Part Number Guide | | |
|---|---|---|
| Max. Output (mA) | Max. Power (Watts) | XTC |
| Leading & Trailing Edge Dimming | | |
| 350 | 16 | XTC16-0350P-UNV-I |
| 700 | 32 | XTC32-0700P-UNV-I |
| 1050 | 34 | XTC34-1050P-UNV-I |

Adjusted Output Current Tolerance +/- 3%

### FEATURES:

- Short circuit overload & open load protection
- Over voltage & over current protection - auto recovery
- Lifetime 50,000 hrs @ 80°C case temp.
- Class 2 output
- Complies with IEEE C62.41-1991, Class A operation.
- Starts as quickly as 125ms
- Designed to meet FCC Part 15 Class B
- Minimum start temp. -30°C
- NEMA 410 Compliant

Leading & trailing edge
- Dimmable at 120V only
- Dims to zero

### CERTIFICATIONS:

FC

c UL us

Type TL

### APPLICATIONS:

- Track lighting
- Recessed lighting
- General illumination
- Commercial lighting
- Architectural lighting

### WARRANTY:

5 year limited

| INPUT | |
|---|---|
| Power Factor | > 0.90 |
| Total Harmonic Distortion | < 20% |

| OUTPUT | | | |
|---|---|---|---|
| Dimming Type | Phase | | |
| Max. Power | 16W | 32W | 34W |
| Current | 350mA | 700mA | 1050mA |
| Voltage Range | 20-46V | 20-46V | 14-32V |
| Efficiency | >85% | | |
| Max. Case Temp. | 85°C | | |

# 16W·32W 34W

hatch LED DRIVERS™

I-LOC® TECHNOLOGY
PATENT PENDING

| | |
|---|---|
| LED Driver Type | Adjustable Constant Current |
| Input Voltage | 120-277VAC Nominal, 50/60Hz |
| XTC Dimming | Leading & Trailing Edge Dimming @ 120VAC |

Hatch **XTC** series leading & trailing edge dimmable LED driver products are suitable for use with most incandescent (leading edge) and electronic low voltage (trailing edge) dimming products. Dims to zero.

## MECHANICAL SPECIFICATIONS: I-LOC CASE STYLE XTC

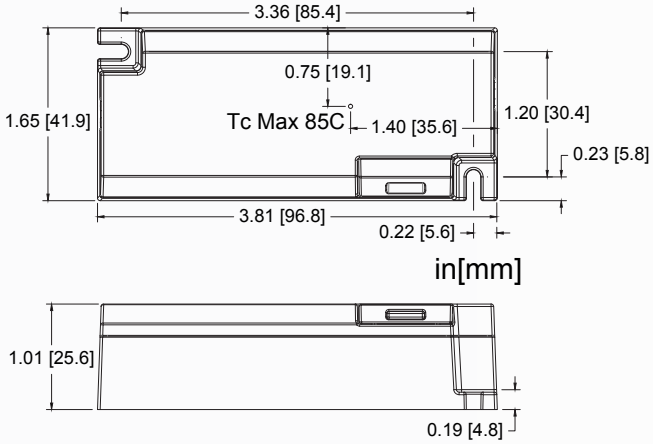





Always confirm fit with a physical sample
Specifications subject to change

## WIRING INFORMATION

| | |
|---|---|
| Input: | 6", Black (L), White (N) #18AWG |
| Output: | 6", Red (+), Black (-) #24AWG |

## PACKAGING INFORMATION

| | |
|---|---|
| Weight: | 9.1oz |
| Quantity: | 50pc/carton |

# 16W·32W 34W

hatch LED DRIVERS™

I-LOC® TECHNOLOGY
PATENT PENDING

| | |
|---|---|
| LED Driver Type | Adjustable Constant Current |
| Input Voltage | 120-277VAC Nominal, 50/60Hz |
| XTC Dimming | Leading & Trailing Edge Dimming @ 120VAC |

Hatch **XTC** series leading & trailing edge dimmable LED driver products are suitable for use with most incandescent (leading edge) and electronic low voltage (trailing edge) dimming products. Dims to zero.

## INRUSH CHARACTERISTICS

| PHASE DIMMING | | | |
|---|---|---|---|
| Max Output | Vin | Ipk | T (50% Ipk) |
| 350mA | 120V | 0.58A | 59µs |
| | 277V | 1.18A | 52µs |
| 700mA | 120V | 0.88A | 50µs |
| | 277V | 1.36A | 94µs |
| 1050mA | 120V | 0.74A | 63µs |
| | 277V | 1.28A | 95µs |

hatch LED DRIVERS™

LED SURGE PROTECTOR

# LSP2-UNV

## LED Surge Protector

The Hatch LSP2-UNV surge protector provides single phase protection for line/neutral in accordance with IEEE C62.41 Category C Low Exposure. The unit was designed to meet new design requirements for luminaires using LED light engines. The LSP2-UNV offers protection for LED luminaires in a small and convenient flat form factor.

## SPECIFICATIONS:

| | |
|---|---|
| Input Voltage: | 120-277V (+/- 5%) |
| Frequencey: | 50Hz-60Hz |
| Maximum Continuous Voltage: | 320V |
| Maximum Discharge Current: | 10kA (8/20µs standard wave) |
| Nominal Discharge Current: | 5kA |
| Wiring: | 6 in [153mm] 14 Gauge stripped wires, 105°C, 600V |
| Wire Connections: | Black and white: 0.5 in [13mm] stripped |
| Mounting Hole: | 0.22 in [5.5 mm] |
| Max Case Temperature: | 90°C |

## WIRING DIAGRAM:

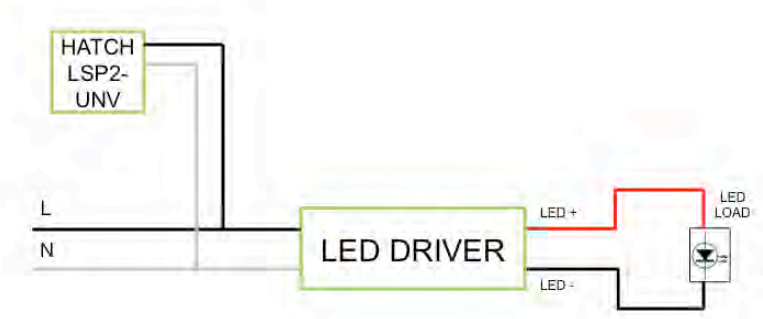


## MECHANICAL DIMENSIONS:

in [mm]

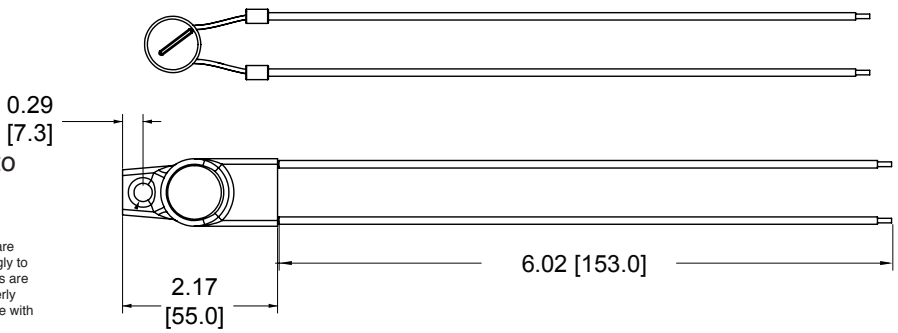


Specifications subject to change without notice.

The LSP2 series of surge protection devices are UL type 5 devices and are designed accordingly to meet UL1449 standard. LSP2 surge protectors are intended to be used in combination with properly rated overcurrent protection and in accordance with the intended application.

RoHS COMPLIANT

c UL us

hatch™ LED DRIVERS

LED SURGE PROTECTOR

# LSP4-480

## LED Surge Protector

The Hatch LSP4-480 surge protector provides single phase protection for line/neutral, line/ground and neutral/ground in accordance with IEEE C62.41 Category C Low Exposure. The unit was designed to meet new design requirements for luminaires using LED light engines. The LSP4-480 offers protection for LED luminaires in a small and convenient flat form factor. The surge protector is Type 5 SPD.

## SPECIFICATIONS:

| | |
|---|---|
| Input Voltage: | 347-480V (+/- 5%) |
| Frequencey: | 50Hz-60Hz |
| Maximum Continuous Voltage: | 550V |
| Maximum Discharge Current: | 10kA (8/20µs standard wave) |
| Nominal Discharge Current: | 5kA |
| Wiring: | 6 in [153mm] 14 Gauge stripped wires, 105°C, 600V |
| Wire Connections: | Black and white: 0.5 in [13mm] stripped<br>Green: 0.5 in [13mm] stripped with #8 ring terminal |
| Mounting Hole: | 0.22 in [5.5 mm] |
| Max Case Temperature: | 90°C |

## WIRING DIAGRAM:

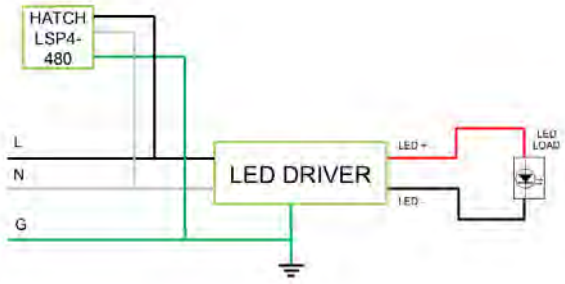


## MECHANICAL DIMENSIONS:

in [mm]

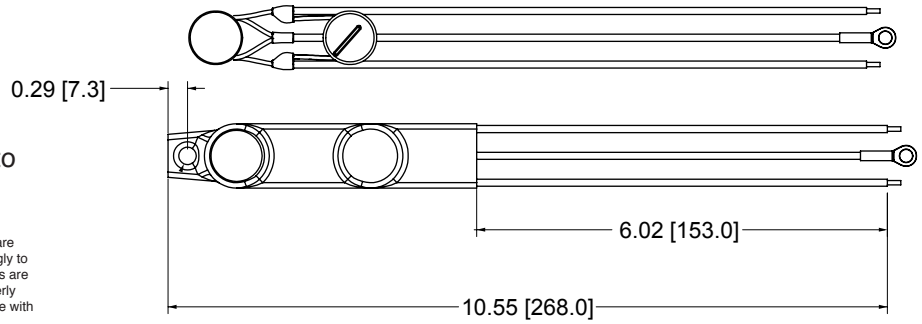


Specifications subject to change without notice.

The LSP4 series of surge protection devices are UL type 5 devices and are designed accordingly to meet UL1449 standard. LSP4 surge protectors are intended to be used in combination with properly rated overcurrent protection and in accordance with the intended application.

RoHS COMPLIANT

c UL us

hatch LED DRIVERS™

LED SURGE PROTECTOR

# LSP4-UNV

## LED Surge Protector

The Hatch LSP4-UNV surge protector provides single phase protection for line/neutral, line/ground and neutral/ground in accordance with IEEE C62.41 Category C Low Exposure. The unit was designed to meet new design requirements for luminaires using LED light engines. The LSP4-UNV offers protection for LED luminaires in a small and convenient flat form factor. The surge protector is Type 5 SPD.

## SPECIFICATIONS:

| | |
|---|---|
| Input Voltage: | 120-277V (+/- 5%) |
| Frequencey: | 50Hz-60Hz |
| Maximum Continuous Voltage: | 320V |
| Maximum Discharge Current: | 10kA (8/20µs standard wave) |
| Nominal Discharge Current: | 5kA |
| Wiring: | 6 in [153mm] 14 Gauge stripped wires, 105°C, 600V |
| Wire Connections: | Black and white: 0.5 in [13mm] stripped<br>Green: 0.5 in [13mm] stripped with #8 ring terminal |
| Mounting Hole: | 0.22 in [5.5 mm] |
| Max Case Temperature: | 90°C |

## WIRING DIAGRAM:

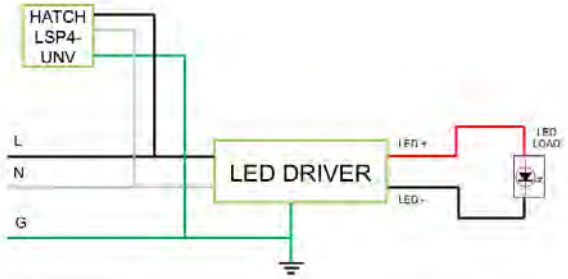


## MECHANICAL DIMENSIONS:

in [mm]

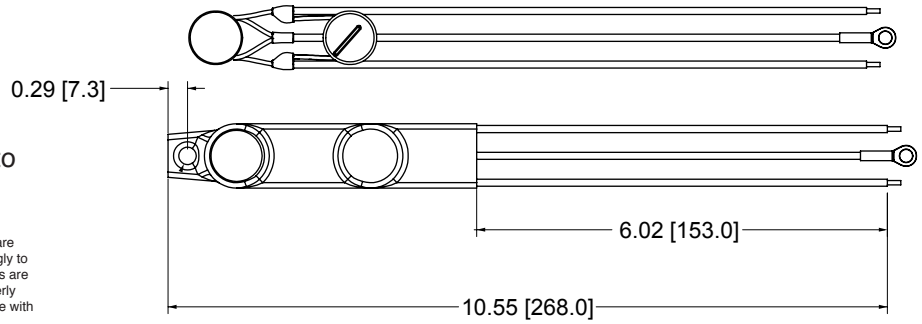


Specifications subject to change without notice.

The LSP4 series of surge protection devices are UL type 5 devices and are designed accordingly to meet UL1449 standard. LSP4 surge protectors are intended to be used in combination with properly rated overcurrent protection and in accordance with the intended application.

RoHS COMPLIANT

c UL us

hatch LED DRIVERS

LED SURGE PROTECTOR

# LSP10-SM

## LED Surge Protector

The LSP10-SM is designed to be used in conjunction with LED Drivers and fixtures to provide an additional level of protection against powerline disturbances in industrial, commercial and residential applications where surge protection to IEEE C62.41.2 is required. The LSP10-SM can also be used with electronic fluorescent and HID ballasts. This product provides single phase protection for line/neutral, line/ground and neutral/ground and is a Type 4CA SPD for field or factory installation.

### Hatch Surge Protector Features

SNAPLOCK™ MOUNTING

- One step secure mounting to a 3/4" standard electrical Knockout
- Eliminates need for lock nuts - quick and easy installation
- One hand installation
- No tools required
- High temperature, flame retardant plastic enclosure, 85°C maximum surface temperature rating

## SPECIFICATIONS:

| | |
|---|---|
| Input Voltage: | 120-277V (+/- 5%) |
| Frequencey: | 60Hz |
| Maximum Continuous Voltage: | 320V |
| Open Circuit Voltage: | 10kV |
| Maximum Discharge Current: | 10kA (8/20µs standard wave) |
| Nominal Discharge Current: | 5kA |
| Wiring: | 105°C, stripped 3/8" tinned |
| Wire Connections: | 6", 16AWG stranded |
| Thermal Protection: | Thermally protected transient over-voltage circuit |

## WIRING DIAGRAM:

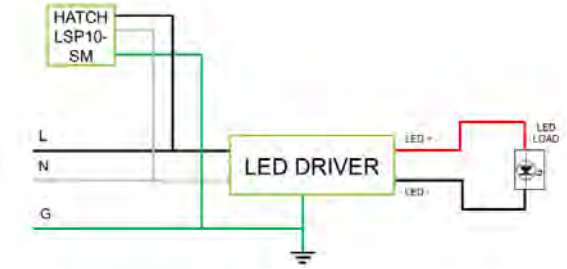


## MECHANICAL DIMENSIONS:

SNAPLOCK™ Model
Snaps into a 3/4" K.O. or can be mounted by feet

in [mm]

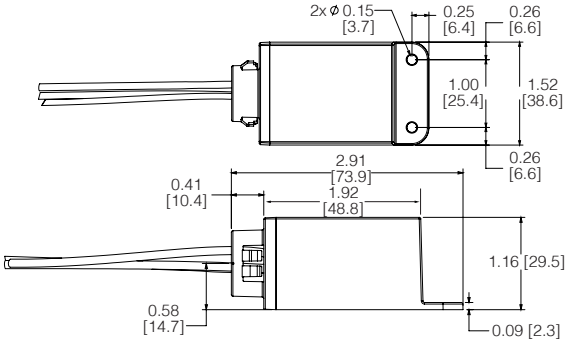


RoHS COMPLIANT

c UL us

# Voltage Indicating Device

**120 Volt VID**

## VOLTAGE INDICATING DEVICE

| | |
|---|---|
| **Input Voltage** | 120Vac, 60Hz |
| **Enclosure Material** | Polycarbonate |
| **Weight** | 4 oz. |
| **Input** | 8", 18AWG stranded, 105 degree C stripped 3/8" tinned |

## ENVIRONMENTAL SPECIFICATIONS:

| | |
|---|---|
| **Maximum Case Temperature** | 70°C |
| **Minimum Starting Temperature** | -30°C |
| **Sound Rating** | A |
| **Transient Protection** | Yes |

## OPERATION :

The VID can be used in any application where the need to monitor a particular voltage is required. An LED will turn on when the nominal voltage diverges from its expected range of operation. Other than the illuminated LED, the voltage indicating device (VID) provides no other means to indicate, warn or correct any voltage variation or other adverse condition beyond the stated preset limits of the device.

The VID is intended as an indication of voltage between nominal 120V mains and Line and Neutral connections only.

The LED indicator will only illuminate when input voltage is between the preset limits outlined per the model number.

**Model VID-120BF is designed with the LED in the "OFF" state during normal operation. This is a NON failsafe design. Therefore, a regular testing schedule is required to ensure proper operation of the device. ***

## APPROVALS :

c UL us

## VOLTAGE VARIATION LEVELS

| Model Number | Nominal Input | LED Illumination Level |
|---|---|---|
| VID-120BF | 120 VAC | <10 VAC to 100VAC +/- 2 VAC |

**When Lamp (LED) is lit = A voltage variation is present per the range/model.**

**NOTE: This product is for supplemental use only.**

The VID is not designed as a safety critical component of any system and should not be relied upon to indicate any safety critical condition in any connected system.
This device is **NOT** designed to detect **"Stray Voltage"**.

**Special Order Only**

## DIMENSIONS:

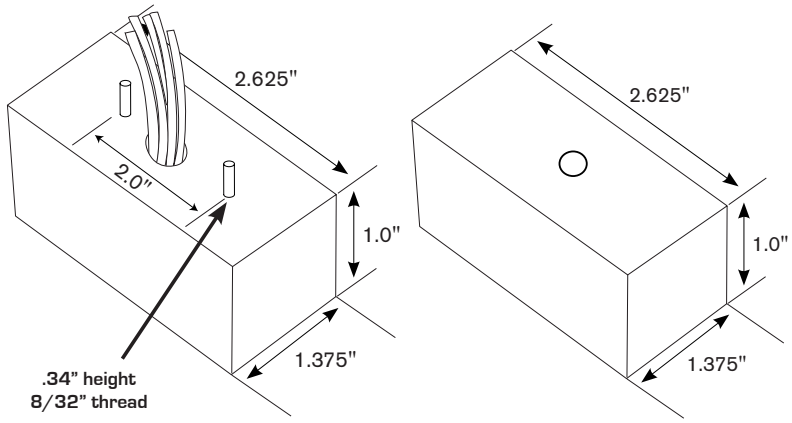


## WIRING DIAGRAM:

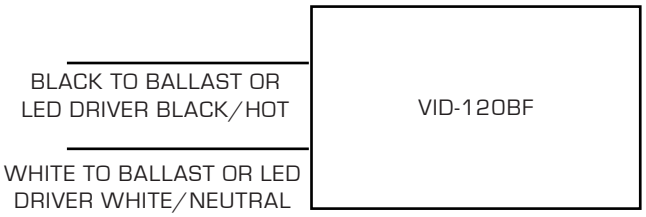


* Testing schedule for proper operation to be determined by the user based on the importance of the end application.

Specification subject to change without notice.



REV: 060116

# hatch

**Series**
## LS Hardwire Transformers
**75 Watt Models**

## ELECTRONIC STEP DOWN TRANSFORMER

| | |
|---|---|
| **Input Voltage** | 277VAC - 60Hz |
| **Output** | 120VAC |
| **Enclosure Material** | Aluminum |
| **Power Factor** | > 0.95 |
| **Input** | 13", 18#AWG stranded, 105°C stripped 3/8" tinned |
| **Output** | 13", 18#AWG stranded, 105°C stripped 3/8" tinned |

## ENVIRONMENTAL SPECIFICATIONS:

| | |
|---|---|
| **Temperature Class** | Class B (130°C) |
| **Thermal Protection** | None |

c UL us

## HARDWIRE ELECTRONIC

| Watts | Hatch Part Number | Input Volts | Output Volts | Safety Listing |
|---|---|---|---|---|
| 75 | LS120-75EN-277 | 277 | 120 | UL/C-UL Recognized |

## DIMENSIONS:

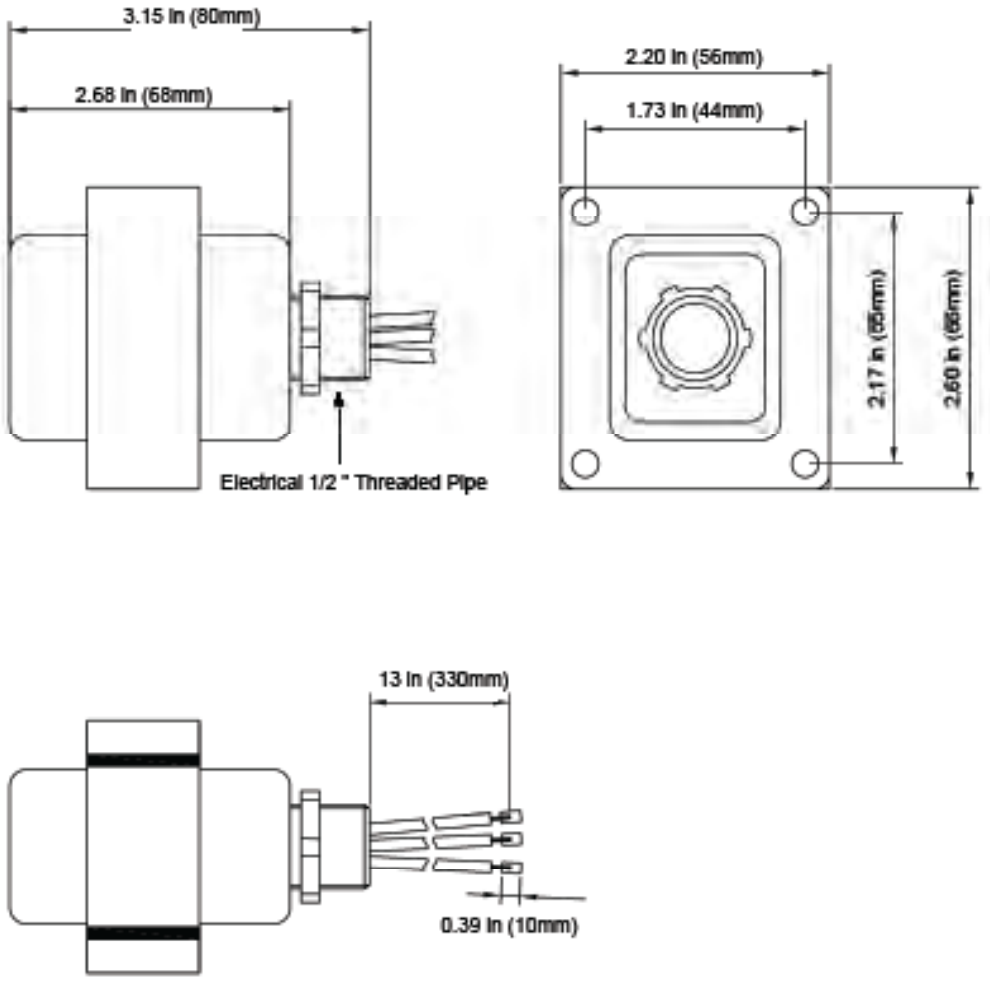


## WIRING DIAGRAM:

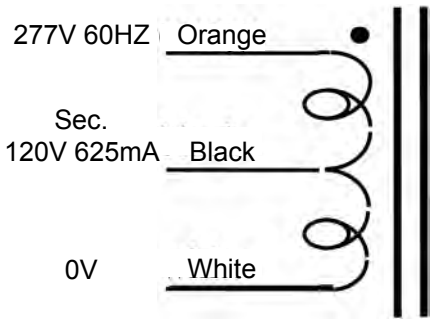


To Connect:
White: Common, to be used for both voltages.

IE: 277V connect White with Orange (Input)
120V connect White with Black (Output)

# hatch

**Series**
## LS Hardwire Transformers
**75 Watt Models**

## ELECTRONIC STEP DOWN TRANSFORMER

| | |
|---|---|
| **Input Voltage** | 347VAC - 60Hz |
| **Output** | 120VAC |
| **Enclosure Material** | Aluminum |
| **Power Factor** | > 0.95 |
| **Input** | 13", 18#AWG stranded, 105°C stripped 3/8" tinned |
| **Output** | 13", 18#AWG stranded, 105°C stripped 3/8" tinned |

## ENVIRONMENTAL SPECIFICATIONS:

| | |
|---|---|
| **Temperature Class** | Class B (130°C) |
| **Thermal Protection** | None |

c UL us

## HARDWIRE ELECTRONIC

| Watts | Hatch Part Number | Input Volts | Output Volts | Safety Listing |
|---|---|---|---|---|
| 75 | LS120-75EN-347 | 347 | 120 | UL/C-UL Recognized |

## DIMENSIONS:

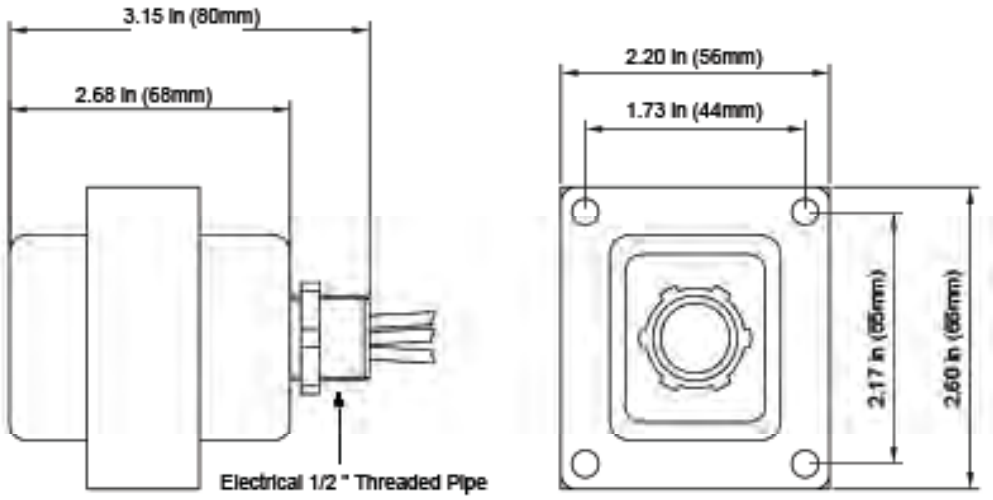


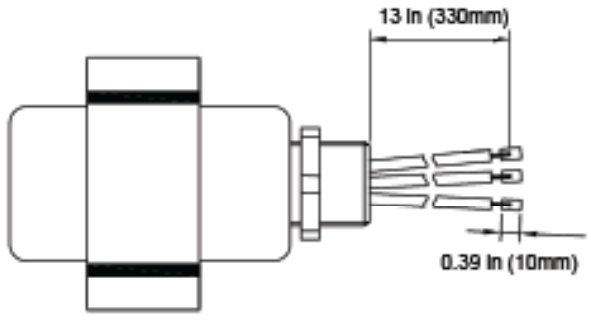


## WIRING DIAGRAM:

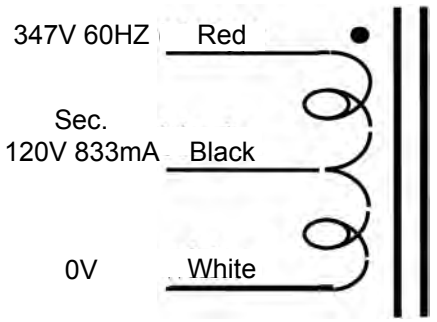


To Connect:
White: Common, to be used for both voltages.

IE: 347V connect White with Red (Input)
120V connect White with Black (Output)

SERIES
# LS Hardwire Transformers
100 Watt Models

## ELECTRONIC STEP DOWN TRANSFORMER

| | |
|---|---|
| **Input Voltage** | 347VAC - 60Hz |
| **Output** | 120VAC |
| **Enclosure Material** | Aluminum |
| **Power Factor** | > 0.95 |
| **Input** | 13", 18#AWG stranded, 105°C stripped 3/8" tinned |
| **Output** | 13", 18#AWG stranded, 105°C stripped 3/8" tinned |

## ENVIRONMENTAL SPECIFICATIONS:

| | |
|---|---|
| **Temperature Class** | Class B (130°C) |
| **Thermal Protection** | None |

## HARDWIRE ELECTRONIC

| Watts | Hatch Part Number | Input Volts | Output Volts | Safety Listing |
|---|---|---|---|---|
| 100 | LS120-100EN-347 | 347 | 120 | UL/C-UL Recognized CSA Approved |

## DIMENSIONS:

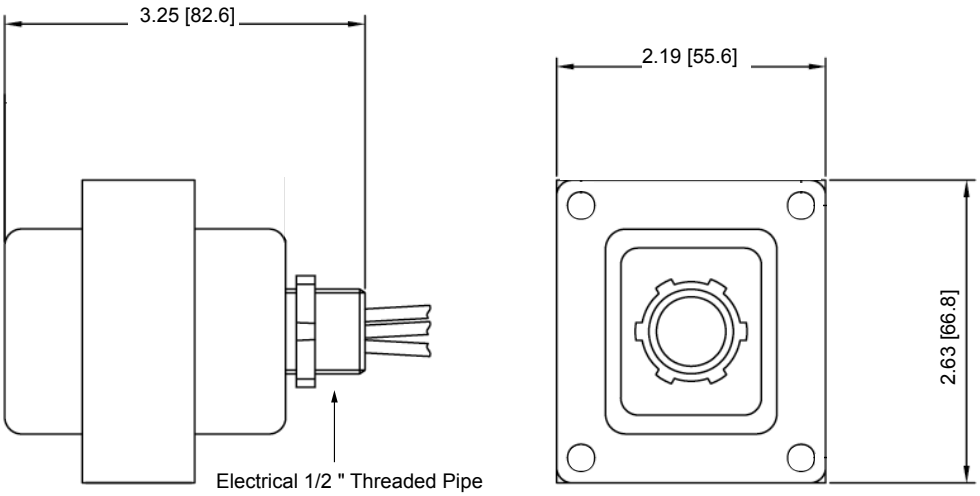


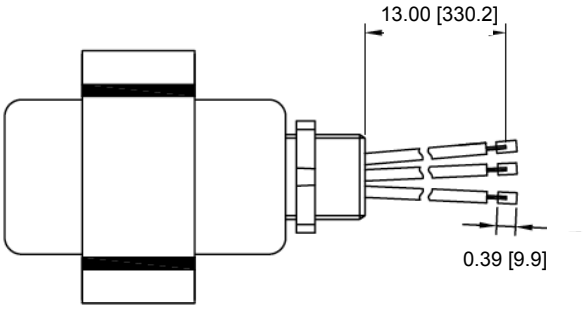


**in [mm]**

## WIRING DIAGRAM:

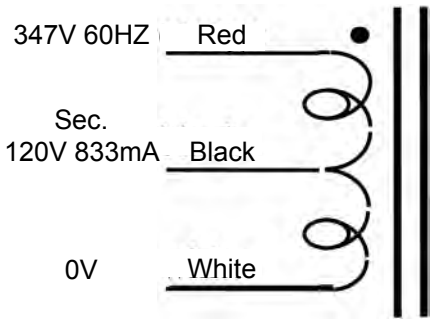


To Connect:
White: Common, to be used for both voltages.

IE: 347V connect White with Red (Input)
120V connect White with Black (Output)

# 60 WATT "TS" SERIES TOUCH DIMMING ELECTRONIC TRANSFORMER

## TS 60 WATT TOUCH DIMMING

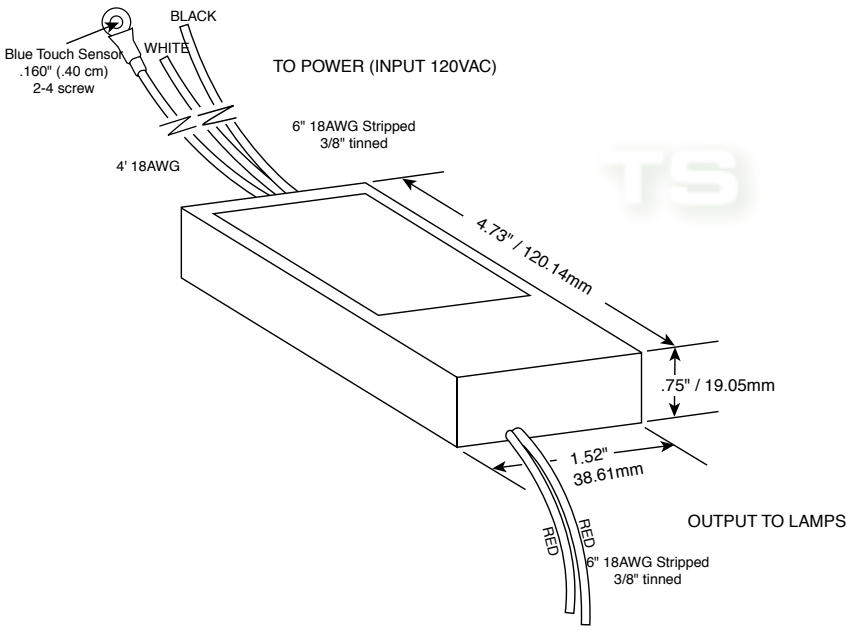


## Compact Fluorescent Hardwire Ballast Features:

- High Reliability
- Moisture and Shock Resistant
- Emits No Audible Noise
- Low Harmonic Distortion
- High Power Factor
- Lightweight, Compact Design
- Touch Dimming (4 Levels and Off)**
- Touch Metal can be Any Size
- Unaffected by Power Fluctuation or Outage**

** Touch Dimming Electronic Transformers

## Environmental Specifications

| | |
|---|---|
| **Maximum Case Temperature** | 75˚C |
| **Sound Rating** | A+ |
| **Operating Humidity** | 95% relative humidity, non-condensating |
| **Environmental Protection** | Epoxy Sealed for moisture resistance and shock vibration resistance |

## Electrical/Mechanical Specifications

**Input** .....120V 50/60 Hz

**Enclosure Material**..... UL

.....Flame Retardant,

..... High Temperature, Engineering Resin

**Color** .....Black

**Weight** .....4 oz.

**Power Factor** .....> 0.95

**Operating Frequency** .....25 KHz

**Total Harmonic Distortion**.....≤ 20%

**Safety Standard**..... c UL us

.....(Class 2-up to 60 Watt only)

**Input Leads** .....6", 18AWG stranded,
..... 105 degree C stripped 3/8" tinned

**Output Leads** .....6", 18AWG stranded,
..... 105 degree C stripped 3/8" tinned

## Soft Start Circuitry

All models of Hatch low-voltage transformers utilize a soft start circuitry to maximize lamp life. The soft start circuit ramps up the lamp filament voltage slowly when the lamp is cold.

## Electronic Short-Circuit Protection

All Hatch low-voltage transformers employ our (ESP) Electronic Short Circuit and over load Protection. The ESP sensing circuit will instantly shut down the output before any of the components are stressed if a short circuit or over load is detected. The transformer will automatically reset as soon as the short is corrected.

# TS 60 WATT

**T O U C H  D I M M I N G  E L E C T R O N I C**

| Max Watts | Min Watts | Input Volts | Output Volts | Input Amps | Output Amps | Case Style | Hatch Item No. | Safety Listing |
|---|---|---|---|---|---|---|---|---|
| 60 | 20 | 120 | 11.5 | 0.53 | 5.2 | 6 | TS12-60S | UL / C-UL Recognized Class 2 |

**All Hatch Electronic Transformers are 100% Factory Tested • Custom Designs to OEM Specifications**

## WIRING DIAGRAMS

# ELECTRONIC LOW VOLTAGE TRANSFORMERS

SERIES
## PS Plug-In Transformers
20, 60 & 75 Watt Models

Case Material: Polycarbonate

## ELECTRICAL/MECHANICAL SPECIFICATIONS:

| | |
|---|---|
| **Enclosure Material** | UL Recognized, flame retardant, high temperature engineering resin |
| **Color** | Black or White |
| **Weight** | 4 oz. |
| **Power Factor** | >.95 |
| **Operating Frequency** | 25kHz |
| **Total Harmonic Distortion** | ≤20% |
| **Output Lead** | 10' SPT-1 or SPT-2 188 AWG stripped and tinned 3/8" |

## ENVIRONMENTAL SPECIFICATIONS:

| | |
|---|---|
| **Maximum Case Temperature** | 75°C |
| **Sound Rating** | A |
| **Operating Humidity** | 95% relative humidity, non-condensating |
| **Environmental Protection** | Epoxy Sealed for moisture resistance<br>No PCBs |

## PRODUCT FEATURES :

- Low Harmonic Distortion
- High Power Factor
- High Reliability
- 100% Factory Tested
- Emits No Audible Noise
- UL Listed, Class 2 (up to 60 Watts)
- Electronic Short Circuit Protection
- Moisture and Shock Resistant
- Nickel-Plated Hospital Grade 120 Volt Plug

## APPROVALS:

- UL Listed Class 2 for 20 & 60 watt only
- CSA Certified and C-UL Listed

### Electronic Short-Circuit Protection

All hatch low-voltage transformers employ our (ESP) Electronic Short Circuit and Overload Protection. The ESP sensing circuit will instantly shut down the output before any of the components are stressed if a short circuit or overload is detected. The transformer will automatically reset as soon as the fault is corrected.

### Soft Start Circuitry

All models of Hatch low-voltage transformers utilize a soft start circuitry to maximize lamp life. The soft start circuit ramps up the lamp filament voltage slowly when the lamp is cold.

| Max Watts | Min Watts | Hatch Part Number | Input Volts | Output Volts | Input Amps | Output Amps | Case Color | Case Style | Safety Listing |
|---|---|---|---|---|---|---|---|---|---|
| 20 | 10 | PS12-20LB | 120 | 11.5 | 0.16 | 1.7 | Black | Q | UL/C-UL Listed Class 2 |
| | | PS12-20LW | | | | | White | Q | |
| 60 | 20 | PS12-60LB | 120 | 11.5 | 0.52 | 5.2 | Black | R | UL/C-UL Listed Class 2 |
| | | PS12-60LW | | | | | White | R | |
| 75 | 20 | PS12-75LB | 120 | 11.5 | 0.63 | 6.3 | Black | R | UL/C-UL Listed |

**NOTE**: It is imperative to confirm dimming control compatibility with the manufacturer and your Hatch representative.

## CASE STYLE:

Q

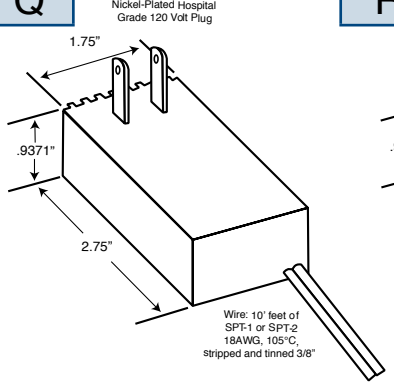


R

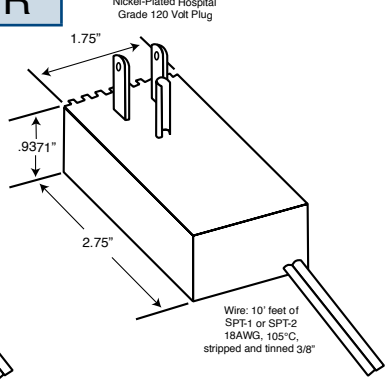


## COLOR:

Custom output cord and connectors available.
Contact Hatch for more information.

**SERIES**

# RL Hardwire Transformers

**60 & 75 Watt Models**

## DIMMABLE ELECTRONIC LOW VOLTAGE TRANSFORMER

| | |
|---|---|
| **Input Voltage** | 120Vac, 277VAC - 50-60Hz |
| **Output** | 11.5 VAC |
| **Enclosure Material** | Aluminum |
| **Weight** | 2.4 oz. |
| **Power Factor** | 0.98 |
| **Operating Frequency** | 25KHz |
| **Total Harmonic Dstortion** | ≤ 20% |
| **Input** | 8", 18AWG stranded, 105 degree C stripped 3/8" tinned |
| **Output** | 6", 18AWG stranded, 105 degree C stripped 3/8" tinned |

## ENVIRONMENTAL SPECIFICATIONS:

| | |
|---|---|
| **Maximum Case Temperature** | 90°C |
| **Minimum Starting Temperature** | -18°C |
| **Sound Rating** | A+ |
| **Operating Humidity** | 95% relative humidity, non-condensating |
| **Environmental Protection** | Epoxy Sealed for moisture resistance and shock/vibration resistance |

## PRODUCT FEATURES :

- High Reliability
- Moisture Resistant
- Emits no audible noise
- Low Harmonic Distortion
- High power factor
- Lightweight, compact design
- Small case size
- Works with most commercially available dimmers. Hardwire electronic dimmers are recommended for optimum performance.

## APPROVALS:

- Class P Type 1 Outdoors
- Class 2 Approved

c UL us

## ELECTRICAL FEATURES:

### Electronic Short-Circuit Protection

All hatch low-voltage transformers employ our (ESP) Electronic Short Circuit and overload Protection. The ESP sensing circuit will instantly shut down the output before any of the components are stressed if a short circuit or over load is detected. The transformer will automatically reset as soon as the fault is corrected.

## HARDWIRE ELECTRONIC

| Max Watts | Min Watts | Hatch Part Number | Input Volts | Output Volts | Input Amps | Output Amps | Case Style | Safety Listing |
|---|---|---|---|---|---|---|---|---|
| 60 | 10 | RL12-60A | 120 | 11.5 | 0.50 | 5.3 | A | UL/C-UL Recognized, Class 2 |
| **75 Watt** | | | | | | | | |
| 75 | 10 | RL12-75A | 120 | 11.5 | 0.63 | 6.3 | A | UL/C-UL Recognized, Class 2 |
| | | RL12-75ABF | | | | | B | |
| | | RL12-75A-277* | 277 | | 0.27 | 6.25 | A | |
| | | RL12-75ABF-277* | | | | | B | |

* NOTE: Must use a minimum of 20 watts when using dimmers. It is also important to confirm dimming controls compatibility with the manufacturer and your Hatch representative. 277 Volt dimming not recomended.

## DIMENSIONS:

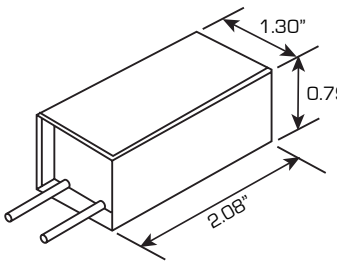


CASE STYLE

RL 60 through 75 Watt | A

* Side Lead

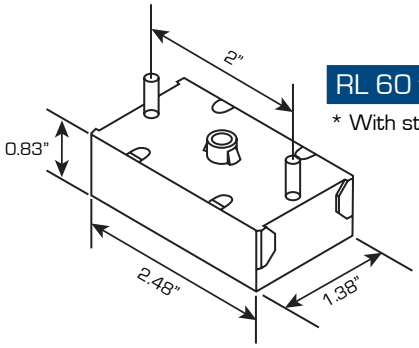


CASE STYLE

RL 60 through 75 Bottom Feed | B

* With studs

## WIRING DIAGRAM:

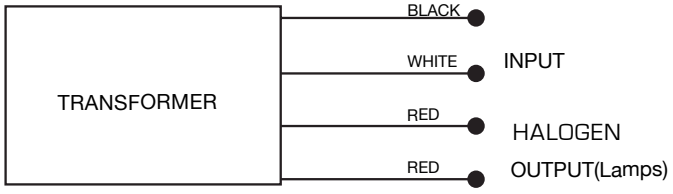


## NOTES:



REV: 1.0 281212

# Electronic Transformers

# 60 & 75 WATT "RS" SERIES ELECTRONIC TRANSFORMERS

## PLASTIC CASE

## RS12-60 AND RS12-75

## Electrical/Mechanical Specifications

### Soft Start Circuitry

All models of Hatch low-voltage transformers utilize a soft start circuitry to maximize lamp life. The soft start circuit ramps up the lamp filament voltage slowly when the lamp is cold.

Note: Instant Start on Hot Lamp Re-Strike

### Electronic Short-Circuit Protection

All Hatch low-voltage transformers employ our (ESP) Electronic Short Circuit and over load Protection. The ESP sensing circuit will instantly shut down the output before any of the components are stressed if a short circuit or over load is detected. The transformer will automatically reset as soon as the fault is corrected.

NOTE: High temperature 3M double sided tape available for use with side lead models only for mounting transformer to enclosure.

# 60&75 Watt RS Series

## Electronic Low Voltage Transformer Product Features:

- High Reliability
- Moisture Resistant
- Emits No Audible Noise
- Low Harmonic Distortion
- High Power Factor
- Lightweight, Compact Design
- Small Case Size
- Works with most commercially available dimmers. Hardwire electronic dimmers are recommended for optimum performance

## Environmental Specifications

| | |
|---|---|
| **Maximum Case Temperature** | 80℃ |
| **Minimum Starting Temperature** | -30℃ |
| **Sound Rating** | A+ |
| **Operating Humidity** | 95% relative humidity, non-condensating |
| **Environmental Protection** | Epoxy Sealed for moisture resistance and shock/vibration resistance |
| **Safety Listing** | Class P Type 1 outdoor |

## Electrical/Mechanical Specifications

**Input**.....120VAC or 277VAC - 50/60 Hz
**Output**.....11.5 VAC
**Enclosure Material**.....Polycarbonate
**Weight**.....2.4 oz.
**Power Factor**.....> 0.95
**Operating Frequency**.....25 KHz
**Total Harmonic Distortion**.....≤ 20%
**Safety Standard**..... .....(Class 2-up to 60 Watt only)
**Input Leads**.....6", 18AWG stranded, ..... 105 degree C stripped 3/8" tinned
**Output Leads**.....6", 18AWG stranded, ..... 105 degree C stripped 3/8" tinned

hatch

# Electronic Transformer

## 60&75 Watt RS (Plastic Case) Series

### DIMENSIONS

**1.**
Side Lead

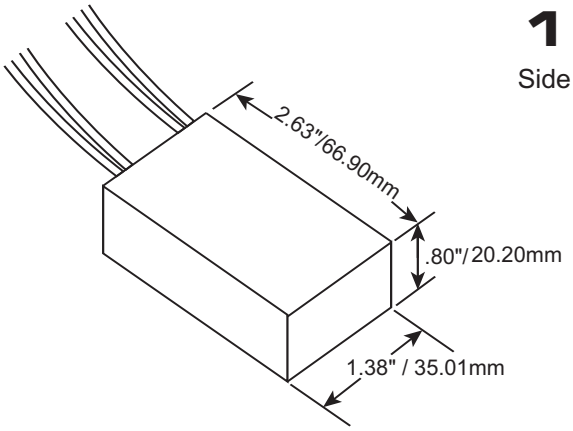


**2.**
Bottom Feed

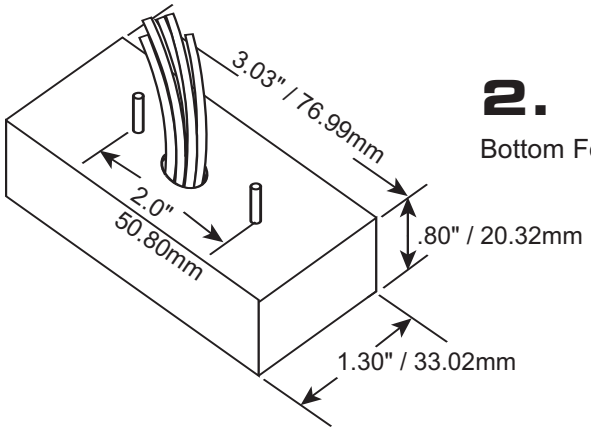


### WIRING DIAGRAMS

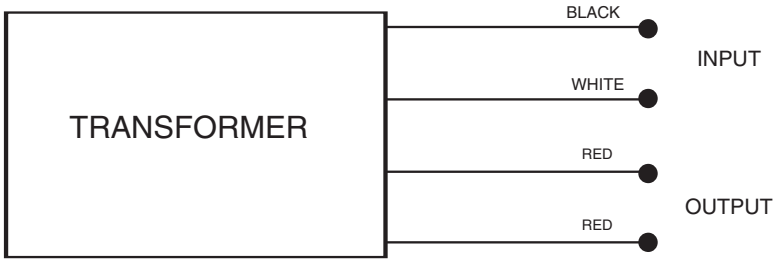


**DIAGRAM A**

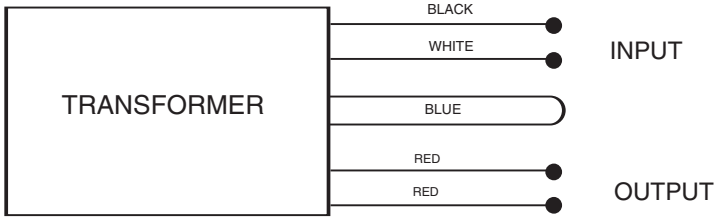


**DIAGRAM B**

**WD MODELS HAVE DIMMING LOOP**

### HARDWIRE ELECTRONIC

| Max Watts | Min Watts | Input Volts | Input Amps | Output Volts | Output Amps | Case Style | Wiring Dia. | Hatch Item No. | Safety Listing |
|---|---|---|---|---|---|---|---|---|---|
| 60 | 10 | 120 | 0.50 | 11.5 | 5.3 | 1 | A | RS12-60NW | UL/C-UL Recognized, Class 2 |
| | | | | | | | | | |
| 75 | 10 | 120 | 0.63 | 11.5 | 6.6 | 1 | A | RS12-75 NW | UL/C-UL Recognized |
| | | | | | | 1 | B | RS12-75WD | |
| | | | | | | 2 | A | RS12-75BF | |

*Note: Must use a minimum of 20 watts when using dimmers.

SERIES
# RS Hardwire Transformers
60 & 80 Watt Models

## ELECTRONIC LOW VOLTAGE TRANSFORMER

| | |
|---|---|
| **Input Voltage** | 120Vac, 277VAC or 230VAC - 50-60Hz |
| **Output** | 11.5 VAC or 23.5 VAC |
| **Enclosure Material** | Aluminum |
| **Weight** | 24 oz. |
| **Power Factor** | > 0.95 |
| **Operating Frequency** | 25KHz |
| **Total Harmonic Distortion** | ≤ 20% |
| **Input** | 6", 18AWG stranded, 105 degree C stripped 3/8" tinned |
| **Output** | 6", 18AWG stranded, 105 degree C stripped 3/8" tinned |

## ENVIRONMENTAL SPECIFICATIONS:

| | |
|---|---|
| **Maximum Case Temperature** | 90°C |
| **Minimum Starting Temperature** | -30°C |
| **Sound Rating** | A+ |
| **Operating Humidity** | 95% relative humidity, non-condensating |
| **Environmental Protection** | Epoxy Sealed for moisture resistance and shock/vibration resistance |

## PRODUCT FEATURES :

- High Reliability
- Moisture Resistant
- Emits no audible noise
- Low Harmonic Distortion
- High power factor
- Lightweight, compact design
- Small case size
- Works with most commercially available dimmers. Hardwire electronic dimmers are recommended for optimum performance.

## APPROVALS:

- Class P Type 1 Outdoors
- Class 2 Approved

c UL us

## ELECTRICAL FEATURES:

### Soft Start Circuitry

All models of Hatch low-voltage transformers utilize a soft start circuitry to maximize lamp life. The soft start circuit ramps up the lamp filament voltage slowly when the lamp is cold.

NOTE: Instant Start on Hot Lamp Re-Strike

### Electronic Short-Circuit Protection

All hatch low-voltage transformers employ our (ESP) Electronic Short Circuit and overload Protection. The ESP sensing circuit will instantly shut down the output before any of the components are stressed if a short circuit or over load is detected. The transformer will automatically reset as soon as the fault is corrected.

## HARDWIRE ELECTRONIC

| Max Watts | Min Watts | Hatch Part Number | Input Volts | Output Volts | Input Amps | Output Amps | Case Style | Wire Diagram | Safety Listing |
|---|---|---|---|---|---|---|---|---|---|
| 60 | 5 | RS12-60M | 120 | 11.5 | 0.5 | 5.3 | A | I | UL/C-UL Recognized, Class 2 |
| | | RS12-60MWD | | | | | D | II | |
| | | RS12-60-BF | | | | | B | I | |
| **80 Watt** | | | | | | | | | |
| 80 | 5 | RS12-80 | 120 | 11.5 | 0.67 | 7.0 | A | I | UL/C-UL Recognized |
| | | RS12-80MG | | | | | A | IV | |
| | | RS12-80MGN | | | | | A | IV | |
| | | RS12-80MWD | | | | | D | III | |
| | | RS12-80BFS | | | | | B | I | |
| | | RS12-80-230 | 230 | | 0.35 | 7.0 | A | I | |
| | | RS12-80-277* | 277 | 11.5 | 0.29 | 7.0 | A | I | |
| | | RS12-80-277WD* | | | | | D | III | |
| | | RS12-80-277BF* | | | | | C | I | |

* NOTE: Must use a minimum of 20 watts when using dimmers. It is also important to confirm dimming controls compatibility with the manufacturer and your Hatch representative. 277 Volt dimming is not recomended.

**DIMENSIONAL & WIRE DIAGRAMS CAN BE FOUND ON PAGE 2**

# ELECTRONIC LOW VOLTAGE TRANSFORMER

## DIMENSIONS:

CASE STYLE A
RS 60 through 80 Watt
* Side Lead

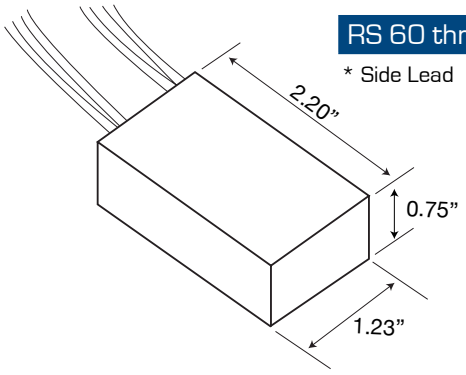


CASE STYLE B
RS 60 through 80 Bottom Feed
* With studs

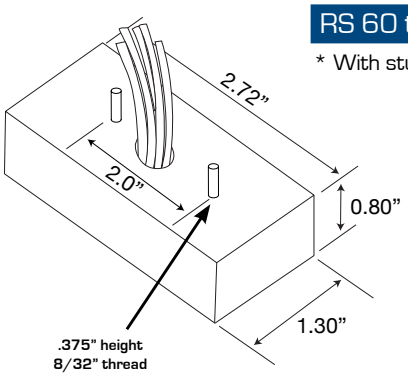


CASE STYLE C
RS 20 through 60 Watt
277 Volt Bottom Feed
* With Studs

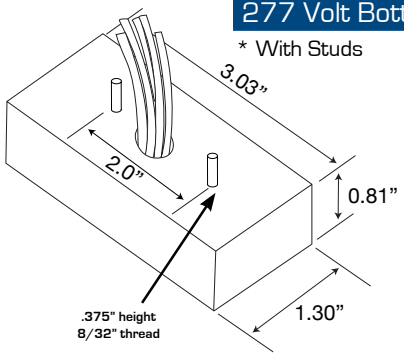


CASE STYLE D
RS With Dimming Loop
* Side Lead

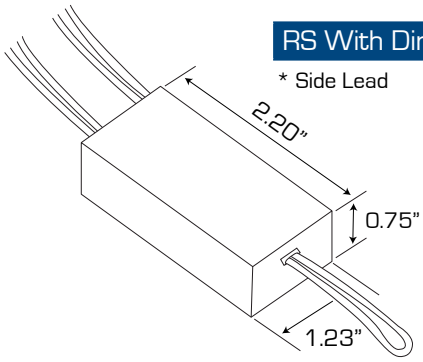


## WIRING DIAGRAMS:

### I. Halogen Lamps

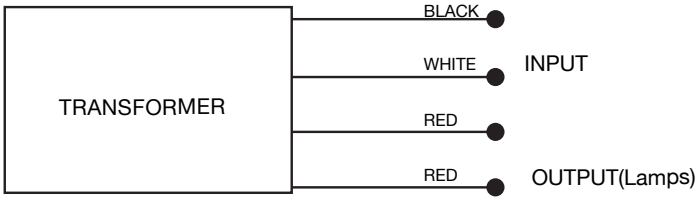


### II. Halogen Lamps

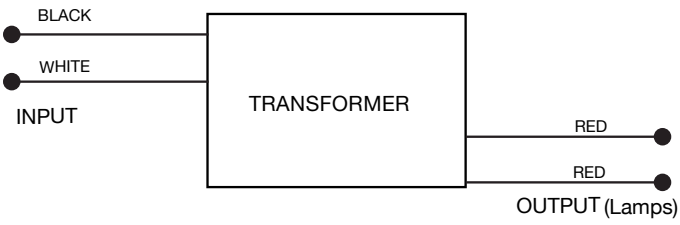


### III. Halogen Lamps

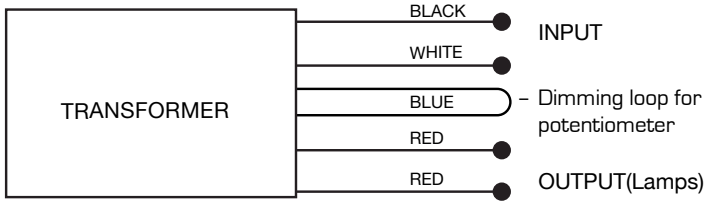


### IV. Halogen Lamps

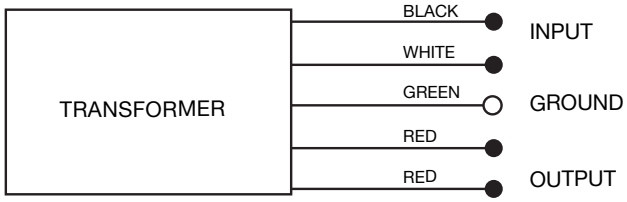

# hatch

**Series**
# RS Hardwire Transformers
**105 & 108 Watt Models**

## ELECTRONIC LOW VOLTAGE TRANSFORMER

| | |
|---|---|
| **Input Voltage** | 120VAC, 277VAC - 50-60Hz |
| **Output** | 11.5 VAC |
| **Enclosure Material** | Aluminum |
| **Weight** | 4 oz. |
| **Power Factor** | > 0.95 |
| **Operating Frequency** | 25KHz |
| **Total Harmonic Dstortion** | ≤ 20% |
| **Input** | 6", 18AWG stranded, 105 degree C stripped 3/8" tinned |
| **Output** | 6", 18AWG stranded, 105 degree C stripped 3/8" tinned |

## ENVIRONMENTAL SPECIFICATIONS:

| | |
|---|---|
| **Maximum Case Temperature** | 90°C |
| **Minimum Starting Temperature** | -30°C |
| **Sound Rating** | A+ |
| **Operating Humidity** | 95% relative humidity, non-condensating |
| **Environmental Protection** | Epoxy Sealed for moisture resistance and shock/vibration resistance |

## PRODUCT FEATURES :

- High Reliability
- Moisture Resistant
- Emits no audible noise
- Low Harmonic Distortion
- High power factor
- Lightweight, compact design
- Small case size
- Works with most commercially available dimmers. Hardwire electronic dimmers are recommended for optimum performance.

## APPROVALS:

- Rated for Dry and Damp Locations

c UL us

RoHS COMPLIANT

## ELECTRICAL FEATURES:

### Soft Start Circuitry

All models of Hatch low-voltage transformers utilize a soft start circuitry to maximize lamp life. The soft start circuit ramps up the lamp filament voltage slowly when the lamp is cold.

NOTE: Instant Start on Hot Lamp Re-Strike

### Electronic Short-Circuit Protection

All hatch low-voltage transformers employ our (ESP) Electronic Short Circuit and overload Protection. The ESP sensing circuit will instantly shut down the output before any of the components are stressed if a short circuit or over load is detected. The transformer will automatically reset as soon as the fault is corrected.

## HARDWIRE ELECTRONIC

| Max Watts | Min Watts | Hatch Part Number | Input Volts | Output Volts | Input Amps | Output Amps | Case Style | Wiring Diagram | Safety Listing |
|---|---|---|---|---|---|---|---|---|---|
| 105 | 5 | RS12-105 | 120 | 11.5 | 0.88 | 9.13 | A | I | UL/C-UL Recognized |
| | | RS12-105BF | | | | | B | | |
| | | RS12-105GN | | | | | A | II | |
| | | RS12-105-277* | 277 | | 0.38 | | A | I | |
| | | RS12-105-277BF* | | | | | B | | |
| **108 Watt** | | | | | | | | | |
| 108 | 5 | RS12-108 | 120 | 11.5 | 0.90 | 9.4 | A | I | UL/C-UL Recognized |
| | | RS12-108BF | | | | | B | | |
| | | RS24-108** | | 23.5 | | 4.6 | A | | |
| | | RS12-108-277BF* | 277 | 11.5 | 0.39 | 9.4 | A | | |

* NOTE: Must use a minimum of 10 watts when using dimmers. It is also important to confirm dimming controls compatibility with the manufacturer and your Hatch representative.
** UL Pending 277 Volt dimming not recomended.

## DIMENSIONS:

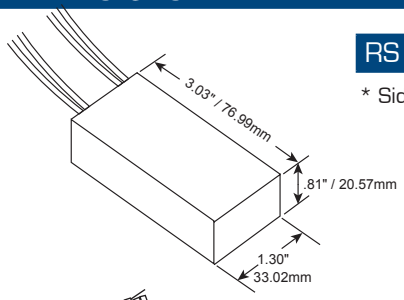


CASE STYLE

| RS 105 through 108 Watt | A |
|---|---|

* Side Lead

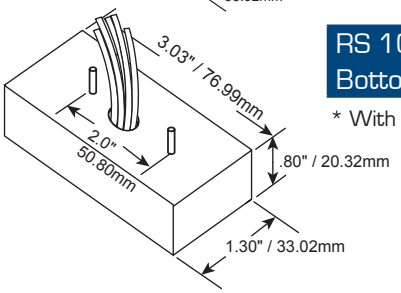


CASE STYLE

| RS 105 through 108 Bottom Feed | B |
|---|---|

* With studs

## WIRING DIAGRAM I:

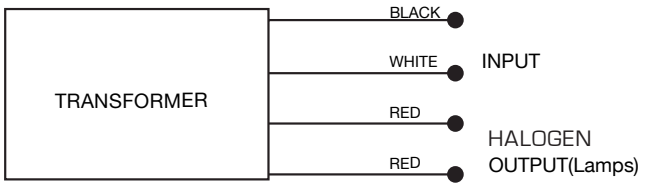


## WIRING DIAGRAM II:

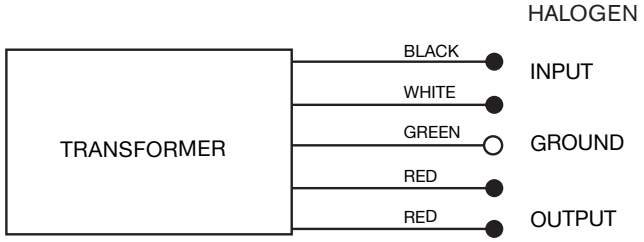




REV: 07212016

SERIES

# RS Hardwire Transformers

150 Watt Models

## ELECTRONIC LOW VOLTAGE TRANSFORMER

| | |
|---|---|
| **Input Voltage** | 120VAC, 277VAC - 50-60Hz |
| **Output** | 11.5 VAC |
| **Enclosure Material** | Aluminum |
| **Weight** | 6.4 oz. |
| **Power Factor** | > 0.95 |
| **Operating Frequency** | 25KHz |
| **Total Harmonic Distortion** | ≤ 20% |
| **Input** | 6", 18AWG stranded, 105°C stripped 3/8" tinned |
| **Output** | 6", 18AWG stranded, 105°C stripped 3/8" tinned |

## ENVIRONMENTAL SPECIFICATIONS

| | |
|---|---|
| **Maximum Case Temperature** | 90°C |
| **Minimum Starting Temperature** | -30°C |
| **Sound Rating** | A+ |
| **Operating Humidity** | 95% relative humidity, non-condensating |
| **Environmental Protection** | Epoxy Sealed for moisture resistance and shock/vibration resistance |

## PRODUCT FEATURES:

- High Reliability
- Moisture Resistant
- Emits no audible noise
- Low Harmonic Distortion
- High power factor
- Lightweight, compact design
- Small case size
- Works with most commercially available dimmers. Hardwire electronic dimmers are recommended for optimum performance.

## APPROVALS:

- Class P Type 1 Outdoors

c UL us

## ELECTRICAL FEATURES

### Soft Start Circuitry

All models of Hatch low-voltage transformers utilize a soft start circuitry to maximize lamp life. The soft start circuit ramps up the lamp filament voltage slowly when the lamp is cold.

NOTE: Instant Start on Hot Lamp Re-Strike

### Electronic Short Circuit Program

All Hatch low-voltage transformers employ our (ESP) Electronic Short Circuit and overload protection. The ESP sensing circuit will instantly shut down the output before any of the components are stressed if a short circuit or over load is detected. The transformer will automatically reset as soon as the fault is corrected.

## HARDWIRE ELECTRONIC

| Max Watts | Min Watts | Hatch Part Number | Input Volts | Output Volts | Input Amps | Output Amps | Case Style | Safety Listing |
|---|---|---|---|---|---|---|---|---|
| 150 | 10 | RS12-150 | 120 | 11.5 | 1.25 | 13.05 | A | UL/C-UL Recognized |
| | | RS12-150BF | | | | | B | |
| | | RS24-150 | | 23.5 | | 6.39 | A | |
| | | RS12-150-277* | 277 | 11.5 | 0.55 | 13.05 | A | |
| | | RS12-150-277BF* | | | | | B | |

* NOTE: Must use a minimum of 20 watts when using dimmers. It is also important to confirm dimming controls compatibility with the manufacturer and your Hatch representative. 277 Volt dimming not recommended.

## DIMENSIONS:

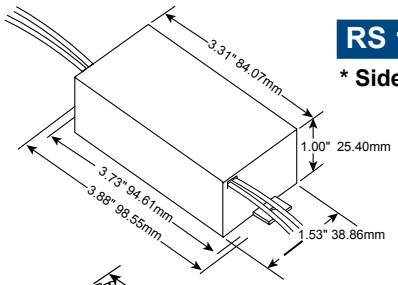


CASE STYLE **A**

**RS 150 Watt**

*** Side Lead**

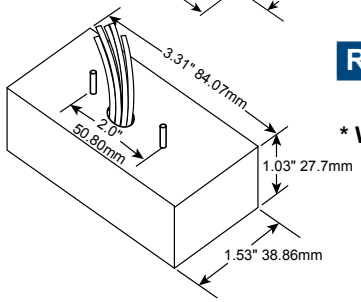


CASE STYLE **B**

**RS 150 Bottom Feed**

*** With studs**

## WIRING DIAGRAM:

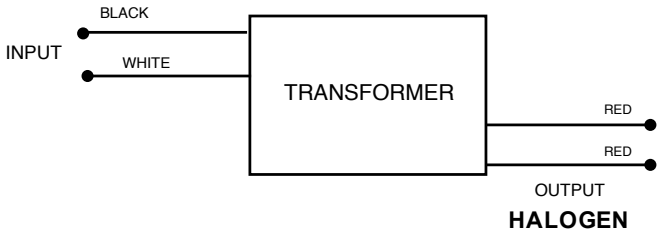


## NOTES:



REV: 070113

# hatch

**Series**
**RS-150KO**
**150 Watt Knockout**

## ELECTRONIC LOW VOLTAGE KNOCKOUT TRANSFORMER

| | |
|---|---|
| **Input Voltage** | 120Vac - 50-60Hz |
| **Output** | 11.5 VAC or 23.5 VAC |
| **Enclosure Material** | Metal |
| **Weight** | 16 oz. |
| **Power Factor** | > 0.95 |
| **Operating Frequency** | 25KHz |
| **Total Harmonic Distortion** | ≤ 20% |
| **Input** | 6", 18AWG stranded, 105 degree C stripped 3/8" tinned |
| **Output** | 6", 18AWG stranded, 105 degree C stripped 3/8" tinned |

## ENVIRONMENTAL SPECIFICATIONS:

| | |
|---|---|
| **Maximum Case Temperature** | 80°C |
| **Minimum Starting Temperature** | -30°C |
| **Sound Rating** | A+ |
| **Operating Humidity** | 95% relative humidity, non-condensating |
| **Environmental Protection** | Epoxy Sealed for moisture resistance and shock/vibration resistance |

## PRODUCT FEATURES :

- High Reliability
- Moisture Resistant
- Emits no audible noise
- Low Harmonic Distortion
- High power factor
- Lightweight, compact design
- Small case size
- Works with most commercially available dimmers. Hardwire electronic dimmers are recommended for optimum performance.
- Available in Black and White Cases (White cases special order only)

## APPROVALS:

-ETL listed

Intertek

## ELECTRICAL FEATURES:

### Soft Start Circuitry

All models of Hatch low-voltage transformers utilize a soft start circuitry to maximize lamp life. The soft start circuit ramps up the lamp filament voltage slowly when the lamp is cold.

NOTE: Instant Start on Hot Lamp Re-Strike

### Electronic Short-Circuit Protection

All hatch low-voltage transformers employ our (ESP) Electronic Short Circuit and overload Protection. The ESP sensing circuit will instantly shut down the output before any of the components are stressed if a short circuit or over load is detected. The transformer will automatically reset as soon as the fault is corrected.

## HARDWIRE ELECTRONIC

| Hatch Part Number | Max Watts | * Min Watts | Input Volts | Input Amps. | Output Volts | Output Amps | Color | Case Quantity | Safety Listing |
|---|---|---|---|---|---|---|---|---|---|
| RS12-150KO | 150 | 10 | 120 | 1.25 | 11.5 | 13.05 | BLACK | 18/Case | ETL Listed |
| RS24-150KO | | | | | 23.5 | 6.39 | BLACK | | |
| RS12-150KOW | | | | | 11.5 | 13.05 | WHITE | | |
| RS24-150KOW | | | | | 23.5 | 6.39 | WHITE | | |

* NOTE: Must use a minimum of 20 watts when using dimmers. It is also important to confirm dimming controls compatibility with the manufacturer and your Hatch representative.

## DIMENSIONS:

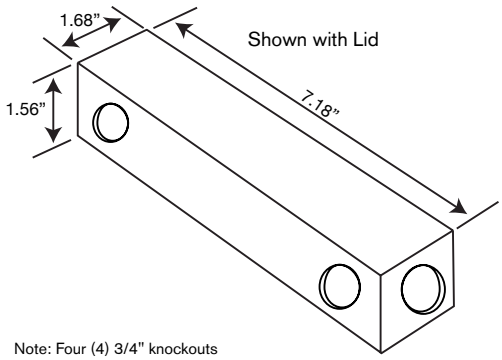


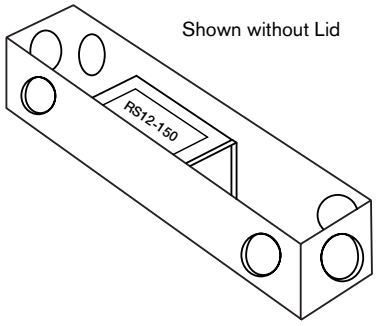


Note: Four (4) 3/4" knockouts on each end of case.

**Ground wire is attached with lug and nut to the inside of the enclosure**

## WIRING DIAGRAM:

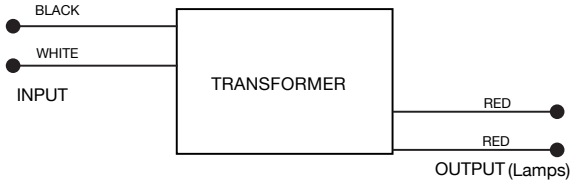

SERIES
# RS-180KO
180 Watt Knockout — Class 2

## ELECTRONIC LOW VOLTAGE KNOCKOUT TRANSFORMER

| | |
|---|---|
| **Input Voltage** | 120Vac - 50-60Hz |
| **Output** | 11.5 VAC or 23.5 VAC |
| **Enclosure Material** | Metal |
| **Weight** | 18 oz. |
| **Power Factor** | > 0.95 |
| **Operating Frequency** | 25KHz |
| **Total Harmonic Distortion** | ≤ 20% |
| **Input** | 6", 18AWG stranded, 105 degree C stripped 3/8" tinned |
| **Output** | 6", 18AWG stranded, 105 degree C stripped 3/8" tinned |

## ENVIRONMENTAL SPECIFICATIONS:

| | |
|---|---|
| **Maximum Case Temperature** | 80°C |
| **Minimum Starting Temperature** | -30°C |
| **Sound Rating** | A+ |
| **Operating Humidity** | 95% relative humidity, non-condensating |
| **Environmental Protection** | Epoxy Sealed for moisture resistance and shock/vibration resistance |

## PRODUCT FEATURES :

- High Reliability
- Moisture Resistant
- Emits no audible noise
- Low Harmonic Distortion
- High power factor
- Lightweight, compact design
- Small case size
- Works with most commercially available dimmers. Hardwire electronic dimmers are recommended for optimum performance.
- Available in Black and White Cases (White cases special order only)

## APPROVALS:

-ETL listed

Intertek

## ELECTRICAL FEATURES:

### Soft Start Circuitry

All models of Hatch low-voltage transformers utilize a soft start circuitry to maximize lamp life. The soft start circuit ramps up the lamp filament voltage slowly when the lamp is cold.

NOTE: Instant Start on Hot Lamp Re-Strike

### Electronic Short-Circuit Protection

All hatch low-voltage transformers employ our (ESP) Electronic Short Circuit and overload Protection. The ESP sensing circuit will instantly shut down the output before any of the components are stressed if a short circuit or over load is detected. The transformer will automatically reset as soon as the fault is corrected.

## HARDWIRE ELECTRONIC

| Hatch Part Number | Max Watts | * Min Watts | Input Volts | Input Amps. | Output Volts | Output Amps | Color | Case Quantity | Safety Listing |
|---|---|---|---|---|---|---|---|---|---|
| RS12-180KO | 180 | 15 (5W Per Transformer) | 120 | 1.50 | 11.5 | 15.7 | BLACK | 12/Case | ETL Listed (Class 2) |
| RS24-180KO | | | | | 23.5 | 7.7 | BLACK | | |
| RS12-180KOW | | | | | 11.5 | 15.7 | WHITE | | |
| RS24-180KOW | | | | | 23.5 | 7.7 | WHITE | | |

* NOTE: Must use a minimum of 20 watts per transformer when using dimmers. It is also important to confirm dimming controls compatibility with the manufacturer and your Hatch representative.

## DIMENSIONS:

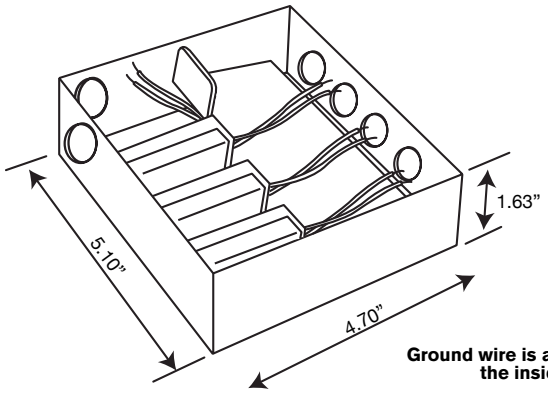


**Ground wire is attached with lug and nut to the inside of the enclosure**

## WIRING DIAGRAM:

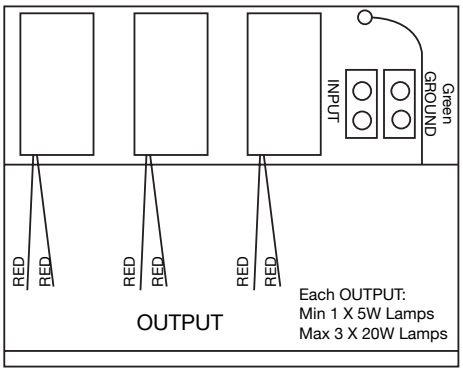

SERIES

# RS Hardwire Transformers

300 Watt Models

## ELECTRONIC LOW VOLTAGE TRANSFORMER

| | |
|---|---|
| **Input Voltage** | 120VAC, 277VAC - 50-60Hz |
| **Output** | 11.5 VAC |
| **Enclosure Material** | Aluminum |
| **Weight** | 12.8 oz. |
| **Power Factor** | > 0.95 |
| **Operating Frequency** | 25KHz |
| **Total Harmonic Dstortion** | ≤ 20% |
| **Input** | 6", 18AWG stranded, 105 degree C stripped 3/8" tinned |
| **Output** | 6", 18AWG stranded, 105 degree C stripped 3/8" tinned |

## ENVIRONMENTAL SPECIFICATIONS:

| | |
|---|---|
| **Maximum Case Temperature** | 80°C |
| **Minimum Starting Temperature** | -30°C |
| **Sound Rating** | A+ |
| **Operating Humidity** | 95% relative humidity, non-condensating |
| **Environmental Protection** | Epoxy Sealed for moisture resistance and shock/vibration resistance |

## PRODUCT FEATURES :

- High Reliability
- Moisture Resistant
- Emits no audible noise
- Low Harmonic Distortion
- High power factor
- Lightweight, compact design
- Small case size
- Works with most commercially available dimmers. Hardwire electronic dimmers are recommended for optimum performance.

## APPROVALS:

- Class P Type 1 Outdoors

c UL us

## ELECTRICAL FEATURES:

### Soft Start Circuitry

All models of Hatch low-voltage transformers utilize a soft start circuitry to maximize lamp life. The soft start circuit ramps up the lamp filament voltage slowly when the lamp is cold.

NOTE: Instant Start on Hot Lamp Re-Strike

### Electronic Short-Circuit Protection

All hatch low-voltage transformers employ our (ESP) Electronic Short Circuit and overload Protection. The ESP sensing circuit will instantly shut down the output before any of the components are stressed if a short circuit or over load is detected. The transformer will automatically reset as soon as the fault is corrected.

## HARDWIRE ELECTRONIC

| Max Watts | Min Watts | Hatch Part Number | Input Volts | Output Volts | Input Amps | Output Amps | Case Style | Safety Listing |
|---|---|---|---|---|---|---|---|---|
| 300 | 50 | RS12-300 | 120 | 11.5 | 2.5 | 26.1 | A | UL/C-UL Recognized |
| | | RS12-300N | | | | | B | |
| | | RS12-300BF | | | | | C | |
| | | RS12-300-277* | 277 | | 1.08 | | A | |

* NOTE: Must use a minimum of 75 watts when using dimmers. It is also important to confirm dimming controls compatibility with the manufacturer and your Hatch representative. 277 Volt dimming not recomended.

## DIMENSIONS:

CASE STYLE

RS 300 Watt — A

* Side Lead with Feet

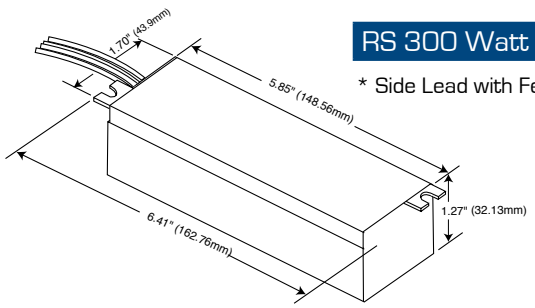


CASE STYLE

RS 300 Watt — B

* Side Lead without Feet

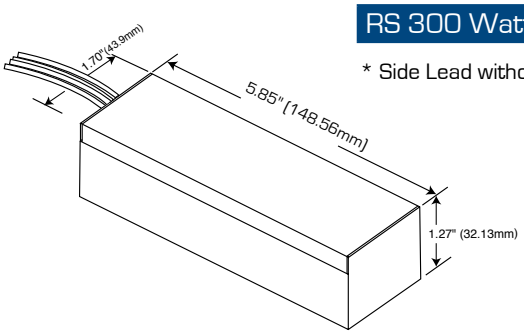


CASE STYLE

RS 300 Watt Bottom Feed — C

* With Studs

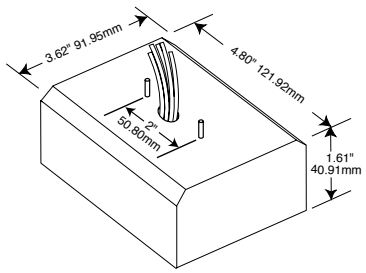


## WIRING DIAGRAM:

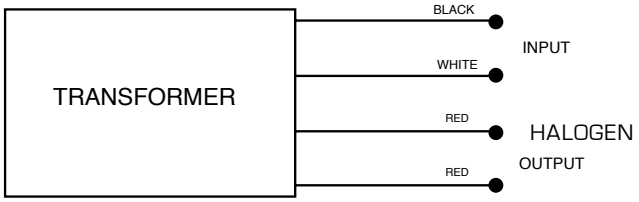




REV: 1.0 070113

# 105 AND 150 WATT "V" SERIES HARDWIRE ELECTRONIC TRANSFORMER

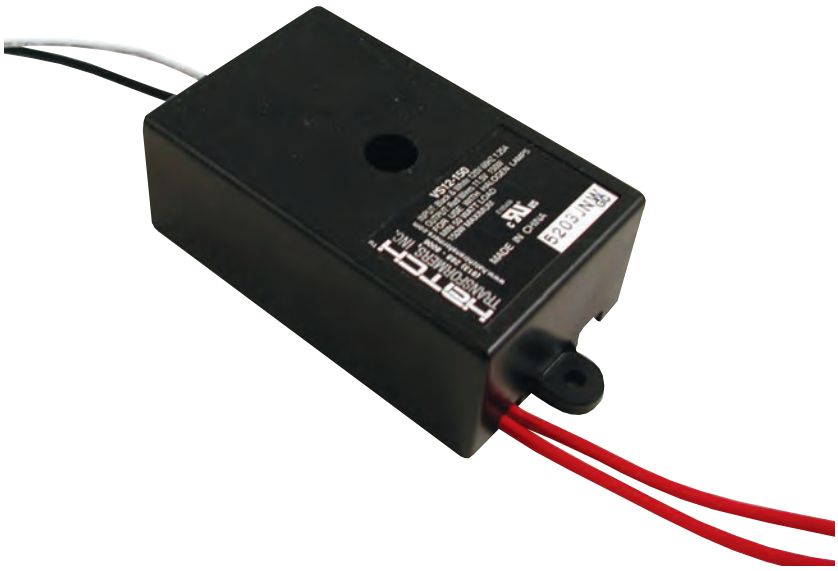

## Electronic Low Voltage Transformer:

- High Reliability
- Moisture and Shock Resistant
- Emits No Audible Noise
- Low Harmonic Distortion
- High Power Factor
- Lightweight, Compact Design
- Works with most commercially available dimmers. Hardwire electronic dimmers are recommended for optimum performance

## Environmental Specifications

| | |
|---|---|
| **Maximum Case Temperature** | 80℃ |
| **Sound Rating** | A+ |
| **Operating Humidity** | 95% relative humidity, non-condensating |
| **Environmental Protection** | Epoxy sealed for moisture resistance and shock vibration resistance |

## Electrical/Mechanical Specifications

**Input** .....120 V 50/60 Hz

**Enclosure Material**.....

.....Flame Retardant,

.....High Temperature, Engineering Resin

**Color** .....Black

**Weight** .....5 oz.

**Power Factor** .....> 0.95

**Operating Frequency** .....25 KHz

**Total Harmonic Distortion**.....≤ 20%

**Safety Standard**.....

**Input Leads** .....6", 18AWG stranded,
..... 105 degree C stripped 3/8" tinned

**Output Leads** .....6", 18AWG stranded,
..... 105 degree C stripped 3/8" tinned

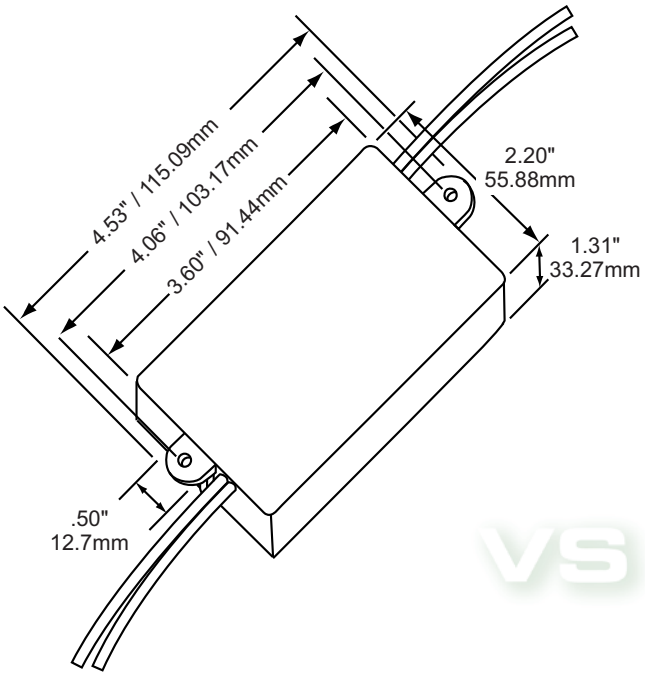


## Soft Start Circuitry

All models of Hatch low-voltage transformers utilize a soft start circuitry to maximize lamp life. The soft start circuit ramps up the lamp filament voltage slowly when the lamp is cold.

## Electronic Short-Circuit Protection

All Hatch low-voltage transformers employ our (ESP) Electronic Short Circuit and over load Protection. The ESP sensing circuit will instantly shut down the output before any of the components are stressed if a short circuit or over load is detected. The transformer will automatically reset as soon as the fault is corrected.

# VS 105/150 WATT

## H A R D W I R E  E L E C T R O N I C

| Max Watts | Min Watts | Input Volts | Output Volts | Input Amps | Output Amps | Case Style | Hatch Item No. | Safety Listing |
|---|---|---|---|---|---|---|---|---|
| 105 | 50 | 120 | 11.5 | 0.88 | 9.2 | 1 | VS12-105J | UL / C-UL Recognized |
| 150 | 50 | 120 | 11.5 | 1.25 | 12.9 | 1 | VS12-150J | |
| | | | 20.0 | 1.25 | 5.5 | 1 | VS21-150AF | |
| | | | 23.5 | 1.25 | 6.4 | 1 | VS24-150J | |

* Must use a minimum of 50 watts when using a dimmer.

WIRING DIAGRAMS

## W I R I N G  D I A G R A M S

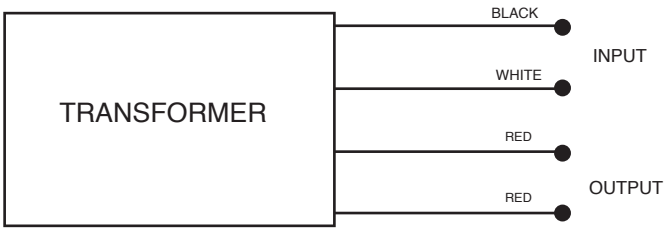

# 60 & 75 WATT “V” SERIES ELECTRONIC TRANSFORMER

## Electronic Low Voltage Transformer:

- High Reliability
- Moisture and Shock Resistant
- Emits No Audible Noise
- Low Harmonic Distortion
- High Power Factor
- Lightweight, Compact Design
- Works with most commercially available dimmers. Hardwire electronic dimmers are recommended for optimum performance

## Environmental Specifications

| | |
|---|---|
| **Maximum Case Temperature** | 80˚c |
| **Sound Rating** | A+ |
| **Operating Humidity** | 95% relative humidity, non-condensating |
| **Environmental Protection** | Epoxy Sealed for moisture resistance and shock vibration resistance |

## Electrical/Mechanical Specifications

**Enclosure Material** ..... UL
.....Flame Retardant,
.....High Temperature, Engineering Resin

**Color** .....Black

**Weight** .....4 oz.

**Power Factor** .....> 0.95

**Operating Frequency** .....25 KHz

**Total Harmonic Distortion**.....≤ 20%

**Safety Standard** ..... c UL us
.....(Class 2-up to 60 Watt only)

**Input Leads** .....6”, 18AWG stranded,
..... 105 degree C stripped 3/8” tinned

**Output Leads** .....6”, 18AWG stranded,
..... 105 degree C stripped 3/8” tinned

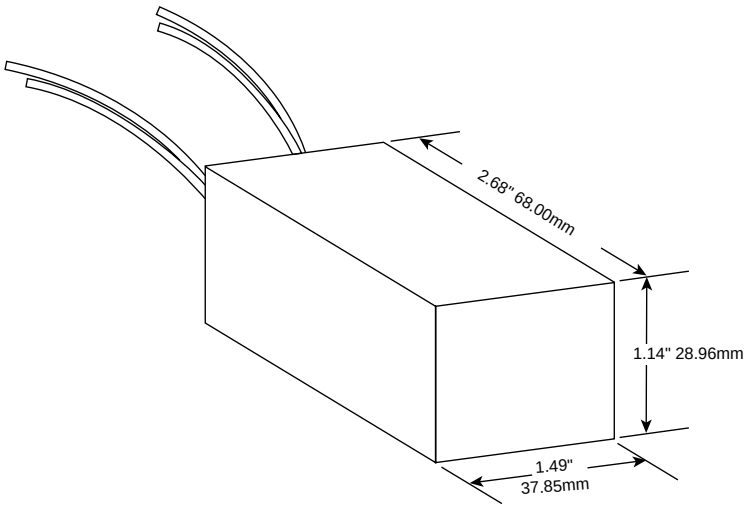


Note: VS style 60 and 75 Watt Transformers are provided with UL approved high temperature 3M double sided tape for adhering transformer to enclosure.

## Soft Start Circuitry

All models of Hatch low-voltage transformers utilize a soft start circuitry to maximize lamp life. The soft start circuit ramps up the lamp filament voltage slowly when the lamp is cold.

## Electronic Short-Circuit Protection

All Hatch low-voltage transformers employ our (ESP) Electronic Short Circuit and over load Protection. The ESP sensing circuit will instantly shut down the output before any of the components are stressed if a short circuit or over load is detected. The transformer will automatically reset as soon as the fault is corrected.

# VS STYLE 60 AND 75 WATT ELECTRONIC TRANSFORMERS

H A R D W I R E  E L E C T R O N I C

| Max Watts | Min Watts | Input Volts | Output Volts | Input Amps | Output Amps | Wiring Dia. | Hatch Item No. | Safety Listing |
|---|---|---|---|---|---|---|---|---|
| 60 | 10 | 120 | 11.5 | 0.52 | 5.2 | A | VS12-60W | UL/C-UL Recognized, Class 2 |
| | | | | | | B | VS12-60WD* | |
| | | | 23.5 | 0.52 | 2.6 | A | VS24-60W | |
| | | 230 | 11.5 | 0.26 | 5.2 | A | VE12-60W | None |
| 75 | 10 | 120 | 11.5 | 0.63 | 6.25 | A | VS12-75W | UL/C-UL Recognized |
| | | | | | | B | VS12-75WD* | |
| | | 277 | 11.5 | 0.27 | 6.25 | A | VJ12-75W | |
| | | 230 | 11.5 | 0.27 | 6.25 | A | VE12-75W | None |

*** Must use a minimum of 20 watts when using a dimmer.**

WIRING DIAGRAMS

**DIAGRAM A**

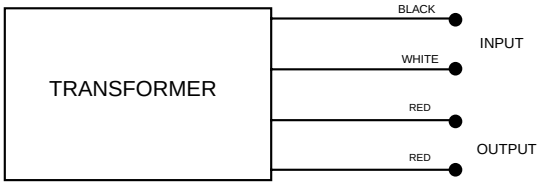


**DIAGRAM B**

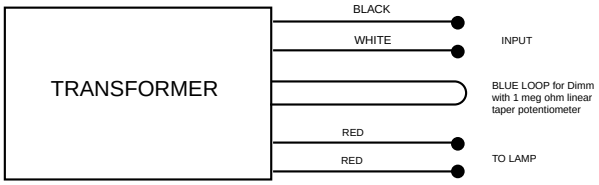


*** WD models have dimming loop for use with 1 meg ohm potentometer versus line side dimmer controls**

# 60 & 75 WATT "V" SERIES ELECTRONIC TRANSFORMER

VS

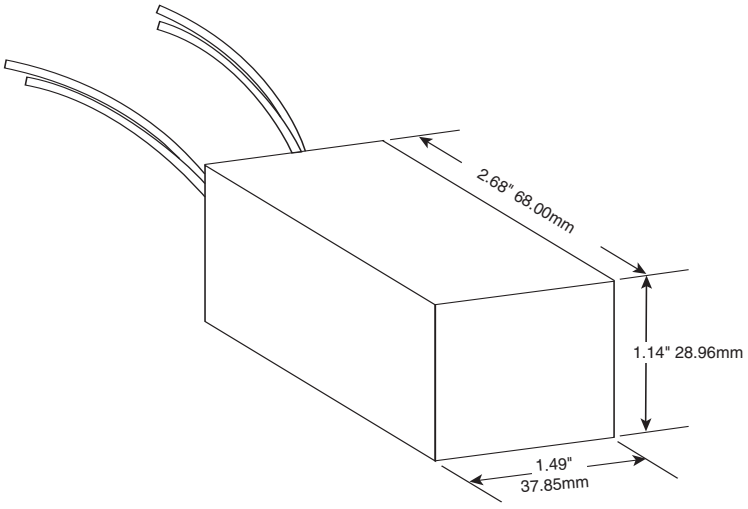


Note: VS style 60 and 75 Watt Transformers are provided with UL approved high temperature 3M double sided tape for adhering transformer to enclosure.

## Electronic Low Voltage Transformer:

- High Reliability
- Moisture and Shock Resistant
- Emits No Audible Noise
- Low Harmonic Distortion
- High Power Factor
- Lightweight, Compact Design
- Works with most commercially available dimmers. Hardwire electronic dimmers are recommended for optimum performance

## Environmental Specifications

| | |
|---|---|
| **Maximum Case Temperature** | 80˚c |
| **Sound Rating** | A+ |
| **Operating Humidity** | 95% relative humidity, non-condensating |
| **Environmental Protection** | Epoxy Sealed for moisture resistance and shock vibration resistance |

## Electrical/Mechanical Specifications

**Enclosure Material** ..... UL
.....Flame Retardant,
.....High Temperature, Engineering Resin
**Ior** .....Black
**Weight** .....4 oz.
**Power Factor** .....> 0.95
**Operating Frequency** .....25 KHz
**Total Harmonic Distortion**.....≤ 20%
**Safety Standard** ..... c UL us
.....(Class 2-up to 60 Watt only)
**Input Leads** .....6", 18AWG stranded,
..... 105 degree C stripped 3/8" tinned
**Output Leads** .....6", 18AWG stranded,
..... 105 degree C stripped 3/8" tinned

## Soft Start Circuitry

All models of Hatch low-voltage transformers utilize a soft start circuitry to maximize lamp life. The soft start circuit ramps up the lamp filament voltage slowly when the lamp is cold.

## Electronic Short-Circuit Protection

All Hatch low-voltage transformers employ our (ESP) Electronic Short Circuit and over load Protection. The ESP sensing circuit will instantly shut down the output before any of the components are stressed if a short circuit or over load is detected. The transformer will automatically reset as soon as the fault is corrected.

# VS STYLE 60 AND 75 WATT ELECTRONIC TRANSFORMERS

## HARDWIRE ELECTRONIC

| Max Watts | Min Watts | Input Volts | Output Volts | Input Amps | Output Amps | Wiring Dia. | Hatch Item No. | Safety Listing |
|---|---|---|---|---|---|---|---|---|
| 60 | 10 | 120 | 11.5 | 0.52 | 5.2 | A | VS12-60W | UL/C-UL Recognized, Class 2 |
| | | | | | | B | VS12-60WD* | |
| | | | 23.5 | 0.52 | 2.6 | A | VS24-60W | |
| | | 230 | 11.5 | 0.26 | 5.2 | A | VE12-60W | None |
| 75 | 10 | 120 | 11.5 | 0.63 | 6.25 | A | VS12-75W | UL/C-UL Recognized |
| | | | | | | B | VS12-75WD* | |
| | | 277 | 11.5 | 0.27 | 6.25 | A | VJ12-75W | |
| | | 230 | 11.5 | 0.27 | 6.25 | A | VE12-75W | None |

*** Must use a minimum of 20 watts when using a dimmer.**

## WIRING DIAGRAMS

**DIAGRAM A**

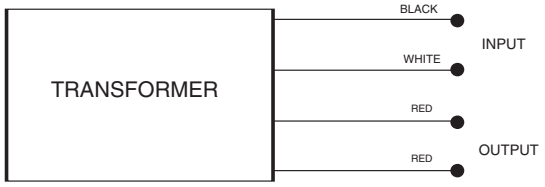


**DIAGRAM B**

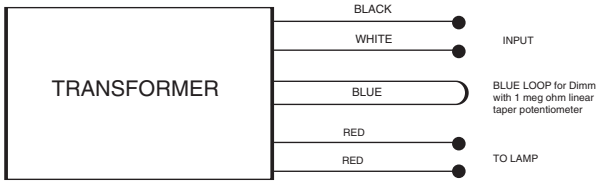


*** WD models have dimming loop for use with 1 meg ohm potentometer versus line side dimmer controls**

Standard Case Material : 304 Stainless Steel

# General Specifications

| Part Number | Voltage | | Watts | Input Amps | Output Circuits | Dimensions (In) | | | | Weight (lbs) |
|---|---|---|---|---|---|---|---|---|---|---|
| | Input | Output | | | | Height | Width | Depth | Diagram | |
| **GLT TOROID SERIES** | | | | | | | | | | |
| PREMIUM PRODUCT **GLT -300-TD** | 120V | 12, 13, 14, 15VAC | 300 | 2.50 | 1 | 19.1 | 5.4 | 5.6 | A | 22.0 |
| **GLT-600-TD** | | | 600 | 5.00 | 2 | 20.3 | 6.6 | 5.9 | B | 30.8 |
| **GLT-900-TD** | | | 900 | 7.50 | 3 | 20.3 | 6.6 | 5.9 | B | 36.3 |
| **GLT-1200-TD** | | | 1200 | 10.00 | 4 | 21.9 | 8.9 | 7.2 | C | 52.8 |
| **GLT SERIES** | | | | | | | | | | |
| **GLT-300** | 120V | 12, 13, 14, 15VAC | 300 | 2.50 | 1 | 19.1 | 5.4 | 5.6 | A | 22.0 |
| **GLT-600** | | | 600 | 5.00 | 2 | 20.3 | 6.6 | 5.9 | B | 30.8 |
| **GLT-900** | | | 900 | 7.50 | 3 | 20.3 | 6.6 | 5.9 | B | 36.3 |
| **GLT-1200** | | | 1200 | 10.00 | 4 | 21.9 | 8.9 | 7.2 | C | 52.8 |
| **GLS SERIES** | | | | | | | | | | |
| **GLS-75** | 120V | 12, 13, 14, 15VAC | 75 | 0.63 | 1 | 11.5 | 5.3 | 5.1 | D | 18.7 |
| **GLS-100** | | | 100 | 0.83 | 1 | 11.5 | 5.3 | 5.1 | D | 18.7 |
| **GLS-150** | | | 150 | 1.25 | 1 | 11.5 | 5.3 | 5.1 | D | 18.7 |
| **GLS-200** | | | 200 | 1.67 | 1 | 11.5 | 5.3 | 5.1 | D | 18.7 |
| **GLS-300** | | | 300 | 2.50 | 1 | 11.5 | 5.3 | 5.1 | D | 18.7 |
| **GLS-600** | | | 600 | 5.00 | 2 | 11.5 | 5.3 | 5.1 | D | 20.2 |
| **GLS-900** | | | 900 | 7.50 | 3 | 13.8 | 7.1 | 5.8 | E | 33.8 |
| **GLS-1200** | | | 1200 | 10.00 | 4 | 13.8 | 7.1 | 5.8 | E | 38.0 |

## Models Available With:

**Add Suffix When Ordering:**

| | | GLT Toroid | GLT | GLS |
|---|---|---|---|---|
| TD | Toroid style transformer | ● | | |
| PS | Black powder coated steel enclosure | ● | ● | ● |
| FL | Flying lead wire connections | | | ● |
| BT | Boost tap input | | | ● |
| CNT | Power contactor | ● | ● | |

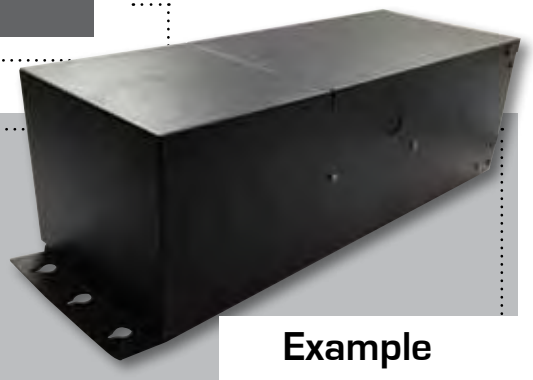

**Example Part Number:**

**GLT-300-PS**

# LS1250ENT-277

**50 VA** Auto –Transformer 8 8

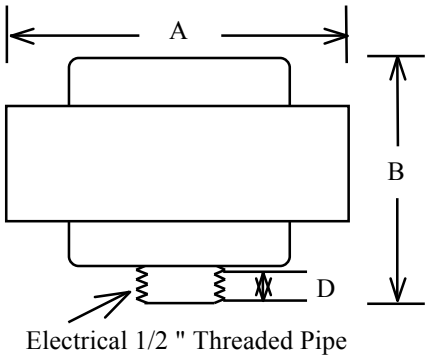


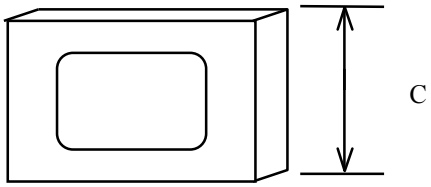


| Dimension | | | | | |
|---|---|---|---|---|---|
| **A** | **B** | **C** | **D** | **G**<br>**Mounting hole** | **H** |
| 2.625 | 3.00 | 2.187 | 0.500 | | |

Dim. in inches

**UL** recognized

**CSA** approved

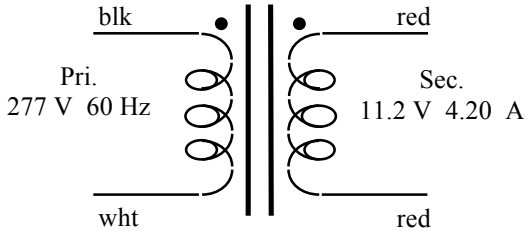

# LS1275EN-277

## LOW VOLTAGE **75 VA** TRANSFORMERS FOR **12V** HALOGEN LIGHTING

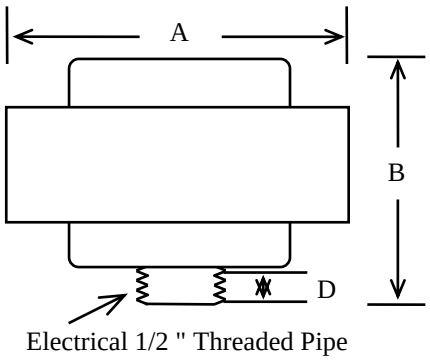


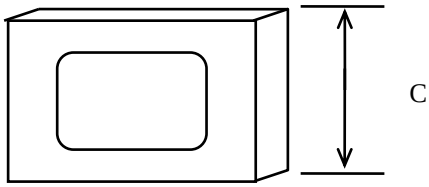


| Dimension | | | | | |
|---|---|---|---|---|---|
| **A** | **B** | **C** | **D** | **G** **Mounting hole** | **H** |
| 2.625 | 2.187 | 2.187 | 0.500 | | |

Dim. in inches

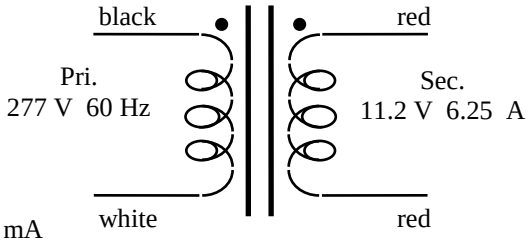


Primary Voltage :

277 Volts 60 Hertz

No Load Primary Current : < 200 mA

No Load Secondary Voltage : 13.5 Volts ± 0.25 Volts

Full Load Secondary Voltage : 11.2 Volts ± 0.20 Volts

Temperature Class : Class H ( 180º C )

Thermal Protection : none

Dielectric Strength : 1800 Volts between primary and core, primary and secondary, secondary and core

**UL** Recognized

**CSA** Approved

# 50 & 75 WATT “L” SERIES MAGNETIC TRANSFORMER

## MAGNETIC 50/75 WATT

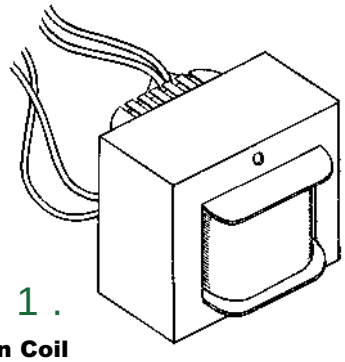

11. **Open Coil**

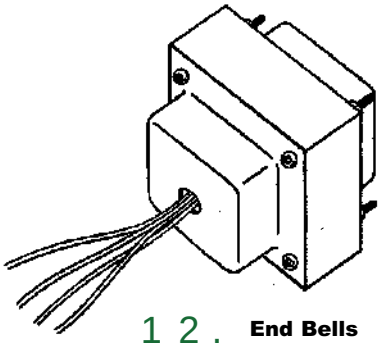

12. **End Bells**

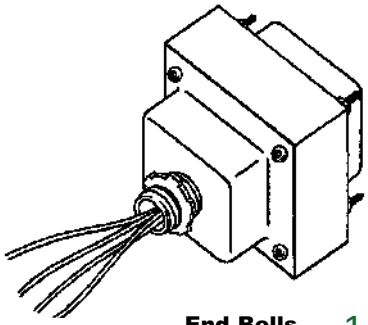

**End Bells**
**with Nipple and Jam Nut**
**(Thermal Protector optional)** 13.

## Features:

- Custom Configurations Available
- 50 or 75 Watt Versions Available
- UL Recognized
- Dimmable

## Options:

- Open Coil Style
- Mounting Brackets
- End Bells
- End Bells with Conduit Nipple
- Variations in Lead Length
- Variations in Lead Strip Length
- Variations in Wire Insulation
- Integral Thermal Protection Available

## Varnish:

Our unique process ensures the varnish will permeate through the entire unit prior to baking. The varnish protects the transformer from the environment and helps to dissipate heat, increasing the life of the unit. Our varnish system is key to holding a unit tightly together, thus eliminating noise and vibration.

## Environmental Specifications

| | |
|---|---|
| **Maximum Case Temperature** | 80˚c |
| **Sound Rating** | A+ |
| **Operating Humidity** | 95% relative humidity, non-condensating |
| **Safety Listing** | c UL us Class H 180c |

## Electrical/Mechanical Specifications

**Insulation Class**.....Class H 180°
**Core Material**.....Laminated Steel
**Varnish TempRating**.....215°C
**End Bell Material**.....Steel
**Weight**.....4 oz.
**Operating Frequency**.....60 Hz
**Safety Standard**..... c UL us
**Input Leads**.....6”,18AWG Stranded Fiberglass .....Braid over Silicone Rubber 180˚C, .....Stripped 1/2” Black, White
**Output Leads**.....6”,18AWG Stranded Fiberglass .....Braid over Silicone Rubber 180˚C, .....Stripped 1/2”

# MAGNETIC 50/75 WATT

H A R D W I R E  M A G N E T I C  T R A N S F O R M E R

| Max Watts | Input Volts | Output Volts | Input Amps | Output Amps | Open Coil | End Bells | End Bells W/Nipples | Thermal Protection | Case Style | Hatch Item No. | Safety Listing |
|---|---|---|---|---|---|---|---|---|---|---|---|
| 50 | 120 | 11.5 | 0.44 | 4.2 | Y | | | | 11 | LS12-50 | UL/C-UL Recognized, Class 2 |
| | | | | | | Y | | | 12 | LS12-50E | |
| | | | | | | | Y | | 13 | LS12-50EN | |
| | | | | | | | Y | Y | 13 | LS12-50ENT | |
| 75 | 120 | 11.5 | 0.68 | 6.25 | Y | | | | 11 | LS12-75 | UL/C-UL Recognized |
| | | | | | | Y | | | 12 | LS12-75E | |
| | | | | | | | Y | | 13 | LS12-75EN | |
| | | | | | | | Y | | 13 | LS 12-75 ENT | |

Custom Configurations Available • Dimmable

## 50 Watt

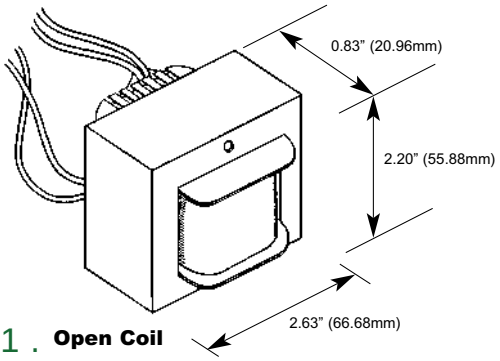


11. **Open Coil**

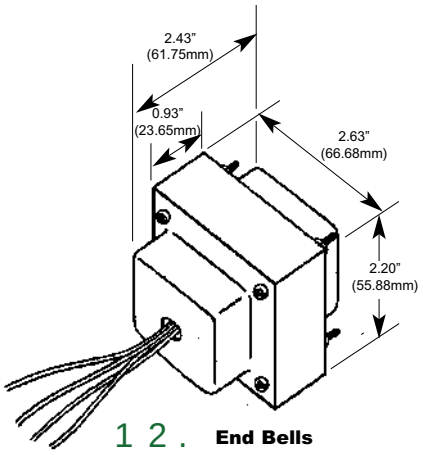


12. **End Bells**

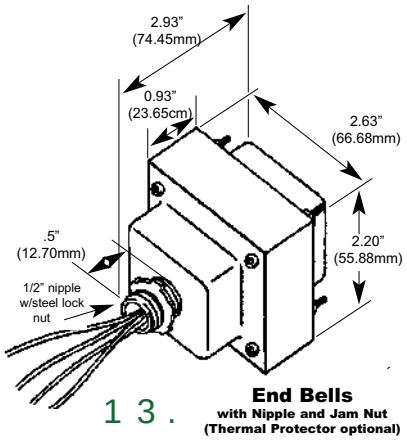


13. **End Bells**
**with Nipple and Jam Nut**
**(Thermal Protector optional)**

## 75 Watt

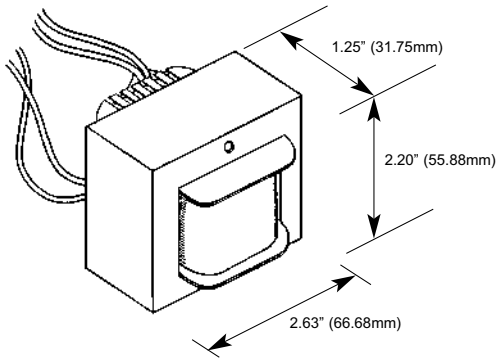


11. **Open Coil**

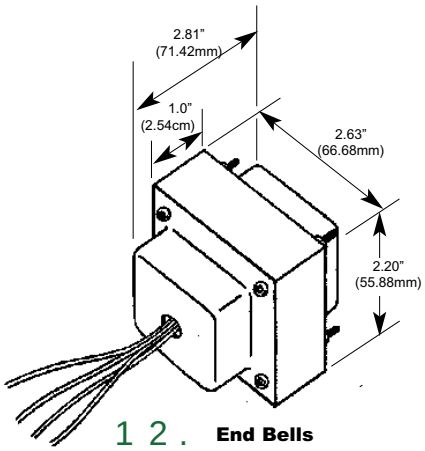


12. **End Bells**

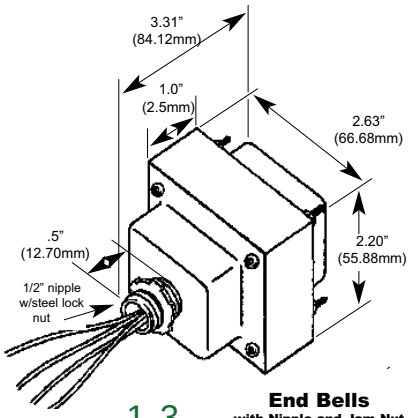


13. **End Bells**
**with Nipple and Jam Nut**
**(Thermal Protector optional)**


**855BeGreen.com**

When you are ready to Go Green
....Let us help you Be Green

**Phone: 855BeGreen (855.234.7336)**