Master Catalog

Connecting Power to Your World™

BURNDY®

Stronger Together

Connecting Power to Your World™

Continental Industries

wiley

IMPLO®

BURNDY®

Our acquisitions are made with the future in mind. With every one, we're better positioned to grow our company and serve our customers.

thermOweld®

With BURNDY's recent addition of Continental Industries' assets—and its industry-leading thermOweld® line of exothermic grounding products as well as the EZ Lite Remote® Electric Ignition System—two industry heavyweights are fusing their resources: the power of thermOweld® and BURNDY's legendary customer service.

Wiley

With BURNDY's acquisition of Wiley Electronics, we continue to lead the solar evolution as technology becomes more accessible and affordable—thanks in part our innovative product line that's anchored by the bonding technology of the WEEB washers, which allows 1.5 times faster installation than traditional grounding methods.

CMC

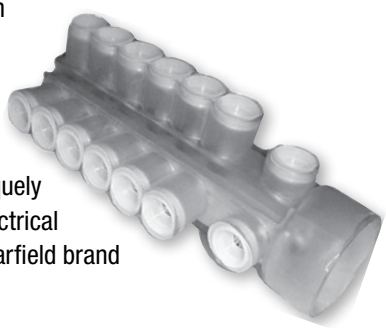

CMC/CCC and BURNDY have worked closely together for over 20 years. Now that CMC is part of BURNDY, we are uniquely positioned to provide the most comprehensive offering of electrical connector solutions. Plus, it's now easier to access CMC's Barfield brand enclosures and pole line hardware.

IMPLO®

IMPLO® delivers industry-leading service performance, time-saving installation technology and the ability to string transmission splices through travelers easily and safely.
There Is Only One IMPLO.®

Continental Industries wiley IMPLO®

BURNDY Company Facts

- BURNDY was founded in July 1924 in Brooklyn, New York, by Bern Dibner, who fostered a lifelong dedication to science and technology
- Acquired by Hubbell Incorporated in October 2009
- U.S.-based headquarters in Manchester, NH, with manufacturing sites in:
  - Lincoln, NH
  - Littleton, NH
  - Bethel, CT
  - Greenville, AL
  - Hamilton, OH
  - Broken Arrow, OK
  - Tulsa, OK
  - Manchester, TN
  - Brechin, ON, Canada
  - Toluca, Mexico
  - Sao Paulo, Brazil
- BURNDY® is The Grounding Superstore™—home to three versatile grounding systems: mechanical grounding; BURNDYWeld® and thermOweld® exothermic grounding; and HYGROUND® irreversible compression grounding
- BURNDY's engineers can provide intricate, connector customization in a fraction of the time. Our in-house advanced engineering support teams utilize today's most revolutionary technology: 3D neutral files in CAD; CAM and PDM; plus numerical simulation, rapid prototyping and state-of-the-art testing equipment

Interested in Learning More?

Call us and a BURNDY® Customer Service Professional will answer the phone and your questions—without having to press 1 or any other numbers!

We provide personal service to all our customers. Instead of installing a canned voice and menu of options, we've focused resources on giving you immediate access to a BURNDY® representative.

Based in Londonderry, New Hampshire, our Customer Service Center is staffed from 8 a.m. to 8 p.m. Eastern Time, Monday through Friday. We ship products until 7 p.m. ET and also provide emergency services 24 hours a day, seven days a week, 365 days a year.

Customer Service Department
7 Aviation Park Drive
Londonderry, NH 03053
1-800-346-4175
1-800-451-4956 (Technical Services)
1-603-647-5299 (International)

Canada
1-800-361-6975 (Quebec)
1-800-387-6487 (All other provinces)

Mexico
011-52-722-265-4400

Brazil
011-55-11-5515-7225

Tool Service Center
Littleton Industrial Park
Littleton, NH 03561
1-800-426-8720

2014 marks BURNDY's 90th year of bringing a dedication to engineering, manufacturing and offering high-quality, reliable products for the commercial and industrial as well as the electric utility markets. With that kind of market knowledge and history, there's no doubt we're here for the long haul.

TABLE OF CONTENTS

Types **KS, KS-3, SC** A-3

Type **KSU** A-4

Type **KSA** A-5

Types **KVS, KVSU** A-6

Types **KVSW, KVS-A** A-7

Type **QPX** A-8

Type **QPX-Y** A-9

Types **KPA, KPA-UP** A-10

Type **KLU** A-11

Types **KA, EA** A-12

Type **BGBL** A-13

Types **CL50-1, CL50-1TN, CL** A-14

Types **QA, QQA** A-15

Types **Q2A, Q3A** A-16

Types **QB, Q2B** A-17

Types **QDA, QR** A-18

Types **VT, E-C-G** A-19

Types **VA, VVA** A-20

Type **HFB-P1** A-21

Type **HFB-N** A-22

Types **KA-U, KKA-U** A-23

Type **KA-UAR** A-24

Type **K2A-U** A-25

Types **K3A-U, KK3A-U** A-26

Types **K4A-U, KK4A-U, K11A-U, K21A-U, K22A-U** A-27

Types **K6A-U, K8A-U, KK6A-U, KK8A-U** A-28

Type **KAU-KIT** A-29

Type **K-AG1** A-30

Type **K-G1** A-31

Type **AMS** A-32

Types **AGSKIT, UGSKIT** A-33

Type **BIBS-DB** A-34

Types **UGSKIT8, UGS350ULDB** A-35

Type **BISR-DB** A-36

Types **QGFL, FCB** A-37

Types **KPU-AC, UCU-AC** A-38

Type **BIPC** A-39

Terminal Blocks A-40

U-BLOK™ and Platforms A-41, A-42

SPEC-BLOK™ A-43 to A-46

UL Listed Distribution Blocks A-47 to A-50

Power Distribution Blocks, Splice/Reducer Blocks A-51 to A-55

Types **BIT, BITO, BISR** A-56

Type **BIBS** A-57

Type **BIBD** A-58

Types **BIBS-MT, BIBD-MT** A-59

Type **1PL** A-60

Type **BWTE** A-61

Type **BPTE** A-62

Blue highlighted items are industry standard and most frequently ordered.

LIGHTNING PROTECTION INFO.

Basic rules for selection are:

1. Must be like material to the conductor.
2. Two bolts to ground rod - minimum.
3. Cable to cable connections can be anything, one bolt, two bolt, compression, etc.
4. Cable to steel structure must have 8 square inch contact with steel.
5. Heavy duty stacks - mechanical only.
6. On all connectors with heavy duty stack rating, we must offer 1/16" thick lead plating as an option. The reason for that is closest 25 ft. to stack opening must use lead coated product.

✓ Complies with NFPA 78-86 Ordinary Structures.

✓✓ Complies with NFPA 78-86 Heavy Duty Stacks. (Order: LD for Lead Plating for Heavy Duty Stack applications.)

SPECIAL FEATURES

Other features are also available for products listed, such as undrilled or special drilling, 45° or 90° pad angles, belling for extra flexible cable, smooth or special threaded studs, special labeling or packaging, extra long braid, and nuclear certification. Please contact BURNDY Customer Service for any inquiries.

ALL OTHER SPECIAL REQUESTS PLEASE CONTACT BURNDY CUSTOMER SERVICE 1-800-346-4175

REVOLUTIONARY BURNDY® DESIGN MEETS STRICT UL486B STANDARDS

For use on all combinations

- Aluminum to aluminum
- Aluminum to copper
- Copper to copper

Patented

... and puts the bite on aluminum connections forever!

Unique "bite and grip" TRITAP™ SERVIT® contact delivers safe, long-term reliability — even without scratch brushing ... without oxide inhibiting compounds.†

† When used in NEC applications of insulated cables only.

Available in sizes from #10 through 500 kcmil

Triangular edges bite into cable to break through surface oxides:
- provide low contact resistance
- produces gas tight seal

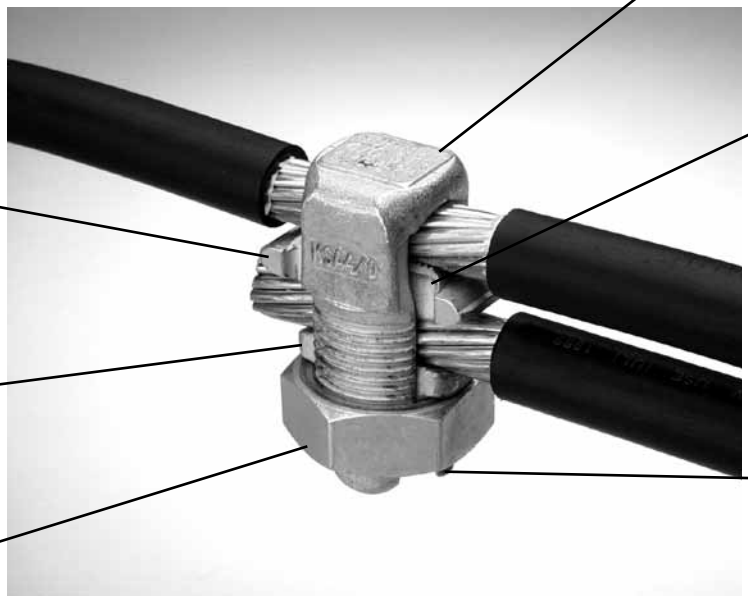

Spacer provides built-in separation to retard galvanic corrosion

Tin-plated contact surface inhibits oxide formation

Anti-galling, high efficiency threaded components result in high contact force. Easily installed using standard, everyday wrenches.

Special heat-treated hard, aluminum alloy

Blue highlighted items are industry standard and most frequently ordered.

TYPES KS & KS-3

SERVIT®

For Copper, Copperweld

Compact, high strength, high copper alloy SERVIT® split-bolt has free-running threads and easy to grip wrench flats. Highly resistant to season cracking and corrosion, the SERVIT® provides maximum pressure and assures a secure connection on all combinations of run and tap conductors. Type KS-3 accommodates 3 maximum size conductors.

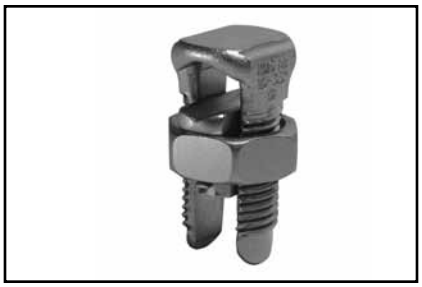

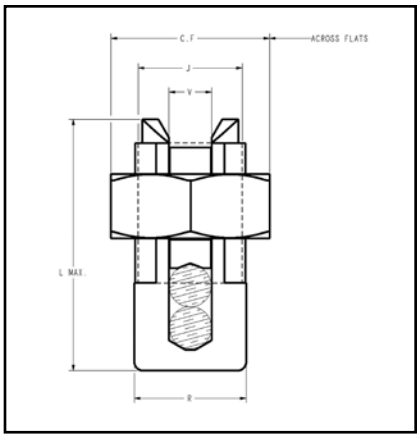

Catalog Number	Cross Flats	L	W	Conductor						▲ Recommended Tightening Torque (in-lb)
				Copper		Copperweld				
				Equal Run & Tap	Min Tap with Max Run	Maximum Run and Tap				
						Sol.	Str.	Type A	Type D	
† KS90	0.50	0.85	0.38	12 - 10 Str.	16 Str.	#10	—	—	—	80
† KS15	0.50	0.85	0.38	10 - 8 Str.	14 Str.	#8	—	—	—	80
† KS17	0.63	1.14	0.45	8 Str. - 6 Sol.	14 Str.	#6	3 #12	8A	9-1/2D	165
* KS17-3	0.62	0.98	0.70	8 Str. - 6 Sol.	16 Str.	#6	3 #12	8A	9-1/2D	165
† KS20	0.69	1.20	0.51	8 Str. - 4 Sol.	14 Str.	#4	3 #10	6A	8D	165
* KS20-3	0.68	1.17	0.78	8 Str. - 4 Sol.	14 Str.	#4	3 #10	6A	8D	165
† KS22	0.75	1.50	0.60	6 Str. - 2 Sol.	14 Str.	#2	3 #8	4A	6D	275
* KS22-3	0.74	1.33	0.84	6 Str. - 2 Sol.	14 Str.	#2	3 #8	4A	6D	275
† KS23	0.82	1.54	0.62	6 Str. - 2 Str.	14 Str.	#1	3 #7	3A	5D	275
† KS25	0.94	1.77	0.73	4 Str. - 1/0 Str.	14 Str.	2/0	3 #5	2A	4D	385
† KS26	1.05	1.94	0.82	2 Str. - 2/0 Str.	14 Str.	3/0	7 #7	—	—	385
† KS27	1.36	1.86	1.17	1 Str. - 3/0 Str.	8 Sol.	—	—	—	—	500
† KS29	1.36	2.07	1.17	1 Str. - 250	8 Str.	4/0	7 #5	—	—	650
† KS31	1.70	2.51	1.41	1/0 Str. - 350	1/0 Str.	—	19 #8	—	—	650
† KS34	1.82	2.79	1.48	2/0 Str. - 500	2/0 Str.	—	19 #6	—	—	825
KS39	2.31	3.29	1.94	4/0 Str. - 750	4/0 Str.	—	19 #5	—	—	1000
KS44	2.56	3.73	2.19	300 - 1000	4/0 Str.	—	—	—	—	1100

▲ Listed torque values are for maximum conductor combinations accommodated. Consult UL486 Tables 7-4, 7-5, 7-6 for smaller conductor combinations.
See note LIGHTNING PROTECTION INFO.
* Not UL Listed or CSA Certified.
† In addition to UL Listed for wire connectors and CSA Certified, these items are also UL rated for direct burial.

TYPE SC

SERVIT® COVER

HUG-A-BUG

Used indoors or outdoors, this compact, one-piece plastic SERVIT® cover saves time and material, eliminates costly taping of split-bolts. Positive latch snaps easily and quickly over connector, ideal for tight quarters. Self-positioning plastic fingers wrap around wires fully insulating joint. UL Listed for 600 volt indoor application with type KS. Three covers accommodate a range of 6 SERVIT® sizes through 2/0 Str.

Catalog Number	For Use With
SC4	KS17, KS17-3, KS20, KSU17, KSU20
SC2	KS22, KS20-3, KS23, KS22-3, KSA6, KSA4, KSU22, KSU23
SC2/0	KS25, KS26, KSA2, KSA1/0, KSU25, KSU26

Blue highlighted items are industry standard and most frequently ordered.

TYPE KSU

UNIVERSAL SERVIT®

For Use On All Combinations of Copper, Aluminum, ACSR, AAAC, 5005, and Steel

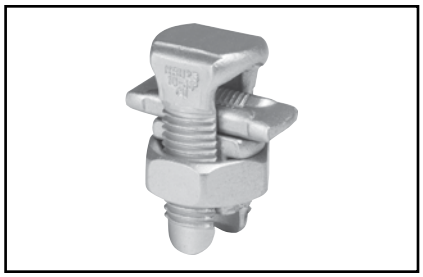

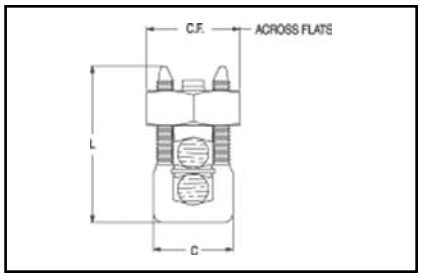

Tin-plated, high strength, copper alloy SERVIT® with spacer. Spacer separates dissimilar conductors and provides long contact length that prevents high pressure point contacts between run and tap conductors.

Copper Only

486A
Copper Only

Use of PENETROX™ joint compound recommended with Aluminum and ACSR.

Catalog Number	Cross Flats	L	W	Conductor							Recommended Tightening Torque (in-lb)
				Run		Tap		Steel (Max Conductor)			
				Copper & Aluminum	ACSR AAAC 5005	Copper & Aluminum	ACSR AAAC 5005	Sol. BWG	3 Str. BWG	Nom. Dia.	
KSU17	0.62	0.92	0.42	12 Sol. - 6 Sol.	8 (6-1)	12 Sol. - 6 Sol.	8 (6-1)	8	—	5/32	165
KSU20	0.69	1.05	0.48	10 Sol. - 4 Sol.	6 (6-1)	10 Sol. - 4 Sol.	6 (6-1)	6	8	7/32	165
KSU22	0.74	1.25	0.57	10 Sol. - 2 Sol.	6 (6-1) - 4 (7-1)	10 Sol. - 2 Sol.	6 (6-1) - 4 (7-1)	4	6	1/4	275
KSU23	0.81	1.48	0.59	8 Str. - 2 Str.	3 (6-1) - 2 (6-1)	8 Sol. - 2 Str.	6 (6-1) - 2 (6-1)	—	4	5/16	275
KSU25	0.93	1.77	0.70	2 Str. - 1/0 Str.	3 (6-1) - 1 (6-1)	10 Str. - 1/0 Str.	6 (6-1) - 1 (6-1)	—	—	3/8	385
KSU26	1.04	1.93	0.79	2 Str.-2/0 Str.	1 (6-1) - 1/0 (6-1)	8 Str. - 2/0 Str.	6 (6-1) - 1/0 (6-1)	—	—	7/16	385
KSU27	1.38	2.34	1.12	1 Str. - 3/0 Str.	1 (6-1) - 2/0 (6-1)	8 Sol. - 3/0 Str.	8 (6-1) - 2/0 (6-1)	—	—	1/2	500
KSU29	1.38	2.50	1.58	1Str. -250 kcmil	2/0 (6-1) - 4/0 (6-1)	8 Str. - 250	6 (6-1) - 4/0 (6-1)	—	—	1/2	650
KSU31	1.69	2.88	1.36	1/0 Str. - 350 kcmil	3/0 (6-1) - 4/0 (6-1)	4 Str. - 350	4 (6-1) - 4/0 (6-1)	—	—	5/8	650
KSU34	2.00	3.12	1.47	400 - 500 kcmil	336 (30-7) - 477 (18-1)	2 Str. - 500	2 (6-1) - 477 (18-1)	—	—	—	825

Accommodates compressed conductors within conductor ranges.
See note LIGHTNING PROTECTION INFO.

Blue highlighted items are industry standard and most frequently ordered.

TYPE KSA

TRITAP™ SERVIT®

For All Combinations of Aluminum to Aluminum, Aluminum to Copper and Copper to Copper, Aluminum Alloy Tin Plated

PATENTED TRIANGULAR PENETRATION TECHNOLOGY CONTACT

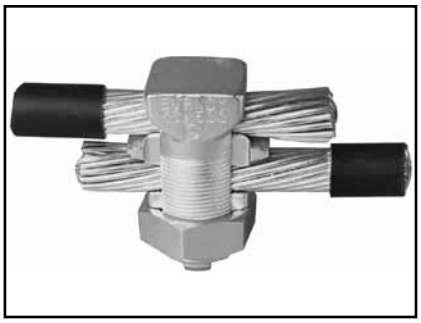

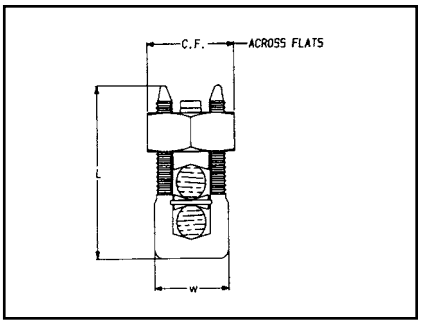

Features & Benefits

- No scratch brushing required.
- No oxide inhibitor required.
- Orients the conductor.
- Provides maximum pressure and assures a secure connection of run and tap conductors.
- Facilitates piercing the aluminum conductor surface oxides.
- UL 486B listed, 90°C rated.
- Provides a low contact resistance.
- Provides equal coefficient of expansion
- Inhibits the reformation of oxides by producing a gas-tight seal.
- Provides improved retention of minimum to maximum conductor combinations.

Catalog Number	Cross Flats	L	W	Alum. to Alum., Alum. to Copper, Copper to Copper Conductors			Recommended ▲ Tightening Torque (in-lb)
				Max Run to Max Tap	Min Run to Min Tap	Max Run to Min Tap	
KSA6	0.75	1.58	0.56	#6 Str. (0.184) - #6 Str. (0.184)	#10 Sol. (0.102) - #10 Sol. (0.102)	#6 Str. (0.184) - #10 Sol. (0.102)	165
KSA4	0.81	1.38	0.62	#4 Str. (0.232) - #4 Str. (0.232)	#8 Sol. (0.129) - #10 Sol. (0.102)	#4 Str. (0.232) - #10 Sol. (0.102)	165
KSA2	0.94	1.58	0.69	#2 Str. (0.292) - #2 Str. (0.292)	#6 Sol. (0.169) - #8 Str. (0.146)	#2 Str. (0.292) - #8 Sol. (0.146)	275
KSA1/0	1.00	1.92	0.75	#1/0 Str. (0.373) - #1/0 Str. (0.373)	#2 Str. Compact (0.268) - #8 Sol. (0.129)	#1/0 Str. (0.373) - #8 Sol. (0.129)	385
KSA2/0	1.12	1.92	0.88	#2/0 Str. (0.418) - #2/0 Str. (0.418)	#2 Str. Compact (0.268) - #8 Str. (0.146)	#2/0 Str. (0.418) - #8 Str. (0.146)	385
KSA4/0	1.49	2.54	1.13	#4/0 Str. (0.528) - #4/0 Str. (0.528)	#2 Str. Compact (0.268) - $6 Str. (0.184)	#4/0 Str. (0.528) - $6 Str. (0.184)	500
KSA350	1.69	3.24	1.50	350 kcmil (0.681) - 350 kcmil (0.681)	#1/0 Str. Compact (0.336) - #4 Str. (0.232)	350 kcmil (0.681) - #4 Str. (0.232)	650
KSA500	2.00	3.62	1.73	500 kcmil (0.813) - 500 kcmil (0.813)	400 kcmil Compact (0.659) - #2 Str. Compact (0.268)	500 kcmil (0.813) - #2 Str. Compact (0.268)	825

▲ Listed torque values are for maximum conductor combinations accommodated. Consult UL486 Tables 7-4, 7-5, 7-6 for smaller conductor combinations.
** No scratch brushing or oxide inhibiting compounds required for insulated 90° C max. rated conductor for N.E.C. applications.

Blue highlighted items are industry standard and most frequently ordered.

TYPE KVS

OKLIP™

Copper & Copperweld

Compact, two-piece, high strength, high copper alloy BURNDY® OKLIP™ recommended for heavy duty connections. Neoprene rings hold DURIUM™ bolts in place during installation. Installed with ordinary wrench.

Catalog Number	Conductor					▲ Recommended Tightening Torque (in-lb)
	Copper		Copperweld Max Run & Tap			
	Run	Tap	Sol.	Str.	Type V	
KVS26	2 Str. - 2/0 Str.	6 Str. - 2/0 Str.	3/0	7 #8	—	180
KVS28	1/0 Str. - 4/0 Str.	10 Str. - 4/0 Str.	4/0	7 #6	V3/0	250
KVS31	250 - 350 kcmil	10 Str. - 350 kcmil	—	19 #8	V250	325
KVS34	400 - 500 kcmil	10 Str. - 500 kcmil	—	19 #6	V350	375
KVS40	400- 800 kcmil	3/0 Str. - 800 kcmil	—	19 #5	—	500
KVS44	500 - 1000 kcmil	3/0 Str. - 1000 kcmil	—	—	—	500

▲ Listed torque values are for maximum conductor combinations accommodated. Consult UL486 Tables 7-4, 7-5, 7-6 for smaller conductor combinations.
∿ See note LIGHTNING PROTECTION INFO.

TYPE KVSU

UNIVERSAL OKLIP™

Mechanical Connector All Combinations of Copper, Aluminum, ACSR, AAAC & 5005

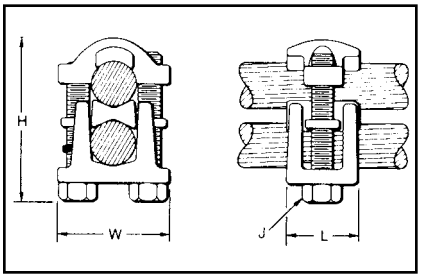

Compact, high strength, tin plated copper alloy two-piece connector with spacer and tin-plated silicon bronze DURIUM™ hardware. Recommended for heavy duty connections. Spacer separates dissimilar conductors and provides long contact length. Neoprene ring prevents loss of shorter bolt during installation. Longer peened bolt permits swivel action for easier installation. Use of PENETROX™ joint compound recommended with aluminum and ACSR.

Catalog Number	Conductor								H	J	L	W	Rec. Tightening Torque (in-lb)
	Run		Tap		Run		Tap						
	Copper & Alum	ACSR, AAAC, & 5005	Copper & Alum	ACSR, AAAC, & 5005	Copper Sol., Copperweld Sol.	Steel Nom. Dia.	Copper Sol., Copper-weld Sol.	Steel Nom. Dia.					
KVSU26	2 Str. - 2/0 Str.	3 - 2/0	6 Str. - 2/0 Str.	6 - 2/0	1 - 3/0	5/16 - 7/16	#6 - 3/0	3/16 - 7/16	2	5/16	1	1-1/2	180
KVSU28	1/0 Str. - 4/0 Str.	1/0 - 4/0	6 Str. - 4/0 Str.	6 - 4/0	2/0 - 4/0	3/8 - 1/2	#6 - 4/0	5/32 - 1/2	2-3/8	3/8	1-1/8	1-3/4	250
KVSU31	250 - 350 kcmil	4/0 - 300	#6 - 350	6 - 300	-	9/16 - 5/8	#6 - 4/0	3/16 - 5/8	2-5/8	1/2	1-3/8	2-1/8	325
KVSU34	400 - 500 kcmil	336.4 - 397.5	#4 - 500	5 - 397.5	-	3/4 - 3/4	#4 - 4/0	7/32 - 3/4	3	1/2	1-1/2	2-1/4	375
KVSU40	400 - 800 kcmil	4/0 - 800	4/0 - 800	3/0 - 715.5	-	3/4 - 1	-	1/2 - 1	3-1/2	1/2	1-5/8	2-1/2	500
KVSU44	500 - 1000 kcmil	4/0 - 1000	4/0 - 1000 kcmil	4/0 - 900	-	7/8 - 1 1/8	-	1/2 - 1 1/8	4	3/8	2	3	500

Accomodates compressed conductors within diameter range. ∿ See note LIGHTNING PROTECTION INFO.

Blue highlighted items are industry standard and most frequently ordered.

TYPE KVSW

OKLIP™

Mechanical Connector
For Copper and Copperweld

Similiar to OKLIP™ Type KVS except for a high copper alloy spacer that separates run and tap conductors. Provides high contact pressure, confines conductor strands, and assures vibration-proof connection. Longer peened bolt, permits swivel action for easier installation. Silicon bronze DURIUM™ hardware.

Catalog Number	Conductor		Recommended Tightening Torque (in-lb)
	Run	Tap	
KVSW26	2 Str. - 2/0 Str.	6 Sol. - 2/0 Str.	180
KVSW28	1/0 Str. - 4/0 Str.	6 Sol. - 4/0 Str.	250
KVSW31	250 - 350 kcmil	4 Sol. - 350 kcmil	325
KVSW34	400 - 500 kcmil	4 Str. - 500 kcmil	375
KVSW40	400 - 800 kcmil	AWG 4/0 - 800 kcmil	500
KVSW44	500 - 1000 kcmil	250 - 1000 kcmil	500

∿ See note LIGHTNING PROTECTION INFO.

TYPE KVS-A

ALUMINUM OKLIP™

For Use On All Combinations of Copper, Aluminum†, ACSR†, AAAC and 5005

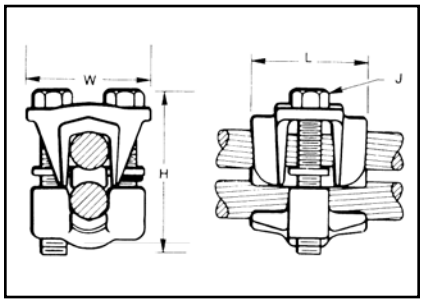

Three-piece, high-conductivity, non-copper bearing aluminum alloy connector with thick spacer and aluminum hardware. Hardware in KVS26A and KVS28A is stainless steel. Recommended for heavy duty dissimilar metal applications. Spacer separates conductors and provides long contact length. Belled entrances prevent chafing, permit easier assembly of conductors. Longer peened bolt permits swivel action for easier installation. Neoprene ring prevents loss of shorter bolt. PENETROX™ joint compound recommended with aluminum and ACSR.

THESE CONNECTORS CAN ACCOMMODATE ACSR CONDUCTORS OVER ARMOR ROD WITHIN THE DIAMETER RANGE INDICATED.

APPLICATION OVER ARMOR ROD

Catalog Number	Conductor				Rec. Tightening Torque (in-lb)	Conductor Range by Diameter			H	J	L	W
	Run		Tap			Min. Run Dia.	Min. Tap Dia.	Max. Run & Tap Dia.				
	Copper, & Alum.†	ACSR†, AAAC, & 5005	Copper, & Alum.†	ACSR†, AAAC & 5005								
KVS26A	2 Str. - 2/ 0 Str.	#4 - 2/0	10 Str. - 2/0 Str.	#6 - 2/0	180	0.28	0.12	0.45	2-1/4	5/16	1-1/4	1-5/8
KVS28A	1/0 Str. - 4/0 Str.	1/0 - 4/0	10 Str. - 4/0 Str.	#6 - 4/0	240	0.36	0.12	0.56	3	3/8	1-5/8	2-1/16
KVS31A	250 - 350	4/0 - 336.4	6 Str. - 350 kcmil	#6 - 336.4 kcmil	300	0.57	0.18	0.68	3-1/16	1/2	1-15/16	2-7/16
KVS34A	400 - 500	336.4 - 397.5	4 Str. - 500 kcmil	#5 -397.5 kcmil	300	0.73	0.22	0.81	3-9/16	1/2	2-5/16	2-5/8
KVS40A	400 - 800	336.4 - 715.5 kcmil	3/0 Str. - 800 kcmil	#3/0 - 715.5	300	0.73	0.47	1.04	4-1/16	1/2	2-7/16	2-7/8
KVS44A	500 - 1000	397.5 - 900 kcmil	3/0 Str. - 1000 kcmil	#3/0 - 900 kcmil	480	0.80	0.47	1.16	4-7/8	5/8	2-1/2	3-1/8

† Accommodates compressed conductors within diameter range. ∿ See note LIGHTNING PROTECTION INFO.

Blue highlighted items are industry standard and most frequently ordered.

TYPE QPX

VERSITAP™

Parallel Clamp For Copper, Copperweld, Copperweld-Copper

The VERSITAP™ Type QPX is recommended for Tee, Cross, Parallel, Butt and Tap connections. Range-taking, only 10 connectors required to accommodate conductor sizes from #6 Str. to 1000 kcmil. Edges are rounded for easy taping. Made of high strength, high-conductivity copper alloy and silicon bronze DURIUM™ hardware.

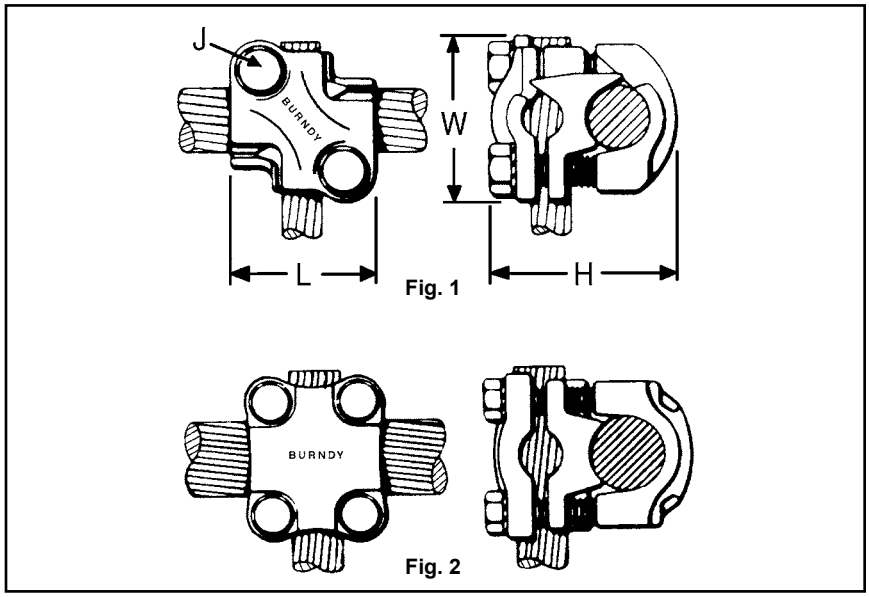

* For various configurations, see page TYPE QPX-Y

Catalog Number	Copper Conductor		Fig. No.	Dimensions				Rec. Tightening Torque in-lb ▲	Conductor			
									Run		Tap	
	Run	Tap		H	J	L	W		Copperweld	Copperweld - Copper	Copperweld	Copperweld - Copper
QPX2C2C	6 Str. - 2 Str.	6 Str. - 2 Str.	1	1-1/2	5/16	1-5/16	1-3/8	150	5 Sol. - 3 #7	8A - 4A	5 Sol. - 3 #7	8A - 4A
QPX282C	1 Str. - 4/0 Str.	6 Str. - 2 Str.		2-1/16			1-9/16	250	7 #9 - 7 #5	3A - 3/0V		
QPX2828	1 Str. - 4/0 Str.	1 Str. - 4/0 Str.		2-3/8	3/8	1-13/16	1-13/16				7 #9 - 7 #5	3A - 3/0V
QPX342C	250 - 500 kcmil	6 Str. - 2 Str.			5/16	1-3/8	1-7/8	375	19 #19 - 19 #6	4/0 EK	5 Sol. - 3 #7	8A - 4A
QPX3428	250 - 500 kcmil	1 Str. - 4/0 Str.		2-3/4	3/8	1-3/4	2-1/16				7 #9 - 7 #5	3A - 3/0 V
QPX3434	250 - 500 kcmil	250 - 500 kcmil	2	3		2-1/16	2-3/16				19 #19 - 19 #6	4/0 EK
QPX442C	500 - 1000 kcmil	6 Str. - 2 Str.	1	2-11/16	5/16	1-3/8	2-1/4	500	19 #6	—	5 Sol. - 3 #7	8A - 4A
QPX4428	500 - 1000 kcmil	1 Str. - 4/0 Str.		2-7/8	3/8	1-13/16	2-7/16				7 #9 - 7 #5	3A - 3/0V
QPX4434	500 - 1000 kcmil	250 - 500 kcmil	2	3-1/16		2-1/16					19 #19 - 19 #6	4/0 EK
QPX4444	500 - 1000 kcmil	500 - 1000 kcmil		3-7/16		2-5/8	2-9/16				19 #6	—

▲ Listed torque values are for maximum conductor combinations accommodated. Consult UL486 Tables 7-4, 7-5, 7-6 for smaller conductor combinations.

⚡ See note LIGHTNING PROTECTION INFO.

Blue highlighted items are industry standard and most frequently ordered.

TYPE QPX-Y

UNIVERSAL VERSITAP™

Universal Parallel Clamp For Copper and Aluminum

High copper alloy cast connector, tin-plated for use with copper or aluminum cable. Makes parallel, tap, tee, cross or end-to-end connections. Edges rounded for easy taping. PENETROX™ joint compound recommended.

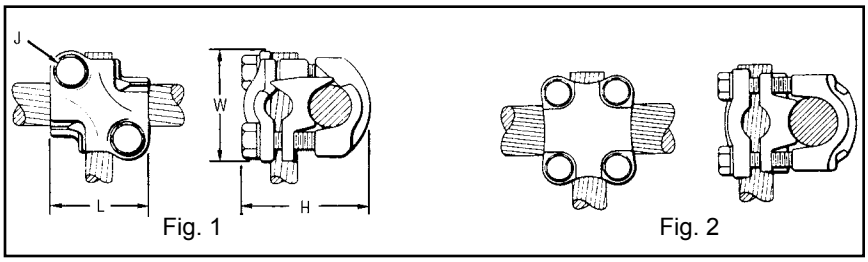

Catalog Number	Run	Tap	Fig. No.	H	J	L	W	Recommended Tightening Torque in-lb ▲
QPX2C2C-Y	6 Str.-2 Str.	6 Str.-2 Str.	1	1-5/8	5/16	1-1/2	1-5/8	150
QPX282C-Y	1 Str. - 4/0 Str.	6 Str.-2 Str.	1	1-7/8	5/16	1-1/2	1-7/8	150
QPX2828-Y	1 Str. - 4/0 Str.	1 Str. - 4/0 Str.	1	2	3/8	2	2-1/8	250
QPX342C-Y	250 - 500 kcmil	6 Str.-2 Str.	1	2-1/4	5/16	1-1/2	2-1/8	375
QPX3428-Y	250 - 500 kcmil	1 Str. - 4/0 Str.	1	2-1/2	3/8	2	2-1/2	375
QPX3434-Y	250 - 500 kcmil	200 - 500 kcmil	2	2-7/8	3/8	2-1/2	2-5/8	375
QPX4444-Y	750 - 1000 kcmil	750 - 1000 kcmil	2	3-7/8	1/2	3-1/2	3-1/2	500

▲ Listed torque values are for maximum conductor combinations accommodated. Consult UL486 Tables 7-4, 7-5 7-6 for smaller conductor combinations.

⚡ See note LIGHTNING PROTECTION INFO.

APPLICATION VARIATIONS

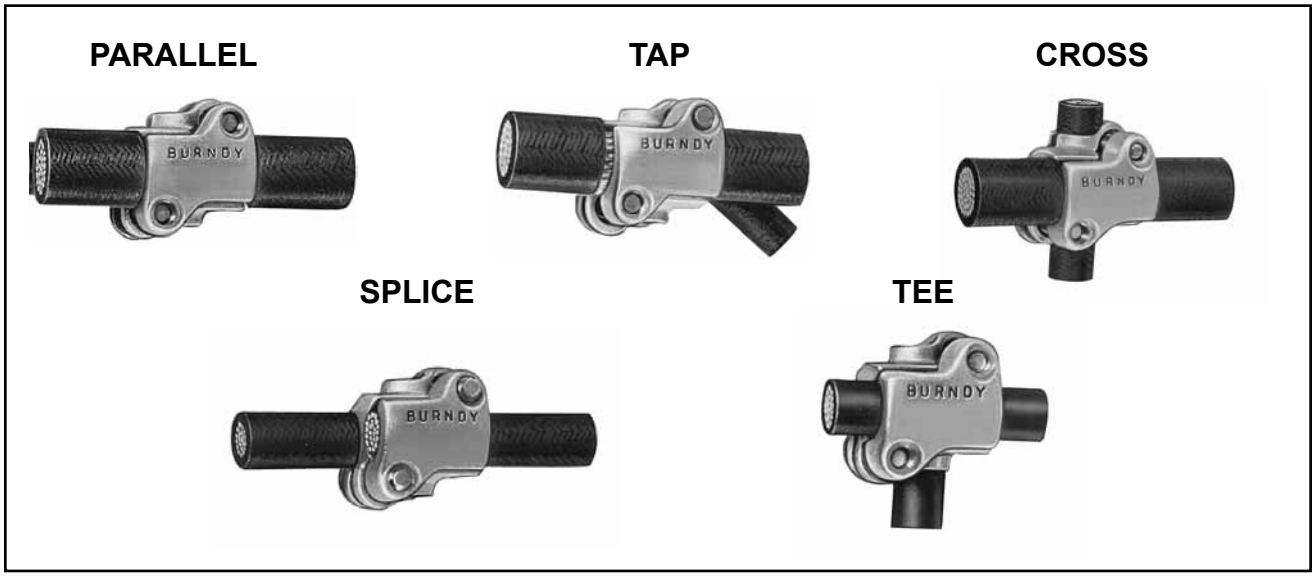

Blue highlighted items are industry standard and most frequently ordered.

TYPE KPA

SCRULUG™

For Copper Cable

High copper alloy tin-plated terminal for joining a wide range of cable to equipment pads or terminal blocks. Especially good in light industrial applications. The tongue and body are a one-piece design. The pressure bar equalizes pressure over the conductor and prevents the screw from cutting into the cable.

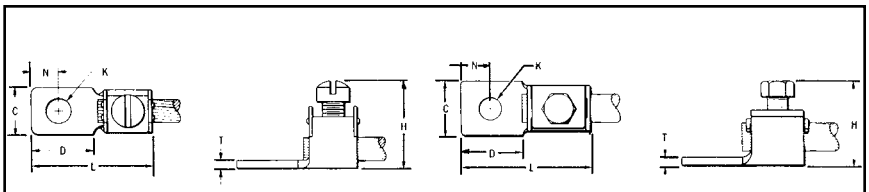

Fig. 1 Fig. 2

Catalog Number	Wire Range	Fig. No.	C	D	H	K	Stud Hole Size	L	N	T	Recommended Tightening Torque (in-lb)
KPA8C	14 Sol. - 8 Str.	1	0.38	0.47	0.72	0.21	#10	0.97	0.22	0.06	25
KPA4C	14 Sol. - 4 Str.	1	0.50	0.59	0.94	0.27	1/4	1.22	0.30	0.06	35
KPA25	4 Str. - 1/0 Str.	2	0.75	0.81	1.25	0.33	5/16	1.82	0.41	0.10	180
KPA28	1/0 Str. - 4/0 Str.	2	0.97	1.12	1.66	0.39	3/8	2.40	0.53	0.13	250
KPA34	4/0 Str. - 500 kcmil	2	1.38	1.38	2.44	0.54	1/2	3.32	0.75	0.20	375

NOTE: For unplated version add "UNPL" suffix.

TYPE KPA-UP

SCRULUG™

For Copper Cable

High copper alloy terminal for joining a wide range of cable to equipment pads or terminal blocks. Plain copper finish.

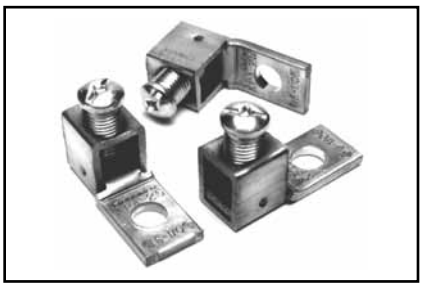

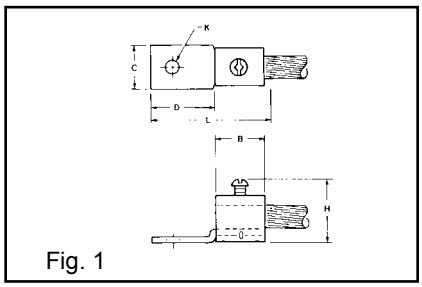

Fig. 1

Features & Benefits

- One piece design.
  - ◊ Superior torque and pull out performance.
- Convenient range taking design.
  - ◊ Reduces catalog numbers. One catalog number accommodates several conductor sizes.
- High conductivity copper alloy.
  - ◊ Long lasting, reliable contact.
- Compact design.
  - ◊ Easy to use.
- Slot Robertson screw, hex head, hex socket bolt.
  - ◊ No special installation tools required. Eliminates over-torquing/potential conductor damage.

Catalog Number	Wire Range	Fig. No.	C	D	H	K	Stud Hole Size	L	N	T	Hardware	Recommended Tightening Torque (in-lb)
KPA8CUP	14 Sol. - 6 Str.	1	0.38	0.56	0.81	0.20	#10	1.04	0.22	0.07	# 12-24 SLOT	35
KPA4CUP	14 Sol. - 4 Str.		0.50	0.71	1.00	0.28	1/4	1.28	0.33		5/16 DIA.SLOT ROBERTSON	45

NOTE: For tin plating drop "-UP" suffix and add "-TP" suffix (example: KPA4CTP).

For use in grounding applications with a green screw, contact factory. Listed for grounding per UL467.

Blue highlighted items are industry standard and most frequently ordered.

TYPE KLU

SCRULUG™

FOR COPPER CABLE -
OFFSET TONGUE - NON-PLATED

High copper alloy terminal with offset tongue for joining a wide range of cable to equipment pads or bar. Easy to install with screwdriver or wrench. Connector is reusable. Plain copper finish.

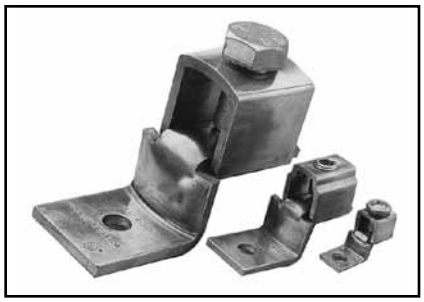

Features & Benefits

- Convenient range-taking design.
  - ◊ Reduces catalog numbers.
    One conductor accommodates several conductor sizes.
- High conductivity copper alloy
  - ◊ Long lasting reliable contact.
- Compact design
  - ◊ Easy to use. Reduces labor time.
- Slot Robertson screw, hex head/hex socket bolt
  - ◊ No special installation tools required. eliminates over-torquing/potential conductor damage.

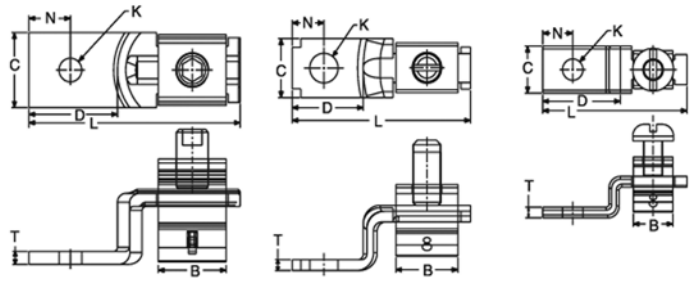

Fig. 1 Fig. 2 Fig. 3

① Catalog Number	Conductor	Fig. No.	B (MM/IN)	C (MM/IN)	K (MM/IN)	L (MM/IN)	N (MM/IN)	T (MM/IN)	Rec. Tightening Torque (in-lb)	Hardware	Stud Hole Size	Strip Length (in)
KLU25 KLU25TP	14 Sol. .064 Dia.to 10 Sol. .102 Dia. CU	3	7.00 0.28	8.00 0.31	4.00 0.14	26.0 1.02	5.00 0.21	2.00 0.07	20	No. 8-32 Slotted Round Machine Screw	#6	7/16
KLU35 KLU35TP	14 Sol. .0641 Dia.to 6 Str. .184 Dia. CU	2	11.0 0.43	10.0 0.39	5.00 0.20	31.0 1.24	6.00 0.22	2.00 0.07	35	1/4 UNF Slotted Set Screw	#10	5/8
KLU70 KLU70TP	8 Sol. .129 Dia. to 2 Str. .292 Dia. CU	2	13.0 0.50	12.0 0.47	7.00 0.26	39.0 1.55	6.00 0.25	2.00 0.08	40	5/16 UNF Slotted Set Screw	1/4	3/4
KLU125 KLU125TP	2 Str. .292 Dia. to 1/0 Str. .372 Dia. CU	2	15.0 0.61	16.0 0.62	7.00 0.26	50.0 1.98	11.0 0.42	3.00 0.11	50	3/8 UNF Slotted Set Screw	1/4	15/16
KLU175 KLU175TP	4 Str. .232 Dia. to 3/0 Str. .470 Dia. CU	1	18.0 0.72	19.0 0.75	10.0 0.39	56.0 2.20	11.0 0.43	4.00 0.16	250	3/8 UNF Socket/Hex Screw	3/8	1
KLU225 KLU225TP	2 Str. .292 Dia. to 4/0 Str. .528 Dia. CU	1	24.0 0.94	25.0 0.99	9.00 0.34	65.0 2.55	13.0 0.51	3.00 0.12	250	7/16 UNF Socket/Hex Screw	5/16	1-5/16
KLU300 KLU300TP	1/0 Str. .372 Dia. to 350 kcmil .681 Dia. CU	1	31.0 1.22	25.0 0.99	10.0 0.39	72.0 2.83	13.0 0.52	3.00 0.12	325	5/8 UNF Socket/Hex Screw	3/8	1-5/8
KLU400 KLU400TP	1/0 Str. .372 Dia. to 500 kcmil .813 Dia. CU	1	36.0 1.42	38.0 1.50	10.0 0.39	104.0 4.09	23.0 0.91	5.00 0.18	375	5/8 UNF Socket/Hex Screw	3/8	1-5/32

NOTES:

① Suffix "-TP" on catalog number denotes tin plate (example: KLU400TP).

2 Material: Copper alloy.

Blue highlighted items are industry standard and most frequently ordered.

TYPE KA

KA-LUG™

For Copper Cable

Compact, economical, high copper alloy terminal for joining a wide range of cable to equipment pads or terminal blocks.

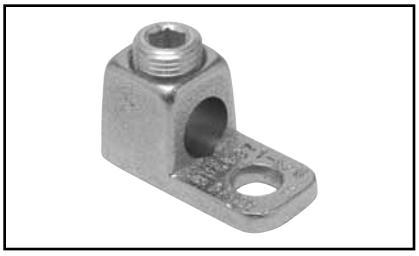

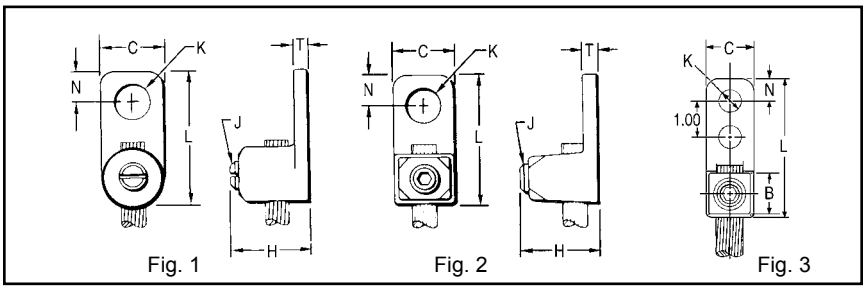

Catalog Number	Conductor	Fig. No.	C	H	J	K	Stud Hole Size	L	N	T	Recommended Tightening Torque (in-lb)
KA8C	# 14 Sol. (0.064 Dia.) - 8 Str. (0.416 Dia.)	1	3/8	5/8	#12	7/32	#10	13/16	3/16	3/32	25
KA4C	# 14 Sol. (0.064 Dia.) - 4 Str. (0.232 Dia.)	1	9/16	3/4	5/16″	9/32	1/4	1-1/8	1/4	7/64	45
KA25	# 4 Str. (0.232 Dia.) - 1/0 Str. (0.373 Dia.)	2	3/4	15/16	1/2″	27/64	3/8	1-11/16	3/8	1/8	200
KA25-2TC38	# 4 Str. (0.232 Dia.) - 1/0 Str. (0.373 Dia.)	3	3/4	15/16	1/2″	27/64	3/8	2-13/16	3/8	1/8	200
KA28	# 1 Str. (0.332 Dia.) - 4/0 Str. (0.528 Dia.)	2	15/16	1-1/4	5/8″	27/64	3/8	1-15/16	7/16	3/16	275
KA34	4/0 Str. (0.528 Dia.) - 500 kcmil (0.814 Dia.)	2	1-3/8	2-3/32	13 /16″	9/16	1/2	2-9/16	9/16	9/32	375

▲ Listed torque values are for maximum conductor sizes accommodated. Consult UL486 Tables 7-4, 7-5, 7-6 for smaller conductor sizes.

TYPE EA

VERSILUG™

For Copper Cable

Compact, high copper alloy terminal for joining a wide range of cable to equipment pads or bar. Clamping element adjustable to several angles. One-wrench installation.

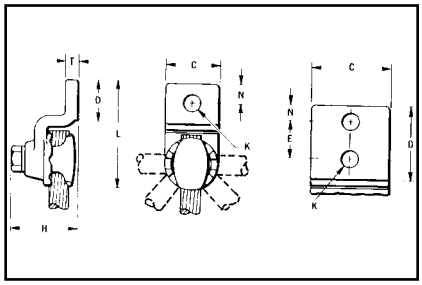

Catalog Number	Wire Range	No. of holes in pad	C	D	E	H	K	Stud Hole Size	L	N	T	Rec. Tightening Torque (in-lb)
EA2C	8 AWG-2 AWG	1	13/16	1-1/16	—	1-3/8	7/16	3/8	2-1/2	13/32	1/4	150
EA25	2 AWG-1/0	1	7/8	1-1/8	—	1-7/16	7/16	3/8	2-11/16	7/16	1/4	180
EA28	1/0 -4/0 AWG	1	1-1/16	1-3/8	—	1-3/4	7/16	3/8	3-3/16	17/32	5/16	250
EA28-2N	1/0 -4/0 AWG	2	1-1/16	3-5/8	1-3/4	1-3/4	9/16	1/2	5-1/8	5/8	5/16	250
EA34	250 kcmil-500 kcmil	1	1-3/8	1-5/8	—	2-1/4	9/16	1/2	4	13/16	3/8	375
EA34-2N	250 kcmil-500 kcmil	2	1-3/8	3-5/8	1-3/4	2-1/4	9/16	1/2	5-5/8	5/8	3/8	375

* "N" indicates NEMA standard stud holes. Consult UL486 Tables 7-4, 7-5, 7-6 for smaller conductor sizes.

▲ Listed torque values are for maximum conductor sizes accommodated.

Blue highlighted items are industry standard and most frequently ordered.

TYPE BGBL

LAY-IN QIKLUG™

UL LISTED 90° C, 600 V

The Lay-In QIKLUG™, Type BGBL is manufactured from high strength 6061-T6 aluminum, and is ideally suited for grounding and bonding applications accommodating both copper and aluminum conductor sizes #14 AWG to 250 kcmil. The BGBL4SS with Stainless Steel screw is UL 467 Listed for grounding and bonding.

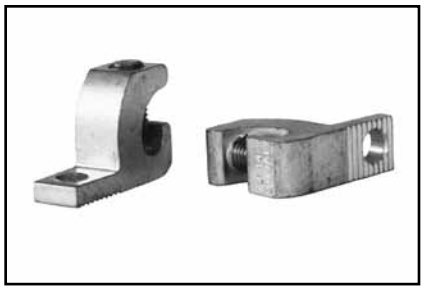

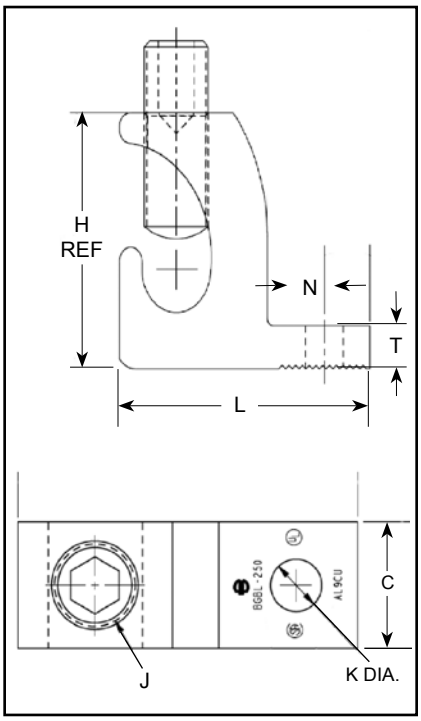

Features & Benefits

- UL 486B listed, AL9CU rated
  - ◊ For copper and aluminum conductor combinations up to 90° C, 600 Volt applications.
- UL Recognized for grounding and bonding
  - ◊ Ensures reliability.
- Electro-tin plated
  - ◊ Provides low contact resistance.
- Lay-in feature
  - ◊ Eases installation.

Catalog Number	Conductor Range	C	H	J	K	L	N	T	Hex Size
BGBL-4	14 - 4	0.38 [10]	0.78 [20]	1/4 - 28	0.22 [6]	1.07 [27]	0.19 [5]	0.15 [4]	Slot
BGBL4SS*	14 - 4	0.38 [10]	0.78 [20]	1/4 - 28	0.22 [6]	1.07 [27]	0.19 [5]	0.15 [4]	Slot
BGBL-1/0	14 - 1/0	0.60 [15]	1.17 [30]	3/8 - 24	0.27 [7]	1.50 [38]	0.30 [8]	0.22 [6]	Slot
BGBL-250	6 - 250 kcmil	0.80 [20]	1.79 [45]	9/16 - 18	0.33 [8]	2.20 [56]	0.40 [10]	0.30 [8]	5/16

* Suitable for copper conductors only.

TYPE CL50-1 & CL50-1TN

COPPER LAY-IN QIKLUG™

For Copper

The Lay-In QIKLUG™ is manufactured from high strength pure electrolytic copper to ensure maximum strength and conductivity. UL467 Listed for direct burial in earth or concrete. The open-faced design allows for fast lay-in of the conductor without the need for cutting or breaking. Stainless steel screws used for excellent corrosion resistance.

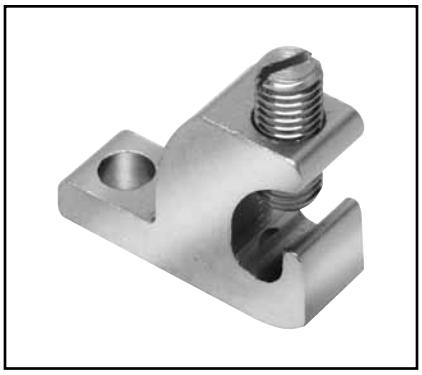

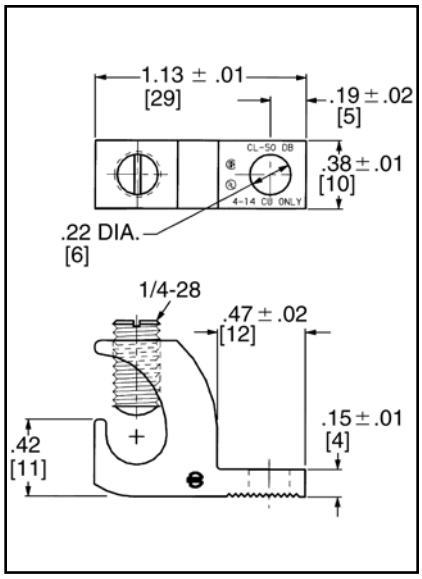

Catalog Number	Conductor Range	Stud Hole
CL50-1	14 AWG-4 AWG	#10
CL50-1TN	14 AWG-4 AWG	#10

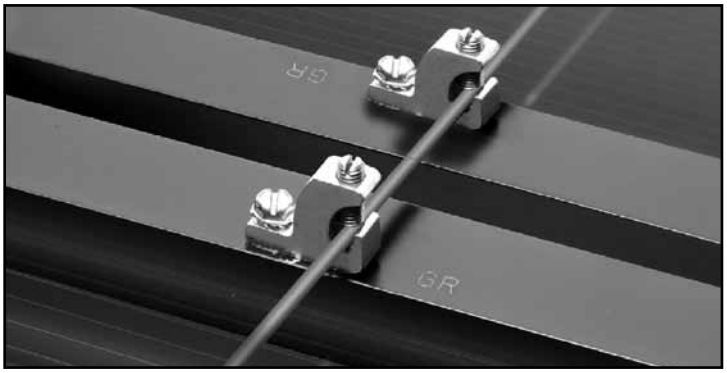

Photo above shows a typical solar panel installation using CL50-1 connectors.

TYPE CL

COPPER LAY-IN QIKLUG™

For Copper

Manufactured for maximum strength and conductivity, these lay-in lugs allow for continuous runs of conductor and are well suited as terminations as well. Tin-plated, set screw style connectors, three sizes cover a range from #14AWG to 250 kcmil. CL3/0-516TN and CL250-516TN are UL Listed and CSA certified. CL1/0-14TN UL Listed for grounding and CSA certified. 90° C rated. Suitable for copper conductors only.

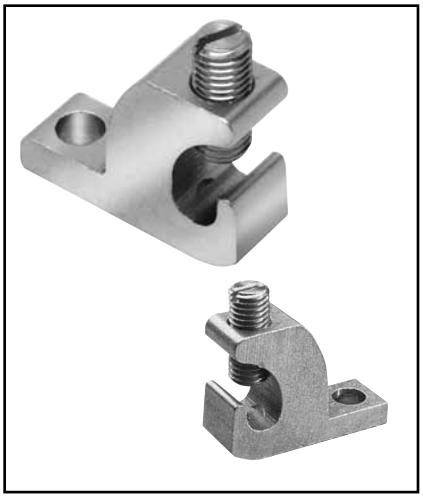

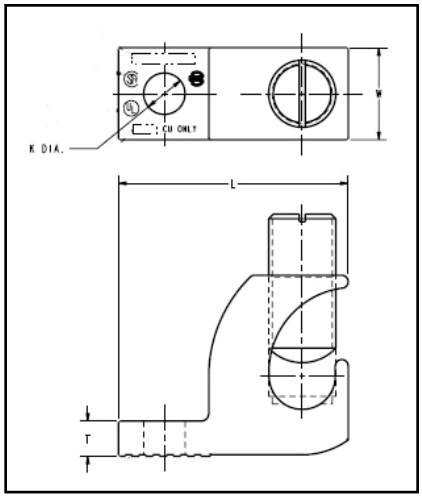

Catalog Number	Wire Range Copper	H	W	L	T	K Dia	Hex Size
CL1/0-14TN	#14 - 1/0 AWG	1.17	0.60	1.50	0.22	0.27	7/16-20 (Slotted)
CL3/0-516TN	#6 - 3/0 AWG	1.56	0.80	2.00	0.30	0.33	9/16-18 (0.25 Hex)
CL250-516TN	#6 AWG - 250 kcmil	1.79	0.80	2.20	0.30	0.33	9/16-18 (0.25 Hex)

Blue highlighted items are industry standard and most frequently ordered.

TYPES QA, QQA

QIKLUG™

Copper Cable

Type QA heavy duty, compact, high copper alloy terminal for joining a wide range of cable to equipment pads or bar. Fast one-wrench installation. Type QQA heavy duty, high copper alloy terminal for joining cable to equipment pads or bar. Twin clamping elements secure joint vibration and flexing. One-wrench installation.

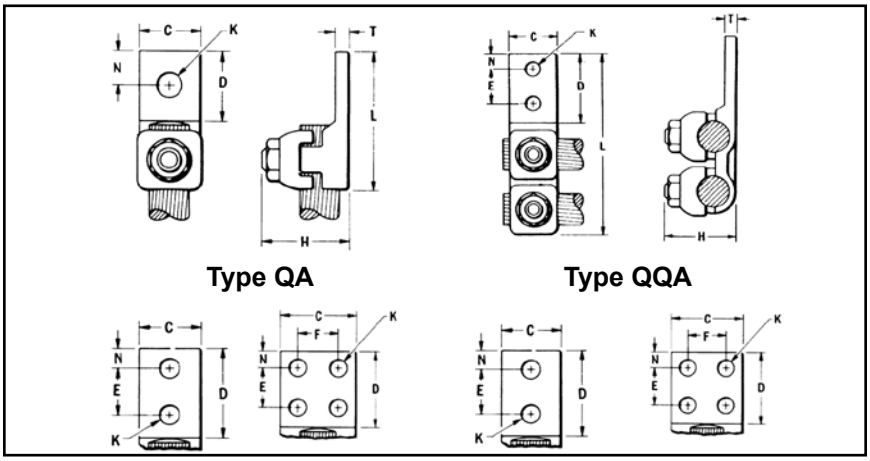

Catalog Number*		Conductor		Holes in Pad	C	D	E & F	H	K	Stud Hole Size	L	LL	N	T	Torque (in-lb)
Type QA	Type QQA	Commercial	Navy												
QA8C-B	QQA8C	14 Sol. - 8 Str.	4-14	1	9/16	9/16	—	11/16	7/32	#10	1-3/8	2-5/16	9/32	5/32	75
QA8C-2B	QQA8C-2	14 Sol. - 8 Str.	4-14	2	9/16	1-1/14	5/8	11/16	7/32	#10	2	3	5/16	5/32	75
QA4C-B	QQA4C	8 Str. - 4 Str.	23-40	1	5/8	5/8	—	3/4	9/32	1/4	1-7/16	2-3/8	5/16	3/16	110
QA4C-2B	QQA4C-2	8 Str. - 4 Str.	23-40	2	5/8	1-3/16	5/8	3/4	9/32	1/4	2	2-15/16	5/16	3/16	110
QA1C-B	QQA1C	4 Str. - 1 Str.	50-75	1	5/8	3/4	—	1	9/32	1/4	1-3/4	2-13/16	11/32	7/32	150
QA1C-2B	QQA1C-2	4 Str. - 1 Str.	50-75	2	5/8	1-9/16	7/8	1	11/32	5/16	2-9/16	3-5/8	11/32	7/32	150
QA26-B	QQA26	1/0 Str. - 2/0 Str.	100-125	1	13/16	1	—	1-3/16	13/32	3/8	2	3-3/16	7/16	7/32	180
QA26-2B	QQA26-2	1/0 Str. - 2/0 Str.	100-125	2	13/16	1-15/16	1	1-3/16	13/32	3/8	3	4-3/16	7/16	7/32	180
QA28-B	QQA28	3/0 Str. - 4/0 Str.	150-200	1	1	1-1/16	—	1-5/16	13/32	3/8	2-1/4	3-9/16	17/32	1/4	250
QA28-2B	—	3/0 Str. - 4/0 Str.	—	2	1	2	1	1-9/29	13/32	3/8	3-1/5	—	7/16	1/4	250
QA28-2N*	QQA28-2N*	3/0 Str. - 4/0 Str.	150-200	2	1	3-1/8	1-3/4	1-5/16	9/16	1/2	4-5/16	5-5/8	5/8	1/4	250
QA31-B	QQA31	250 - 350 kcmil	250-350	1	1-3/16	1-3/8	—	1-11/16	17/32	1/2	2-11/36	4-1/8	11/16	5/16	325
QA31-2B	—	250 - 350 kcmil	250-350	2	1-3/16	1-31/32	1	1-11/16	7/16	3/8	3-3/8	—	7/16	5/16	325
QA31-2N	QQA31-2N*	250 - 350 kcmil	250-350	2	1-3/16	3	1-3/4	1-11/16	9/16	1/2	4-7/16	5-7/8	5/8	5/16	325
QA34-B	—	400 - 500 kcmil	400-500	1	1-3/8	1-5/8	—	2	17/32	1/2	3-3/16	4-7/8	13/16	5/16	375
QA34-2B	—	400 - 500 kcmil	400-500	2	1-3/8	2	1	2	13/32	3/8	3-9/16	—	7/16	5/16	375
QA34-4B	QQA34	400 - 500 kcmil	400-500	4	1-7/8	1-15/16	1	2	7/16	3/8	3-1/2	—	7/16	5/16	375
QA34-2N*	QQA34-2N*	400 - 500 kcmil	400-500	2	1-3/8	3-3/32	1-3/4	2	9/16	1/2	4-11/16	6-9/32	5/8	5/16	375
QA40-B	—	600 - 800 kcmi	650-800	1	1-5/8	1-7/8	—	2-7/16	11/16	5/8	3-11/16	—	27/32	3/8	500
QA40-2N*	QQA40-2N*	600 - 800 kcmi	650-800	2	1-5/8	3	1-3/4	2-7/16	9/16	1/2	4-14/16	7-3/32	5/8	3/8	500
QQA40-4N*	—	600 - 800 kcmi	650-800	4	3	3	1-3/4	2-7/16	9/16	1/2	—	7-3/32	5/8	3/8	500
QA44-B	—	850 - 1000 kcmil	1000	1	1-7/8	2	—	2-3/4	11/16	5/8	3-15/16	—	1	1/2	500
QA44-2N*	QQA44-2N*	850 - 1000 kcmil	1000	2	1-7/8	3	1-3/4	2-3/4	9/16	1/2	5	7-1/8	5/8	1/2	500
QA44-4N*	QQA44-4N*	850 - 1000 kcmil	1000	4	3	3-1/16	1-3/4	2-3/4	9/16	1/2	5	7-1/8	5/8	1/2	500
QA46-2N*	—	1100 - 1500 kcmil	1300	2	2-1/8	3	1-3/4	3-1/8	9/16	1/2	5-1/4	—	5/8	9/16	600
QA46-B	—	1100 - 1500 kcmil	1300	1	2-1/8	2-1/8	—	3-1/8	13/16	3/4	4-3/8	—	1-1/16	9/16	600

* "N" indicates NEMA standard stud holes.

All 4N items see note LIGHTNING PROTECTION INFO.

Blue highlighted items are industry standard and most frequently ordered.

TYPE Q2A

QIKLUG™

For Copper Cable

Compact, high copper alloy terminal for joining two cables to equipment pads or bars. Each element accommodates a wide range of cable. One-wrench installation.

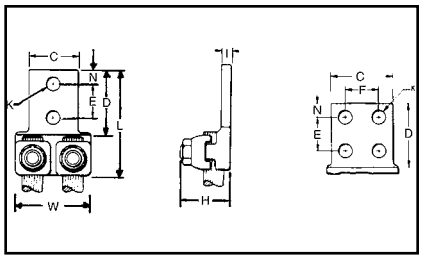

Catalog Number*	Conductor	No. of Holes in Pad	C	D	E & F	H	K	Stud Hole Size	L	N	T	W	Recommended Tightening Torque in-lb
Q2A1C-2	4 Str. - 1 Str.	2	1-1/2	1-7/8	1	1-1/16	7/16	3/8	2-7/8	7/16	7/32	1-13/16	150
Q2A26-2N	1/0 Str. - 2/0 Str.		1-5/8	3-1/8	3/4	1-3/16	9/16	1/2	4-3/16	5/8		1-15/16	180
Q2A28-2N	3/0 Str. - 4/0 Str.		1-7/8		1-3/4	1-3/8			4-3/8		1/4		250
Q2A28-4N		4	3						4-1/2			2-1/8	
Q2A31-2N	250 - 350 kcmil	2	2-3/8			1-11/16					5/16		325
Q2A31-4N		4	3									3	
Q2A34-2N	400 - 500 kcmil	2	2-1/2			2			4-11/16		3/8		375
Q2A34-4N		4	3									3-3/4	
Q2A40-2N	600 - 800 kcmil	2				2-7/16			5		7/16		500
Q2A40-4N		4										4-11/32	
Q2A44-4N	850 - 1000 kcmil		3-1/4			2-3/4			5-1/4		1/2		
Q2A46-4N	1100 - 1500 kcmil		3-1/2	3-1/4		3-1/8			5-1/2		11/16	5	600

* "N" indicates NEMA standard stud holes. ⚡ All 4N items see note LIGHTNING PROTECTION INFO.

TYPE Q3A

QIKLUG™

For Copper Cable

Compact, high copper alloy terminal for joining three cables to equipment pads or bar. Each element accommodates a wide range of cable. One-wrench installation.

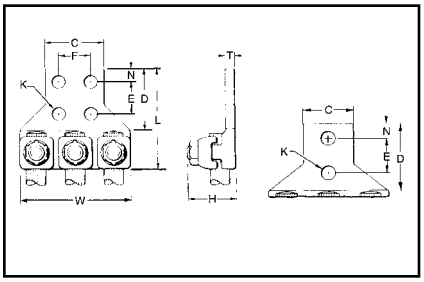

Catalog Number*	Conductor	No. of Holes in Pad	C	D	E & F	H	K	Stud Hole Size	L	N	T	W	Recommended Tightening Torque in lb
Q3A28-2N	3/0 Str. - 4/0 Str.	2	1-7/8	3-1/8	1-3/4	1-3/8	9/16	1/2	4-5/16	5/8	1/4	3-3/16	250
Q3A28-4N	3/0 - 4/0 Str.	4	3						4-3/8				
Q3A31-2N	250 - 350 kcmil	2	2-3/8			1-11/16			4-7/16		5/16	4-1/16	325
Q3A31-4N		4	3										
Q3A34-2N	400 - 500 kcmil	2	2-1/2			1-15/16			4-3/4		3/8	4-9/16	375
Q3A34-4N		4	3										
Q3A40-4N	600 - 800 kcmil					2-7/16			5		7/16	5-13/16	500
Q3A44-4N	850 - 1000 kcmil		3-1/4			2-3/4			5-1/4		1/2	6-5/8	
Q3A46-4N	1100 - 1500 kcmil		3-1/2	3-1/4		3-1/8			5-1/2		11/16	7-7/8	600

* "N" indicates NEMA standard stud holes.

Blue highlighted items are industry standard and most frequently ordered.

TYPE QB

QIKLUG™

For Copper Cable

Compact, high copper alloy side entrance terminal for joining a range of cable at right angles to terminal blocks. One-wrench installation.

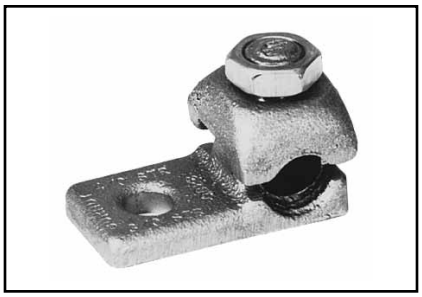

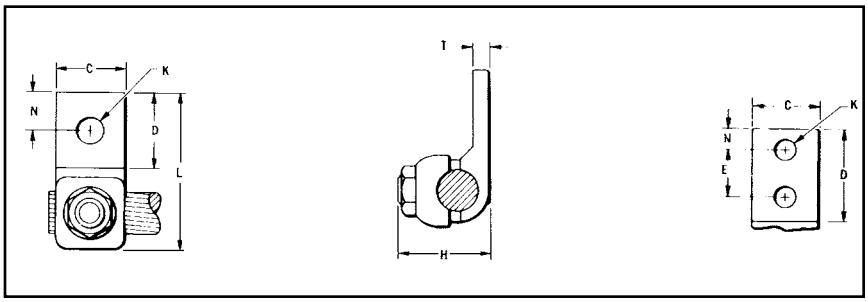

Catalog Number*	Conductor	No. of Holes in Pad	C	D	E	H	K	Stud Hole Size	L	N	T	Recommended Tightening Torque in-lb
QB8C	14 Sol. - 8 Str.	1	9/16	9/16	—	7/8	7/32	#10	1-1/8	9/32	5/32	75
QB4C	8 Str. - 4 Str.	1	11/16	27/32	—	13/16	9/32	1/4	1-3/8	11/32	1/4	110
QB1C	4 Str. - 1 Str.	1	11/16	13/16	—	1	9/32	1/4	1-1/2	11/32	7/32	150
QB26	1/0 Str. - 2/0 Str.	1	13/16	1	—	1-1/32	13/32	3/8	1-13/16	7/16	7/32	180
QB28	3/0 Str. - 4/0 Str.	1	1	1-1/16	—	1-5/16	13/32	3/8	2-1/16	17/32	1/4	250
QB31-2N	250 - 350 kcmil	2	13/16	3-1/4	1-3/4	1-11/16	9/16	1/2	4-1/2	5/8	5/16	325

* "N" indicates NEMA standard stud holes.

TYPE Q2B

QIKLUG™

For Copper Cable

Compact, high copper alloy terminal for joining two cables at right angles to a single terminal block. Each element accommodates a range of cable. One-wrench installation.

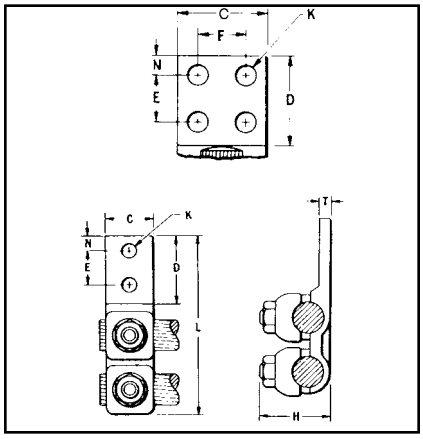

Catalog Number*	Conductor	No. of Holes in Pad	C	D	E & F	H	K	Stud Hole Size	L	N	T	Recommended Tightening Torque in-lb
Q2B28-2N	3/0 Str. - 4/0 Str.	2	1-7/8	3-1/8	1-3/4	1-3/8	9/16	1/2	5-3/16	5/8	1/4	250
Q2B31-2N	250 - 350 kcmil	2	2-3/8	3-3/16	1-11/16	1-3/8	9/16	9/16	5-7/8	5/8	5/16	325
Q2B40-4N	600 - 800 kcmil	4	3	3-1/16	1-3/8	2-5/16	9/16	3/4	6-11/16	5/8	7/16	500

* "N" indicates NEMA standard stud holes. ⚡ All 4N items see note LIGHTNING PROTECTION INFO.

Blue highlighted items are industry standard and most frequently ordered.

TYPE QDA

QIKLUG™

For Copper Cable

Compact, high copper alloy terminal for joining a wide range of cable to equipment studs. Provides low contact resistance when gripped between two contact nuts. One wrench installation.

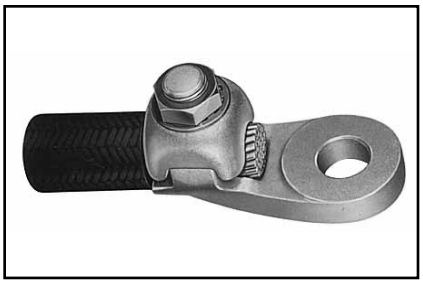

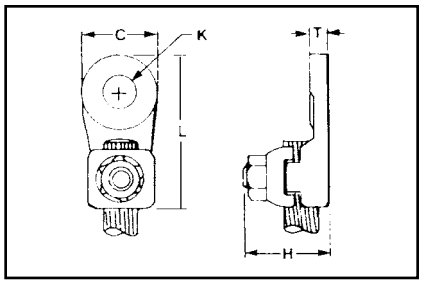

Catalog Number	Conductor		C	H	K	Stud Hole Size	L	T	Recommended Tightening Torque in-lb
	Commercial	Navy							
QDA8C	14 Sol. - 8 Str.	3 - 14	1	11/16	7/16	3/8	1-7/8	3/16	75
QDA4C	8 Str. - 4 Str.	23 - 40	1	3/4	7/16	3/8	1-7/8	7/32	110
QDA1C	4 Str. - 1 Str.	50 - 75	1	1	7/16	3/8	2-3/16	9/32	150
QDA26	1/0 Str. - 2/0 Str.	100 - 125	1-1/4	1-3/16	9/16	1/2	2-1/2	5/16	180
QDA28	3/0 Str. - 4/0 Str.	150 - 200	1-1/4	1-5/16	9/16	1/2	2-5/8	5/16	250
QDA31	250 - 350 kcmil	250 - 350	1-1/2	1-11/16	11/16	5/8	3	5/16	325
QDA34	400 - 500 kcmil	400 - 500	1-7/8	2	13/16	3/4	3-5/8	5/16	375
QDA40	600 - 800 kcmil	650 - 800	2-1/8	2-5/16	1-1/16	1	4-3/16	3/8	500

TYPE QR

QIKLINK™ SPLICE OR REDUCER

For Copper Cable to Cable

High copper alloy splicer/reducer for joining a range of cable end to end. Neat, compact easy to tape installation. One-wrench installation.

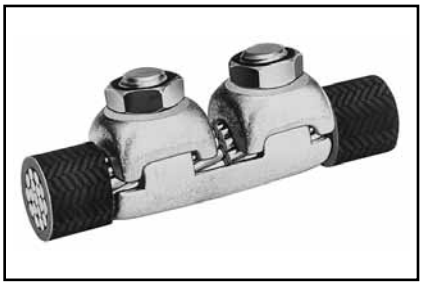

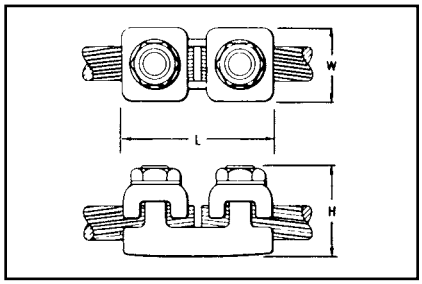

Catalog Number	Conductor Either Side	H	L	W	Recommended Tightening Torque in-lb
QR4C	6 Sol. - 4 Str.	3/4	1-11/16	5/8	110
QR1C	4 Str. - 1 Str.	1-1/16	1-15/16	11/16	150
QR26	1/0 Str. - 2/0 Str.	1-3/16	2-1/8	13/16	180
QR28	3/0 Str. - 4/0 Str.	1-3/8	2-3/8	1	250
QR31	250 - 350 kcmil	1-11/16	2-5/8	1-1/4	325
QR34	400 - 500 kcmil	1-15/16	3-1/16	1-7/16	375
QR40	600 - 800 kcmil	2-7/16	3-5/8	1-7/8	500

See note LIGHTNING PROTECTION INFO.

Blue highlighted items are industry standard and most frequently ordered.

TYPE VT

VARITAP™ T-CONNECTOR

For Copper Cable to Cable

High copper alloy T-connector for cable run, cable tap. V-bolt clamping elements accommodate large range of cable and are particularly suited for extra flexible cable. One-wrench installation.

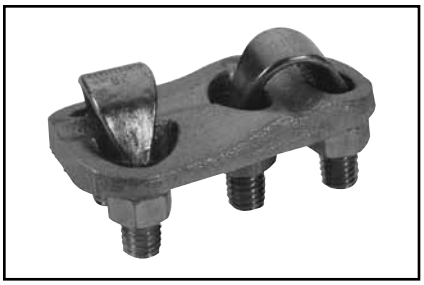

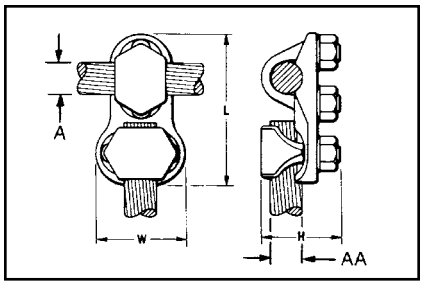

Catalog Number	Conductor		H	L	W	Recommended Tightening Torque	
	Run (A)	Tap (AA)				Run	Tap
VT2C2C	8 AWG-2 AWG	8 AWG-2 AWG	1-5/16	2-5/16	1-5/16	275	275
VT2525	6 AWG-1/0	6 AWG-1/0	1-5/8	2-5/8	1-7/16	385	385
VT2825	1/0 -4/0 AWG	6 AWG-1/0	1-5/8	3-1/8	1-1/4	250	385
VT2828	1/0 -4/0 AWG	1/0 -4/0 AWG	1-5/8	3-1/16	1-11/16	250	250
VT3025	1/0 -300 kcmil	6 AWG-1/0	1-7/8	3-3/8	1-3/8	325	385
VT3030	1/0 -300 kcmil	1/0 -300 kcmil	1-7/8	3-5/16	1-15/16	325	325
VT3425	300 kcmil-500 kcmil	6 AWG-1/0	3-11/32	3-11/16	1-1/2	375	385
VT3428	300 kcmil-500 kcmil	1/0 -4/0 AWG	3-11/32	3-1/2	1-11/16	375	250
VT3430	300 kcmil-500 kcmil	1/0 -300 kcmil	3-11/32	3-5/8	1-15/16	375	325
VT3434	300 kcmil-500 kcmil	300 kcmil-500 kcmil	3-11/32	3-3/4	2-1/4	375	375
VT4040	500 kcmil-800 kcmil	500 kcmil-800 kcmil	2-9/16	4-1/2	2-5/8	500	500
VT4425	750 kcmil-1000 kcmil	6 AWG-1/0	2-7/8	4-5/16	1-3/16	500	385
VT4428	750 kcmil-1000 kcmil	1/0 -4/0 AWG	2-7/8	4-1/8	1-11/16	500	250
VT4834	1500 kcmil-2000 kcmil	300 kcmil-500 kcmil	4-1/4	5-1/4	2-1/4	600	375

See note LIGHTNING PROTECTION INFO.

TYPE E-C-G

TRANSFORMER TAP ADAPTER

For Copper

Multi-tap, range-taking cast copper alloy connector designed to take 2, 3 or 4 conductors from a single secondary transformer outlet.

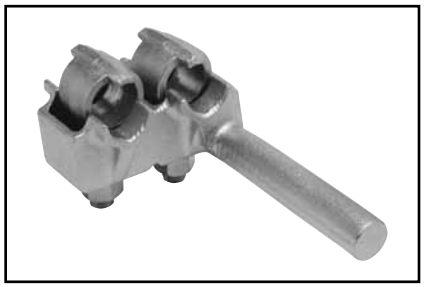

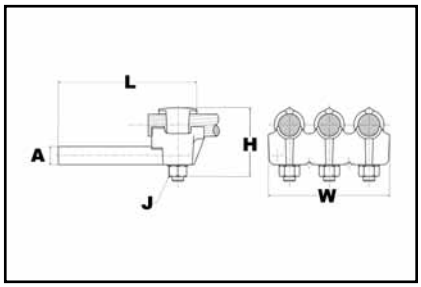

Catalog Number	Number of Conductors	Conductor Size	A dia	H	J	L	W	Recommended Tightening Torque
E2C34G1	2	1/0 Sol. - 500 kcmil	0.78	2-7/8	1/2"-13	6-1/4	3-1/2	480
E3C34G1	3						5-1/4	
E4C34G1	4						6-7/8	

Blue highlighted items are industry standard and most frequently ordered.

TYPES VA, VVA

VARILUG™

For Copper Cable

High copper alloy terminal for joining a wide range of cable to equipment pads or bar. Particularly suitable for use on extra flexible cable. One-wrench installation. Type VVA, twin elements secure joint against vibration and flexing. Particularly recommended for use on extra flexible cables. One-wrench installation.

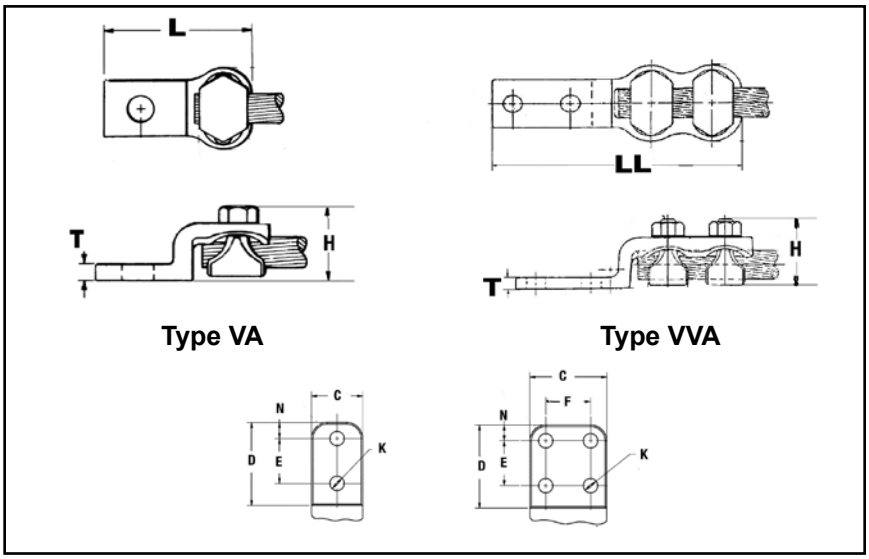

Catalog Number*		Conductor	No. of Holes in Pad	C	D	E&F	H	K	Stud Hole Size	L	LL	N	T	Rec. Tightening Torque
Type VA	Type VVA													
VA2C	**VVA2C**	8 AWG-2 AWG	1	13/16	1-1/4	—	1-1/2	7/16	3/8	2-3/4	4-1/16	13/32	1/4	275
VA25	**VVA25**	6 AWG-1/0	1	7/8	1-5/16	—	1-7/8	7/16	3/8	2-7/8	4-5/16	7/16	1/4	385
VA28	**VVA28**	1/0 -4/0 AWG	1	1-1/16	1-1/2	—	2-1/4	7/16	3/8	2-7/8	4-1/8	17/32	5/16	250
VA28-2N	**VVA28-2N**	1/0 -4/0 AWG	2	1-1/16	3-1/2	1-3/4	2-1/4	9/16	1/2	4-15/16	6-1/5	5/8	5/16	250
VA30	**VVA30**	1/0 -300 kcmil	1	1-1/8	1-5/8	—	2-3/16	7/16	3/8	3-1/4	4-5/8	5/8	5/16	325
VA30-2N	**VVA30-2N**	1/0 -300 kcmil	2	1-1/8	3-9/16	1-3/4	2-3/16	9/16	1/2	5-3/16	6-9/16	5/8	5/16	325
VA34	**VVA34**	300 kcmil-500 kcmil	1	1-3/8	2	—	3-11/32	9/16	1/2	3-13/16	5-5/16	13/16	3/8	375
VA34-2N	**VVA34-2N**	300 kcmil-500 kcmil	2	1-3/8	3-5/8	1-3/4	3-11/32	9/16	1/2	5-3/8	6-7/8	5/8	3/8	375
VA34-4N	**VVA34-4N**	300 kcmil-500 kcmil	4	3	3-5/8	1-3/4	3-11/32	9/16	1/2	5-3/8	6-7/8	5/8	3/8	375
VA40	**VVA40**	500 kcmil-800 kcmil	1	1-5/8	2-5/16	—	2-7/8	11/16	5/8	4-1/2	6-3/8	15/16	3/8	500
VA40-2N	**VVA40-2N**	500 kcmil-800 kcmil	2	1-5/8	3-5/8	1-3/4	2-7/8	9/16	1/2	5-13/16	7-11/16	5/8	3/8	500
VA40-4N	**VVA40-4N**	500 kcmil-800 kcmil	4	3	2-5/8	1-3/4	2-7/8	9/16	1/2	5-13/16	7-11/16	5/8	3/8	500

* "N" indicates NEMA standard stud holes.

All 4N items see note LIGHTNING PROTECTION INFO.

Blue highlighted items are industry standard and most frequently ordered.

TYPE HFB-P1

BAR CLAMP ASSEMBLY COMPONENTS

For Copper Bar

To build your own high strength clamp assembly for multiple flat bar using type HFB-P1 bar clamps and clamping hardware, the following tables have been provided. The clamp assembly eliminates the need for drilling the flat bar and is used in indoor and outdoor applications.

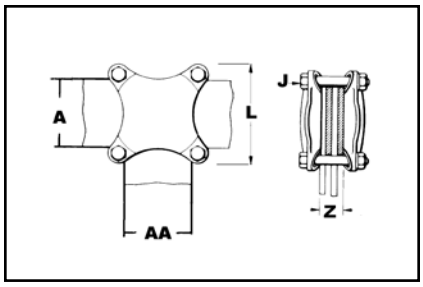

One Clamp Half							
Bar Clamp Bar			"J" Bolt Dia.	L	W	Z	Recommended Tightening Torque in-lb
Catalog Number	Run 'A'	Tap 'AA'					
HFB22P1	2	2	3/8	4.38	4.38	*	240
HFB33P1	3	3	3/8	4.38	4.38	*	240
HFB42P1	4	2	3/8	5.75	5.75	*	240
HFB44P1	4	4	1/2	5.75	5.75	*	480
HFB63P1	6	3	1/2	7.75	4.75	*	480
HFB66P1	6	6	5/8	8.12	8.12	*	660
HFB88P1	8	8	3/4	10.50	10.50	*	1990

*Z=Space between the bar clamp contact surfaces

Bar Clamp Assembly Components †									
Copper Bus Bar Width (in)		Bar Clamp		Silicon Bronze Clamping Hardware					
				Bolts		Nuts		Split Lock Washers	
Run-A	Tap-AA	Qty	Cat. No.	Qty	Cat. No.	Qty	Cat. No.	Qty	Cat. No.
2	2	2	HFB22P1	4	38 X (*) HEB	4	38CHEN	4	38SW
3	3	2	HFB33P1	4	38 X (*) HEB	4	38CHEN	4	38SW
4	2	2	HFB42P1	4	38 X (*) HEB	4	38CHEN	4	38SW
4	4	2	HFB44P1	4	50 X (*) HEB	4	50CHEN	4	50SW
6	3	2	HFB63P1	4	50 X (*) HEB	4	50CHEN	4	50SW
6	6	2	HFB66P1	4	62 X (*) HEB	4	62CHEN	4	62SW
8	8	2	HFB88P1	4	75 X (*) HEB	4	75CHEN	4	75SW

† Ordered separately from BURNDY®.
* See table below when ordering assembly clamping bolts to specify correct bolt length in Cat. #.

Bolt Length									
Clamp Number	"J" Bolt Dia.	When Z = 1.25	When Z = 1.50	When Z = 1.75	When Z = 2.00	When Z = 2.25	When Z = 2.50	When Z = 2.75	When Z = 3.00
HFB22P1	3/8	3.00	3.25	3.50	4.00	4.00	4.50	4.50	5.00
HFB33P1	3/8	3.00	3.25	3.50	4.00	4.00	4.50	4.50	5.00
HFB42P1	3/8	3.00	3.25	3.50	4.00	4.00	4.50	4.50	5.00
HFB44P1	1/2	3.25	3.50	3.75	4.00	4.50	4.50	5.00	5.00
HFB63P1	1/2	3.25	3.50	3.75	4.00	4.50	4.50	5.00	5.00
HFB66P1	5/8	3.50	4.00	4.00	4.50	4.50	5.00	5.00	5.50
HFB88P1	3/4	3.75	4.00	4.50	4.50	5.00	5.00	5.50	5.50

NOTE: When ordering assembly bolts specify correct bolt length in catalog number as indicated in table.

Blue highlighted items are industry standard and most frequently ordered.

TYPE HFB-N

BAR CLAMP TAP PAD ADAPTER

For Copper Bar

High conductivity copper, tap pad adapter provides a NEMA drilled contact pad when assembled to the HFB-P1 clamps. Tap connections can be made from copper bus bar(s) without drilling, by bolting standard mechanical or compression terminal pads directly to the pre-drilled tap pad adapter.

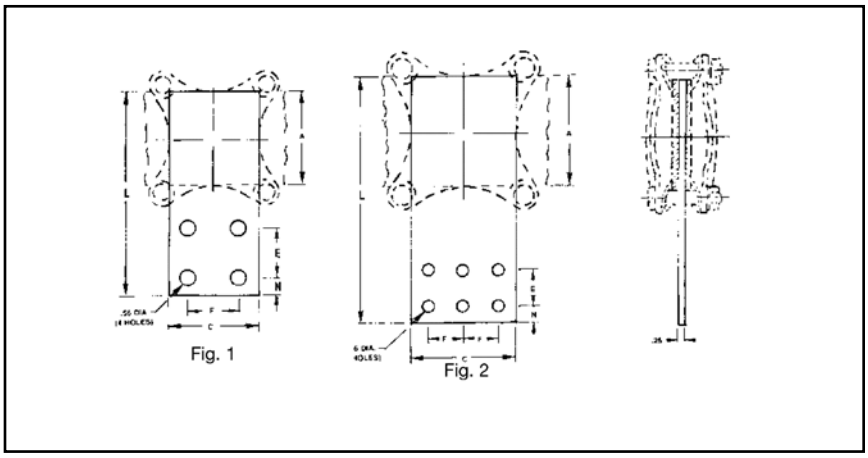

Catalog Number	Fig. #	A & C	E & F	L	N	Use with 'H' Clamp Catalog Number ①
HFB33-4N	1	3.00	1.75	7.00	0.62	**HFB33P1**
HFB44-4N	1	4.00	1.75	9.12	1.12	**HFB44P1**
HFB66-6N	2	6.00	1.75	11.31	1.12	**HFB66P1**

① 'H' Clamp (two required per assembly) and hardware (as shown) not included with bar clamp tap pad, order separately.

TYPES KA-U, KKA-U

UNIVERSAL TERMINAL

For Aluminum and Copper Conductors

These dual-rated one-conductor lugs are constructed from high strength aluminum alloy and electro tin-plated to provide low contact resistance.

AL9CU

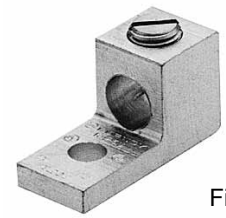

Fig. 1

Fig. 2

Fig. 3

Fig. 4

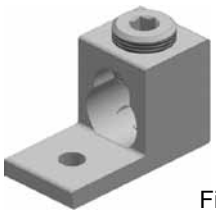

Fig. 5

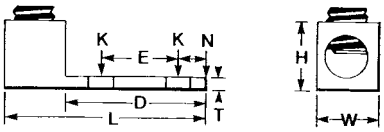

Catalog Number*	Fig. No.	Wire Range Aluminum or Copper	Stud Hole Size	D	L	N	** W	E	T	** H	Recommended Tightening ▲ Torque (in-lb)
KA6U	1	14 AWG-6 AWG	1/4	0.63	1.06	0.25	0.50	—	0.09	0.51	45
KA2U	1	14-2	1/4	0.63	1.16	0.31	0.50	—	0.10	0.56	50
KA25U	1	14 AWG-1/0	1/4	0.81	1.50	0.44	0.63	—	0.19	0.92	50
KA26U	2	6-2/0	1/4	0.81	1.47	0.45	0.63	—	0.19	0.80	120
KA29U	2	6-250	5/16	0.94	2.00	0.47	1.00	—	0.25	1.14	275
KA30U	2	6 AWG-300 kcmil	5/16	0.94	2.00	0.45	1.00	—	0.25	1.14	275
KA31U	2	6 AWG-350 kcmil	3/8	1.03	2.25	0.52	1.13	—	0.25	1.27	275
KA34U	2	4 AWG-500 kcmil	3/8	1.50	2.81	0.88	1.51	—	0.31	1.58	500
KA36U	2	2 AWG-600 kcmil	3/8	1.72	3.19	0.78	1.50	—	0.44	1.58	500
KA40U	2	300 kcmil-800 kcmil	1/2	1.85	3.50	0.81	1.75	—	0.50	1.95	550
KA44U	2	500 kcmil-1000 kcmil	1/2	1.69	3.50	0.88	1.75	—	0.50	1.95	550
KKA31U-2N	3	6 AWG-350 kcmil	1/2	3.16	5.50	0.63	1.25	1.75	0.38	1.52	275
KA36U-2N	4	2 AWG-600 kcmil	1/2	3.22	4.69	0.63	1.50	1.75	0.44	1.57	500
KA40U-2N	4	300 kcmil-800 kcmil	1/2	3.03	4.75	0.63	1.75	1.75	0.50	1.95	500
KA44U-2N	4	500 kcmil-1000 kcmil	1/2	3.03	4.75	0.63	1.75	1.75	0.50	1.95	550
KA30226U	5	2 Str. - 300 kcmil or (2) 4 Str. - 2/0 Str.	5/16	1.31	2.31	2.00	0.86	–	0.25	1.50	275
KA36229U	5	4 Str. - 600 kcmil or (2) 250 kcmil - 1/0 Str.	5/8	1.50	2.81	1.00	1.38	–	0.31	1.81	375
KA39229U	5	1/0 Str. - 750 kcmil or (2) 1/0 Str. - 250 kcmil	1/2	1.50	2.81	1.00	1.38	–	0.31	1.81	375

* "N" indicates NEMA standard stud holes.

▲ Listed torque values are for maximum conductor sizes accommodated.

Consult UL486 Tables 7-4, 7-5, 7-6 for smaller conductor sizes.

** Maximum dimension.

Blue highlighted items are industry standard and most frequently ordered.

TYPES KA-UAR

UNIVERSAL ANTI-ROTATE TERMINALS

(One Conductor)
For Aluminum and Copper Conductors

These dual-rated one-conductor lugs are constructed from high strength aluminum alloy and electro tin-plated to provide low contact resistance. These lugs also contain a bottom anti-turn tab.

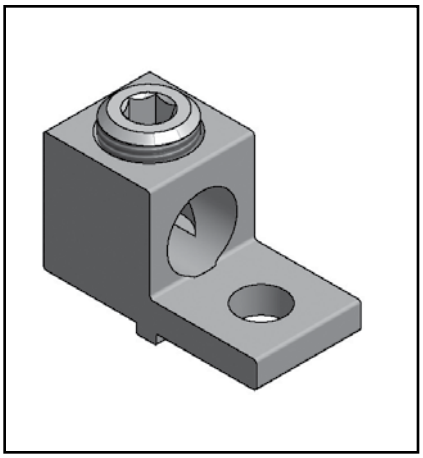

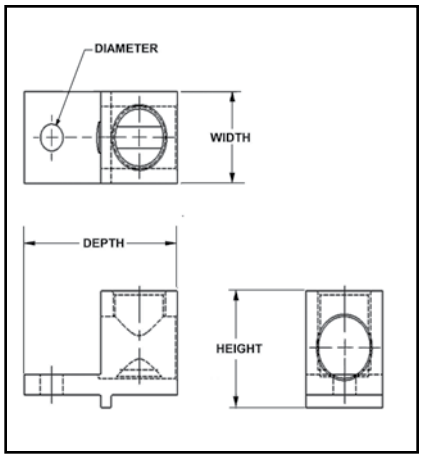

AL9CU

Catalog Number	Wire Range Aluminum or Copper	Stud Hole Size	Depth	Width	Height	Recommended Tightening ▲ Torque (in-lb)
KA4UAR	14 - 4	1/4	1.16	0.50	0.55	45
KA25UAR	14 - 1/0	1/4	1.47	0.63	0.81	50
KA26UAR	14 - 2/0	1/4	1.47	0.63	0.81	120
KA30UAR	6 - 300	1/4	1.56	0.94	1.13	275
KA31UAR	6 - 350	5/16	1.19	1.00	1.13	275
KA36UAR	4 - 600	3/8	2.75	1.38	1.57	375

Listed torque values are for maximum conductor sizes accommodated. Consult UL486 Tables 7-4, 7-5, 7-6 for smaller conductor sizes.

TYPE K2A-U

UNIVERSAL TERMINAL

(Two Conductor)
For Aluminum and Copper
Conductors

These dual-rated two-conductor lugs are constructed from high strength aluminum alloy and electro tin-plated to provide low contact resistance.

AL9CU

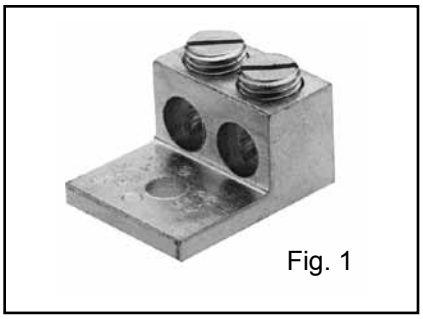

Fig. 1

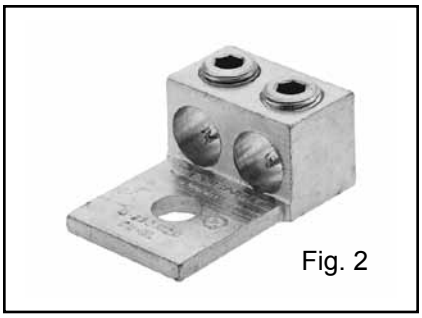

Fig. 2

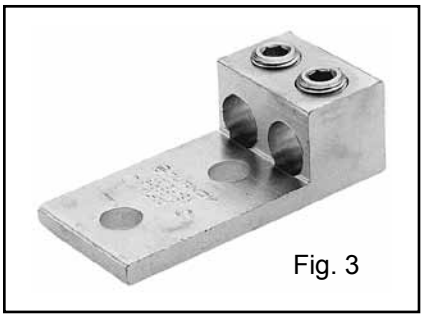

Fig. 3

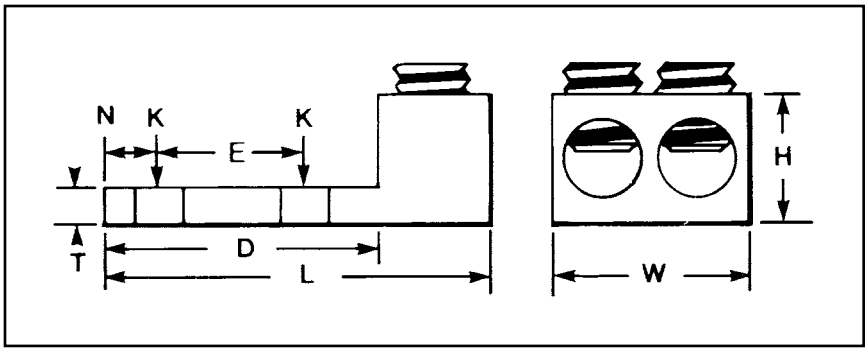

Catalog Number*	Fig. No.	TWO: Wire Range (Aluminum or Copper)	Stud Hole Size	D	L	N	** W	E	T	** H	Recommended Tightening ▲ Torque (in-lb)
K2A25U	1	14 AWG-1/0	1/4	0.81	1.47	0.44	1.13	—	0.19	0.79	50
K2A26U	2	14 AWG-2/0 AWG	1/4	0.81	1.47	0.44	1.25	—	0.19	0.80	120
K2A29U	2	6 AWG-250 kcmil	3/8	1.50	2.56	0.50	1.66	—	0.25	1.20	275
K2A31U	2	6 AWG-350 kcmil	1/2	1.69	2.88	0.88	1.94	—	0.25	1.26	275
K2A36U	2	2 AWG-600 kcmil	1/2	1.75	3.20	0.63	2.41	—	0.44	1.58	375
K2A40U	2	300 kcmil-800 kcmil	5/8	1.66	3.38	0.88	3.19	—	0.50	1.95	500
K2A44U	2	500 kcmil-1000 kcmil	5/8	1.66	3.50	0.88	3.52	—	0.50	1.95	500
K2A31U-2N	3	6 AWG-350 kcmil	1/2	3.00	4.50	0.63	2.31	1.75	0.31	1.39	275
K2A36U-2N	3	2 AWG-600 kcmil	1/2	3.22	4.69	0.63	2.41	1.75	0.44	1.39	375
K2A40U-2N	3	300 kcmil-800 kcmil	1/2	3.03	4.75	0.63	3.19	1.75	0.50	1.95	375
K2A44U-2N	3	500 kcmil-1000 kcmil	1/2	3.03	4.75	0.63	3.19	1.75	0.50	1.95	375

* "N" indicates NEMA standard stud holes.
▲ Listed torque values are for maximum conductor sizes accommodated. Consult UL486 Tables 7-4, 7-5, 7-6 for smaller conductor sizes.
** Maximum dimension.

Blue highlighted items are industry standard and most frequently ordered.

TYPES K3A-U, KK3A-U

UNIVERSAL TERMINAL

(Three Conductor)
For Aluminum and Copper Conductors

Dual-rated three-conductor lugs are constructed from high strength aluminum alloy and electro tin-plated to provide low contact resistance.

AL9CU

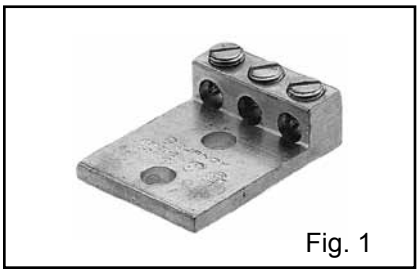
Fig. 1

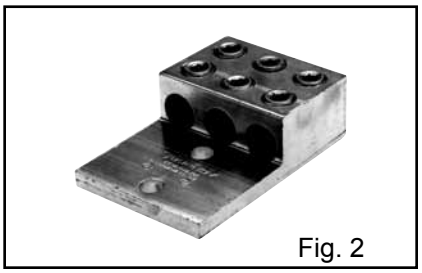
Fig. 2

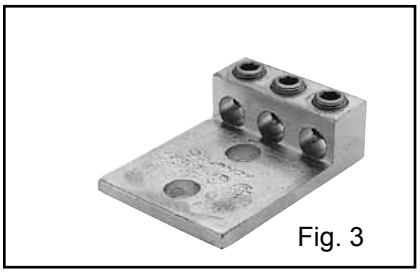
Fig. 3

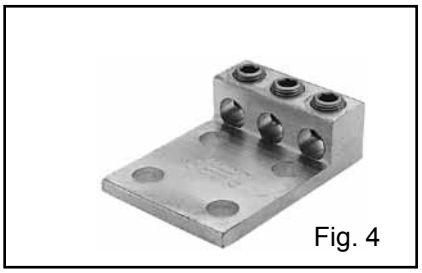
Fig. 4

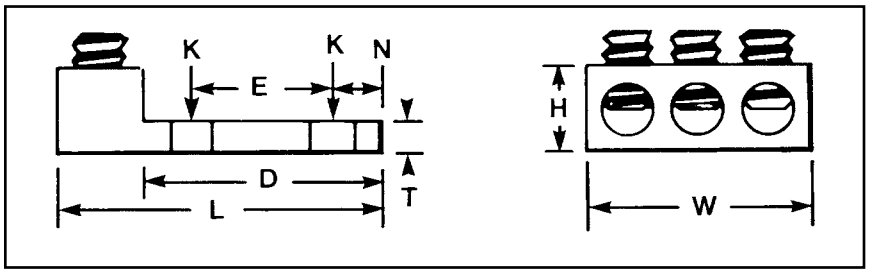

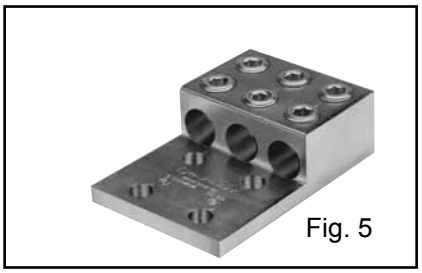
Fig. 5

Catalog Number**	Fig. No.	THREE: Wire Range (Aluminum or Copper)	K	Stud Hole Size	Dimensions							Rec. Tightening ▲ Torque (in-lb)
					D	L	N	W	E	T	H	
K3A2U-2*	1	14 AWG-2 AWG	11/32	5/16	1.63	2.19	0.34	1.59	0.88	0.19	0.62	50
K3A25U-2*	1	14 AWG-1/0	7/16	3/8	2.09	2.91	0.34	1.94	1.00	0.25	0.88	50
K3A26U-2N	3	14 AWG-2/0 AWG	9/16	1/2	3.06	3.75	0.63	1.95	1.75	0.19	1.79	50
K3A27U-2N	3	6 AWG-3/0 AWG	9/16	1/2	3.00	3.88	0.63	2.81	1.75	0.31	1.12	275
K3A29U-2N	3	6 AWG-250 kcmil	9/16	1/2	3.16	4.00	0.63	2.81	1.75	0.31	1.19	275
K3A31U-2N	3	6 AWG-350 kcmil	9/16	1/2	3.16	4.31	0.63	3.52	1.75	0.31	1.38	275
K3A36U-2N	3	2 AWG-600 kcmil	9/16	1/2	3.22	4.69	0.63	3.63	1.75	0.44	1.56	375
KK3A36U-2N	2	2 AWG-600 kcmil	9/16	1/2	3.00	5.50	0.63	4.22	1.75	0.38	1.52	375
KK3A40U-2N	2	300 kcmil-800 kcmil	9/16	1/2	3.34	6.19	0.63	4.81	1.75	0.56	1.89	375
KK3A44U-2N	2	500 kcmil-1000 kcmil	9/16	1/2	3.34	6.19	0.63	4.75	1.75	0.56	1.90	500
K3A2U-4*	4	14 AWG-2 AWG	11/32	5/16	1.63	2.19	0.34	1.59	0.88	0.19	0.62	50
K3A25U-4*	4	14 AWG-1/0	7/16	3/8	2.09	2.91	0.34	1.94	1.00	0.25	0.88	50
K3A27U-4N	4	6 AWG-3/0 AWG	9/16	1/2	3.00	3.88	0.63	2.81	1.75	0.31	1.12	275
K3A29U-4N	4	6 AWG-250 kcmil	9/16	1/2	3.00	4.00	0.63	2.81	1.75	0.31	1.19	275
K3A31U-4N	4	6 AWG-350 kcmil	9/16	1/2	3.00	4.31	0.63	3.00	1.75	0.31	1.38	275
K3A36U-4N	4	2 AWG-600 kcmil	9/16	1/2	3.22	4.69	0.63	3.63	1.75	0.44	1.56	375
K3A40U-4N	4	300 kcmil-800 kcmil	9/16	1/2	3.03	4.75	0.63	4.81	1.75	0.50	1.94	375
KK3A36U-4N	5	2 AWG-600 kcmil	9/16	1/2	3.00	5.50	0.63	4.22	1.75	0.38	1.52	375
KK3A40U-4N	5	300 kcmil-800 kcmil	9/16	1/2	3.34	6.19	0.63	5.34	1.75	0.56	1.89	500
KK3A44U-4N	5	500 kcmil-1000 kcmil	9/16	1/2	3.34	6.19	0.63	4.75	1.75	0.56	1.90	500

* Slotted screw.

** "N" indicates NEMA standard stud holes.

▲ Listed torque values are for maximum conductor sizes accommodated. Consult UL486 Tables 7-4, 7-5, 7-6 for smaller conductor sizes.

⚡ All 4N items see note LIGHTNING PROTECTION INFO.

Blue highlighted items are industry standard and most frequently ordered.

TYPES K4A-U, KK4A-U

UNIVERSAL TERMINAL

(Four Conductor)
For Aluminum and Copper Conductors

These dual-rated four conductor lugs are constructed from high strength aluminum alloy and electro tin-plated to provide low contact resistance.

AL9CU

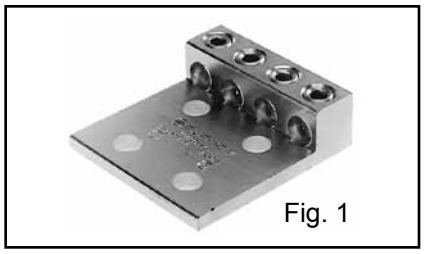
Fig. 1

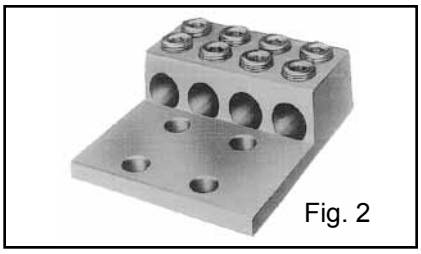
Fig. 2

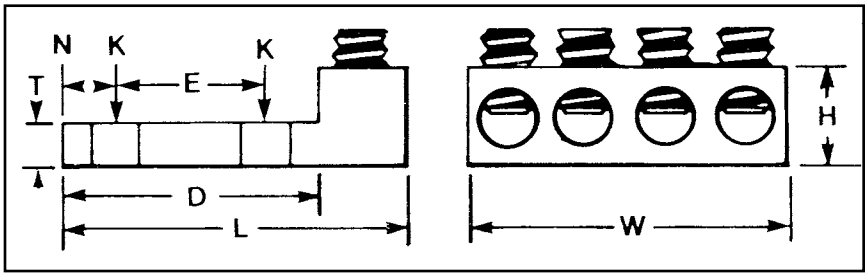

Catalog Number*	Fig. No.	FOUR: Wire Range (Aluminum or Copper)	Stud Hole Size	Dimensions							Recommended Tightening Torque (in-lb)
				D	L	N	W	E	T	H	
K4A29U-4N	1	6 AWG-250 kcmil	1/2	3.16	4.25	0.63	3.69	1.75	0.31	1.19	275
K4A31U-4N	1	6 AWG-350 kcmil	1/2	3.00	4.50	0.63	5.04	1.75	0.31	1.38	275
KK4A36U-4N	2	2 AWG-600 kcmil	1/2	3.34	5.63	0.63	5.00	1.75	0.44	1.51	375
KK4A40U-4N	2	300 kcmil-800 kcmil	1/2	3.41	6.19	0.63	6.00	1.75	0.56	1.88	375

* "N" indicates NEMA standard stud holes.

All 4N items see note LIGHTNING PROTECTION INFO.

TYPES K11A-U, K21A-U, K22A-U

UNIVERSAL TERMINAL

For Aluminum and Copper Conductors

Dual-rated panelboard lugs are constructed from high strength extruded aluminum alloy and electro tin-plated to provide low contact resistance.

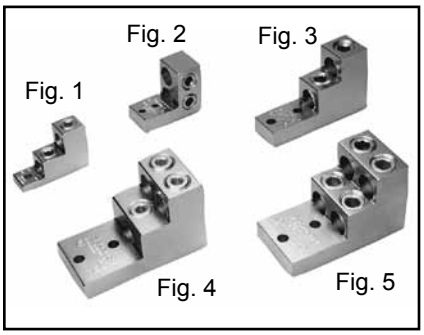

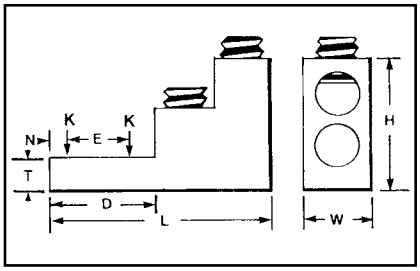

AL9CU

Catalog Number	Fig. No.	# of Conductors	Wire Range (Aluminum or Copper)	Stud Hole Size	D	L	N	W	E	T	H	Recommended Tightening ▲ Torque (in-lb)
K11A30U	1	2	6 AWG-300 kcmil	5/16	0.94	3.00	0.47	1.00	—	0.50	2.03	275
K11A34U-2	2	2	4/0 AWG-500 kcmil	1/4	2.31	2.91	0.25	1.44	0.69	0.63	2.40	375
K11A36U-2	3	2	2 AWG-600 kcmil	3/8	2.31	4.91	0.38	1.50	1.38	0.75	3.02	375
K21A36U-2	4	3	2 AWG-600 kcmil	3/8	2.31	4.91	0.38	2.50	1.38	0.75	3.03	375
K22A36U-2	5	4	2 AWG-600 kcmil	3/8	2.31	4.91	0.38	2.50	1.38	0.75	3.03	375
K11A39U-2	3	2	1/0 -750 kcmil	3/8	2.31	4.91	0.38	1.69	1.38	0.75	3.02	375
K22A39U-2	5	4	1/0 -750 kcmil	3/8	2.31	4.91	0.38	3.06	1.38	0.75	3.02	375

▲ Listed torque values are for maximum conductor sizes accommodated. Consult UL486 Tables 7-4, 7-5, 7-6 for smaller conductor sizes.

Blue highlighted items are industry standard and most frequently ordered.

TYPES K6A-U, K8A-U, KK6A-U, KK8A-U

UNIVERSAL TERMINALS

(Six and Eight Conductor)
For Aluminum and
Copper Conductors

These dual-rated six and eight conductor lugs are constructed from high strength aluminum alloy and electro tin-plated to provide low contact resistance.

Fig. 1

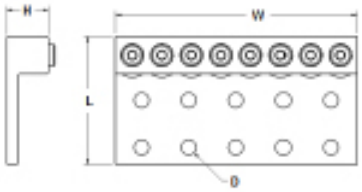

Fig. 2

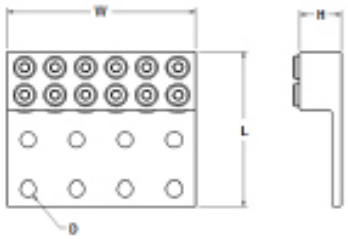

Catalog Number	Fig. No.	No. of Conductors	No. of Mtg Holes	Wire Range Aluminum or Copper	Stud Hole Size	Depth	Width	Height	Rec. Tightening Torque in-lb ♦
K6A34U-8	1	6	8	2 AWG - 500 kcmil	9/16	4.63	6.75	1.56	375
K8A34U-10	1	8	10	2 AWG - 500 kcmil	9/16	4.63	8.75	1.56	375
KK6A31U-8	2	6	8	6 AWG - 350 kcmil	9/16	5.31	6.38	1.50	275
KK8A31U-10	2	8	10	6 AWG - 350 kcmil	9/16	5.31	8.13	1.50	275
KK6A34U-8	2	6	8	2 AWG - 500 kcmil	9/16	5.50	6.75	1.50	375
KK8A34U-10	2	8	10	2 AWG - 500 kcmil	9/16	5.50	8.75	1.50	375
KK8A39U-10	2	6	10	2 AWG - 750 kcmil	9/16	6.19	8.25	1.88	550
KK8A39U-12	2	8	12	2 AWG - 750 kcmil	9/16	6.19	10.25	1.88	550
KK6A44U-12	2	6	12	350 kcmil - 1000 kcmil	9/16	6.19	10.00	1.88	550
KK8A44U-14	2	8	14	350 kcmil - 1000 kcmil	9/16	6.19	12.12	1.88	550

♦ Listed torque values are for maximum conductor sizes accommodated. Consult UL486 Tables 7-4, 7-5, & 7-6 for smaller conductor sizes

TYPE KAU-KIT

TRANSFORMER LUG KIT

These dual-rated lugs are constructed from high strength aluminum alloy and electro tin-plated to provide low contact resistance. Lugs and mounting hardware packaged together in these kits.

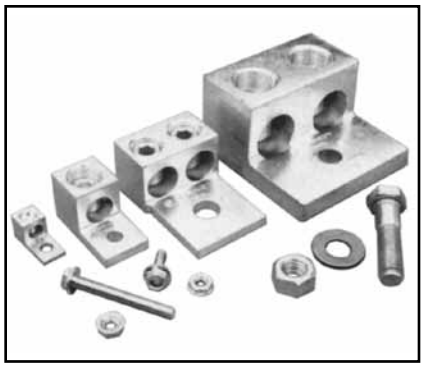

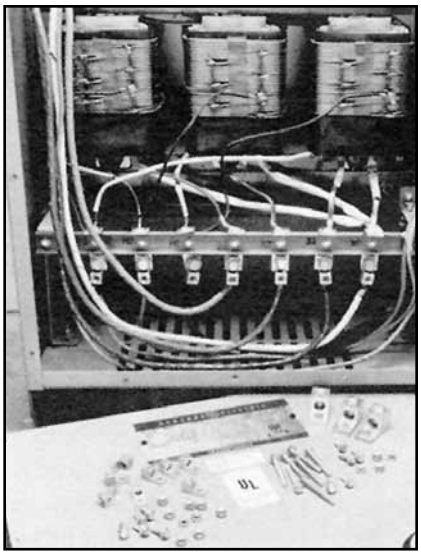

Features & Benefits

- UL Listed AL9CU dual rated set screw terminals and CSA Certified
  - ◊ Ensure the transformer feeders and taps are terminated properly.
- Plated steel cap screws and hex nuts with captive conical washers or individual Belleville washers
  - ◊ Terminal to bus connections are made using proper hardware resulting in true torque to pressure performance - compensates for dissimilar metal expansion and contraction.
- Hardware packed in plastic bag
  - ◊ No lost hardware prior to installation.
- Larger 800 kcmil lugs in KIT3 and KIT4
  - ◊ Accommodates common 750 kcmil tap conductors in larger transformers.

Catalog Number	Transformer KVA Rating	Terminals		Wire Range Aluminum or Copper	Hardware					
		Qty	Catalog Number		Qty	Bolt Size	Qty	Nut	Qty	Washer
KAU-KIT1	15 - 37.5 1Ø 15 - 45 3Ø	8 4	**KA2U** **KA29U**	14 AWG-250 kcmil	8	1/4-20 X 3/4 HH	8	1/4 X 20 HN	-	Captive to Nut
KAU-KIT2	50 - 75 1Ø 75 - 112.5 3Ø	12	**KA29U**	6 AWG-250 kcmil	8 8	1/4-20 X 3/4 HH 1/4-20 X 2 HH	16	1/4 X 20 HN	-	Captive to Nut
KAU-KIT3	100 - 167 1Ø 150 - 300 3Ø	6 7	**K2A31U** **K2A40U**	6 AWG-800 kcmil	5 6	1/2-13 X 3 HH 1/2-13 X 2-1/2 HH	11	1/2-13 HN	22 11	1/2 FW 1/2 Belleville
KAU-KIT4	400 - 500 3Ø	15	**K2A40U**	300 kcmil-800 kcmil	7 4	1/2-13 X 2 HH 1/2-13 X 2-1/2 HH	11	1/2-13 HN	22 11	1/2 FW 1/2 Belleville

HH = Hex Head
HN = Hex Nut
FW = Flat Washer

TYPES K-AG1

ALUMINUM NEUTRAL BAR

These aluminum neutral bars are dual rated for copper and aluminum conductors, and are manufactured from high strength 6061-T6 aluminum alloy and are electro tin plated to provide low contact resistance and protection against corrosion.

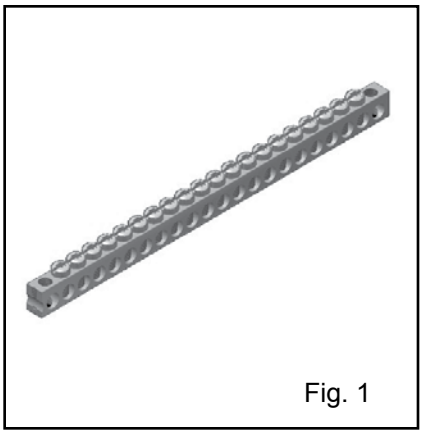

Fig. 1

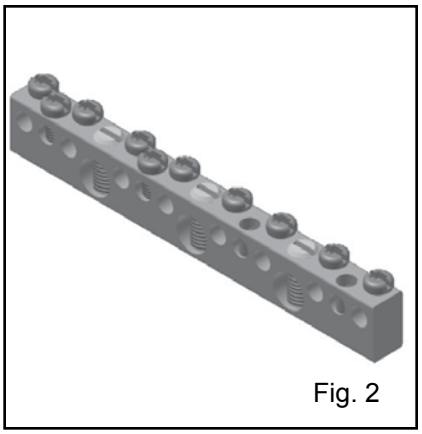

Fig. 2

AL9CU

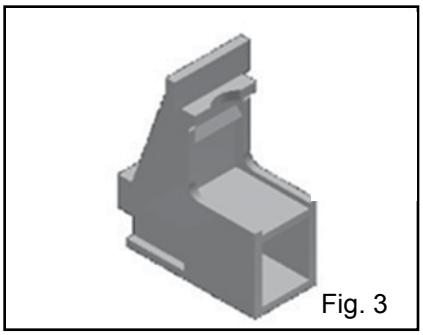

Fig. 3

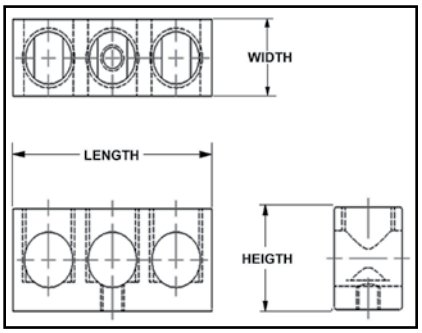

Catalog Number	Fig.	Wire Range Aluminum or Copper	Total Number of Holes	Total Number of Circuits	Mount Hole Locations	Height	Width	Length
K2P4CAG1	1	14 - 4	3	2	2	0.44	0.31	1.09
K3P4CAG1	1	14 - 4	5	3	1, 5	0.44	0.31	1.67
K9P4CAG1	1	14 - 4	11	9	4, 8	0.44	0.31	3.53
K13P4CAG1	1	14 - 4	15	13	6, 12	0.44	0.31	4.77
K15P4CAG1	1	14 - 4	17	15	6, 14	0.44	0.31	6.01
K5P6C2P1/0CAG1	2	14 - 1/0 14 - 6	7	(5) 14 - 6 (2) 14 - 1/0	–	0.62	0.38	2.26
K12P6C3P1/0CAG1	2	14 - 1/0 14 - 6	15	(12) 14 - 6 (3) 14 - 1/0	–	0.62	0.38	4.34
K14P6C5P1/0CAG1	2	14 - 1/0 14 - 6	19	(14) 14 - 6 (5) 14 - 1/0	–	0.62	0.38	5.77
K16P6C5P1/0CAG1	2	14 - 1/0 14 - 6	23	(16) 14 - 6 (5) 14 - 1/0	–	0.62	0.38	6.97
KAG1MTGBRKT ♦	3	–	–	–	–	–	–	

♦ (2) KAG1MTGBRKT are necessary to mount neutral bars into enclosure

TYPES K-G1

COPPER NEUTRAL BAR

These copper neutral bars are manufactured from high strength pure electrolytic copper to insure maximum strength and conductivity.

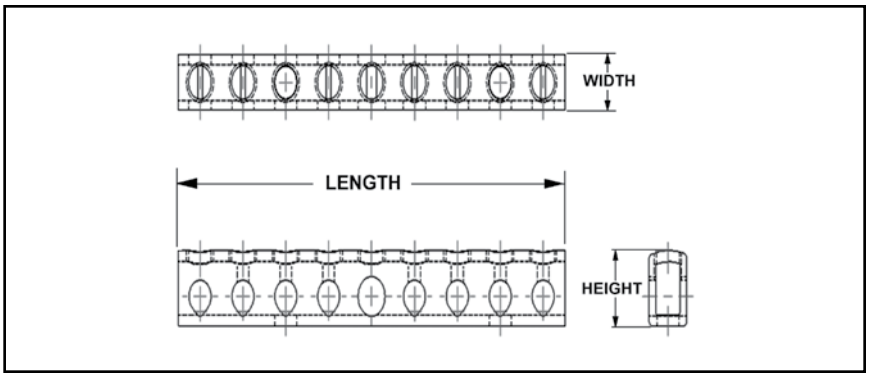

AL9CU

Catalog Number	Number of Outlets	Conductor Range		Mounting Holes	Dimensions	Width	Length
		Line	Circuit				
K6P4CG1	6	14 - 4	6 - 14	0.20	0.23	0.34	3.56
K8P4CG1	8	14 - 4	6 - 14	0.20	0.47	0.34	4.37
K10P4CG1	10	14 - 4	6 - 14	0.20	0.75	0.34	5.15
K12P4CG1	12	14 - 4	6 - 14	0.20	0.75	0.34	5.94
K14P4CG1	14	14 - 4	6 - 14	0.20	0.75	0.34	6.75
K174P4CG1	174	14 - 4	6 - 14	none	0.47	0.34	69.00

TYPE AMS

DUAL RATED SPLICER/REDUCER

For Copper and Aluminum Cable

All splicer/reducers are dual rated for use with aluminum and copper conductors and are constructed from high strength, tin plated aluminum. PENETROX™ oxide inhibiting joint compounds are recommended for all aluminum applications.

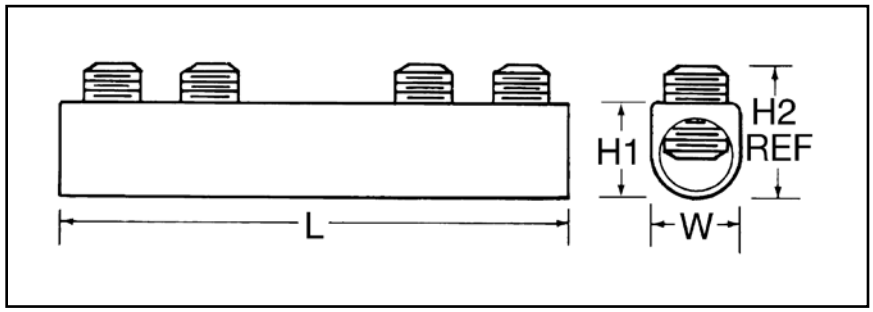

Features & Benefits

- All connectors are tin-plated
  - ◊ Provide low contact resistance and prevents galvanic corrosion
- Connectors feature rounded bottoms
  - ◊ Facilitates taping
- Solid center barrier
  - ◊ Prevents contact of dissimilar metals
- Large screw diameters
  - ◊ Ensures greater surface contact with wires for maximum pullout force
- Large cable ranges
  - ◊ Each splice is also an effective reducing connector

Catalog Number	Wire Range Aluminum & Copper	L	W	H1	H2 Max	Number of Screws	Screw Diameter	Hex Size
AMS-2*	14 AWG-2 AWG	1-19/32	9/16	9/16	0.79	2	3/8	Slot
AMS-0*	14 AWG-1/0	1-29/32	3/4	3/4	0.86	2	7/16	Slot
AMS-4/0	6 AWG-4/0 AWG	2-5/16	1	1-3/32	1.28	2	9/16	5/16
AMS-250	6 AWG-250 kcmil	4-3/32	1	1-3/32	1.29	4	5/8	5/16
AMS-350	6 AWG-350 kcmil	4-11/32	1	1-3/32	1.3	4	11/16	5/16
AMS-500	3/0 AWG-500 kcmil	4-25/32	1-1/4	1-3/8	1.48	4	13/16	3/8
AMS-750	250 kcmil-750 kcmil	6-1/6	1-7/16	1-5/8	1.98	4	15/16	1/2
AMS-1000	500 kcmil-1000 kcmil	8-11/16	1-21/32	1-7/8	2.34	6	1-1/8	9/16

* Slotted Screws. H2 measured with maximum conductors, reference only.

✓ Complies with NFPA 78-86.

Blue highlighted items are industry standard and most frequently ordered.

TYPE AGSKIT

ABOVE GRADE SPLICE KITS

For all Aluminum or Copper/Aluminum Combinations

Type AGS Above Grade Splice Kit consists of a standard AMS splice/reducer and a heavy wall heat-shrink sleeve. The AMS Splice is dual rated for use with aluminum and copper conductors and are constructed from high strength, tin plated aluminum that provides low contact resistance and reduces the effects of galvanic corrosion. Connector is installed with common installation tools. The heavy wall heat shrink sleeve is lined with adhesive material, providing a positive seal against moisture egress. Heat shrink sleeve is installed with standard propane torch, or electric heat gun.

Fig. 1

Fig. 2

Catalog Number	Figure Number	Wire Range
AGSKIT2	1	8 AWG-2 AWG
AGSKIT250	2	1 AWG-250 kcmil

TYPE UGSKIT

WATERTIGHT/ UNDERGROUND SPLICE KITS

For all Aluminum or Copper/Aluminum Combinations

Type UGS Watertight Underground Splice Kit consists of a standard AMS splice/reducer and two heavy wall heat-shrink sleeves. The AMS Splice is dual rated for use with aluminum and copper conductors and are constructed from high strength, tin plated aluminum that provides low contact resistance and reduces the effects of galvanic corrosion. Connector installed with common installation tools. Both heavy wall heat shrink sleeves are lined with adhesive material, providing a watertight splice that can withstand abrasions that may occur during direct burial applications. Heat shrink sleeve installed with standard propane torch, or electric heat gun.

Fig. 1

Fig. 2

Catalog Number	Figure Number	Wire Range
UGSKIT2*	1	8 AWG-2 AWG
UGSKIT250*	2	1 AWG-250 kcmil

*UL486D Listed for Direct Burial

Blue highlighted items are industry standard and most frequently ordered.

Direct Burial UNITAP™ Connectors

UNITAP™

Dual Rated Multiple Tap Connector

These rubber insulated, dual rated connectors are for use in networks up to 600V. Suitable in light fixture pole bases in commercial, industrial, or residential markets. Distribution within strip malls, for use in any multi-tenant facility. No taping or heat shrink required.

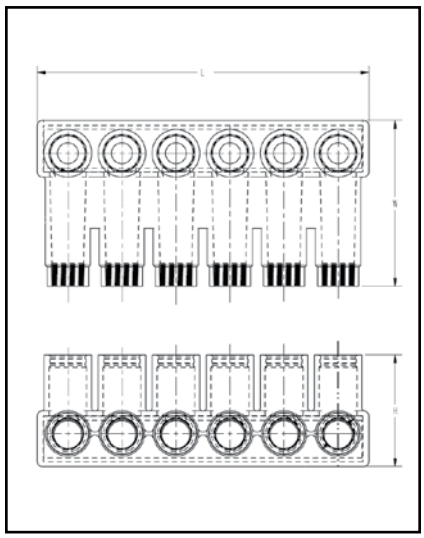

Features & Benefits

- Dual rated for aluminum or copper conductors
- Each unit is individually marked for ease of identification
- Supplied with aluminum set-screws
- Covering is the highest quality EPDM rubber
- Supplied with oxide inhibitor pre-installed
- Suitable for direct burial
- Meets ANSI C119.1 and C119.4 requirements
- Rated 600V and 90° C; UL Listed and CSA Certified
- For use in wet or damp locations
- Silicone provided for conductor insertion

Catalog Number	# of Ports	Wire Range (AWG/kcmil)	L	W	H	Wire Strip Length (in)
BIBS3502DB	2	12 AWG-350 kcmil	2.61	4.06	2.46	1.125
BIBS3503DB	3	12 AWG-350 kcmil	3.82	4.06	2.46	1.125
BIBS3504DB	4	12 AWG-350 kcmil	5.03	4.06	2.46	1.125
BIBS3505DB	5	12 AWG-350 kcmil	6.24	4.06	2.46	1.125
BIBS3506DB	6	12 AWG-350 kcmil	7.45	4.06	2.46	1.125
BIBS5003DB	3	10 AWG-500 kcmil	4.31	4.58	3.13	1.50
BIBS5004DB	4	10 AWG-500 kcmil	5.69	4.58	3.13	1.50
BIBS5005DB	5	10 AWG-500 kcmil	7.06	4.58	3.13	1.50
BIBS5006DB	6	10 AWG-500 kcmil	8.44	4.58	3.13	1.50

Recommended Torque Values for Direct Burial UNITAP™		Recommended BURNDY® Torque Wrench
Conductor Size	Recommended Torque Range	
#12 - #6 AWG	125 - 150 in-lbs	BTW30150
#4 - 3/0 AWG	180 - 240 in-lbs	BTW150750
4/0 - 350 AWG	275 - 450 in-lbs	BTW150750
400 - 1000 AWG	475 - 550 in-lbs	BTW150750

Blue highlighted items are industry standard and most frequently ordered.

TYPE UGSKIT8

UF DIRECT BURIAL SPLICE KIT

Type UGS UF Splice Kit consists of a UF splice connector and a heavy wall heat-shrink sleeve. The UF splice connector can accommodate up to four UF conductors and is installed with common installation tools. The heavy wall heat shrink sleeve is lined with an adhesive material, providing a water-tight splice that can withstand abrasions that may occur during direct burial applications. Heat shrink sleeve installed with standard propane torch, or electric heat gun.

Catalog Number	Wire Range
	Copper
UGSKIT8*	14 AWG-8 AWG

*UL486D Listed for Direct Burial

TYPE UGS350ULDB

IN-LINE SPLICE/REDUCER

For Direct Burial

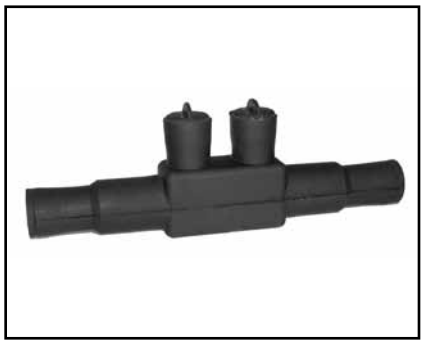

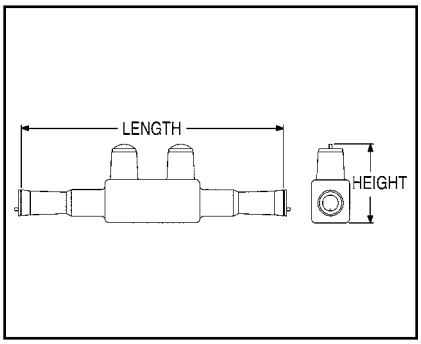

Features & Benefits

- EPDM rubber covered 6061-T6 aluminum connector
- Dual rated AL9CU for copper or aluminum conductor
- UL Listed and CSA Certified for Direct Burial
- Broad range taking capability
- Low installation cost

Catalog Number	Wire Range	Length	Height	Hex Size	Torque (In. Lbs.)
UGS350ULDB	12 AWG-350 kcmil	8.50	2.81	5/16	350

BURNDY UNITAP™

THE MOLE™

For Direct Burial

600V, 90° C

Designed specifically for direct burial applications, the MOLE™ in-line splice/reducer is made with a specialized plastisol material that forms a rugged weathertight connection.

Features & Benefits

- UL486D Listed for direct burial.
- AL9CU Dual-rated for copper and aluminum applications. 600V 90°C.
- Plastisol covered AL6061-T6 aluminum body saves time by eliminating the need for heat shrink.
- Oxide inhibitor pre-installed preventing moisture and contaminants from entering contact area.
- Range-taking capability reduces the number of connectors carried in inventory.

Catalog Number	Number of Ports	Wire Range (AWG/ kcmil)	L	W	H	Hex Key	Torque (In.-lbs.)	Wire Strip Length
BISR4-DB	2	#6 AWG-#4 AWG	4.30	0.68	1.39	1/8	50	7/8″
BISR1-DB	2	#2 AWG-#1 AWG	6.30	0.88	1.75	5/32	130	1-3/32″
BISR3/0-DB	2	1/0 -3/0 AWG	6.25	0.99	1.96	3/16	220	1-3/32″
BISR250-DB	2	4/0 AWG-250 kcmil	6.70	1.18	2.17	5/16	360	1-5/16″

BISR-DB = BURNDY Inline Splice/Reducer Direct Burial.
UNITAP™ rated for code conductor only.

QGFL

BARTAP™

For Copper Cable to Flat Bar or Pad

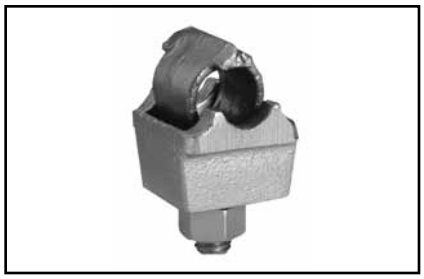

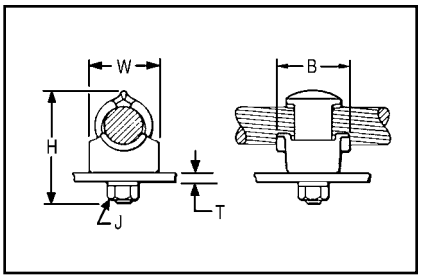

High copper alloy BARTAP™ for joining a range of cable to bar or pad. One-wrench installation. DURIUM™ nut and lockwasher.

Catalog Number	Copper Conductor	B	H	J	T (Max)	W
QGFL1CB1	#10 Sol-#1 Str	1-1/8	1-7/8	3/8	1/4	1
QGFL1CB1T6	#10 Sol-#1 Str	1-1/8	2-3/8	3/8	3/4	1
QGFL26B1	#8 Sol-#2/0 Str	1-1/4	2-1/8	3/8	1/4	1-1/8
QGFL26B1T6	#8 Sol-#2/0 Str	1-1/4	2-5/8	3/8	3/4	1-1/8
QGFL26B2*	#8 Sol-#2/0 Str	1-1/4	2-8/25	1/2	1/4	1-1/8
QGFL26B2T6*	#8 Sol-#2/0 Str	1-1/2	2-40/50	1/2	3/4	1-1/8
QGFL29B1*	#6 Str-250 kcmil	1-2/5	2-5/8	1/2	1/4	1-3/8
QGFL29B1T6*	#6 Str-250 kcmil	1-5/8	3-1/8	1/2	3/4	1-3/8
QGFL31B1*	2 AWG-350 kcmil	1-3/4	2-7/8	1/2	1/4	1-5/8
QGFL31B1T6*	2 AWG-350 kcmil	1-3/4	3-1/4	1/2	3/4	1-5/8
QGFL34B1	1/0 -500 kcmil	2	3-1/8	1/2	1/4	1-3/4
QGFL34B1T6	1/0 -500 kcmil	2	3-5/8	1/2	3/4	1-3/4
QGFL39B1	350 kcmil-750 kcmil	2-1/4	3-1/4	1/2	1/4	1-3/4
QGFL39B1T6	350 kcmil-750 kcmil	2-1/4	3-5/8	1/2	3/4	1-3/4
QGFL44B1	750 kcmil-1000 kcmil	2-1/4	3-3/8	1/2	1/4	2-1/8
QGFL44B1T6	750 kcmil-1000 kcmil	2-1/4	4-1/8	1/2	3/4	2-1/8
QGFL46B1	1000 kcmil-1500 kcmil	2-1/4	4	1/2	1/4	2-1/2
QGFL46B1T6	1000 kcmil-1500 kcmil	2-1/4	4-1/2	1/2	3/4	2-1/2
QGFL48B1	1500 kcmil-2000 kcmil	2-1/4	4-3/4	1/2	1/4	3

* Can be installed side by side or in-line on NEMA drilled bar.

FCB

TRANSFORMER TAP ADAPTER

Copper and Aluminum

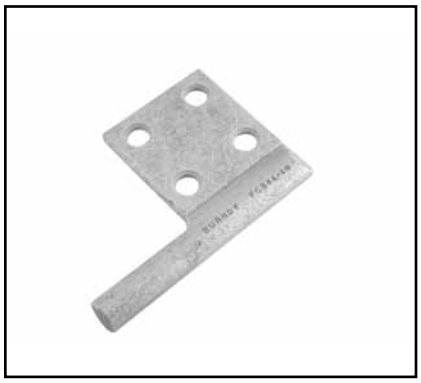

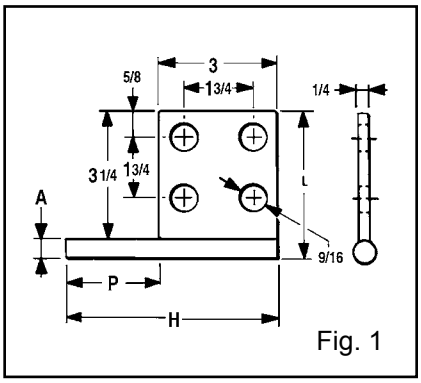

Fig. 1

Cast in one piece from copper alloy. Transformer tap adapter designed to accommodate from 1 to 6 NEMA drilled copper or aluminum terminal taps from a single secondary transformer outlet. Tin-plated. Order mounting hardware and tap terminals separately.

Catalog Number	Fig. No.	A Diameter	H Ref.	L	P
FCB63-4N	1	0.50	5.25	3.75	2.25
FCB63-6N	2	0.50	5.25	5.50	2.25
FCB64-4N	1	0.75	5.75	4.00	2.75
FCB64-6N	2	0.75	5.75	5.75	2.75
FCB65-4N	1	1.00	7.00	4.25	4.00
FCB63-2NP300	Not Shown	0.50	5.00	3.50	3.00
FCB64-44NP50	Not Shown	0.75	9.00	5.00	5.00

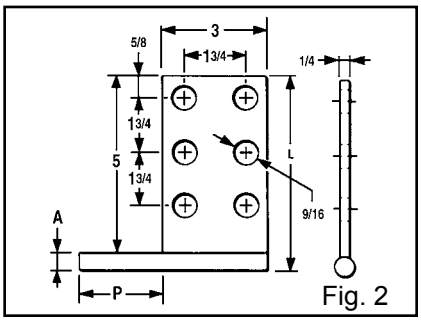

Fig. 2

NOTE: All pads are NEMA drilled.

Blue highlighted items are industry standard and most frequently ordered.

TYPE KPU-AC

POLYTAP™

Insulated Gutter Tap for All Copper and Aluminum Combinations

Wide range-taking tin-plated aluminum parallel clamp and insulating cover assembly for industrial and multiple story structure applications. Only six connectors cover the entire 14 Sol.-750 kcmil range. Covers having flexible fingers that conform to conductor, fully insulating the connection. UL486B Listed for 600 volts maximum 90° C service. Cover and connector are packaged together. No taping required.

600 Volt Max. 90° C

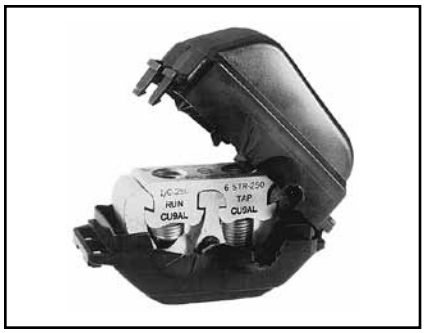

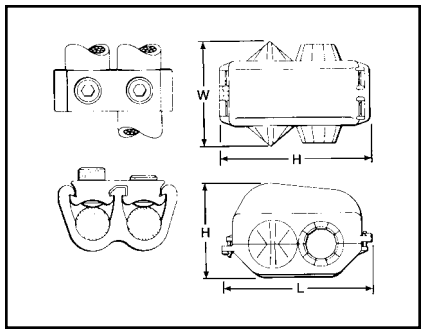

Catalog Number	Conductor Copper or Aluminum		W	H	L	Rec. Tightening ▲ Torque in-lb
	Run	Tap				
KPU29A26AC	1/0 -250 kcmil	14 AWG-2/0 AWG	3-1/8	3-3/8	4.24	375
KPU29A29AC	1/0 -250 kcmil	6 AWG-250 kcmil	3-1/8	3-3/8	4.24	375
KPU34A26AC	4/0 AWG-500 kcmil	14 AWG-2/0 AWG	3-1/2	3-1/2	4.58	450
KPU34A34AC	4/0 AWG-500 kcmil	6 AWG-500 kcmil	3-1/2	3-1/2	4.58	450
KPU39A26AC	500 kcmil-750 kcmil	14 AWG-2/0 AWG	3-1/2	3-83/100	5.06	600
KPU39A39AC	500 kcmil-750 kcmil	1/0 -750 kcmil	3-1/2	3-83/100	5.06	600

▲ Listed torque values are for maximum conductor combinations accommodated. Consult UL486 Tables 7-4, 7-5, 7-6 for smaller combinations.

⚡ See note LIGHTNING PROTECTION INFO.

TYPE UCU-AC

RISER TAP

600 VOLT MAX. 90° C MAX.

Parallel-groove riser tap and insulation cover for copper and aluminum. Wide range-taking assembly for apartment house and light industrial applications. Cover and connector are packaged together. Covers having insulating fingers that conform to conductors, fully insulating the connection. UL486B Listed for 600 volts max. 90° C service.

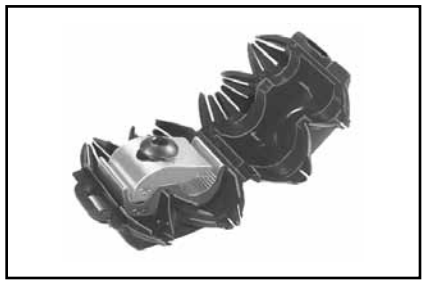

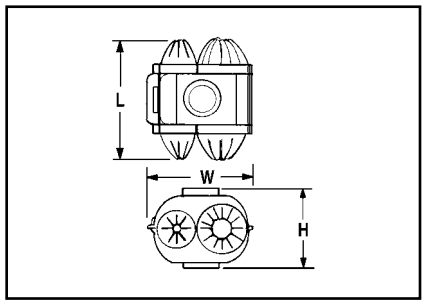

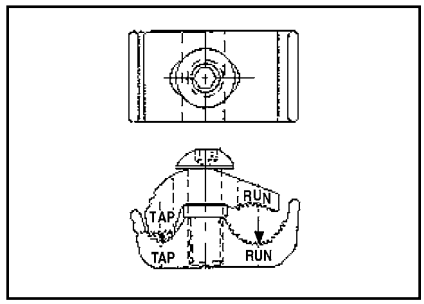

Catalog Number	Conductor Copper or Aluminum		W	H	L	Recommended Tightening ▲ Torque in-lb
	Run	Tap				
UCU28AC	#2 Str.- 4/0 Str.	#10 Sol. - #2 Str.	2-1/4	1-13/16	2-5/8	120

▲ Listed torque values are for maximum conductor combinations accommodated. Consult UL486 Tables 7-4, 7-5, 7-6 for smaller combinations.

Blue highlighted items are industry standard and most frequently ordered.

TYPE BIPC

UL Listed 90° C, *600 Volt

The Type BIPC, BURNDY® Insulation Piercing Connector is ideally suited for splicing and tapping aluminum and copper conductor wire sizes: #10 AWG to 500 kcmil.

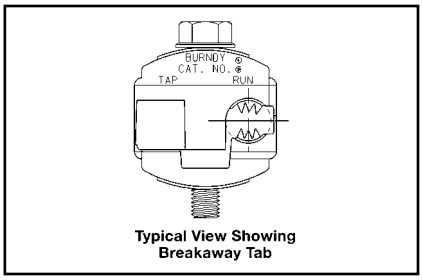

Typical View Showing Breakaway Tab

Features & Benefits

- Insulation piercing capability
  - ◊ Eliminates the need for conductor insulation stripping.
- UL486B Listed, AL9CU rated
  - ◊ For copper and aluminum conductor combinations up to 90° *600 Volt applications.
- Insulation piercing design
  - ◊ For use on hot-line applications - eliminates the need for taping.
- Easy snap-out tabs
  - ◊ Eases installation, protects connection from dirt and debris.
- Simple bolt-on connection
  - ◊ Eases installation.

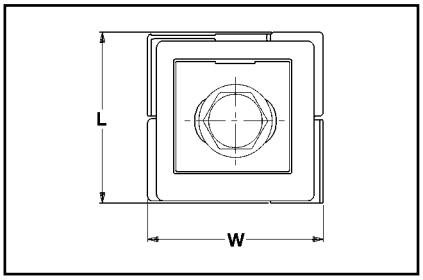

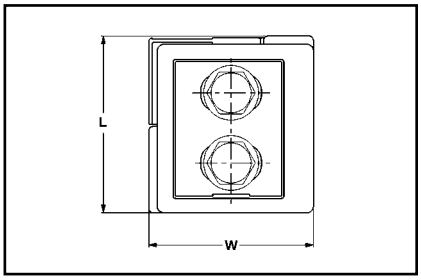

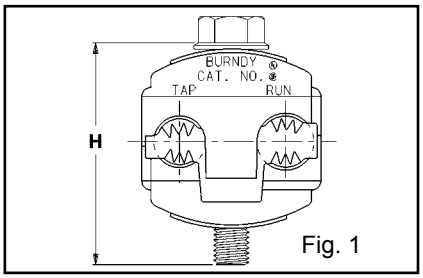

Fig. 1

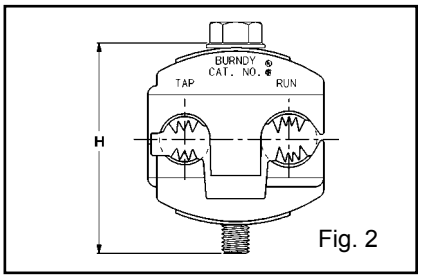

Fig. 2

Catalog Number	Conductor Range		Bolt Size	Socket Size	H	L	W	Recommended Tightening Torque	Max. Voltage Rating
	Run	Tap							
BIPC1/0-2*	1/0 - 8 AWG	2 - 8 AWG	5/16	1/2	2.00	1.53	1.53	180	600 V
BIPC4/0-6	4/0 - 1/0 AWG	1/0 - 6 AWG	5/16	1/2	2.50	2.12	2.00	250	300 V
BIPC4/0-1/0	4/0 - 1/0 AWG	4/0 - 1/0 AWG	5/16	1/2	2.50	2.12	2.06	250	300 V
BIPC350-4/0	350 - 4/0 AWG	4/0 - 10 AWG	3/8	9/16	3.00	1.59	2.50	375	300 V
BIPC350-350	350 - 4/0 AWG	350 - 4/0 AWG	3/8	9/16	3.00	2.62	2.75	300	300 V
BIPC500-4/0*	500 - 350 kcmil	4/0 - 4 AWG	3/8	9/16	3.25	1.80	2.62	400	600 V

* 600 Volt

Blue highlighted items are industry standard and most frequently ordered.

MISCELLANEOUS ACCESSORIES

TERMINAL BLOCKS

Molded General Purpose Phenolic Base 30 amps,
#10 studs, 1 piece per card, 300-volt rating
Meets UL component requirements

CLASS B:
Commercial Equipment 300 V RMS

CLASS C:
General Industrial 300 V RMS

Withstands volts, Vdc 10,500
Steel nickel plated screws

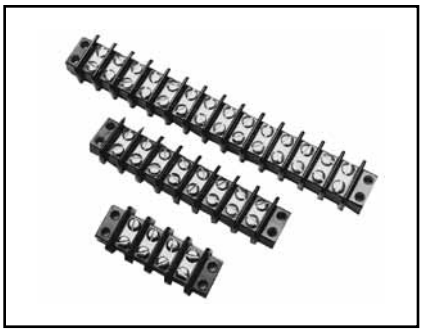

Catalog Number	Number of Circuits	General Description	Overall Length
RK149-2	2	Molded General Purpose Phenolic Base 30 amps, #10 studs 1 piece, per card 300-volt rating	2-3/32″
RK150-2	4		3-7/32″
RK225-2	6		4-11/32″
RK151-2	8		5-15/32″
RK152-2	10		6-19/32″
RK226-2	12		7-23/32″
RK153-2	14		8-27/32″
RK227-2	16		9-31/32″

For bulk pack contact factory.

POWER DISTRIBUTION BLOCKS

U-BLOK™

For Junction Box Applications

The U-BLOK™ system is a modern, state-of-the-art approach to multi-load power distribution applications. Among typical uses are multi-story or multi-unit buildings, HVAC, refrigeration, control panels, motor control, switch gear, elevator systems and materials handling equipment. U-BLOK™ is UL Listed for Copper or Aluminum conductors and rated for 600-volt applications. U-BLOK™ can be mounted on bases for use in troughs or bolted directly to junction boxes. AL9CU rated.

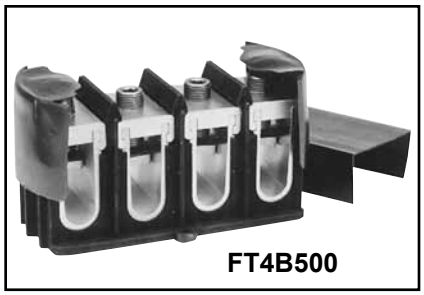

FT4B500

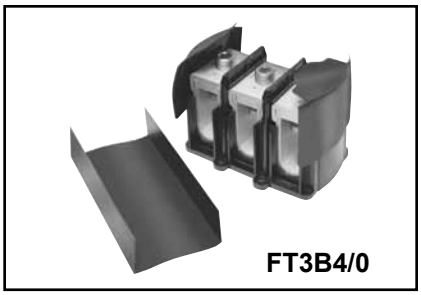

FT3B4/0

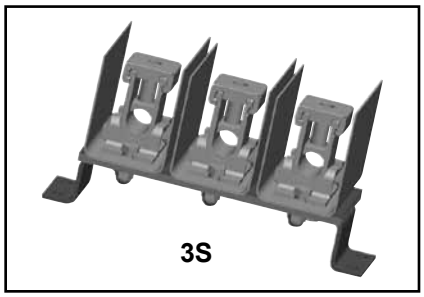

3S

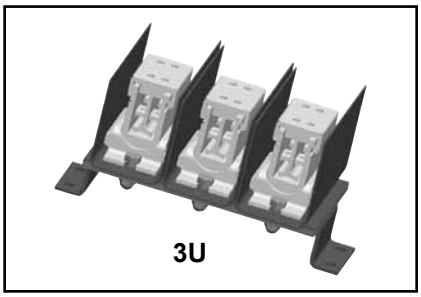

3U

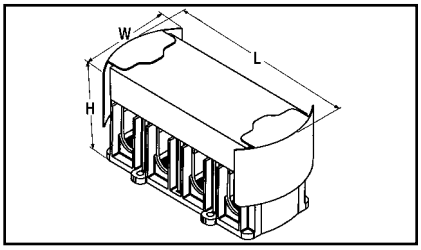

Features & Benefits

- Connector top slides OFF/ON for quick cable lay-in
  - ◊ Labor savings. Easy access for installation, modifications or retrofit.
- Electro-tin plated connectors in each pole
  - ◊ Durability. High-conductivity and resistance to corrosion.
- Compact size
  - ◊ Requires less space than traditional connection methods.
- Trough installations can be mounted on raised platforms
  - ◊ Passage of cables under block means through-cables need not be terminated
- Insulating covers and mounting blocks rated 94-VO
  - ◊ Saves costly taping, time and material. Conforms to or exceeds building codes.
- Connectors accommodate a wide range of wire sizes
  - ◊ Reduces parts inventory requirements.
- Feeder conductors can be cut or fed through on a continuous run
  - ◊ Ease of installation.

3 WIRE POWER DISTRIBUTION BLOCKS

Catalog Number	Max. Number of Wires per Phase	Conductor Copper or Aluminum*		W	L	H	Weight Each	Allen Wrench Size	Recommended Tightening Torque	Strip Length
		Run	Tap							
FT3B4/0	2	3/0 - 4/0	6 - 4/0	3-7/8	5-7/8	4-1/8	1-1/4	1/4	200	1-1/2
FT3B500	2	400 - 500	6 - 500	3-7/8	5-7/8	4-1/8	2-1/8	3/8	375	2-5/16
3S	2	250 - 350	6 - 350	3-5/8	9-3/4	4-7/8	3	1/4	200	1-3/4
3U	1 Run / 8 Tap	3/0 - 500	6 - 1/0	4-3/4	9-3/4	5-1/2	3	5/32	110	2-5/16 (Run); 1-5/32 (Tap)

4 WIRE POWER DISTRIBUTION BLOCKS

Catalog Number	Max. Number of Wires per Phase	Conductor Copper or Aluminum*		W	L	H	Weight Each	Allen Wrench Size	Recommended Tightening Torque	Strip Length
		Run	Tap							
FT4B4/0	2	3/0 - 4/0	6 - 4/0	3-7/8	7-7/8	4-1/8	2	1/4	200	1-1/2
FT4B500	2	400 - 500	6 - 500	3-7/8	7-7/8	4-1/8	2-3/4	3/8	375	2-5/16
4S	2	250 - 350	6 - 350	3-5/8	11-3/4	4-7/8	3-1/2	1/4	200	1-3/4
4U	1 Run / 8 Tap	3/0 - 500	6 - 1/0	4-3/4	11-3/4	5-1/2	3-1/2	5/32	110	2-5/16 (Run); 1-5/32 (Tap)

PENETROX™ inhibitor is recommended for all aluminum wire connections.
For two wire tap range is 8 through 1/0.

* Aluminum and copper conductors cannot be assembled under the same pressure plate or t-bar.

Blue highlighted items are industry standard and most frequently ordered.

U-BLOK™ MOUNTING PLATFORMS

For Trough Applications

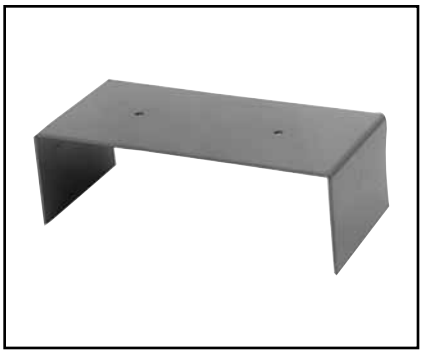

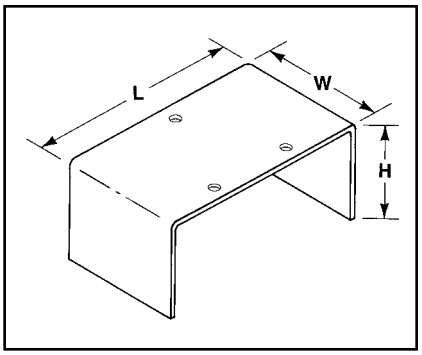

Catalog Number	W	L	H	Gutter Size	Weight Each (lb)
TBPT6*	4-1/4	5-7/8	1-1/2	6′	3/4
TBPT8	4-1/4	7-7/8	3-1/2	8″	1-1/4
TBPT10	4-1/4	9-7/8	4	10″	1-1/2
TBPT12	4-1/4	11-7/8	4	12″	1-3/4

Hole pattern shown is for reference only.

* Supercedes TBPT4/0-6 and TBPT350/500-6.

FLEXI-TAP™
ALLOWABLE AMPACITIES OF INSULATED CONDUCTOR, 60° TO 90° C **

Size AWG kcmil	Copper			Al or Copper Clad Al		
	60 deg. C	75 deg. C	90 deg. C	60 deg. C	75 deg. C	90 deg. C
12	25	25	30	20	20	25
10	30	35	40	25	30	35
8	40	50	55	30	40	45
6	55	65	75	40	50	60
4	70	85	95	55	65	75
3	85	100	110	65	75	85
2	95	115	130	75	90	100
1	110	130	150	85	100	115
1/0	125	150	170	100	120	135
2/0	145	175	195	115	135	150
3/0	165	200	225	130	155	175
4/0	195	230	260	150	180	205
250	215	255	290	170	205	230
300	240	285	320	190	230	255
350	260	310	350	210	250	280
400	280	335	380	225	270	305
500	320	380	430	260	310	350
600	355	420	475	285	340	385
700	385	460	520	310	375	420
750	400	475	535	320	385	435

**** NOTE**: Values referenced from Article 310 of the National Electric Code, Table 310-16, 1996. The above chart is to be used for REFERENCE ONLY. Please consult Table 310-16 of the National Electric Code (latest revision) for information regarding insulation type, voltage range, and conductor housings/surroundings. U-TAP™, U-BLOK™, and SPEC-BLOK™ connectors are rated for 90 deg. C by Underwriters' Laboratories. Use of 60 deg. C and 75 deg. C conductor(s) is valid, though only as determined by the National Electric Code.

SPEC-BLOK™ POWER DISTRIBUTION CONNECTORS

Unique, modular, made-to-order, power distribution assemblies accommodate any number of supply and load conductors in any number of poles. Capacity matches the conductors accommodated and SPEC-BLOK™ assures uniform loading. Adjacent poles are separated by easy-to handle, wrap-around insulating covers which eliminate taping and reduce heat build-up by allowing air to flow freely around connectors. SPEC-BLOK™ is UL Listed for copper or aluminum conductors for 600 volts. (AL9CU) Assemblies are mounted on platforms suitable for easy installation in wireway or junction box.

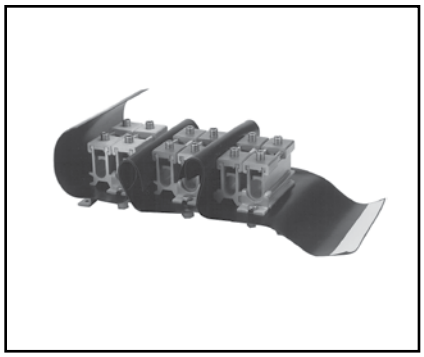

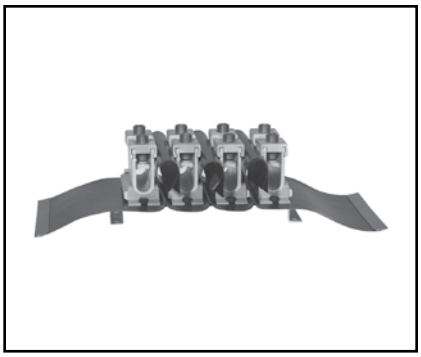

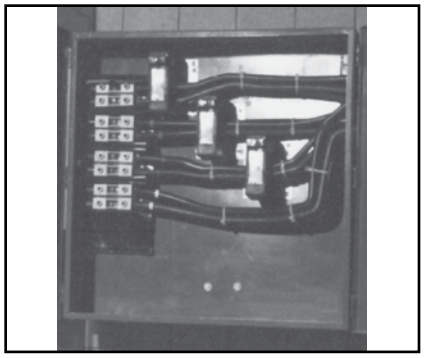

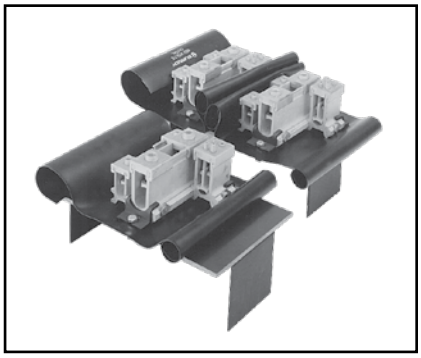

Features & Benefits

- Accommodate unlimited conductors
  - ◊ Fits wide range of applications. Eliminates need for non-UL-Listed improvisation.
- Connector elements tin-plated
  - ◊ Provides high reliability, low-resistance connections.
- User friendly, space-saving design
  - ◊ Easy to install - saves labor.
- 94-VO rated insulation folds into place insulating the components
  - ◊ Saves time and material. Allows easy installation.
- Connector caps removable for easy cable lay-in
  - ◊ Saves labor. Makes installation easier - allows installation of straight-through conductors. Eases retrofit.
- Belleville washers built-in on pressure screw assemblies, except in assemblies installed with a 5/32" Allen wrench
  - ◊ Provides high-integrity connections.
- Conductors can be cut or fed straight through
  - ◊ Straight through installation ideal for riser applications.

Contact BURNDY® or Technical Services: 1-800-451-4956, or BURNDY® Customer Service: 1-800-346-4175

Blue highlighted items are industry standard and most frequently ordered.

SPEC-BLOK™

Features & Benefits

- The SPEC-BLOK™ system includes 12 connector elements
  - ◊ A wide variety of conductor sizes can be accommodated
- Each element can be bolted together in parallel
  - ◊ Provides an efficient flow of current from one element to another
- AL9CU rated for Copper or Aluminum conductors
  - ◊ Dual-rated system, with UL486B's highest temperature rating
- 2 Wire (series), 4 (parallel), and Multi-Tap versions available
  - ◊ Nearly any conductor combination can be terminated
- Tin-plated Aluminum Alloy Construction
  - ◊ High-strength, corrosion-resistant connector elements
- All SPEC-BLOK™ connectors are custom made for nearly any Power Distribution system requirement
  - ◊ Time savings — pre-assembled in our factory for immediate installation!

SPEC-BLOK™ CONNECTORS

A

E

W

D

S

C

T

B

R

Q

U

P

Catalog Designation (Maximum Conductor)		Number of Conductors Accommodated		AL or CU Wire Range Under Each Cap		Dimensions				Allen Wrench Size
4 Conductor	2 Conductor	4 Conductor	2 Conductor	First Conductors MUST Be	Second Conductor (if required) May Be	Height On Max Conductors	Width	Length Without Insulator		
								4 Conductor	2 Conductor	
A	Q	1 to 4 (0, 1 or 2 per cap)	1 or 2 per cap	1/0 - 2/0	#12 - 2/0	2-9/16"	1-1/2"	2-1/8"	7/8"	5/32"
(2/0)										
B	R			3/0 - 250	#6 - 250	3-1/8"	1-11/16"	4-1/4"	1-3/8"	1/4"
(250)										
C	S			250 - 350	#6 - 350	3-5/16"	1-13/16"	4-5/8"	1-1/2"	
(350)										
D	T			400 - 500	#6 - 500	4-1/16"	2"	5-5/8"	1-3/4"	3/8"
(500)										
E	W			600 - 750	3/0 - 750	4-7/8"	2-1/4"	7-1/4"	2-5/8"	
(750)										

Catalog Designation (Maximum Conductor)	Number of Conductors Accommodated	Large Groove	Small Grooves**	Height On Maximum Conductors	Width	Length Without Insulator	Allen Wrench Size
P (1/0)	1 to 8 (0, 1 or 2 under each screw)	__	6 - 1/0	3-1/2"	2"	1-3/4"	5/32"
U (1/0 & 500)	2 to 9 (0, 1 or 2 under each screw plus one large conductor)	3/0 - 500	6 - 1/0	4-1/8"	2"		

** This range may be expanded to include #8 provided two conductors are being installed in that particular element.

Blue highlighted items are industry standard and most frequently ordered.

SPEC-BLOK™

MOUNTING PLATFORMS

SPEC-BLOK™ Mounting Platforms are rigid steel construction with a black finish.

They can be supplied for junction box mounting or wireway construction allowing trough conductors to pass underneath the assemblies.

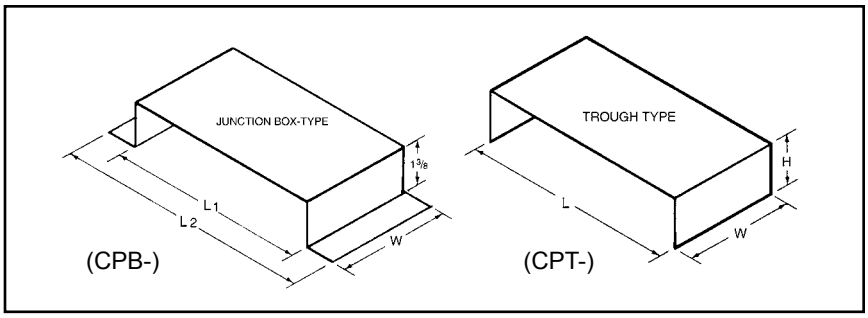

Catalog Number	L (Nominal)	L (Overall)	W (Overall)
CPB6	6	7-3/4	2-1/2
CPB8	8	9-3/4	2-1/2
CPB10	10	11-3/4	2-1/2
CPB12	12	13-3/4	3-1/2
CPB14	14	15-3/4	3-1/2
CPB16-5/8	16-5/8	18-3/8	3-1/2
CPB21-1/4	21-1/4	23	3-1/2

Catalog Number	L (Nominal)	H	W (Overall)
CPT6	5-7/8	2-1/4	2-1/2
CPT8	7-7/8	3	3-1/2
CPT10	9-7/8	3-1/2	3-1/2
CPT12	11-7/8	4	3-1/2
CPT16	15-7/8	4	3-1/2

SPEC-BLOK™ catalog numbers describe exactly how the distribution block is assembled:

5	Total number of poles in the completed assembly
DR	One 'D' unit and one 'R' unit, bolted in parallel, forming each phase pole (3 phase poles)
N	Denotes the beginning of the neutral pole (where required)
DST	One 'D' unit, one 'S' unit, and one 'T' unit, bolted in parallel, forming the neutral pole
G	Denotes the beginning of the ground pole description (where required)
QP	One 'Q' unit and one 'P' unit, bolted in parallel, forming the ground pole
12	Size (inches) of the wireway or trough that is needed to enclose the assembly. If a junction box enclosure is used, no number is used to denote the size of the enclosure

5DR-NDST-GQP-12 (assembly pictured)

SPEC-BLOK™ IS A SYSTEM THAT CAN SOLVE MOST POWER DISTRIBUTION APPLICATIONS!

Blue highlighted items are industry standard and most frequently ordered.

Questionnaire
For SPEC-BLOK™ Applications

How many poles in the system? (3-wire, 4-wire, single phase, etc.)?_____ poles

Are neutral conductors (when required) different sizes (AWG/kcmil) than the phase conductors?
_____ same size _____ different size

Is a ground connection required? ☐ Yes ☐ No

What are the quantities, sizes (AWG/kcmil) and material (Al/Cu) of the incoming line conductors and outgoing load conductors?

		QUANTITY	SIZE	CONDUCTOR TYPE
PER PHASE	LINE			
	LOAD			
PER PHASE	LINE			
	LOAD			
PER PHASE	LINE			
	LOAD			

Are any conductors continuous? ☐ Yes ☐ No

If yes, which ones? _____

_____

What kind of enclosure is the connection assembly being mounted in and what are the inside space dimensions?
Wireway/trough size _____
Box, panel, cabinet, other size _____

When is a quotation required? Date _____ When is the material required? Date _____

Name of requestor _____ Job name/reference _____

Is there a preference for a particular BURNDY distributor? ☐ Yes ☐ No

If yes, please give the name, location and telephone number

Name _____ Phone_____

Address _____

_____

Questions? Call BURNDY® Technical Services at 800-451-4956.

UL LISTED POWER DISTRIBUTION BLOCKS

VERSIPOLE™

These Power Distribution Blocks are Listed to the Power Distribution Block Standard UL 1953. They contain the same features and characteristics as the non-Listed blocks however, these have spacings that are suitable for installations in most industrial control panel feeder and branch circuits, HVAC systems, and Wireways (with optional cover; sold separately). They are available in one, two, or three pole configurations. An "Adder" is also available with optional End Barrier (sold separately), to allow user customized configurations.

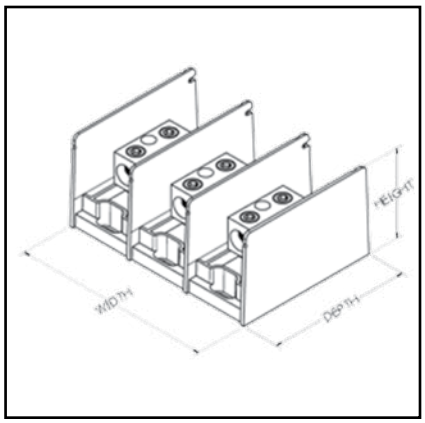

Features & Benefits

- Single or dual run connections allow the user to minimize the number of connections required
- Suitable for use with aluminum or copper conductors providing maximum versatility
- Available in 3 sizes for optimization of space
- 600V, ALCU Rated; meets or exceeds industry standard requirements
- Range taking designs to accommodate wire sizes up to 600 kcmil
- High Short-Circuit Rating up to 100kA with proper fusing
- Meets spacing requirements of Industrial Control Panel Standard UL 508A (spacing of 1" through air and 2" over surface)
- Adders and End Barriers available separately for all 3 sizes providing capability to create as many poles as required
- Hinged Covers available separately to cover 3 sizes providing user protection and easy access to connector terminal block

[1] Short-Circuit Current Rating with proper fusing

Small Series:

Catalog Number	Connector		Run	Tap	Width	Height	Depth	Ampere Rating per Pole	Number of Poles	SCCR[1]
	Number of Run(s)	Number of Tap(s)	Wire Range AL9CU	Wire Range AL9CU						
BDCSHC142/01	1	4	14-2/0	14-4	1.05	2.81	3.08	175	1	100kA
BDASHC142/01	1	4	14-2/0	14-4	0.93	2.81	3.08	175	Adder	100kA
BDCSHC112/01	1	1	14-2/0	14-2/0	1.05	2.81	3.08	175	1	100kA
BDASHC112/01	1	1	14-2/0	14-2/0	0.93	2.81	3.08	175	Adder	100kA

Small Series Hinged Cover and End Barrier:

Catalog Number	Description
BDASHCEB	End Barrier for Small Series Adder Distribution Blocks
BDBSHCCOVER	Hinged Cover for use with Small Series Distribution Blocks and Adders (use of End Barrier necessary with Adders to attach cover). Order 1 cover per pole

Blue highlighted items are industry standard and most frequently ordered.

UL LISTED POWER DISTRIBUTION BLOCKS

VERSIPOLE™

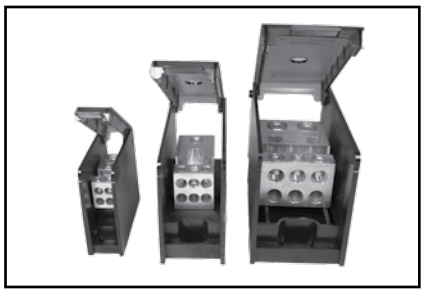

Medium Series:

Catalog Number	Connector		Run	Tap	Width	Height	Depth	Ampere Rating per Pole	Number of Poles	SCCR[1]
	Number of Run(s)	Number of Tap(s)	Wire Range AL9CU	Wire Range AL9CU						
BDBMHC162/01	1	6	14-2/0	14-2	1.85	3.25	5	175	1	100kA
BDBMHC162/02	1	6	14-2/0	14-2	3.57	3.25	5	175	2	100kA
BDBMHC162/03	1	6	14-2/0	14-2	5.28	3.25	5	175	3	100kA
BDAMHC162/0	1	6	14-2/0	14-2	1.72	3.25	5	175	Adder	100kA
BDBMHC112/01	1	1	14-2/0	14-2/0	1.85	3.25	5	175	1	100kA
BDBMHC112/02	1	1	14-2/0	14-2/0	3.57	3.25	5	175	2	100kA
BDBMHC112/03	1	1	14-2/0	14-2/0	5.28	3.25	5	175	3	100kA
BDAMHC112/0	1	1	14-2/0	14-2/0	1.72	3.25	5	175	Adder	100kA
BDBMHC113501	1	1	6-350	6-350	1.85	3.25	5	310	1	100kA
BDBMHC113502	1	1	6-350	6-350	3.57	3.25	5	310	2	100kA
BDBMHC113503	1	1	6-350	6-350	5.28	3.25	5	310	3	100kA
BDAMHC11350	1	1	6-350	6-350	1.72	3.25	5	310	Adder	100kA
BDBMHC262/01	2	6	14-2/0	14-2	1.85	3.25	5	350	1	100kA
BDBMHC262/02	2	6	14-2/0	14-2	3.57	3.25	5	350	2	100kA
BDBMHC262/03	2	6	14-2/0	14-2	5.28	3.25	5	350	3	100kA
BDAMHC262/0	2	6	14-2/0	14-2	1.72	3.25	5	350	Adder	100kA
BDBMHC222/01	2	2	14-2/0	14-2/0	1.85	3.25	5	350	1	100kA
BDBMHC222/02	2	2	14-2/0	14-2/0	3.57	3.25	5	350	2	100kA
BDBMHC222/03	2	2	14-2/0	14-2/0	5.28	3.25	5	350	3	100kA
BDAMHC222/0	2	2	14-2/0	14-2/0	1.72	3.25	5	350	Adder	100kA
BDBMHC145001	1	4	4-500	14-2/0	1.85	3.25	5	380	1	100kA
BDBMHC145002	1	4	4-500	14-2/0	3.57	3.25	5	380	2	100kA
BDBMHC145003	1	4	4-500	14-2/0	5.28	3.25	5	380	3	100kA
BDAMHC14500	1	4	4-500	14-2/0	1.72	3.25	5	380	Adder	100kA
BDBMHC1625001	1	6	4-500	14-2	1.85	3.25	5	380	1	100kA
BDBMHC1625002	1	6	4-500	14-2	3.57	3.25	5	380	2	100kA
BDBMHC1625003	1	6	4-500	14-2	5.28	3.25	5	380	3	100kA
BDAMHC162500	1	6	4-500	14-2	1.72	3.25	5	380	Adder	100kA

Medium Series Hinged Cover and End Barrier:

Catalog Number	Description
BDAMHCEB	End Barrier for Medium Series Adder Distribution Blocks
BDBMHCCOVER	Hinged Cover for use with Medium Series Distribution Blocks and Adders (use of End Barrier necessary with Adders to attach cover). Order 1 cover per pole

Blue highlighted items are industry standard and most frequently ordered.

UL LISTED POWER DISTRIBUTION BLOCKS

VERSIPOLE™

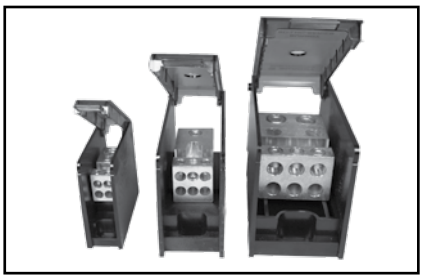

Large Series:

Catalog Number	Connector		Run	Tap	Width	Height	Depth	Ampere Rating per Pole	Number of Poles	SCCR[1]
	Number of Run(s)	Number of Tap(s)	Wire Range AL9CU	Wire Range AL9CU						
BDBLHC1123501	1	12	6-350	14-4	2.73	3.55	5.7	310	1	100kA
BDBLHC1123502	1	12	6-350	14-4	5.31	3.55	5.7	310	2	100kA
BDBLHC1123503	1	12	6-350	14-4	7.89	3.55	5.7	310	3	100kA
BDALHC112350	1	12	6-350	14-4	2.58	3.55	5.7	310	Adder	100kA
BDBLHC163501	1	6	6-350	4-2/0	2.73	3.55	5.7	310	1	100kA
BDBLHC163502	1	6	6-350	4-2/0	5.31	3.55	5.7	310	2	100kA
BDBLHC163503	1	6	6-350	4-2/0	7.89	3.55	5.7	310	3	100kA
BDALHC16350	1	6	6-350	4-2/0	2.58	3.55	5.7	310	Adder	100kA
BDBLHC115001	1	1	4-500	4-500	2.73	3.55	5.7	380	1	100kA
BDBLHC115002	1	1	4-500	4-500	5.31	3.55	5.7	380	2	100kA
BDBLHC115003	1	1	4-500	4-500	7.89	3.55	5.7	380	3	100kA
BDALHC11500	1	1	4-500	4-500	2.58	3.55	5.7	380	Adder	100kA
BDBLHC165001	1	6	4-500	4-2/0	2.73	3.55	5.7	380	1	100kA
BDBLHC165002	1	6	4-500	4-2/0	5.31	3.55	5.7	380	2	100kA
BDBLHC165003	1	6	4-500	4-2/0	7.89	3.55	5.7	380	3	100kA
BDALHC16500	1	6	4-500	4-2/0	2.58	3.55	5.7	380	Adder	100kA
BDBLHC2125001	2	12	4-500	14-4	2.73	3.55	5.7	760	1	100kA
BDBLHC2125002	2	12	4-500	14-4	5.31	3.55	5.7	760	2	100kA
BDBLHC2125003	2	12	4-500	14-4	7.89	3.55	5.7	760	3	100kA
BDALHC212500	2	12	4-500	14-4	2.58	3.55	5.7	760	Adder	100kA
BDBLHC263501	2	6	6-350	14-2/0	2.73	3.55	5.7	620	1	100kA
BDBLHC263502	2	6	6-350	14-2/0	5.31	3.55	5.7	620	2	100kA
BDBLHC263503	2	6	6-350	14-2/0	7.89	3.55	5.7	620	3	100kA
BDALHC26350	2	6	6-350	14-2/0	2.58	3.55	5.7	620	Adder	100kA
BDBLHC223501	2	2	6-350	6-350	2.73	3.55	5.7	620	1	100kA
BDBLHC223502	2	2	6-350	6-350	5.31	3.55	5.7	620	2	100kA
BDBLHC223503	2	2	6-350	6-350	7.89	3.55	5.7	620	3	100kA
BDALHC22350	2	2	6-350	6-350	2.58	3.55	5.7	620	Adder	100kA
BDBLHC225001	2	2	4-500	4-500	2.73	3.55	5.7	760	1	100kA
BDBLHC225002	2	2	4-500	4-500	5.31	3.55	5.7	760	2	100kA
BDBLHC225003	2	2	4-500	4-500	7.89	3.55	5.7	760	3	100kA
BDALHC22500	2	2	4-500	4-500	2.58	3.55	5.7	760	Adder	100kA

Blue highlighted items are industry standard and most frequently ordered.

UL LISTED POWER DISTRIBUTION BLOCKS

VERSIPOLE™

Large Series (continued):

Catalog Number	Connector		Run	Tap	Width	Height	Depth	Ampere Rating per Pole	Number of Poles	SCCR[1]
	Number of Run(s)	Number of Tap(s)	Wire Range AL9CU	Wire Range AL9CU						
BDBLHC265001	2	6	4-500	14-2/0	2.73	3.55	5.7	760	1	100kA
BDBLHC265002	2	6	4-500	14-2/0	5.31	3.55	5.7	760	2	100kA
BDBLHC265003	2	6	4-500	14-2/0	7.89	3.55	5.7	760	3	100kA
BDALHC26500	2	6	4-500	14-2/0	2.58	3.55	5.7	760	Adder	100kA
BDBLHC245001	2	4	4-500	6-4/0	2.73	3.55	5.7	760	1	100kA
BDBLHC245002	2	4	4-500	6-4/0	5.31	3.55	5.7	760	2	100kA
BDBLHC245003	2	4	4-500	6-4/0	7.89	3.55	5.7	760	3	100kA
BDALHC24500	2	4	4-500	6-4/0	2.58	3.55	5.7	760	Adder	100kA
BDBLHC226001	2	2	2-600	2-600	2.73	3.55	5.7	840	1	100kA
BDBLHC226002	2	2	2-600	2-600	5.31	3.55	5.7	840	2	100kA
BDBLHC226003	2	2	2-600	2-600	2.73	3.55	5.7	840	3	100kA
BDALHC22600	2	2	2-600	2-600	2.58	3.55	5.7	840	Adder	100kA

Large Series Hinged Cover and End Barrier:

Catalog Number	Description
BDALHCEB	End Barrier for Large Series Adder Distribution Blocks
BDBLHCCOVER	Hinged Cover for use with Large Series Distribution Blocks and Adders (use of End Barrier necessary with Adders to attach cover). Order 1 cover per pole

Blue highlighted items are industry standard and most frequently ordered.

VERSIPOLE™

POWER DISTRIBUTION BLOCKS

VERSIPOLE™ Power Distribution Blocks are designed to provide modular solutions to power distribution applications. Each connector element is made from a high conductivity aluminum alloy which is insulated with a high strength polymer housing. One, two, and three pole versions available. "Add" a pole (snap-together) blocks are also available for wire sizes up to 500 kcmil. For use with Cu or Al. 600 V, AL9CU rated.

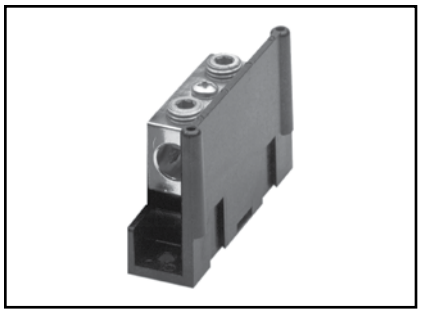

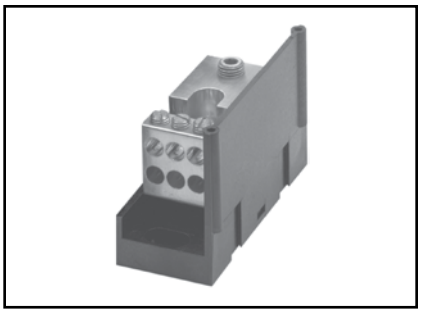

Features and Benefits

- "Add" a pole feature available
  - ◊ Provides capability to create as many poles as required
- Up to 30 tap conductors accommodated
  - ◊ Ideal for current distribution to multiple locations
- Single or dual run connections
  - ◊ Allows user to minimize the number of connectors needed to do the job
- Suitable for use with aluminum or copper conductors
  - ◊ Provides maximum versatility
- 600 V, AL9CU rated*
  - ◊ Meets or exceeds industry standard requirements
- Dead-front covers available
  - ◊ Provides user protection – one cover per pole

*** BDB-430-500-1 not CSA certified**

VERSIPOLE™ Snap-Together Blocks

Catalog Number	Connector		Run	Tap	Ampere Rating per Pole	Number of Poles
	Run	Tap	Wire Range AL9CU	Wire Range AL9CU		
BDA-112-350			AWG 6 - 350 kcmil	AWG 14 - 4	310	ADDER
BDA-16-350			AWG 6 - 350 kcmil	AWG 14 - 2/0	310	ADDER
BDA-16-500			AWG 4 - 500 kcmil	AWG 4 - 2/0	380	ADDER
BDA-26-350			AWG 6 - 350 kcmil	AWG 14 - 2/0	620	ADDER
BDA-212-500			AWG 4 - 500 kcmil	AWG 14 - 4	760	ADDER
BDA-26-500			AWG 4 - 500 kcmil	AWG 14 - 2/0	760	ADDER
BDA-24-500			AWG 4 - 500 kcmil	AWG 6 - 4/0	760	ADDER
BDA-11-500			AWG 4 - 500 kcmil	AWG 4 - 500 kcmil	380	ADDER
BDA-22-350			AWG 6 - 350 kcmil	AWG 6 - 350 kcmil	620	ADDER
BDA-22-500			AWG 4 - 500 kcmil	AWG 4 - 500 kcmil	760	ADDER

NOTES:
1. Order Optional BDB COVER1 per pole if desired.
2. Snap-together blocks can also be assembled to 1, 2, 3 pole blocks to create multi-pole distribution blocks.

Blue highlighted items are industry standard and most frequently ordered.

VERSIPOLE™

VERSIPOLE™ 1, 2, 3 Pole Distribution Blocks

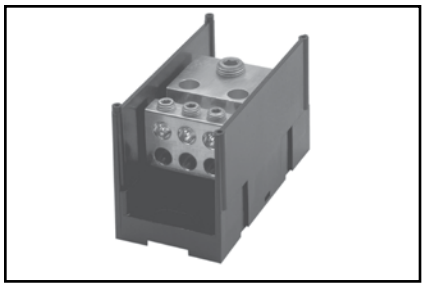

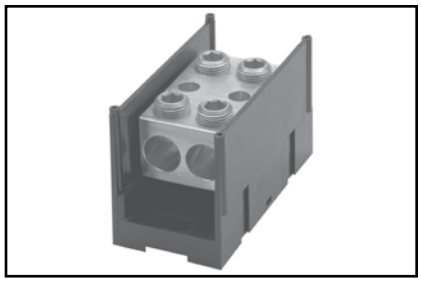

Catalog Number	Connector		Run	Tap	Ampere Rating per Pole	Number of Poles	Optional Cover Order 1 per Pole
	Run	Tap	Wire Range AL9CU	Wire Range AL9CU			
BDB-16-2/0-1 BDB-16-2/0-2 BDB-16-2/0-3			AWG 12 - 2/0	AWG 14 - 4	175	1 2 3	BDBCOVER2
BDB-26-2/0-1 BDB-26-2/0-2 BDB-26-2/0-3			AWG 14 - 2/0	AWG 14 - 2	350	1 2 3	BDBCOVER2
BDB-112-350-1 BDB-112-350-2 BDB-112-350-3			AWG 6 - 350 kcmil	AWG 14 - 4	310	1 2 3	BDBCOVER1
BDB-16-350-1 BDB-16-350-2 BDB-16-350-3			AWG 6 - 350 kcmil	AWG 14 - 2/0	310	1 2 3	BDBCOVER1
BDB-14-500-1 BDB-14-500-2 BDB-14-500-3			AWG 4 - 500 kcmil	AWG 14 - 2/0	380	1 2 3	BDBCOVER2
BDB-16-500-1 BDB-16-500-2 BDB-16-500-3			AWG 4 - 500 kcmil	AWG 14 - 2/0	380	1 2 3	BDBCOVER1
BDB-162-500-1 BDB-162-500-2 BDB-162-500-3			AWG 4 - 500 kcmil	AWG 14 - 2	380	1 2 3	BDBCOVER2
BDB-26-350-1 BDB-26-350-2 BDB-26-350-3			AWG 6 - 350 kcmil	AWG 14 - 2/0	620	1 2 3	BDBCOVER1
BDB-212-500-1 BDB-212-500-2 BDB-212-500-3			AWG 4 - 500 kcmil	AWG 14 - 4	760	1 2 3	BDBCOVER1
BDB-26-500-1 BDB-26-500-2 BDB-26-500-3			AWG 4 - 500 kcmil	AWG 14 - 2/0	760	1 2 3	BDBCOVER1
BDB-24-500-1 BDB-24-500-2 BDB-24-500-3			AWG 4 - 500 kcmil	AWG 6 - 4/0	760	1 2 3	BDBCOVER1

Blue highlighted items are industry standard and most frequently ordered.

VERSIPOLE™

VERSIPOLE™ 1, 2, 3 Splice/Reducer Blocks

Catalog Number	Connector		Run	Tap	Ampere Rating per Pole	Number of Poles	Optional Cover Order 1 per Pole
	Run	Tap	Wire Range AL9CU	Wire Range AL9CU			
BDB-11-2/0-1 BDB-11-2/0-2 BDB-11-2/0-3			AWG 14 - 2/0	AWG 14 - 2/0	175	1 2 3	BDBCOVER2
BDB-11-350-1 BDB-11-350-2 BDB-11-350-3			AWG 6 - 350 kcmil	AWG 6 - 350 kcmil	310	1 2 3	BDBCOVER2
BDB-11-500-1 BDB-11-500-2 BDB-11-500-3			AWG 6 - 500 kcmil	AWG 6 - 500 kcmil	380	1 2 3	BDBCOVER1
BDB-22-2/0-1 BDB-22-2/0-2 BDB-22-2/0-3			AWG 14 - 2/0	AWG 14 - 2/0	350	1 2 3	BDBCOVER2
BDB-22-350-1 BDB-22-350-2 BDB-22-350-3			AWG 6 - 350 kcmil	AWG 6 - 350 kcmil	620	1 2 3	BDBCOVER1
BDB-22-500-1 BDB-22-500-2 BDB-22-500-3			AWG 4 - 500 kcmil	AWG 4 - 500 kcmil	760	1 2 3	BDBCOVER1

SNAP TOGETHER SPLICE/REDUCER BLOCKS

Catalog Number	Connector		Run	Tap	Ampere Rating per Pole	Number of Poles	Optional Cover Order 1 per Pole
	Run	Tap	Wire Range AL9CU	Wire Range AL9CU			
BDC-14-2/0-1			AWG 14 - 2/0	AWG 14 - 4	175	1	BDBCOVER3
BDA-14-2/0-1			AWG 14 - 2/0	AWG 14 - 4	175	ADDER	BDBCOVER3
BDC-11-2/0-1			AWG 14 - 2/0	AWG 14 - 2/0	175	1	BDBCOVER3
BDA-11-2/0-1			AWG 14 - 2/0	AWG 14 - 2/0	175	ADDER	BDBCOVER3

Blue highlighted items are industry standard and most frequently ordered.

VERSIPOLE™
(Continued)

VERSIPOLE™ 1, 2, 3 Splice/Reducer Blocks

These tables and illustrations refer to the specific VERSIPOLE™ Power Distribution Blocks listed.

The Figure to the Lower Right is Applicable to the Following:			
Catalog Number	**Number of Poles**	**Catalog Number**	**Number of Poles**
BDA-11-500	1 (adder)	BDB-16-500-3	3
BDA-112-350	1 (adder)	BDB-212-500-1	1
BDA-16-350	1 (adder)	BDB-212-500-2	2
BDA-16-500	1 (adder)	BDB-212-500-3	3
BDA-212-500	1 (adder)	BDB-22-350-1	1
BDA-22-350	1 (adder)	BDB-22-350-2	2
BDA-22-500	1 (adder)	BDB-22-350-3	3
BDA-24-500	1 (adder)	BDB-22-500-1	1
BDA-26-350	1 (adder)	BDB-22-500-2	2
BDA-26-500	1 (adder)	BDB-22-500-3	3
BDB-11-500-1	1	BDB-24-500-1	1
BDB-11-500-2	2	BDB-24-500-2	2
BDB-11-500-3	3	BDB-24-500-3	3
BDB-112-350-1	1	BDB-26-350-1	1
BDB-112-350-2	2	BDB-26-350-2	2
BDB-112-350-3	3	BDB-26-350-3	3
BDB-16-350-1	1	BDB-26-500-1	1
BDB-16-350-2	2	BDB-26-500-2	2
BDB-16-350-3	3	BDB-26-500-3	3
BDB-16-500-1	1	BDB-430-500-1*	1
BDB-16-500-2	2		

*** BDB-430-500-1 not CSA certified**

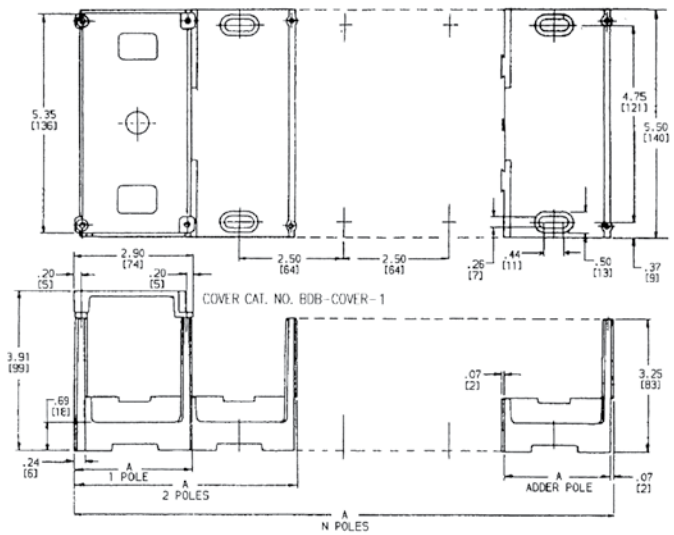

No. of Poles	Dimensions A Inches
Adder	2.50
1	2.81
2	5.31
3	7.81
N	(2.50 X N) + 0.31

Example for 10 poles:
A = (2.50 X 10) + 0.31 = 25

Blue highlighted items are industry standard and most frequently ordered.

VERSIPOLE™
(Continued)

VERSIPOLE™ 1, 2, 3 Splice/Reducer Blocks

These tables and illustrations refer to the specific VERSIPOLE™ Power Distribution Blocks listed.

The Figure to the Lower Right is Applicable to the Following:	
Catalog Number	**Number of Poles**
BDB-11-2/0-1	1
BDB-11-2/0-2	2
BDB-11-2/0-3	3
BDB-11-350-1	1
BDB-11-350-2	2
BDB-11-350-3	3
BDB-14-500-1	1
BDB-14-500-2	2
BDB-14-500-3	3
BDB-16-2/0-1	1
BDB-16-2/0-2	2
BDB-16-2/0-3	3
BDB-162-500-1	1
BDB-162-500-2	2
BDB-162-500-3	3
BDB-22-2/0-1	1
BDB-22-2/0-2	2
BDB-22-2/0-3	3
BDB-26-2/0-1	1
BDB-26-2/0-2	2
BDB-26-2/0-3	3

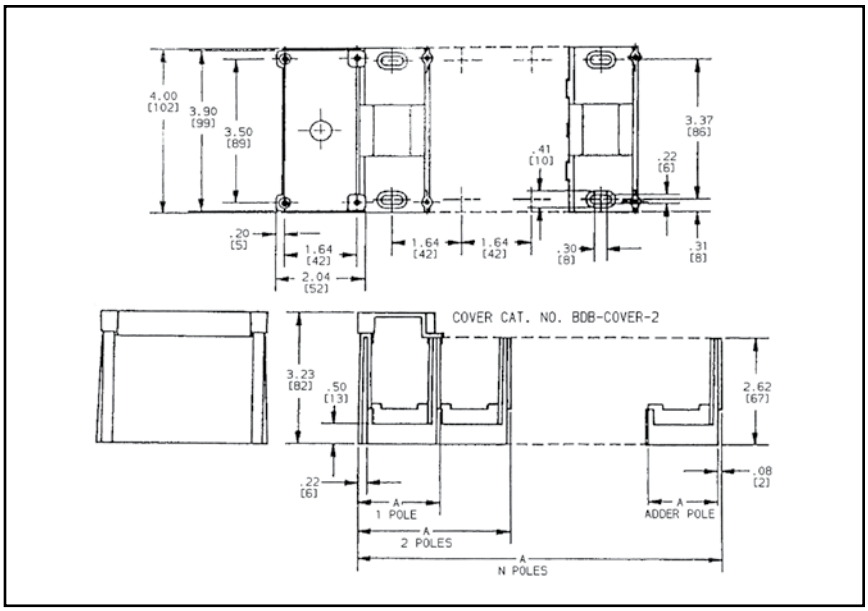

No. of Poles	Dimensions A Inches
Adder	1.64
1	1.94
2	3.57
3	5.20
N	(1.64 X N) + 0.30

Example for 10 poles:
A = (1.64 X 10) + 0.30 = 16.20

Applicable VERSI-POLE™ Items	
Catalog Number	**Number of Poles**
BDA-14-2/0-1	1 (adder)
BDC-14-2/0-1	1
BDA-11-2/0-1	1 (adder)
BDC-11-2/0-1	1

No. of Poles	Dimensions A Inches
Adder	0.81
1	1.08
2	1.89
3	2.70
N	(0.81 X N) + 0.27

Example for 10 poles:
A = (.81 X 10) + 0.30 = 8.37

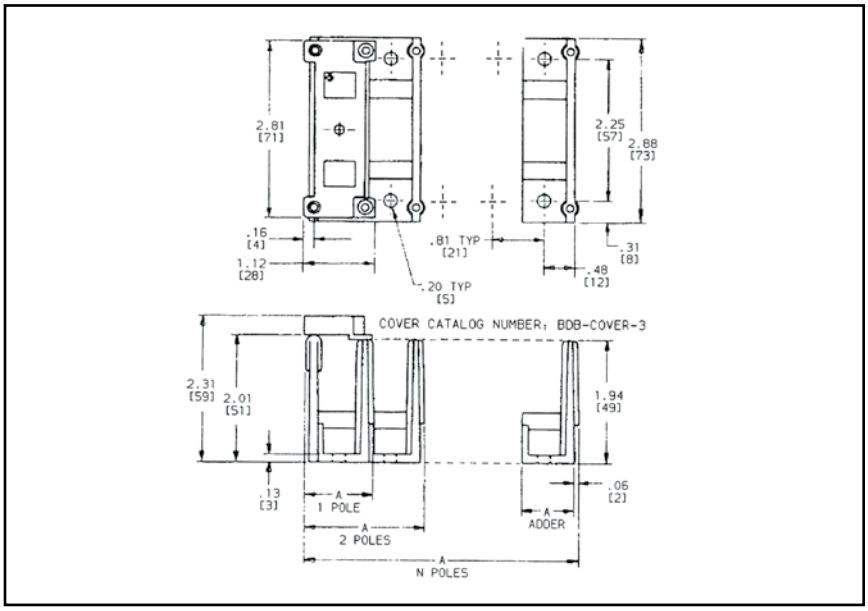

Blue highlighted items are industry standard and most frequently ordered.

TYPES BIT, BITO, BISR

UNITAP™

Clear Insulated Multiple Tap Connectors

Tap connections and in-line splice/reductions are made quickly and easily with the UNITAP™ line of connectors. UL486B Listed. Dual-rated AL9CU for any stranded copper or stranded aluminum applications. 600 Volt, 90° C.

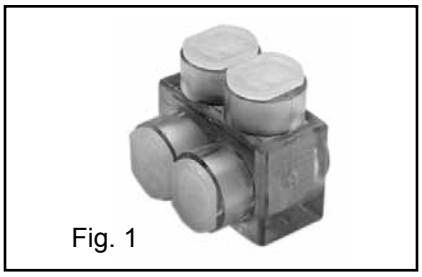
Fig. 1

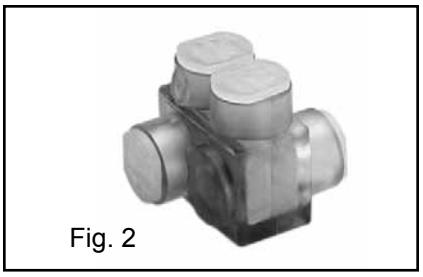
Fig. 2

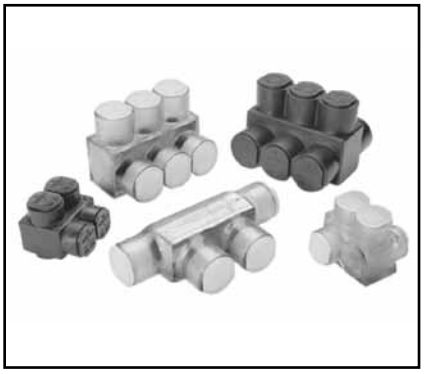

Features & Benefits

- Clear Plastisol covered AL6061-T6 aluminum body
  - ◊ Saves time, lowers installation costs, eliminates taping.
- Clear Plastisol
  - ◊ Allows visual confirmation that conductor is properly inserted.
- Oxide inhibitor pre-installed
  - ◊ Inhibits moisture and contaminants from entering the contact area.
- Range-taking
  - ◊ Reduces number of connectors carried in inventory.

2 Port, 1 or 2 Sided Entry

Catalog Number	# of Ports	Wire Range (AWG/kcmil)	L	W	H	Hex Key	Figure Number
BIT4	2	14 AWG-4 AWG	1.16	1.16	1.25	1/8	1
BITO4	2			1.50			2
BIT2/0	2	14 AWG-2/0 AWG	1.52	1.40	1.38	3/16	1
BITO2/0	2			1.56			2
BIT250	2	10 AWG-250 kcmil	2.03	2.07	2.13		1
BITO250	2			2.64		5/16	2
BIT350	2	10 AWG-350 kcmil	2.22	2.32	2.50	3/16	1
BITO350	2			3.00		5/16	2
BIT600	2	4 AWG-600 kcmil	2.72	2.38	2.75	3/16	1
BITO600	2			3.00		3/8	2
BIT750 *	2	2 AWG-750 kcmil	2.87	2.70	3.00	3/16	1
BITO750 *	2			3.38		3/8	2

* BIT750 and BITO750 are not UL Listed. UNITAP™ rated for code conductor only.

In-Line Splicer/Reducer

Catalog Number	Wire Range (AWG/kcmil)	L	W	H	Hex Key
BISR2	#14-2	2.38	0.75	1.22	5/32
BISR1/0	#14-1/0	2.91	0.91	1.38	3/16
BISR250	#10-250	4.01	1.19	2.10	5/16
BISR350	#10-350	4.63	1.34	2.35	5/16
BISR500	#6-500	5.00	1.62	2.62	3/8

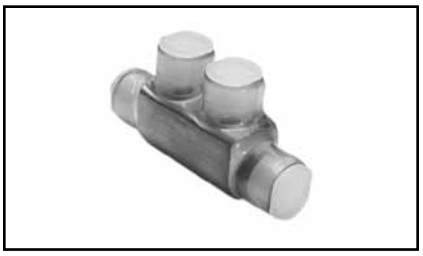

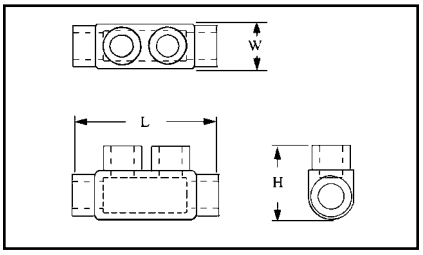

Blue highlighted items are industry standard and most frequently ordered.

TYPE BIBS

UNITAP™

Clear Insulated Multiple Tap Connectors

Tap connections and in-line splice/reductions are made quickly and easily with the UNITAP™ line of connectors. UL486B Listed. Dual-rated AL9CU for any stranded copper or stranded aluminum applications. 600 Volt, 90° C.

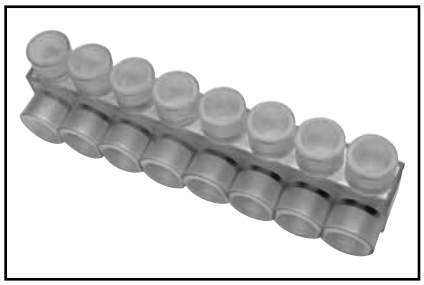

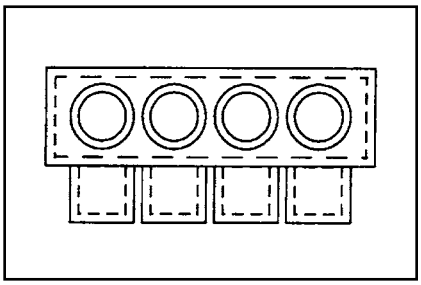

Features & Benefits

- Clear Plastisol covered AL6061-T6 aluminum body
  - ◊ Saves time, lowers installation costs, eliminates taping
- Clear Plastisol
  - ◊ Allows visual confirmation that conductor is properly inserted
- Oxide inhibitor pre-installed
  - ◊ Inhibits moisture and contaminants from entering the contact area
- Range-taking
  - ◊ Reduces number of connectors carried in inventory

MULTI-PORT
Single-Sided Entry

Catalog Number	# of Ports	Wire Range (AWG/kcmil)	L	W	H	Hex Key
BIBS4-3	3	14 AWG-4 AWG	1.51	1.25	1.25	1/8
BIBS4-4	4	14 AWG-4 AWG	1.95	1.25	1.25	1/8
BIBS4-5	5	14 AWG-4 AWG	2.39	1.25	1.25	1/8
BIBS4-6	6	14 AWG-4 AWG	2.83	1.25	1.25	1/8
BIBS4-8	8	14 AWG-4 AWG	3.71	1.25	1.25	1/8
BIBS2/0-3	3	14 AWG-2/0 Str	2.19	1.31	1.38	3/16
BIBS2/0-4	4	14 AWG-2/0 Str	2.86	1.31	1.38	3/16
BIBS2/0-5	5	14 AWG-2/0 Str	3.53	1.31	1.38	3/16
BIBS2/0-6	6	14 AWG-2/0 Str	4.20	1.31	1.38	3/16
BIBS2/0-8	8	14 AWG-2/0 Str	5.55	1.31	1.38	3/16
BIBS2/0-10	10	14 AWG-2/0 Str	6.89	1.31	1.38	3/16
BIBS2/0-12	12	14 AWG-2/0 Str	8.24	1.31	1.38	3/16
BIBS2/0-14	14	14 AWG-2/0 Str	9.58	1.31	1.38	3/16
BIBS250-3	3	10 AWG-250 kcmil	2.97	2.07	2.13	5/16
BIBS250-4	4	10 AWG-250 kcmil	3.91	2.07	2.13	5/16
BIBS250-5	5	10 AWG-250 kcmil	4.84	2.07	2.13	5/16
BIBS250-6	6	10 AWG-250 kcmil	5.78	2.07	2.13	5/16
BIBS250-8	8	10 AWG-250 kcmil	7.66	2.07	2.13	5/16
BIBS250-10	10	10 AWG-250 kcmil	9.53	2.07	2.13	5/16
BIBS250-12	12	10 AWG-250 kcmil	11.41	2.07	2.13	5/16
BIBS250-14	14	10 AWG-250 kcmil	13.29	2.07	2.13	5/16
BIBS350-3	3	10 AWG-350 kcmil	3.13	2.32	2.50	5/16
BIBS350-4	4	10 AWG-350 kcmil	4.04	2.32	2.50	5/16
BIBS350-5	5	10 AWG-350 kcmil	4.95	2.32	2.50	5/16
BIBS350-6	6	10 AWG-350 kcmil	5.86	2.32	2.50	5/16
BIBS350-8	8	10 AWG-350 kcmil	7.68	2.32	2.50	5/16
BIBS350-10	10	10 AWG-350 kcmil	9.50	2.32	2.50	5/16

Catalog Number	# of Ports	Wire Range (AWG/kcmil)	L	W	H	Hex Key
BIBS350-12	12	10 AWG-350 kcmil	11.32	2.32	2.50	5/16
BIBS350-14	14	10 AWG-350 kcmil	13.14	2.32	2.50	5/16
BIBS600-3	3	4 AWG-600 kcmil	4.00	2.38	2.75	3/8
BIBS600-4	4	4 AWG-600 kcmil	5.28	2.38	2.75	3/8
BIBS600-5	5	4 AWG-600 kcmil	6.56	2.38	2.75	3/8
BIBS600-6	6	4 AWG-600 kcmil	7.84	2.38	2.75	3/8
BIBS600-8	8	4 AWG-600 kcmil	10.41	2.38	2.75	3/8
BIBS600-10	10	4 AWG-600 kcmil	12.97	2.38	2.75	3/8
BIBS600-12	12	4 AWG-600 kcmil	15.53	2.38	2.75	3/8
BIBS600-14	14	4 AWG-600 kcmil	18.09	2.38	2.75	3/8
BIBS750-3*	3	2 AWG-750 kcmil	4.00	2.70	3.00	3/8
BIBS750-4*	4	2 AWG-750 kcmil	5.38	2.70	3.00	3/8
BIBS750-6*	6	2 AWG-750 kcmil	8.13	2.70	3.00	3/8
BIBS750-8*	8	2 AWG-750 kcmil	10.88	2.70	3.00	3/8
BIBS750-10*	10	2 AWG-750 kcmil	13.63	2.70	3.00	3/8
BIBS750-12*	12	2 AWG-750 kcmil	16.38	2.70	3.00	3/8
BIBS750-14*	14	2 AWG-750 kcmil	19.13	2.70	3.00	3/8

NOTE: Only 1 conductor per port allowed.
* Not UL Listed.
UNITAP™ rated for code conductor only.

Blue highlighted items are industry standard and most frequently ordered.

TYPE BIBD

UNITAP™

Clear Insulated Multiple Tap Connectors

Tap connections and in-line splice/reductions are made quickly and easily with the UNITAP™ line of connectors. UL486B Listed. Dual-rated AL9CU for any stranded copper or stranded aluminum applications. 600 Volt, 90° C.

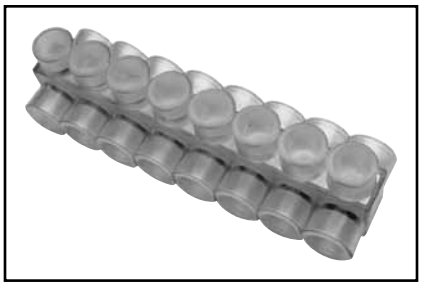

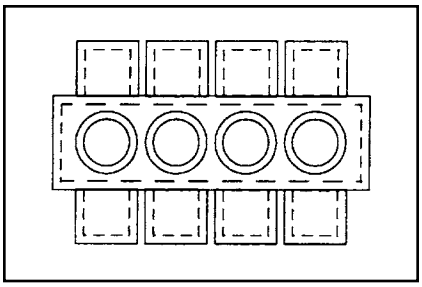

Features & Benefits

- Clear Plastisol covered AL6061-T6 aluminum body
  - ◊ Saves time, lowers installation costs, eliminates taping
- Clear Plastisol
  - ◊ Allows visual confirmation that conductor is properly inserted
- Oxide inhibitor pre-installed
  - ◊ Inhibits moisture and contaminants from entering the contact area
- Range-taking
  - ◊ Reduces number of connectors carried in inventory

MULTI-PORT
Double-Sided Entry

Catalog Number	# of Ports	Wire Range (AWG/kcmil)	W	L	H	Hex Key
BIBD4-2	2	14 AWG-4 Str	1.50	1.08	1.25	1/8
BIBD4-3	3	14 AWG-4 Str	1.50	1.51	1.25	1/8
BIBD4-4	4	14 AWG-4 str	1.50	1.95	1.25	1/8
BIBD4-5	5	14 AWG-4 Str	1.50	2.39	1.25	1/8
BIBD4-6	6	14 AWG-4 Str	1.50	2.83	1.25	1/8
BIBD4-8	8	14 AWG-4 str	1.50	3.71	1.25	1/8
BIBD2/0-2	2	14 AWG-2/0 Str	1.56	1.52	1.38	3/16
BIBD2/0-3	3	14 AWG-2/0 Str	1.56	2.19	1.38	3/16
BIBD2/0-4	4	#14-2/0 Str	1.56	2.86	1.38	3/16
BIBD2/0-5	5	#14-2/0 Str	1.56	3.53	1.38	3/16
BIBD2/0-6	6	14 AWG-2/0 Str	1.56	4.20	1.38	3/16
BIBD2/0-8	8	14 AWG-2/0 Str	1.56	5.55	1.38	3/16
BIBD2/0-10	10	14 AWG-2/0 Str	1.56	6.89	1.38	3/16
BIBD2/0-12	12	14 AWG-2/0 Str	1.56	8.24	1.38	3/16
BIBD2/0-14	14	14 AWG-2/0 Str	1.56	9.58	1.38	3/16
BIBD250-2	2	10 AWG-250 kcmil	2.64	2.03	2.13	5/16
BIBD250-3	3	10 AWG-250 kcmil	2.64	2.97	2.13	5/16
BIBD250-4	4	10 AWG-250 kcmil	2.64	3.91	2.13	5/16
BIBD250-5	5	10 AWG-250 kcmil	2.64	4.84	2.13	5/16
BIBD250-6	6	10 AWG-250 kcmil	2.64	5.78	2.13	5/16
BIBD250-8	8	10 AWG-250 kcmil	2.64	7.66	2.13	5/16
BIBD250-10	10	10 AWG-250 kcmil	2.64	9.53	2.13	5/16
BIBD250-12	12	10 AWG-250 kcmil	2.64	11.41	2.13	5/16
BIBD250-14	14	10 AWG-250 kcmil	2.64	13.29	2.13	5/16
BIBD350-2	2	10 AWG-350 kcmil	3.00	2.22	2.50	5/16
BIBD350-3	3	10 AWG-350 kcmil	3.00	3.13	2.50	5/16

Catalog Number	# of Ports	Wire Range (AWG/kcmil)	W	L	H	Hex Key
BIBD350-4	4	10 AWG-350 kcmil	3.00	4.04	2.50	5/16
BIBD350-5	5	10 AWG-350 kcmil	3.00	4.95	2.50	5/16
BIBD350-6	6	10 AWG-350 kcmil	3.00	5.86	2.50	5/16
BIBD350-8	8	10 AWG-350 kcmil	3.00	7.68	2.50	5/16
BIBD350-10	10	10 AWG-350 kcmil	3.00	9.50	2.50	5/16
BIBD350-12	12	10 AWG-350 kcmil	3.00	11.32	2.50	5/16
BIBD350-14	14	10 AWG-350 kcmil	3.00	13.14	2.50	5/16
BIBD600-2	2	4 AWG-600 kcmil	3.00	2.56	2.75	3/8
BIBD600-3	3	4 AWG-600 kcmil	3.00	3.77	2.75	3/8
BIBD600-4	4	4 AWG-600 kcmil	3.00	4.97	2.75	3/8
BIBD600-5	5	4 AWG-600 kcmil	3.00	6.17	2.75	3/8
BIBD600-6	6	4 AWG-600 kcmil	3.00	7.37	2.75	3/8
BIBD600-8	8	4 AWG-600 kcmil	3.00	9.78	2.75	3/8
BIBD600-10	10	4 AWG-600 kcmil	3.00	12.97	2.75	3/8
BIBD600-12	12	4 AWG-600 kcmil	3.00	15.53	2.75	3/8
BIBD600-14	14	4 AWG-600 kcmil	3.00	18.09	2.75	3/8
BIBD750-2*	2	2 AWG-750 kcmil	3.38	2.87	3.00	3/8
BIBD750-3*	3	2 AWG-750 kcmil	3.38	4.25	3.00	3/8
BIBD750-4*	4	2 AWG-750 kcmil	3.38	5.63	3.00	3/8
BIBD750-6*	6	2 AWG-750 kcmil	3.38	8.37	3.00	3/8
BIBD750-8*	8	2 AWG-750 kcmil	3.38	11.13	3.00	3/8
BIBD750-10*	10	2 AWG-750 kcmil	3.38	13.87	3.00	3/8
BIBD750-12*	12	2 AWG-750 kcmil	3.38	16.63	3.00	3/8
BIBD750-14*	14	2 AWG-750 kcmil	3.38	19.37	3.00	3/8

NOTE: Only 1 conductor per port allowed.
* Not UL Listed.
UNITAP™ rated for code conductor only.

Blue highlighted items are industry standard and most frequently ordered.

TYPE BIBS-MT, BIBD-MT

UNITAP™

Clear Insulated Multiple Tap Connectors Mounting Version

The BIBS-MT and BIBD-MT series UNITAP™ offer the same multi-port capabilities as the standard UNITAP™ connectors except these -MT types are provided with two isolated mounting holes at both ends of the connector for direct mounting to a trough, gutter or wireway. They will accommodate up to standard 1/4" hardware.

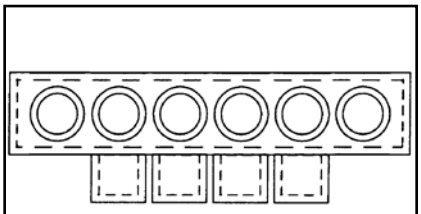

Fig. 1

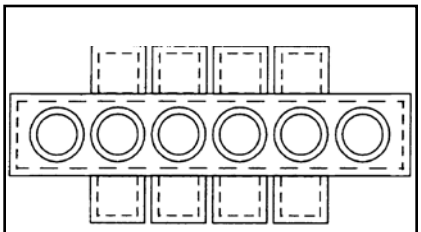

Fig. 2

MULTI-PORT Single-Sided Entry

Catalog Number	Fig. #	# of Ports	Wire Range (AWG/kcmil)	L	W	H	Hex Key
BIBS2/04MT	1	4	#14 -2/0 Str	4.20	1.25	1.50	3/16
BIBS2/06MT	1	6	#14 -2/0 Str	5.54	1.25	1.50	3/16
BIBS2/08MT	1	8	14 AWG-2/0 Str	6.89	1.25	1.50	3/16
BIBS2/010MT	1	10	14 AWG-2/0 Str	8.23	1.25	1.50	3/16
BIBS2/012MT	1	12	14 AWG-2/0 Str	9.58	1.25	1.50	3/16
BIBS2504MT	1	4	10 AWG-250 kcmil	5.78	1.95	2.63	5/16
BIBS2506MT	1	6	10 AWG-250 kcmil	7.65	1.95	2.63	5/16
BIBS2508MT	1	8	10 AWG-250 kcmil	9.53	1.95	2.63	5/16
BIBS25010MT	1	10	10 AWG-250 kcmil	11.41	1.95	2.63	5/16
BIBS25012MT	1	12	10 AWG-250 kcmil	13.28	1.95	2.63	5/16
BIBS3504MT	1	4	10 AWG-350 kcmil	5.86	2.19	2.63	5/16
BIBS3506MT	1	6	10 AWG-350 kcmil	7.68	2.19	2.63	5/16
BIBS3508MT	1	8	10 AWG-350 kcmil	9.50	2.19	2.63	5/16
BIBS35010MT	1	10	10 AWG-350 kcmil	11.32	2.19	2.63	5/16
BIBS35012MT	1	12	10 AWG-350 kcmil	13.41	2.19	2.63	5/16
BIBS6004MT	1	4	4 AWG-600 kcmil	7.84	2.25	2.88	3/8
BIBS6006MT	1	6	4 AWG-600 kcmil	10.41	2.25	2.88	3/8
BIBS6008MT	1	8	4 AWG-600 kcmil	12.97	2.25	2.88	3/8
BIBS60010MT	1	10	4 AWG-600 kcmil	15.53	2.25	2.88	3/8
BIBS60012MT	1	12	4 AWG-600 kcmil	18.09	2.25	2.88	3/8

UNITAP™ rated for code conductor only.

MULTI-PORT Double-Sided Entry

Catalog Number	Fig. #	# of Ports	Wire Range (AWG/kcmil)	L	W	H	Hex Key
BIBD2/04MT	2	4	14 AWG-2/0 AWG	4.20	1.56	1.50	3/16
BIBD2/06MT	2	6	14 AWG-2/0 AWG	5.54	1.56	1.50	3/16
BIBD2/08MT	2	8	14 AWG-2/0 AWG	6.89	1.56	1.50	3/16
BIBD2/010MT	2	10	14 AWG-2/0 AWG	8.23	1.56	1.50	3/16
BIBD2/012MT	2	12	14 AWG-2/0 AWG	9.58	1.56	1.50	3/16
BIBD2504MT	2	4	10 AWG-250 kcmil	5.78	2.64	2.26	5/16
BIBD2506MT	2	6	10 AWG-250 kcmil	7.65	2.64	2.26	5/16
BIBD2508MT	2	8	10 AWG-250 kcmil	9.53	2.64	2.26	5/16
BIBD25010MT	2	10	10 AWG-250 kcmil	11.41	2.64	2.26	5/16
BIBD25012MT	2	12	10 AWG-250 kcmil	13.28	2.64	2.26	5/16
BIBD3504MT	2	4	10 AWG-350 kcmil	5.86	3.00	2.63	5/16
BIBD3506MT	2	6	10 AWG-350 kcmil	7.68	3.00	2.63	5/16
BIBD3508MT	2	8	10 AWG-350 kcmil	9.50	3.00	2.63	5/16
BIBD35010MT	2	10	10 AWG-350 kcmil	11.32	3.00	2.63	5/16
BIBD35012MT	2	12	10 AWG-350 kcmil	13.41	3.00	2.63	5/16
BIBD6004MT	2	4	4 AWG-600 kcmil	7.84	3.00	2.88	3/8
BIBD6006MT	2	6	4 AWG-600 kcmil	10.41	3.00	2.88	3/8
BIBD6008MT	2	8	4 AWG-600 kcmil	12.97	3.00	2.88	3/8
BIBD60010MT	2	10	4 AWG-600 kcmil	15.53	3.00	2.88	3/8
BIBD60012MT	2	12	4 AWG-600 kcmil	18.09	3.00	2.88	3/8

UNITAP™ rated for code conductor only.

Blue highlighted items are industry standard and most frequently ordered.

UV RATED BLACK UNITAP™

UNITAP™

600V, 90°C

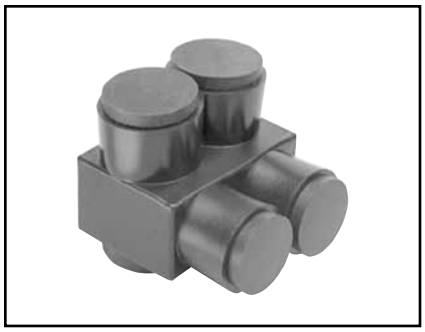

Features & Benefits

- UV Rated Plastisol covered AL6061-T6 aluminum body saves time by eliminating the need for taping.
- Oxide inhibitor pre-installed inhibits moisture and contaminants from entering the contact area.
- Range-taking capability reduces the number of connectors carried in inventory.
- UL486B Listed, AL9CU, 600V 90°C.

Catalog Number	# of Ports	Wire Range (AWG/kcmil)	L	W	H	Hex Key	Torque
1PL42	2	14 AWG-4 AWG	1.08	1.16	1.25	1/8	45
1PLO42	2	14 AWG-4 AWG	1.08	1.50	1.25	1/8	45
1PL2/02	2	14 AWG-2/0 AWG	1.52	1.40	1.38	3/16	120
1PLO2/02	2	14 AWG-2/0 AWG	1.52	1.56	1.38	3/16	120
1PL2502	2	10 AWG-250 kcmil	2.03	2.07	2.13	5/16	275
1PLO2502	2	10 AWG-250 kcmil	2.03	2.64	2.13	5/16	275
1PL3502	2	10 AWG-350 kcmil	2.22	2.32	2.50	5/16	275
1PLO3502	2	#10-350 kcmil	2.22	3.00	2.50	5/16	275
1PL6002	2	10 AWG-600 kcmil	2.72	2.38	2.75	3/8	375
1PLO6002	2	4 AWG-600 kcmil	2.72	3.00	2.75	3/8	375
1PBS2	2	14 AWG-2 AWG	2.38	0.75	1.22	5/32	45
1PBS1/0	2	14 AWG-1/0	2.91	0.91	1.38	3/16	120
1PBS250	2	10 AWG-250 kcmil	4.01	1.19	2.10	5/16	120
1PBS350	2	10 AWG-350 kcmil	4.63	1.34	2.35	1/3	275
1PBS500	2	6 AWG-500 kcmil	5.00	1.62	2.62	3/8	375
1PL43	3	14 AWG-4 AWG	1.51	1.25	1.25	1/8	45
1PL44	4	14 AWG-4 AWG	1.95	1.25	1.25	1/8	45
1PL2/03	3	14 AWG-2/0 AWG	2.19	1.31	1.38	3/16	120
1PL2503	3	10 AWG-250 kcmil	2.97	2.07	2.13	1/3	275
1PLD43	3	14 AWG-4 AWG	1.51	1.50	1.25	1/8	45
1PLD44	4	14 AWG-4 AWG	1.95	1.50	1.25	1/8	45
1PLD2/02	2	14 AWG-2/0 AWG	1.52	1.56	1.38	1/5	120
1PLD2/03	3	14 AWG-2/0 AWG	2.19	1.56	1.38	3/16	120
1PLD2/04	4	14 AWG-2/0 AWG	2.86	1.56	1.38	3/16	120
1PLD2/06	6	14 AWG-2/0 AWG	4.20	1.56	1.38	3/16	120
1PLD2502	2	10 AWG-250 kcmil	2.03	2.64	2.13	5/16	275
1PLD2503	3	10 AWG-250 kcmil	2.97	2.64	2.13	5/16	275
1PLD2504	4	10 AWG-250 kcmil	3.91	2.64	2.13	5/16	275
1PLD2506	6	10 AWG-250 kcmil	5.78	2.64	2.13	5/16	275
1PLD3502	2	10 AWG-350 kcmil	2.22	3.00	2.50	5/16	375
1PLD3503	3	10 AWG-350 kcmil	3.13	3.00	2.50	5/16	375
1PLD3504	4	10 AWG-350 kcmil	4.04	3.00	2.50	5/16	375
1PLD3506	6	10 AWG-350 kcmil	5.86	3.00	2.50	5/16	375
1PLD3508	8	10 AWG-350 kcmil	7.68	3.00	2.50	5/16	375
1PLD6002	2	4 AWG-600 kcmil	2.72	3.00	2.75	3/8	375
1PLD6003	3	4 AWG-600 kcmil	4.00	3.00	2.75	3/8	375
1PLD6004	4	4 AWG-600 kcmil	5.28	3.00	2.75	3/8	375
1PLD6005	5	4 AWG-600 kcmil	6.56	3.00	2.75	3/8	375
1PLD6006	6	4 AWG-600 kcmil	7.84	3.00	2.75	3/8	375
1PLD6008	8	4 AWG-600 kcmil	10.40	3.00	2.75	3/8	375

1PL = 2 Port Single Sided Entry
1PLO = 2 Port Offset Entry
1PBS = In-line Splice/Reducer
1PL = Multi-Port Single Sided Entry
1PLD = Multi-Port Double Sided Entry
UNITAP™ rated for code conductor only.

Blue highlighted items are industry standard and most frequently ordered.

TYPE BWTE

WALL-MOUNTED TERMINATION ENCLOSURES

These are three-phase, NEMA 3R (rain-proof), 600 Volt Rated wall mounted termination enclosures.

AL9CU

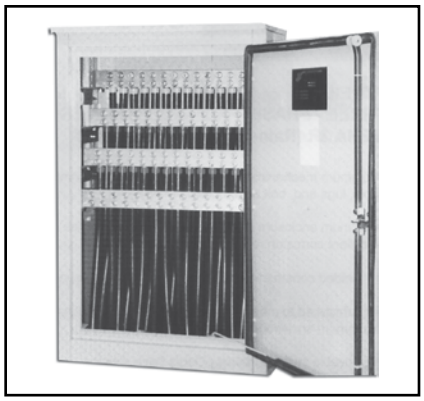

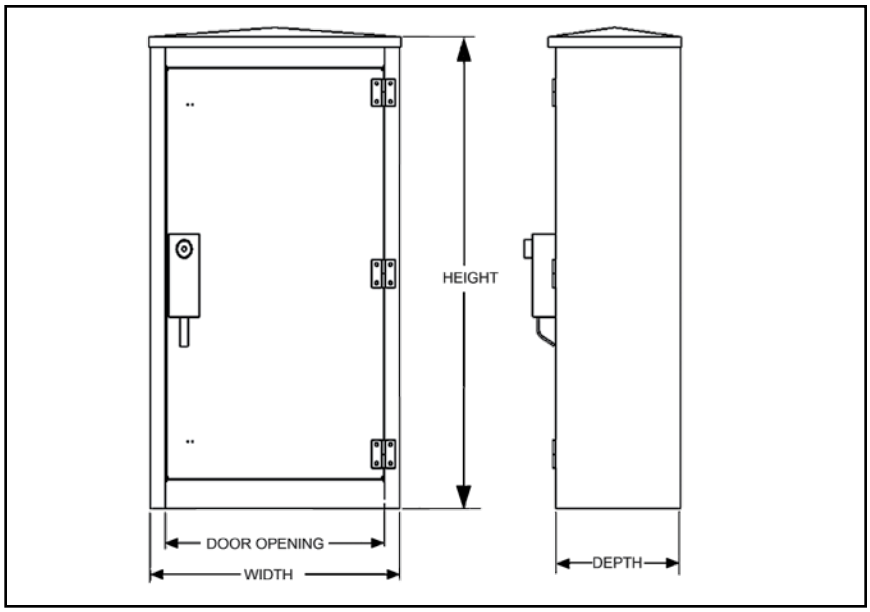

Features and Benefits

- Aluminum mechanical bar connectors eliminates need for compressions tools, lugs, and bolt assemblies
- Aluminum enclosure is lightweight, low maintenance and has excellent corrosion resistance
- Ample working space, allowing for easier termination with a removeable swinging door
- All-welded construction: welds and seams are ground smooth
- Manufactured to meet or exceed ANSI C57-12.28 for wall-mounted equipment enclosure integrity
- Three-point positive latch mechanism (secured and operated by a half-turn, captive and recessed penta-head bolt) and shielded padlock shackle
- Finish meets or exceeds proposed EEI paint specification
- Finish is gray, oven cured powder coat
- All mounting hardware is 18-8 stainless steel

Catalog Number	Conductor Range (AWG)	Number of Conductors per phase	Dimensions				UL Listed Amp Rating	
			W	D	H	Door Opening	Copper	Aluminum
BWTE21-500	10 - 500 kcmil	21	32.00	16.00	51.00	28.00	3800	3100
BWTE21-750	2 - 750 kcmil	14	32.00	16.00	51.00	28.00	3325	2695
BWTE21-1000	1/0 - 1000 kcmil	14	32.00	16.00	51.00	28.00	3815	3115

Blue highlighted items are industry standard and most frequently ordered.

TYPE BPTE

PAD-MOUNTED TERMINATION ENCLOSURES

These are three-phase, NEMA 3R (rain-proof), 600 Volt Rated pad mounted termination enclosures.

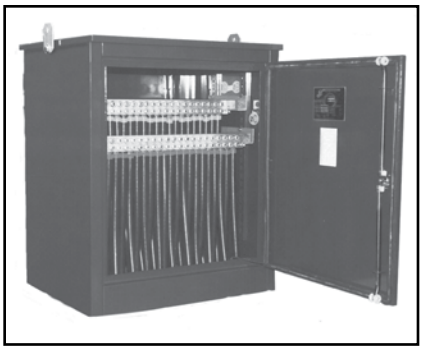

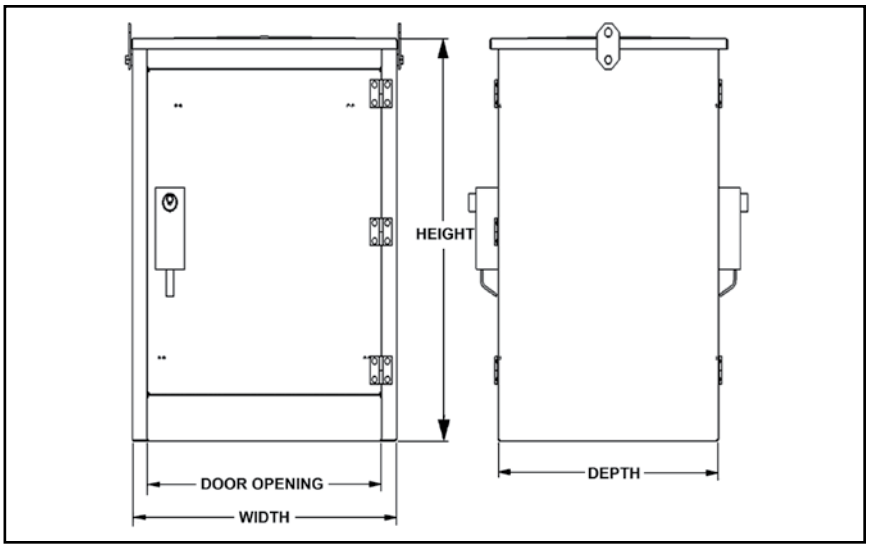

Features and Benefits

- Aluminum mechanical bar connectors eliminates need for compressions tools, lugs and bolt assemblies
- Aluminum enclosure is lightweight, low maintenance and has excellent corrosion resistance
- Ample working space, allowing for easier termination with a removeable swinging door
- All-welded construction: welds and seams are ground smooth
- Manufactured to meet or exceed ANSI C57-12.28 for wall-mounted equipment enclosure integrity
- Removable swinging doors - doors have stainless steel lift off hinges with stainless steel three point locking handles and recessed stainless steel penta-head bolts for security
- Finish is Munsell green, oven cured powder coat
- All mounting hardware is 18-8 stainless steel

Catalog Number	Conductor Range (AWG)	Number of Conductors per phase	Dimensions				UL Listed Amp Rating	
			W	D	H	Door Opening	Copper	Aluminum
BPTE26-500	10 - 500 kcmil	26	36.00	30.00	44.00	30.00	4560	3720
BPTE22-750	2 - 750 kcmil	22	36.00	30.00	44.00	30.00	5225	4235
BPTE20-1000	350 - 1000 kcmil	20	36.00	30.00	44.00	30.00	4905	4005
BPTE14-750	2 - 750 kcmil	14	25.00	24.00	44.00	19.00	3800	3100

Blue highlighted items are industry standard and most frequently ordered.

TABLE OF CONTENTS

General Information B-2, B3
Mil. Spec. Equivalents B-4

RING TERMINALS
Types **T & YAD** (Bare) B-5
Type **YAD** (Bare) B-6, B-7
Types **TP & BA** (Vinyl) B-8
Types **TN & YAES** (Nylon) B-9
Type **YAE-G** (Nylon) B-10
Type **YAE-N** (Nylon) B-11
Type **YHSA** (Heat Shrink) B-12
Type **YAES-K** (Radiation Resistant) B-13, B-14
Types **YAV BOX & YAV** (Bare) B-15
Types **YAV-L BOX & YAV-L** (Bare) B-16, B-17
Types **YAV-H BOX & YAV-H** (Bare - Shroud) B-18
Types **YAEV & YAEV-L** (Nylon) B-19, B-20
Type **YAEV-H** (Nylon - for Expanded Ins.) B-21, B-22
Types **YAV-R & YAV-RS** (Bare - Right Angle) B-23
Type **YAEV-RS** (Nylon - Right Angle) B-24
Type **YAEV-RH** (Nylon - Right Angle) B-25
Type **YBM** (Bare - Flag Type) B-26

FORK TERMINALS
Types **T-F & YAD-F** (Bare) B-27
Types **TP-F & BA-EF** (Vinyl) B-28
Types **TN-F & YAES-F** (Nylon) B-29
Types **YAE-N-F BOX & YAE-N-F** (Nylon) B-30
Type **YHSA-F** (Heat Shrink) B-31
Type **T-LF** (Bare - Lock) B-32
Types **TP-LF & BA-EL** (Vinyl - Lock) B-33
Type **TN-LF** (Nylon - Lock) B-34
Type **YAE-N-LF** (Nylon - Lock) B-35
Type **YHSA-K-LF** (Heat Shrink - Lock) B-36
Type **T-BF** (Bare - Block) B-37
Type **TP-BF** (Vinyl - Block) B-38
Type **TN-BF** (Nylon - Block) B-39
Type **YAE-N-BF** (Nylon - Block) B-40
Type **YHSA-K-BF** (Heat Shrink - Block) B-41
Types **TP-Z & BA-EZ** (Vinyl - Flange) B-42
Types **YAE-Z BOX & YAE-Z** (Nylon - Flange) B-43
Types **YAV-T-F BOX & YAV-T-F** (Bare) B-44
Types **YAV-H-F BOX, YAV-H-F, & YAV-Z** (Bare - Shroud) B-45

SPLICES
Type **YSV-B** (Bare) B-46
Type **SP** (Vinyl) B-47
Type **SN** (Nylon) B-48
Type **SN-B** (Nylon) B-49
Types **YSE BOX & YSE-H BOX** (Nylon - Strain Relief) B-50
Type **YSE-HHS** (Heat Shrink - Strain Relief) B-51
Type **YSES-K** (Radiation Resistant) B-52
Type **YSV** (Bare) B-53
Type **YSV-L** (Bare) B-54
Type **YSV-H** (Bare - Strain Relief) B-55
Type **YSM** (Bare - Parallel) B-56
Type **YSCM** (Bare - Parallel) B-57
Types **YSV & YRV-L** (Reducer) B-58
Type **YHSS** (Heat Shrink) B-59

DISCONNECTS
Type **Q-M** (Male - Bare) B-60
Type **Q-F** (Female - Bare) B-61
Type **QP-M** (Male - Vinyl) B-62
Type **QP-F** (Female - Vinyl) B-63
Type **FQP-F** (Female - Full Vinyl) B-64
Type **QN-M** (Male - Nylon) B-65
Type **QN-F** (Female - Nylon) B-66
Type **FQN-M** (Male - Full Vinyl) B-67
Type **YHSQ-M** (Male - Heat Shrink) B-68
Type **YHSQ-F** (Female - Heat Shrink) B-69
Type **YHSFQ-F** (Female - Full Heat Shrink) B-70
Type **PG** (Male/Female Combo - Bare) B-71
Type **PGHS** (Male/Female Combo - Heat Shrink) B-71
Type **PGP** (Male/Female Combo - Vinyl) B-72
Type **PGN** (Male/Female Combo - Nylon) B-73
Type **FLN** (Female Flag - Nylon) B-74
Type **FL** (Female Flag - Bare) B-74

MISCELLANEOUS
Type **YAIT** (Splice - no tools req'd) B-75
Type **TTV** (Tap, Insulation Piercing - no tools req'd) B-75
Type **YATW-P** (3-way - Vinyl) B-76
Type **YATW-N** (3-way - Nylon) B-76
Type **YATW-NG** (3-way - Nylon Grip) B-77
Type **YATW-HS** (3-way - Heat Shrink) B-77
Type **YAFW-P** (4-way - Vinyl) B-78
Type **YAFW-N** (4-way - Nylon) B-78
Type **YAFW-NG** (4-way - Nylon Grip) B-79
Type **YAFW-HS** (4-way - Heat Shrink) B-79
Type **BULM-P** (Bullet Male - Vinyl) B-80
Type **BULM-N** (Bullet Male - Nylon) B-80
Type **BULM-NG** (Bullet Male - Nylon Grip) B-81
Type **BULM-HS** (Bullet Male - Heat Shrink) B-81
Type **BULF-P** (Bullet Female - Vinyl) B-82
Type **BULF-N** (Bullet Female - Nylon) B-82
Type **BULF-NG** (Bullet Female - Nylon Grip) B-83
Type **BULF-HS** (Bullet Female - Heat Shrink) B-83
Type **PTV** (Pin Terminal - Vinyl) B-84
Type **YF-UI** (Bare Ferrules) B-85, B-86
Type **YF-I** (Insulated Ferrules) B-87, B-88
Type **YF-TW** (Twin Insulated Ferrules) B-89
Small Terminal Kits B-90
Heat Shrink Kit B-91
Types **YQE & RK** (Pigtail Splice - Nylon) B-92

Blue highlighted items are industry standard and most frequently ordered.

Performance

The terminals and splices in this catalog are approved, per SAE-AS7928 and/or UL486, where indicated. Table 1 shows the performance requirements for terminals used in military and commercial equipment. The voltage drops listed are maximum allowable values taken at currents well above rated current for the wires. Tensile values assure that the wires will not become separated from the terminals under reasonably expected stresses. UL tensile values are chosen to reflect the severest expected duty. MIL Specification tensile values apply only to crimp terminations and reflect minimum values that are obtained in good crimp joints. Actual performance of BURNDY terminals exceeds the requirements of Table 1. Typical values are shown in Figures 1-5. For High Temperature applications BURNDY® YAV series with nickel plating "-NK" suffix provide for continuous operation to 650° F and 750° F intermittent service.

Table 1

Performance Requirements — Terminals for Copper Wire					
	Per SAE-AS7928			Per UL486	
Wire Size	Test Current (Amps)	Maximum Voltage Drop (Mv.)	Minimum Tensile Strength (Lbs.)	Minimum Tensile Strength (Lbs.)	Test Current For Max. 50°C Rise (Amps)
26	3	8	7	—	—
24	4.5	8	10	—	—
22	9	7	15	8	—
20	11	6	19	13	—
18	16	5	38	20	—
16	22	7	50	30	—
14	32	6	70	50	15
12	41	5	110	70	20
10	55	5	150	80	30
8	73	5	225	90	50
6	101	5	300	100	65
4	135	5	400	140	85
2	181	5	550	180	115
1	211	5	650	200	130
0	245	5	700	250	150
00	283	5	750	300	175
000	320	5	825	350	200
0000	380	5	875	450	230

Fig. 1. Tensile strength of YAD HYLUG™ after axial rotation stresses.

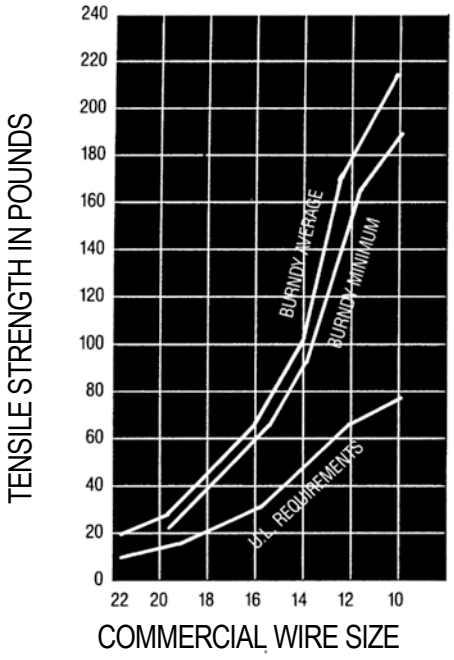

Fig. 2. Tensile strength of BA VINYLUG™ after axial rotation stresses.

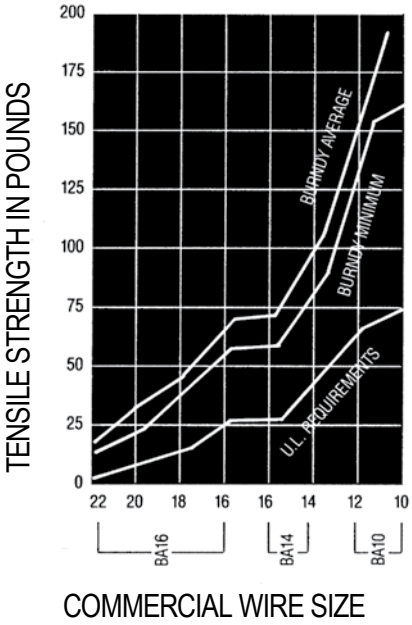

Fig. 3. Tensile strength of YAES INSULUG™ after vibration.

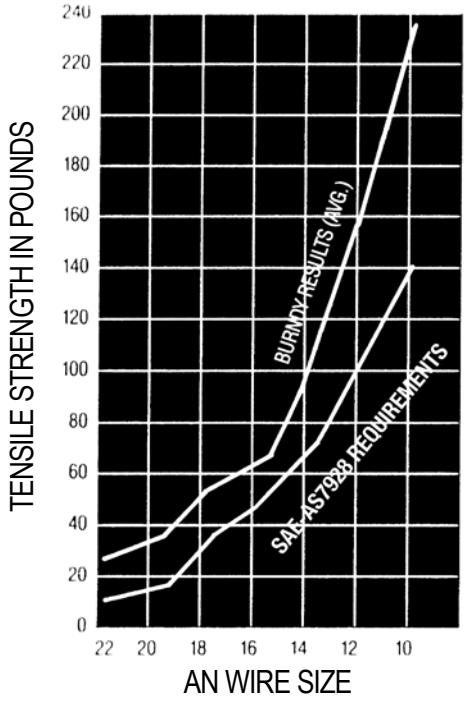

Fig. 5. Voltage drops of YAES at currents per Table 1 after vibration.

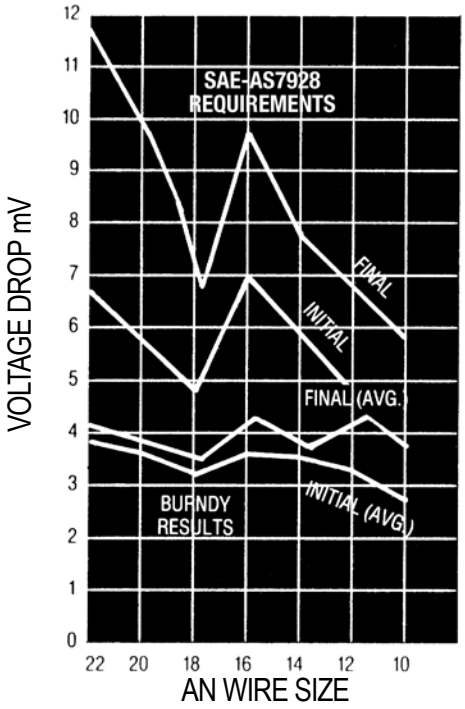

Fig. 4. Temperature rise of BA VINYLUG™ at currents per Table 1.

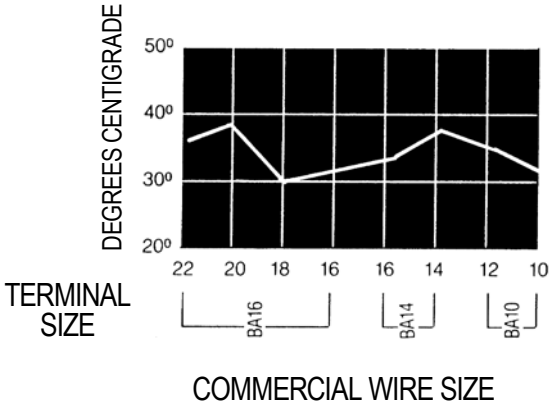

EQUIVALENT TABLES

MILITARY SPECIFICATIONS

Terminals

BURNDY® Equivalents to SAE-AS25036 in accordance with Specification SAE-AS7928.

AS25036 Dash No.	Catalog Number	Class 1	Class 2	AS25036 Dash No.	Catalog Number	Class 1	Class 2
101	YAES18-N1	X	X	124	YAEV4C-L4	X	
	YAE18-G43		X	125	YAEV4C-L2	X	X
102	YAES18-N2	X	X	126	YAEV2C-L1	X	X
	YAE18-N21		X	127	YAEV2C-L	X	
103	YAES18-N3	X	X	128	YAEV2C-L4	X	X
	YAE18N		X	129	YAEV1C-L1	X	
104	YAES18-N4	X	X	130	YAEV1C-L	X	X
	YAE18-N3		X	131	YAEV1C-L3	X	
105	YAES18-N5	X	X	132	YAEV25-L1	X	
	YAE18-N15		X	133	YAEV25-L	X	X
106	YAES14-N6	X	X	134	YAEV25-L3	X	
	YAE14-N43		X	135	YAEV26-L2	X	
107	YAES14-N7	X	X	136	YAEV26-L	X	
108	YAES14-N8	X	X	137	YAEV26-L3	X	
	YAES14N		X	143	YAE22-G18		X
109	YAES14-N9	X	X	144	YAE22-G16		X
	YAE14-N3		X	145	YAE22-G13		X
110	YAES14-N10	X		146	YAE22-G14		X
	YAE14-N4		X	147	YAE22-G15		X
111	YAES10-N11	X	X	148	YAES18-N48	X	X
	YAE10-N5		X		YAE18-N17		X
112	YAES10-N12	X	X	149	YAES18-N49	X	X
	YAE10N		X		YAE18N1		X
113	YAES10-N13	X	X	150	YAES18-N50	X	X
	YAE10-N2		X		YAE18-N2		X
114	YAES10-N14	X		152	YAES14-N52	X	X
	YAE10-N4		X	153	YAES14-N53	X	X
115	YAEV8C-L	X	X		YAE14-N1		X
116	YAEV8C-L1	X		154	YAES14-N54	X	X
117	YAEV8C-L2	X			YAE14-N2		X
118	YAEV8C-L3	X		155	YAES14-N55	X	X
119	YAEV6C-L1M	X	X	156	YAES10-N56	X	X
120	YAEV6C-LM	X			YAE10-N11		X
121	YAEV6C-L4M	X		157	YAES10-N57	X	X
122	YAEV6C-L2M	X			YAE10-N3		X
123	YAEV4C-L	X		158	YAES10-N58	X	X

Terminals

BURNDY® Equivalents to SAE-AS20659 in accordance with Specification SAE-AS7928.

AS20659 Dash No.	Catalog Number	Class 1	Class 2	AS20659 Dash No.	Catalog Number	Class 1	Class 2
105	YAV10	X	X	134	YAV1C-L3	X	
106	YAV10-T2	X	X	135	YAV25-L3	X	
107	YAV8C-L	X		136	YAV26-L3	X	X
108	YAV8C-L2	X		137	YAV28-L54	X	
109	YAV6C-L	X	X	140	YAV8C-L14	X	
110	YAV6C-L2	X		141	YAV8C-L1	X	X
111	YAV4C-L	X	X	142	YAV8C-L4	X	
112	YAV4C-L2	X		143	YAV6C-L10	X	
113	YAV2C-L1	X		144	YAV4C-L3	X	
114	YAV2C-L	X		145	YAV4C-L5	X	
115	YAV1C-L1	X	X	146	YAV2C-L3	X	
116	YAV1C-L	X		147	YAV2C-L2	X	X
117	YAV25-L1	X		148	YAV2C-L11	X	
118	YAV25-L	X	X	149	YAV1C-L2	X	
119	YAV26-L2	X		150	YAV1C-L4	X	
120	YAV26-L	X		151	YAV25-L2	X	
121	YAV27-L	X	X	152	YAV25-L16	X	
122	YAV27-L1	X		153	YAV26-L1	X	
123	YAV28-L	X		154	YAV26-L16	X	
124	YAV28-L12	X	X	155	YAV27-L20	X	
128	YAV10-T4	X	X	156	YAV27-L18	X	
129	YAV8C-L3	X		157	YAV28-L56	X	
130	YAV6C-L1	X		158	YAV28-L60	X	
131	YAV6C-L4	X		159	YAV28-L13	X	
132	YAV4C-L4	X		160	YAV28-L14	X	
133	YAV2C-L4	X		165	YAV10-T7	X	X

Main Office Cage Code Number: 1NJK8

Notes:
For factory cage code numbers, please contact your local BURNDY® sales representative or the Headquarters at the phone number shown below.
SAE standes for the Society of Automotive Engineering, which has replaced the Military Specifications.

Blue highlighted items are industry standard and most frequently ordered.

TYPES T AND YAD

HYLUG™

Uninsulated Compression Ring Tongue Terminal

The Type T uninsulated terminals are constructed of pure electrolytic copper. Designed with a long brazed seam barrel, standard neck, deep V groove inner serrations and electro-tin plated. The terminals are ideal for control wiring and other standard duty applications.

The ring tongue provides a secure termination under the screw head that cannot be removed without the complete removal of the screw. Two or more terminals can easily be stacked on a common stud.

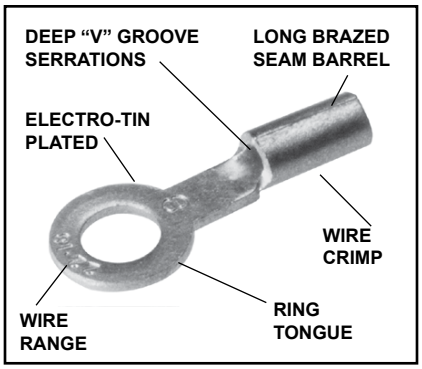

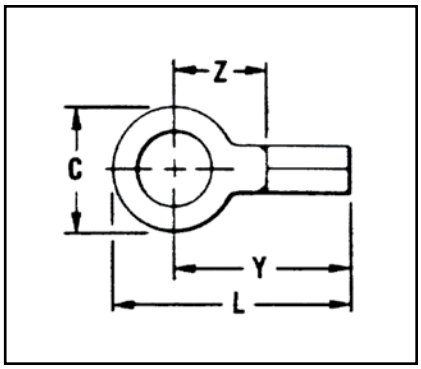

Features & Benefits

- Constructed of pure electrolytic copper
  - ◊ Provides maximum conductivity, low resistance and ductility for excellent crimp forming properties
- Long brazed seam barrel and deep V groove inner serrations
  - ◊ Provides optimum conductivity reliability and holding power after crimping
- Electro-tin plated
  - ◊ Provides durable long-lasting corrosion resistance
- Wire range is clearly marked on terminal
  - ◊ Provides easy identification
- Inspection hole
  - ◊ Provides an easy visual check of wire insertion
- Long neck terminal
  - ◊ Permits easy bending and stacking of several terminals on a common stud

Catalog Number	Wire Range (AWG/kcmil)	Stud Size	Dimensions C	Dimensions L Max.	Dimensions Y Max.	Dimensions Z Min.	Bulk Catalog Number	Installation Tooling	Tape Mounted Catalog Number 2000/Reel	Installation Tooling	Wire Strip Length
T18-4	22 AWG-18 AWG	#3 - #4	0.25	0.65	0.53	0.24	**YAD18-4**	Non-Ratchet: Y10D, Y10-22 Ratchet: MRE1022B, MR8G98, Y8MRB-1, MR20	**YAD18-4M**	TFM with DFM6D1 Die	9/32"
T18-6		#4 - #6	0.25	0.65	0.53	0.24	**YAD18-6**		**YAD18-6M**		
T18-8		#6 - #8	0.31	0.77	0.61	0.33	**YAD18-8**		**YAD18-8M**		
T18-10		#8 - #10	0.31	0.77	0.61	0.33	**YAD18-10**		**YAD18-10M**		
T18-14		1/4	0.45	0.96	0.73	0.44	**YAD18-14**		**YAD18-14M**		
T18-516		5/16	0.45	0.96	0.73	0.44	**YAD18-516**		—		
T18-38		3/8	0.53	1.05	0.78	0.49	**YAD18-38**		—		
T14-4	20 AWG-14 AWG	#3 - #4	0.25	0.67	0.55	0.26	**YAD14-4**		—	—	9/32"
T14-6		#4 - #6	0.25	0.67	0.55	0.26	**YAD14-6**		**YAD14-6M**	TFM with DFM5D1 Die	
T14-8		#6 - #8	0.31	0.77	0.61	0.33	**YAD14-8**		**YAD14-8M**		
T14-10		#8 - #10	0.31	0.77	0.61	0.33	**YAD14-10**		**YAD14-10M**		
T14-14		1/4	0.45	0.96	0.73	0.44	**YAD14-14**		**YAD14-14M**		
T14-516		5/16	0.45	0.96	0.73	0.44	**YAD14-516**		—		
T14-38		3/8	0.53	1.05	0.78	0.49	**YAD14-38**		**YAD14-38M**		11/32"
T10-6	12 AWG-10 AWG	#4 - #6	0.37	0.83	0.64	0.29	**YAD10-6**		—	TFM with DFM4D1 Die	11/32"
T10-8		#6 - #8	0.37	0.83	0.64	0.29	**YAD10-8**		**YAD10-8M**		
T10-10		#8 - #10	0.38	0.83	0.64	0.29	**YAD10-10**		—		
T10-14		1/4	0.46	0.97	0.74	0.39	**YAD10-14**		**YAD10-14M**		
T10-516		5/16	0.53	1.02	0.76	0.41	**YAD10-516**		**YAD10-516M**		
T10-38		3/8	0.58	1.08	0.79	0.44	**YAD10-38**		**YAD10-38M**		
T10-12*		1/2	0.69	1.21	0.86	0.61	—		—	—	

* Not UL Listed or CSA Certified.

Blue highlighted items are industry standard and most frequently ordered.

TYPE YAD

HYLUG™

Uninsulated Compression Terminal

The YAD uninsulated OEM lug terminal is constructed of electrolytic copper. Designed with a brazed seam barrel, standard neck, V-groove inner serrations and electro-tin plated. The round ring tongue provides for a secure termination under the screw head that cannot be removed without the complete removal of the screw. Two or more terminals can easily be stacked on a common stud. These terminals are ideal for use with code or flex cable.

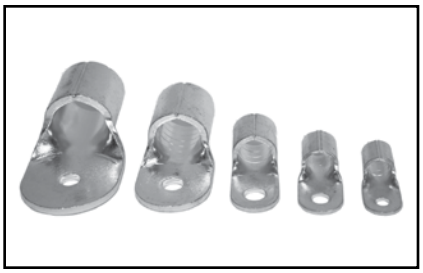

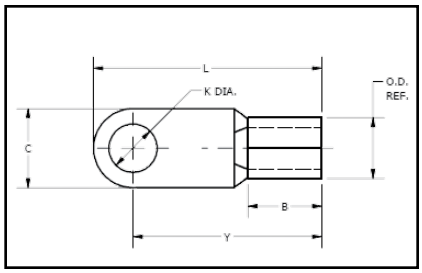

Features & Benefits

- Terminals utilize a brazed seam
- Provide excellent high conductivity connections
- Electro-tin plated for durable long lasting corrosion resistance
- Vibration resistance and tensile strength is well within the limits of commercial specifications

Catalog Number	Wire Range Copper Code & Flex [mm]	Stud Size	B	C	K Dia.	L	OD	T	Y	Installation Tooling: Mechanical Tooling	Installation Tooling: Hydraulic Tooling (requires nest & indentor): Tool	Installation Tooling: Hydraulic Tooling (requires nest & indentor): Die Nest	Installation Tooling: Hydraulic Tooling (requires nest & indentor): Indentor	Installation Tooling: Dieless Tooling (no dies required)	Wire Strip Length
YAD8CM4E8	8 AWG [6-10]	#8	0.31	0.40	0.17	0.83	0.26	0.04	0.63	Y1MRTC Y8MRB-1 Red Groove	Y35, Y39, Y750, PAT750	UV8L	Y34PL	Y81KFT Series PAT81KFT Series Y4PC834 Series PAT4PC834 Series	3/8"
YAD8CM5E10		#10	0.31	0.40	0.21	0.83	0.26	0.04	0.63						
YAD8CM6E14		1/4	0.31	0.43	0.26	0.89	0.26	0.04	0.67						
YAD8CM8E516		5/16	0.31	0.55	0.33	1.06	0.26	0.04	0.79						
YAD8CM10E38		3/8	0.31	0.71	0.41	1.18	0.26	0.04	0.83						
YAD8CM12E12		1/2	0.31	0.87	0.51	1.34	0.26	0.04	0.91						
YAD8CM16E58		5/8	0.31	1.10	0.67	1.93	0.26	0.04	1.38						
YAD6CM5E10	6 AWG [10-16]	#10	0.40	0.43	0.21	1.00	0.32	0.05	0.79	Y1MRTC Blue Groove	Y35, Y39, Y750, PAT750	UV6L	Y34PL		7/16"
YAD6CM6E14		1/4	0.40	0.43	0.26	1.00	0.32	0.05	0.79						
YAD6CM8E516		5/16	0.40	0.55	0.33	1.14	0.32	0.05	0.87						
YAD6CM10E38		3/8	0.40	0.71	0.41	1.30	0.32	0.05	0.95						
YAD6CM12E12		1/2	0.40	0.87	0.51	1.46	0.32	0.05	1.02						
YAD4CM5E10	4 AWG [16-25]	#10	0.43	0.47	0.21	1.22	0.41	0.06	0.98	—	Y35, Y39, Y750, PAT750	U2CD1	Y34PR		1/2"
YAD4CM6E14		1/4	0.43	0.47	0.26	1.22	0.41	0.06	0.98						
YAD4CM8E516		5/16	0.43	0.63	0.33	1.30	0.41	0.06	0.98						
YAD4CM10E38		3/8	0.43	0.71	0.41	1.38	0.41	0.06	1.02						
YAD4CM12E12		1/2	0.43	0.87	0.51	1.65	0.41	0.06	1.22						
YAD4CM16E58		5/8	0.43	1.10	0.67	1.93	0.41	0.06	1.38						
YAD4CM20E34		3/4	0.43	1.10	0.80	1.93	0.41	0.06	1.38						
YAD2CM6E14	2 AWG [25-35]	1/4	0.47	0.59	0.26	1.32	0.48	0.06	1.02	—	Y35, Y39, Y750, PAT750	U1CD1	Y34PR		17/32"
YAD2CM8E516		5/16	0.47	0.63	0.33	1.34	0.48	0.06	1.02						
YAD2CM10E38		3/8	0.47	0.71	0.41	1.42	0.48	0.06	1.06						
YAD2CM12E12		1/2	0.47	0.87	0.51	1.65	0.48	0.06	1.22						
YAD2CM16E58		5/8	0.47	1.10	0.67	1.97	0.48	0.06	1.42						
YAD2CM20E34		3/4	0.47	1.10	0.80	1.97	0.48	0.06	1.42						
YAD1CM6E14	1 AWG [35-50]	1/4	0.63	0.71	0.26	1.69	0.57	0.07	1.34	—	Y35, Y39, Y750, PAT750	UV26L	Y34PA		3/4"
YAD1CM8E516		5/16	0.63	0.71	0.33	1.69	0.57	0.07	1.34						
YAD1CM10E38		3/8	0.63	0.71	0.41	1.69	0.57	0.07	1.34						
YAD1CM12E12		1/2	0.63	0.87	0.51	1.85	0.57	0.07	1.42						
YAD1CM16E58		5/8	0.63	1.10	0.67	2.13	0.57	0.07	1.57						
YAD1CM20E34		3/4	0.63	1.10	0.80	2.13	0.57	0.07	1.57						
YAD25M6E14	1/0 AWG [35-50]	1/4	0.63	0.71	0.26	1.69	0.57	0.07	1.34	—	Y35, Y39, Y750, PAT750	UV26L	Y34PA		3/4"
YAD25M8E516		5/16	0.63	0.71	0.33	1.69	0.57	0.07	1.34						
YAD25M10E38		3/8	0.63	0.71	0.41	1.69	0.57	0.07	1.34						
YAD25M12E12		1/2	0.63	0.87	0.51	1.85	0.57	0.07	1.42						
YAD25M16E58		5/8	0.63	1.10	0.67	2.13	0.57	0.07	1.57						
YAD25M20E34		3/4	0.63	1.10	0.80	2.13	0.57	0.07	1.57						

Blue highlighted items are industry standard and most frequently ordered.

TYPE YAD
(Continued)

HYLUG™

Uninsulated Compression Terminal

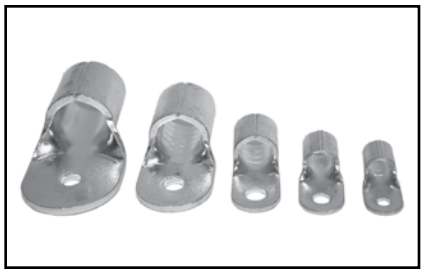

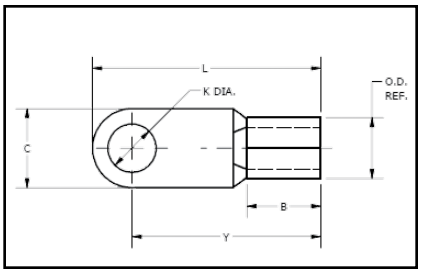

Catalog Number	Wire Range Copper Code & Flex [mm]	Stud Size	B	C	K Dia.	L	OD	T	Y	Installation Tooling: Hydraulic Tooling (requires nest & indentor): Tool	Die Nest	Indentor	Dieless Tooling (no dies required)	Wire Strip Length
YAD26M6E14	2/0 AWG [50-70]	1/4	0.71	0.87	0.26	1.93	0.67	0.08	1.50	Y35, Y39, Y750, PAT750	UV28D1	Y34PR2	Y81KFT Series PAT81KFT Series Y4PC834 Series PAT4PC834 Series	13/16"
YAD26M8E516		5/16	0.71	0.87	0.33	1.93	0.67	0.08	1.50					
YAD26M10E38		3/8	0.71	0.87	0.41	1.93	0.67	0.08	1.50					
YAD26M12E12		1/2	0.71	0.87	0.51	1.93	0.67	0.08	1.50					
YAD26M16E58		5/8	0.71	1.10	0.67	2.20	0.67	0.08	1.65					
YAD26M20E34		3/4	0.71	1.10	0.80	2.20	0.67	0.08	1.65					
YAD27M8E516	3/0 AWG [70-95]	5/16	0.79	0.95	0.33	2.13	0.79	0.10	1.65	Y35, Y39, Y750, PAT750	UV29D1	Y34PR2		7/8"
YAD27M10E38		3/8	0.79	0.95	0.41	2.13	0.79	0.10	1.65					
YAD27M12E12		1/2	0.79	0.95	0.51	2.13	0.79	0.10	1.65					
YAD27M16E58		5/8	0.79	1.10	0.67	2.28	0.79	0.10	1.73					
YAD27M20E34		3/4	0.79	1.10	0.80	2.28	0.79	0.10	1.73					
YAD28M6E14	4/0 AWG [95-120]	1/4	0.87	0.95	0.26	2.20	0.89	0.12	1.73	Y35, Y39, Y750, PAT750	U32D1	Y34PR2		1"
YAD28M8E516		5/16	0.87	0.95	0.33	2.20	0.89	0.12	1.73					
YAD28M10E38		3/8	0.87	0.95	0.41	2.20	0.89	0.12	1.73					
YAD28M12E12		1/2	0.87	0.95	0.51	2.20	0.89	0.12	1.73					
YAD28M16E58		5/8	0.87	1.10	0.67	2.44	0.89	0.12	1.89					
YAD28M20E34		3/4	0.87	1.10	0.80	2.44	0.89	0.12	1.89					
YAD30M10E38	250-300 kcmil [120-150]	3/8	0.95	1.18	0.41	2.56	1.00	0.13	1.97	Y46, PAT46	P34D	P48PR2		1-1/8"
YAD30M12E12		1/2	0.95	1.18	0.51	2.56	1.00	0.13	1.97					
YAD30M16E58		5/8	0.95	1.18	0.67	2.56	1.00	0.13	1.97					
YAD30M20E34		3/4	0.95	1.18	0.80	2.56	1.00	0.13	1.97					
YAD31M10E38	300-350 kcmil [150-185]	3/8	1.10	1.42	0.41	2.68	1.12	0.14	1.97	Y46, PAT46	P34D	P48PR2		1-1/4"
YAD31M12E12		1/2	1.10	1.42	0.51	2.68	1.12	0.14	1.97					
YAD31M16E58		5/8	1.10	1.42	0.67	2.68	1.12	0.14	1.97					
YAD31M20E34		3/4	1.10	1.42	0.80	2.68	1.12	0.14	1.97					
YAD33M10E38	400-450 kcmil [185-240]	3/8	1.26	1.50	0.41	2.95	1.24	0.16	2.20	Y46, PAT46	P36D	P48PR2		1-3/8"
YAD33M12E12		1/2	1.26	1.50	0.51	2.95	1.24	0.16	2.20					
YAD33M16E58		5/8	1.26	1.50	0.67	2.95	1.24	0.16	2.20					
YAD33M20E34		3/4	1.26	1.50	0.80	2.95	1.24	0.16	2.20					
YAD36M10E38	500-600 kcmil [240-300]	3/8	1.38	1.97	0.41	3.70	1.44	0.18	2.72	Y46, PAT46	P44D	P48PR2		1-1/2"
YAD36M12E12		1/2	1.38	1.97	0.51	3.70	1.44	0.18	2.72					
YAD36M16E58		5/8	1.38	1.97	0.67	3.70	1.44	0.18	2.72					
YAD36M20E34		3/4	1.38	1.97	0.80	3.70	1.44	0.18	2.72					

Blue highlighted items are industry standard and most frequently ordered.

TYPES TP AND BA

VINYLUG™

Terminal — Polyvinylchloride Insulated, Ring Tongue

600 Volts Max., 105° C Max.

VINYLUG™ Type TP is designed for commercial and light duty industrial control and power circuit applications. Supplied with an expanded polyvinyl chloride (PVC) insulation shroud, many tongue variations and rated 600V makes TP terminals versatile and economical.

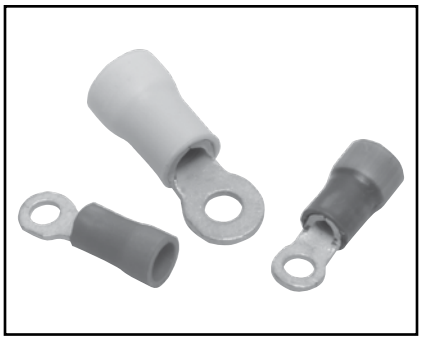

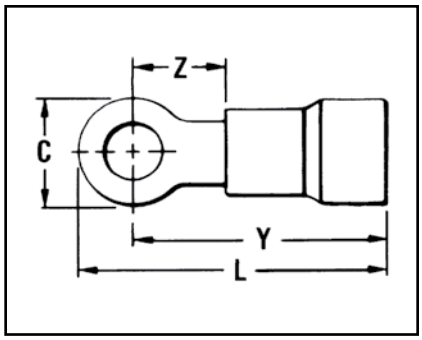

Features & Benefits

- Expanded insulation support accepts standard and large wire diameters
  - ◊ Lowers inventory requirements, permits greater flexibility and provides insulation support
- Funnel entry
  - ◊ Easy wire insertion
- Manufactured of pure electrolytic copper
  - ◊ Provides maximum conductivity, low resistance and ductility for excellent crimp forming properties
- Deep V groove serrations in the inner barrel
  - ◊ Provides added holding strength and better conductivity
- Electro-tin plated
  - ◊ Provides durable long-lasting corrosion resistance

Catalog Number	Wire Range (AWG/kcmil)	Stud Size	Dimensions				Bulk Catalog Number	Installation Tooling	Tape Mounted Catalog Number 2000/Reel	Installation Tooling	Wire Strip Length
			C	L	Y	Z					
TP16-4	22-16 Max. Insul. Dia.Accom.:.145 Color Code: Red	#3-#4	0.22	0.71	0.61	0.17	BA16E4M	Plier Type: Y10-22, Y10D or Ratchet Tool: MR8-89-1, MR8-G96, MR15 MRE1022NV	BA16E4M	TFM with DFM3D-1 Die	13/64"
TP16-6		#6	0.25	0.74	0.62	0.18	BA16E6M		BA16E6M		
TP16-8		#6 - #8	0.31	0.85	0.70	0.26	BA16E8M		BA16E8M		
TP16-10		#8 - #10	0.31	0.85	0.70	0.26	BA16E10M		BA16E10M		
TP16-14		1/4	0.40	0.99	0.79	0.36	BA16E14M		BA16E14M		
TP16-516*		5/16	0.47	1.11	0.88	0.41	—		—	—	13/64"
TP16-38		3/8	0.53	1.15	0.88	0.45	BA16E38M		BA16E38M	TFM with DFM3D-1 Die	13/64"
TP14-4	16-14 Max. Insul. Dia. Accom.:.180 Color Code: Blue	#4	0.22	0.11	0.61	0.17	BA14E4M	Plier Type: Y10-22, Y10D or Ratchet Tool: MR8-89-1, MR8-G96, MR15 MRE1022NV	BA14E4M	TFM with DFM2D-1 Die	13/64"
TP14-6		#6	0.25	0.74	0.62	0.18	BA14E6M		BA14E6M		
TP14-8		#6 - #8	0.31	0.85	0.70	0.26	BA14E8M		BA14E8M		
TP14-10		#8 - #10	0.31	0.85	0.70	0.26	BA14E10M		BA14E10M		
TP14-14		1/4	0.40	0.99	0.79	0.36	BA14E14M		BA14E14M		
TP14-516		5/16	0.53	1.15	0.88	0.45	BA14E516M		BA14E516M		
TP14-38		3/8	0.53	1.15	0.88	0.45	BA14E38		—		
TP10-6	12-10 Max. Insul. Dia. Accom.:.260 Color Code: Yellow	#6	0.31	0.68	0.75	0.20	BA10E6M	Plier Type: Y10-22, Y10D or Ratchet: MR8-89-1, MR15, M8ND w/N10HET-23 MRE1022NV	BA10E6M	TFM with DFM1D5 Die	19/64"
TP10-8		#6 - #8	0.36	1.00	0.81	0.26	BA10E8M		BA10E8M		
TP10-10		#8-#10	0.36	1.00	0.81	0.26	BA10E10M		BA10E10M		
TP10-14		1/4	0.53	1.22	0.95	0.40	BA10E14M		BA10E14M		
TP10-516		5/16	0.53	1.22	0.95	0.42	BA10E516		—	—	19/64"
TP10-38		3/8	0.53	1.27	1.00	0.45	BA10E38M		BA10E38M	TFM with DFM1D5 Die	19/64"
TP10-12*		1/2	0.69	1.51	1.17	0.61	—		—	—	19/64"

* Not UL Listed or CSA Certified.

Blue highlighted items are industry standard and most frequently ordered.

TYPES TN AND YAES

INSULUG™

Terminal - Nylon Insulated,
Ring Tongue
600 Volts Max., 105° C Max.

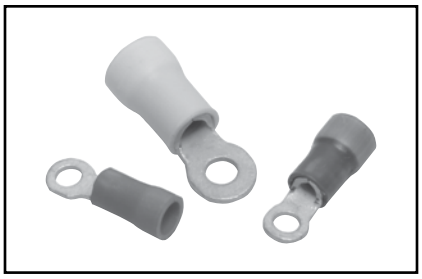

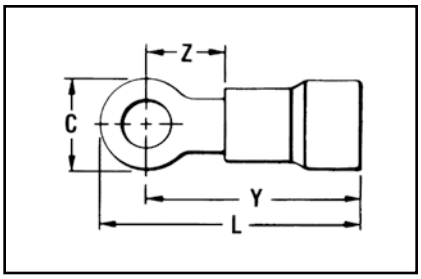

INSULUG™ type TN Nylon-insulated terminals are designed for heavy duty industrial, utility and military power and control-circuit applications for wire sizes 26 AWG through 10 AWG. They offer high dielectric strength and stability in oily conditions and meet military CLASS 1 and CLASS 2 requirements per SAE-AS25036 and the requirements of military specifications SAE-AS7928.

Features & Benefits

- An integral one-piece copper barrel / insulation grip and wire strain relief design
  ◊ Provides improved physical strength characteristics over a multi-piece design
- Manufactured of pure electrolytic copper
  ◊ Provides maximum conductivity, low resistance and ductility for excellent crimp forming properties
- Brazed seam
  ◊ Provides a stronger barrel design to minimize any possible splitting and eliminates folding
- Deep inner barrel serrations
  ◊ Provides excellent electrical conductivity and pullout strength values
- Smooth funnel entry
  ◊ Easy wire insertion
- The insulation is locked in place
  ◊ Will not twist off, thereby maintains proper dielectric values
- Electro-tin plated
  ◊ Provides durable long-lasting resistance to corrosion
- Color-coded and clearly marked
  ◊ Provides quick, easy wire size identification
- Ring Tongue
  ◊ Provides a secure termination under the screw head that can not be removed without complete removal of the screw
- Two or more terminals may be stacked on a common stud easily
  ◊ Provides flexibility and versatility

Catalog Number	Wire Range (AWG/kcmil)	Stud Size	SAE-25036	Dimensions				Bulk Catalog Number	Installation Tooling	Wire Strip Length
				C	L Max.	Y Max.	Z Max.			
TN18-4	22-18 Max. Insul. Dia. Accom.: .120 Color Code: Red	#3 - #4	-148	0.23	0.76	0.64	0.20	**YAES18N48**	Ratchet: MR8-83 MRE1022NV Non-Ratchet: Y10D, Y1022	7/32
TN18-6		#4 - #6	-101	0.25	0.76	0.64	0.20	**YAES18N1**		
TN18-6G1*		#4 - #6	-102	0.25	0.87	0.74	0.49	**YAES18N2**		
TN18-8		#6 - #8	-149	0.31	0.91	0.76	0.29	**YAES18N49**		
TN18-10		#8 - #10	-103	0.31	0.91	0.76	0.29	**YAES18N3**		
TN18-14		#12-1/4	-150	0.46	1.09	0.87	0.41	**YAES18N50**		
TN18-516		5/16	-104	0.46	1.09	0.87	0.41	**YAES18N4**		
TN18-38		3/8	-105	0.53	1.17	0.91	0.45	**YAES18N5**		
TN14-4	16-14 Max. Insul. Dia. Accom.: .153 Color Code: Blue	#3 - #4	-152	0.25	0.79	0.67	0.24	**YAES14N52**	Ratchet: MR8-83 MRE1022NV Non-Ratchet: Y10D, Y1022	7/32
TN14-6		#4 - #6	-106	0.25	0.79	0.67	0.24	**YAES14N6**		
TN14-6G1*		#4 - #6	-107	0.30	0.91	0.76	0.51	**YAES14N7**		
TN14-8		#6 - #8	-153	0.31	0.89	0.74	0.31	**YAES14N53**		
TN14-10		#8 - #10	-108	0.31	0.89	0.74	0.31	**YAES14N8**		
TN14-14		#12-1/4	-154	0.45	1.08	0.86	0.43	**YAES14N54**		
TN14-516		5/16	-109	0.45	1.08	0.86	0.43	**YAES14N9**		
TN14-38		3/8	-110	0.53	1.16	0.90	0.47	**YAES14N10**		
TN10-6	12-10 Max. Insul. Dia. Accom.:.210 Color Code: Yellow	#4 - #6	-111	0.37	1.12	0.94	0.26	**YAES10N11**	Ratchet: MR8-83 MRE1022NV Non-Ratchet: Y10D, Y1022	11/32
TN10-8		#6 - #8	-156	0.37	1.12	0.94	0.26	**YAES10N56**		
TN10-10		#8 - #10	-112	0.37	1.12	0.94	0.26	**YAES10N12**		
TN10-14		#12-1/4	-157	0.53	1.32	1.06	0.37	**YAES10N57**		
TN10-516		5/16	-113	0.53	1.32	1.06	0.37	**YAES10N13**		
TN10-38		3/8	-114	0.58	1.34	1.05	0.40	**YAES10N14**		
TN10-12*		1/2	—	0.69	1.51	1.18	0.61	**YAES10N58**		

* Not UL Listed or CSA Certified.

Blue highlighted items are industry standard and most frequently ordered.

TYPES YAE-G

INSULUG™

Terminal — Nylon Insulated, Ring-Tongue Multi-Finger Insulation Grip

300 Volts Max., 105° C Max.

INSULUG™ Types YAE-G and YAE-N nylon insulated terminals are designed with a multi-finger insulation grip for paper, EPR and other elastic or hard to grip insulations. The metal fingers firml grip the insulation providing superior holding characteristics, cable support and strain relief. Types YAE-G and YAE-N terminals are rated 105° C and meet military standard AS25036 Class 2 and SAE-AS7928 requirements.

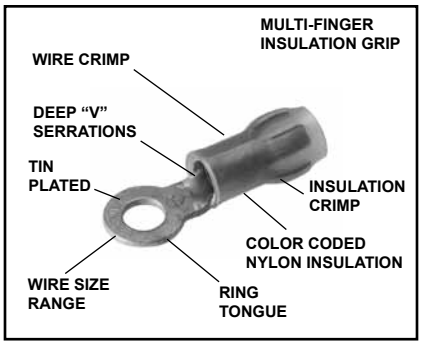

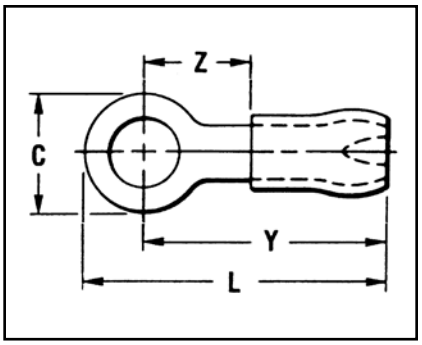

Features & Benefits

- Multi-finger insulation grip
  - ◊ Provides superior insulation holding characteristics, especially on EPR and other elastic-type insulations
- Brazed seam
  - ◊ Provides stronger more durable termination
- Manufactured of pure electrolytic copper
  - ◊ Provides maximum conductivity, low resistance and ductility for excellent crimp forming properties
- Deep V groove, inner barrel serrations
  - ◊ Provide optimum conductivity, reliability, and holding power
- Smooth funnel entry
  - ◊ Easy wire insertion

Catalog Number	Wire Range (AWG/kcmil)	Stud Size	** SAE-AS25036-	Dimensions				Bulk Catalog Number	Installation Tooling	Tape Mounted Catalog Number 2000/Reel	Installation Tooling	Wire Strip Length
				C	L Max.	Y Max.	Z Max.					
YAE22G18BOX	26-20 Max. Insul. Dia. Accom.: .098 Color Code: Amber	#2	148	0.15	0.69	0.62	0.22	**YAE22G18**	M8ND with N14HET-25V1 Die MR8-1A	**YAE22G18M**	TFM with DFM11D1 Die	5/32"
YAE22G12BOX		#1 - #2	—	0.25	0.74	0.62	0.22	**YAE22G12**		—		
YAE22G16BOX		#4	144	0.18	0.75	0.62	0.22	**YAE22G16**		**YAE22G16M**		
YAE22G13BOX		#4 - #6	145	0.25	0.74	0.62	0.22	**YAE22G13**		**YAE22G13M**		
YAE22G14BOX		#6 - #8	146	0.32	0.82	0.67	0.27	**YAE22G14**		—		
YAE22G15BOX		#8 - #10	147	0.32	0.83	0.67	0.27	**YAE22G15**		—		

* 1000/Box
** Class 2

Blue highlighted items are industry standard and most frequently ordered.

TYPE YAE-N

INSULUG™

Terminal - Nylon Insulated,
Ring Tongue Multi-Finger
Insulation Grip
600 Volts Max., 105° C Max.

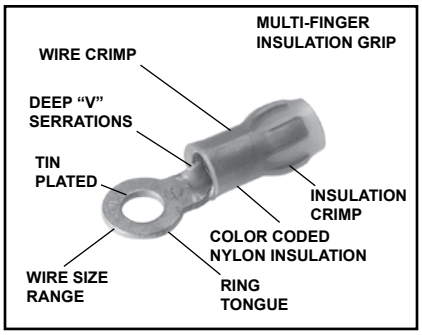

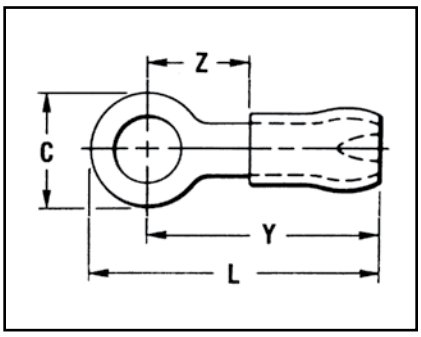

INSULUG™ Type YAE-N nylon insulated terminals are designed with a multi-finger insulation grip for paper, EPR and other elastic or hard to grip insulations. The metal fingers firmly grip the insulation providing superior holding characteristics, cable support and strain relief. Type YAE-N terminals are rated 105° C and meet military standard AS25036 Class 2 and SAE-AS7928 requirements.

Features & Benefits

- Multi-finger insulation grip
- Provides superior insulation holding characteristics, especially on EPR and other elastic-type insulations
- Brazed seam
- Provides stronger more durable termination
- Manufactured of pure electrolytic copper
- Provides maximum conductivity, low resistance and ductility for excellent crimp forming properties
- Deep V groove, inner barrel serrations
- Provide optimum conductivity, reliability, and holding power
- Smooth funnel entry
- Easy wire insertion

Catalog Number	Wire Range	Stud Size	***SAE-AS25036	Dimensions				Bulk Catalog Number	Installation Tooling	Tape Mounted Catalog Number 2000/Reel	Wire Strip Length
				C	L Max.	Y Max.	Z Min.				
YAE18N26BOX	22 - 16	#4	—	0.22	0.78	0.70	0.19	YAE18N26	MR8-1A, MR8-33T-1 (no extra dies required) M8ND with one of the following dies: N14HET-25V1 N10ET-9 N14HET-15 N10ET-23 or Y10D Y10-22	YAE18N26M	3/16"
YAE18N21BOX		#4-#6	102	0.25	0.89	0.77	0.28	YAE18N21		YAE18N21M	
YAE18N24BOX		#6-#8	—	0.28	0.90	0.77	0.28	YAE18N24		YAE18N24M	
YAE18NBOX		#8-#10	103	0.31	0.92	0.77	0.28	YAE18N		YAE18NM	
YAE18N2BOX		1/4	150	0.45	1.10	0.88	0.40	YAE18N2		YAE18N2M	
YAE18N3BOX		5/16	104	0.45	1.11	0.88	0.40	YAE18N3		YAE18N3M	
YAE18N15BOX		3/8	105	0.53	1.19	0.93	0.43	YAE18N15		YAE18N15M	
YAE14N43BOX	16 - 14	#4-#6	106 107	0.25	0.82	0.69	0.21	YAE14N43		YAE14N43M	3/16"
YAE14N1BOX		#6-#8	153	0.31	0.92	0.75	0.28	YAE14N1		YAE14N1M	
YAE14NBOX		#8-#10	108	0.31	0.92	0.75	0.28	YAE14N		YAE14NM	
YAE14N2BOX		1/4	154	0.45	1.11	0.88	0.40	YAE14N2		YAE14N2M	
YAE14N3BOX		5/16	109	0.45	1.11	0.88	0.40	YAE14N3		YAE14N3M	
YAE14N4BOX		3/8	110	0.53	1.19	0.93	0.45	YAE14N4		YAE14N4M	
YAE12N9BOX	14 - 12	#6-#8	—	0.31	1.06	0.90	0.29	YAE12N9	MR8-1A, MR8-33T-1 (no extra dies required) Y10D M8ND with N12HET-1	YAE12N9M	21/64"
YAE12N1BOX		#6-#8	—	0.31	1.06	0.90	0.29	YAE12N1		YAE12N1M	
YAE12N2BOX		1/4	—	0.45	1.25	1.02	0.40	YAE12N2		YAE12N2M	
YAE12N7BOX		#5	—	0.31	1.06	0.90	0.29	YAE12N7		YAE12N7M	
YAE12NBOX		#8-#10	—	0.31	1.06	0.90	0.29	YAE12N		YAE12NM	
YAE10N5BOX	12 - 10	#4-#6	111	0.38	1.15	0.96	0.28	YAE10N5	MR8-33T-1 (no extra dies required) M8ND with one of the following dies: N10HET-15, N10ET-9, N10ET-23 Y10D Y10-22	YAE10N5M	3/8"
YAE10N11BOX		#6-#8	156	0.38	1.17	0.98	0.30	YAE10N11		YAE10N11M	
YAE10NBOX		#8-#10	112	0.38	1.15	0.96	0.28	YAE10N		YAE10NM	
YAE10N3BOX		1/4	157	0.54	1.39	1.12	0.44	YAE10N3		YAE10N3M	
YAE10N2BOX		5/16	113	0.54	1.39	1.12	0.44	YAE10N2		YAE10N2M	
YAE10N4BOX		3/8	114	0.54	1.39	1.12	0.44	YAE10N4		YAE10N4M	
YAE10N79BOX		1/2	—	0.72	1.50	1.20	0.58	YAE10N79		—	

* Not UL Listed or CSA Certified.

Blue highlighted items are industry standard and most frequently ordered.

TYPE YHSA

HYDENT™ HEAT SHRINK RING TERMINALS

For Use on Copper Conductor

Standard crimp terminals leave the wire exposed allowing in moisture or other contaminants which can result in corrosion. Corrosion reduces the amount of current the wire can carry safely. The integrity of the electrical system can be compromised when unsealed electrical connections are utilized. Heat shrink terminals provide a durable seal blocking out contaminants ensuring a better connection.

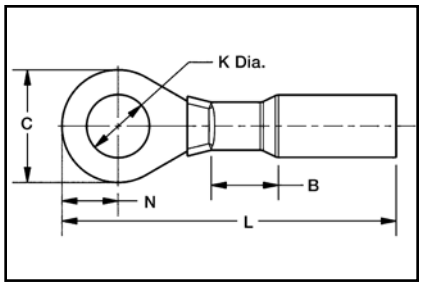

Features & Benefits

- Made from pure copper, annealed for maximum strength
- Color-coded, imprinted with wire size
- Serrated barrels offer maximum wire contact and tensile strength
- Electro tin plated for corrosion resistance
- Wire Strip Length 5/16"

Catalog No. (100/bag)	Catalog No. (20/bag)	Stud Size	Conductor Size	Dimensions						Installation Tooling	Wire Strip Length
				B	C	K	L	N	Tongue Thickness		
YHSA18K6	YHSA18K6RK	4-6	22-18 AWG	0.22	0.29	0.14	1.18	0.14	0.03	MR22	5/16
YHSA18K8	YHSA18K8RK	6-8	22-18 AWG	0.22	0.32	0.17	1.18	0.17	0.03	MR22	5/16
YHSA18K10	YHSA18K10RK	8-10	22-18 AWG	0.22	0.32	0.20	1.18	0.33	0.03	MR22	5/16
YHSA18K14	YHSA18K14RK	1/4	22-18 AWG	0.22	0.47	0.27	1.40	0.38	0.03	MR22	5/16
YHSA18K516	YHSA18K516RK	5/16	22-18 AWG	0.22	0.47	0.33	1.40	0.23	0.04	MR22	5/16
YHSA18K38	YHSA18K38RK	3/8	22-18 AWG	0.22	0.56	0.40	1.45	0.28	0.03	MR22	5/16
YHSA14K6	—	4-6	16-14 AWG	0.22	0.30	0.14	1.18	0.15	0.04	MR22	5/16
YHSA14K8	YHSA14K8RK	6-8	16-14 AWG	0.22	0.32	0.17	1.18	0.16	0.03	MR22	5/16
YHSA14K10	YHSA14K10RK	8-10	16-14 AWG	0.22	0.32	0.20	1.18	0.17	0.03	MR22	5/16
YHSA14K14	YHSA14K14RK	1/4	16-14 AWG	0.22	0.47	0.26	1.40	0.23	0.03	MR22	5/16
YHSA14K516	—	5/16	16-14 AWG	0.22	0.47	0.33	1.35	0.23	0.04	MR22	5/16
YHSA14K38	YHSA14K38RK	3/8	16-14 AWG	0.22	0.56	0.40	1.45	0.28	0.03	MR22	5/16
YHSA10K6	—	4-6	12-10 AWG	0.22	0.34	0.14	1.15	0.17	0.04	MR22	5/16
YHSA10K8	—	6-8	12-10 AWG	0.22	0.34	0.17	1.15	0.17	0.04	MR22	5/16
YHSA10K10	YHSA10K10RK	8-10	12-10 AWG	0.22	0.34	0.20	1.15	0.18	0.04	MR22	5/16
YHSA10K14	YHSA10K14RK	1/4	12-10 AWG	0.22	0.56	0.26	1.45	0.15	0.04	MR22	5/16
YHSA10K516	—	5/16	12-10 AWG	0.22	0.56	0.34	1.45	0.28	0.04	MR22	5/16
YHSA10K38	YHSA10K38RK	3/8	12-10 AWG	0.22	0.56	0.40	1.45	0.28	0.04	MR22	5/16
YHSA10K12	YHSA10K12RK	1/2	12-10 AWG	0.22	0.69	0.53	1.69	0.36	0.04	MR22	5/16

Blue highlighted items are industry standard and most frequently ordered.

TYPE YAES-K

INSULUG™

200 MEGARADS, –60° THROUGH 150° C, 600 VOLTS

The type YAES-K, radiation resistant insulated terminals are designed and have been tested to meet the requirements for class 1E critical circuits as set by the Nuclear Regulatory Commission (NRC). Additional testing for compatibility under loss of coolant accident (LOCA) conditions with cross-link polyethylene (XLP) and HYPALON® insulations was completed successfully. Compatibility with ethylene propylene rubber (EPR) insulation was determined by analysis. Each terminal is manufactured of pure electrolytic copper per QQ-C 576 and bright tin-plated per MIL-T-10727 and meets or exceeds MIL-T-7928 using stranded copper AWG wire. The KYNAR® insulation offers 200 megarad radiation resistance.

The Type YAES-K radiation resistant insulated terminals are suitable for class 1E critical circuits and non-critical nuclear associated applications.

KYNAR - is a registered trademark of the Pennwalt Corp. for Polyvinylindene Floride (PVF_2)
HYPALON - Is a registered trademark of the E.I. DuPont deNemours & Co., Inc.

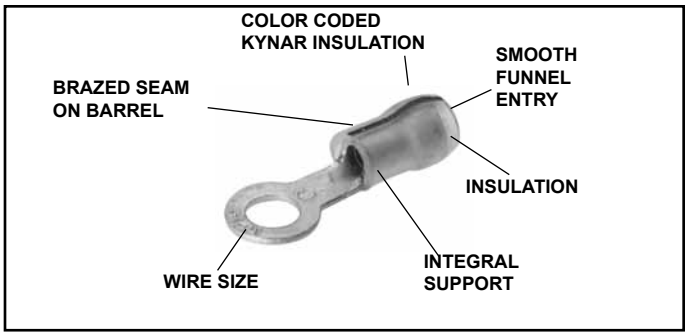

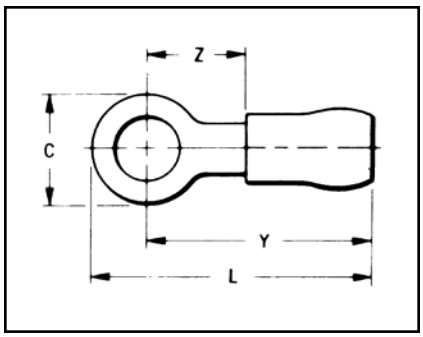

Features & Benefits

- Insulation provides 200 megarad radiation resistance plus successfully tested for insulation compatibility
- An integral one-piece copper barrel/ insulation grip and wire strain relief design
  - ◊ Provides improved physical strength characteristics over a multi-piece design.
- The insulation is locked in place
  - ◊ The insulation will not move or twist off, thereby maintains proper dielectric values.
- Manufactured from pure electrolytic copper
  - ◊ Provides maximum conductivity, low resistance and ductility for excellent crimp forming properties.
- Bright tin-plated per MIL-T-10727
  - ◊ Provides durable long-lasting resistance to corrosion.
- Deep inner barrel serrations
  - ◊ Provides excellent electrical conductivity and tensile strength values.
- Brazed seam
  - ◊ Provides a stronger barrel design to minimize any possible splitting and eliminates folding.
- Smooth funnel entry
  - ◊ Easy wire insertion.
- Color coded terminals
  - ◊ Provides easy wire size identification and inspection.
- Coded raised dots in the die area of the connection after compression
  - ◊ Provides visual identification that the correct tool and die were used for proper installation.
- Inspection hole
  - ◊ Permits visual check for proper wire insertion.
- Ring tongue design
  - ◊ Provides a secure termination under screw head that cannot be removed without the complete removal of the screw.
- Multiple terminals may be stacked on a common stud easily
  - ◊ Provides flexibility and versatility.

TYPE YAES-K
(Continued)

INSULUG™

200 MEGARADS, –60° THROUGH
150° C, 600 VOLTS

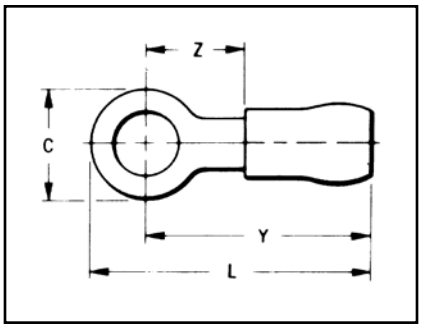

Catalog Number	Stud Size	Conductor Size	Dimensions				Installation Tooling	Wire Strip Length
			C	L Max.	Y Max.	Z Max.		
YAES18K1	#6	22-18 AWG str. Max. Insul. Dia. Accom.: 0.12 Color Code: Red	0.23	0.76	0.64	0.20	Ratchet Tool: MR10G6 Crimp Mark: (1) Small Dot Red Groove Calibration Gauge: PG-373-1	7/32"
YAES18K2	#6		0.25	0.87	0.74	0.29		
YAES18K49	#8		0.32	0.91	0.76	0.29		
YAES18K3	#10		0.32	0.91	0.76	0.29		
YAES18K50	1/4		0.46	1.09	0.86	0.41		
YAES18K4	5/16		0.46	1.09	0.87	0.41		
YAES18K5	3/8		0.54	1.17	0.91	0.45		
YAES14K6	#6	16-14 AWG str. Max. Insul. Dia. Accom.: 0.15 Stock Thickness: 0.03 Color Code: Blue	0.26	0.77	0.65	0.22	Ratchet Tool: MR10G6 Crimp Mark: (2) Small Dots Blue Groove Calibration Gauge: PG-371-1	7/32"
YAES14K7	#6		0.32	0.91	0.76	0.29		
YAES14K53	#8		0.32	0.91	0.76	0.29		
YAES14K8	#10		0.32	0.91	0.76	0.29		
YAES14K54	1/4		0.46	1.09	0.86	0.41		
YAES14K9	5/16		0.46	1.09	0.86	0.41		
YAES14K10	3/8		0.53	1.18	0.91	0.45		
YAES10K11	#6	12-10 AWG str. Max. Insul. Dia. Accom.: 0.21 Stock Thickness: 0.04 Color Code: Yellow	0.38	1.12	0.94	0.26	Ratchet Tool: MR10G6 Crimp Mark: (1) Large Dot Calibration Gauge: PG-372-1	3/8"
YAES10K11T1	#6		0.31	1.09	0.94	0.26		
YAES10K56	#8		0.38	1.12	0.94	0.26		
YAES10K12	#10		0.38	1.12	0.94	0.26		
YAES10K57	1/4		0.54	1.32	1.06	0.37		
YAES10K13	5/16		0.54	1.32	1.06	0.37		
YAES10K14	3/8		0.58	1.34	1.05	0.40		
YAES10K58	1/2		0.72	1.41	1.06	0.45		

Blue highlighted items are industry standard and most frequently ordered.

TYPES YAV BOX AND YAV

HYLUG™

Seamless Uninsulated Compression Heavy Duty Ring Tongue Terminal

HYLUG™ type YAV is a seamless, heavy duty uninsulated compression ring tongue terminal manufactured from pure electrolytic copper tubing and is for use on copper commercial (code) cable, type AN aircraft cable and extra flexible conductors. Because of its seamless design, the YAV HYLUG™ also accommodates solid conductors.

The seamless tubing produces a double thick tongue and a strong connector for demanding applications that require high reliability. Applications include industrials, hospitals, electric utilities, aircraft, shipboard and marine, computers, steel mills, mining equipment and other equipment that is subject to vibration or requiring dependable electrical performance.

The YAV HYLUG™ terminals meet the requirements of SAE-AS7928.

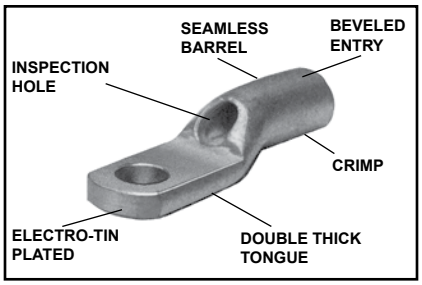

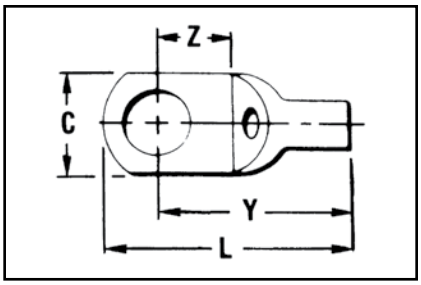

Features & Benefits

- Manufactured from seamless pure electrolytic copper tubing
- Provides maximum conductivity, low resistance and excellent ductility for crimping
- Seamless tubular crimp barrel design
- No seams to split resulting in a very high quality electrical connection, also can be used on solid conductor
- Double thick tongue
- Provides a very strong terminal tongue
- Produced from tubular copper
- Extra copper material assures the compression connector will operate cooler than the conductors it connects
- Internally bevelled barrel
- Provides easy cable entry, especially for flexible conductors
- Inspection hole
- Provides easy visual check for proper conductor insertion
- Electro-tin plated
- Provides long lasting durable corrosion resistance
- Nickel plating available, add "NK" suffix
- Nickel plated HYLUG™ provide high termperature applications up to 650° F continuous service and 750° F intermittent service

Catalog Number	Wire Range	Stud Size	Dimensions				Bulk Catalog Number	Installation Tooling	Wire Strip Length
			C	L Max.	Y Max.	Z Min.			
YAV18-T4BOX	22-18 Str. and Sol.	3,4	0.19	0.59	0.54	0.16	YAV18T4	Non-Ratchet: Y10D, Y10-22 Ratchet: MR8G98, MR8-9Q, Y8MRB-1, MR20, MRE1022B	9/32"
YAV18-L33BOX		4-6	0.25	0.63	0.55	0.18	YAV18L33		
YAV18-T5BOX			0.31	0.76	0.61	0.24	YAV18T5		
YAV18-T1BOX		6-8					YAV18T1		
YAV18BOX		8-10					YAV18		
YAV14-L33BOX	20-14 Str. 20-12 Sol.	4-6	0.25	0.67	0.59	0.18	YAV14L33		
YAV14-T5BOX			0.31	0.79	0.64	0.24	YAV14T5		
YAV14-T1BOX		6-8					YAV14T1		
YAV14-L36BOX		8-10	0.29	0.70	0.59	0.18	YAV14L36		
YAV14BOX				0.79	0.64	0.24	YAV14		
YAV14-T2BOX		1/4	0.40	0.99	0.75	0.32	YAV14T2		
YAV14-T3BOX		5/16	0.44				YAV14T3		
YAV12-G2BOX ■	† 14-12 Str.	8-10	0.30	0.78	0.67	0.24	YAV12G2	Y10D, Y8MRB-1, M8ND w/N14HT	
YAV12-G3BOX ■		1/4	0.34	1.00	0.76	0.33	YAV12G3		
YAV10-T7BOX	14 Str. 12-10 Str. and Sol.	4-6	0.28	0.93	0.78	0.24	YAV10T7*	Non-Ratchet: Y10D, Y10-22 Ratchet: MR8G98, MR8-9Q, Y8MRB-1, MR20, N10HT, N10HT-24, MRE1022B	7/16"
YAV10-T11BOX		6-8	0.38		0.79	0.26	YAV10T11		
YAV10-L36BOX		8-10	0.29	0.86	0.71	0.23	YAV10L36		
YAV10BOX			0.36	0.97	0.79	0.25	YAV10*		
YAV10-T3BOX		1/4	0.45	1.10	0.87	0.32	YAV10T3		
YAV10-T2BOX		5/16	0.53	1.13		0.31	YAV10T2*		
YAV10-T4BOX		3/8		1.20	0.88	0.36	YAV10T4*		
YAV9C-L36BOX	10-9 Str.	8-10	0.31	0.94	0.83	0.15	YAV9CL36	Ratchet: MR8-9Q, Y8MRB-1	
YAV9C-T9BOX		1/4	0.44	1.15	0.95	0.31	YAV9CT9		
YAV9C-T4BOX		5/16	0.52	1.23	1.02	0.36	YAV9CT4		

■ Use #14 groove
† UL Listed for 14 Str. to #10 Sol. & Str. when installed with MR8G98 and Y8MRB-1 tools only.
* Class 1 & 2 connectors

Blue highlighted items are industry standard and most frequently ordered.

TYPES YAV-L BOX AND YAV-L

HYLUG™

Large Size Uninsulated Compression Terminals Seamless Uninsulated Compression Ring Tongue Terminal

#8-4/0 Str. Copper

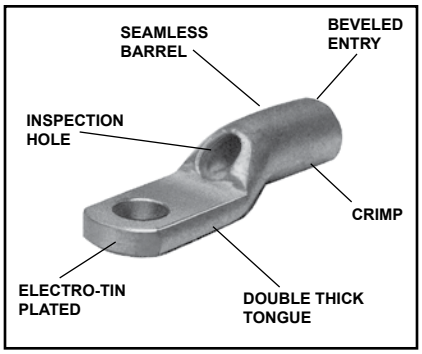

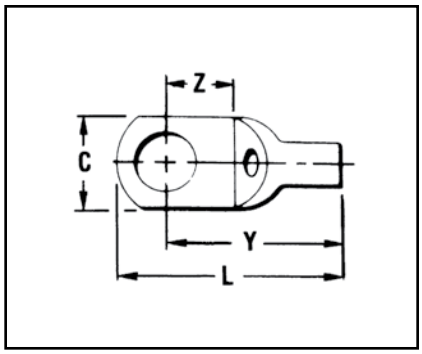

HYLUG™ Type YAV is a seamless, heavy duty uninsulated compression terminal manufactured from electrolytic copper and is for use on Type AN aircraft cable, extra flexible conductors and commercial (code) conductors. The seamless tubing produces a double thick tongue and seamless barrel design provides a strong connector for demanding applications requiring high reliability.

Applications include aircraft, industrials, hospitals, electric utilities, marine, computers, and other equipment subject to vibration or requiring dependable electrical performance. The YAV HYLUG™ terminals meet the requirements of SAE-AS7928 and are listed per AS20659 for use with copper aircraft cable per MIL-W-5086

The benefits of YAV-L connectors are the same as YAV connectors for stranded conductors.

Catalog Number	Wire Range (AWG/kcmil)	Stud Size	SAE - AS20659 Dash No. †	Dimensions (Inches)				Bulk Catalog Number	Installation Tooling				Wire Strip Length
				C	L Max.	Y Max.	Z Max.		HYTOOL™ ■	Die Index	HYPRESS™ Y29B, Y29NC	HYPRESS™ Y35, Y39, Y750 ▲	
YAV8C-LBOX	8 Aircraft AN 8 Flex	8-10	-107	0.41	1.15	0.94	0.28	YAV8C-L●	Non-Ratchet: MY29-11 Ratchet: MR4C, MR8-9Q, Y8MRB-1, M8ND w/ N8CT Die Set	38	DV8L-1 Nest Y29PL Indentor (1) Crimp	UV8L Nest Y34PL Indentor (1) Crimp	1/2"
YAV8C-L1BOX		1/4	-141	0.46	1.22	0.99	0.32	YAV8C-L1●					
YAV8C-L2BOX		5/16	-108	0.57	1.30	1.01	0.34	YAV8C-L2					
YAV8C-L3BOX		3/8	-129	0.57	1.30	1.01	0.34	YAV8C-L3●					
YAV8C-L4BOX		1/2	-142	0.73	1.52	1.14	0.48	YAV8C-L4●					
YAV6C-L1BOX	5 & 6 Aircraft AN 5 & 6 Flex	8-10	-130	0.46	1.31	1.06	0.29	YAV6C-L1●	Non-Ratchet: MY28, MY29-11 Ratchet: MR4C	39	DV6L Nest Y29PL Indentor (1) Crimp	UV6L Nest Y34PLA Indentor (1) Crimp	1/2"
YAV6C-LBOX		1/4	-109	0.50	1.28	1.06	0.29	YAV6C-L●					
YAV6C-L4BOX		5/16	-131	0.58	1.43	1.13	0.35	YAV6C-L4●					
YAV6C-L2BOX		3/8	-110	0.60	1.43	1.13	0.36	YAV6C-L2●					
YAV6C-L10BOX		1/2	-143	0.74	1.64	1.26	0.49	YAV6C-L10					
YAV4C-L3BOX	4 Aircraft AN 4 Flex	8-10	-144	0.55	1.37	1.11	0.28	YAV4C-L3●	Non-Ratchet: MY28, MY29-11 Ratchet: MR4C	40	DV4L Nest Y29PL Indentor (1) Crimp	UV4L Nest Y34PLA Indentor (1) Crimp	1/2"
YAV4C-LBOX		1/4	-111	0.55	1.37	1.11	0.28	YAV4C-L					
YAV4C-L4BOX		5/16	-132	0.63	1.48	1.17	0.33	YAV4C-L4●					
YAV4C-L2BOX		3/8	-112	0.63	1.48	1.17	0.33	YAV4C-L2●					
YAV4C-L5BOX		1/2	-145	0.73	1.68	1.30	0.47	YAV4C-L5					
YAV2C-L1BOX	2 Aircraft AN 2 Flex	1/4	-113	0.69	1.72	1.37	0.35	YAV2C-L1●	Non-Ratchet: MY28, MY29-11	41	DV2L Nest Y29PL Indentor (1) Crimp	UV2L Nest Y34PLA Indentor (1) Crimp	5/8"
YAV2C-L2BOX		5/16	-147	0.69	1.72	1.37	0.35	YAV2C-L2●					
YAV2C-LBOX		3/8	-114	0.69	1.72	1.37	0.35	YAV2C-L●					
YAV2C-L4BOX		1/2	-133	0.77	1.88	1.49	0.46	YAV2C-L4					

† Class 1.
● Available in (90°) right angle design. Suffix "RS" Replaces Suffix "L".
▲ Use Y35P3 Indentor Adapter with Y35 and Y39 Tool.

■ Bench Mount Adapter - Cat. BMY-BCH-MT is available for Type "MY" HYTOOLS™.

Add "NK" sufix for nickel plated HYLUGs™ for high temperature applications up to 650° F continuous service and 750° intermittent service.

Blue highlighted items are industry standard and most frequently ordered.

TYPES YAV-L BOX AND YAV-L (Continued)

HYLUG™

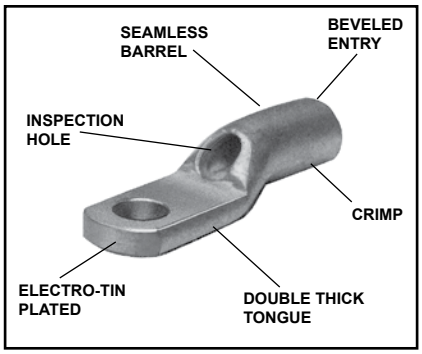

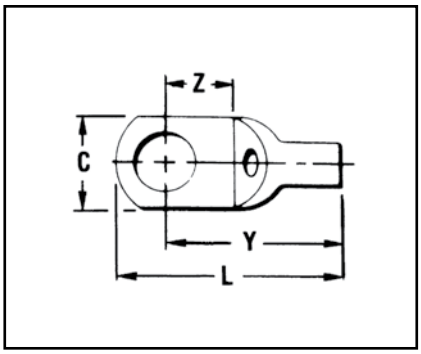

Catalog Number	Wire Range (AWG/kcmil)	Stud Size	SAE - AS20659 Dash No. †	Dimensions (Inches)				Bulk Catalog Number	Installation Tooling				Wire Strip Length
				C	L Max.	Y Max.	Z Max.		■ HYTOOL™	Die Index	HYPRESS™ Y29B, Y29NC	HYPRESS™ Y35, Y39, Y750 ▲	
YAV1C-L1BOX	1 Aircraft AN 1 Flex	1/4	-115	0.76	1.84	1.45	0.38	YAV1C-L1 ●	Non-Ratchet: MY28, MY29-11	42	DV1L Nest Y29PL Indentor (1) Crimp	UV1L Nest Y34PLA Indentor (1) Crimp	5/8"
YAV1C-L2BOX		5/16	-149	0.76	1.84	1.45	0.38	YAV1C-L2 ●					
YAV1C-LBOX		3/8	-116	0.76	1.84	1.45	0.38	YAV1C-L					
YAV1C-L3BOX		1/2	-134	0.86	1.97	1.54	0.46	YAV1C-L3					
YAV25-L1BOX	1/0 Aircraft AN 1/0 Flex	1/4	-117	0.83	2.01	1.61	0.43	YAV25-L1		43	DV25L Nest Y29PR Indentor (1) Crimp	UV25L Nest Y34PA Indentor (1) Crimp	11/16"
YAV25-L2BOX		5/16	-151	0.83	2.03	1.61	0.43	YAV25-L2					
YAV25-LBOX		3/8	-118	0.83	2.03	1.61	0.43	YAV25-L ●					
YAV25-L3BOX		1/2	-135	0.88	2.09	1.64	0.46	YAV25-L3 ●					
YAV25-L4BOX		5/8	—	0.88	2.31	1.80	0.62	YAV25-L4					
YAV26-L1BOX	2/0 Aircraft AN 2/0 Flex	1/4	-153	0.93	2.32	1.85	0.48	YAV26-L1		44	DV26L Nest Y29PR Indentor (1) Crimp	UV26L Nest Y34PA Indentor (1) Crimp	13/16"
YAV26-L2BOX		5/16	-119	0.93	2.32	1.85	0.48	YAV26-L2					
YAV26-LBOX		3/8	-120	0.93	2.32	1.85	0.48	YAV26-L ●					
YAV26-L3BOX		1/2	-136	0.93	2.32	1.85	0.48	YAV26-L3 ●					
YAV26-L12BOX		5/8	—	0.93	2.52	1.99	0.62	YAV26-L12					
YAV27-LBOX	3/0 Aircraft AN 3/0 Flex	3/8	-121	1.03	2.45	1.93	0.52	YAV27-L ●		45	—	UV27L Nest Y34PA Indentor (1) Crimp	13/16"
YAV27-L1BOX		1/2	-122	1.03	2.45	1.93	0.52	YAV27-L1					
YAV27-L15BOX		5/8	—	1.03	2.60	2.03	0.62	YAV27-L15					
YAV28-LBOX	4/0 Aircraft AN 4/0 Flex	3/8	-123	1.12	2.72	2.16	0.60	YAV28-L		46	—	UV28L Nest Y34PA Indentor (1) Crimp	7/8"
YAV28-L12BOX		1/2	-124	1.12	2.72	2.16	0.60	YAV28-L12					
YAV28-L13BOX		5/8	-159	1.12	2.72	2.16	0.60	YAV28-L13					
YAV28-L14BOX		3/4	-160	1.23	2.95	2.33	0.78	YAV28-L14					

† Class 1.
● Available in (90°) right angle design. Suffix "RS" Replaces Suffix "L".
▲ Use Y35P3 Indentor Adapter with Y35 and Y39 Tool.

■ Bench Mount Adapter - Cat. BMY-BCH-MT is available for Type "MY" HYTOOLS™.
Add "NK" sufix for nickel plated HYLUGs™ for high temperature applications up to 650° F continuous service and 750° intermittent service.

Blue highlighted items are industry standard and most frequently ordered.

TYPES YAV-H BOX AND YAV-H

HYLUG™

Seamless Uninsulated Compression Ring Tongue Terminal With Shroud

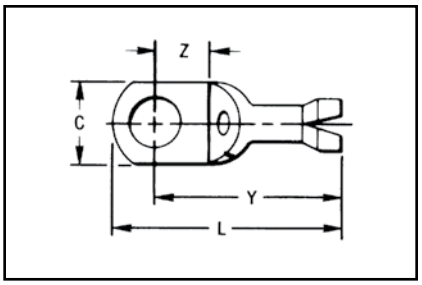

The type YAV-H HYLUG™ is a seamless heavy duty uninsulated compression ring tongue terminal with a shroud for an insulation grip and cable support. They are manufactured from pure electrolytic copper tubing for use on copper commercial (code) cable, Type AN aircraft cable and extra flexible conductors.

The seamless design produces a double thick tongue and the seamless barrel provides a strong highly reliable connection. Meets the requirements of SAE-AS7928. The benefits of the Type YAV apply to the YAV-H HYLUG™.

Features & Benefits

- Shroud/insulation grip cable support and strain relief
  - ◊ Protects the wire against breaking under vibration or flexing conditions
- Electro-tin plated
  - ◊ Provides long-lasting corrosion resistance

Catalog Number	Wire Range (AWG/kcmil)	Stud Size	Max. Insul. Dia. Accom.	Dimensions				Bulk Catalog Number	Installation Tooling	Dies	Wire Strip Length
				C	L Max.	Y Max.	Z Min.				
YAV18-HBOX	22-18	8 - 10	0.120"	0.31	0.88	0.76	0.24	**YAV18H**	Plier: Y10D, Y10-22* Ratchet: MR8-G98, MR8-9Q, Y8MRB-1*, MR20, M8ND, MRE1022B	M8ND, with N14HT, N14HT-5 Die	9/32"
YAV14-H1BOX	16-14	6 - 8	0.150"	0.31	0.92	0.80	0.24	**YAV14H1**			9/32"
YAV14-HBOX	20-14	8 - 10	0.150"	0.31	0.95	0.80	0.24	**YAV14H**			9/32"
YAV14-H2BOX		1/4		0.42	1.14	0.90	0.32	**YAV14H2**			
YAV10-H25BOX	12-10	6 - 8	0.192"	0.31	1.00	0.90	0.24	**YAV10H25**		M8ND, N10HT-24	7/16"
YAV10-HBOX		8 - 10		0.38	1.05	0.91	0.24	**YAV10H**			
YAV10-H3BOX		1/4		0.47	1.22	0.99	0.32	**YAV10H3**			

* For conductor crimp only.

Blue highlighted items are industry standard and most frequently ordered.

TYPES YAEV AND YAEV-L

INSULUG™

Terminal — Nylon Insulated — Ring-Tongue

300 Volts Max., 105° C Max.

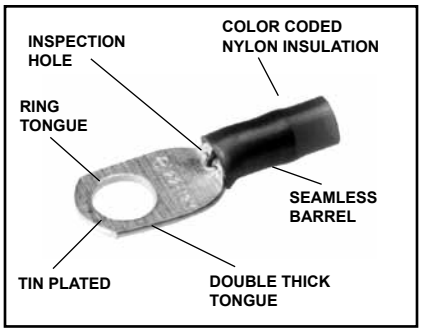

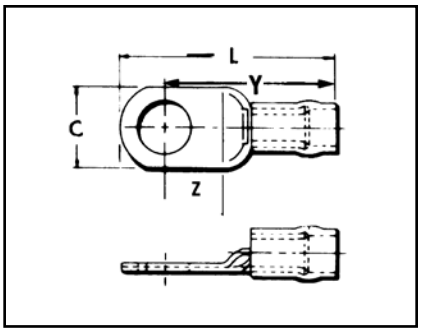

The INSULUG™ type YAEV is designed for very demanding high vibration applications encountered in aircraft and aboard ships as well as motor lead applications in hospitals, industrials and generating plants. The nylon insulated seamless, electrolytic copper barrel with double thick tongue provides an extra strong insulated connection. The terminal is rated 105°C and meets MIL-T-7928 requirements.

Features & Benefits

- Double thick tongue.
  ◊ Provides maximum reliability and electrical capacity plus an extra strong terminal tongue.
- Manufactured from one-piece pure electrolytic copper.
  ◊ Provides high conductivity, low resistance with no seams to split plus ductility for excellent crimp forming properties.
- Electro-tin plated.
  ◊ Provides long-lasting corrosion resistance.
- Nylon insulation is locked in place.
  ◊ Insulation will not move or twist off
- 300 volt nylon insulation.
  ◊ High dielectric strength and stability in demanding oily environmental conditions.
- Color Coded.
  ◊ Provides quick, easy wire size connector selection.

Catalog Number	Wire Range AWG, AN Aircraft	Stud Size	Dimensions				Bulk Catalog Number	Installation Tooling	Wire Strip Length
			C	Z Min.	Y Max.	L Max.			
YAEV18BOX	22-18 Max. Insul. Dia. Accom.: .125 Color Code: Red	8-10	0.31	0.24	0.77	0.91	**YAEV18**	Ratchet: MR8D94, MRE1022NV	1/4"
YAEV14BOX	18-14 Max. Insul. Dia. Accom.: .154 Color Code: Blue	8-10	0.31	0.24	0.81	0.94	**YAEV14**	Ratchet: MR8D94, MRE1022NV	1/4"
YAEV10-T7BOX	12-10 Max. Insul. Dia. Accom.: .209 Color Code: Yellow	4-6	0.30	0.24	0.95	1.12	**YAEV10-T7**	Ratchet: MR8D94 MR8-33-T1 M8ND with N10ET-9 Die MR4 10M MRE1022NV	5/16"
YAEV10-T11BOX		6-8	0.37	0.26	0.97	1.16	**YAEV10-T11**		
YAEV10BOX		8-10	0.37	0.26	0.97	1.16	**YAEV10**		
YAEV10-L36BOX		8-10	0.30	0.18	0.89	1.04	**YAEV10-L36**		
YAEV10-T3BOX		1/4	0.47	0.38	1.12	1.30	**YAEV10-T3**		
YAEV10-T2BOX		5/16	0.53	0.31	1.12	1.36	**YAEV10-T2**		
YAEV10-T4BOX		3/8	0.56	0.35	1.12	1.38	**YAEV10-T4**		

Blue highlighted items are industry standard and most frequently ordered.

TYPES YAEV AND YAEV-L

(Continued)

INSULUG™

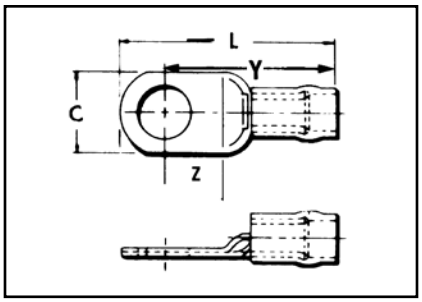

Catalog Number	Wire Range AWG, AN Aircraft	Stud Size	AS25036-No.	Dimensions				Bulk Catalog Number	Installation Tooling	HYPRESS™ Y29NC		Wire Strip Length
				C	Z Min.	Y Max.	L Max.			Nest	Indentor	
YAEV8C-L14BOX	8 Str. Max. Insul. Dia. Accom.: .258 Color Code: Red	8	—	0.41	0.28	1.18	1.40	**YAEV8C-L14**	Ratchet: M8ND with N8CET-2 Die Non-Ratchet: MY28-6* Hydraulic: Y35, Y39 with U8CET Die Set	DEV8L	Y29PLE-1 Y29PLE-1	7/16"
YAEV8C-L1BOX		1/4	-115	0.46	0.32	1.23	1.47	**YAEV8C-L1**				
YAEV8C-L2BOX		5/16	-116	0.57	0.34	1.25	1.54	**YAEV8C-L2**				
YAEV8C-L3BOX		3/8	-117	0.57	0.34	1.25	1.54	**YAEV8C-L3**				
YAEV8C-L4BOX		1/2	-118	0.73	0.48	1.39	1.77	**YAEV8C-L4**				
YAEV8C-LBOX		10	—	0.41	0.28	1.18	1.40	**YAEV8C-L**				
—	6 Str. Max. Insul. Dia. Accom.: .313 Color Code: Blue	8-10	-119**	0.48	0.29	1.33	1.56	**YAEV6C-L1****	Non-Ratchet: MY28-6* Hydraulic: Y35, Y39 with U6CET Die Set	DEV6L		1/2"
—		1/4	-120**	0.48	0.29	1.33	1.56	**YAEV6C-L****				
—		5/16	-121**	0.60	0.36	1.39	1.68	**YAEV6C-L4****				
—		3/8	-122**	0.60	0.36	1.39	1.68	**YAEV6C-L2****				
—		1/2	—	0.73	0.47	1.53	1.91	**YAEV6C-L10**				
—	4 Str. Max. Insul. Dia. Accom.: .374 Color Code: Yellow	8-10	—	0.55	0.28	1.40	1.62	**YAEV4C-L3**	Non-Ratchet: MY28-6* Hydraulic: Y35, Y39 with U4CET Die Set	DEV4L		1/2"
—		1/4	-123	0.55	0.28	1.37	1.62	**YAEV4C-L**				
—		5/16	-124	0.63	0.34	1.43	1.74	**YAEV4C-L4**				
—		3/8	-125	0.63	0.34	1.43	1.74	**YAEV4C-L2**				
—		1/2	—	0.73	0.47	1.56	1.92	**YAEV4C-L5**				
—	2 Str. Max. Insul. Dia. Accom.: .459 Color Code: Red	10	—	0.69	0.35	1.72	2.03	**YAEV2C-L3**	Non-Ratchet: MY28-6* Hydraulic: Y35, Y39 with U2CET Die Set	DEV2L	Y29PLE Y29PLE	5/8"
—		1/4	-126	0.69	0.35	1.61	2.03	**YAEV2C-L1**				
—		5/16	—	0.69	0.35	1.68	2.03	**YAEV2C-L2**				
—		3/8	-127	0.69	0.35	1.69	2.03	**YAEV2C-L**				
—		1/2	-128	0.77	0.47	1.80	2.16	**YAEV2C-L4**				
—	1 Str. Max. Insul. Dia. Accom.: .516 Color Code: White	1/4	-129	0.76	0.38	1.63	2.14	**YAEV1C-L1**	Non-Ratchet: MY28-6* Hydraulic: Y35, Y39 with U1CET Die Set	DV26L		5/8"
—		5/16	—	0.76	0.38	1.71	2.14	**YAEV1C-L2**				
—		3/8	-130	0.76	0.38	1.72	2.14	**YAEV1C-L**				
—		1/2	-131	0.86	0.47	1.86	2.27	**YAEV1C-L3**				
—	1/0 Str. Max. Insul. Dia. Accom.: .564 Color Code: Blue	1/4	-132	0.83	0.43	1.97	2.40	**YAEV25-L1**	Non-Ratchet: MY28-6* Hydraulic: Y35, Y39 with U25ET Die Set	DEV25L		11/16"
—		5/16	—	0.83	0.43	1.97	2.40	**YAEV25-L2**				
—		3/8	-133	0.83	0.43	1.97	2.40	**YAEV25-L**				
—		1/2	-134	0.88	0.47	2.02	2.46	**YAEV25-L3**				
—		5/8	—	0.88	0.63	2.17	2.67	**YAEV25-L4**				
—	2/0 Str. Max. Insul. Dia. Accom.: .628 Color Code: Yellow	1/4	—	0.93	0.49	2.19	2.72	**YAEV26-L1**	Non-Ratchet: MY28-6* Hydraulic: Y35, Y39, Y750 with U26ET Die Set	DEV26L		13/16"
—		5/16	-135	0.93	0.49	2.19	2.72	**YAEV26-L2**				
—		3/8	-136	0.93	0.49	2.19	2.72	**YAEV26-L**				
—		1/2	-137	0.93	0.49	2.27	2.72	**YAEV26-L3**				
—												

† Additional terminal stud sizes available.
* BMY, BNCH-MT bench mount adapter available.
** **NOTE:** Add suffix "M" to cat. number to conform to AS25036 - standard for these items only (example: YAEV6C-L1M). See above. Contact BURNDY® for UL Listed products.

Blue highlighted items are industry standard and most frequently ordered.

TYPE YAEV-H

INSULUG™

Ring-Tongue Terminals

Nylon-Insulated
For Expanded Insulation

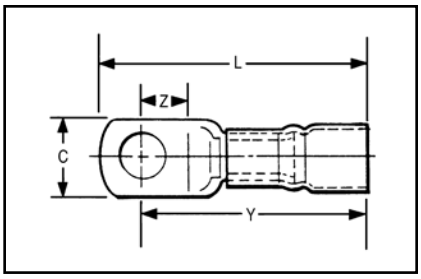

Designed to accommodate larger conductor insulation diameters. Made of one piece tin plated pure electrolytic seamless copper tubing for maximum conductivity and ductility. Color-coded insulating sleeves are locked into position. Inspection hole permits visual check of wire insertion. Meets requirements of SAE-AS7928.

Bulk Catalog Number	Wire Range	Stud Size	Dimensions in Inches				Installation Tooling			Wire Strip Length
			C	Z Min.	Y Max.	L Max.	HYTOOL™ HYPRESS™	Y29NC, Y29BH		
								Nest	Indentor	
YAEV8C-H14	8 Max. Insul. Dia.: .30" Sleeve Color: Red	8	0.41	0.25	1.32	1.53	M8ND with N8CET-2 Die My28-6* Y35, Y29 with U8CET Die	DEV8L	Y29PLE-1	7/16"
YAEV8C-H		10	0.41	0.25	1.34	1.53				
YAEV8C-H1		1/4	0.46	0.28	1.37	1.60				
YAEV8C-H2		5/16	0.57	0.33	1.39	1.68				
YAEV8C-H3		3/8	0.57	0.33	1.39	1.68				
YAEV8C-H4		1/2	0.73	0.47	1.52	1.90				
YAEV6C-H1	6 Max. Insul. Dia.: .38" Sleeve Color: Blue	10	0.48	0.28	1.48	1.72	My28-6* Y35, Y39 with U6CET Die Set	DEV6L	Y29PLE-1	1/2"
YAEV6C-H		1/4	0.48	0.28	1.48	1.72				
YAEV6C-H4		5/16	0.60	0.33	1.54	1.85				
YAEV6C-H2		3/8	0.60	0.34	1.54	1.85				
YAEV6C-H10		1/2	0.73	0.47	1.68	2.06				
YAEV4C-H3	4 Max. Insul. Dia.: .44" Sleeve Color: Yellow	10	0.55	0.28	1.60	1.86	MY28-6* Y35, Y39 with U4CET Die Set	DEV4L	Y29PLE-1	1/2"
YAEV4C-H		1/4	0.55	0.28	1.60	1.86				
YAEV4C-H4		5/16	0.63	0.34	1.66	1.98				
YAEV4C-H2		3/8	0.63	0.34	1.66	1.98				
YAEV4C-H5		1/2	0.73	0.47	1.79	2.17				
YAEV2C-H3	2 Max. Insul. Dia.: .52" Sleeve Color: Red	10	0.69	0.35	1.98	2.33	MY28-6* Y35, Y39 with U2CET Die	DEV2L	Y29PLE	5/8"
YAEV2C-H1		1/4	0.69	0.35	1.98	2.33				
YAEV2C-H2		5/16	0.69	0.35	1.98	2.33				
YAEV2C-H		3/8	0.69	0.35	1.98	2.33				
YAEV2C-H4		1/2	0.77	0.47	2.10	2.49				
YAEV1C-H1	1 Max. Insul. Dia.: .58" Sleeve Color: White	1/4	0.76	0.38	2.10	2.48	MY28-6* Y35, Y39 with U1CET Die	DV26L	Y29PLE	5/8"
YAEV1C-H2		5/16	0.76	0.38	2.10	2.48				
YAEV1C-H		3/8	0.76	0.38	2.10	2.48				
YAEV1C-H3		1/2	0.86	0.46	2.10	2.62				

* BMY BNCH-MT bench mount adapter available.

Blue highlighted items are industry standard and most frequently ordered.

TYPE YAEV-H
(Continued)

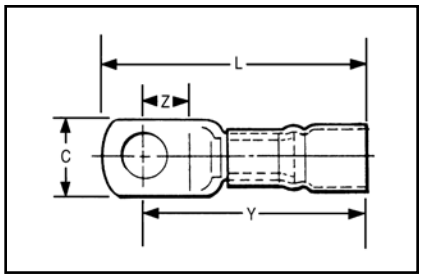

Bulk Catalog Number	Wire Range	Stud Size	Dimensions in Inches				Installation Tooling			Wire Strip Length
			C	Z Min.	Y Max.	L Max.	HYTOOL™ HYPRESS™	Y29NC, Y29BH		
								Nest	Indentor	
YAEV25-H1	1/0 Max. Insul. Dia.: .66" Sleeve Color: Blue	1/4	0.83	0.43	2.39	2.82	MY28-6* Y35, Y39 with U25ET Die Set	DEV25L	Y29PLE	11/16"
YAEV25-H2		5/16	0.83	0.43	2.39	2.82				
YAEV25-H		3/8	0.83	0.43	2.39	2.82				
YAEV25-H3		1/2	0.88	0.46	2.43	2.88				
YAEV25-H4		5/8	0.88	0.62	2.58	3.09				
YAEV26-H1	2/0 Max. Insul. Dia.: .73" Sleeve Color: Yellow	1/4	0.94	0.48	2.65	3.12	MY28-6* Y35, Y39 with U26ET Die Set	DEV26L	Y29PLE	13/16"
YAEV26-H2		5/16	0.94	0.48	2.65	3.12				
YAEV26-H		3/8	0.94	0.48	2.65	3.12				
YAEV26-H3		1/2	0.94	0.48	2.65	3.12				
YAEV26-H12		5/8	0.94	0.62	2.79	3.33				

* BMY BNCH-MT bench mount adapter available.

TYPES YAV-R, YAV-RS

HYLUG™

Heavy Duty Right-Angle Terminals

Factory formed right angle HYLUG™ connectors made of seamless pure copper tubing. These rugged terminals withstand the most severe applications. Inspection hole in barrel permits visual check of wire insertion. Tin plated to resist corrosion. Meets requirements of SAE-AS7928.

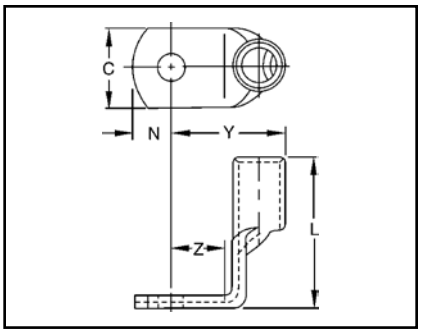

Catalog Number	Wire Range (AWG/kcmil)	Stud Size	Dimensions					Installation Tooling	Wire Strip Length
			C	L Max.	Y Max.	Z Min.	N		
YAV18-R	22-18	8-10	0.31	0.34	0.46	0.25	0.16	Non-Ratchet: Y10D Ratchet: Y8MRB-1, MR20, MR8-G98, MR8-9Q	1/4
YAV14-RL33	20-14	4-6	0.25	0.37	0.45	0.21	0.12		
YAV14-R		8-10	0.31	0.36	0.48	0.25	0.16		
YAV10-R	12-10	8-10	0.38	0.53	0.46	0.25	0.19		5/16
YAV10-R3BOX	12-10	1/4	0.47	0.55	0.50	.28	0.23		5/16

Catalog Number	Wire Range (AWG/kcmil)	Stud Size	Dimensions in Inches					Installation Tooling			Wire Strip Length	Tool ▲ Index Number
			C	L Max.	Y Max.	Z Min.	N	Ratchet, Non-Ratchet, HYTOOL™	HYPRESS™ Y29NC, Y29BH			
									Nest	Indentor		
YAV8C-RS	8	8-10	0.41	0.95	0.62	0.25	0.20	MY28 MY29-11	DV8L*	Y29PL	7/16	38
YAV8C-RS1		1/4	0.41	0.95	0.65	0.28	0.20					
YAV8C-RS3		3/8	0.56	0.95	0.71	0.34	0.31					
YAV6C-RS1	6	8-10	0.50	0.98	0.67	0.28	0.25		DV6L		1/2	39
YAV6C-RS		1/4	0.50	0.98	0.67	0.28	0.25					
YAV6C-RS4		5/16	0.59	0.98	0.73	0.34	0.31					
YAV6C-RS2		3/8	0.59	0.98	0.73	0.34	0.31					
YAV4C-RS3	4	8-10	0.53	1.00	0.70	0.28	0.25		DV4L			40
YAV4C-RS		1/4	0.53	1.00	0.70	0.28	0.25					
YAV4C-RS4		5/16	0.62	1.00	0.77	0.34	0.31					
YAV4C-RS2		3/8	0.62	1.00	0.77	0.34	0.31					
YAV2C-RS1	2	1/4	0.68	1.27	0.82	0.34	0.33		DV2L		5/8	41
YAV2C-RS2		5/16	0.68	1.27	0.82	0.34	0.33					
YAV2C-RS		3/8	0.68	1.27	0.82	0.34	0.33					
YAV1C-RS1	1	1/4	0.73	1.31	0.88	0.34	0.33		DV1L			42
YAV1C-RS2		5/16	0.73	1.31	0.88	0.34	0.33					
YAV25-RS	1/0	3/8	0.81	1.46	1.01	0.44	0.39		DV25L	Y29PR	11/16	43
YAV25-RS3		1/2	0.88	1.46	1.04	0.47	0.44					
YAV26-RS	2/0	3/8	0.92	1.58	1.00	0.47	0.39		DV26L		13/16	44
YAV26-RS3		1/2	0.92	1.58	1.00	0.47	0.39					
YAV27-RS	3/0	3/8	1.02	1.61	1.12	0.47	0.48		—	—	7/8	45
YAV28-RS	4/0	3/8	1.12	1.75	1.15	0.47	0.48					46

* For aircraft applications (Flex\ible Cable) use die DV8L-1

▲ See Present Installation Tool Index

Blue highlighted items are industry standard and most frequently ordered.

TYPES YAEV-RS

INSULUG™

Nylon-Insulated
Right-Angle Terminals

Factory formed right angle INSULUG™ connectors made of seamless pure copper tubing. These rugged terminals withstand the most severe applications. Inspection hole in barrel permits visual check of wire insertion. Meets requirements of SAE-AS7928.

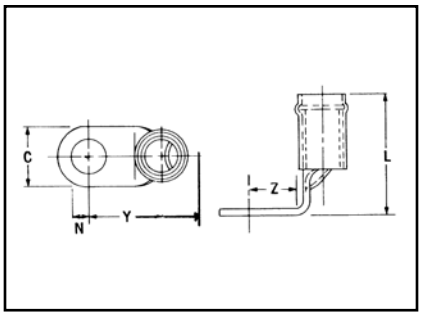

Catalog Number	Wire Range	Stud Size	N	C	Z Min.	Y Max.	L Max.	Installation Tooling			Wire Strip Length
								HYTOOL™	HYPRESS™ Y29NC, Y29BH		
									Nest	Indentor	
YAEV8C-RS	8 Max. Insul. Dia.: .258" Sleeve Color: Red	8-10	0.20	0.41	0.25	0.82	1.25	A	DEV8L	Y29PLE-1	7/16"
YAEV8C-RS1		1/4	0.25	0.41	0.28	0.84	1.25				
YAEV6C-RS1	6 Max. Insul. Dia.: .313" Sleeve Color: Blue	8-10	0.25	0.50	0.28	0.88	1.28	B	DEV6L		1/2"
YAEV6C-RS		1/4	0.25	0.50	0.28	0.88	1.28				
YAEV4C-RS	4 Max. Insul. Dia.: .374" Sleeve Color: Yellow	1/4	0.25	0.53	0.28	0.95	1.28	C	DEV4L		1/2"
YAEV4C-RS2		3/8	0.31	0.62	0.34	1.02	1.28				
YAEV2C-RS1	2 Max. Insul. Dia.: .459" Sleeve Color: Red	1/4	0.33	0.68	0.34	1.13	1.59	D	DEV2L	Y29PLE	5/8"
YAEV2C-RS		3/8	0.33	0.68	0.34	1.13	1.59				
YAEV1C-RS2	1 Max. Insul. Dia.: .516" Sleeve Color: White	5/16	0.33	0.73	0.34	1.13	1.65	E	DV26L		5/8"
YAEV1C-RS		3/8	0.33	0.73	0.34	1.22	1.65				
YAEV25-RS	1/0 Max. Insul. Dia.: .564" Sleeve Color: Blue	3/8	0.39	0.81	0.44	1.46	1.88	F	DEV25L		11/16"
YAEV26-RS	2/0 Max. Insul. Dia.: .628" Sleeve Color: Yellow	3/8	0.39	0.92	0.47	1.48	2.06	G	DEV26		13/16"

A	B	C	D	E	F	G
Ratchet: M8ND with N8CET-2 Die Non-Ratchet: MY28-6†† Hydraulic: Y35, Y39 with U8CET Die Set	Non-Ratchet: MY28-6†† Hydraulic: Y35, Y39 with U6CET Die Set	Non-Ratchet: MY28-6†† Hydraulic: Y35, Y39 with U4CET Die Set	Non-Ratchet: MY28-6†† Hydraulic: Y35, Y39 with U2CET Die Set	Non-Ratchet: MY28-6†† Hydraulic: Y35, Y39 with U1CET Die Set	Non-Ratchet: MY28-6†† Hydraulic: Y35, Y39 with U25ET Die Set	Non-Ratchet: MY28-6†† Hydraulic: Y35, Y39 with U26ET Die Set

†† BMY BNCH-MT bench mount adapter available.

Blue highlighted items are industry standard and most frequently ordered.

TYPE YAEV-RH

INSULUG™

Nylon-Insulated
Right-Angle Terminals

Designed to Accommodate Larger
Conductor Insulation Diameters

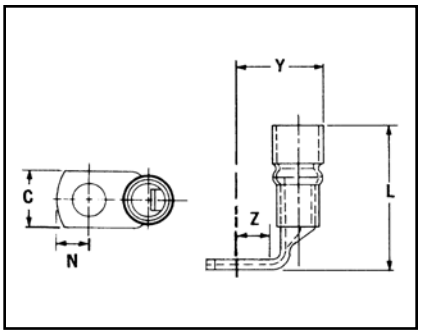

Factory formed right angle INSULUG™ connectors made of seamless pure copper tubing. These rugged terminals withstand the most severe applications. Inspection hole in barrel permits visual check of wire insertion. Tin plated to resist corrosion. Meets requirements of SAE-AS7928.

Catalog Number	Wire Range	Stud Size	N	C	Z Min.	Y Max.	L Max.	Installation Tooling			Wire Strip Length
								HYTOOL™	HYPRESS™ Y29NC, Y29BH		
									Nest	Indentor	
YAEV8C-RH	8 Max. Insul. Dia.: .30" Sleeve Color: Red	8-10	0.20	0.41	0.25	0.87	1.38	A	DEV8L	Y29PLE-1	7/16"
YAEV8C-RH1		1/4	0.25	0.41	0.28	0.90	1.38				
YAEV6C-RH1	6 Max. Insul. Dia.: .38" Sleeve Color: Blue	8-10	0.25	0.50	0.28	0.97	1.43	B	DEV6L		1/2"
YAEV6C-RH		1/4	0.25	0.50	0.28	0.97	1.43				
YAEV4C-RH	4 Max. Insul. Dia.: .44" Sleeve Color: Yellow	1/4	0.25	0.53	0.28	1.04	1.53	C	DEV4L		1/2"
YAEV4C-RH2		3/8	0.31	0.62	0.34	1.11	1.53				
YAEV2C-RH1	2 Max. Insul. Dia.: .52" Sleeve Color: White	1/4	0.33	0.67	0.34	1.22	1.88	D	DEV2L	Y29PLE	5/8"
YAEV2C-RH		3/8	0.33	0.67	0.34	1.22	1.88				
YAEV1C-RH2	1 Max. Insul. Dia.: .52" Sleeve Color: White	5/16	0.33	0.73	0.34	1.32	1.99	E	DV26L		5/18"
YAEV1C-RH		3/8	0.33	0.73	0.34	1.32	1.99				
YAEV25-RH	1/0 Max. Insul. Dia.: .66" Sleeve Color: Blue	3/8	0.39	0.81	0.44	1.50	2.29	F	DEV25L		11/16"
YAEV26-RH	2/0 Max. Insul. Dia.: .73" Sleeve Color: Yellow	3/8	0.39	0.92	0.47	1.60	2.42	G	DEV26L		13/16"

A	B	C	D	E	F	G
Ratchet: M8ND with N8CET-2 Die Non-Ratchet: MY28-6†† Hydraulic: Y35, Y39 with U8CET Die Set	Non-Ratchet: MY28-6†† Hydraulic: Y35, Y39 with U6CET Die Set	Non-Ratchet: MY28-6†† Hydraulic: Y35, Y39 with U4CET Die Set	Non-Ratchet: MY28-6†† Hydraulic: Y35, Y39 with U2CET Die Set	Non-Ratchet: MY28-6†† Hydraulic: Y35, Y39 with U1CET Die Set	Non-Ratchet: MY28-6†† Hydraulic: Y35, Y39 with U25ET Die Set	Non-Ratchet: MY28-6†† Hydraulic: Y35, Y39 with U26ET Die Set

†† BMY BNCH-MT bench mount adapter available.

Blue highlighted items are industry standard and most frequently ordered.

TYPE YBM

HYLUG™

Flag-Type
Ring-Tongue Terminals

Made of pure electrolytic copper for maximum conductivity and ductility. Seamless extrusion tin plated to resist corrosion.

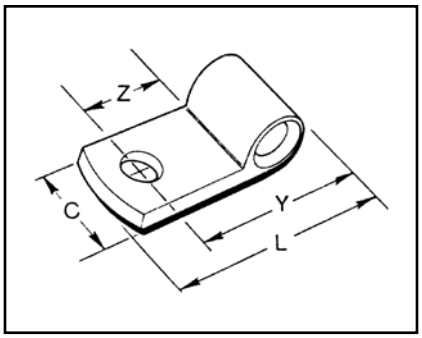

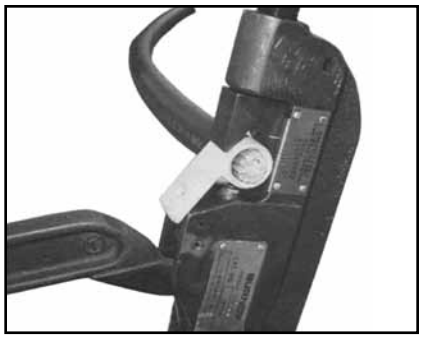

Catalog* Number	Wire Range		Stud Size	Dimensions in Inches				** HYTOOL™	**Installation Tooling		Wire Strip Length
									HYPRESS™ Y29NC, Y29B		
	Flex	Code		C	Z Min.	Y Approx.	L Max.		Nest	Indentor	
YBM8C	8 Class I, K, DLO (37/24) MIL-W-5086	8	8-10	0.47	0.33	0.59	1.01	MY28	DV8B	Y29PBL	7/16"
YBM8C-T2			1/4	0.53	0.36	0.62	1.07				1/2"
YBM8CT4			3/8	0.66	0.42	0.68	1.19				9/16"
YBM6C-L9	6 Class I, DLO (81/24) MIL-W-5086	6	8-10	0.53	0.36	0.64	1.09		DV6BL-1		1/2"
YBM6C-L			1/4	0.53	0.36	0.64	1.12				
YBM6C-L2			5/16	0.59	0.42	0.70	1.21				9/16"
YBM6C-L3			3/8	0.66	0.42	0.70	1.24				5/8"
YBM4C-L4	4 Class I, DLO (105/24) MIL-W-5086	4	8-10	0.53	0.36	0.69	1.18		DV4BL	Y29PBL	1/2"
YBM4C-L			1/4	0.53	0.36	0.69	1.21				
YBM4C-L1			5/16	0.59	0.42	0.75	1.3				9/16"
YBM4C-L2			3/8	0.66	0.42	0.75	1.33				5/8"
YBM2C-L1	2 Class I, DLO (150/24) MIL-W-5086	2	1/4	0.66	0.36	0.73	1.28		DV2BL	Y29PL	5/8"
YBM2C-L2			5/16	0.66	0.42	0.79	1.38				
YBM2C-L			3/8	0.66	0.42	0.79	1.35				
YBM1C-L3	1 Class I, DLO (225/24) MIL-W-5086	1	1/2	0.91	0.61	1.00	1.78				1"
YBM1C-L			3/8	0.66	0.49	0.88	1.53		DV1BL		5/8"
YBM25-L1	1/0 Class I, DLO (275/24) MIL-W-5086	—	1/4	0.72	0.42	0.86	1.49		DV25BL-1	Y29PR	
YBM25-L2			5/16	0.72	0.45	0.88	1.56				3/4"
YBM25-L			3/8	0.72	0.49	0.92	1.62				
YBM26-L	2/0 Class I, DLO (325/24) MIL-W-5086	—	3/8	0.84	0.49	0.98	1.71		DV26L		13/16"
YBM28-1/4	4/0 Class I, DLO (550/24) MIL-W-5086	—	1/4	0.95	0.72	1.66	2.06		DV28L		1"

* Lead Plated available, contact factory.
** See top illustration for recommended connector insertion into tools.

Blue highlighted items are industry standard and most frequently ordered.

TYPE T-F AND YAD-F

HYLUG™

Uninsulated Compression Terminal, Fork Tongue

Type T-F is constructed in the same manner as the type "T" and employs a fork tongue. The fork permits rapid installation of the terminal under a screw head without completely removing the screw. Two or more terminals may be stacked easily on a common stud.

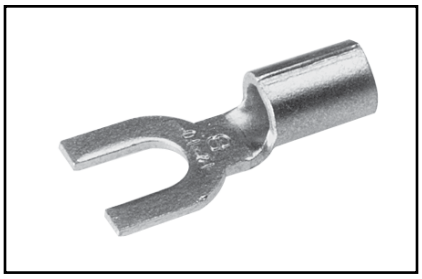

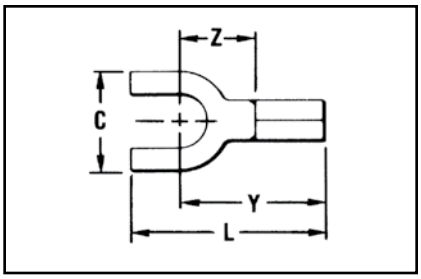

Features & Benefits

- Fork tongue design.
  ◊ Faster installation-screw needs only to be loosened for termination.

Catalog Number	Wire Range	Stud Size	C	L Max	Y Max	Z Min	Bulk Catalog Number	Installation Tooling	Wire Strip Length
T18-6F	22 AWG-18 AWG	#4 - #6	0.28	0.68	0.55	0.25	**YAD186F**	Non-Ratchet: Y10D, Y10-22 Ratchet: MRE1022B, MR8G98, Y8MRB-1, MR20	9/32
T18-8F		#6 - #8	0.31	0.74	0.57	0.27	**YAD188F**		
T18-10F		#8 - #10	0.37	0.74	0.58	0.29	**YAD1810F**		
T18-14F		1/4	0.47	0.92	0.69	0.39	**YAD1814F**		
T14-6F	20 AWG-14 AWG	#4 - #6	0.28	0.68	0.55	0.25	**YAD146F**	Non-Ratchet: Y10D, Y10-22 Ratchet: MRE1022B, MR8G98, Y8MRB-1, MR20	9/32
T14-8F		#6 - #8	0.31	0.74	0.57	0.27	**YAD148F**		
T14-10F		#8 - #10	0.37	0.74	0.58	0.29	**YAD1410F**		
T14-14F		1/4	0.47	0.92	0.69	0.39	**YAD1414F**		
T10-6F	14 AWG-10 AWG (Str.) 12 AWG-10 AWG (Sol.)	#4 - #6	0.28	0.74	0.61	0.25	**YAD106F**	Non-Ratchet: Y10D, Y10-22 Ratchet: MRE1022B, MR8G98, Y8MRB-1, MR20	11/32
T10-8F		#6 - #8	0.31	0.80	0.63	0.27	**YAD108F**		
T10-10F		#8 - #10	0.41	0.87	0.68	0.32	**YAD1010F**		
T10-14F		1/4	0.50	1.00	0.75	0.39	**YAD1014F**		

Blue highlighted items are industry standard and most frequently ordered.

TYPES TP-F AND BA-EF

VINYLUG™

Terminal - Polyvinylchloride Insulated, Fork Tongue

600 Volts Max., 105° C Max.

The Type TP-F is a fork tongue variation of the TP design and makes installation easier.

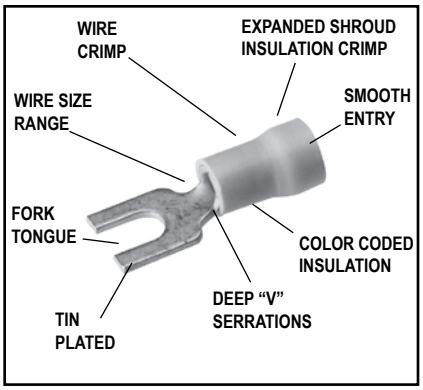

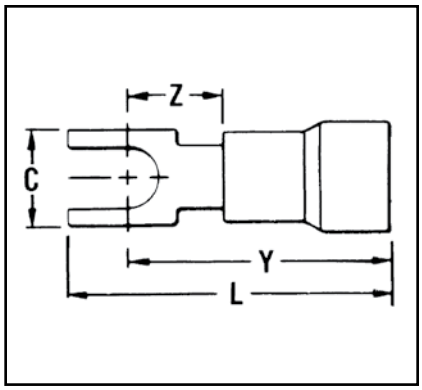

Features & Benefits

- Fork tongue design
  - ◊ Faster installation-screw needs only to be loosened for termination

Catalog Number	Wire Range	Stud Size	Dimensions C	Dimensions L. Max	Dimensions Y Max.	Dimensions Z Min.	Bulk Catalog Number •	Installation Tooling	Tape Mounted Catalog Number 2000/Reel	Installation Tooling	Wire Strip Length
TP16-2F	22 - 16 Max. Insul. Dia. Accom.: 0.15 Color Code: Red	#1-#2	0.17	0.75	0.66	0.23	BA16EF2	Plier Type: Y10-22 Ratchet Tool: MRE1022NV MR8-89-1	BA16EF2M	TFM with DFM3D-1 Die	13/64"
TP16-6F		#4-#6	0.28	0.80	0.66	0.23	BA16EF6		BA16EF6M		
TP16-8F		#6-#8	0.31	0.86	0.69	0.26	BA16EF8		BA16EF8M		
TP16-10F		#8-#10	0.41	0.95	0.75	0.31	BA16EF10		BA16EF10M		
TP14-2F	16 - 14 Max. Insul. Dia. Accom.: 0.18 Color Code: Blue	#1-#2	0.17	0.75	0.66	0.23	BA14EF2		—	TFM with DFM2D-1 Die	13/64"
TP14-6F		#3-#6	0.28	0.80	0.66	0.23	BA14EF6		—		
TP14-8F		#6-#8	0.31	0.86	0.69	0.26	BA14EF8		BA14EF8M		
TP14-10F		#8-#10	0.41	0.95	0.75	0.31	BA14EF10		BA14EF10M		
TP10-6F	12 - 10 Max. Insul. Dia. Accom.: 0.26 Color Code: Yellow	#3-#6	0.28	0.95	0.81	0.26	BA10EF6	MRE1022NV, MR15, M8ND with N10ET-23	*BA10EF6M	TFM with DFM1D5 Die	19/64"
TP10-8F		#6-#8	0.31	0.98	0.81	0.26	BA10EF8		*BA10EF8M		
TP10-10F		#8-#10	0.41	1.07	0.87	0.31	BA10EF10		*BA10EF10M		

• UL Listed and CSA Certified with MR8-89-1 and MR15 only
* 1000/Box

Blue highlighted items are industry standard and most frequently ordered.

TYPES TN-F AND YAES-F

INSULUG™

Terminal - Nylon Insulated,
Fork Tongue

600 Volts Max., 105° C Max.

The type TN-F, nylon insulated fork tongue terminal has the same high quality as the TN. It is designed to meet the heavy-duty requirements of industrial and utility applications.

Used on both power and control circuits for wire sizes #26 AWG through #10 AWG. The TN-F provides high dielectric strength and stability in oily conditions.

The TN-F is identical to the TN with the addition of a fork tongue which allows installation without complete removal of its supporting screw.

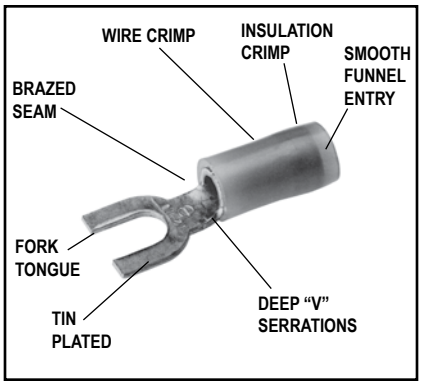

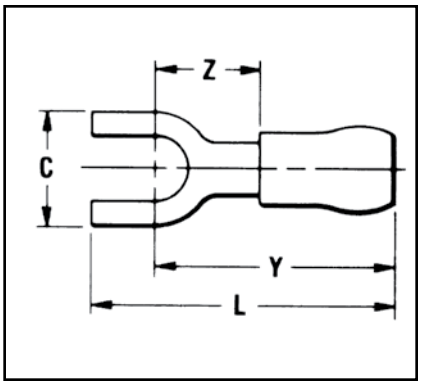

Features & Benefits

- Fork tongue
  - ◊ Provides faster and easier installation by permitting insertion under the screw head without completely removing it.

Catalog Number	Wire Range	Stud Size	Dimensions				Bulk Catalog Number	Installation Tooling	Wire Strip Length
			C	L Max.	Y Max.	Z Min.			
TN20-2F*	26-20 Max. Insul. Dia. Accom.: 0.10 Color Code: Amber	#1-#2	0.18	0.76	0.65	0.24	—	M8ND with N14HET-25V1 Die Set	3/16"
TN20-6F*		#4-#6	0.28	0.80	0.70	0.28	—		
TN184F*	22-18 Max. Insul. Dia. Accom.: 0.12 Color Code: Red	#3-#4	0.23	0.75	0.65	0.24	—	Non-Ratchet: Y10D Y1022 Ratchet: MRE1022NV MR8-83** MR18	7/32"
TN18-6F		#4 - #6	0.28	0.79	0.65	0.24	**YAES18N1F**		
TN18-8F		#6-#8	0.31	0.84	0.67	0.26	**YAES18N49F**		
TN18-10F		#8-#10	0.37	0.84	0.68	0.27	**YAES18N3F**		
TN18-14F		1/4	0.47	1.03	0.79	0.38	**YAES18N50F**		
TN14-6F	16-14 Max. Insul. Dia. Accom.: 0.15 Color Code: Blue	#4 - #6	0.28	0.79	0.65	0.24	**YAES14N6F**		7/32"
TN14-8F		#6-#8	0.31	0.84	0.67	0.26	**YAES14N53F**		
TN14-10F		#8-#10	0.37	0.84	0.68	0.27	**YAES14N8F**		
TN14-14F		1/4	0.47	1.03	0.79	0.38	**YAES14N54F**		
TN10-6F	12-10 Max. Insul. Dia. Accom.: 0.21 Color Code: Yellow	#4-#6	0.28	0.96	0.82	0.24	**YAES10N11F**		11/32"
TN10-8F		#6-#8	0.31	1.01	0.84	0.26	**YAES10N56F**		
TN10-10F		#8-#10	0.41	1.09	0.89	0.31	**YAES10N12F**		
TN10-14F		1/4	0.50	1.21	0.96	0.38	**YAES10N57F**		

* Not UL Listed or CSA Certified.
** Or other tool conforming to military specification AS25036 or AS90413

Blue highlighted items are industry standard and most frequently ordered.

TYPES YAE-N-F BOX AND YAE-N-F

INSULUG™

Terminal - Nylon Insulated, Fork Tongue

Multi-Finger Insulation Grip

600 Volts Max. 105° C Max.

INSULUG™ type YAE-N-F nylon insulated terminals are designed with a Multi-Finger Insulation grip, are rated 105° C and are supplied with a fork tongue for easy terminal insertion and removal.

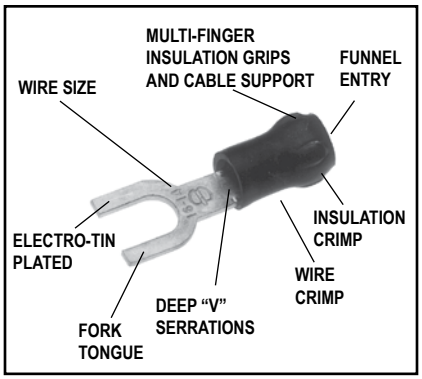

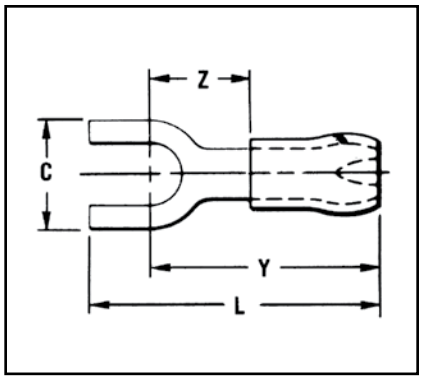

Features & Benefits

- Fork tongue
  - ◊ Permits rapid easy installation of the terminal under the screw head without complete removal of the screw

Catalog Number	Wire Range	Stud Size	Dimensions C	Dimensions L Max.	Dimensions Y Max.	Dimensions Z Min.	Bulk Catalog Number	Installation Tooling **	Tape Mounted Catalog Number 2000/Reel	Installation Tooling	Wire Strip Length
YAE22N65FBOX*	24 - 20 Max. Insul. Dia.: 0.10" Sleeve Color: Amber	#2	0.18	0.73	0.63	0.22	YAE22N65F	Ratchet: M8ND N14HET25V1 Die	YAE22N65FM	TFM with DFM11D1 Die	5/32"
YAE22N66FBOX*		#4 - #6	0.28	0.80	0.67	0.27	YAE22N66F		YAE22N66FM		
YAE18N60FBOX*	22 - 16 Max. Insul. Dia.: 0.13" Sleeve Color: Red	#4	0.21	0.92	0.73	0.24	YAE18N60F	Non-Ratchet: Y10D or Y1022 Ratchet:MRE1022NV, MR8-33T-1, M8ND with one of the following dies: N14HET-25V1, N10ET-9, N14HET-15, N10ET-23	YAE18N60FM	TFM with DFM10D1 Die	3/16"
YAE18G43FBOX		#4 - #6	0.25	0.78	0.68	0.18	YAE18G43F	Non-Ratchet: Y10D or Y1022 Ratchet: MR8-33T-1, M8ND with one of the following dies: N14HET-25V1, N10ET-9, N14HET-15, N10ET-23	YAE18G43FM		3/16"
YAE18N56FBOX†		#4 - #6	0.28	0.82	0.71	0.21	YAE18N56F		—		
YAE18N57FBOX		#6 - #8	0.31	0.96	0.77	0.28	YAE18N57F		YAE18N57FM		
YAE18N58FBOX		#8	0.36	1.02	0.82	0.33	—		—	—	
YAE14N76FBOX	16 - 14 Max. Insul. Dia.: 0.16" Sleeve Color: Blue	#4 - #6	0.28	0.85	0.74	0.25	YAE14N76F		—	—	
YAE14N77FBOX		#6 - #8	0.31	0.96	0.77	0.29	YAE14N77F		YAE14N77FM	TFM with DFM9D1 Die	
YAE14N78FBOX		#8 - #10	0.36	1.01	0.79	0.20	YAE14N78F		YAE14N78FM		
YAE10N80FBOX*	12 - 10	#4 - #6	0.35	1.02	0.67	0.29	—	Non-Ratchet: Y10D, Y10-22 Ratchet: MRE1022NV, MR8-33-T1, M8ND with one of the following dies: N14HET25V1, N10ET-9, N14ET-15, N10ET-23	—	—	3/8"
YAE10N81FBOX*		#6 - #8	0.35	1.02	0.67	0.29	—		—	—	
YAE10N82FBOX*		#10 - #9	0.37	1.02	0.65	0.29	—		—	—	
YAE10N83FBOX		1/4	0.50	1.20	0.70	0.29	—		—	—	

* Not UL Listed or CSA Certified.

† Not UL Listed; is CSA Certified.

** For UL Listed applications, consult BURNDY® factory.

Blue highlighted items are industry standard and most frequently ordered.

TYPE YHSA-F

HYDENT™ HEAT SHRINK FORK TONGUE TERMINALS

For Use on Copper Conductor

Standard crimp terminals leave the wire exposed allowing in moisture or other contaminants which can result in corrosion. Corrosion reduces the amount of current the wire can carry safely. The integrity of the electrical system can be compromised when unsealed electrical connections are utilized. Heat shrink terminals provide a durable seal blocking out contaminants ensuring a better connection.

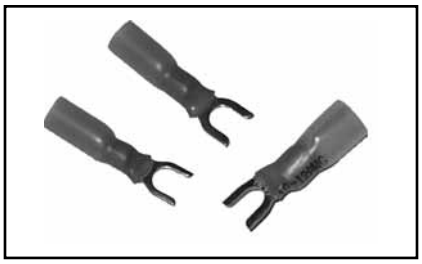

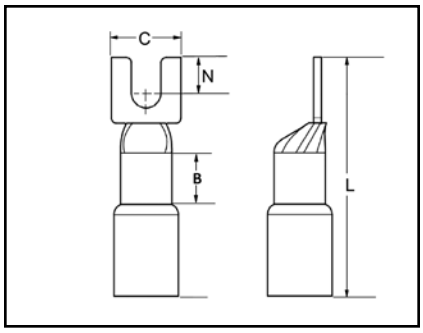

Features & Benefits

- Made from pure copper, annealed for maximum strength
- Color-coded, imprinted with wire size
- Serrated barrels offer maximum wire contact and tensile strength
- Electro tin plated for corrosion resistance
- Wire Strip Length 5/16"

Catalog No. (100/bag)	Catalog No. (20/bag)	Stud Size	Conductor Size	Dimensions				Tongue Thickness	Installation Tooling	Wire Strip Length
				B	C	L	N			
YHSA18K6F	YHSA18K6FRK	4-6	22-18 AWG	0.22	0.25	1.17	0.32	0.04	MR22	5/16
YHSA18K8F	YHSA18K8FRK	6-8			0.32	1.17	0.32	0.04		
YHSA18K10F	YHSA18K10FRK	8-10			0.31	1.18	0.27	0.03		
YHSA14K6F	YHSA14K6FRK	4-6	16-14 AWG		0.25	1.17	0.30	0.04		
YHSA14K8F	YHSA14K8FRK	6-8			0.34	1.17	0.30	0.04		
YHSA14K10F	YHSA14K10FRK	8-10			0.34	1.17	0.27	0.03		
YHSA14K14FRK	—	1/4			0.50	1.17	0.30	0.04		
YHSA10K6F	—	4-6	12-10 AWG		0.35	1.17	0.29	0.04		
YHSA10K8F	YHSA10K8FRK	6-8			0.35	1.17	0.29	0.04		
YHSA10K10F	YHSA10K10FRK	8-10			0.37	1.16	0.27	0.04		
YHSA10K14FRK	—	1/4			0.50	1.17	0.30	0.04		

TYPE T-LF

HYLUG™

Uninsulated Compression Terminal
Locking Fork Tongue

Type T-LF employs a locking fork tongue for fast installation and security.

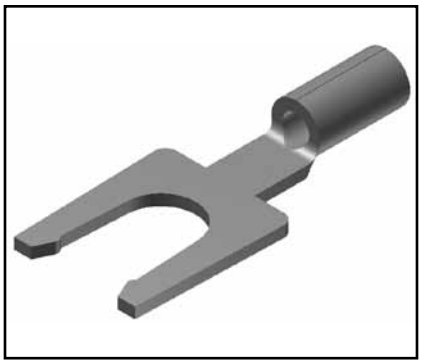

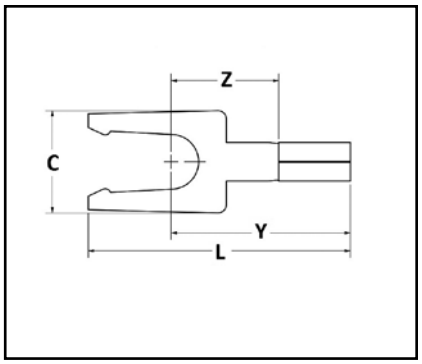

Features & Benefits

- Locking fork tongue design allows fast installation - screw only has to be loosened for termination
- Internal configuration of the fork prevents the terminal from coming off the screw without applying a pulling force
- Locking fork is made from a copper alloy; permits many installations while maintaining proper spring retention of forks

Catalog Number	Wire Range	Stud Size	C	L	Y	Z	Installation Tooling	Wire Strip Length
T166LF	22 - 16 AWG	#4 - #6	0.25	0.83	0.54	0.32	MRE1022B MR8G98 Y8MRB-1 MR20 Y10D Y10-22	9/32
T168LF		#6 - #8	0.31	0.83	0.57	0.32		
T1610LF		#8 - #10	0.31	0.83	0.63	0.32		
T146LF	16 - 14 AWG	#4 - #6	0.25	0.81	0.54	0.30	MRE1022B MR8G98 Y8MRB-1 MR20 Y10D Y10-22	9/32
T148LF		#6 - #8	0.30	0.83	0.57	0.30		
T1410LF		#8 - #10	0.32	0.83	0.63	0.30		
T106LF	12 - 10 AWG	#4 - #6	0.30	0.90	0.54	0.29	MRE1022B MR8G98 Y8MRB-1 MR20 Y10D Y10-22	11/32
T108LF		#6 - #8	0.33	0.90	0.57	0.29		
T1010LF		#8 - #10	0.35	0.90	0.63	0.29		

Blue highlighted items are industry standard and most frequently ordered.

TYPE TP-LF AND BA-EL

VINYLUG™

Terminal - Polyvinylchloride Insulated, Locking Fork Tongue

600 Volts Max., 105° C Max.

Type TP-LF is a variation of the Type TP design and employs a locking fork tongue for fast installation and security.

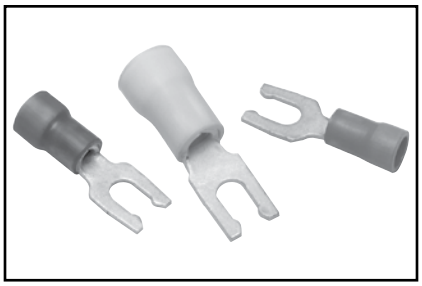

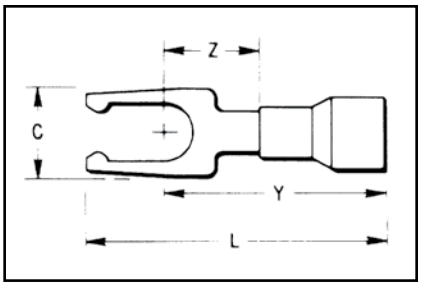

Features & Benefits

- Locking fork tongue design
  - ◊ Allows fast installation-screw only has to be loosened for termination.
- Internal configuration of the fork
  - ◊ Prevents the terminal from coming off the screw without applying a pulling force.
- Locking fork is made from a copper alloy
  - ◊ Permits many installations while maintaining proper spring retention of forks.

Catalog Number	Wire Range	Stud Size	Dimensions				Bulk Catalog Number •	Installation Tooling	Tape Mounted Catalog Number 2000/ Reel	Installation Tooling for tape mounted	Wire Strip Length
			C	L. Max	Y Max.	Z Min.					
TP16-6LF	22 - 16 Max. Insul. Dia. Accom.: 0.15 Color Code: Red	#4 - #6	0.28	0.80	0.66	0.23	**BA16EL6**	Plier Type: Y10-22 Ratchet Tool: MRE1022NV MR8-89-1 MR15	**BA16EL6M**	TFM with DFM3D-1 Die	13/64
TP16-8LF		#6 - #8	0.31	0.86	0.69	0.26	**BA16EL8**		**BA16EL8M**		13/64
TP16-10LF		#8 - #10	0.41	0.95	0.75	0.31	**BA16EL10**		**BA16EL10M**		13/64
TP14-6LF	16 - 14 Max. Insul. Dia. Accom.: 0.18 Color Code: Blue	#4 - #6	0.28	0.80	0.66	0.23	**BA14E6L**		**BA14E6LM**	TFM with DFM2D1 Die	13/64
TP14-8LF		#6 - #8	0.31	0.86	0.69	0.26	**BA14EL8**		**BA14EL8M**		13/64
TP14-10LF		#8 - #10	0.41	0.95	0.75	0.31	**BA14EL10**		**BA14EL10M**		13/64
TP10-6LF	12 - 10 Max. Insul. Dia. Accom.: 0.26 Color Code: Yellow	#4 - #6	0.28	0.95	0.81	0.26	**BA10EL6**		*** BA10EL6M**	TFM with DFM1D5 Die	19/64
TP10-8LF		#6 - #8	0.31	0.98	0.81	0.26	**BA10EL8**		*** BA10EL8M**		19/64
TP10-10LF		#8 - #10	0.41	1.07	0.87	0.31	**BA10EL10**	Plier Type: Y10-22 Ratchet Tool: MR8-89-1 MR15	*** BA10EL10M**		19/64

• UL Llisted and CSA Certified with MR8-89-1 and MR15.

* 1000/Reel.

Blue highlighted items are industry standard and most frequently ordered.

TYPE TN-LF

INSULUG™

Terminal - Nylon Insulated,
Locking Fork Tongue
300 Volts Max., 105° C Max.

The Type TN-LF, nylon insulated fork tongue terminal has the same high quality as the TN. It is designed to meet the heavy-duty requirements of industrial and utility applications.

Used on both power and control circuits for wire sizes #26 AWG through #10 AWG. The TN-LF provides high dielectric strength and stability in oily conditions.

The TN-LF is identical to the TN with the addition of a fork tongue which allows installation without complete removal of its supporting screw.

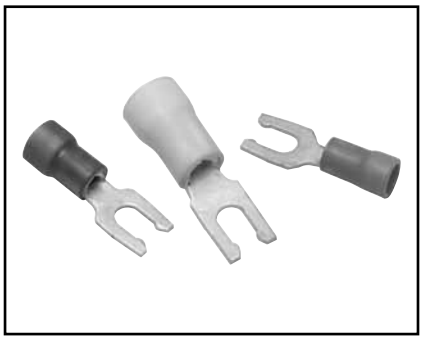

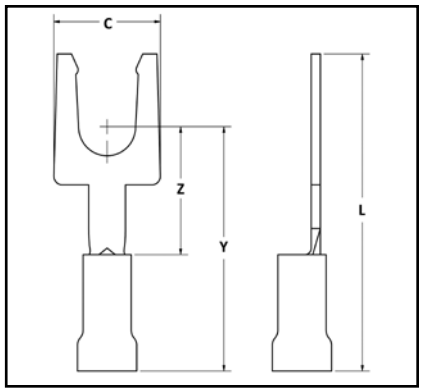

Features & Benefits

- Locking fork tongue design
  - ◊ Allows fast installation-screw only has to be loosened for termination
- Internal configuration of the fork
  - ◊ Prevents the terminal from coming off the screw without applying a pulling force
- Locking fork is made from a copper alloy
  - ◊ Permits many installations while maintaining proper spring retention of forks

Catalog Number	Wire Range	Stud Size	Dimensions				Installation Tooling	Wire Strip Length
			C	L Max.	Y Max.	Z Min.		
TN18-6LF	22 - 18 Max. Insul. Dia. Accom: 0.145 Color Code: Red	4-6	0.25	0.95	0.66	0.32	MRE1022NV, MR8-83, Y10D, Y1022	7/32
TN18-8LF		6-8	0.31	0.95	0.69	0.32		
TN18-10LF		8-10	0.31	0.95	0.75	0.32		
TN14-6LF	16 - 14 Max. Insul. Dia. Accom: 0.180 Color Code: Blue	4-6	0.25	0.93	0.66	0.30	MRE1022NV, MR8-83, Y10D, Y1022	7/32
TN14-8LF		6-8	0.30	0.95	0.69	0.30		
TN14-10LF		8-10	0.32	0.95	0.75	0.30		
TN10-6LF	12 - 10 Max. Insul. Dia. Accom: 0.260 Color Code: Yellow	4-6	0.30	1.02	0.66	0.29	MRE1022NV, MR8-83, Y10D, Y1022	11/32
TN10-8LF		6-8	0.33	1.02	0.69	0.29		
TN10-10LF		8-10	0.35	1.02	0.75	0.29		

Blue highlighted items are industry standard and most frequently ordered.

TYPE YAE-N-LF

INSULUG™

Terminal - Nylon Insulated,
Locking Fork Tongue
300 Volts Max., 105° C Max.

The YAE-N-LF Locking Fork is nylon insulated with an insulation grip and accepts a 22-10 AWG wire. The spring-like tongue locks into place around the stud even when the mount screw is not tightened.

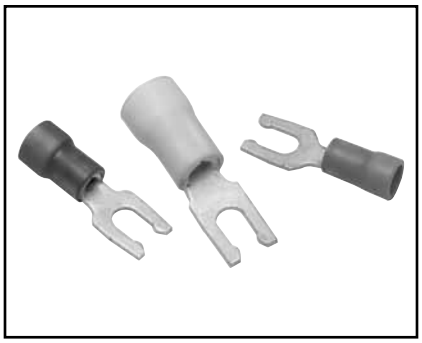

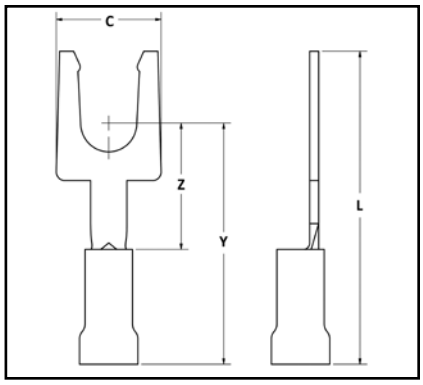

Features & Benefits

- Locking Fork Tongue
- Rapid easy installation of terminal without complete removal of screw

Catalog Number	Wire Range	Stud Size	Dimensions				Installation Tooling	Wire Strip Length
			C	L Max.	Y Max.	Z Min.		
YAE18N104LFBOX	22 - 18	#4 - #6	0.25	0.95	0.66	0.32	MRE1022NV MR8-83 Y10-22 Y10D	7/32
YAE18N105LFBOX		#6 - #8	0.31	0.95	0.69	0.32		
YAE18N106LFBOX		#8 - #10	0.31	0.95	0.75	0.32		
YAE14N107LFBOX	16 - 14	#4 - #6	0.25	0.93	0.66	0.30	MRE1022NV MR8-83 Y10-22 Y10D	7/32
YAE14N108LFBOX		#6 - #8	0.30	0.95	0.69	0.30		
YAE14N109LFBOX		#8 - #10	0.32	0.95	0.75	0.30		
YAE10N110LFBOX	12 - 10	#4 - #6	0.30	1.02	0.81	0.29	MRE1022NV MR8-83 Y10-22 Y10D	11/32
YAE10N111LFBOX		#6 - #8	0.33	1.02	0.81	0.29		
YAE10N112LFBOX		#8 - #10	0.35	1.02	0.87	0.29		

TYPE YHSA-K-LF

HYDENT™ HEAT SHRINK FORK

For Use on Copper Conductor

Standard crimp terminals leave the wire exposed allowing in moisture or other contaminants which can result in corrosion. Corrosion reduces the amount of current the wire can carry safely. The integrity of the electrical system can be compromised when unsealed electrical connections are utilized. Heat shrink terminals provide a durable seal blocking out contaminants ensuring a better connection.

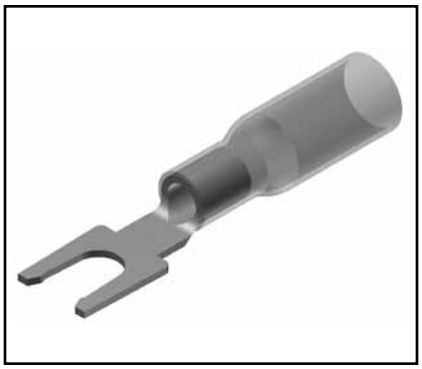

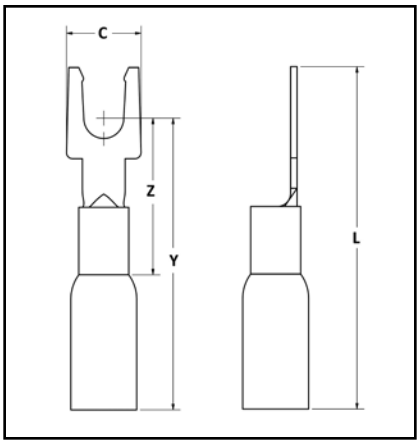

Features & Benefits

- Made from copper, annealed for maximum strength
- Color-coded, imprinted with wire size
- Serrated barrels offer maximum wire contact and tensile strength
- Electro tin plated for corrosion resistance

Catalog Number	Wire Range	Stud Size	L	C	Y	Z	Installation Tooling	Wire Strip Length
YHSA18K6LF	22 - 18	#6	1.20	0.25	0.66	0.32	MR22	5/16"
YHSA18K8LF		#8	1.20	0.31	0.69	0.32		
YHSA18K10LF		#10	1.20	0.31	0.75	0.32		
YHSA14K6LF	16 - 14	#6	1.18	0.25	0.66	0.30	MR22	5/16"
YHSA14K8LF		#8	1.20	0.30	0.69	0.30		
YHSA14K10LF		#10	1.20	0.32	0.75	0.30		
YHSA10K6LF	12 - 10	#6	1.27	0.30	0.81	0.29	MR22	5/16"
YHSA10K8LF		#8	1.27	0.33	0.81	0.29		
YHSA10K10LF		#10	1.27	0.35	0.87	0.29		

Blue highlighted items are industry standard and most frequently ordered.

TYPE T-BF

FINGRIP™

Uninsulated Compression Terminal Block Fork Tongue

Type T-BF is made from pure electrolytic copper. Electro-tin plated for corrosion resistance. Block spade design, featured squared-off ends.

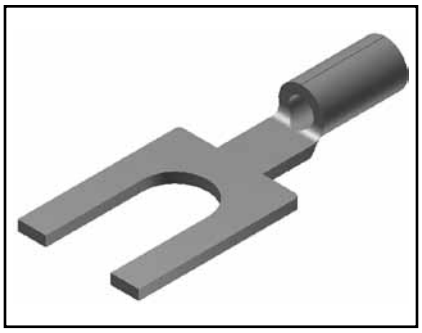

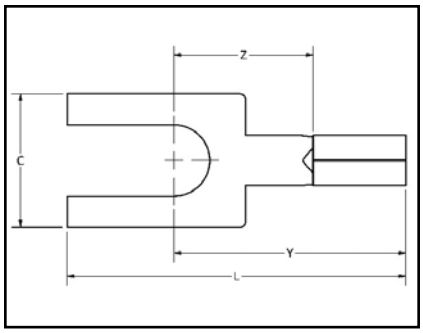

Features & Benefits

- Permits rapid, easy installation of the terminal under the screw head without complete removal of the screw

Catalog Number	Wire Range	Stud Size	C	L	Y	Z	Installation Tooling	Wire Strip Length
T166BF	22 - 16 AWG	#4 - #6	0.25	0.83	0.20	0.83	MRE1022B MR8G98 Y8MRB-1 MR20 Y10D Y10-22	9/32"
T168BF		#6 - #8	0.31	0.83	0.20	0.79		
T1610BF		#8 - #10	0.31	0.83	0.20	0.79		
T146BF	16 - 14 AWG	#4 - #6	0.25	0.81	0.18	0.81		
T148BF		#6 - #8	0.30	0.83	0.18	0.80		
T1410BF		#8 - #10	0.32	0.83	0.18	0.79		
T106BF	12 - 10 AWG	#4 - #6	0.30	0.90	0.17	0.87		11/32"
T108BF		#6 - #8	0.33	0.90	0.17	0.86		
T1010BF		#8 - #10	0.35	0.90	0.17	0.85		

TYPE TP-BF

INSULUG™

Terminal - Vinyl Insulated,
Block Fork Tongue

Type TP-BF terminals are made from pure electrolytic copper. Electro-tin plated for corrosion resistance and Vinyl insulated. Block spade design features squared off ends.

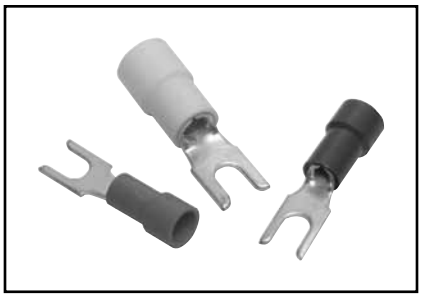

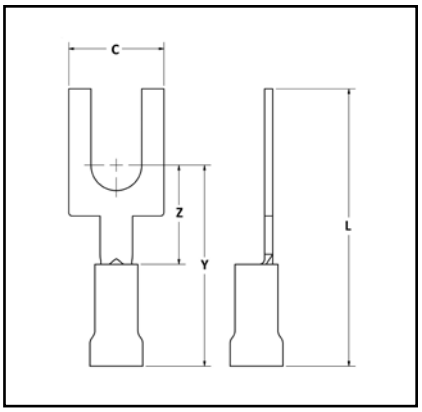

Features & Benefits

- Permits rapid and easy installation of the terminal under the screw head without complete removal of the screw

Catalog Number	Wire Range	Stud Size	C	L	Y	Z	Installation Tooling	Wire Strip Length
TP166BF	22 - 16	#4 - #6	0.25	0.95	0.83	0.32	Y10-22 MR8-89-1 MR8-G96 MR15 MRE1022NV	13/64
TP168BF		#6 - #8	0.31	0.95	0.79	0.32		
TP1610BF		#8 - #10	0.31	0.95	0.79	0.32		
TP146BF	16 - 14	#4 - #6	0.25	0.93	0.81	0.30	Y10-22 MR8-89-1 MR8-G96 MR15 MRE1022NV	13/64
TP148BF		#6 - #8	0.30	0.95	0.80	0.30		
TP1410BF		#8 - #10	0.32	0.95	0.79	0.30		
TP106BF	12 - 10	#4 - #6	0.30	1.02	0.87	0.29	Y10-22 MR8-89-1 MR8-G96 MR15 MRE1022NV	19/64
TP108BF		#6 - #8	0.33	1.02	0.86	0.29		
TP1010BF		#8 - #10	0.35	1.02	0.85	0.29		

TYPE TN-BF

HYDENT™

Terminal - Nylon Insulated,
Block Fork Tongue

600 Volts Max., 105° C Max.

Type TN-BF terminals are made from pure electrolytic copper. Electro tin plated for corrosion resistance. Block spade design features squared-off ends.

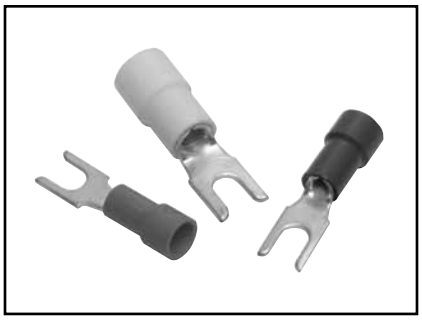

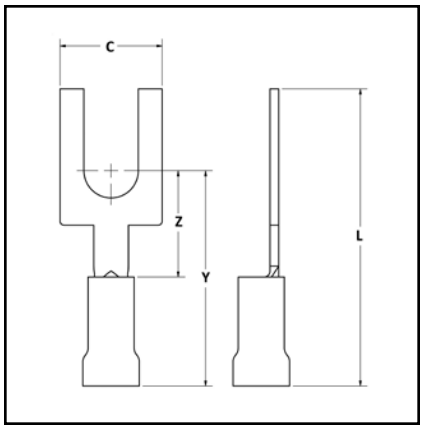

Features & Benefits

- Permits rapid and easy installation of the terminal under the screw head without complete removal of the screw.

Catalog Number	Wire Range	Stud Size	C	L	Y	Z	Installation Tooling	Wire Strip Length
TN186BF	22 - 18	#4 - #6	0.25	0.95	0.83	0.32	MRE1022NV MR81A Y10D Y10-22 M8ND with one of the following N14HET25V1, N10ET9, N14ET15, N10ET23	3/16"
TN188BF		#6 - #8	0.31	0.95	0.79	0.32		
TN1810BF		#8 - #10	0.31	0.95	0.79	0.32		
TN146BF	16 - 14	#4 - #6	0.25	0.93	0.81	0.30		
TN148BF		#6 - #8	0.30	0.95	0.80	0.30		
TN1410BF		#8 - #10	0.32	0.95	0.79	0.30		
TN106BF	12 - 10	#4 - #6	0.30	1.02	0.87	0.29		3/8"
TN108BF		#6 - #8	0.33	1.02	0.86	0.29		
TN1010BF		#8 - #10	0.35	1.02	0.85	0.29		

Blue highlighted items are industry standard and most frequently ordered.

TYPE YAE-N-BF

INSULUG™

Terminal - Nylon Insulated
Block Fork Tongue

600 Volts Max., 105° C Max.

Type YAE-N-BF terminals are a block spade design featuring squared-off ends.

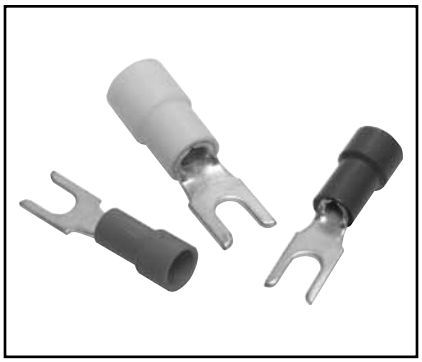

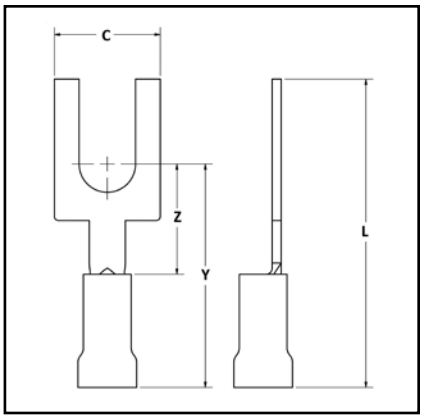

Features & Benefits

- Rapid easy installation of terminal under the screw head without complete removal of the screw

Catalog Number	Wire Range	Stud Size	C	L	Y	Z	Installation Tooling	Wire Strip Length
YAE18N104BFBOX	22 - 18	#4 - #6	0.25	0.95	0.83	0.32	MRE1022NV, MR8-1A, MR8-33T-1, Y10D, Y1022, M8ND with one of the following dies: N14HET-25V1, N10ET-9, N14ET-15, N10ET-23	3/16"
YAE18N105BFBOX	22 - 18	#6 - #8	0.31	0.95	0.79	0.32		
YAE18N106BFBOX	22 - 18	#8 - #10	0.31	0.95	0.79	0.32		
YAE14N107BFBOX	16 - 14	#4 - #6	0.25	0.93	0.81	0.30		
YAE14N108BFBOX	16 - 14	#6 - #8	0.30	0.95	0.80	0.30		
YAE14N109BFBOX	16 - 14	#8 - #10	0.32	0.95	0.79	0.30		
YAE10N110BFBOX	12 - 10	#4 - #6	0.30	1.02	0.87	0.29		3/8"
YAE10N111BFBOX	12 - 10	#6 - #8	0.33	1.02	0.86	0.29		
YAE10N112BFBOX	12 - 10	#8 - #10	0.35	1.02	0.85	0.29		

TYPE YHSA-K-BF

HYDENT™ HEAT SHRINK BLOCK FORK

For Use on Copper Conductor

Standard crimp terminals leave the wire exposed allowing in moisture or other contaminants which can result in corrosion. Corrosion reduces the amount of current the wire can carry safely. The integrity of the electrical system can be compromised when unsealed electrical connections are utilized. Heat shrink terminals provide a durable seal blocking out contaminants ensuring a better connection.

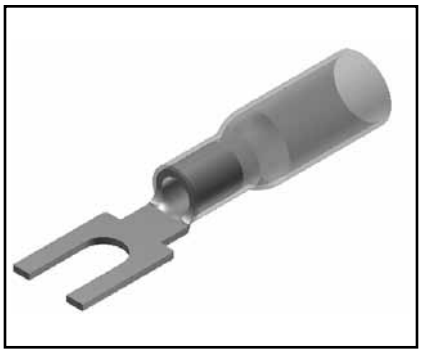

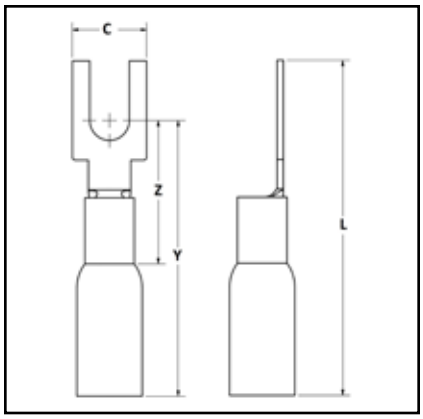

Features & Benefits

- Made from copper, annealed for maximum strength
- Color-coded, imprinted with wire size
- Serrated barrels offer maximum wire contact and tensile strength
- Electro tin plated for corrosion resistance

Catalog Number	Wire Range	Stud Size	C	L	Y	Z	Tongue Thickness	Installation Tooling	Wire Strip Length
YHSA18K6BF	22 - 18	#4 - #6	0.25	1.20	0.66	0.13	0.04	MR22	5/16"
YHSA18K8BF		#6 - #8	0.31	1.20	0.69	0.16	0.04	MR22	
YHSA18K10BF		#8 - #10	0.31	1.20	0.75	0.16	0.04	MR22	
YHSA14K6BF	16 - 14	#4 - #6	0.25	1.18	0.66	0.13	0.04	MR22	5/16"
YHSA14K8BF		#6 - #8	0.30	1.20	0.69	0.15	0.04	MR22	
YHSA14K10BF		#8 - #10	0.32	1.20	0.75	0.16	0.04	MR22	
YHSA10K10BF	12 - 10	#4 - #6	0.30	1.27	0.87	0.15	0.04	MR22	5/16"
YHSA10K6BF		#6 - #8	0.33	1.27	0.81	0.16	0.04	MR22	
YHSA10K8BF		#8 - #10	0.35	1.27	0.81	0.18	0.04	MR22	

Blue highlighted items are industry standard and most frequently ordered.

TYPE TP-Z AND BA-EZ

VINYLUG™

Terminal - Polyvinylchloride Insulated, Flanged Fork Tongue

600 Volts Max., 105° C Max.

VINYLUG™ Type TP-Z is a variation of the Type TP and employs a flanged fork tongue for fast installation and security.

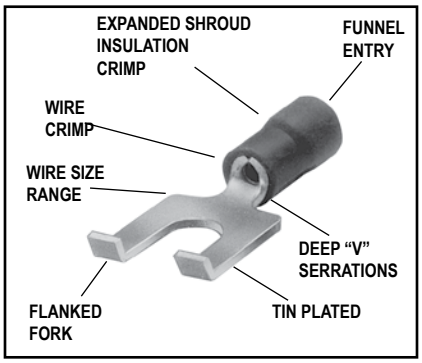

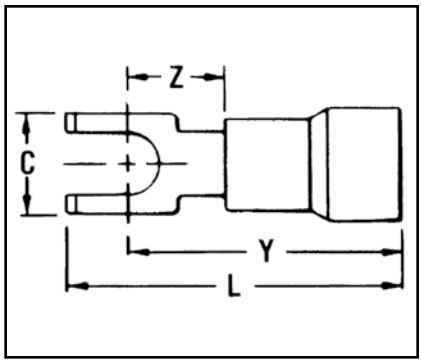

Features & Benefits

- Flange fork tongue design
  - ◊ Allows fast installation—screw only has to be loosened for termination.
- The flanges on the end of the fork terminal aid in preventing a slightly loose terminal from becoming fully disconnected from the screw
  - ◊ Flanges make re-securing a loose terminal easier.

Catalog Number	Wire Range	Stud Size	Dimensions				Bulk Catalog Number	Installation Tooling	Wire Strip Length
			C	Y Max.	Z Min.	L Max.			
TP16-2Z	22 - 16 Max. Insul. Dia. Accom.: 0.15 Color Code Red	#1 - #2	0.17	0.66	0.23	0.78	BA16EZ2	Plier Type: Y10-22 Ratchet Tool: MRE1022NV MR8-89-1	1/4"
TP16-6Z		#4 - #6	0.28	0.66	0.23	0.83	BA16EZ6		
TP16-8Z		#6 - #8	0.31	0.69	0.26	0.88	BA16EZ8		
TP16-10Z		#8 - #10	0.41	0.75	0.31	0.96	BA16EZ10		
TP14-2Z	16 - 14 Max. Insul. Dia. Accom.: 0.18 Color Code: Blue	#1 - #2	0.17	0.66	0.23	0.78	BA14EZ2		
TP14-6Z		#4 - #6	0.28	0.66	0.23	0.83	BA14EZ6		
TP14-8Z		#6 - #8	0.31	0.69	0.26	0.88	BA14EZ8		
TP14-10Z		#8 - #10	0.41	0.75	0.31	0.96	BA14EZ10		
TP10-6Z	12 - 10 Max. Insul. Dia. Accom.: 0.26 Color Code: Yellow	#4 - #6	0.28	0.81	0.26	0.99	BA10EZ6	MRE1022NV, MR15, M8ND with N10ET-23	11/32"
TP10-8Z		#6 - #8	0.31	0.81	0.26	1.01	BA10EZ8		
TP10-10Z		#8 - #10	0.41	0.81	0.31	1.09	BA10EZ10		

Blue highlighted items are industry standard and most frequently ordered.

TYPES YAE-Z BOX AND YAE-Z

INSULUG™

Terminal - Nylon Insulated, Flanged Fork, Multi-Finger Insulation Grip

600 Volts Max. 105° C Max.

INSULUG™ type YAE-Z is identical to type YAE-N and employs a flanged fork tongue for faster installation while maintaining security if supporting screw becomes loose.

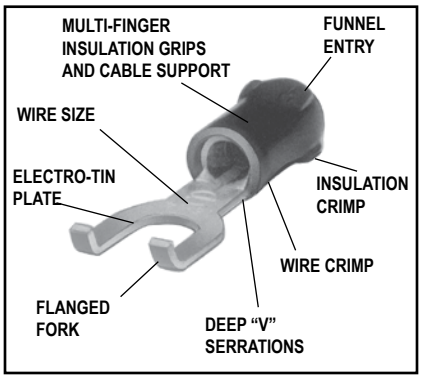

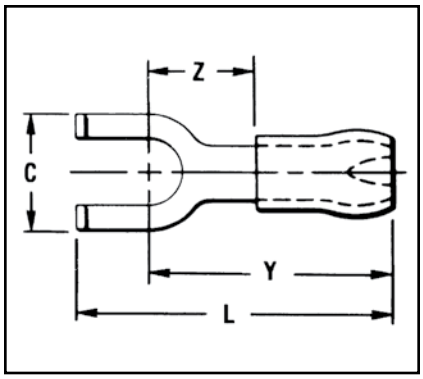

Features & Benefits

- Flanged fork
  - ◊ permits rapid, easy installation of the terminal under the screw head without complete removal of the screw.
  - ◊ Additionally, it may not be removed with only a slight loosening of the screw.

Catalog Number	Wire Range	Stud Size	Dimensions C	Dimensions Z Min.	Dimensions Y Max.	Dimensions L Max.	Bulk Catalog Number	Installation Tooling	Wire Strip Length
YAE22Z1BOX *	26 - 20 Max. Insul. Dia.: .098" Sleeve Color: Amber	#2	0.18	0.21	0.63	0.75	**YAE22Z1**	MRE1022NV, MR8-33T-1, M8ND with one of the following dies: N14HET-15, N10ET-9, N10ET-23, N14HET-25V1 Y10D, Y1022	5/32"
YAE22Z2BOX *		#4 - #6	0.28	0.24	0.67	0.83	**YAE22Z2**		
YAE22Z3BOX *		#6 - #8	0.31	0.28	0.70	0.92	**YAE22Z3**		
YAE18Z1BOX	22 - 16 Max. Insul. Dia. Accom.: .125" Color Code: Red	#2	0.18	0.21	0.70	0.83	**YAE18Z1**		3/16"
YAE18Z2BOX		#4 - #6	0.28	0.24	0.74	1.00	**YAE18Z2**		
YAE18Z3BOX		#6 - #8	0.31	0.28	0.77	1.00	**YAE18Z3**		
YAE18Z4BOX		#8 - #10	0.36	0.32	0.82	1.08	**YAE18Z4**		
YAE14Z2BOX	16 - 14 Max. Insul. Dia. Accom.: .156" Color Code: Blue	#4 - #6	0.28	0.25	0.74	0.90	**YAE14Z2**		
YAE14Z3BOX		#6 - #8	0.31	0.29	0.77	1.00	**YAE14Z3**		
YAE14Z4BOX		#8 - #10	0.36	0.33	0.82	1.08	**YAE14Z4**		
YAE12Z2BOX	14 - 12 Max. Insul. Dia. Accom.: .180" Color Code: Green	#4 - #6	0.28	0.25	0.88	1.04	**YAE12Z2**	MRE1022NV, MR833T-1, M8ND with N12HET-1 Y10D, Y1022	21/64"
YAE12Z3BOX		#6 - #8	0.31	0.30	0.93	1.16	**YAE12Z3**		
YAE12Z4BOX		#8 - #10	0.36	0.34	0.97	1.23	**YAE12Z4**		

* UL Recognized and CSA Certified; Not UL Listed

TYPES YAV-T-F BOX AND YAV-T-F

HYLUG™

Seamless Uninsulated Compression Fork Tongue Terminal

The type YAV-T-F HYLUG™ is a seamless heavy duty uninsulated compression fork-tongue terminal manufactured from electrolytic copper for use on copper commercial (code) cable, Type AN aircraft cable and extra flexible conductors.

The seamless design produces a double thick tongue and the seamless barrel provides a strong highly reliable connection.

All the benefits of the Type YAV apply for the same wire sizes.

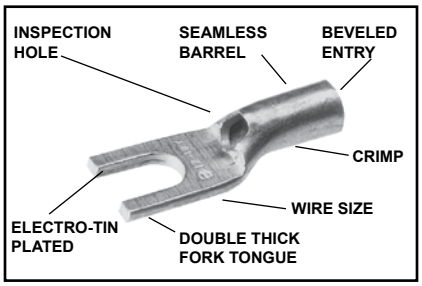

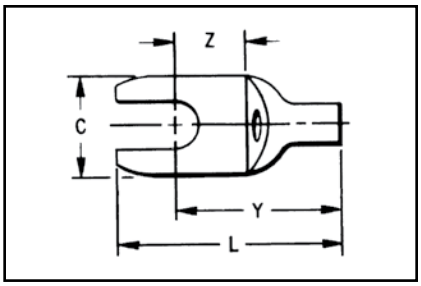

Features & Benefits

- Fork tongue
  - ◊ Allows installation of compression terminal under screw head without complete removal of the screw.

Catalog Number	Wire Range	Stud Size	C	L	Y	Z	Bulk Catalog Number	Installation Tooling	Wire Strip Length
YAV18-T19FBOX	22-18	#4-#6	0.31	0.84	0.55	0.25	**YAV18T19F**	Non-Ratchet: Y10D, Y10-22 Ratchet: MR8-G98, MR8-9Q, MR20, Y8MRB-1, MRE10-22B	9/32"
YAV18-T21FBOX	20-18	#8-#10	0.37	0.84	0.55	0.25	**YAV18T21F**		
YAV14-T32FBOX	20-14	#4-#6	0.31	0.84	0.57	0.25	**YAV14T32F**		
YAV14-T34FBOX		#8-#10	0.37	0.82	0.60	0.26	**YAV14T34F**		
YAV10-T21FBOX	12-10	#8-#10	0.36	0.99	0.69	0.26	**YAV10T21F**		7/16"
YAV10-T23FBOX		1/4	0.47	1.03	0.75	0.34	**YAV10T23F**		

TYPES YAV-H-F BOX, YAV-H-F AND YAV-Z

HYLUG™

Uninsulated Compression Terminal Fork Tongue With Seamless Shroud

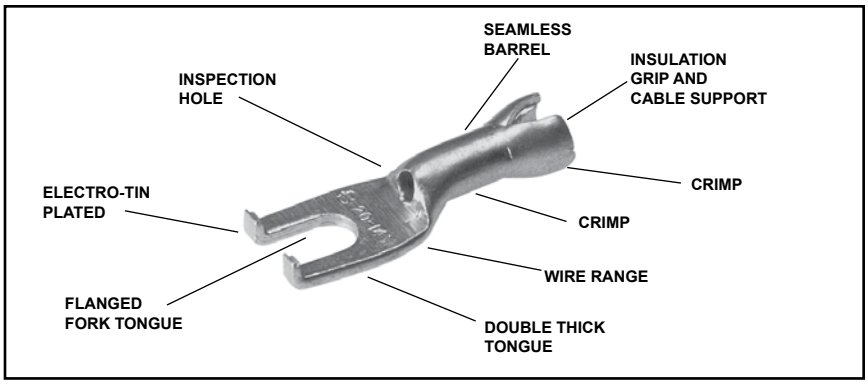

The type "YAV-H-F" HYLUG™ is a seamless heavy duty uninsulated compression fork tongue terminal with a shroud for an insulation grip and cable support. Manufactured from electrolytic copper tubing for use on copper commercial (code) cable, Type "AN" aircraft and extra flexible conductors.

The seamless tubing produces a double thick tongue while the seamless barrel design provides a very strong connector for very demanding applications that require highly reliable connections.

In addition to the benefits described for the YAV box series of connectors the YAVH-F Box and YAV-Z terminals provide the following benefits.

Features & Benefits

- Fork tongue
- ◊ Allows installation of compression terminal under screw head without complete removal of the screw thereby lowering installation costs
- Flanged fork tongue
- ◊ Allows installation of compression terminal under screw head without complete removal of the screw plus aids in maintaining the terminal on the stud should the screw loosen slightly

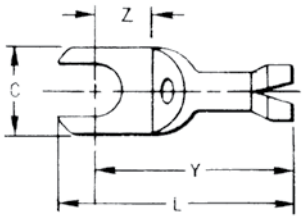

Fig .1

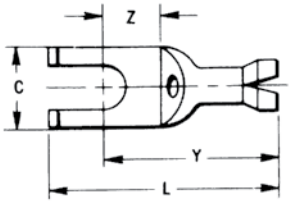

Fig .2

Catalog Number	Fig.	Wire Range	Stud Size	Max. Insul. Dia. Accom.	C	L Max	Y Max	Z Min	Bulk Catalog #	Installation Tooling	Wire Strip Length
YAV18-H6F BOX	1	22-18	4-6	0.120	0.25	0.89	0.80	0.19	**YAV18-H6F**	Non-Ratchet: Y10D*, Y14MV, Y10-22* Ratchet: MR8-G98, MR8-9Q, Y8MRB-1*, MR20, and M8ND with N14HT-5 Die or N14HT	1/4"
YAV18-H19F BOX	1		4-6	0.120	0.30	0.97	0.75	0.21	**YAV18-H19F**		
YAV18-H21F BOX	1		8-10	0.120	0.37	0.97	0.76	0.22	**YAV18-H21F**		
YAV14-Z5 BOX	2	20-14	4-6	0.150	0.31	0.86	0.69	0.13	**YAV14-Z5**		
YAV14-H32F BOX	1		4-6	0.150	0.30	0.96	0.78	0.23	**YAV14-H32F**		
YAV14-H56F BOX	1		6-8	0.150	0.30	0.96	0.78	0.23	**YAV14-H56F**		
YAV14-H34F BOX	1		8-10	0.150	0.38	0.96	0.78	0.23	**YAV14-H34F**		
YAV14-HF BOX	1		8-10	0.150	0.31	0.92	0.78	0.23	**YAV14-HF**		
YAV14-Z6 BOX	2		8-10	0.150	0.37	1.00	0.78	0.21	**YAV14-Z6**		
YAV10-HF BOX	1	12-10	8-10	0.192	0.38	1.07	0.78	0.24	**YAV10-HF**	N10HT-24	7/16"

* Crimps conductor crimp only.

Blue highlighted items are industry standard and most frequently ordered.

TYPE YSV-B

HYDENT™

Uninsulated Butt Splice

HYLINK™ type YSV-B rolled splice connector is used to splice stranded and solid copper conductors in virtually all heavy duty industrial and general purpose applications.

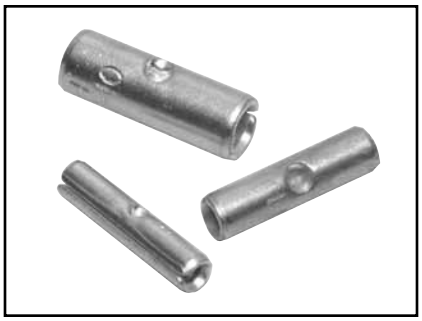

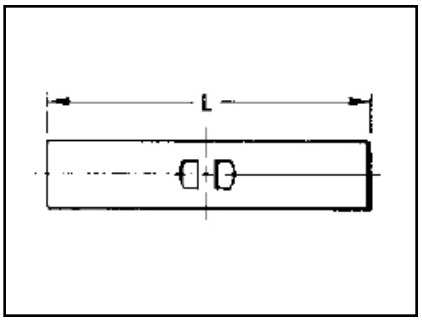

Features & Benefits

- Constructed of pure electrolytic copper
- Provides maximum conductivity, low resistance and ductility for excellent crimp forming properties
- Long brazed seam barrel
- Provides optimum conductivity, reliability and holding power after crimping
- Electro-tin plated
- Provides durable long-lasting corrosion resistance

Catalog Number	Wire Range	L	Installation Tooling	Wire Strip Length
YSV18BBOX	22 - 18 AWG	0.62	Y10D Y10-22 MRE1022B Y8MRB-1 MR8-9Q MR8-G98 MR20	1/4"
YSV14BBOX	16 - 14 AWG	0.64		1/4"
YSV10BBOX	12 - 10 AWG	0.75		5/16"

Blue highlighted items are industry standard and most frequently ordered.

TYPE SP

VINYLINK™

Splice, Polyvinylchloride Insulated

600 Volts Max., 105° C Max.

The Type SP VINYLINK™ is a PVC insulated seamless butt splice. Type SP VINYLINK™ is designed to accommodate a broad range of 600 volt cables.

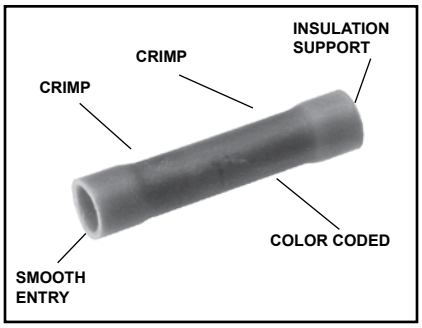

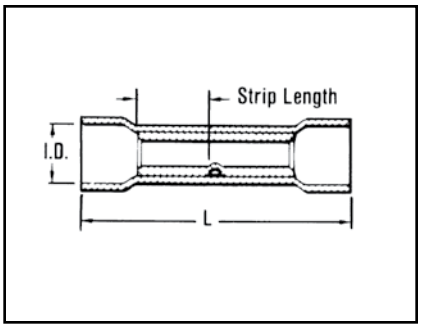

Features & Benefits

- Manufactured from seamless electrolytic copper tubing
  - ◊ Provides maximum conductivity and tensile strength, in a high quality design with NO seams to split
- Funnel entry
  - ◊ Provides easy wire insertion
- Electro-tin plated
  - ◊ Provides durable long lasting resistance to corrosion
- Expanded insulation support
  - ◊ Lower inventory requirements
- Red wire range of 22-16
  - ◊ Lower inventory requirements
- Vinyl insulator
  - ◊ Economical means of providing high dielectric values and cable insulation support

Catalog Number	Wire Range	Color Code	Bulk Catalog Number	Dimensions (Inches)		Installation Tooling	Wire Strip Length
				L Max.	Max Insul. Dia		
SP16	22 - 16	Red	**BS16**	1.00	0.15	Non-Ratchet: Y10-22 Ratchet: MRE1022NV MR8G-98 MR15 MR8-89-1	1/4"
SP14	16 - 14	Blue	**BS14**	1.00	0.18		1/4"
SP10	12 - 10	Yellow	**BS10**	1.23	0.26		21/64"

Blue highlighted items are industry standard and most frequently ordered.

TYPE SN

INSULINK™

Butt Splice, Nylon Insulated

600 Volts Max., 105° C Max.

The Type SN INSULINK™ is a high quality nylon-insulated butt splice designed to meet heavy duty application requirements.

Meets the functional requirements of MIL-T-7928 (ASG) and conforms to the requirements of NAS1388.

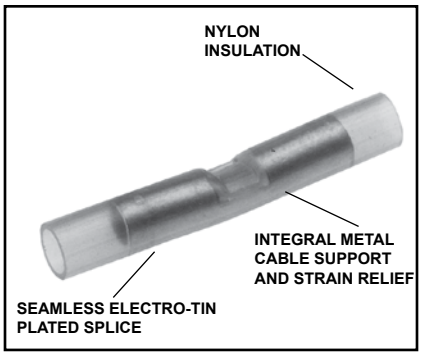

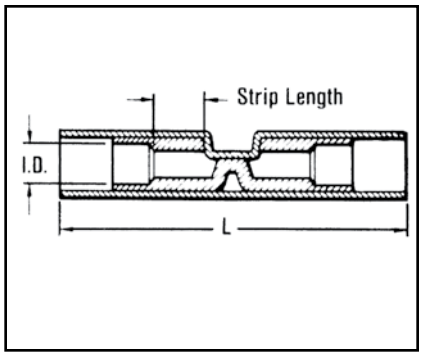

Features & Benefits

- Manufactured from seamless tubing
  - ◊ A high quality design with no seams to split
- Pure electrolytic copper
  - ◊ Provides maximum conductivity, low resistance and ductility for excellent crimp forming properties
- Electro-tin plated
  - ◊ Provides durable long-lasting resistance to corrosion
- Positive center wire stops
  - ◊ Provides for proper depth of wire insertion
- Color-coded in red, blue and yellow
  - ◊ Provides easy wire size identification
- Manufactured from one-piece tin-plated seamless copper tubing with an integral barrel/insulation grip
  - ◊ Provides maximum tensile strength, plus excellent cable support and strain relief and eliminates failures due to vibration
- Smooth funnel entry
  - ◊ Provides easy wire insertion
- Window position locator for full cycle ratchet tool crimp
  - ◊ Provides proper tool/connector alignment for correct crimp
- Nylon insulation offers high dielectric strength and stability in oily environmental conditions
  - ◊ Maintains a high quality connection in demanding applications
- The nylon is locked into position
  - ◊ The connector will not move

Catalog Number	Wire Range	Color Code	Bulk Catalog Number	L Max.	Max Insul Dia	Installation Tooling	Wire Strip Length
SN18	22 - 18	Red	**YSE18HN**	1.25	0.12	Plier: Y10D Y1022 Ratchet: MRE1022NV MR8-83 MR18	15/64"
SN14	16 - 14	Blue	**YSE14HN**	1.25	0.15		7/32"
SN10	12 - 10	Yellow	**YSE10HN**	1.64	0.22		3/8"

Blue highlighted items are industry standard and most frequently ordered.

TYPE SN-B

HYDENT™

Butt Splice, Nylon Insulated

600 Volts Max., 105° C Max.

The Type SN-B INSULINK™ is a high quality nylon-insulated butt splice.

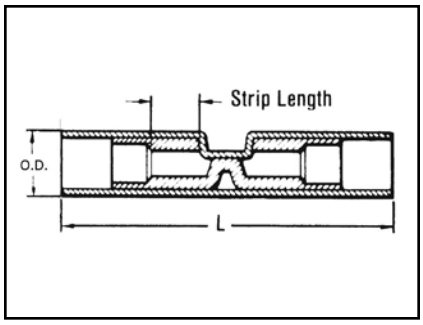

Features & Benefits

- Tin plated copper brazed butt seam
- Smooth funnel entry provides easy wire insertion
- Nylon insulation offers high dielectric strength and stability

Catalog Number	Wire Range	Color Code	L	OD	Installation Tooling	Wire Strip Length
SN18B	22 - 18 AWG	Red	1.25	0.12	Y10D Y1022 MRE1022NV MR8-85	15/64"
SN14B	16 - 14 AWG	Blue	1.25	0.15		7/32"
SN10B	12 - 10 AWG	Yellow	1.64	0.22		3/8"

TYPES YSE BOX, YSE-H BOX

INSULINK™

600 Volts Max., 105° C Max.

The Types YSE and YSE-H INSULINK™ splices are high quality nylon insulated designed for splicing aircraft and commercial flexible cables.

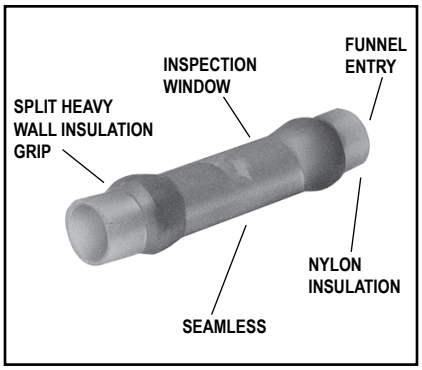

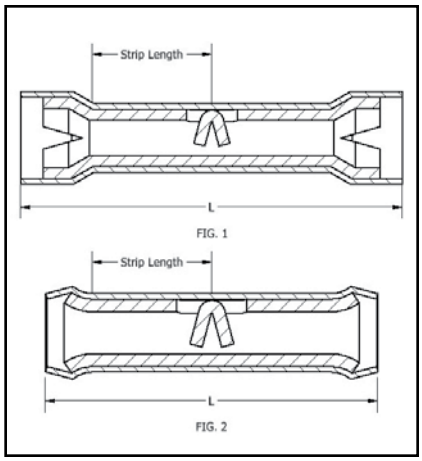

Features & Benefits

- Manufactured from tin plated, seamless electrolytic copper tubing with integral barrel/insulation grip
  - ◊ Provides maximum conductivity and tensile strength, plus excellent cable support and strain relief
- Split heavy wall insulation grip
  - ◊ Provides stronger insulation grip and strain relief
- Smooth funnel entry
  - ◊ Provides easy wire insertion
- Transparent nylon insulation
  - ◊ Permits easy wire inspection

Catalog Number	Figure	Wire Range (Code, AWG, Aircraft, AN)	Color Code	Bulk Catalog Number	L Max.	Max Dia. Insul.	Installation Tooling	Wire Strip Length
YSE18H-BOX	1	22 - 18	Red	**YSE18H**	1.22	0.12	Y10D Y1022 Ratchet: MRE1022NV MR8-33T-1	9/32"
YSE14H-BOX	1	16 - 14	Blue	**YSE14H**	1.36	0.15		11/32"
YSE10-BOX	2	12 - 10	Yellow	**YSE10**	1.15	0.21		23/64"

Blue highlighted items are industry standard and most frequently ordered.

TYPE YSE-HHS

HYDENT™

Heat Shrink Butt Splices

Heat shrink butt connectors are color-coded to industry standard wire range. Heat shrink protects against corrosion.

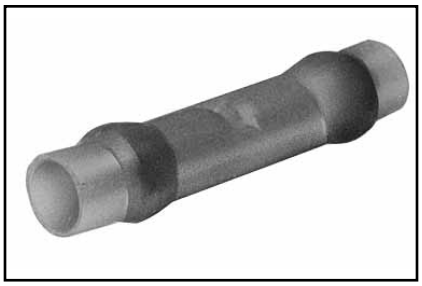

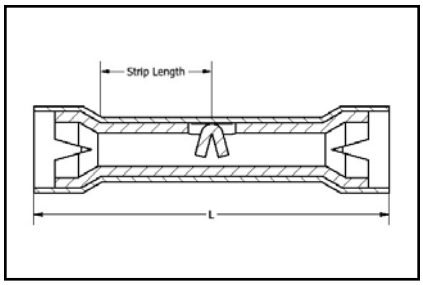

Features & Benefits

- Manufactured from tin plated, seamless electrolytic copper tubing with integral barrel.
  ◊ Provides maximum conductivity and tensile strength, plus excellent cable support and strain relief.
- Smooth funnel entry.
  ◊ Provides easy wire insertion.
- Transparent heat shrink insulation.
  ◊ Provides waterproofing and weather resistance.

Catalog Number	Wire Range	L	W	Installation Tooling	Wire Strip Length
YSE18HHS	18 - 22	1.50	0.17	Y10D, Y1022 MR8-33T-1	9/32"
YSE14HHS	16 - 14	1.50	0.20	Y10D, Y1022 MR8-33T-1	11/32"
YSE10HHS	12 - 10	1.60	0.25	Y10D, Y1022 MR8-33T-1	23/64"

TYPE YSES-K

INSULINK™

Radiation Resistant Insulated Butt Splice, Polyvinylidene Flouride (PVF2) Insulated

200 Megarads - 60° C
Through 150° C, 600 Volts

The Type YSES-K radiation resistant insulated splices are suitable for class 1E applications plus non critical nuclear associated applications. The splice is manufactured from pure electrolytic copper seamless tubing which eliminates potential splitting of seams. A color code stripe is used for wire size identification and a window is provided for inspection of proper wire insertion.

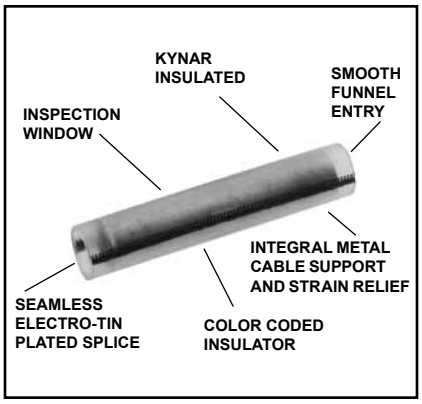

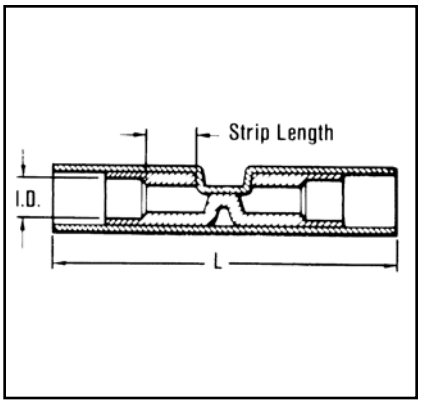

Features & Benefits

- These insulated splices are suitable for class 1E applications
- Pure electrolytic copper seamless tubing eliminates potential splitting of seams
- Color coded stripe identifies wire size
- Window is provided for inspection of proper wire insertion
- Suitable for 200 Megarads Rated 60°C - 150°C
- 600 Volt rated

Catalog Number	Wire Range	Color Stripe	Dimension Max. Insul. Dia. Accom.	L Max.	Installation Tooling	Wire Strip Length
YSES18K	22-18	Red	0.11	1.00	Ratchet Tool: MR10G8 Red Groove Calibration Gauge: PG-373-1 Crimp ID Mark: (1) Small Dot	3/16"
YSES14K	16-14	Blue	0.15	1.00	Ratchet Tool: MR10G8 Blue Groove Calibration Gauge: PG-371-1 Crimp ID Mark: (2) Small Dots	3/16"
YSES10K	12-10	Yellow	0.21	1.38	Ratchet Tool: MR10G8 Yellow Groove Calibration Gauge: PG-372-1 Crimp ID Mark: (1) Large Dot	7/16"

Blue highlighted items are industry standard and most frequently ordered.

TYPE YSV

HYLINK™

Uninsulated Butt Splice

HYLINK™ Type YSV seamless splice connector is used to splice stranded and solid copper conductors in virtually all heavy duty industrial and general purpose applications.

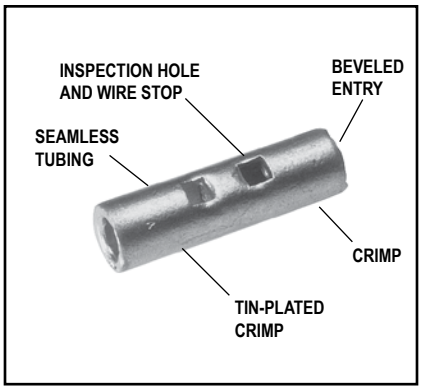

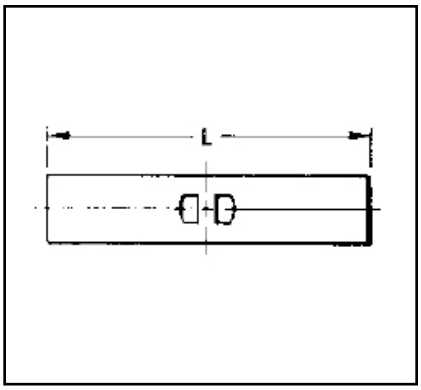

Features & Benefits

- Manufactured from seamless tubing
  - ◊ A high quality design with no seams to split
- Electrolytic copper
  - ◊ Provides maximum conductivity, low resistance and ductility for excellent crimp forming properties
- Electro-tin plated
  - ◊ Provides durable long lasting resistance to corrosion
- Positive center wire stops
  - ◊ Provides proper depth of wire insertion
- Marked with wire size
  - ◊ Provides easy wire size identification
- The HYLINK™ splice connectors have inspection holes
  - ◊ Provides easy visual inspection for proper wire insertion

Catalog Number	Wire Range	L	Bulk Catalog Number	Installation Tooling	Wire Strip Length
YSV18BOX	22 - 18	0.62	**YSV18**	Non-Ratchet: Y10D, Y1022 Ratchet: MRE1022B, MR20, Y8MRB-1, MR8-9Q*, MR8-G98	1/4"
YSV14BOX	20 - 14	0.64	**YSV14**		1/4"
YSV10BOX	12 - 10	0.75	**YSV10**		5/16"

* Remove stop plate.

Blue highlighted items are industry standard and most frequently ordered.

TYPE YSV-L

HYLINK™

Uninsulated Butt Splice
#8 Through 4/0 Copper

HYLINK™ Type YSV-L seamless splice connector is used to splice Type AN aircraft cables plus commercial stranded and solid AWG conductors. Suitable for aircraft, light duty industrial and general purpose applications.

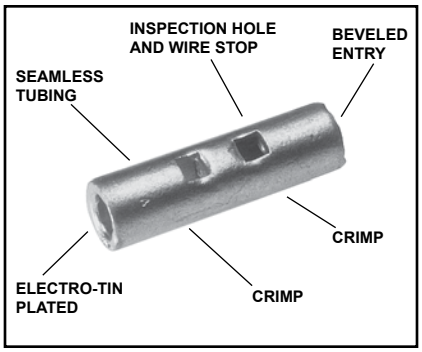

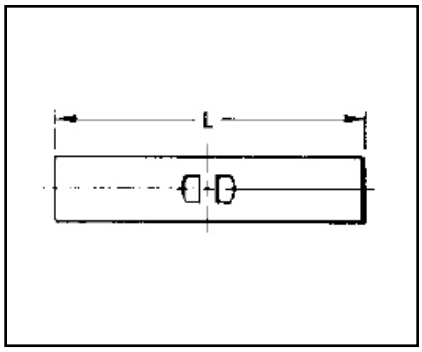

Features & Benefits

- Manufactured from seamless tubing
  - ◊ A high quality design with no seams to split
- Electrolytic copper
  - ◊ Provides maximum conductivity, low resistance and ductility for excellent crimp forming properties
- Electro-tin plated
  - ◊ Provides durable long lasting resistance to corrosion
  - ◊ Provides proper depth of wire insertion
- Marked with wire size
  - ◊ Provides easy wire size identification
- The HYLINK™ splice connectors have inspection holes
  - ◊ Provides easy visual inspection for proper wire insertion

Catalog Number	Wire Range Aircraft-AN Comm'l-AWG Str. & Sol.	Dimensions L	Bulk Catalog Number	Installation Tooling				Wire Strip Length
				Ratchet	HYTOOL™ **	HYPRESS™ • Y35, Y35BH, Y39, Y39BH*		
						Nest	Indentor	
YSV8C-LBOX	8 AWG	1.00	**YSV8CL**	MR89Q, Y8MRB-1, Y1MRTC	MY28 (for Type AH Aircraft Cable); All others: MY29-3, MY29-11 1 Crimp	UV8L-1	Y34PL	7/16"
YSV6C-LBOX	6 AWG	1.12	**YSV6CL**	Y1MRTC, MR4C		UV6L	Y34PLA	5/8"
YSV4C-LBOX	4 AWG	1.12	**YSV4CL**	Y1MRTC, MR4C		UV4L	Y34PLA	5/8"
YSV2C-LBOX	2 AWG	1.41	**YSV2CL**	Y1MRTC		UV2L	Y34PLA	5/8"
YSV1C-LBOX	1 AWG	1.46	**YSV1CL**	—		UV1L	Y34PLA	5/8"
YSV25-LBOX	1/0 AWG	1.53	**YSV25L**	—		UV25L	Y34PA	11/16"
YSV26-LBOX	2/0 AWG	1.78	**YSV26L**	—		UV26L	Y34PA	13/16"
YSV27-LBOX	3/0 AWG	1.81	**YSV27L**	—		UV27L	Y34PA	13/16"
YSV28-LBOX	4/0 AWG	1.94	**YSV28L**	—		UV28L	Y34PA	7/8"

* Remove stop plate
• Use Y35P3 Indentor Adaptor.
** Bench Mount Adaptor - Cat. No. BMY-BCH-MT is available for Type MY HYTOOLS™.

Blue highlighted items are industry standard and most frequently ordered.

TYPE YSV-H

HYLINK™

Uninsulated Butt Splice with Cable Strain Relief

The Type YSV-H HYLINK™ seamless splice connector has the added benefit of an insulation support and cable strain relief.

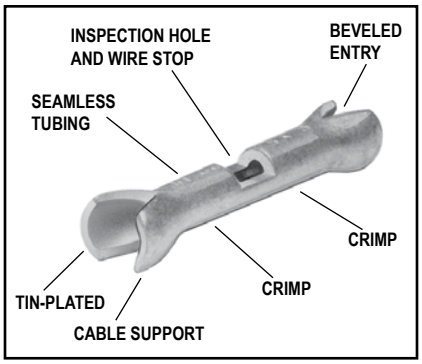

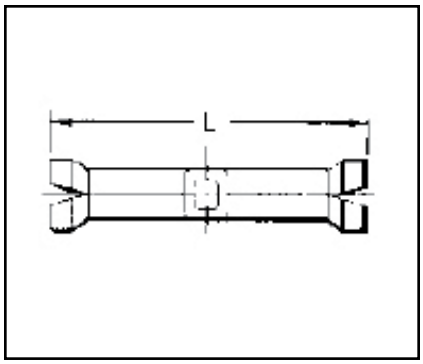

Features & Benefits

- Manufactured from seamless tubing
  - ◊ A high quality design with no seams to split
- Electrolytic copper
  - ◊ Provides maximum conductivity, low resistance and ductility for excellent crimp forming properties
- Electro-tin plated
  - ◊ Provides durable long lasting resistance to corrosion
- Positive center wire stops
  - ◊ Provides proper depth of wire insertion
- Marked with wire size
  - ◊ Provides easy wire size identification
- The HYLINK™ splice connectors have inspection holes
  - ◊ Provides easy visual inspection for proper wire insertion

Catalog Number	Wire Range	L	Bulk Catalog Number	Installation Tooling	Wire Strip Length
YSV18-HBOX	22 - 18	0.89	**YSV18H**	MRE1022B MR8-9Q* MR8-G98	1/4"
YSV14-HBOX	20 - 14	0.94	**YSV14H**		1/4"
YSV10-HBOX	12 - 10	1.06	**YSV10H**		5/16"

* Remove stop plate.

TYPE YSM

HYLINK™

Uninsulated Parallel Splice

HYLINK™ Type YSM seamless parallel splice connector permits wires to be laid parallel inside the connector and spliced together with the BURNDY family of HYTOOL™ installation tooling. Each YSM connector accommodates a wide combination of round, square, and rectangular copper conductors that have a total combined circular mil area listed in the table below. The conductors to be spliced must physically fit within title splice without being forced.

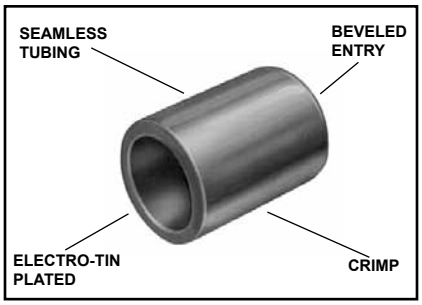

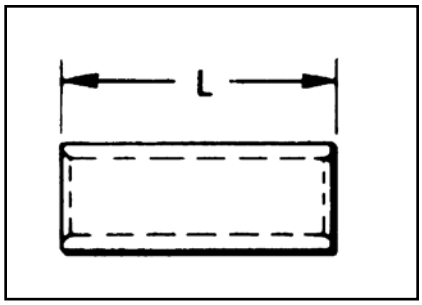

Features & Benefits

- Seamless tubing
- Beveled barrel for ease of wire entry
- Tin plated
- Parallel design results in only one crimp
- Uninsulated barrel provides an economical termination solution when insulation is not specified

Catalog Number	Circular Mil. Range	Dim. L	Installation Tooling						Wire Strip Length
			Ratchet	Mechanical HYTOOL™	Y29B		HYPRESS™• Y35BH, Y39BH*		
					Nest	Indentor	Nest	Indentor	
YSM18	300 - 1,909	0.25	MR8-9Q* Y14MRQ Y8MRB-1	—	—	—	—	—	5/16
YSM14	477 - 4,107	0.25		—	—	—	—	—	5/16
YSM10	4,107 - 10,380	0.36	MR8-9Q* MR4CQ Y10MRQ Y8MRB-1	—	—	—	—	—	7/16
YSM8C	6,088 - 16,864	0.41	Y2MR MR4CQ MR8-9Q*	MY29-11 or MY28 (1) Crimp	DV8L-1	Y29PQ	UV8L-1	Y29PQ	1/2
YSM6C	10,380 - 26,813	0.44	Y2MR MR4CQ		DV6L	Y29PQ	UV6L	Y29PQ	1/2
YSM4C	26,813 - 42,613	0.50			DV4L	Y29PQ	UV4L	Y29PQ	9/16
YSM2C	42,613 - 66,832	0.62	Y2MR		DV2L	Y29PQ	UV2L	Y29PQ	11/16
YSM1C	66,832 - 81,807	0.62	—		DV1L	Y29PQ	UV1L	Y29PQ	11/16
YSM25	81,807 - 104,110	0.69	—		DV25L	Y29PQ-6	UV25L	Y29PQ-6	3/4
YSM26	104,110 - 133,650	0.81	—		DV26L	Y29PQ-6	UV26L	Y29PQ-6	7/8
YSM27	133,650 - 167,332	0.81	—		DV27L	Y29PQ-6	UV27L	Y29PQ-6	7/8
YSM28	167,332 - 211,954	0.88	—		DV28L	Y29PQ-6	UV28L	Y29PQ-6	5/16

* Remove stop plate.

Wire Size	Area Cir. Mils.	Solid Wire Dia. (In.)	Concentric Str. Max. Dia. (In.)
30	100.5	0.010003	0.012
29	126.7	0.01126	–
28	159.8	0.01264	0.015
27	201.5	0.01420	–
26	254.1	0.01594	0.019
25	320.4	0.01790	–
24	404.0	0.02010	0.024
23	509.5	0.02257	–
22	642.4	0.02535	0.030
21	810.1	0.02845	–
20	1022	0.03196	0.038
19	1288	0.03589	–
18	1624	0.04030	0.0460
17	2048	0.04526	–
16	2583	0.05082	0.0585
15	3257	0.05707	–
14	4107	0.06408	0.0735

Wire Size	Area Cir. Mils.	Solid Wire Dia. (In.)	Concentric Str. Max. Dia. (In.)	Flex. Bunch or Rope Lay Dia. (In Approx.)
13	5178	0.07196	–	–
12	6530	0.08081	0.0931	0.101
11	8234	0.09074	–	–
10	10380	0.1019	0.117	0.126
9	13090	0.1144	0.132	0.146
8	16510	0.1285	0.148	0.157 – 0.162
7	20820	0.1433	0.166	0.179 – 0.196
6	26250	0.1620	0.186	0.207 – 0.215
5	33100	0.1819	0.209	0.235 – 0.240
4	41740	0.2043	0.235	0.263 – 0.269
3	52640	0.2294	0.264	0.219 – 0.305
2	66370	0.2576	0.297	0.319 – 0.337
1	83690	0.2893	0.333	0.367 – 0.376
1/0	105500	0.3249	0.374	0.441 – 0.423
2/0	133100	0.3648	0.420	0.500 – 0.508
3/0	167800	0.4096	0.472	0.549 – 0.576
4/0	211600	0.4600	0.530	0.613 – 0.645

Blue highlighted items are industry standard and most frequently ordered.

TYPE YSCM

HYLINK™

Color-Coded
Uninsulated Parallel Splice

Type YSCM HYLINK™ seamless parallel splice connectors permit stranded wires to be laid parallel inside the connector and spliced together with BURNDY® compression tools. Each YSCM connector accommodates a wide range of conductors and is color-coded to ensure proper tool and die match. YSCM connectors are cULus Listed Wire Connectors per UL 486A/B.

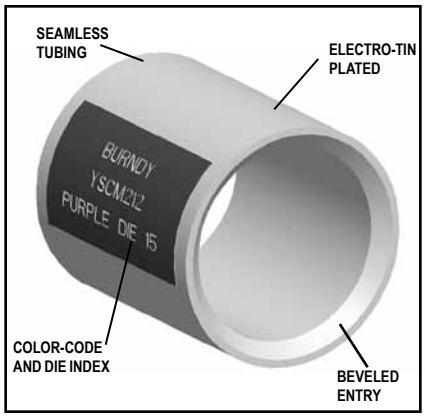

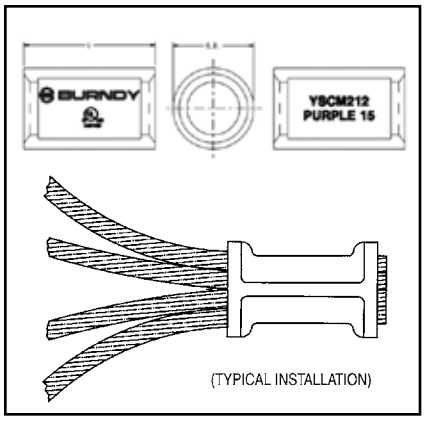

Additionally, they are cULus Listed for Grounding and Bonding per UL 467 and rated for direct burial in Earth and Concrete.

Catalog Number	Conductor Range Cable‡		Dimensions Inches [mm]		Color Code	Die Index	Recommended Installation Tooling		Wire Strip† Length
	Circular Mils		L ±.03	O.D. ±.01			OUR840, Y500CTHS, PAT60018V Series	Y35, Y750, PAT750 Series	
	Min.	Max.							
YSCM17	13,060	16,910	0.5 [13]	0.27 [7]	Red	49	X8CRT, W8CRT	U8CRT	11/16
YSCM27	16,910	26,890	0.5 [13]	0.31 [8]	Blue	7	X5CRT, W5CRT	U5CRT	11/16
YSCM42	29,970	41,520	0.5 [13]	0.38 [10]	Gray	8	X4CRT, W4CRT	U4CRT	11/16
YSCM66	42,750	66,040	0.62 [16]	0.47 [12]	Brown	10	X2CRT, W2CRT	U2CRT	3/4
YSCM80	67,980	80,020	0.62 [16]	0.52 [13]	Green	11	X1CRT-1, W1CRT-1	U1CRT-1	3/4
YSCM104	82,870	103,630	0.69 [18]	0.57 [14]	Pink	12	X25RT, W25RT	U25RT	15/16
YSCM133	104,960	133,220	0.81 [21]	0.64 [16]	Black	13	X26RT, W26RT	U26RT	1-1/16
YSCM167	134,340	166,560	0.81 [21]	0.7 [18]	Orange	14	X27RT, W27RT	U27RT	1-1/16
YSCM212	167,380	211,820	0.88 [22]	0.78 [20]	Purple	15	X28RT, W28RT	U28RT	1-1/16
YSCM231	230,800	230,800	1.05 [27]	0.8 [21]	Yellow	16	X29RT, W29RT, *	U29RT	1-1/16

Notes:
Material: Copper per ASTM B75.
Finish: Tin plated. For nickel plating, add suffix "NK" to the Catalog Number.
Dimensions in brackets [ ] are in millimeters rounded off to the nearest millimeter, unless otherwise noted, and are for reference only.
†Recommended strip length. Strip length dependent on size, no. of wires and insulation thickness.
‡Refer to Circular Mil Table per ASTM B8 for total Class B Circular Mil calculations.
*YSCM231 can also be installed with MY29-3 and retain Listings.

Add the circular mils of the wires you wish to splice; that sum would be used to determine the correct splice using the Min/Max columns on the table above.

The tables to the right are for reference only.

Circular Mil Table per ASTM B8			
Size		ASTM Strandings	
Circular Mils	AWG	Class	Cable Diameter (in)
1,022	20	B	0.036
1,624	18	B	0.045
2,583	16	B	0.057
4,107	14	B	0.072
6,530	12	B	0.091
10,380	10	B	0.116
13,090	9	B	0.130
16,510	8	B	0.146
20,820	7	B	0.164
26,250	6	B	0.184
33,100	5	B	0.206
41,740	4	AA	0.254
41,740	4	B & A	0.232
52,630	3	AA	0.285
52,630	3	B & A	0.260

Circular Mil Table per ASTM B8			
Size		ASTM Strandings	
Circular Mils	AWG	Class	Cable Diameter (in)
66,370	2	AA	0.320
66,370	2	B & A	0.292
83,690	1	AA	0.360
83,690	1	A	0.328
83,690	1	B	0.332
105,500	1/0	A & A	0.368
105,500	1/0	-	0.390
105,500	1/0	B	0.373
133,100	2/0	A & A	0.414
133,100	2/0	-	0.438
133,100	2/0	B	0.419
167,800	3/0	A & A	0.464
167,800	3/0	-	0.492
167,800	3/0	B	0.470
211,600	4/0	A & A	0.522
211,600	4/0	-	0.522
211,600	4/0	B	0.528

Blue highlighted items are industry standard and most frequently ordered.

TYPES YSV, YRV-L

HYREDUCER™

Reducer Butt Splice

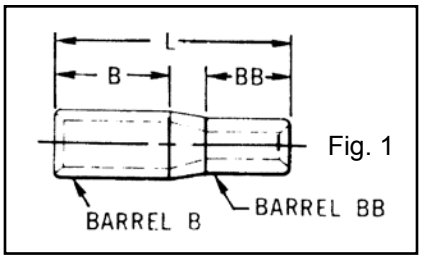

Fig. 1

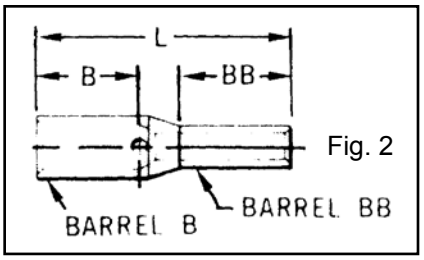

Fig. 2

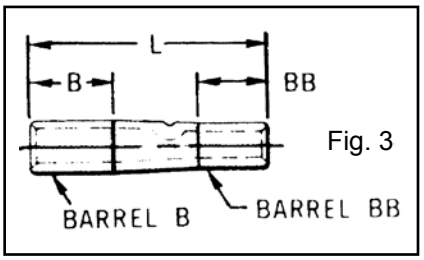

Fig. 3

The HYREDUCER™ is a connector for splicing two different size wires. The larger conductor is inserted first and butts against the center of the connector where the smaller barrel begins. Constructed of pure electrolytic copper tubing for maximum conductivity, tin plated to resist corrosion, the HYREDUCER™ accommodates a wide range of cable sizes.

Dimensional information may be found in Table 1. Table 2 is a comprehensive tooling index for these connectors.

TABLE 1

Catalog Number	Total Wire Range	Fig. No.	B Barrel*			BB Barrel*			L Max.
			Wire Size	B Dim.	Tool Index	Wire Size	BB Dim.	Tool Index	
YSV1418	22 - 14	1	20 - 14	0.27	1	22 - 18	0.27	2	0.60
YSV1214-G1	16 - 12	2	12	0.31	4	16 - 14	0.27	1	0.81
YSV1014-G2	20 - 10	2	12 - 10	0.31	4	20 - 14	0.27	1	0.77
YRV8CV14-L	20 - 8	3	8	0.44	5	20 - 14	0.39	1	1.16
YRV8CV10-L	12 - 8	3	8	0.44	5	12 - 10	0.53	4	1.15
YRV6CV10-L	12 - 6	3	6	0.50	6	12 - 10	0.53	4	1.25
YRV6CV8C-L	8 - 6	3	6	0.50	6	8	0.53	5	1.18
YRV4CV6C-L	6 - 4	3	4	0.50	7	6	0.54	6	1.24
YRV2CV6C-L	6 - 2	3	2	0.62	8	6	0.51	6	1.60

* B and BB dimensions are wire strip lengths.

TABLE 2

TOOL INDEX

Index Number	Hand Tools	Tools With Dies	
		Y29NC	
1	MR8G98 Y8MRB-1 MR8-9Q† MR20	—	
2		—	
4		—	
5	Y8MRB-1 MY28 MR4C Y1MRTC	Nest	Indentor
		DV8L-1*	Y29PL
6	MY28 MR4C Y1MRTC	DV6L	Y29PL
7	MY28 MR4C Y1MRTC	DV4L	Y19PL
8	Y1MRTC MY28	DV2L	Y29PL

* For aircraft applications (flexible cables).

Blue highlighted items are industry standard and most frequently ordered.

TYPE YHSS

HYDENT™ HEAT SHRINK BUTT SPLICES

For Use On Copper Conductor

Standard crimp terminals leave the wire exposed allowing in moisture or other contaminants which can result in corrosion. Corrosion reduces the amount of current the wire can carry safely. The integrity of the electrical system can be compromised when unsealed electrical connections are utilized. Heat shrink terminals provide a durable seal blocking out contaminants ensuring a better connection.

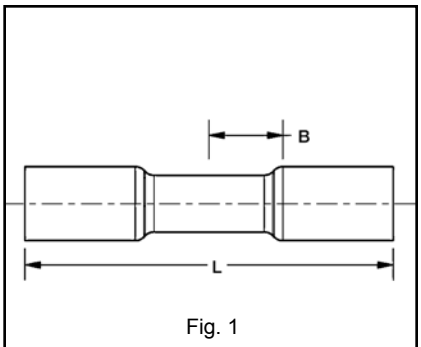

Fig. 1

Features & Benefits

- Made from pure copper, annealed for maximum strength
- Color-coded, imprinted with wire size
- Serrated barrels offer maximum wire contact and tensile strength
- Electro tin plated for corrosion resistance
- Wire strip length 5/16"

Catalog Number (100/bag)	Catalog No. (20/bag)	Fig. No.	Conductor Size	Connector Type	Dimensions	
					B	L
YHSS18	YHSS18RK	1	22 - 18 AWG	Butt Splice	0.25"	1.50"
YHSS14	YHSS14RK		16 - 14 AWG			
YHSS10	YHSS10RK		12 - 10 AWG			1.60"

Recommended Tooling MR22

TYPE Q-M FINGRIP™

NON-INSULATED MALE QUICK DISCONNECTS

Material: Tin-Plated Brass

Non Insulated Quick disconnects allows for quickly connecting or disconnecting a terminal. The front end of the terminal has a female-type receptacle which allows the terminal to slide onto and off of a male blade.

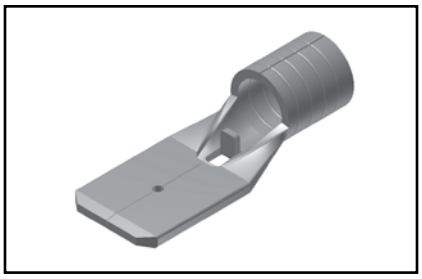

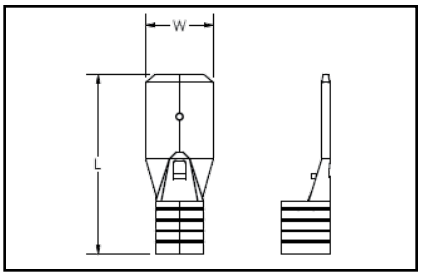

Features & Benefits

- Butted seam
- Chamfered barrel opening
  - ◊ Assures quick and easy wire insertion
- Mates with dimpled female socket detent
  - ◊ Ensures firm grip

Catalog Number	Wire Range	NEMA Tab Size	L	W	Installation Tool	Wire Strip Length	Bulk Catalog Number
Q18M11X02D	18 - 22	0.110 X 0.020	0.66	0.110	MRE1022B MR20 Y10D Y1022	3/8"	—
Q18M18X02D	18 - 22	0.187 X 0.020	0.66	0.187	MRE1022B MR20 Y10D Y1022	3/8"	**Q18M18X02B**
Q18M25X03D	18 - 22	0.250 X 0.032	0.66	0.250	MRE1022B MR20 Y10D Y1022	3/8"	**Q18M25X03B**
Q14M18X02D	14 - 16	0.187 X 0.020	0.66	0.187	MRE1022B MR20 Y10D Y1022	3/8"	**Q14M18X02B**
Q14M25X03D	14 - 16	0.250 X 0.032	0.66	0.250	MRE1022B MR20 Y10D Y1022	3/8"	**Q14M25X03B**
Q10M25X03D	12 - 10	0.250 X 0.032	0.66	0.250	MRE1022B MR20 Y10D Y1022	3/8"	—

Blue highlighted items are industry standard and most frequently ordered.

TYPE Q-F FINGRIP™

NON-INSULATED FEMALE QUICK DISCONNECTS

Material: Tin-Plated Brass

Non Insulated Quick disconnects allows for quickly connecting or disconnecting a terminal. The front end of the terminal has a female-type receptacle which allows the terminal to slide onto and off of a male blade.

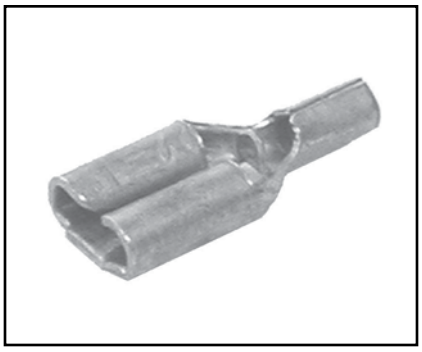

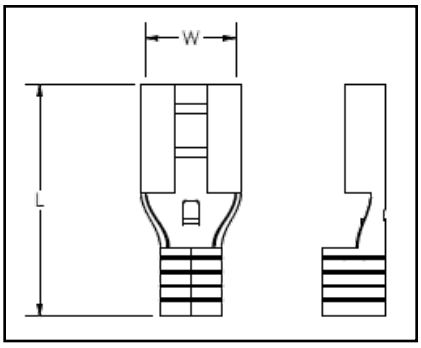

Features & Benefits

- Butted seam
- Chamfered barrel opening
  - ◊ Assures quick and easy wire insertion
- Dimpled female socket detent
  - ◊ Ensures firm grip

Catalog Number	Wire Range	NEMA Tab Size	L	W	Installation Tooling	Wire Strip Length	Bulk Catalog Number
Q18F11X02D	18 - 22	0.110 x 0.020	0.66	0.110	MRE1022B Y10D MR20	3/8"	—
Q18F18X02D		0.187 x 0.020		0.187			**Q18F18X02B**
Q18F25X03D		0.250 x 0.032		0.250			**Q18F25X03B**
Q14F11X02D	14 - 16	0.110 x 0.020		0.110			**Q14F11X02B**
Q14F18X02D		0.187 x 0.020		0.187			**Q14F18X02B**
Q14F25X03D		0.250 x 0.032		0.250			**Q14F25X03B**
Q10F11X02D	12 - 10	0.110 x 0.020		0.110			—
Q10F18X02D		0.187 x 0.020		0.187			—
Q10F25X03D		0.250 X 0.032		0.250			**Q10F25X03B**

Blue highlighted items are industry standard and most frequently ordered.

TYPE QP-M FINGRIP™

VINYL INSULATED MALE QUICK DISCONNECTS

Material: Tin-Plated Brass

600 Volts Max., 105° C Max.

Vinyl Insulated Quick disconnects allows for quickly connecting or disconnecting a terminal. The front end of the terminal has a female-type receptacle which allows the terminal to slide onto and off of a male blade.

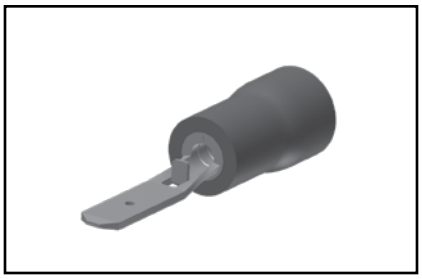

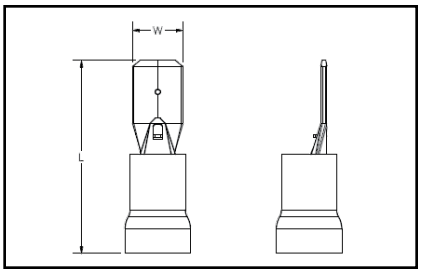

Features & Benefits

- Butted seam
- Funnel entry barrel opening
  - ◊ Assures quick and easy wire insertion
- Mates with dimpled female socket detent
  - ◊ Ensures firm grip

Catalog Number	Wire Range	NEMA Tab Size	L	W	Installation Tool	Wire Strip Length	Bulk Catalog Number
QP18M11X02D	18 - 22	0.11 X 0.02	0.76	0.11	MRE1022NV Y1022 Y10D	3/8"	—
QP18M18X02D		0.19 X 0.02	0.76	0.19			**QP18M18X02B**
QP18M25X03D		0.25 X 0.03	0.84	0.25			**QP18M25X03B**
QP14M11X02D	14 - 16	0.11 X 0.02	0.76	0.11			—
QP14M18X02D		0.19 X 0.02	0.76	0.19			**QP14M18X02B**
QP14M25X03D		0.25 X 0.03	0.84	0.25			**QP14M25X03B**
QP10M25X03D	12 - 10	0.25 X 0.03	0.93	0.25			—

Blue highlighted items are industry standard and most frequently ordered.

TYPE QP-F FINGRIP™

VINYL INSULATED FEMALE QUICK DISCONNECTS

Material: Tin-Plated Brass

600 Volts Max., 105° C Max.

Vinyl Insulated Quick disconnects allows for quickly connecting or disconnecting a terminal. The front end of the terminal has a female-type receptacle which allows the terminal to slide onto and off of a male blade.

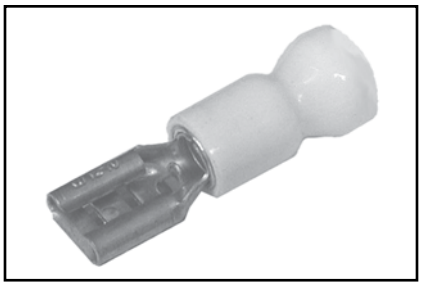

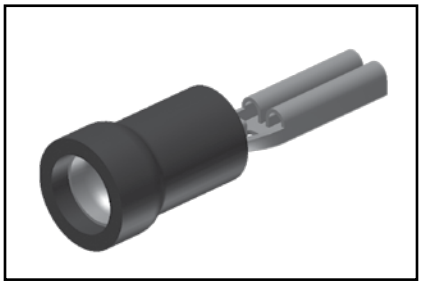

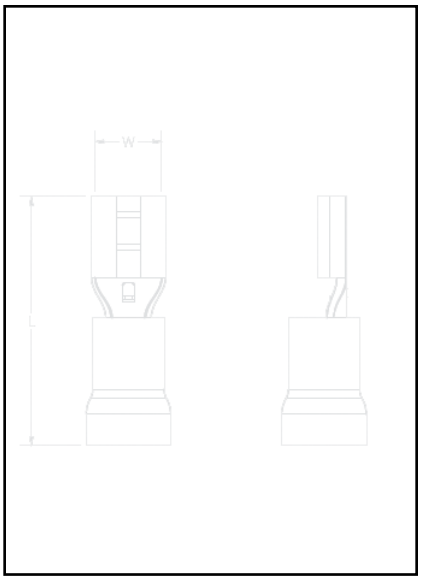

Features & Benefits

- Butted seam
- Insulated connectors
  - ◊ Eliminate the need for post installation insulation
- Funnel entry barrel opening
  - ◊ Assures quick and easy wire insertion
- Dimpled female socket detent
  - ◊ Ensures firm grip

Catalog Number	Wire Range	NEMA Tab Size	L	W	Bulk Catalog Number	Installation Tool	Wire Strip Length
QP18F11X02D	16 - 22	0.11 X 0.02	0.75	0.11	—	MRE1022NV Y10D	3/8"
QP18F18X02D		0.19 X 0.02	0.79	0.22	**QP18F18X02B**		
QP18F25X03D		0.25 X 0.03	0.87	0.29	**QP18F25X03B**		
QP14F11X02D	14 - 16	0.11 X 0.02	0.75	0.11	—		
QP14F18X02D		0.19 X 0.02	0.79	0.23	**QP14F18X02B**		
QP14F25X03D		0.25 X 0.03	0.87	0.29	**QP14F25X03B**		
QP10F18X02D*	10 - 12	0.19X 0.02	0.98	0.29	**QP10F18X02B**		
QP10F25X03D		0.25 X 0.03	0.98	0.29	**QP10F25X03B**		
QP10F38X05D*		0.38 x 0.05	1.12	0.39	—		

* Not cULus.

Blue highlighted items are industry standard and most frequently ordered.

TYPE FQP-F FINGRIP™

VINYL FULLY INSULATED FEMALE QUICK DISCONNECTS

Material: Tin-Plated Brass

600 Volts Max., 105° C Max.

Vinyl Fully Insulated Quick disconnects allows for quickly connecting or dis-connecting a terminal. The front end of the terminal has a female-type receptacle which allows the terminal to slide onto and off of a male blade.

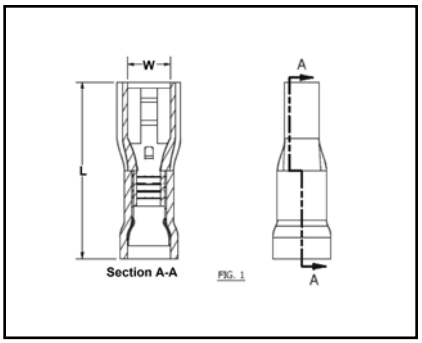

Features & Benefits

- Fully insulated connectors
  - ◊ Eliminate the need for post installation insulation
- Funnel entry barrel opening
  - ◊ Assures quick and easy wire insertion
- Dimpled female socket detent
  - ◊ Ensures firm grip

Catalog Number	Wire Range	NEMA Tab Size	L	W	Installation Tool	Wire Strip Length
FQP18F11X03D	18 - 22	0.11 x 0.03	0.79	0.11	MRE1022NV Y1022	3/8"
FQP18F18X02D		0.19 x 0.02	0.80	0.19		
FQP18F25X03D		0.25 x 0.03	0.90	0.25		
FQP14F11X03D	14 - 16	0.11 x 0.03	0.79	0.11		
FQP14F18X02D		0.19 x 0.02	0.80	0.19		
FQP14F25X03D		0.25 x 0.03	0.90	0.25		
FQP10F25X03D	10 - 12	0.25 x 0.03	0.97	0.25		

TYPE QN-M FINGRIP™

NYLON INSULATED MALE QUICK DISCONNECTS

Material: Tin-Plated Brass

600 Volts Max., 105° C Max.

Nylon Insulated Quick disconnects allow for quickly connecting or disconnecting a terminal. The front end of the terminal has a female-type receptacle which allows the terminal to slide onto and off of a male blade.

Features & Benefits

- Sleeved barrel
- Funnel entry barrel opening
  - ◊ Assures quick and easy wire insertion
- Mates with dimpled female socket detent
  - ◊ Ensures firm grip

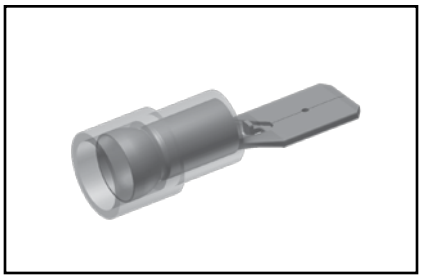

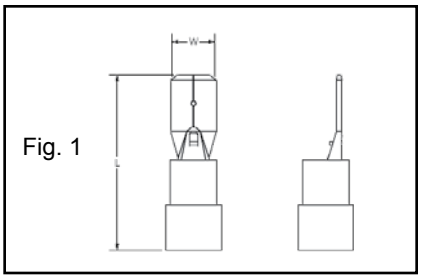

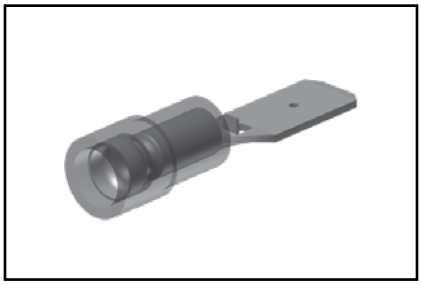

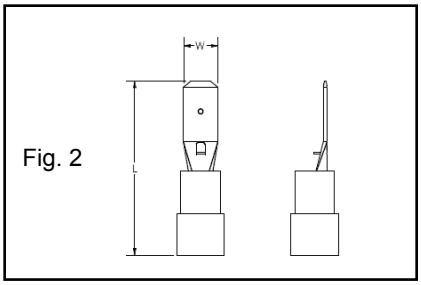

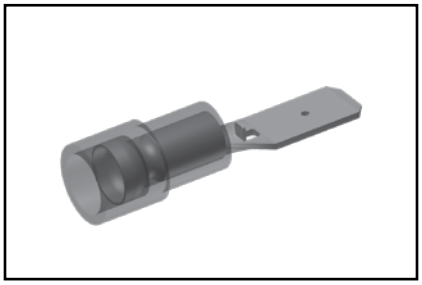

Catalog Number	Figure Number	Wire Range	NEMA Tab Size	L	W	Installation Tool *	Wire Strip Length	Bulk Catalog Number
QN18M18X02D	2	18 - 22	0.19 X 0.02	0.80	0.19	MRE1022NV Y10D T1022	3/8"	**QN18M18X02B**
QN18M25X03D	1		0.25 X 0.03	0.87	0.25			**QN18M25X03B**
QN14M18X02D	2	14 - 16	0.19 X 0.02	0.80	0.19			**QN14M18X02B**
QN14M25X03D	1		0.25 X 0.03	0.87	0.25			**QN14M25X03B**
QN10M25X03D	1	12 - 10	0.25 X 0.03	0.95	0.25			—

Blue highlighted items are industry standard and most frequently ordered.

TYPE QN-F FINGRIP™

NYLON INSULATED FEMALE QUICK DISCONNECTS

Material: Tin-Plated Brass

300 Volts Max., 105° C Max.

Insulated Quick disconnects allows for quickly connecting or disconnecting a terminal. The front end of the terminal has a female-type receptacle which allows the terminal to slide onto and off of a male blade.

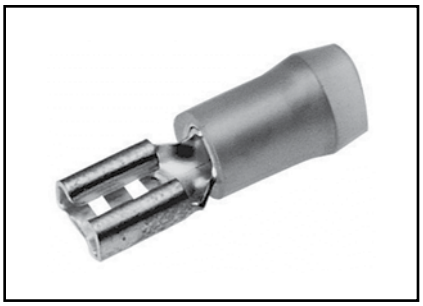

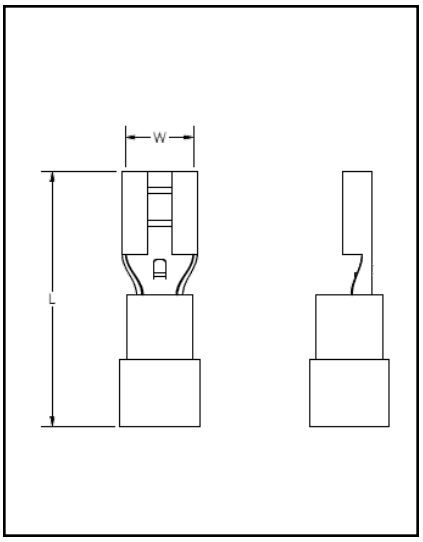

Features & Benefits

- Sleeved barrel
- Insulated connectors
  - ◊ Eliminate the need for post installation insulation
- Funnel entry barrel opening
  - ◊ Assures quick and easy wire insertion
- Dimpled female socket detent
  - ◊ Ensures firm grip

(Mates with Type QN-M Male Disconnects)

Standard Catalog Number	Std. Pkg. Qty	Wire Range	NEMA Tab Size	L	W	Installation Tool *	Wire Strip Length	Bulk Catalog Number	Bulk. Pkg. Qty.
QN18F11X02D	100	16 - 22	0.11 X 0.02	0.77	0.11	MRE1022NV Y10D Y1022	3/8"	**QN18F11X02B**	1000
QN18F18X02D			0.19 X 0.02	0.79	0.19			**QN18F18X02B**	
QN18F25X03D			0.25 X 0.03	0.87	0.25			**QN18F25X03B**	
QN14F11X02D	100	14 - 16	0.11 X 0.02	0.77	0.11			**QN14F11X02B**	
QN14F18X02D			0.19 X 0.02	0.79	0.19			**QN14F18X02B**	
QN14F25X03D			0.25 X 0.03	0.87	0.25			**QN14F25X03B**	
QN10F18X02D*	50	12 - 10	0.19 X 0.02	0.87	0.19			**QN10F18X02B**	
QN10F25X03D			0.25 X 0.03	0.95	0.25			**QN10F25X03B**	

* Not cULus.

Blue highlighted items are industry standard and most frequently ordered.

TYPE FQN-M FINGRIP™

NYLON FULLY INSULATED MALE QUICK DISCONNECTS

Material: Tin-Plated Brass

600 Volts Max., 105° C Max.

Nylon Fully Insulated Quick disconnects allows for quickly connecting or dis-connecting a terminal. The front end of the terminal has a female-type receptacle which allows the terminal to slide onto and off of a male blade.

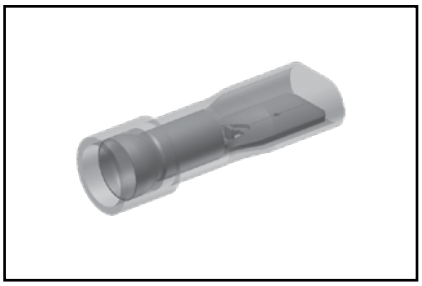

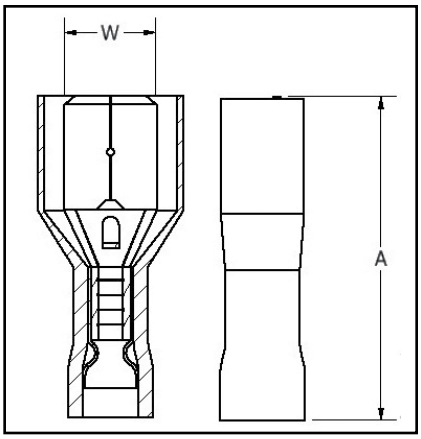

Features & Benefits

- Fully insulated connectors
  - ◊ Eliminate the need for post installation insulation
- Funnel entry barrel opening
  - ◊ Assures quick and easy wire insertion
- Dimpled female socket detent
  - ◊ Ensures firm grip

Catalog Number	Wire Range	NEMA Tab Size	L	W	Installation Tool *	Wire Strip Length	Bulk Catalog Number
FQN18M18X02D*	18 - 22	0.19 X 0.02	0.88	0.19	MRE1022NV Y10D Y1022	3/8"	—
FQN18M25X03D	18 - 22	0.25 X 0.03	0.80	0.25			**FQN18M25X03B**
FQN14M18X02D*	14 - 16	0.19 X 0.02	0.80	0.19			—
FQN14M25X03D	14 - 16	0.25 X 0.03	0.88	0.25			**FQN14M25X03B**
FQN10M25X03D	10 - 12	0.25 X 0.03	0.96	0.25	MRE1022NV		**FQN10M25X03B**

* Not cULus.

TYPE YHSQ-M

HYDENT™ HEAT SHRINK MALE QUICK DISCONNECTS

For Use on Copper Conductor

Standard crimp terminals leave the wire exposed allowing in moisture or other contaminants which can result in corrosion. Corrosion reduces the amount of current the wire can carry safely. The integrity of the electrical system can be compromised when unsealed electrical connections are utilized. Heat shrink terminals provide a durable seal blocking out contaminants ensuring a better connection.

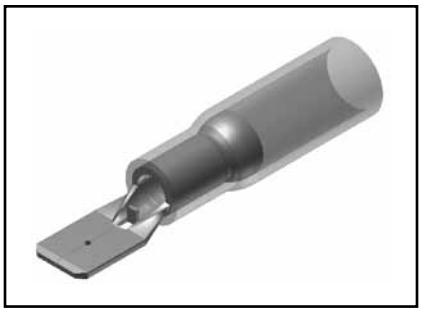

Features & Benefits

- Made from pure copper, annealed for maximum strength
- Color-coded, imprinted with wire size
- Serrated barrels offer maximum wire contact and tensile strength
- Electro tin plated for corrosion resistance

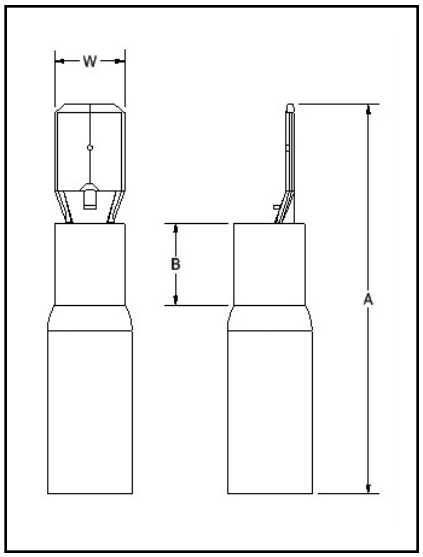

Catalog No. (100/bag)	Catalog No. (20/bag)	Conductor Size	NEMA Tab Size	Dimensions			Installation Tooling	Wire Strip Length
				B	W	A		
YHSQ18M25X03	**YHSQ18M250X03RK**	22-18 AWG	0.250 X 0.032	0.22	0.25	1.25	MR22	5/16"
YHSQ14M25X03	**YHSQ14M25X03RK**	16-14 AWG	0.250 X 0.032			1.25		
YHSQ10M25X03	**YHSQ10M25X03RK**	12-10 AWG	0.250 X 0.032			1.19		

Blue highlighted items are industry standard and most frequently ordered.

TYPE YHSQ-F

HYDENT™ HEAT SHRINK FEMALE QUICK DISCONNECTS

For Use on Copper Conductor

Standard crimp terminals leave the wire exposed allowing in moisture or other contaminants which can result in corrosion. Corrosion reduces the amount of current the wire can carry safely. The integrity of the electrical system can be compromised when unsealed electrical connections are utilized. Heat shrink terminals provide a durable seal blocking out contaminants ensuring a better connection.

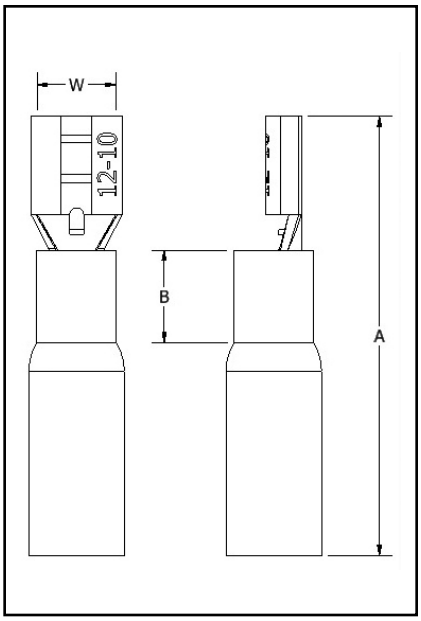

Features & Benefits

- Made from pure copper, annealed for maximum strength
- Color-coded, imprinted with wire size
- Serrated barrels offer maximum wire contact and tensile strength
- Electro tin plated for corrosion resistance

Catalog No. (100/bag)	Catalog No. (20/bag)	Conductor Size	Tab Size	Dimensions			Installation Tooling	Wire Strip Length
				B	W	A		
YHSQ18F11X02D	—	22-18 AWG	0.110 X 0.020	0.17	0.16	1.28	MR22	5/16"
YHSQ18F18X02D	—		0.187 X 0.020	0.17	0.23	1.28		
YHSQ18F25X03	YHSQ18F25X03RK		0.250 X 0.032	0.22	0.30	1.27		
YHSQ14F11X02D	—	16-14 AWG	0.110 X 0.020	0.17	0.16	1.28		
YHSQ14F18X02D	—		0.187 X 0.020	0.17	0.23	1.28		
YHSQ14F25X03	YHSQ14F25X03RK		0.250 X 0.032	0.22	0.30	1.27		
YHSQ10F25X03	YHSQ10F25X03RK	12-10 AWG	0.250 X 0.032	0.22	0.30	1.27		

Blue highlighted items are industry standard and most frequently ordered.

TYPE YHSFQ-F

HYDENT™ HEAT SHRINK FULLY INSULATED QUICK DISCONNECTS

For Use on Copper Conductor

Standard crimp terminals leave the wire exposed allowing in moisture or other contaminants which can result in corrosion. Corrosion reduces the amount of current the wire can carry safely. The integrity of the electrical system can be compromised when unsealed electrical connections are utilized. Heat shrink terminals provide a durable seal blocking out contaminants ensuring a better connection.

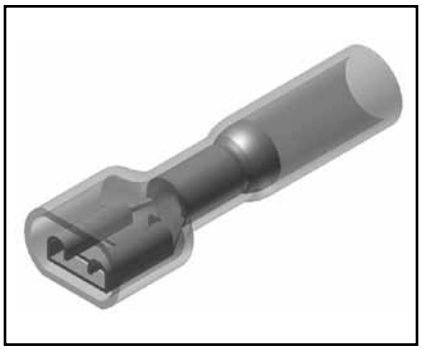

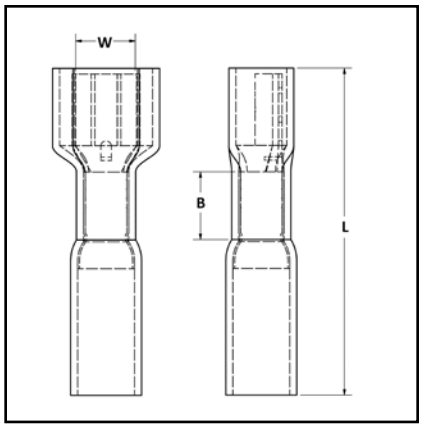

Features & Benefits

- Made from pure copper, annealed for maximum strength
- Color-coded, imprinted with wire size
- Serrated barrels offer maximum wire contact and tensile strength
- Electro tin plated for corrosion resistance

Catalog No. (100/bag)	Catalog No. (20/bag)	Conductor Size	NEMA Tab Size	Dimensions			Installation Tooling	Wire Strip Length
				B	W	L		
YHSFQ18F25X03	YHSFQ18F25X03RK	22-18 AWG	0.250 X 0.032	0.22	0.38	1.28	MR22	5/16"
YHSFQ14F25X03	YHSFQ14F25X03RK	16-14 AWG	0.250 X 0.032					
YHSFQ10F25X03	YHSFQ10F25X03RK	12-10 AWG	0.250 X 0.032			1.34		

TYPE PG

MALE/FEMALE COMBINATION QUICK DISCONNECTS

Material: Tin Plated Brass

Piggy-back connectors or piggy-back terminals are designed to allow for additional terminals to be connected.

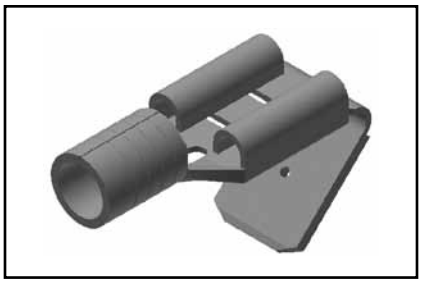

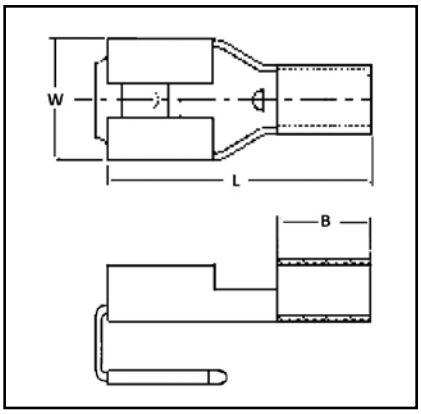

Features & Benefits

- Sleeved Barrel
- Combination connector - allows for more than one connection to a circuit
- Funnel entry barrel opening - assures quick and easy wire insertion
- Dimpled female socket detent - ensure firm grip

Catalog Number	Wire Range	NEMA Tab Size	B	L	W	Installation Tool	Wire Strip Length
PG1825X03D	22 - 18 AWG	0.250 X 0.032	0.17	0.79	0.25	MRE1022B Y10D Y10-22	3/8"
PG1425X03D	16 - 14 AWG		0.17	0.79			
PG1025X03D	12 - 10 AWG		0.27	0.89			

TYPE PGHS

HEAT SHRINK COMBINATION DISCONNECT TERMINALS

For Use on Copper Conductor

Standard crimp terminals leave the wire exposed allowing in moisture or other contaminants which can result in corrosion. Corrosion reduces the amount of current the wire can carry safely. The integrity of the electrical system can be compromised when unsealed electrical connections are utilized. Heat shrink terminals provide a durable seal blocking out contaminants ensuring a better connection.

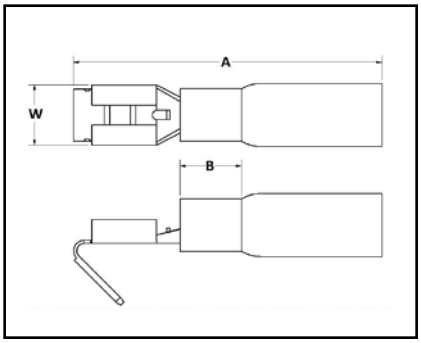

Features & Benefits

- Made from pure copper, annealed for maximum strength
- Color-coded, imprinted with wire size
- Serrated barrels offer maximum wire contact and tensile strength
- Electro tin plated for corrosion resistance

Catalog Number	Wire Range	NEMA Tab Size	A	B	W	Installation Tool	Wire Strip Length
PGHS1825X03D	22 - 18 AWG	0.250 X 0.032	0.91	0.17	0.25	Y10D Y1022 MR22	5/16"
PGHS1425X03D	16 - 14 AWG	0.250 X 0.032	0.91	0.17	0.25	Y10D Y1022	5/16"

Blue highlighted items are industry standard and most frequently ordered.

TYPE PGP FINGRIP™

VINYL MALE/FEMALE COMBINATION QUICK DISCONNECTS

Material: Tin-Plated Brass
600 Volts Max. 105° C Max.

Piggy-back connectors or piggy-back terminals are designed to allow for additional terminals to be connected.

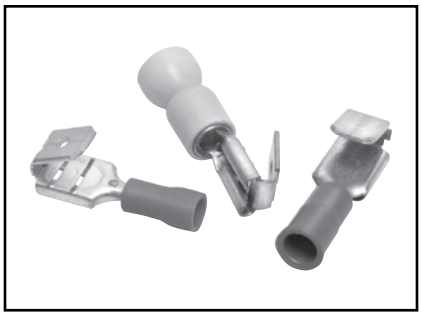

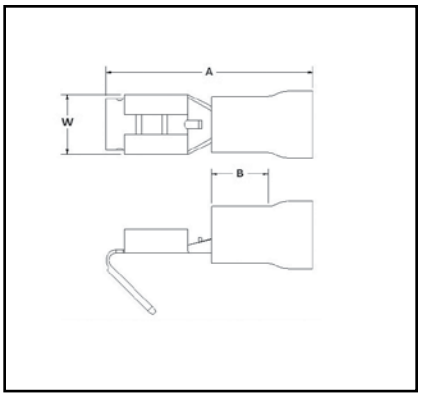

Features & Benefits

- Sleeved barrel
- Combination connector
  - ◊ Allows for more than one connection to a circuit
- Funnel entry barrel opening
  - ◊ Assures quick and easy wire insertion
- Dimpled female socket detent
  - ◊ Ensures firm grip

Standard Catalog Number	Wire Range	NEMA Tab Size	A	B	W	Installation Tool*	Wire Strip Length	Bulk Catalog Number
PGP1825X03D	18 - 22	0.250 X 0.032	0.91	0.17	0.28	MRE1022NV Y1022	3/8"	**PGP1825X03B**
PGP1425X03D	14 - 16	0.250 X 0.032	0.91	0.17	0.28	MRE1022NV Y1022	3/8"	**PGP1425X03B**
PGP1025X03D	10 - 12	0.250 X 0.032	0.95	0.27	0.28	MRE1022NV Y1022	3/8"	**PGP1025X03B**

* For UL Listed applications, consult BURNDY® factory.

TYPE PGN FINGRIP™

NYLON COMBINATION DISCONNECT TERMINALS

Material: Tin-Plated Brass
600 Volts Max. 105° C Max.

Piggy-back connectors or piggy-back terminals are designed to allow for additional terminals to be connected.

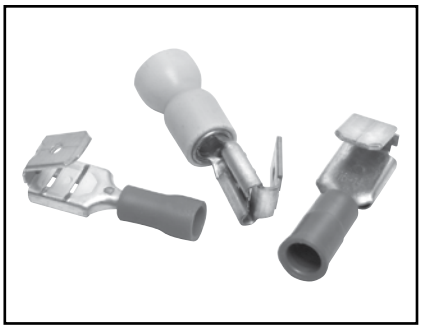

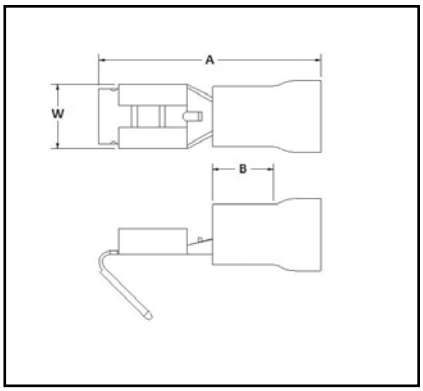

Features & Benefits

- Sleeved barrel
- Combination connector
  - ◊ Allows for more than one connection to a circuit
- Funnel entry barrel opening
  - ◊ Assures quick and easy wire insertion
- Dimpled female socket detent
  - ◊ Ensures firm grip

Standard Catalog Number	Wire Range	NEMA Tab Size	A	B	W	Installation Tool*	Wire Strip Length	Bulk Catalog Number
PGN1825X03D	18 - 22	0.250 X 0.032	0.90	0.17	0.28	MRE1022NV Y10D	3/8"	**PGN1825X03B**
PGN1425X03D	14 - 16	0.250 X 0.032	0.90	0.17	0.28	MRE1022NV Y10D	3/8"	**PGN1425X03B**
PGN1025X03D	10 - 12	0.250 X 0.032	0.95	0.27	0.28	MRE1022NV Y10D	3/8"	**PGN1025X03B**

* For UL Listed applications, consult BURNDY® factory.

TYPE FLN FINGRIP™

NYLON FLAG-STYLE FEMALE QUICK DISCONNECT

Material: Tin-Plated Brass

Flag style female quick disconnects provide quick, reliable snap-together interconnections without the use of tools. Side entrance chamfer to permit connections of ninety degrees without bending the wire.

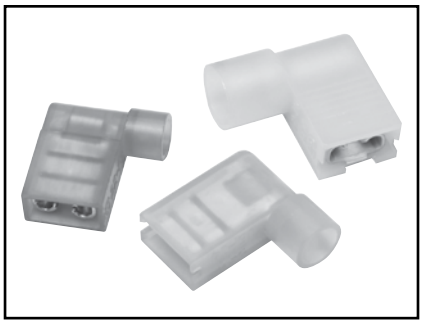

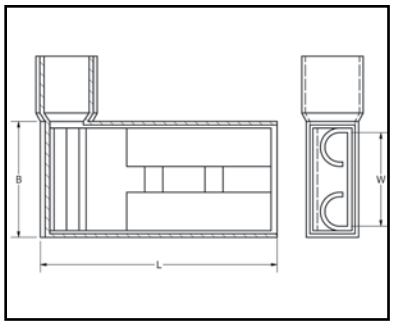

Features & Benefits

- Dimpled female socket detent
  ◊ Ensures firm grip

Catalog Number	Wire Range	NEMA Tab Size	L	B	W	Installation Tool	Wire Strip Length
FLN1825X03D	22 - 18	0.250 X 0.032	0.60	0.40	0.25	MRE1422FLN	3/8"
FLN1425X03D	16 - 14	0.250 X 0.032	0.63	0.40	0.25	MRE1422FLN	3/8"
FLN1025X03D*	12 - 10	0.250 X 0.032	0.64	0.40	0.25	MRE1422FLN	3/8"

* Not cULus.

TYPE FL FINGRIP™

FLAG-STYLE FEMALE QUICK DISCONNECT

Material: Tin-Plated Brass

Flag style female quick disconnects provide quick, reliable snap-together interconnections without the use of tools. Side entrance chamfer to permit connections of ninety degrees without bending the wire.

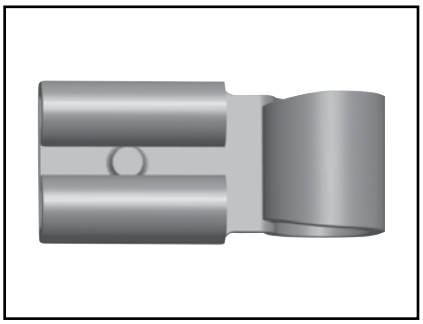

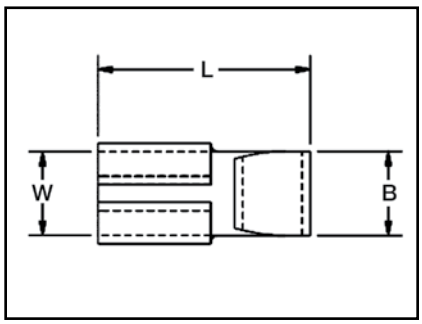

Features & Benefits

- Dimpled female socket detent
  ◊ Ensures firm grip

Catalog Number	Std. Pkg. Qty	Wire Range	NEMA Tab Size	L	B	W	Installation Tool	Wire Strip Length	Bulk Catalog Number	Bulk Pkg. Qty
FL1825X03D	100	18 - 22	0.250 x 0.032	0.67	0.17	0.25	BTH-450	3/8"	**FL1825X03B**	1000
FL1425X03D	100	14 - 16	0.250 x 0.032	0.67	0.17	0.25	BTH-450	3/8"	**FL1425X03B**	1000
FL1025X03D	50	10 - 12	0.250 x 0.032	0.67	0.17	0.25	BTH-450	3/8"	**FL1025X03B**	1000

Blue highlighted items are industry standard and most frequently ordered.

TYPE YAIT

QIKTAP™

QIKTAP™ Splices

QIKTAP™ connectors are quick and convenient. Makes quick splices with no stripping, twisting, soldering or special tooling.

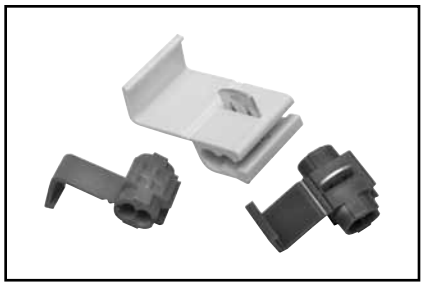

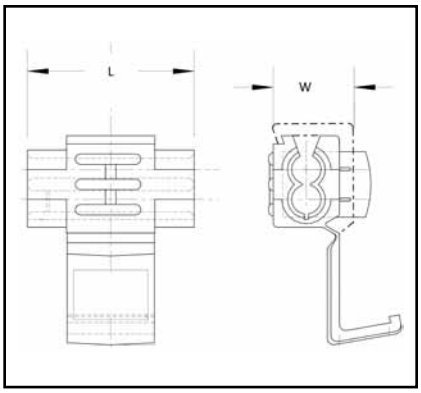

Features & Benefits

- Easy to Use
- Saves time
- Color Coded
- No special tools required (just squeeze to install)
- Dependable connection

Catalog Number	Wire Range	L	W
YAIT2218R	22 - 18	0.80	0.37
YAIT1814B	16 - 14	0.80	0.37
YAIT1210Y	12 - 10	0.80	0.37

TYPE TTV

QIKTAP™

Insulation Piercing Style, Tap Connector

TTV type electrical connectors allow for an easy tap off of a run conductor. This tap allows for a male quick disconnect to complete the tap connection. This is especially useful when multiple reconnections could be necessary.

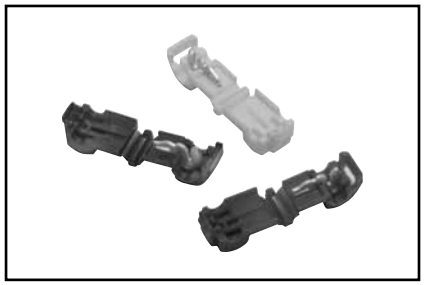

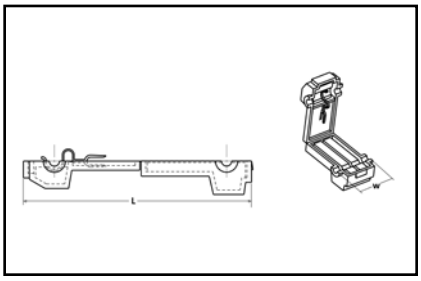

Features & Benefits

- Allows user to tap into a wire in mid-span without cutting or stripping the wire
- Connector then mates with a .250 inch male quick disconnect tab, making a reusable quick-connect wiring termination

Catalog Number	Wire Range	Insulation Color	W	L
TTV18	22 - 18 AWG	Red	0.38	1.44
TTV14	16 - 14 AWG	Blue	0.38	1.44
TTV10	12 - 10 AWG	Yellow	0.38	1.44

Blue highlighted items are industry standard and most frequently ordered.

TYPE YATW-P

HYDENT™

Terminal - Vinyl Insulated, Three-Way Ring Tongue

Insulated 3-way terminal is constructed of 3 ring terminals riveted together through the stud holes. Allows multiple wires to be quickly and securely connected.

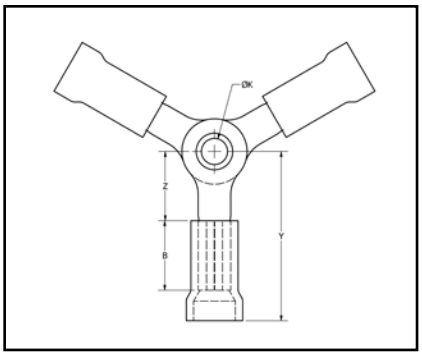

Features & Benefits

- Robust design of a standard insulated terminal integrated into one connector
- Standard BURNDY® tooling to install

Catalog Number	Wire Range	Insulation Type	Insulation Color	B	Z	K	Y	Installation Tooling	Wire Strip Length
YATW18P	22 - 18 AWG	Vinyl	Red	0.25	0.23	0.15	0.73	MRE1022NV Y1022	5/16"
YATW14P	16 - 14 AWG	Vinyl	Blue	0.25	0.28	0.15	0.78	MRE1022NV Y1022	5/16"
YATW10P	12 - 10 AWG	Vinyl	Yellow	0.25	0.28	0.15	0.84	MRE1022NV Y1022	5/16"

TYPE YATW-N

HYDENT™

Terminal - Nylon Insulated, Three-Way Ring Tongue

600 Volts Max., 105° C Max.

Insulated 3-way terminal is constructed of 3 ring terminals riveted together through the stud holes. Allows multiple wires to be quickly and securely connected.

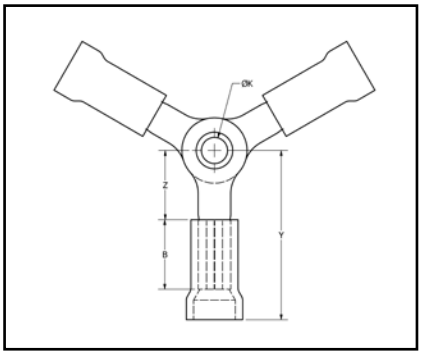

Features & Benefits

- Robust design of a standard insulated terminal integrated into one connector
- Standard BURNDY® tooling to install

Catalog Number	Wire Range	Insulation Type	Insulation Color	B	Z	K	Y	Installation Tooling	Wire Strip Length
YATW18N	22 - 18 AWG	2 Piece Nylon	Red	0.25	0.23	0.15	0.73	MRE1022NV Y10D Y1022	5/16"
YATW14N	16 - 14 AWG	2 Piece Nylon	Blue	0.25	0.28	0.15	0.78	MRE1022NV Y10D Y1022	5/16"
YATW10N	12 - 10 AWG	2 Piece Nylon	Yellow	0.25	0.28	0.15	0.84	MRE1022NV Y10D Y1022	5/16"

Blue highlighted items are industry standard and most frequently ordered.

TYPE YATW-NG

HYDENT™

Terminal - Nylon Grip Insulated, Three-Way Ring Tongue

600 Volts Max., 105° C Max.

Insulated 3-way terminal is constructed of 3 ring terminals riveted together through the stud holes. Allows multiple wires to be quickly and securely connected.

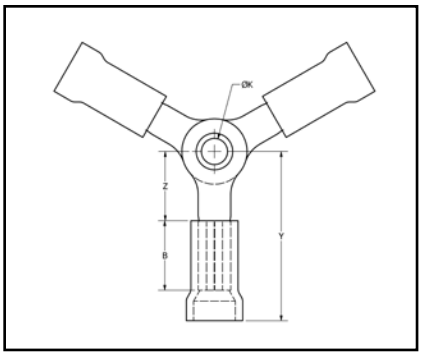

Features & Benefits

- Robust design of a standard insulated terminal integrated into one connector
- Standard BURNDY® tooling to install

Catalog Number	Wire Range	Insulation Type	Insulation Color	B	Z	K	Y	Installation Tooling	Wire Strip Length
YATW18NG	22 - 18 AWG	3 Piece Nylon	Red	0.25	0.23	0.15	0.73	MRE1022NV Y10D Y1022	5/16"
YATW14NG	16 - 14 AWG	3 Piece Nylon	Blue	0.25	0.28	0.15	0.78	MRE1022NV Y10D Y1022	5/16"
YATW10NG	12 - 10 AWG	3 Piece Nylon	Yellow	0.25	0.28	0.15	0.84	MRE1022NV Y10D Y1022	5/16"

TYPE YATW-HS

HYDENT™

Terminal - Fully Insulated Heat Shrink, Three-Way Ring Tongue

Insulated 3-way terminal is constructed of 3 ring terminals riveted together through the stud holes. Allows multiple wires to be quickly and securely connected.

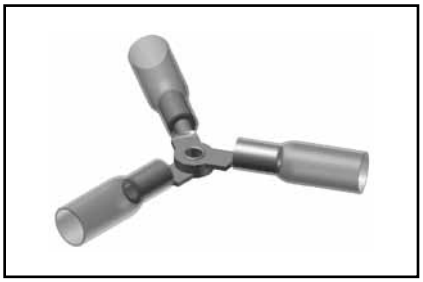

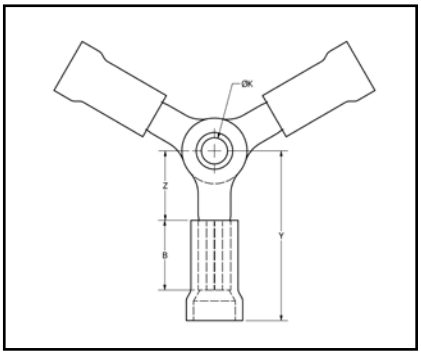

Features & Benefits

- Robust design of a standard insulated terminal integrated into one connector
- Standard BURNDY® tooling to install

Catalog Number	Wire Range	Insulation Type	Insulation Color	B	Z	K	Y	Installation Tooling	Wire Strip Length
YATW18HS	22 - 18 AWG	Heat Shrink	Red	0.25	0.23	0.15	1.26	MR22 Y10D Y1022	5/16"
YATW14HS	16 - 14 AWG	Heat Shrink	Blue	0.25	0.28	0.15	1.31	MR22 Y10D Y1022	5/16"
YATW10HS	12 - 10 AWG	Heat Shrink	Yellow	0.25	0.28	0.15	1.37	MR22 Y10D Y1022	5/16"

Blue highlighted items are industry standard and most frequently ordered.

TYPE YAFW-P

HYDENT™

Terminal - Vinyl Insulated,
Four-Way Ring Tongue

Insulated 4-way terminal is constructed of 4 ring terminals riveted together through the stud holes. Allows multiple wires to be quickly and securely connected.

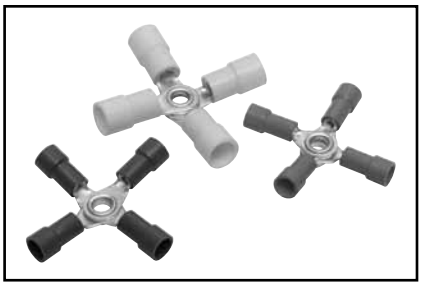

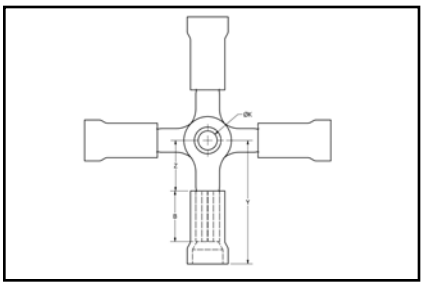

Features & Benefits

- Robust design of a standard insulated terminal integrated into one connector
- Standard BURNDY® tooling to install

Catalog Number	Wire Range	Insulation Type	Insulation Color	B	Z	K	Y	Installation Tooling	Wire Strip Length
YAFW18P	22 - 18 AWG	Vinyl	Red	0.25	0.23	0.15	0.73	MRE1022NV Y1022	5/16"
YAFW14P	16 - 14 AWG	Vinyl	Blue	0.25	0.28	0.15	0.78	MRE1022NV Y1022	5/16"
YAFW10P	12 - 10 AWG	Vinyl	Yellow	0.25	0.28	0.15	0.84	MRE1022NV Y1022	5/16"

TYPE YAFW-N

HYDENT™

Terminal - Nylon Insulated,
Four-Way Ring Tongue

600 Volts Max., 105° C Max.

Insulated 4-way terminal is constructed of 4 ring terminals riveted together through the stud holes. Allows multiple wires to be quickly and securely connected.

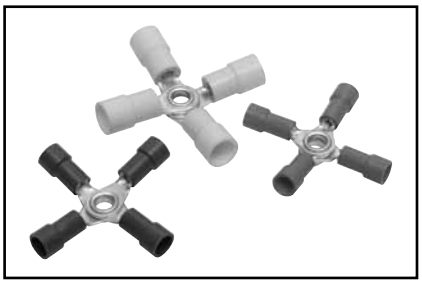

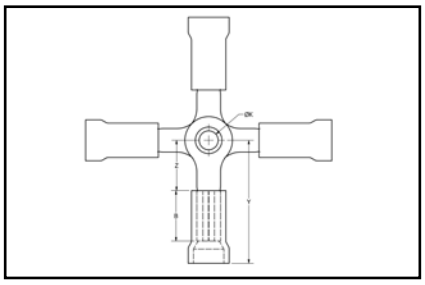

Features & Benefits

- Robust design of a standard insulated terminal integrated into one connector
- Standard BURNDY® tooling to install

Catalog Number	Wire Range	Insulation Type	Insulation Color	B	Z	K	Y	Installation Tooling	Wire Strip Length
YAFW18N	22 - 18 AWG	2 Piece Nylon	Red	0.25	0.23	0.15	0.73	MRE1022NV Y10D Y1022	5/16"
YAFW14N	16 - 14 AWG	2 Piece Nylon	Blue	0.25	0.28	0.15	0.78	MRE1022NV Y10D Y1022	5/16"
YAFW10N	12 - 10 AWG	2 Piece Nylon	Yellow	0.25	0.28	0.15	0.84	MRE1022NV Y10D Y1022	5/16"

Blue highlighted items are industry standard and most frequently ordered.

TYPE YAFW-NG

HYDENT™

Terminal - Nylon Grip Insulated, Four-Way Ring Tongue

600 Volts Max., 105° C Max.

Insulated 4-way terminal is constructed of 4 ring terminals riveted together through the stud holes. Allows multiple wires to be quickly and securely connected.

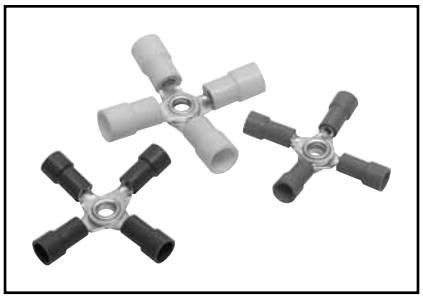

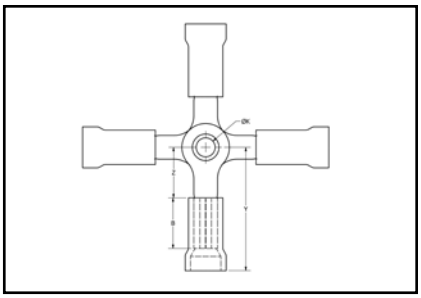

Features & Benefits

- Robust design of a standard insulated terminal integrated into one connector
- Standard BURNDY® tooling to install

Catalog Number	Wire Range	Insulation Type	Insulation Color	B	Z	K	Y	Installation Tooling	Wire Strip Length
YAFW18NG	22 - 18 AWG	3 Piece Nylon	Red	0.25	0.23	0.15	0.73	MRE1022NV Y10D Y1022	5/16"
YAFW14NG	16 - 14 AWG	3 Piece Nylon	Blue	0.25	0.28	0.15	0.78	MRE1022NV Y10D Y1022	5/16"
YAFW10NG	12 - 10 AWG	3 Piece Nylon	Yellow	0.25	0.28	0.15	0.84	MRE1022NV Y10D Y1022	5/16"

TYPE YAFW-HS

HYDENT™

Terminal - Fully Insulated Heat Shrink, Four-Way Ring Tongue

Insulated 4-way terminal is constructed of 4 ring terminals riveted together through the stud holes. Allows mutiple wires to be quickly and securely connected.

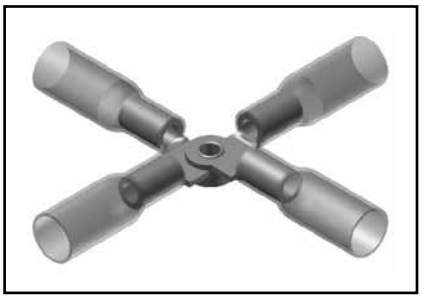

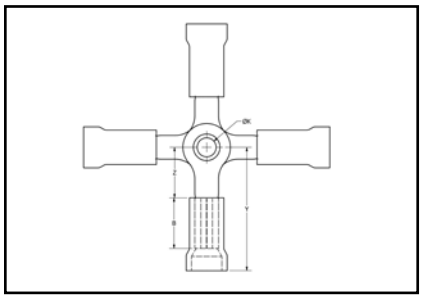

Features & Benefits

- Robust design of a standard insulated terminal integrated into one connector
- Standard BURNDY® tooling to install

Catalog Number	Wire Range	Insulation Type	Insulation Color	B	Z	K	Y	Installation Tooling	Wire Strip Length
YAFW18HS	22 - 18 AWG	Heat Shrink	Red	0.25	0.25	0.15	1.26	MR22 Y10D Y1022	5/16"
YAFW14HS	16 - 14 AWG	Heat Shrink	Blue	0.25	0.25	0.15	1.31	MR22 Y10D Y1022	5/16"
YAFW10HS	12 - 10 AWG	Heat Shrink	Yellow	0.25	0.25	0.15	1.37	MR22 Y10D Y1022	5/16"

Blue highlighted items are industry standard and most frequently ordered.

TYPE BULM-P

Vinyl Insulated Male Bullet-style Connectors

Type BULM-P Male Bullet connectors are vinyl insulated connectors with a flared entry for easier wire insertion. Color-coded barrels for easy wire size identification.

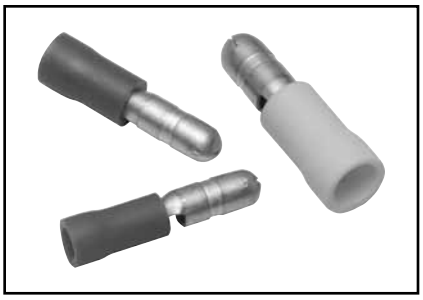

Features & Benefits

- Vinyl insulation
- Color-coded barrels
- Flared entry provides easier use

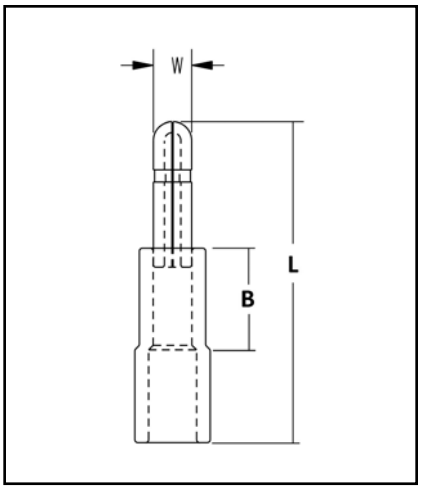

Catalog Number	Wire Range	L	W	B	Tooling	Wire Strip Length
BULM18P	22-18	0.83	0.16	0.21	MRE1022NV Y1022	5/16"
BULM14P	16-14	0.83	0.16	0.21		5/16"
BULM10P	12-10	0.83	0.20	0.21		5/16"

TYPE BULM-N

Nylon Insulated Male Bullet-style Connectors

600 Volts Max., 105° C Max.

Type BULM-N Male Bullet connectors are nylon insulated connectors with a flared entry for easier wire insertion. Color-coded barrels for easy wire size identification.

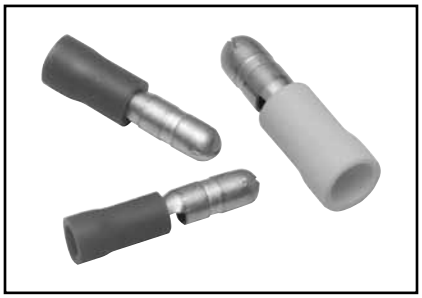

Features & Benefits

- Nylon insulation
- Color-coded barrels
- Flared entry provides easier use

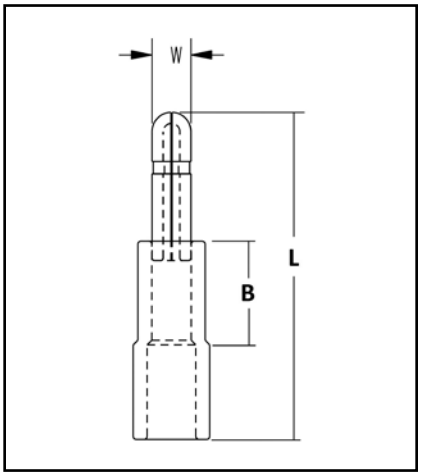

Catalog Number	Wire Range	L	B	W	Installation Tooling	Wire Strip Length
BULM18N	22 - 18	0.83	0.21	0.16	MRE1022NV Y10D Y1022	5/16"
BULM14N	16 - 14	0.83	0.21	0.16		5/16"

Blue highlighted items are industry standard and most frequently ordered.

TYPE BULM-NG

Nylon Grip Insulated Male Bullet-style Connectors

600 Volts Max., 105° C Max.

Type BULM-NG Male Bullet connectors are nylon grip insulated connectors with a flared entry for easier wire insertion. Color-coded barrels for easy wire size identification.

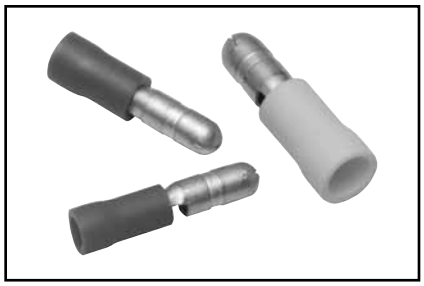

Features & Benefits

- Nylon grip insulation
- Color-coded barrels
- Flared entry provides easier use

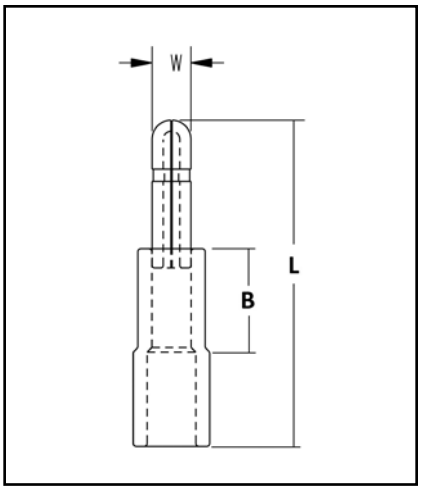

Catalog Number	Wire Range	L	B	W	Installation Tooling	Wire Strip Length
BULM18NG	22 - 18	0.83	0.21	0.16	MRE1022NV Y10D Y1022	5/16"
BULM14NG	16 - 14	0.83	0.21	0.16		5/16"

TYPE BULM-HS

Heat Shrink Insulated Male Bullet-style Connectors

Type BULM-HS Male Bullet connectors are heat shrink insulated connectors with a flared entry for easier wire insertion. Color-coded barrels for easy wire size identification.

Features & Benefits

- Heat Shrink insulation
- Color-coded barrels
- Flared entry provides easier use

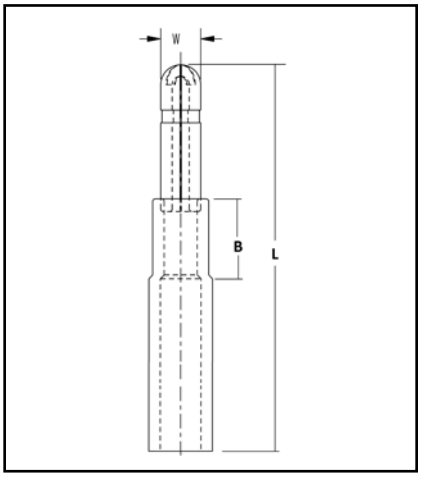

Catalog Number	Wire Range	L	B	W	Installation Tooling	Wire Strip Length
BULM18HS	22 - 18	1.30	0.21	0.16	MR22 Y10D Y1022	5/16"
BULM14HS	16 - 14	1.30	0.21	0.16		5/16"

Blue highlighted items are industry standard and most frequently ordered.

TYPE BULF-P

Vinyl Insulated Female Bullet-style Connectors

Type BULF-P Female Bullet vinyl insulated connectors mate with type BULM-P Male connectors. Flared insulation entry for easier wire insertion. Color-coded for wire size identification. Installed with standard BURNDY® tooling.

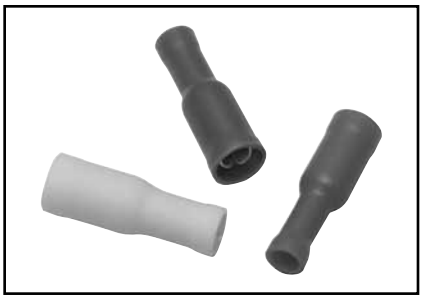

Features & Benefits

- Vinyl insulated
- Color-coded barrels
- Flared entry
- Uses standard BURNDY® tooling

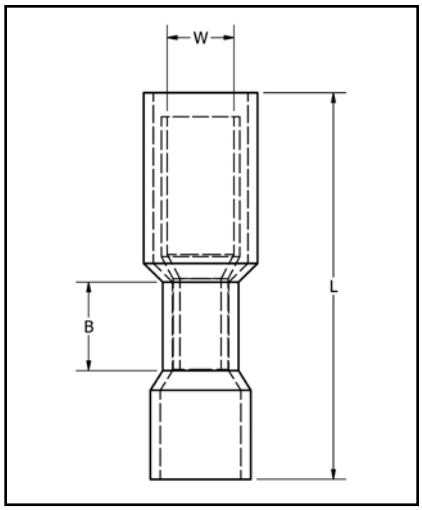

Catalog Number	Wire Range	L	B	W	Installation Tooling	Wire Strip Length
BULF18P	22 - 18	0.89	0.21	0.16	MRE1022NV Y1022	5/16"
BULF14P	16 - 14	0.89	0.21	0.16		5/16"
BULF10P	12 - 10	0.89	0.20	0.20		5/16"

TYPE BULF-N

Nylon Insulated Female Bullet-style Connectors

600 Volts Max., 105° C Max.

Type BULF-N Female Bullet nylon insulated connectors mate with BULM-N Male connectors. Flared insulation for easier wire insertion. Color-coded for wire size identification. Installed with standard BURNDY® tooling.

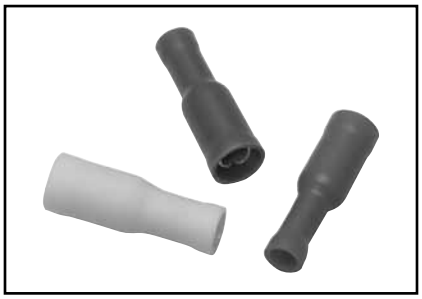

Features & Benefits

- Nylon insulation
- Color-coded barrels
- Flared entry
- Uses standard BURNDY® tooling

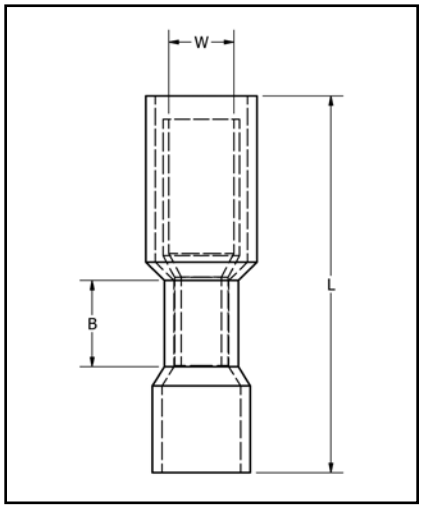

Catalog Number	Wire Range	L	B	W	Installation Tooling	Wire Strip Length
BULF18N	22 - 18	0.89	0.21	0.16	MRE1022NV Y10D Y1022	5/16"
BULF14N	16 - 14	0.89	0.21	0.16		5/16"

Blue highlighted items are industry standard and most frequently ordered.

TYPE BULF-NG

Nylon Grip Insulated Female Bullet-style Connectors

600 Volts Max., 105° C Max.

Type BULF-NG Female Bullet nylon grip insulated connectors mate with type BULM-NG Male connectors. Flared insulation entry for easier wire insertion. Color-coded for wire size identification. Installed with standard BURNDY® tooling.

Features & Benefits

- Nylon Grip insulation
- Color-coded barrels
- Flared entry
- Uses standard BURNDY® tooling

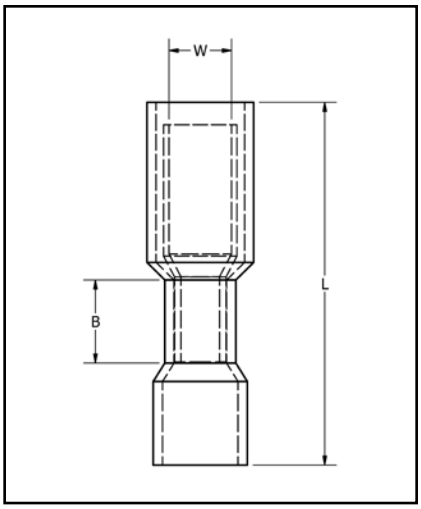

Catalog Number	Wire Range	L	B	W	Installation Tooling	Wire Strip Length
BULF18NG	22 - 18	0.89	0.21	0.16	MRE1022NV Y10D Y1022	5/16"
BULF14NG	16 - 14	0.89	0.21	0.16		5/16"

TYPE BULF-HS

Heat Shrink Insulated Female Bullet-style Connectors

Type BULF-HS Female Bullet heat shrink insulated connectors mate with type BULM-HS connectors. Flared insulation entry for easier wire insertion. Color-coded for wire size identification. Installed with standard BURNDY® tooling.

Features & Benefits

- Heat Shrink insulation
- Color-coded barrels
- Flared entry
- Uses standard BURNDY® tooling

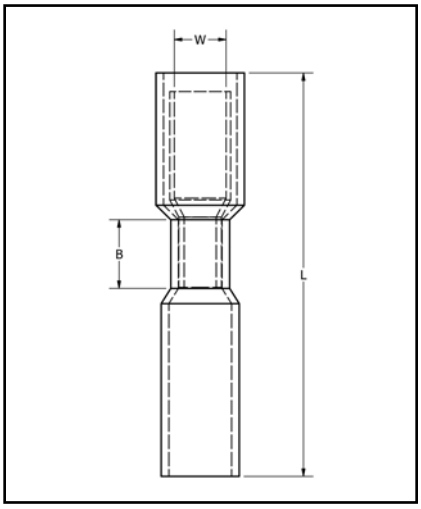

Catalog Number	Wire Range	L	B	W	Installation Tooling	Wire Strip Length
BULF18HS	22 - 18	1.40	0.21	0.16	MR22 Y10D Y1022	5/16"
BULF14HS	16 - 14	1.40	0.21	0.16		5/16"
BULF10HS	12 - 10	1.40	0.20	0.20		5/16"

Blue highlighted items are industry standard and most frequently ordered.

TYPE PTV

VINYLUG™

Pin Terminal

Material: Tin-Plated Brass

Insulated Pin Terminals are electrical connectors used to terminate stranded wires, creating a quality, reliable connection by ensuring each wire strand conducts curent when properly crimped. This is especially useful when multiple reconnections could be necessary within terminal blocks or other similar devices. No breakage of wire strands when wire is bent, under stress or in a vibration environment.

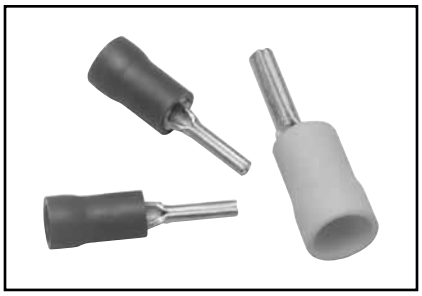

Features & Benefits

- Provides an easy and effective way to terminate stranded wire into European/ metric-style terminal blocks

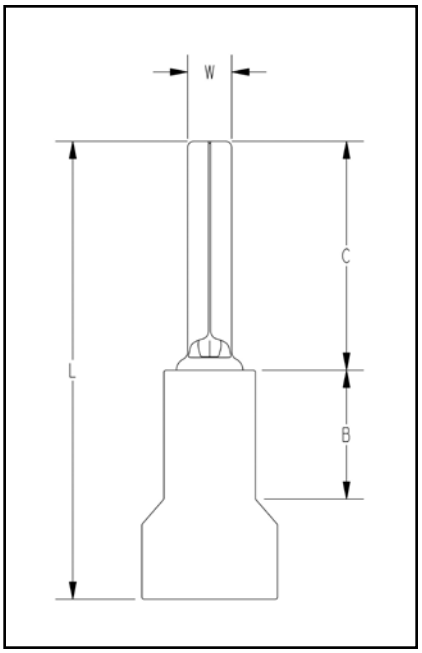

Catalog Number	Wire Range	B	C	L	W	Installation Tooling	Wire Strip Length
PTV18	22 - 18 AWG	0.19	0.41	0.80	0.07	MRE1022NV Y1022	5/16"
PTV14	16 - 14 AWG	0.19	0.41	0.80	0.07		5/16"
PTV10	12 - 10 AWG	0.27	0.50	0.97	0.11		5/16"

Blue highlighted items are industry standard and most frequently ordered.

TYPE YF-UI

BARE FERRULES

For Use On Copper Conductor

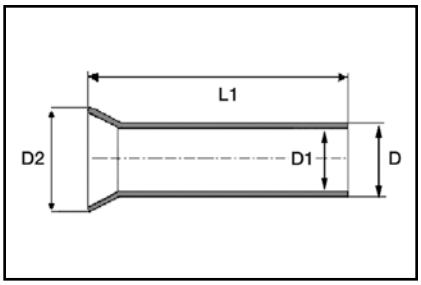

Wire ferrules are also known as cord end terminals or bootlace ferrules. These are electrical connectors used to terminate stranded wires. These terminals are made of electrolytically tin plated copper, uninsulated ferrules are designed to form neat end terminations to multi-strand cables or wires. Smooth funnel entry assists in wire insertion. Specifically designed to aid in termination of extra flexible fine stranded conductor, provides enhanced flexibility relating to wire termination and management. A positive contact surface helps ensure system integrity.

Features & Benefits

- Made of electrolytic copper, tin plated
- Seamless barrels
- Smooth funnel entry to make wire insertion easier
- RoHS compliant

Catalog Number	Wire Size		Dimensions in Inches				Recommended Tooling
	AWG	mm²	L1 Dim (in)	D Dim (in)	D1 Dim (in)	D2 Dim (in)	
YF2807UI	28	0.14	0.28	0.04	0.03	0.06	YF3206TOOL
YF2605UI	26	0.25	0.19	0.04	0.03	0.06	YF3206TOOL YF2610TOOL
YF2607UI	26	0.25	0.28	0.04	0.03	0.06	
YF2405UI	24	0.34	0.19	0.05	0.03	0.06	
YF2407UI	24	0.34	0.28	0.05	0.03	0.06	
YF2206UI	22	0.50	0.24	0.05	0.04	0.09	YF3206TOOL YF2610TOOL YF2214TOOL YF2210TOOL YF2210FL
YF2208UI	22	0.50	0.32	0.05	0.04	0.07	
YF2210UI	22	0.50	0.40	0.05	0.04	0.07	
YF2212UI	22	0.50	0.40	0.05	0.04	0.07	
YF2006UI	20	0.75	0.24	0.06	0.05	0.10	
YF2010UI	20	0.75	0.39	0.06	0.05	0.08	
YF2012UI	20	0.75	0.47	0.06	0.05	0.08	
YF1806UI	18	1.00	0.24	0.07	0.06	0.11	
YF1808UI	18	1.00	0.32	0.07	0.06	0.09	
YF1810UI	18	1.00	0.39	0.07	0.06	0.09	
YF1812UI	18	1.00	0.47	0.07	0.06	0.09	
YF1607UI	16	1.50	0.28	0.08	0.07	0.09	
YF1608UI	16	1.50	0.32	0.08	0.07	0.12	
YF1610UI	16	1.50	0.39	0.08	0.07	0.12	
YF1612UI	16	1.50	0.47	0.08	0.07	0.12	
YF1618UI	16	1.50	0.71	0.08	0.07	0.12	
YF1407UI	14	2.50	0.28	0.10	0.09	0.13	
YF1408UI	14	2.50	0.32	0.10	0.09	0.13	
YF1410UI	14	2.50	0.39	0.10	0.09	0.13	
YF1412UI	14	2.50	0.47	0.10	0.09	0.13	
YF1418UI	14	2.50	0.71	0.10	0.09	0.13	
YF1209UI	12	4.00	0.35	0.13	0.11	0.15	YF3206TOOL YF2610TOOL YF2210TOOL YF2210FL
YF1212UI	12	4.00	0.47	0.13	0.11	0.17	
YF1215UI	12	4.00	0.59	0.13	0.11	0.15	
YF1218UI	12	4.00	0.71	0.13	0.11	0.15	
YF1010UI	10	6.00	0.39	0.15	0.14	0.19	YF3206TOOL YF2610TOOL YF2210TOOL YF1006TOOL YF2210FL
YF1012UI	10	6.00	0.47	0.15	0.14	0.19	
YF1015UI	10	6.00	0.59	0.15	0.14	0.19	
YF1018UI	10	6.00	0.71	0.15	0.14	0.19	

Blue highlighted items are industry standard and most frequently ordered.

TYPE YF-UI
(Continued)

BARE FERRULES

For Use On Copper Conductor

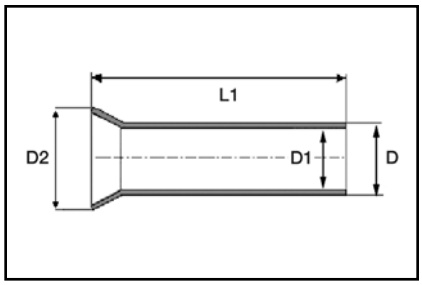

Catalog Number	Wire Size		Dimensions in Inches				Recommended Tooling
	AWG	mm²	L1 Dim (in)	D Dim (in)	D1 Dim (in)	D2 Dim (in)	
YF0812UI	8	10.00	0.47	0.19	0.18	0.29	YF3206TOOL YF1006TOOL YF0801TOOL
YF0815UI	8	10.00	0.59	0.19	0.18	0.29	
YF0818UI	8	10.00	0.71	0.19	0.18	0.29	
YF0612UI	6	16.00	0.47	0.24	0.23	0.30	
YF0615UI	6	16.00	0.59	0.24	0.23	0.30	
YF0618UI	6	16.00	0.71	0.24	0.23	0.30	
YF0625UI	6	16.00	0.98	0.24	0.23	0.30	
YF0412UI	4	25.00	0.47	0.31	0.29	0.38	YF0801TOOL YF0401TOOL
YF0415UI	4	25.00	0.59	0.31	0.29	0.38	
YF0418UI	4	25.00	0.70	0.31	0.29	0.38	
YF0420UI	4	25.00	0.79	0.31	0.29	0.38	
YF0425UI	4	25.00	0.98	0.31	0.29	0.38	
YF0432UI	4	25.00	1.26	0.31	0.29	0.38	
YF0215UI	2	35.00	0.59	0.34	0.33	0.42	
YF0220UI	2	35.00	0.79	0.34	0.33	0.42	
YF0225UI	2	35.00	0.98	0.34	0.33	0.42	
YF0232UI	2	35.00	1.26	0.34	0.33	0.42	
YF0122UI	1	50.00	0.87	0.43	0.41	0.52	
YF0125UI	1	50.00	0.98	0.43	0.41	0.52	
YF0132UI	1	50.00	1.26	0.43	0.41	0.52	
YF2/022UI	2/0	70.00	0.87	0.56	0.53	0.64	YF1/03/0TOOL
YF2/025UI	2/0	70.00	0.98	0.56	0.53	0.64	
YF2/032UI	2/0	70.00	1.26	0.56	0.53	0.64	
YF3/025UI	3/0	95.00	0.98	0.61	0.58	0.68	
YF3/030UI	3/0	95.00	1.18	0.61	0.58	0.68	
YF3/032UI	3/0	95.00	1.26	0.61	0.58	0.68	
YF4/032UI	4/0	120.00	1.26	0.70	0.70	0.81	
YF4/034UI	4/0	120.00	1.39	0.70	0.70	0.81	
YF4/040UI	4/0	120.00	1.57	0.70	0.70	0.81	YF4/0250TOOL
YF25032UI	250	150.00	1.26	0.81	0.77	0.91	
YF25040UI	250	150.00	1.57	0.81	0.77	0.91	
YF35032UI	350	185.00	1.26	0.84	0.79	0.94	Y644HSXT
YF35040UI	350	185.00	1.57	0.84	0.80	0.94	

Blue highlighted items are industry standard and most frequently ordered.

TYPE YF-I FERRULES
Series D, T & W

INSULATED FERRULES

For Use On Copper Conductor
Offered in Series D, T & W

Ferrules are electrical connectors used to terminate stranded wires, creating a quality, reliable connection by ensuring each wire strand conducts current when properly crimped. Especially useful when multiple reconnections could be necessary within terminal blocks or other similar devices. No breakage of wire strands when wire is bent, under stress or in a vibration environment. Twin ferrule designs allow two individual stranded conductors to be connected to the same termination, most beneficial in jumpering or other similar applications. Both styles (single and twin) offer the same features and benefits. The YF-TOOL series has been designed to crimp both the bare (type YF-UI) and insulated (type YF-I) ferrules.

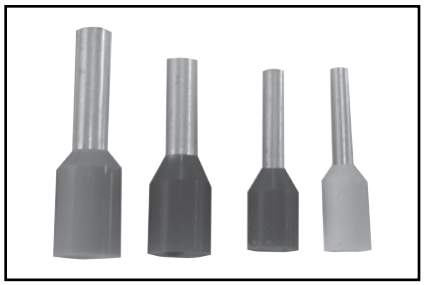

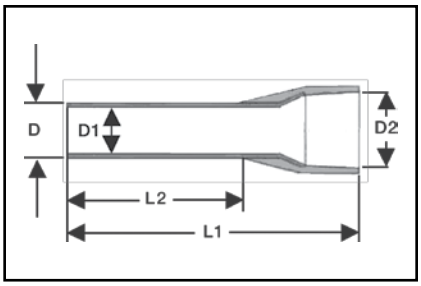

Features & Benefits

- Made of electrolytic copper, tin plated
- Smooth funnel entry to make wire insertion easier
- Secure contacting even after multiple reconnections
- Long-term contact resistance
- No fraying of strands
- No breakage of wire strands when wire is bent, under stress or in vibration environment
- RoHS compliant

W Series	D Series	T Series	Wire Size		Dimensions in Inches					Bag Qty	Tooling
			AWG	mm²	L1 (in)	L2 (in)	D (in)	D1 (in)	D2 (in)		
YF2806IW	—	YF2806IT	28	0.14	0.39	0.22	0.04	0.03	0.07	500	YF3206TOOL
YF2808IW	—	YF2808IT	28	0.14	0.49	0.32	0.04	0.03	0.04	500	
YF2606IW	YF2606ID	YF2606IT	26	0.25	0.40	0.23	0.05	0.03	0.08	500	YF3206TOOL, YF2610TOOL
YF2608IW	YF2608ID	YF2608IT	26	0.25	0.49	0.32	0.04	0.03	0.08	500	
YF2406IW	—	YF2406IT	24	0.34	0.48	0.31	0.04	0.03	0.08	500	
YF2408IW	—	YF2408IT	24	0.34	0.40	0.31	0.04	0.03	0.08	500	
YF2205IW	YF2205ID	YF2205IT	22	0.50	0.44	0.21	0.05	0.04	0.11	500	YF3206TOOL, YF2610TOOL, YF2214TOOL, YF2210TOOL, YF2210FL
YF2206IW	YF2206ID	YF2206IT	22	0.50	0.47	0.24	0.05	0.04	0.10	500	
YF2208IW	YF2208ID	YF2208IT	22	0.50	0.55	0.32	0.05	0.04	0.11	500	
YF2210IW	YF2210ID	YF2210IT	22	0.50	0.63	0.39	0.05	0.04	0.10	500	
YF2212IW	YF2212ID	YF2212IT	22	0.50	0.47	0.24	0.05	0.04	0.10	500	
YF2006IW	YF2206ID	YF2006IT	20	0.75	0.47	0.24	0.06	0.05	0.11	500	
YF2008IW	YF2008ID	YF2008IT	20	0.75	0.56	0.31	0.06	0.05	0.12	500	
YF2010IW	YF2010ID	YF2010IT	20	0.75	0.63	0.39	0.06	0.05	0.11	500	
YF2012IW	YF2012ID	YF2012IT	20	0.75	0.71	0.47	0.06	0.05	0.11	500	
YF2018IW	YF2018ID	YF2018IT	20	0.75	0.96	0.71	0.06	0.05	0.11	500	
YF1806IW	YF1806ID	YF1806IT	18	1.00	0.47	0.24	0.07	0.06	0.12	500	
YF1808IW	YF1808ID	YF1808IT	18	1.00	0.56	0.32	0.07	0.05	0.12	500	
YF1810IW	YF1810ID	YF1810IT	18	1.00	0.63	0.39	0.07	0.06	0.12	500	
YF1812IW	YF1812ID	YF1812IT	18	1.00	0.71	0.47	0.07	0.06	0.12	500	
YF1818IW	YF1818ID	YF1818IT	18	1.00	0.96	0.71	0.07	0.06	0.12	500	
YF1606IW	YF1606ID	YF1606IT	16	1.50	0.48	0.24	0.08	0.07	0.14	500	
YF1608IW	YF1608ID	YF1608IT	16	1.50	0.55	0.32	0.08	0.07	0.14	500	
YF1610IW	YF1610ID	YF1610IT	16	1.50	0.63	0.39	0.08	0.07	0.14	500	
YF1612IW	YF1612ID	YF1612IT	16	1.50	0.71	0.47	0.08	0.07	0.14	500	
YF1615IW	YF1615ID	YF1615IT	16	1.50	0.84	0.59	0.08	0.07	0.14	500	
YF1618IW	YF1618ID	YF1618IT	16	1.50	0.95	0.71	0.08	0.07	0.14	500	
YF1408IW	YF1408ID	YF1408IT	14	2.50	0.62	0.32	0.10	0.09	0.17	500	
YF1410IW	YF1410ID	YF1410IT	14	2.50	0.69	0.39	0.09	0.09	0.17	500	
YF1412IW	YF1412ID	YF1412IT	14	2.50	0.71	0.47	0.09	0.09	0.17	500	
YF1418IW	YF1418ID	YF1418IT	14	2.50	0.95	0.71	0.09	0.09	0.17	500	

Blue highlighted items are industry standard and most frequently ordered.

TYPE YF-I FERRULES
Series D, T & W
(Continued)

INSULATED FERRULES

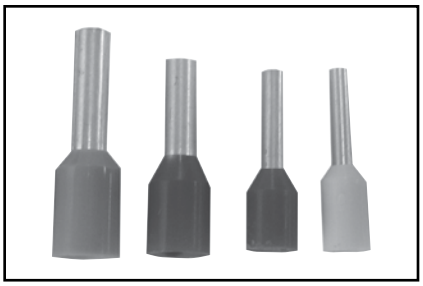

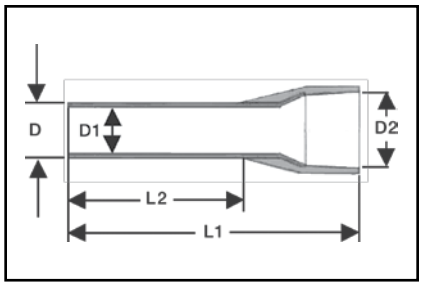

W Series	D Series	T Series	Wire Size		Dimensions in Inches					Bag Qty	Tooling
			AWG	mm²	L1 (in)	L2 (in)	D (in)	D1 (in)	D2 (in)		
YF1209IW	YF1209ID	YF1209IT	12	4.00	0.65	0.32	0.13	0.11	0.19	500	YF3206TOOL, YF2610TOOL, YF2210TOOL, YF2210FL
YF1210IW	YF1210ID	YF1210IT	12	4.00	0.71	0.39	0.13	0.11	0.13	500	
YF1212IW	YF1212ID	YF1212IT	12	4.00	0.79	0.47	0.13	0.11	0.19	500	
YF1218IW	YF1218ID	YF1218IT	12	4.00	1.02	0.71	0.13	0.11	0.19	500	
YF1010IW	YF1010ID	YF1010IT	10	6.00	0.73	0.39	0.15	0.14	0.25	100	YF3206TOOL, YF2610TOOL, YF2210TOOL, YF1006TOOL, YF2210FL
YF1012IW	YF1012ID	YF1012IT	10	6.00	0.82	0.47	0.15	0.14	0.23	100	
YF1018IW	YF1018ID	YF1018IT	10	6.00	1.02	0.71	0.15	0.15	0.25	100	
YF0812IW	YF0812ID	YF0812IT	8	10.00	0.91	0.46	0.19	0.18	0.31	100	YF3206TOOL, YF1006TOOL, YF0801TOOL
YF0815IW	YF0815ID	YF0815IT	8	10.00	0.93	0.59	0.19	0.18	0.29	100	
YF0818IW	YF0818ID	YF0818IT	8	10.00	1.10	0.71	0.19	0.18	0.29	100	
YF0612IW	YF0612ID	YF0612IT	6	16.00	0.89	0.43	0.25	0.23	0.34	100	
YF0618IW	YF0618ID	YF0618IT	6	16.00	0.89	0.43	0.25	0.23	0.34	100	
YF0412IW	YF0412ID	YF0412IT	4	25.00	0.94	0.47	0.31	0.29	0.44	100	YF0801TOOL, YF0401TOOL
YF0415IW	YF0415ID	YF0415IT	4	25.00	1.06	0.59	0.30	0.29	0.44	100	
YF0416IW	YF0416ID	YF0416IT	4	25.00	1.10	0.63	0.30	0.29	0.44	100	
YF0418IW	YF0418ID	YF0418IT	4	25.00	1.18	0.71	0.30	0.29	0.44	100	
YF0422IW	YF0422ID	YF0422IT	4	25.00	1.42	0.87	0.30	0.29	0.44	100	
YF0425IW	YF0425ID	YF0425IT	4	25.00	1.45	0.98	0.30	0.29	0.44	100	
YF0216IW	YF0216ID	YF0216IT	2	35.00	1.17	0.64	0.34	0.32	0.48	100	
YF0218IW	YF0218ID	YF0218IT	2	35.00	1.26	0.71	0.34	0.33	0.50	100	
YF0222IW	YF0222ID	YF0222IT	2	35.00	1.41	0.87	0.34	0.33	0.50	100	
YF0225IW	YF0225ID	YF0225IT	2	35.00	1.53	0.98	0.34	0.33	0.50	100	
YF0112IW	YF0112ID	YF0112IT	1	50.00	1.10	0.47	0.43	0.41	0.59	50	
YF0116IW	YF0116ID	YF0116IT	1	50.00	1.26	0.63	0.43	0.41	0.59	50	
YF0120IW	YF0120ID	YF0120IT	1	50.00	1.45	0.79	0.43	0.40	0.58	50	
YF0122IW	YF0122ID	YF0122IT	1	50.00	1.50	0.87	0.43	0.41	0.59	50	
YF0125IW	YF0125ID	YF0125IT	1	50.00	0.98	0.43	0.43	0.41	0.59	50	
YF0130IW	YF0130ID	YF0130IT	1	50.00	1.18	0.43	0.43	0.41	0.59	50	
—	YF2/020ID	—	2/0	70.00	1.45	0.79	0.56	0.53	0.63	25	YF1/03/0TOOL
—	YF2/025ID	—	2/0	70.00	1.65	0.98	0.56	0.53	0.63	25	
—	YF2/027ID	—	2/0	70.00	1.73	1.06	0.56	0.53	0.63	25	
—	YF3/025ID	—	3/0	95.00	1.73	0.98	0.61	0.58	0.73	25	
—	YF3/030ID	—	3/0	95.00	1.95	1.18	0.61	0.58	0.73	25	
—	YF4/027ID	—	4/0	120.00	1.87	1.06	0.70	0.66	0.80	25	YF4/0250TOOL
—	YF4/030ID	—	4/0	120.00	2.01	1.18	0.70	0.66	0.80	25	
—	YF4/032ID	—	4/0	120.00	2.07	1.26	0.70	0.66	0.80	25	
—	YF4/034ID	—	4/0	120.00	2.15	1.34	0.70	0.66	0.80	25	
—	YF25025ID	—	250	150.00	1.99	0.98	0.81	0.77	0.92	25	
—	YF25027ID	—	250	150.00	2.07	1.06	0.81	0.77	0.92	25	
—	YF25032ID	—	250	150.00	2.27	1.26	0.81	0.77	0.92	25	
—	YF25038ID	—	250	150.00	2.50	1.50	0.81	0.77	0.92	25	

Blue highlighted items are industry standard and most frequently ordered.

TYPE YF-TW

INSULATED TWIN FERRULES

For Use on Copper Conductor

Ferrules are electrical connectors used to terminate stranded wires, creating a quality, reliable connection by ensuring each wire strand conducts current when properly crimped. Especially useful when multiple reconnections could be necessary within terminal blocks or other similar devices. No breakage of wire strands when wire is bent, under stress or in a vibration environment. Twin ferrule designs allow two individual stranded conductors to be connected to the same termination, most beneficial in jumpering or other similiar applications. Both styles (single and twin) offer the same features and benefits. The YF-TOOL series has been designed to crimp both the bare (type YF) and insulated (type YF-I) ferrules.

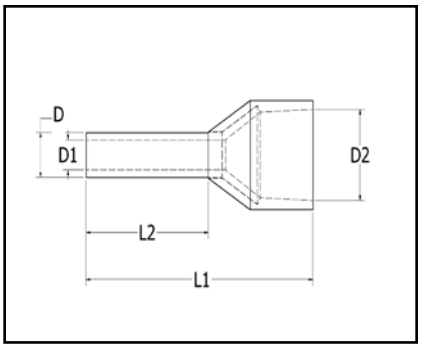

Features & Benefits

- Made of electrolytic copper, tin plated
- Smooth funnel entry to make wire insertion easier
- Secure contacting even after multiple reconnections
- Long-term contact resistance
- No fraying of strands
- No breakage of wire strands when wire is bent, under stress or in vibration environment
- RoHS compliant

Catalog Number			Wire sizes		Dimensions in Inches					Tooling	Bag Qty
W Series	T Series	D Series	AWG	mm²	L1 Dim (in)	L2 Dim (in)	D Dim (in)	D1 Dim (in)	D2 Dim (in)		
YFTW2208W	YFTW2208T	YFTW2208D	22 AWG	0.50	0.60	0.30	0.07	0.06	0.19	YF32016TOOL YF2210TOOL YF2210FL	100
YFTW2010W	YFTW2010T	YFTW2010D	20 AWG	0.75	0.66	0.39	0.08	0.07	0.22		
YFTW2008W	YFTW2008T	YFTW2008D	20 AWG	0.75	0.60	0.31	0.08	0.07	0.20		
YFTW1810W	YFTW1810T	YFTW1810D	18 AWG	1.00	0.67	0.39	0.09	0.08	0.22		
YFTW1808W	YFTW1808T	YFTW1808D	18 AWG	1.00	0.62	0.31	0.09	0.08	0.22		
YFTW1612W	YFTW1612T	YFTW1612D	16 AWG	1.50	0.77	0.47	0.10	0.09	0.25		
YFTW1608W	YFTW1608T	YFTW1608D	16 AWG	1.50	0.65	0.31	0.10	0.09	0.26		
YFTW1413W	YFTW1413T	YFTW1413D	14 AWG	2.50	0.85	0.51	0.13	0.11	0.32		
YFTW1410W	YFTW1410T	YFTW1410D	14 AWG	2.50	0.77	0.39	0.13	0.11	0.31		
YFTW1212W	YFTW1212T	YFTW1212D	12 AWG	4.00	0.92	0.46	0.17	0.15	0.36		500
YFTW1014W	YFTW1014T	YFTW1014D	10 AWG	6.00	0.99	0.53	0.21	0.19	0.41		
YFTW0814W	YFTW0814T	YFTW0814D	8 AWG	10.00	1.04	0.55	0.27	0.25	0.51	YF0801TOOL YF1006TOOL	
YFTW0614W	YFTW0614T	YFTW0614D	6 AWG	16.00	1.23	0.55	0.34	0.33	0.75		

Blue highlighted items are industry standard and most frequently ordered.

SMALL TERMINAL KITS

PACKAGED KITS OF VARIOUS TYPES OF SMALL TERMINALS

For Use On Copper Conductor

Small Terminal Kits are packaged in reusable plastic cases with secure compartments for each type of connector. Clearly marked on the inside front cover with part numbers and descriptions, the kits contain some of the most common terminals needed on everyday installations.

Features & Benefits

- Quality terminals of various types packaged together for convenience
- Color-coded barrels
- Reusable, refi llable container
- Clearly marked with part numbers and descriptions on inside cover

Catalog Number: STKIT08
Contains:

Kit	Catalog Number	Quantity	Description
STKIT08	SP14	20	#16 - #14 AWG splice; vinyl insulation
	QP14M25X03D	10	#16 - #14 AWG male disconnect; .250 tab size; vinyl insulation
	QP14F25X03D	10	#16 - #14 AWG female disconnect; .250 tab size; vinyl insulation
	TP14-10	20	#16 - #14 AWG ring terminal; 8 - 10 stud size; vinyl insulation
	TP14-10F	20	#16 - #14 AWG fork terminal; 8 - 10 stud size; vinyl insulation
	SP10	10	#12 - #10 AWG splice; vinyl insulation
	TP10-10	20	#12 - #10 AWG ring terminal; 8 - 10 stud size; vinyl insulation
	TP10-10F	20	#12 - #10 AWG fork terminal; 8 - 10 stud size; vinyl insulation

Catalog Number: STKIT15
Contains:

Kit	Catalog Number	Quantity	Description
STKIT15	QP18M18X02D	20	#22 - #18 AWG male disconnect; .187 tab; vinyl insulation
	QP18M25X03D	20	#22 - #18 AWG male disconnect; .250 tab; vinyl insulation
	QP18F18X02D	20	#22 - #18 AWG female disconnect; .187 tab; vinyl insulation
	QP18F25X03D	20	#22 - #18 AWG female disconnect; .250 tab; vinyl insulation
	BULM18P	20	#22 - #18 AWG male bullet disconnect; vinyl insulation
	BULF18P	20	#22 - #18 AWG female bullet disconnect; vinyl insulation
	SP18	20	#22 - #18 AWG splice; vinyl insulation
	QP14M18X02D	20	#16 - #14 AWG male disconnect; .187 tab; vinyl insulation
	QP14M25X03D	20	#16 - #14 AWG male disconnect; .250 tab; vinyl insulation
	QP14F18X02D	20	#16 - #14 AWG female disconnect; .187 tab; vinyl insulation
	QP14F25X03D	20	#16 - #14 AWG female disconnect; .250 tab; vinyl insulation
	BULM14P	20	#16 - #14 AWG male bullet disconnect; vinyl insulation
	BULF14P	20	#16 - #14 AWG female bullet disconnect; vinyl insulation
	SP14	20	#16 - #14 AWG splice; vinyl insulation
	SP10	20	#12 - #10 AWG splice; vinyl insulation

Blue highlighted items are industry standard and most frequently ordered.

TYPE HSKIT

HYDENT™ HEAT SHRINK CONNECTORS AND INSTALLATION TOOL

For Use On Copper Conductor

Standard crimp terminals leave the wire exposed allowing in moisture or other contaminants which can result in corrosion. Heat shrink terminals provide a durable seal, blocking out contaminants, ensuring a better connection.

Features & Benefits

- Made from pure copper, annealed for maximum strength
- Color-coded, imprinted with wire size
- Serrated barrels offer maximum wire contact and tensile strength
- Electro tin plated for corrosion resistance
- Wire strip length 5/16"

List of Items Included in HSKIT

Quantity of Pieces included in kit	Description	Conductor Size	Stud Size	Quantity of Pieces included in kit	Description	Conductor Size	Stud Size
50	Butt Splice	22 - 18 AWG	—	10	Fork Terminal	22 - 18 AWG	#6
50	Butt Splice	16 - 14 AWG	—	10	Fork Terminal	22 - 18 AWG	#8
30	Butt Splice	12 - 10 AWG	—	10	Fork Terminal	22 - 18 AWG	#10
15	Butt Splice	#8 AWG	—	10	Fork Terminal	16 - 14 AWG	#6
10	Ring Terminal	22 - 18 AWG	#6	10	Fork Terminal	16 - 14 AWG	#8
10	Ring Terminal	22 - 18 AWG	#8	10	Fork Terminal	16 - 14 AWG	#10
10	Ring Terminal	22 - 18 AWG	#10	10	Fork Terminal	12 - 10 AWG	#6
10	Ring Terminal	22 - 18 AWG	5/16"	10	Fork Terminal	12 - 10 AWG	#8
10	Ring Terminal	22 - 18 AWG	1/4"	10	Fork Terminal	12 - 10 AWG	#10
10	Ring Terminal	22 - 18 AWG	3/8"	15	Fork Terminal	#8 AWG	3/8"
10	Ring Terminal	16 - 14 AWG	#8	50 (25 ea)	Male & Female Quick Disc.	22 - 18 AWG	—
10	Ring Terminal	16 - 14 AWG	#10	50 (25 ea)	Male & Female Quick Disc.	16 - 14 AWG	—
10	Ring Terminal	16 - 14 AWG	5/16"	50 (25 ea)	Male & Female Quick Disc.	12 - 10 AWG	—
10	Ring Terminal	16 - 14 AWG	1/4"	30 (15 ea)	Male & Female Bullet	16 - 14 AWG	—
10	Ring Terminal	16 - 14 AWG	3/8"	20 (10 ea)	Male & Female Ins. Quick Disc.	22 - 18 AWG	—
10	Ring Terminal	16 - 14 AWG	#6	20 (10 ea)	Male & Female Ins. Quick Disc.	16 - 14 AWG	—
10	Ring Terminal	12 - 10 AWG	#8	20 (10 ea)	Male & Female Ins. Quick Disc.	12 - 10 AWG	—
10	Ring Terminal	12 - 10 AWG	#10	10	Step Down Butt Splice	16 - 14 to 22 - 18 AWG	—
10	Ring Terminal	12 - 10 AWG	5/16"	10	Step Down Butt Splice	12 - 10 to 16 - 14 AWG	—
10	Ring Terminal	12 - 10 AWG	1/4"	1	Ratchet Crimp Tool	—	—
10	Ring Terminal	12 - 10 AWG	3/8"	1	Metal Case with Dividers	—	—
15	Ring Terminal	#8 AWG	#10				

Blue highlighted items are industry standard and most frequently ordered.

BURCAP TYPES YQE, RK

PIGTAIL SPLICE, NYLON-INSULATED

Rated at 600 volts for building wire and 1000 volts for fixtures and signs,the BURCAP is designed to splice a wide range of different cable sizes.

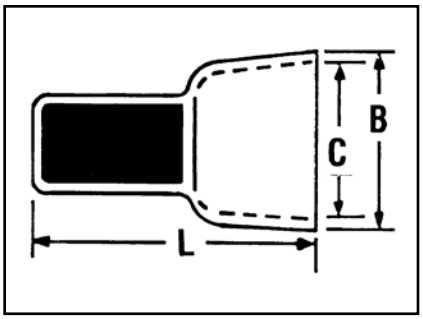

Catalog Number	Wire Combinations								Total Area Circular Mils	Dimension in Inches			Installation Tools	Wire Strip Length
										L	B	C	M8ND, Y8ND, HYTOOL™	
YQE-91†	1 # 16 & 1 # 18,								4205	0.76	0.30	0.24	N150WT	5/16"
	2# 18								3250					
*RK141-2	RK141ABOX100				RK142ABOX100				500 - 5,180	0.61 (16, 4)	0.31 (7, 9)	0.27 (8, 6)		
	22	20	18	16	18	16	14	12						
*RK142-2	7					1		1	2,400 - 13,100	0.72 (18, 3)	0.44 (11, 2)	0.38 (9, 8)		
	6	1				2		1						
	5		1			3		1						
	4	2			1			1						
	4		1		2			1						
	3	2			3			1						
	3		2			1	1							
	3			1		2	1							
	2	3			1		1							
	2		2		2		1							
	2			1	3		1							
	1	4			2	2	1							
	1		2				2							
	1			1	1	1								
		4			2	1								
		3	1		3	1								
		2	2		4	1								
		2		1	1	2								
		1	2		2	2								
		1		1	3	2								
			3			2								
			2		1	3								
						3								
					5									

NOTE:

* Convenience Package. For Box quantity, order RK141ABOX100 and RK142ABOX100 respectively.

† This item is UL Listed

Blue highlighted items are industry standard and most frequently ordered.

TABLE OF CONTENTS

Compression Connectors
- Selection & Use C-4
- Tooling C-4
- Industry Standards C-4

Telecommunications Connectors
- Circumferential Crimps C-5
- Tooling C-5
- Industry Standards C-5

Y644 Family Expanded Ranges C-6

Y81KFT Family Expanded Ranges C-7, C-8

12 Ton U-Dies C-9

W Dies C-9

Index Chart C-10

Battery Terminals
- Straight Style C-11
- T-Style C-12
- Grounding/Starter C-13

Break-Away HYLUG™ Connectors
- Copper C-14, C-15
- Aluminum C-16
- Cu/Al Wind Turbine Kits C-17

Blank Tongue Connectors C-18 to C-20

One Hole HYLUG™ for Code Conductor
- Standard Barrel C-21 to C-24
- Standard Barrel - Narrow Tongue C-25, C-26
- Long Barrel C-27 to C-30
- Long Barrel - with Inspection Window C-31 to C-33

Two Hole HYLUG™ for Code Conductor
- Standard Barrel C-34 to C-37
- Standard Barrel - Narrow Tongue C-38, C-39
- Long Barrel C-40 to C-42
- Long Barrel - with Inspection Window C-43 to C-46

Four Hole HYLUG™ for Code Conductor
- Long Barrel C-47

One Hole HYLUG™ for Flex Conductor
- Standard Barrel C-48 to C-50
- Standard Barrel - Narrow Tongue C-51, C-52
- Standard Barrel - No Inspection Window C-53, C-54
- Standard Barrel - Belled End C-55
- Long Barrel - with Inspection Window C-56, C-57
- Long Barrel - Belled End C-58, C-59

Two Hole HYLUG™ for Flex Conductor
- Standard Barrel C-60 to C-62
- Standard Barrel - Narrow Tongue C-63, C-64
- Long Barrel - with Inspection Window C-65 to C-67
- Long Barrel - Belled End C-68 to C-70
- Long Barrel - Narrow Tongue C-71, C-72

Lead Plated for Flex Conductor
- One Hole Standard Barrel C-73 to C-75
- Two Hole Standard Barrel C-76 to C-78

Specialty Design
- Two Hole - Double Barrel for Flex C-79
- Two Hole - Slotted Tongue, Standard Barrel for Code/Flex C-80
- Two Hole - Slotted Tongue, Long Barrel for Code C-81
- Two Hole - Slotted Tongue, Long Barrel with Inspection Window for Code C-82
- Two Hole - Slotted Tongue, Long Barrel with Inspection Window for Flex C-83, C-84
- Split Tongue Design - Standard Barrel for Code/Flex C-85
- Split Tongue Design - Long Barrel with Inspection Window for Code/Flex C-86

TABLE OF CONTENTS
(Continued)

Metric Connectors
- One Hole Standard Barrel for Code — C-87 to C-89
- One Hole Long Barrel for Code — C-90 to C-92
- Two Hole Standard Barrel for Code — C-93 to C-95
- Two Hole Long Barrel for Code — C-96 to C-98
- One Hole Standard Barrel for Flex — C-99, C-100
- One Hole Long Barrel for Flex — C-101, C-102
- Two Hole Standard Barrel for Flex — C-103, C-104
- Two Hole Long Barrel for Flex — C-105, C-106

E-LINE HYLUG™ Connectors
- One and Two Hole - Narrow Tongue for Copper/Aluminum — C-107, C-108

HYLINK™ Splices
- Color-Coded Parallel — C-109
- Standard Barrel for Copper — C-110
- Long Barrel for Copper — C-111
- Reducing Adaptors for Copper — C-112
- Standard Barrel - Belled Ends for Flex — C-113 to C-115
- Standard Barrel - Tapered Ends for Code — C-116
- Long Barrel - Belled Ends for Flex — C-117

HYSPLICE™ In-Line Splice Kits
- Standard Barrel with Inspection Window for Code/Flex — C-118

HYREDUCER™ In-Line Reducer Splice Kits
- Reducing Splices for Code/Flex — C-119 to C-128

Copper Taps
- C-Tap - Thin Wall — C-129
- CRIMPIT™ C-Tap - Unplated — C-130
- CRIMPIT™ C-Tap - Tin-plated — C-131
- CRIMPIT™ H-Tap — C-132 to C-134
- H-Tap Covers - Black and Clear — C-135
- Split H-Tap CRIMPIT™ — C-136

T Connectors
- HYTEE™ Coupler — C-137
- Bolted Run/Compression Tap — C-139

HYPLUG™
- Copper Adaptors — C-139 to C-141

HYSTACK™
- Stacking Adaptors for Copper/Aluminum — C-142

Aluminum Connectors
- One Hole for Aluminum/Copper — C-143, C-144
- Two Hole/Four Hole for Aluminum/Copper — C-145, C-146

Transformer Lug Kit
- For Aluminum/ Copper — C-147

HYPLUG™ Adaptors
- Adaptors for Aluminum/Copper — C-148, C-149

HYLINK™ Splices
- Splices for Aluminum/Copper — C-150, C-151
- Tapered End Splices for Aluminum/Copper — C-152

HYREDUCER™ Splice
- Reducing Splices for Aluminum/Copper — C-153

H CRIMPIT™ Connectors
- Tap Connectors for Aluminum/Copper — C-154
- Insulating/Flame Retardant Covers — C-155

COPPER	STRANDED CODE CLASS B CABLE	STD. LENGTH LUGS	ONE HOLE	YA-L, YA-L-TC	C-21 to C-24
			NARROW TONGUE	YA-L-NT	C-25, C-26
			NARROW TONGUE TWO HOLE	YA-L-2NT	C-38, C-39
			TWO HOLE	YA-2L, YA-2LN, YA-L-2TC	C-34 to C-37
		LONG BARREL LUGS	ONE HOLE	YA, YA-TC, YAZ	C-27 to C-33
			TWO HOLE	YA-2N, YA-2TC, YAZ	C-40 to C-46
			FOUR HOLE	YA-4N, YAB-4N	C-47
		COPPER SPLICES	STANDARD LENGTH	YS-L	C-110
			LONG BARREL	YS, YS-T, YSP-T	C-111, C-116
		REDUCER ADAPTER	REDUCER ADAPTER	Y-R	C-112
		COPPER TAPS	TEE	YST, NYT	C-137, C-138
			C-TAP	YC-C	C-130
			LIGHT DUTY C TAP	YC-L	C-129
		METRIC LUGS	ONE HOLE - STANDARD / LONG	YAVM, YALBM	C-82 to C-92
			TWO HOLE - STANDARD / LONG	YAV2M, YALB2M	C-93 to C-98
	FLEXIBLE EXTRA FLEX *Accepts code and Flex Cables Up to 4/0*	STD. LENGTH BARREL LUGS	ONE HOLE	YA-L-FX, YAV, YAV-L-FX, YAG-L-FX	C-48 to C-54
			ONE HOLE-WIDE BELLED ENTRY	YA-LB	C-55
			ONE HOLE-LEAD PLATED	YAG-L-TC-LD	C-73 to C-75
			TWO HOLE	YA-L-2TC-FX, YAV-L-2TC-FX	C-60 to C-64
			TWO HOLE-LEAD PLATED	YAG-L-2TC-LD	C-77, C-78
		LONG BARREL LUG	ONE HOLE	YA-TC-FXB, YAV-TC-FXB, YAZV	C-57 to C-59
			TWO HOLE	YA-2TC-FXB, YAV-2TC-FXB, YAZV	C-65 to C-72
		PIN ADAPTER	PIN ADAPTER	YEV-P-FX, YEP-FX, YEP	C-139 to C-141
		SPLICE	STANDARD BARREL - BELLED	YS-LB	C-113
			LONG BARREL - BELLED	YS-FXB	C-117
		COPPER TAPS	C-TAP	YC-L, YC-C, YCHC	C-129 to C-131
			H-TAP	YH	C-132 to C-134
			LONG H TAP	YSH	C-136
			COVERS FOR H TAPS	CF-FR, CCF-FR	C-135
		METRIC LUGS	ONE HOLE - STANDARD / LONG	YAVFM, YALBFM	C-99 to C-102
			TWO HOLE - STANDARD / LONG	YAV2FM, YALB2FM	C-103 to C-106
	RANGE TAKING	E-LINE	ONE HOLE	YA-E	C-107
			TWO HOLE	YA-2-E	C-107
	SPECIALS	SPLIT TONGUE	STANDARD BARREL		C-85
			LONG BARREL		C-86
		YSR		YSR-TCKITC	C-119 to C-122
		SLOTTED TERMINALS	STANDARD BARREL	YA-L-2TC-SL	C-80
			LONG BARREL	YA-2TC-SL, YAZV-2TC-SLFX	C-81 to C-84
ALUMINUM		LUGS	ONE HOLE	YA-A, YA-A-TN	C-143, C-144
			TWO HOLE	YA-A	C-145, C-146
		TRANSFORM. LUG KIT		YA-A-KIT	C-147
		STACKING ADAPTER		ASA-U, CUSA	C-142
		PIN ADAPTER	STRAIGHT	AYP	C-148, C-149
			OFFSET	AYPO	C-148, C-149
		SPLICES	STANDARD	YS-A	C-150, C-151
			TAPERED FOR HIGH VOLTAGE	YS-AT	C-152
		REDUCERS		YRB	C-153
		TAPS	H-TAPS	YFD, YFN, YFO, YFR	C-154
			COVERS FOR H TAPS	CFA, CFA-FR	C-155
		E-LINE	ONE HOLE	YA-E	C-107, C-108
			TWO HOLE	YA-E	C-107, C-108

COMPRESSION CONNECTORS

BURNDY® compression connectors are designed for reliable and controllable electrical connections. The complete installation is fully inspectable. They are high conductivity copper and operate cooler than the wire on which they are installed. The connectors withstand a wide range of electrical and environmental conditions, including current surges, temperatures, corrosion and vibrations, for a wide variety of applications. These features mean a consistently high quality connection at a low installed cost.

Copper compression connectors are manufactured from high-conductivity electrolytic copper. The connectors are normally tin-plated, lead-plated, or plated with proprietary BURNDY® brite finish to provide durable long-lasting corrosion resistance. The connector design has been matched to the cable size to provide the necessary physical strength requirements for reliable electrical performance.

Aluminum compression connectors are manufactured from high conductivity, high purity wrought aluminum. They are designed with sufficient mass and are electro-tin plated to minimize corrosion due to galvanic action between dissimilar metals. The connector barrels are pre-filled with PENETROX™, BURNDY oxide inhibiting compound.

PENETROX™ contains homogeneously suspended metallic particles which penetrate the wire's oxides to establish excellent continuity between the individual strands and the connector barrel for a low-resistance connection. PENETROX™ maintains an air-tight connection. Each barrel end is covered with a color-coded plastic dust cap which prevents foreign matter from entering the connector before it is used. The connector design has been engineered to match the cable size to provide the necessary physical strength requirements for reliable electrical performance.

SELECTION AND USE

Copper compression connectors are recommended for use on copper conductors. Aluminum compression connectors are recommended for use on aluminum conductors. Dual-rated aluminum compression connectors may be used on both copper and aluminum conductors.

Two basic compression designs are available: Circumferential and indent.

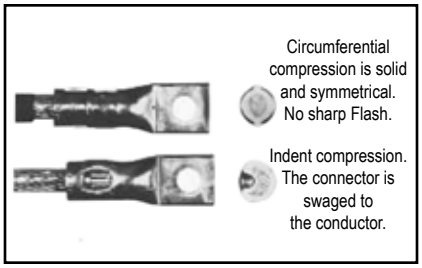

After compression, virtually all the air is removed leaving a tight homogeneous mass of connector and conductor.

The circumferential crimp design is recommended for color coded connectors in low and high voltage applications. Die index number embossment provides an easy inspection where required to verify the use of the proper connector/die combination. It is also recommended for insulated connectors and for terminating flexible and welding cables.

The circumferential crimp design dies compress cable strands into polygonal shapes forming intimate contact with each other and the connector barrel. This compression forms a tight homogeneous mass with virtually no air pockets. The circumferential crimp provides an excellent electrical connection with high pull-out values. The circumferential crimp is ideal for high voltage applications leaving the connector barrel symmetrical, which is easier to insulate.

The indent type crimp can be used in virtually any application except polyvinylchloride (PVC) insulated terminals and splices. It is an excellent means of terminating flexible, extra flexible and welding cables. The indentor compresses the cable strands to form intimate contact with each other and the connector barrel. The result is an excellent electrical connection with high pull-out strength. Laboratory work testing curves established the proper depth and shape of indent for each type of connector and wire combination.

TOOLING

Tooling systems are essential for proper installation of a compression connector. Since connectors and dies are designed as a unit for specific wire sizes, only the recommended tools and dies should be used. Most aluminum and copper HYLUG™ terminals and HYLINK™ splices are marked with a die index number and are color-coded to identify the correct installation die. Dies marked with the matching die index number and color can be used to install the connector.

BURNDY® tooling installs a wide range of connectors, is reliable, cost effective, and precision engineered for durable, long-lasting service and quality connections. The tools include small plier types, full cycle ratchet designs and hydraulically-powered HYPRESS™ heads and new Battery Actuated Tools. Some have permanent die grooves or adjustable dies, while others require a change of die sets or nest die for each connector size. BURNDY recommended tools achieve crimp performance consistent with UL and other industry standards. Since several tools are suitable for most connectors, the most economical and practical tool can be chosen for each application.

INDUSTRY STANDARDS

BURNDY compression terminals, splices and tap connectors requiring third party testing and approval are listed by Underwriters' Laboratories, Inc. Many have also received CSA approval and are approved under SAE-AS7928 and other military standards. All conform to applicable sections of the National Electrical Code.

BURNDY® also offers connectors and splices which meet the (LOCA Seismec and Aging) requirements of IEEE standards 323, 383 and 344 for class 1E critical circuits for use in Nuclear Utility Applications. Certification to 10CFR50 and 10CFR21 available.

Detail catalog listings should be consulted to obtain the appropriate standards for each connector and splice.

BURNDY® Telecommunications Connectors…

The industry's first choice in compression connections...

BURNDY® provides a complete selection of one and two hole compression's terminals, H-taps, C-taps, and other compression connection products specifically engineered to meet the demanding applications of both the Central Office and Wireless communications markets.

All of the BURNDY compression products are designed for reliable and controllable electrical connections. All connectors are made from high conductivity electrolytic copper and operate at cooler temperatures than the conductor on which they are installed. The connectors are normally tin-plated, lead-plated, or plated with a proprietary BURNDY® brite finish to provide the industry standard in long-lasting corrosion resistance.

The complete installation is fully inspectable and UL Listed when installed with BURNDY® dies. Every die in the system is color-coded and provides die index embossment for complete inspectability.

The Circumferential Crimp…

Circumferential compression is solid and symmetrical. No sharp flash.

The BURNDY® circumferential crimp provides a solid, homogenous connection, with high pull out values and is rated for high voltage applications, more than sufficient for the 48V DC operating voltage common in the telecom market. In addition the circumferential crimp doesn't require the removal of the copper flash produced by other die systems. This not only saves time in installation but removes a potential safety hazard from the job.

All of the dies in the system are color-coded to match the connectors and feature die index and die number matching to the connector for ease of installation.

BURNDY® Tooling… the right choice for the job

BURNDY® tooling installs a wide range of connectors, is reliable, cost effective, and precision engineered for durable, long-lasting service and quality connections. BURNDY compression tooling system ranges from full cycle ratchet hand tools to 12 and 15 ton hydraulically-powered HYPRESS™ heads. Hydraulic tools are available in self-contained, battery powered, and AC service electrically powered pump and remote head designs to meet all possible installation situations.

Industry Standards

BURNDY compression terminals, splices and tap connectors requiring third party testing and approval are listed by Under writers Laboratories, Inc. Many have also received CSA approval, and all conform to the applicable sections of the National Electric Code.

EXPANDED RANGES

The following connectors are range taking when crimped onto code conductor using Y644HS family of tools:

COPPER

Copper HYLUG™ & HYLINK™ Connectors Types YA, YA-L, YAB, YS, YS-L, YST, YS-T, YSP-T			
Catalog No.		Standard Wire Size	Expanded Wire Range
Terminal*	Splice**		
YA6C-	YS6C-	#6 AWG	#6 AWG
YA5C-	YS5C-	#5 AWG	#5 - #6 AWG
YA4C-	YS4C-	#4 AWG	#4 - #6 AWG
YA3C-	YS3C-	#3 AWG	#3 - #6 AWG
YA2C-	YS2C-	#2 AWG	#2 - #6 AWG
YA1C-	YS1C-	#1 AWG	#1 - #6 AWG
YA25-	YS25-	1/0 AWG	1/0 - #6 AWG
YA26-	YS26-	2/0 AWG	2/0 - #4 AWG
YA27-	YS27-	3/0 AWG	3/0 - #2 AWG
YA28-	YS28-	4/0 AWG	4/0 - #1 AWG
YA29-	YS29-	250 kcmil	250 kcmil - 1/0 AWG
YA30-	YS30-	300 kcmil	300 kcmil - 2/0 AWG
YA31-	YS31-	350 kcmil	350 kcmil - 3/0 AWG
YA32-	YS32-	400 kcmil	400 kcmil - 4/0 AWG
YA34-	YS34-	500 kcmil	500 kcmil - 4/0 AWG
YA36-	YS36-	600 kcmil	600 - 250 kcmil
YA39-	YS39-	750 kcmil	750 - 500 kcmil
YA40-	YS40-	800 kcmil	800 - 500 kcmil
YA44-	YS44-	1000 kcmil	1000 - 750 kcmil

* 1 Crimp
** 1 Crimp per side

ALUMINUM

Aluminum HYLUG™ & HYLINK™ Connectors Types YA-A & YS-A (Copper or Aluminum Conductor)			
Catalog No.		Standard Wire Size	Expanded Wire Range
Terminal*	Splice**		
YA6CA-	YS6CA-	#6 AWG	#6 AWG
YA4CA-	YS4CA-	#4 AWG	#4 - #6 AWG
YA2CA-	YS2CA-	#2 AWG	#2 - #6 AWG
YA1CA-	YS1CA-	#1 AWG	#1 - #2 AWG
YA25A-	YS25A-	1/0 AWG	1/0 - #1 AWG
YA26A-	YS26A-	2/0 AWG	2/0 - #1 AWG
YA27A-	YS27A-	3/0 AWG	3/0 - #1 AWG
YA28A-	YS28A-	4/0 AWG	4/0 - #1 AWG
YA29A-	YS29A-	250 kcmil	250 kcmil - 1/0 AWG
YA30A-	YS30A-	300 kcmil	300 kcmil - 2/0 AWG
YA31A-	YS31A-	350 kcmil	350 kcmil - 3/0 AWG
YA32A-	YS32A-	400 kcmil	400 kcmil - 4/0 AWG
YA34A-	YS34A-	500 kcmil	500 kcmil - 4/0 AWG
YA36A-	YS36A-	600 kcmil	600 - 250 kcmil
YA39A-	YS39A-	750 kcmil	750 - 500 kcmil
YA40A-	YS40A-	800 kcmil	800 - 500 kcmil
YA42A- †	YS42A- ‡	900 kcmil ▲	900 - 600 kcmil
YA44A-	YS44A-	1000 kcmil	1000 - 750 kcmil

* 1 Crimp
** 1 Crimp per side
▲ 900 AL only
† 2 Crimps
‡ 2 Crimps per side

AYP/AYPO CONNECTORS

(Aluminum and Copper — Code & Compact)				
		Pin		
Wire Size	Expanded Range	Straight	Offset	# Crimps
#6 AWG	#6 AWG	AYP6	—	1
#4 AWG	#4 AWG	AYP4	—	1
#2 AWG	#4 - #2 AWG	AYP2	—	1
#1 AWG	#2 - #1 AWG	AYP1	—	1
1/0 AWG	#2 - 1/0 AWG	AYP1/0	—	1
2/0 AWG	#1 - 2/0 AWG	AYP2/0	AYPO2/0	2
3/0 AWG	1/0 - 3/0 AWG	AYP3/0	AYP03/0	2
4/0 AWG	2/0 - 4/0 AWG	AYP4/0	AYPO4/0	2
250 kcmil	3/0 - 250 kcmil	AYP250	AYP0250	2
300 kcmil	4/0 - 300 kcmil	AYP300	AYP0300	2
350 kcmil	250 - 350 kcmil	AYP350	AYP0350	2
400 kcmil	350 - 500 kcmil	AYP400	AYP0400	2
500 kcmil	350 - 500 kcmil	AYP500	AYPO500	2
600 kcmil	400 - 600 kcmil	AYP600	AYPO600	3
750 kcmil	500 - 750 kcmil	AYP750	AYP0750	3

EXPANDED RANGES

The following connectors are range taking when crimped onto code & flex conductor using 4-POINT® family of tools:

ALUMINUM CONNECTORS

Aluminum & Copper Conductor (Code & Compact)				
Conductor		Connector		
Wire Size	Expanded Range	Terminal	Splice	# Crimps
#8 AWG	#8 AWG	YA8CA-	YS8CA-	1
#6 AWG	#6 AWG	YA6CA-	YS6CA-	1
#4 AWG	#6 - #4 AWG	YA4CA-	YS4CA-	1
#2 AWG	#6-#2 AWG	YA2CA-	YS2CA-	2
#1 AWG	#6-#1 AWG	YA1CA-	YS1CA-	2
1/0 AWG	#6-1/0 AWG	YA25A-	YS25A-	2
2/0 AWG	#4 - 2/0 AWG	YA26A-	YS26A-	2
3/0 AWG	#2 - 3/0 AWG	YA27A-	YS27A-	2
4/0 AWG	#1 - 4/0 AWG	YA28A-	YS28A-	2
250 kcmil	1/0 - 250	YA29A-	YS29A-	2
300 kcmil	2/0 - 300	YA30A-	YS30A-	2
350 kcmil	3/0 - 350	YA31A-	YS31A-	3
400 kcmil	4/0 - 400	YA32A-	YS32A-	4
500 kcmil	4/0 - 500	YA34A-	YS34A-	4
600 kcmil	250 - 600	YA36A-	YS36A-	4
750 kcmil	500-750	YA39A-	YS39A-	4

COPPER CONNECTORS

Copper Conductor (Code & Compact)							
Conductor		Standard Barrel			Long Barrell		
Wire Size	Expanded Range	Terminal	Splice	# of Crimps*	Terminal	Splice	# of Crimps*
#8 AWG	#8 AWG	YA8CL-	YS8CL-	1	YA8C-	YS8C-	1
#6 AWG	#6 AWG	YA6CL-	YS6CL-	1	YA6C-	YS6C-	1
#4 AWG	#6 - #4	YA4CL-	YS4CL-	1	YA4C-	YS4C-	1
#2 AWG	#6-#2	YA2CL-	YS2CL-	1	YA2C-	YS2C-	2
#1 AWG	#6-#1	YA1CL-	YS1CL-	1	YA1C-	YS1C-	2
1/0 AWG	#6-1/0	YA25L-	YS25L-	1	YA25-	YS25-	2
2/0 AWG	#4 - 2/0	YA26L-	YS26L-	1	YA26-	YS26-	2
3/0 AWG	#2 - 3/0	YA27L-	YS27L-	2	YA27-	YS27-	2
4/0 AWG	#1 - 4/0	YA28L-	YS28L-	2	YA28-	YS28-	2
250 kcmil	1/0 - 250	YA29L-	YS29L-	2	YA29-	YS29-	2
300 kcmil	2/0 - 300	YA30L-	YS30L-	2	YA30-	YS30-	3
350 kcmil	3/0 - 350	YA31L-	YS31L-	2	YA31-	YS31-	3
400 kcmil	4/0 - 400	YA32L-	YS32L-	2	YA32-	YS32-	3
500 kcmil	4/0 - 500	YA34L-	YS34L-	2	YA34-	YS34-	4
600 kcmil	250 - 600	YA36L-	YS36L-	2	YA36-	YS36-	4
700 kcmil	350-700	YA38L-	YS38L-	3	YA38-	YS38-	4
750 kcmil	500-750	YA39L-	YS39L-	3	YA39-	YS39-	4
800 kcmil	500-800	YA40L-	YS40L-	3	YA40-	YS40-	4
1000 kcmil	750-1000	YA44L-	YS44L-	3	YA44-	YS44-	4

*Same number of recommended crimps for both Standard and Expanded wire ranges

EXPANDED RANGES

The following connectors are range taking when crimped onto code & flex conductor using 4-POINT® family of tools:

COPPER CONNECTORS

Copper Conductor (Flex Only)								
Nominal Flex Wire Size	Standard Barrel				Long Barrell			
	Expanded Range	Terminal	Splice	# of Crimps*	Expanded Range	Terminal	Splice	# of Crimps*
#8 AWG	#8 AWG	YAV8CL-	YSV8CL-	1	#8 AWG	YAV8C-	YSV8C-	1
#6 AWG	#6 AWG	YAV6CL-	YSV6CL-	1	#6 AWG	YAV6C-	YSV6C-	1
#4 AWG	#6 - #4 AWG	YAV4CL-	YSV4CL-	1	#6 - #4 AWG	YAV4C-	YSV4C-	1
#2 AWG	#6 - #2 AWG	YAV2CL-	YSV2CL-	1	#6 - #2 AWG	YAV2C-	YSV2C-	1
#1 AWG	#4 - #1 AWG	YAV1CL-	YSV1CL-	1	#4 - #1 AWG	YAV1C-	YSV1C-	1
1/0 AWG	#4 - 1/0 AWG	YAV25L-	YSV25L-	1	#6 - 1/0 AWG	YAV25-	YSV25-	2
2/0 AWG	#2 - 2/0 AWG	YAV26L-	YSV26L-	1	#4 - 2/0 AWG	YAV26-	YSV26-	2
3/0 AWG	#1 - 3/0 AWG	YAV27L-	YSV27L-	1	#2 - 3/0 AWG	YAV27-	YSV27-	2
4/0 AWG	1/0 - 4/0 AWG	YAV28L-	YSV28L-	1	#1 - 4/0 AWG	YAV28-	YSV28-	2
250 kcmil	3/0 - 250	YAV29L-	-	1	1/0 - 250	YAV29-	YS29-	2
300 kcmil	4/0 - 313.1	YA32L-	YS32L-	1	2/0 - 313.1	YA32-	YS32-	2
350 kcmil	250 - 373.7	YA34L-	YS34L-	1	3/0 - 373.7	YA34-	YS34-	2
450 kcmil	250 - 444.4	YA36L-	YS36L-	1	4/0 - 444.4	YA36-	YS36-	2
500 kcmil	373.7 - 535.3	YA38L-	YS38L-	1	4/0 - 535.3	YA38-	YS38-	2
600 kcmil	373.7 - 600	YA39L-	YS39L-	2	250 - 600	YA39-	YS39-	3
650 kcmil	444.4 - 646	YA40L-	YS40L-	2	373.3 - 646	YA40-	YS40-	3
750 kcmil	535.3 - 777.7	YA44L-	YS44L-	2	535.3 - 777.7	YA44-	YS44-	3

COPPER CONNECTORS

E-Line Connectors							
		Aluminum			Copper		
Wire Size	Expanded Wire Range	Offset Cat. No.	Center formed Cat. No.	No. of Crimps	Offset Cat. No.	Center formed Cat. No.	No. of Crimps
#8 AWG	#8 AWG	YA8CA-T-E		1			
#6 AWG	#6 AWG						
#4 AWG	#6 - #4						
#2 AWG	#6-#2	YA2CA-T-E	YAC2CA-T-E	1			
#1 AWG	#6-#1						
1/0 AWG	#6-1/0	YA25A-T-E		1	YA25L-T-E	YAC25L-T-E	1
2/0 AWG	#4 - 2/0	YA26A-T-E		2	YA26L-T-E	YAC26L-T-E	1
3/0 AWG	#2 - 3/0	YA27A-T-E	YAC27A-T-E	2			
4/0 AWG	#1 - 4/0	YA28A-T-E		2			
250 kcmil	1/0 - 250						
300 kcmil	2/0 - 300	YA30A-T-E		2	YA30L-T-E	YAC30L-T-E	2
350 kcmil	3/0 - 350	YA31A-T-E	YAC31A-T-E	2			
400 kcmil	4/0 - 400	YA32A-T-E		4			
500 kcmil	4/0 - 500	YA34A-T-E		4	YA34L-T-E		2
500 kcmil	4/0-500				YA342L-T-E		2
600 kcmil	250 - 600	YA36A-T-E		4	YA36L-T-E		2
600 kcmil	250-600				YA362L-T-E		2
700 kcmil	350-700						
750 kcmil	500-750	YA39A-T-E		4	YA39L-T-E		2
750 kcmil	500-750				YA392L-T-E		2
800 kcmil	500-800						
1000 kcmil	750-1000						

*Same number of recommended crimps for both Standard and Expanded wire ranges

Blue highlighted items are industry standard and most frequently ordered.

12-TON U DIES*

BURNDY® Die Sets

Fits Y35, Y39, Y750 Series, PAT750-18V Series, PAT46-18V, Y46 (W/PUADP-1 Adapter)

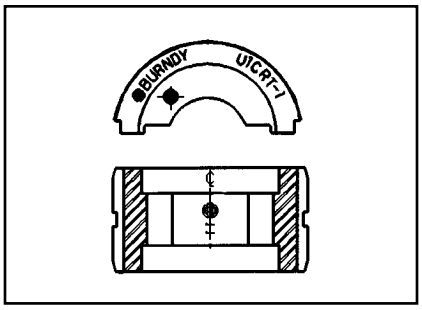

U die case Part# **PT29291**, holds up to 15 dies

Wire Size	Copper	Aluminum
Small #8 Str.	U8CRT	U8CABT
#6 , #5 Str.	U5CRT	U6CABT
#4 Str.	U4CRT	U4CABT
#3 Str.	U3CRT	N/A
#2 Str.	U2CRT	U2CABT
#1 Str.	U1CRT-1	U1CART
1/0 Str.	U25RT	U25ART
2/0 Str.	U26RT	U26ART
3/0 Str.	U27RT	U27ART
4/0 Str.	U28RT	U28ART
250 kcmil	U29RT	U29ART

Wire Size	Copper	Aluminum
300 kcmil	U30RT	U30ART
350 kcmil	U31RT	U31ART
400 kcmil	U32RT	U32ART
500 kcmil	U34RT	U34ART
535 Flex kcmil	U38XRT	N/A
600 kcmil	U36RT	U36ART
750 kcmil	U39RT	U39ART2
Large 777 Flex	U44XRT	N/A

* Non-tension U-type 12-ton dies for YA, YS, YA-A, YS-A style connectors.

NOTE: N/A = not applicable.

W DIES

BURNDY® Die Sets

Fits Tools MD6, MD7, Y500CTHS, PAT600-18V, PATMD6

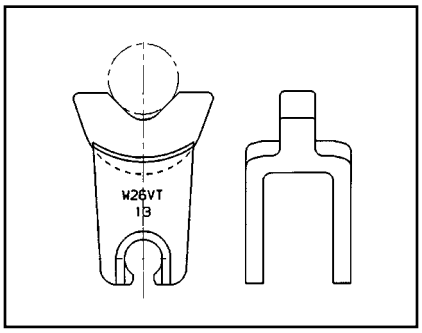

W die case Part# **CASEWDIES**, holds up to 24 dies

Wire Size	Copper	Copper	Aluminum
Small #8	W8CVT	W8CRT	X8CART
#6	W5CVT	W5CRT	W161
#4	W4CVT	W4CRT	W162
#3	W3CRT	W3CRT	N/A
#2	W2CVT	W2CRT	W239
#1	W1CVT	W1CRT	W163
1/0	W25VT	W25CRT	W241
2/0	W26VT	W26CRT	W245
3/0	W27VT	W27CRT	W166
4/0	W28VT	W28CRT	W660
250	*W29VT	W29CRT	N/A
300	*W30VT	W30CRT	N/A
350	*W31VT	W31CRT	*W31ART
400	*W32VT	W32CRT	N/A
450	W33VT	W33CRT	N/A
500	*W34VT	W34CRT	N/A
Large 600	**W36RT	W36CRT	N/A

* These sizes (250-500) for Y5000CTHS, MD7-34(R), BAT500, BCT500HS only.

** For PAT600-18V only.

NOTE: N/A = not applicable.
Suitable for use on YA, YS, YA-A, YS-A type non-tension connectors.

Blue highlighted items are industry standard and most frequently ordered.

Compression Connections

BURNDY®

Die Index Chart

Installation Tooling System														
Conductor		Lugs & Splices One & Two Hole			T&B Index*	Taps Thin-Wall C-taps Run=Tap, AWG only			Taps Heavy Duty C-Taps Run=Tap			Taps H-Taps Run=Tap		
AWG	Flex	Die	Color	Index	Code (Flex)	Die	Color	Index	Die	Color	Index	Die	Color	Index
#8/#6 sol	#8	W8CVT U8CRT	**RED**	49	21	W4CVT	**GRAY**	8	U240	**RED**	240	U11T-1	**GREEN**	11
#6	#6	W5CVT U5CRT	**BLUE**	7	24	W2CVT	**BROWN**	10	UC	**BROWN**	C	UB-GRT	**ORANGE**	BG
#4	#4	W4CVT U4CRT	**GRAY**	8	29	W25VT	**PINK**	12	UC	**BROWN**	C	UC	**BROWN**	C
#3/#2 sol		W3CRT U3CRT	**WHITE**	9	29	W26VT	**BLACK**	13	UC	**BROWN**	C	UC	**BROWN**	C
#2	#2	W2CVT U2CRT	**BROWN**	10	33	W27VT	**ORANGE**	14	UC	**BROWN**	C	UC	**BROWN**	C
#1	#1	W1CVT U1CRT-1	**GREEN**	11	33 (37)	W28VT	**PURPLE**	15	U997	**ORANGE**	997	U654	**PURPLE**	654
1/0	1/0	W25VT U25RT	**PINK**	12	37 (42)	W29VT	**YELLOW**	16	U997	**ORANGE**	997	U654	**PURPLE**	654
2/0	2/0	W26VT U26RT	**BLACK**	13	42 (45)		REFER TO CATALOG		U997	**ORANGE**	997	U654	**PURPLE**	654
3/0	3/0	W27VT U27RT	**ORANGE**	14	45 (50)	-	-	-	U997	**ORANGE**	997	U654	**PURPLE**	654
4/0	4/0	W28VT U28RT	**PURPLE**	15	50 (54)	-	-	-	U997	**ORANGE**	997	U654	**PURPLE**	654
250	4/0 / 250 class G & H	W29VT U29RT	**YELLOW**	16	62	-	-	-	U997	**ORANGE**	997	U654	**PURPLE**	654
300	262/250 class I, K & M	W30VT U30RT	**WHITE**	17	62	-	-	-	U1104	**BROWN**	1104	U1104	**BROWN**	1104
350	313	W31VT U31RT	**RED**	18	66	-	-	-	U1104	**BROWN**	1104	U1104	**BROWN**	1104
	350 / 373	W32VT U32RT	**BLUE**	19	(76)	-	-	-	U1104	**BROWN**	1104	U1104	**BROWN**	1104
500	444	W34VT U34RT	**BROWN**	20	76 (87)	-	-	-	U1104	**BROWN**	1104	U1104	**BROWN**	1104
	500 / 535	U38XRT	**PINK**	L99	(99)	-	-	-	P1103	**BLUE**	1103	PYFR	**YELLOW**	KR
600		U36RT	**GREEN**	22	87	-	-	-	P1103	**BLUE**	1103	PYFR	**YELLOW**	KR
700		U38RT	**PINK**	400	99	-	-	-	P1103	**BLUE**	1103	PYFR	**YELLOW**	KR
750	646	U39RT	**BLACK**	24	(106)	-	-	-	P1103	**BLUE**	1103	PYFR	**YELLOW**	KR
	750 / 777	U44XRT	**YELLOW**	L115	(115)									
800		P40RT	**ORANGE**	25	106	-	-	-	P1102	**WHITE**	1102	PYFR	**YELLOW**	KR
1000		P44RT	**WHITE**	27		-	-	-	P1102	**WHITE**	1102	PYFR	**YELLOW**	KR

* Die set with a dash CK are not UL Listed. Please consult factory for further information

Bolt Equivalent	
Unified Inch Hole Size	Metric Equivalent
1/4″	M6
5/16″	M8
3/8″	M10
1/2″	M12
5/8″	M16

Blue highlighted items are industry standard and most frequently ordered.

TYPE YAEBA-S

STRAIGHT STYLE BATTERY POST HYDENT TERMINALS

#6 - 4/0 AWG Solid and Stranded Copper

BURNDY battery post terminals are made from pure copper alloy and are tin plated to prevent corrosion. They adhere to SAE, JIS and DIN stud standards. Typical applications are automotive, marine, transportation, Petrochemical, OEM markets.

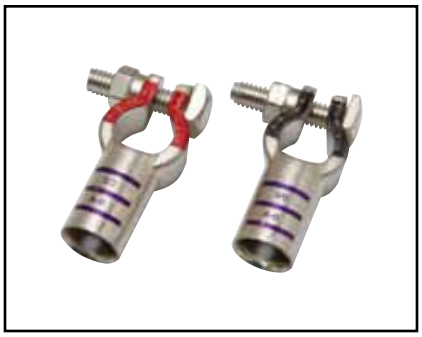

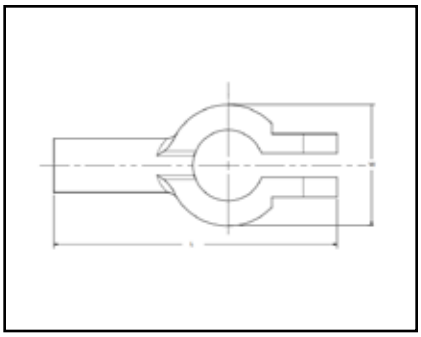

Features & Benefits

- Color coded for easy identification
- Chamfered end
- Made of copper alloy, tin plated for corrosion resistance
- Comes standard with stainless steel hardware installed

Catalog Number	Wire Range	Dimensions		Bulk Catalog Number	Conn. Color Code	Installation Tooling				Color Code Die	Die Index	Strip Length
						Mech.	Hyd.		Dieless (# Crimps)			
		L	W			MD 6 MD7-34R	PATMD6 PAT600	Y35, Y750, PAT750				
YAEBAS6CNTN	#6	2.30"	0.98"	YAEBAS6CNTNOEM	Blue	W5CVT (1) W5CRT (1)	W5CVT (1) W5CRT (1)	U5CRT (1)	Hyd. PAT81KFT PAT4-C834 PAT644 (1) Mech.. MY29-11 MRC840 (1)	Blue	7	1-3/32"
YAEBAS6CPTN		2.30"	1.02"	YAEBAS6CPTNOEM								
YAEBAS4CNTN	#4	2.30"	0.98"	YAEBAS4CNTNOEM	Gray	W4CVT (1) W4CRT (1)	W4CVT (1) W4CRT (1)	U4CRT (1)		Gray	6	
YAEBAS4CPTN		2.30"	1.02"	YAEBAS4CPTNOEM								
YAEBAS2CNTN	#2	2.30"	0.98"	YAEBAS2CNTNOEM	Green	W2CVT (1) W2CRT (1)	W2CVT (1) W2CRT (1)	U2CRT (1)		Brown	10	
YAEBAS2CPTN		2.30"	1.02"	YAEBAS2CPTNOEM								
YAEBAS1CNTN	#1	2.30"	0.98"	YAEBAS1CNTNOEM	Pink	W1CVT (1) W1CRT-1 (1)	W1CVT (1) W1CRT-1 (1)	U1CRT (1)		Green	11	
YAEBAS1CPTN		2.30"	1.02"	YAEBAS1CPTNOEM								
YAEBAS25NTN	1/0	2.36"	0.98"	YAEBAS25NTNOEM	Black	W25VT (1) W25RT (1)	W25VT (1) W25RT (1)	U25RT (1)	Hyd. PAT81KFT PAT4-C834 PAT644 (1) Mech.. MY29-11 MRC840 (2)	Pink	12	
YAEBAS25PTN		2.36"	1.02"	YAEBAS25PTNOEM								
YAEBAS26NTN	2/0	2.36"	0.98"	YAEBAS26NTNOEM	Orange	W26VT (1) W26RT (1)	W26VT (1) W26RT (1)	U26RT (1)		Black	13	
YAEBAS26PTN		2.36"	1.02"	YAEBAS26PTNOEM								
YAEBAS27NTN	3/0	2.36"	0.98"	YAEBAS27NTNOEM	Purple	W27VT (1) W27RT (1)	W27VT (1) W27RT (1)	U27RT (1)		Orange	14	
YAEBAS27PTN		2.36"	1.02"	YAEBAS27PTNOEM								
YAEBAS28NTN	4/0	2.36"	0.98"	YAEBAS28NTNOEM	Yellow	W28VT (1) W28RT (1)	W28VT (1) W28RT (1)	U28RT (1)		Purple	15	
YAEBAS28PTN		2.36"	1.02"	YAEBAS28PTNOEM								

Blue highlighted items are industry standard and most frequently ordered.

TYPE YAEBA-F

T STYLE BATTERY POST HYDENT™ TERMINALS

#2 - 4/0 AWG Solid and Stranded Copper

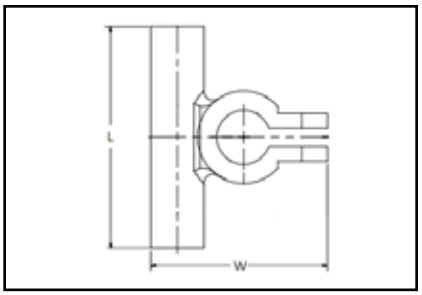

BURNDY battery post terminals are made from pure copper alloy and are tin plated to prevent corrosion. They adhere to SAE, JIS and DIN stud standards. Typical applications are automotive, marine, transportation, Petrochemical, OEM markets.

Features & Benefits

- Color coded for easy identification
- Chamfered end
- Made of copper alloy, tin plated for corrosion resistance
- Comes standard with stainless steel hardware installed

Catalog Number	Wire Range	Dimensions		Bulk Catalog Number	Conn. Color Code	Installation Tooling				Die Color Code	Die Index	Strip Length
						Mechanical	Hydraulic		Dieless (# Crimps)			
		L	W			MD 6 MD7-34R	PAT MD6 PAT600	Y35, Y750, PAT750				
YAEBAF2CNTN	#2	2.36"	1.89"	YAEBAF2CNTNOEM	Green	W2CVT (1) W2CRT (1)	W2CVT (1) W2CRT (1)	U2CRT (1)	MECH. MY29-11(1) MRC840 (1)	Brown	10	1-9/32"
YAEBAF2CPTN		2.36"	1.89"	YAEBAF2CPTNOEM								
YAEBAF1CNTN	#1	2.36"	1.89"	YAEBAF1CNTNOEM	Pink	W1CVT (1) W1CRT-1 (1)	W1CVT (1) W1CRT-1 (1)	U1CRT-1 (1)		Green	11	
YAEBAF1CPTN		2.36"	1.89"	YAEBAF1CPTNOEM								
YAEBAF25NTN	1/0	2.36"	1.89"	YAEBAF25NTNOEM	Black	W25VT (1) W25RT (1)	W25VT (1) W25RT (1)	U25RT (1)	MECH. MY29-11(1) MRC840 (2)	Pink	12	
YAEBAF25PTN		2.36"	1.89"	YAEBAF25PTNOEM								
YAEBAF26NTN	2/0	2.36"	1.97"	YAEBAF26NTNOEM	Orange	W26VT (1) W26RT (1)	W26VT (1) W26RT (1)	U26RT (1)		Black	13	
YAEBAF26PTN		2.36"	1.97"	YAEBAF26PTNOEM								
YAEBAF27NTN	3/0	2.36"	1.97"	YAEBAF27NTNOEM	Purple	W27VT (1) W27RT (1)	W27VT (1) W27RT (1)	U27RT (1)		Or-ange	14	
YAEBAF27PTN		2.36"	1.97"	YAEBAF27PTNOEM								
YAEBAF28NTN	4/0	2.36"	1.97"	YAEBAF28NTNOEM	Yellow	W28VT (1) W28RT (1)	W28VT (1) W28RT (1)	U28RT (1)		Purple	15	
YAEBAF28PTN		2.36"	1.97"	YAEBAF28PTNOEM								

Blue highlighted items are industry standard and most frequently ordered.

TYPE YAGB

ONE HOLE HYLUG™ BATTERY TERMINAL

#6 - 4/0 AWG Solid and Stranded Copper

BURNDY battery terminals are made from pure copper alloy and are tin plated to prevent corrosion. They adhere to SAE, JIS and DIN stud standards. Typical applications are automotive, marine, transportation, Petrochemical, OEM markets.

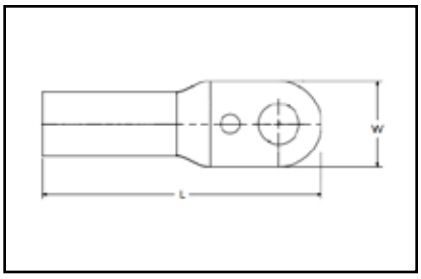

Features & Benefits

- Color coded for easy identification
- Chamfered end
- Made of copper alloy, tin plated for corrosion resistance

Catalog Number	Wire Range	Stud Size	Dimensions		Bulk Catalog Number	Conn. Color Code	Installation Tooling				Color Code Die	Die Index	Strip Length
							Mech.	Hyd.					
			L	W			MD 6 MD7-34R	PATMD6 PAT600	Y35, Y750, PAT750	Dieless (# Crimps)			
YAGB6CLTC10FX	#6	#10	1.46"	0.44"	YAGB6CLTC10FXOEM	Blue	W5CVT (1) W5CRT (1)	W5CVT (1) W5CRT (1)	U5CRT (1)	HYD. PAT81KFT PAT4PC834 PAT644 (1) MECH. MY29-11 MRC840 (1)	Blue	7	7/8"
YAGB6CLTC14FX		1/4"	1.46"	0.44"	YAGB6CLTC14FXOEM								
YAGB6CLTC516FX		5/16"	1.61"	0.60"	YAGB6CLTC516FXOEM								
YAGB6CLTC38FX		3/8"	1.61"	0.60"	YAGB6CLTC38FXOEM								
YAGB6CLTC12FX		1/2"	1.73"	0.74"	YAGB6CLTC12FXOEM								
YAGB4CLTC10FX	#4	#10	1.97"	0.75"	YAGB4CLTC10FXOEM	Gray	W4CVT (1) W4CRT (1)	W4CVT (1) W4CRT (1)	U4CRT (1)		Gray	6	15/16"
YAGB4CLTC14FX		1/4"	1.97"	0.75"	YAGB4CLTC14FXOEM								
YAGB4CLTC516FX		5/16"	1.97"	0.75"	YAGB4CLTC516FXOEM								
YAGB4CLTC38FX		3/8"	1.97"	0.75"	YAGB4CLTC38FXOEM								
YAGB4CLTC12FX		1/2"	1.97"	0.75"	YAGB4CLTC12FXOEM								
YAGB2CLTC10FX	#2	#10	2.09"	0.81"	YAGB2CLTC10FXOEM	Green	W2CVT (1) W2CRT (1)	W2CVT (1) W2CRT (1)	U2CRT (1)		Brown	10	
YAGB2CLTC14FX		1/4"	2.09"	0.81"	YAGB2CLTC14FXOEM								
YAGB2CLTC516FX		5/16"	2.09"	0.81"	YAGB2CLTC516FXOEM								
YAGB2CLTC38FX		3/8"	2.09"	0.81"	YAGB2CLTC38FXOEM								
YAGB2CLTC12FX		1/2"	2.09"	0.81"	YAGB2CLTC12FXOEM								
YAGB25LTC14FX	1/0	1/4"	2.40"	0.87"	YAGB25LTC14FXOEM	Black	W25VT (1) W25RT (1)	W25VT (1) W25RT (1)	U25RT (1)	HYD. PAT81KFT PAT4PC834 PAT644 (1) MECH. MY29-11 MRC840 (2)	Pink	12	1-3/16"
YAGB25LTC516FX		5/16"	2.40"	0.87"	YAGB25LTC516FXOEM								
YAGB25LTC38FX		3/8"	2.40"	0.87"	YAGB25LTC38FXOEM								
YAGB25LTC12FX		1/2"	2.40"	0.87"	YAGB25LTC12FXOEM								
YAGB26LTC14FX	2/0	1/4"	2.44"	0.91"	YAGB26LTC14FXOEM	Orange	W26VT (1) W26RT (1)	W26VT (1) W26RT (1)	U26RT (1)		Black	13	
YAGB26LTC516FX		5/16"	2.44"	0.91"	YAGB26LTC516FXOEM								
YAGB26LTC38FX		3/8"	2.44"	0.91"	YAGB26LTC38FXOEM								
YAGB26LTC12FX		1/2"	2.44"	0.91"	YAGB26LTC12FXOEM								
YAGB28LTC14FX	4/0	1/4"	2.56"	1.10"	YAGB28LTC14FXOEM	Yellow	W28VT (1) W28RT (1)	W28VT (1) W28RT (1)	U28RT (1)	HYD. PAT81KFT PAT4PC834 PAT644 (1) MECH. MY29-11 MRC840 (2)	Purple	15	1-3/16"
YAGB28LTC516FX		5/16"	2.56"	1.10"	YAGB28LTC516FXOEM								
YAGB28LTC38FX		3/8"	2.56"	1.10"	YAGB28LTC38FXOEM								
YAGB28LTC12FX		1/2"	2.56"	1.10"	YAGB28LTC12FXOEM								

Blue highlighted items are industry standard and most frequently ordered.

TYPES YBA, YBA-FX and YBAV-FX

HYLUG™

Copper and Aluminum Compression Terminals

UL Listed 90° C, 600 Volts to 35 kV

The Break-Away HYLUG™ line of Copper and Aluminum terminals are designed to provide maximum field flexibility by allowing the installer (using the Break-Away feature) to easily convert two-hole terminals to one-hole terminals to suit the application.

The Break-Away HYLUG™ line of terminals encompasses a wide range of features that affords the installer the flexibility in meeting the requirements for challenging projects.

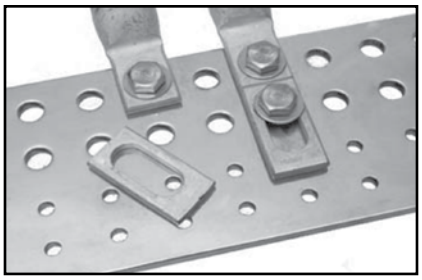

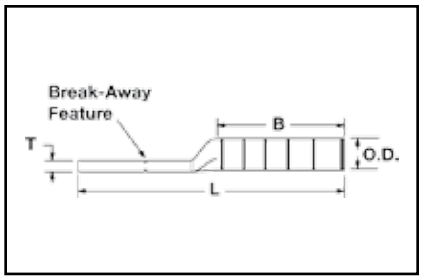

Features & Benefits

- Break-Away feature allows for field modification of the terminal from a two-hole design to a one-hole
- design while retaining UL Listing and CSA Certification
- Field modification of the terminal does not require specialized tooling or training
- Stud size is 1/2" (12mm²) on the first stud as well as the slotted second stud
- Slotted second stud provides built in flexibility for the terminal to conform to various bus bar dimensions. With the slotted second stud the terminal can be used on two-hole spacing
- ranging from 1.00 to 1.75 for 1/2 stud hole sizes and 0.63 to 1.00 for 1/4 stud hole size
- Narrow tongue design allows for the terminal to fit into tight spaces
- Accommodates a wide range of conductor combinations (AWG, Compact, DLO, Flex and Metric)
- Break-Away HYLUG™ line of terminals can be installed with standard BURNDY® tooling such as PAT750XT-18V and U-Dies
- Terminals are range taking when installed with Y644HSXT or PAT644XT-18V tooling platforms

Copper Conductor

Catalog Number	Conductor Size	mm²	Dimensions						Installation Tooling (# of Crimps)					
			Stud Hole Spacing	Stud Hole Size [MM]	Tongue Width	B	T	L	Dieless	MD6, MD7, MD7-34R platforms OUR840**	Y500CTHS, PAT60018V, PATMD6 platform	Y35, Y39, Y750, *Y46, PAT750, *PAT46 platforms	Color Code	Die Index
YBAV25FX14	1/0 Flex (275/24); 1/0 AWG	50	0.63″ to 1.08″	1/4″ [6]	0.73″	1.50″	0.13″	3.69″	MY29 (MY29 platform tools can only be used on Code Conductor), PAT644XT-18V & Y644 platforms (1) 4-POINT® Y81KFT, PAT81KFT, Y4PC, PAT4PC platforms (2)	W25VT (4) X25RT (4) W25RT (4)	W25VT (4) X25RT (4) W25RT (4)	U25RT (2)	Pink	12 or 348
YBAV26FX14	2/0 Flex (325/24); 2/0 AWG	70	0.63″ to 1.08″	1/4″ [6]	0.89″	1.50″	0.13″	3.74″		W26VT (4) X26RT (4) W26RT (4)	W26VT (4) X26RT (4) W26RT (4)	U26RT (2)	Black	13
YBAV27FX14	3/0 Flex (450/24); 3/0 AWG	95	0.63″ to 1.08″	1/4″ [6]	0.87″	1.50″	0.14″	3.78″		W27VT (4) X27RT (4) W27RT (4)	W27VT (4) X27RT (4) W27RT (4)	U27RT (4)	Orange	14
YBAV28FX	4/0 Flex (550/24); 4/0 AWG	120	1″ to 1.75″	1/2″ [12]	0.94″	1.62″	0.14″	5.24″		X28RT (6) W28RT (4) W28VT (4)	X28RT (6) W28RT (4) W28VT (4)	U28RT (2)	Purple	15
YBA29	250 kcmil (Class A & B)	—	1″ to 1.75″	1/2″ [12]	0.96″	1.62″	0.16″	5.21″	PAT644XT-18V & Y644 platforms (1), 4-POINT® Y81KFT, PAT81KFT, Y4PC, PAT4PC platforms (2) for YBA29, (3) for YBA31FX & YBA32FX (4) for YBA34FX	W29RT (4) W29VT (4)	W29RT (4) W29VT (4)	U29RT (2)	Yellow	16
YBA31FX	250 kcmil (Class I;K & M)	150	1″ to 1.75″	1/2″ [12]	0.96″	2.00″	0.18″	5.68″		W30VT(4) W30RT(4)	W30VT (4) W30RT (4)	U30RT (4)	White	17 or 298
YBA32FX	313.1 kcmil Flex (775/24)	185	1″ to 1.75″	1/2″ [12]	0.96″	2.12″	0.19″	5.85″		W31VT (4) W31RT (4)	W31VT (4) W31RT (4)	U31RT (4)	Red	18 or 324
YBA34FX	373.7 kcmil Flex (775/24)	240	1″ to 1.75″	1/2″ [12]	0.96″	2.25″	0.23″	6.08″		W32VT (4) W32RT (4)	W32VT (4) W32RT (4)	U32RT (4)	Blue	19 or 470

* Y46 and PAT46 platforms require PUADP-1 adaptor to use U dies

** OUR840 can use X-style dies only

Blue highlighted items are industry standard and most frequently ordered.

TYPES YBA, YBA-FX and YBAV-FX

BREAK-AWAY HYLUG™ (Continued)

Copper and Aluminum Compression Terminals

UL Listed 90° C, 600 Volts to 35 kV

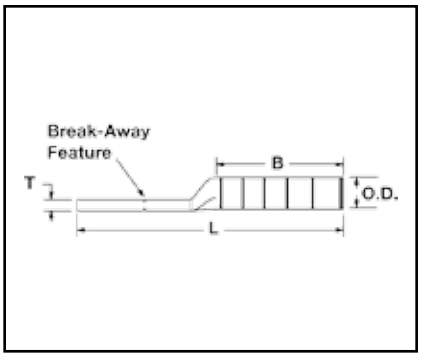

Copper Conductor (Continued)

Catalog Number	Conductor Size	mm²	Dimensions						Installation Tooling (# of Crimps)			
			Stud Hole Spacing	Stud Hole Size [MM]	Tongue Width	B	T	L	Dieless	Y35, Y39, Y750, *Y46, PAT750, *PAT46 platforms	Color Code	Die Index
YBA36FX	444.4 kcmil (1100/24); 450 kcmil Flex	-	1″ to 1.75″	1/2″ [12]	1.47″	2.69″	0.27″	6.59″	Y644HSXT (1) PAT644XT-18V (1) Y81KFT (2) PAT81KFT (2)	U34RT (4)	Brown	20 or 299
YBA36FX58		-	1″ to 1.75″	5/8″ [16]	1.47″	2.69″	0.27″	6.59″				
YBA38FX	535.3 (1325/#24); 500 kcmil	300	1″ to 1.75″	1/2″ [12]	1.62″	2.81″	0.27″	6.76″		U38XRT (4)	Pink	L99
YBA39	750 kcmil (Code Class AA; A & B)	-	1″ to 1.75″	1/2″ [12]	1.63″	2.88″	0.27″	6.87″		U39RT (4)	Black	24
YBA44FX	777.7 (1925/#24) 750 kcmil Flex	500	1″ to 1.75″	1/2″ [12]	1.62″	3.00″	0.32″	7.14″		U44XRT (4)	Yellow	L115
YBA44FX58			1″ to 1.75″	5/8″ [16]	1.62″	3.00″	0.32″	7.14″				

* Y46 and PAT46 platforms require PUADP-1 adaptor to use U dies

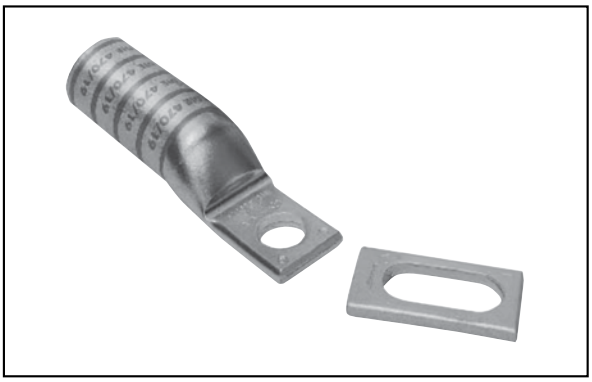

Blue highlighted items are industry standard and most frequently ordered.

TYPES YBA-A

BREAK-AWAY HYLUG™

Copper and Aluminum Compression Terminals

UL Listed 90° C,
600 Volts to 35 kV

The Break-Away HYLUG™ line of Copper and Aluminum terminals are designed to provide maximum field flexibility by allowing the installer (using the break-away feature) to easily convert a two-hole terminal into a one-hole terminal to suit the application.

The Break-Away HYLUG™ line of terminals encompasses a wide range of features that offers the installer the flexibility to meet the requirements of challenging projects.

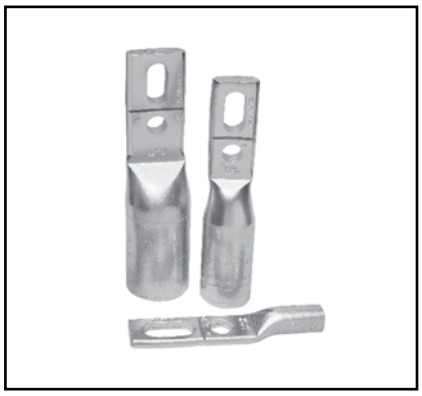

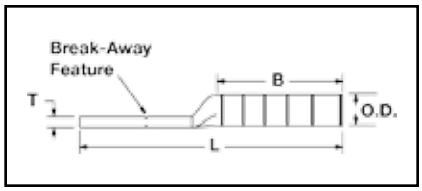

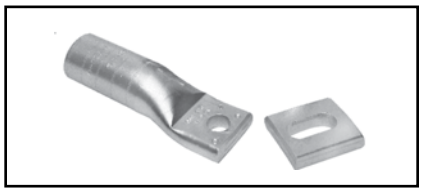

Features & Benefits

- Break-Away feature allows for field modification of the terminal from a two-hole design to a one-hole design while retaining UL Listing and CSA Certification
- Field modification of the terminal does not require specialized tooling or training
- Stud size is 1/2" on the first stud as well as the slotted second stud
- Narrow tongue design allows for the terminal to fit into tight spaces
- Slotted second stud provides built in flexibility for the terminal to conform to various bus bar dimensions. With the slotted second stud the terminal can be used on two-hole spacing ranging from 1.75" down to 1.00" for 1/2" stud size
- Break-Away HYLUG™ line of terminals can be installed with standard BURNDY® tooling such as PAT750XT-18V and U-Dies
- Terminals are range taking when installed with Y644 or PAT644XT-18V tooling platforms

Aluminum Conductor

Catalog Number	Conductor Size (Concentric and Compact)	Dimensions						Installation Tooling (# of crimps)					
		Stud Hole Spacing	Stud Hole Size	Tongue Width	B	T	L	Dieless	MD6, MD7, MD7-34R platforms OUR840**	Y500CTHS, PAT60018V, PATMD6 platform	Y35, Y39, Y750, *Y46, PAT750, *PAT46 platforms	Color Code	Die Index
YBA25A	1/0	1″ to 1.75″	1/2″ [12]	1.03″	1.05″	0.17″	4.59″	MY29 (MY29 platform tools can only be used on Code Conductor), PAT644XT-18V & Y644 platforms (1), 4-POINT® Y81KFT, PAT81KFT, Y4PC, PAT4PC platforms (2)	W241 (2) X241 (4)	W241 (2)	U25ART (1)	Tan	296
YBA26A	2/0	1″ to 1.75″	1/2″ [12]	1.03″	1.17″	0.20″	4.78″		—	—	U26ART (2)	Olive	297
YBA27A	3/0	1″ to 1.75″	1/2″ [12]	1.04″	1.31″	0.26″	5.02″		—	—	U27ART (2)	Ruby	467
YBA28A	4/0	1″ to 1.75″	1/2″ [12]	1.17″	1.39″	0.30″	5.19″		W660 (4) X660 (8)	W660 (4)	U28ART (2)	White	298
YBA29A	250 kcmil	1″ to 1.75″	1/2″ [12]	1.26″	1.45″	0.33″	5.28″	PAT644XT-18V & Y644 platforms (1), 4-POINT® Y81KFT, PAT81KFT, Y4PC, PAT4PC platforms (2)	—	—	U29ART (2)	Red	324
YBA30A	300 kcmil	1″ to 1.75″	1/2″ [12]	1.38″	1.53″	0.36″	5.64″		—	—	U30ART (2)	Blue	470
YBA31A	350 kcmil	1″ to 1.75″	1/2″ [12]	1.52″	1.85″	0.39″	6.07″	PAT644XT-18V & Y644 platforms (1), 4-POINT® Y81KFT, PAT81KFT, Y4PC, PAT4PC platforms (4)	—	—	U31ART (2)	Brown	299
YBA32A	400 kcmil	1″ to 1.75″	1/2″ [12]	1.62″	2.26″	0.43″	6.15″		—	—	U32ART (4)	Green	472
YBA34A	500 kcmil	1″ to 1.75″	1/2″ [12]	1.62″	2.34″	0.46″	6.80″		—	—	U34ART (4)	Pink	300
YBA36A	600 kcmil	1″ to 1.75″	1/2″ [12]	1.31″	2.47″	0.52″	7.09″		—	—	U36ART (4)	Black	473
YBA39A	700 & 750 kcmil	1″ to 1.75″	1/2″ [12]	1.62″	2.46″	0.43″	7.07″		—	—	U39ART-2 (2)	Yellow	936
YBA42A	600 - 900 kcmil	1″ to 1.75″	1/2″ [12]	1.62″	2.46″	0.39″	7.15″		—	—	U42ART (4)^	Gray	303
YBA44A	1000 kcmil	1″ to 1.75″	1/2″ [12]	1.65″	2.74″	0.55″	7.76″	Y644HSXTBH (1)	—	—	P44ART† (4)	Brown	302

† Can only be crimped with PAT46 or Y46 platform tools using the P44ART die

* Y46 and PAT46 platforms require PUADP-1 adaptor to use U dies

** OUR840 can use X-style dies only

^ U die for 900 AL only

Blue highlighted items are industry standard and most frequently ordered.

TYPES YBA-KIT, YA-KIT, YBAFX-KIT, YAFX-KIT

Copper and Aluminum Turbine Lug Kits

UL Listed 90°C,
600 Volts to 35 kV

Aiding in the staging and flow of material on a project, the BURNDY® Turbine Lug Kits are designed to meet the termination requirements for the standard 1.5 MW wind turbine, improving overall project efficiency. Each lug kit contains UL Listed and CSA Certified copper or aluminum lugs. Kits include the required number of lugs needed to terminate aluminum or copper conductors on the low voltage side of a base transformer or the down tower switchgear. There are four individual kits, two for aluminum, two for copper, they are all custom designed to handle any termination requirements.

Features & Benefits

- **YA44A3** (1000 kcmil aluminum) HYLUG™, 2-hole, narrow tongue aluminum compression terminal that is dual rated for both copper and aluminum
- **YBA44A** (1000 kcmil, 1000 compact aluminum) Break-Away HYLUG™, 2-hole narrow tongue aluminum compression terminal that is dual rated for both copper and aluminum. The break-away feature allows for field modification of the terminal from a 2-hole to a 1-hole terminal and still retain UL Listing and CSA Certification
- **YAZ442NNTFX** (777.7 Flex,1925/24 str., 750 kcmil copper) HYLUG™, 2-hole narrow tongue copper compression terminal that accommodates flex and AWG conductor
- **YBA44FX** (777.7 Flex, 1925/24 str. [750 kcmil] nom. copper) Break-Away HYLUG™, 2-hole, narrow tongue copper compression terminal that accepts a wide range of conductor combinations (AWG, compact, DLO, flex, metric). The Break-Away feature allows field modification of the terminal from a 2-hole to 1-hole terminal and still retain UL Listing and CSA Certification
- Both aluminum and copper low voltage turbine lug kits include **YA29-2N** (250 kcmil, copper, 2-hole) lugs for terminating grounding conductor
- Aluminum kits are shipped with squeeze packets of PENETROX™ oxide inhibitor for terminating aluminum conductor

Copper Kits

Catalog Number	Includes:
YBAFX15CLKIT	15 pcs YBA44FX (777.7 Flex Cu 2-hole NEMA lug); 3 pcs YA29-2N (250 kcmil Cu 2-hole NEMA lug)
YAFX15CLKIT	15 pcs YAZ442NNTFX (777.7 Flex Cu 2-hole NEMA lug); 3 pcs YA29-2N (250 kcmil Cu 2-hole NEMA lug)

Aluminum Kits

Catalog Number	Includes:
YBA15ALKIT	15 pcs YBA44A (1000 Al 2-hole NEMA lug); 3 pcs YA29-2N (250 kcmil Cu 2-hole NEMA lug); 1 squeeze tube (1/2 oz) of PENETROX™ oxide inhibitor
YA15ALKIT	15 pcs YA44A3 (1000 Al 2-hole NEMA lug); 3 pcs YA29-2N (250 kcmil Cu 2-hole NEMA lug); 1 squeeze tube (1/2 oz) of PENETROX™ oxide inhibitor

Heat shrink and mounting hardware sold separately.

Blue highlighted items are industry standard and most frequently ordered.

TYPES YA-2NU, YA-4NU

Blank Tongue HYLUG™

The Blank Tongue line of Copper Code HYLUG™ terminals are designed to provide maximum field flexibility. Scored lines prevent the drill from walking when trying to drill in this area. This innovative design allows the installer to customize the tongue drilling to fit their specific application while maintaining UL Listing and CSA Certification.

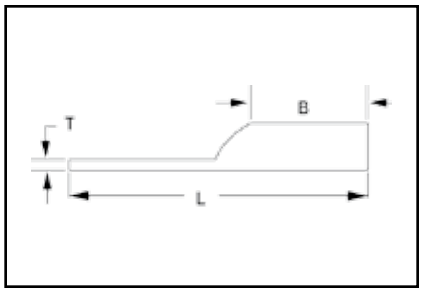

Features & Benefits

- Manufactured from seamless high conductivity electrolytic copper tubing with heavy duty wall thickness
- Internally beveled barrel end
- Proper compression systems form a highly efficient electrical connection
- Dimples located at each end of the scored line represent the location of the NEMA standard hole spacing
- Scored line locates the center of the tongue and prevents the drill from walking when trying to drill in this area
- Offered in a wide range of code conductor sizes

Catalog Number	Conductor		Min. Bolt Hole**	Tongue Width	Figure Dimensions			Installation Tooling (# of crimps)				Color Code	Die Index	Wire Strip Length
									Mechanical	Hydraulic				
	AWG	*** MM²			B	T	L	Dieless	MD6, OUR840, MD7-34R	BCT500HS, Y500CTHS	Y750, Y46*, PAT750			
YA8C2NU	#8 AWG #6 Sol #8 Sol #8 Weld 37/24	—	#10	0.83″	0.81″	0.12″	4.08″	Y1MRTC (2) MY29- 11 (1) MY29-3 (1)	W8CRT (1) W8CVT (1) X8CRT (2)	W8CRT (1)	U8CRT (1) U8CRT (1)	Red	49	7/8″
YA6C2NU	#6 AWG	—	#10	0.83″	1.12″	0.12″	4.40″	Y1MRTC (2) MY29-11 (1) MY29-3 (1) MRC840 (2) Y81KFT (1) Y81KFTBMH (1) PAT81KFT-18V (1)	W5CVT (2) W5CRT (2) X5CRT (2) X8CART (2)	W5CVT (2) W5CRT (2) X5CRT (2) X8CART (2)	U5CRT (2) U8CABT (2)	Blue	7 or 374	1-3/16″
YA5C2NU	#5 AWG	16	—	0.83″	1.12″	0.12″	4.43″	MY29-3 (2) MY29-1 (2) MRC840 (2) Y644HSXT (1) Y81KFT (1) Y81KFTMBH (1) PAT81KFT-18V (1)	W5CRT (2) W5CVT (2) X5CRT (2)	X5CRT (2) X5CVT (2) W5CRT (2)	U5CRT (2)	Blue	7	1-3/16″
YA4C2NU	#4 AWG	—	#10	0.83″	1.12″	0.12″	4.45″	Y1MRTC (4) MY29-3 (2) MY29-11 (2) MRC840 (2) Y644HSXT (1) Y81KFT (1) Y81KFTBMH (1) PAT81KFT-18V (1)	W4CVT (2) W4CRT (2) X4CRT (2)	W4CVT (2) W4CRT (2) X4CRT (2)	U4CRT (2) U6CABT (2)	Gray	8 or 346	1-3/16″
YA3C2NU	#3 AWG #2 Sol.	25	1/4″	0.83″	1.25″	0.12″	4.62″		W3CRT (2)	W3CRT (2)	U3CRT (2)	White	9	1-5/16″

* Use PUADP-1 adaptor with U dies in Y46 HYPRESS™
** Minimum bolt hole size must be maintained for UL & CSA
*** The MM² conductor sizes listed are the recommendations for Class 2 conductor
‡ Requires Y60BHU HYPRESS™

Blue highlighted items are industry standard and most frequently ordered.

TYPES YA-2NU, YA-4NU

Blank Tongue HYLUG™ (Continued)

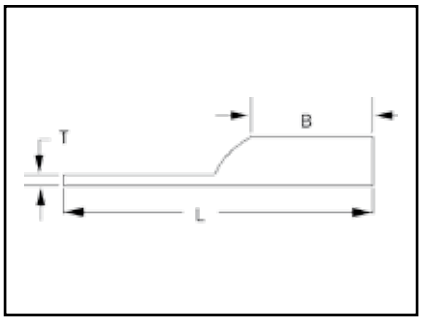

Catalog Number	Conductor AWG	Conductor *** MM²	Min. Bolt Hole**	Tongue Width	Figure Dimensions B	Figure Dimensions T	Figure Dimensions L	Installation Tooling (# of crimps): Dieless	Mechanical: MD6, OUR840, MD7-34R	Hydraulic: BCT500HS, Y500CTHS	Hydraulic: Y750, Y46*, PAT750	Color Code	Die Index	Wire Strip Length
YA2C2NU	#2 AWG	35	1/4″	0.83″	1.25″	0.12″	4.64″	Y1MRTC (4) MY29-3 (2) MY29-11 (2) MRC840 (2) Y644HSXT (1) Y81KFT (2) Y81KFTBMH (2) PAT81KFT-18V (2)	W2CVT (2) W2CRT (2) X2CRT (2)	W2CVT (2) W2CRT (2) X2CRT (2)	U2CRT (2)	Brown	10	1-5/16″
YA1C2NU	#1 AWG	50	1/4″	0.83″	1.38″	0.12″	4.82″		W1CVT (2) W1CRT-1 (2) X1CRT-1 (2)	W1CVT (2) W1CRT-1 (2) X1CRT-1 (2)	U1CRT-1 (2) U4CABT (2)	Green	11	1-7/16″
YA252NU	1/0 AWG	—	1/4″	0.83″	1.38″	0.11″	4.81″	MY29-3 (2) MY29-11 (2) MRC840 (4) Y644HSXT (1) Y81KFT (2) Y81KFTMBH (2) PAT81KFT-18V (2)	W25VT (4) W25RT (4) X25RT (4)	W25VT (4) W25RT (4) X25RT (4)	U25RT (2) U2CABT (2)	Pink	12 to 348	1-7/16″
YA262NU	2/0 AWG	70	1/4″	0.83″	1.50″	0.12″	4.97″		W26VT (4) W26RT (4) X26RT (4)	W26VT (4) W26RT (4) X26RT (4)	U26RT (2)	Black	13	1-9/16″
YA272NU	3/0 AWG	—	1/4″	0.91″	1.50″	0.13″	5.01″		W27VT (4) W27RT (4) X27RT (6)	W27VT (4) W27RT (4) X27RT (6)	U27RT (2)	Orange	14	1-9/16″
YA282NU	4/0 AWG	—	1/4″	1.02″	1.62″	0.14″	5.17″		W28VT (4) W28RT (4) X28RT (6)	W28VT (4) W28RT (4) X28RT (6)	U28RT (2)	Purple	15	1-11/16″
YA292NU	250 kcmil	120	1/4″	1.11″	1.62″	0.16″	5.21″	MY29-3 (2) MY29-11 (2) Y644HSXT (1) Y81KFT (2) Y81KFTMBH (2) PAT81KFT-18V (2)	W29VT (4) X29RT (8)	W29VT (4) W29RT (4) X29RT (8)	U29RT (2)	Yellow	16	1-11/16″
YA302NU	300 kcmil	150	1/4″	1.20″	2.00″	0.16″	5.64″	Y644HSXT (1) Y81KFT (3) Y81KFTMBH (3) PAT81KFT-18V (3)	W30VT (4)	W30VT (4) W30RT (4)	U30RT (4) U28ART (4)	White	17	2-1/16″
YA312NU	350 kcmil	185	1/4″	1.29″	2.00″	0.18″	5.68″		W31VT (4)	W31VT (4) W31RT (4)	U31RT (4) U29ART (4)	Red	18	2-1/16″
YA322NU	400 kcmil	—	3/8″	1.40″	2.12″	0.19″	5.85″		W32VT (4)	W32VT (4) W32RT (4)	U32RT (4) U30ART (4)	Blue	19 or 470	2-3/16″
YA342NU	500 kcmil	240	3/8″	1.55″	2.25″	0.22″	6.06″	Y644HSXT (1) Y81KFT (4) Y81KFTMBH (4) PAT81KFT-18V (4)	W34VT (4)	W34VT (4) W34RT (4)	U34RT (4) U31ART (4)	Brown	20 or 299	2-5/16″
YA362NU	600 kcmil	300	3/8″	1.73″	2.69″	0.26″	6.59″		—	—	U36RT (4) U32ART (4)	Green	22 or 472	2-3/4″

* Use PUADP-1 adaptor with U dies in Y46 HYPRESS™

** Minimum bolt hole size must be maintained for UL & CSA

*** The MM² conductor sizes listed are the recommendations for Class 2 conductor

‡ Requires Y60BHU HYPRESS™

Blue highlighted items are industry standard and most frequently ordered.

TYPES YA-2NU, YA-4NU

Blank Tongue HYLUG™ (Continued)

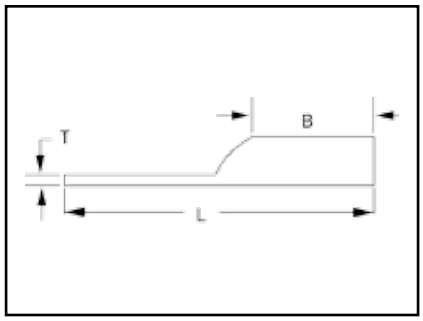

Catalog Number	Conductor AWG	Conductor *** MM²	Min. Bolt Hole**	Tongue Width	Figure Dimensions B	Figure Dimensions T	Figure Dimensions L	Installation Tooling (# of crimps): Dieless	Mechanical: MD6, OUR840, MD7-34R	Hydraulic: BCT500HS, Y500CTHS	Hydraulic: Y750, Y46*, PAT750	Color Code	Die Index	Wire Strip Length
YA392NU	750 kcmil	375	3/8″	1.91″	2.88″	0.26″	6.87″	Y644HSXT (1) Y81KFT (3) Y81KFTMBH (3) PAT81KFT-18V (3)	—	—	U39RT (4) P39RT (4)**	Black	24	2-15/16″
YA402NU	800 kcmil	400	3/8″	1.98″	2.94″	0.30″	6.95″				P40RT (4)	Orange	25	3″
YA442NU	1000 kcmil	500	3/8″	2.18″	3.00″	0.32″	7.14″				P44RT (4)**	White	27	3-1/16″
YA452NU	1250 kcmil	—	3/8″	2.46″	3.19″	0.38″	7.44″	—			P45RT (6)**	Yellow	29	3-1/4″
YA462NU	1500 kcmil	800	3/8″	2.69″	3.19″	0.40″	7.55″				P46RT (6)**	Green	31	3-1/4″
YA472NU ‡	1750 kcmil	—	3/8″	2.90″	3.44″	0.42″	7.89″				‡	Gray	33	3-1/2″
YA482NU ‡	2000 kcmil	1000	3/8″	3.10″	3.44″	0.46″	7.98″				‡	Brown	34	3-1/2″
YA444NU	1000 kcmil	500	3/8″	3.00″	3.00″	0.23″	7.14″				P44RT	White	27	3-1/16″
YA454NU	1250 kcmil	—	3/8″	3.00″	3.19″	0.30″	7.44″				P45RT	Yellow	29	3-1/4″
YA464NU	1500 kcmil	800	3/8″	3.00″	3.19″	0.34″	7.55″				P46RT	Green	31	3-1/4″

* Use PUADP-1 adaptor with U dies in Y46 HYPRESS™

** Minimum bolt hole size must be maintained for UL & CSA

*** The MM² conductor sizes listed are the recommendations for Class 2 conductor

‡ Requires Y60BHU HYPRESS™

Blue highlighted items are industry standard and most frequently ordered.

ONE HOLE HYLUG™ CODE CONDUCTOR STANDARD BARREL

TYPES YA-L, YA-L-TC

UNINSULATED COPPER COMPRESSION TERMINAL

UL Listed 90° C,
600 Volts to 35kV ♦

45° and 90° angles available. Please contact Customer Service to order : 1-800-346-4175.

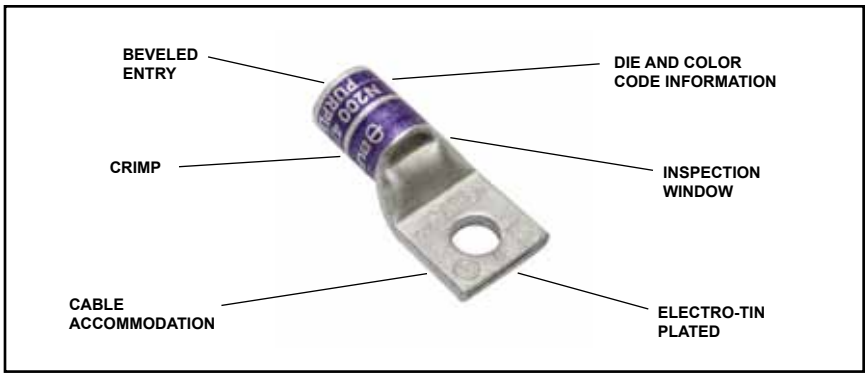

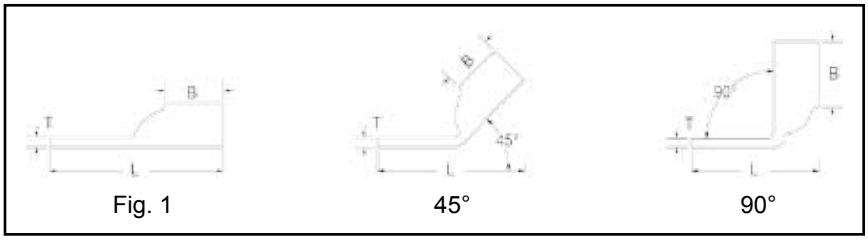

Catalog Number	Fig #	Conductor AWG	Conductor *** MM²	Stud Hole Size	Tongue Width	Figure Dimensions (B)	Figure Dimensions (T)	Figure Dimensions (L)	Installation Tooling: Dieless (# of crimps)	Installation Tooling: Mechanical MD6, OUR840, MD7-34R	Installation Tooling: Hydraulic BCT500HS, Y500CTHS	Installation Tooling: Hydraulic Y35, Y39 Y750, Y46* PAT750	Installation Tooling: Color Code	Installation Tooling: Die Index	Wire Strip Length
YAV10BOX	1	#14-#10 Str #12-#10 Sol	6	#8 - #10	0.38″	0.40″	0.06″	0.97″	Non-Ratchet: Y10D, Y10-22 Ratchet: MR8G98, MR8-9Q, Y8MRB-1, MR20, N10HT, N10HT-24	—	—	—	—	—	7/16″
YAV10R-BOX	3			#8 - #10	0.38″	0.38″	0.06″	0.53″							3/8″
YAV10-T2BOX	1			1/4″	0.53″	0.39″	0.04″	1.13″							7/16″
YAV10-R3BOX	3	#10-#12		1/4″	0.47″	0.38″	0.05″	0.55″							5/16″
YAV10-T3BOX	1	#14-#10 Str #12-#10 Sol		5/16″	0.45″	0.41″	0.05″	1.10″							7/16″
YAV10-T4BOX				3/8″	0.55″	0.45″	0.04″	1.17″							
YA8CL-BOX	1	#8 AWG #8 Weld 37/24 #6 sol. #8 sol.	† 10	#8 - #10	0.41″	0.44″	0.08″	1.16″	Y1MRTC (1) MY29-3 (1) MY29-11 (1) MRC840 (1) Y4PC834 (1) Y8MRB-1 (1) Y81KFT (1) PAT81KFT (1)	W8CVT (1) W8CRT (1) X8CRT (1)	W8CVT (1) W8CRT (1) X8CRT (1)	U8CRT (1)	Red	49	7/16″
YA8CL1-BOX				1/4″	0.44″	0.44″	0.08″	1.26″							
YA8CL2-BOX				5/16″	0.52″	0.44″	0.06″	1.38″							
YA8CL3-BOX				3/8″	0.58″	0.44″	0.06″	1.51″							
YA8CL4-BOX				1/2″	0.71″	0.44″	0.05″	1.76″							
YA6CL1-BOX	1	#6 AWG	—	#8 - #10	0.41″	0.54″	0.09″	1.27″	Y1MRTC (1) MY29-3 (1) MY29-11 (1) MRC840 (1) Y81KFT (1) Y81KFTBMH (1) PAT81KFT-18V (1)	W5CVT (1) W5CRT (1) X5CRT (1) X8CART (1)	W5CVT (1) W5CRT (1) X5CRT (1) X8CART (1)	U5CRT (1) U8CABT (1)	Blue	7 or 374	9/16″
YA6CL-BOX				1/4″	0.45″	0.54″	0.08″	1.45″							
YA6CL3-BOX				5/16″	0.52″	0.54″	0.07″	1.52″							
YA6CL4-BOX				3/8″	0.63″	0.54″	0.06″	1.62″							
YA6CL-6				1/2″	0.75″	0.54″	0.12″	1.87″							
YA5CL	1	#5 AWG		1/4″	0.44″	0.81″	0.07″	1.65″		W5CRT (1) W5CVT (1) X5CRT (1)	W5CRT (1) X5CRT (1) W5CVT (1)				

* Use PUADP-1 adapter with U dies in Y46 HYPRESS™
** P-RT die sets for use in Y46 HYPRESS™ only, PUADP-1 adapter not required
*** The MM² conductor sizes listed are the recommendations for Class 2 conductor
† The MM² conductor size listed is for both Class 2 and Class 5 conductor
▲ See tooling section of this catalog for complete tool and die listings
♦ For applications greater than 2000 Volts consult cable manufacturer for voltage stress relief instructions
Note: All dimensions shown are for reference only.

Blue highlighted items are industry standard and most frequently ordered.

ONE HOLE HYLUG™ CODE CONDUCTOR STANDARD BARREL (Continued)

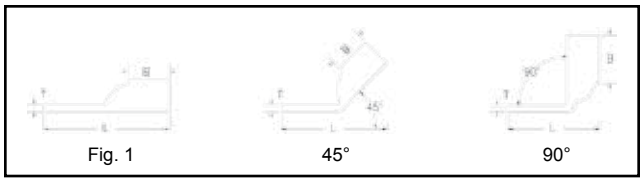

45° and 90° angles available. Please contact Customer Service to order: 1-800-346-4175.

Catalog Number	Fig #	Conductor AWG	Conductor *** MM²	Stud Hole Size	Tongue Width	Figure Dimensions (B)	Figure Dimensions (T)	Figure Dimensions (L)	Installation Tooling: Dieless (# of crimps)	Installation Tooling: Mechanical MD6, OUR840, MD7-34R	Installation Tooling: Hydraulic BCT500HS, Y500CTHS	Installation Tooling: Hydraulic Y35, Y39 Y750, Y46* PAT750	Color Code	Die Index	Wire Strip Length
YA4CL1-BOX	1	#4 AWG	—	#8 - #10	0.50″	0.81″	0.09″	1.58″	Y1MRTC (2) MY29-3 (1) MY29-11 (1) MRC840 (1) Y644HSXT (1) Y81KFT (1) Y81KFTMBH (1) PAT81KFT-18V (1)	W4CVT (1) W4CRT (1) X4CRT (1)	W4CVT (1) W4CRT (1) X4CRT (1)	U4CRT (1) U6CABT (1)	Gray	8	7/8″
YA4CL-BOX				1/4″	0.50″	0.81″	0.09″	1.74″							
YA4CL3-BOX				5/16″	0.50″	0.81″	0.08″	1.79″							
YA4CL4-BOX				3/8″	0.58″	0.81″	0.09″	1.92″							
YA4CL6-BOX				1/2″	0.71″	0.81″	0.06″	2.20″							
YA3CL	1	#3 Str #2 Sol	25	5/16″	0.55″	0.88″	0.09″	1.88″		W3CRT (1)	W3CRT (1)	U3CRT (1)	White	9	15/16″
YA2CL2-BOX	1	#2 AWG	35	1/4″	0.61″	0.88″	0.11″	1.88″		W2CVT (1) W2CRT (1) X2CRT (1)	W2CVT (1) W2CRT (1) X2CRT (1)	U2CRT (1)	Brown	10	15/16″
YA2CL-BOX				5/16″	0.61″	0.88″	0.11″	1.93″							
YA2CL4-BOX				3/8″	0.61″	0.88″	0.11″	2.06″							
YA2CL6-BOX				1/2″	0.73″	0.88″	0.09″	2.32″							
YA1CL2	1	#1 AWG	50	1/4″	0.68″	0.88″	0.10″	1.81″		W1CVT (1) W1CRT-1 (1) X1CRT-1 (1)	W1CVT (1) W1CRT-1 (1) X1CRT-1 (1)	U1CRT-1 (1) U4CABT (1)	Green	11 or 375	15/16″
YA1CL-BOX				5/16″	0.68″	0.88″	0.10″	1.94″							
YA1CL4-BOX				3/8″	0.68″	0.88″	0.10″	2.06″							
YA1CL6-BOX				1/2″	0.73″	0.88″	0.09″	2.37″							
YA25L2-BOX	1	1/0 AWG	—	1/4″	0.75″	0.88″	0.12″	1.84″	MY29-3 (1) MY29-11 (1) MRC840 (2) Y644HSXT (1) Y81KFT (1) Y81KFTMBH (1) PAT81KFT-18V (1)	W25VT (2) W25RT (2) X25RT (2)	W25VT (2) W25RT (2) X25RT (2)	U25RT (1) U2CABT (1)	Pink	12	15/16″
YA25L-BOX				5/16″	0.75″	0.88″	0.12″	1.96″							
YA25L4-BOX				3/8″	0.75″	0.88″	0.12″	2.09″							
YA25L6-BOX				1/2″	0.75″	0.88″	0.12″	2.34″							
YA26L2-BOX	1	2/0 AWG	70	1/4″	0.83″	0.94″	0.12″	1.94″		W26VT (2) W26RT (2) X26RT (2)	W26VT (2) W26RT (2) X26RT (2)	U26RT (1)	Black	13	1″
YA26L-BOX				3/8″	0.83″	0.94″	0.12″	2.19″							
YA26L6-BOX				1/2″	0.83″	0.94″	0.12″	2.44″							
YA26L60				3/4″	1.02″	0.94″	0.10″	2.96″							
YA27L3	1	3/0 AWG	—	5/16″	0.91″	1.00″	0.13″	2.16″	MY29-3 (1) MY29-11 (1) MRC840 (2) Y644HSXT (1) Y81KFT (2) Y81KFTMBH (2) PAT81KFT-18V (2)	W27VT (2) W27RT (2) X27RT (3)	W27VT (2) W27RT (2) X27RT (3)	U27RT (1)	Orange	14	1-1/16″
YA27L4-BOX				3/8″	0.91″	1.00″	0.13″	2.29″							
YA27L-BOX				1/2″	0.91″	1.00″	0.13″	2.54″							

* Use PUADP-1 adapter with U dies in Y46 HYPRESS™

** P-RT die sets for use in Y46 HYPRESS™ only, PUADP-1 adapter not required

*** The MM² conductor sizes listed are the recommendations for Class 2 conductor

† The MM² conductor size listed is for both Class 2 and Class 5 conductor

▲ See tooling section of this catalog for complete tool and die listings

♦ For applications greater than 2000 Volts consult cable manufacturer for voltage stress relief instructions

Note: All dimensions shown are for reference only.

Blue highlighted items are industry standard and most frequently ordered.

ONE HOLE HYLUG™ CODE CONDUCTOR STANDARD BARREL (Continued)

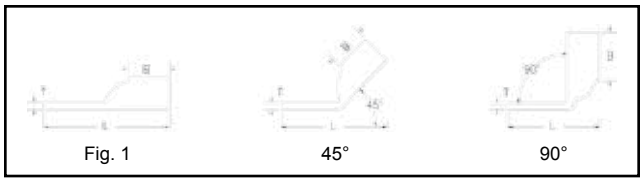

45° and 90° angles available. Please contact Customer Service to order: 1-800-346-4175.

Catalog Number	Fig #	Conductor AWG	Conductor *** MM²	Stud Hole Size	Tongue Width	Figure Dimensions (B)	Figure Dimensions (T)	Figure Dimensions (L)	Installation Tooling: Dieless (# of crimps)	Installation Tooling: Mechanical MD6, OUR840, MD7-34R	Installation Tooling: Hydraulic BCT500HS, Y500CTHS	Installation Tooling: Hydraulic Y35, Y39 Y750, Y46* PAT750	Color Code	Die Index	Wire Strip Length
YA28L2	1	4/0 AWG	—	1/4″	1.02″	0.88″	0.14″	1.96″	MY29-3 (1) MY29-11 (1) MRC840 (2) Y644HSXT (1) Y81KFT (2) Y81KFTMBH (2) PAT81KFT-18V (2)	W28VT (2) W28RT (2) X28RT (3)	W28VT (2) W28RT (2) X28RT (3)	U28RT (1)	Purple	15	1-1/8″
YA28L3				5/16″	1.02″	0.88″	0.14″	2.08″							
YA28L4-BOX				3/8″	1.02″	0.88″	0.14″	2.21″							
YA28L-BOX				1/2″	1.02″	0.88″	0.14″	2.46″							
YA28L56				3/4″	1.05″	0.88″	0.13″	2.90″							
YA29L2	1	250 kcmil	—	1/4″	1.11″	1.06″	0.16″	2.17″	MY29-3 (1) MY29-11 (1) Y644HSXT (1) Y81KFT (2) Y81KFTMBH (2) PAT81KFT-18V (2)	W29VT (2) X29RT (4)	W29VT (2) W29RT (2) X29RT (4)	U29RT (1)	Yellow	16	1-1/8″
YA29L7				5/16″	1.11″	1.06″	0.16″	2.30″							
YA29L4				3/8″	1.11″	1.06″	0.16″	2.42″							
YA29L-BOX				1/2″	1.11″	1.06″	0.16″	2.67″							
YA29LTC78				7/8″	1.11″	1.06″	0.14″	3.36″							
YA30L1	1	300 kcmil	150	5/16″	1.20″	1.03″	0.16″	2.31″	Y644HSXT (1) Y81KFT (2) Y81KFTMBH (2) PAT81KFT-18V (2)	W30VT (2)	W30VT (2) W30RT (2)	U30RT (2) U28ART (2)	White	17	1-1/16″
YA30L24				3/8″	1.20″	1.03″	0.16″	2.44″							
YA30L				1/2″	1.20″	1.03″	0.16″	2.69″							
YA30LN				1/2″	1.20″	1.03″	0.16″	2.87″							1″
YA30L7				5/8″	1.20″	1.03″	0.16″	2.94″							1-1/16″
YA30L28				3/4″	1.20″	1.03″	0.16″	3.12″							
YA30L27				7/8″	1.20″	1.03″	0.16″	3.37″							
YA31L11	1	350 kcmil	185	3/8″	1.29″	1.06″	0.18″	2.50″		W31VT (2)	W31VT (2) W31RT (2)	U31RT (2) U29ART (2)	Red	18	1-1/8″
YA31L				1/2″	1.29″	1.06″	0.18″	2.75″							
YA31L7				5/8″	1.29″	1.06″	0.18″	3.00″							
YA31L36				7/8″	1.29″	1.06″	0.18″	4.02″							
YA32L14	1	400 kcmil	—	3/8″	1.40″	1.19″	0.19″	2.68″		W32VT (2)	W32VT (2) W32RT (2)	U32RT (2) U30ART (2)	Blue	19	1-1/4″
YA32LN				1/2″	1.40″	1.19″	0.19″	3.12″							
YA32L1				1/2″	1.40″	1.19″	0.19″	2.93″							
YA32L				5/8″	1.40″	1.19″	0.19″	3.18″							
YA32LTC78				7/8″	1.40″	1.19″	0.19″	3.62″							
YA33L	1	450 kcmil	—	5/8″	1.48″	1.50″	0.21″	3.57″		W33VT (2)	W33VT (2) W33RT (2)	U33RT (2)	Gray	326	1-9/16″
YA34L37	1	500 kcmil	240	3/8″	1.55″	1.27″	0.23″	2.87″	Y644HSXT (1) Y81KFT (2) Y81KFTMBH (2) PAT81KFT-18V (2)	W34VT (2)	W34VT (2) W34RT (2)	U34RT (2) U31ART (1)	Brown	20	1-7/16″
YA34L6				1/2″	1.55″	1.27″	0.23″	3.12″							
YA34L				5/8″	1.55″	1.27″	0.23″	3.37″							
YA34L8				3/4″	1.55″	1.27″	0.23″	3.55″							
YA34L9				7/8″	1.55″	1.27″	0.23″	3.80″							
YA34L20				1″	1.55″	1.27″	0.23″	4.05″							
YA35L	1	550 kcmil	—	5/8″	1.65″	1.69″	0.25″	3.81″		—	—	U35RT (2)	Yellow	21	1-3/4″
YA36L11	1	600 kcmil	300	1/2″	1.74″	1.38″	0.27″	3.29″		—	—	U36RT (2) U32ART (2)	Green	22 or 472	1-3/4″
YA36L				5/8″	1.74″	1.38″	0.27″	3.54″		—	—				
YA36LTC78				7/8″	1.74″	1.38″	0.27″	3.97″		—	—				

* Use PUADP-1 adapter with U dies in Y46 HYPRESS™
** P-RT die sets for use in Y46 HYPRESS™ only, PUADP-1 adapter not required
*** The MM² conductor sizes listed are the recommendations for Class 2 conductor
† The MM² conductor size listed is for both Class 2 and Class 5 conductor
▲ See tooling section of this catalog for complete tool and die listings
♦ For applications greater than 2000 Volts consult cable manufacturer for voltage stress relief instructions
Note: All dimensions shown are for reference only.

Blue highlighted items are industry standard and most frequently ordered.

ONE HOLE HYLUG™ CODE CONDUCTOR STANDARD BARREL (Continued)

45° and 90° angles available. Please contact Customer Service to order: 1-800-346-4175.

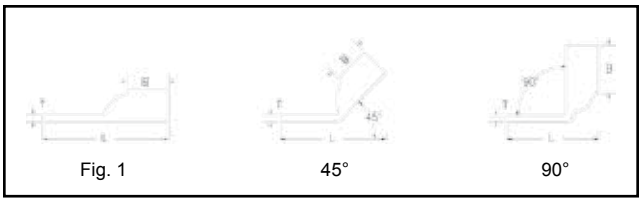

Catalog Number	Fig #	Conductor AWG	Conductor *** MM²	Stud Hole Size	Tongue Width	Figure Dimensions (B)	Figure Dimensions (T)	Figure Dimensions (L)	Installation Tooling: Dieless (# of crimps)	Installation Tooling: Mechanical MD6, OUR840, MD7-34R	Installation Tooling: Hydraulic BCT500HS, Y500CTHS	Installation Tooling: Hydraulic Y35, Y39 Y750, Y46* PAT750	Color Code	Die Index	Wire Strip Length
YA37L	1	650 kcmil	—	5/8″	1.80″	1.39″	0.27″	3.57″	Y644HSXT (1) Y81KFT (3) Y81KFTMBH (3) PAT81KFT-18V (3)	—	—	U37RT (2)	Orange	23	1-15/16″
YA37L1			—	5/8″	1.80″	1.39″	0.27″	3.76″							
YA38L	1	700 kcmil	—	5/8″	1.84″	1.45″	0.27″	3.66″		—	—	U38RT (2)	Pink	400	1-15/16″
YA39L6	1	750 kcmil	—	1/2″	1.91″	1.42″	0.27″	3.41″		—	—	U39RT (2) P39RT (2)**	Black	24	1-15/16″
YA39L			—	5/8″	1.91″	1.42″	0.27″	3.57″							
YA39L2			—	7/8″	1.91″	1.42″	0.27″	4.10″							
YA39L9			—	1-1/4″	1.91″	1.42″	0.27″	4.85″							
YA40L	1	800 kcmil	400	5/8″	1.98″	1.42″	0.30″	3.81″	Y644HSXT (1) Y81KFT (3) Y81KFTMBH (3) PAT81KFT-18V (3) Y644HSXTBH (1) PAT644XT-18V (1)	—	—	P40RT (3) **	Orange	25	1-15/16″
YA41L	1	850 kcmil	—	5/8″	2.01″	1.88″	0.31″	4.15″		—	—	—	Gold	26	1-15/16″
YA44L2	1	1000 kcmil	500	1/2″	2.19″	1.65″	0.33″	3.98″		—	—	P44RT (3) **	White	27	1-15/16″
YA44L				5/8″	2.19″	1.65″	0.33″	4.04″							
YA44L23				1″	2.19″	1.65″	0.33″	4.73″							
YA45L	1	1250 kcmil	630	3/4″	2.46″	2.00″	0.38″	4.68″	—	—	—	P45RT (3) **	Yellow	29	2-1/16″
YA453L	1	1300 kcmil	—	3/4″	2.53″	2.00″	0.39″	4.71″	—	—	—	—	Orange	30	2-1/16″
YA46L	1	1500 kcmil	800	3/4″	2.69″	2.00″	0.40″	4.78″	—	—	—	P46RT (3) **	Green	31	2-1/16″
YA48L	1	2000 kcmil	1000	3/4″	3.10″	2.25″	0.46″	5.19″	—	—	—	—	Brown	34	2-3/8″

* Use PUADP-1 adapter with U dies in Y46 HYPRESS™

** P-RT die sets for use in Y46 HYPRESS™ only, PUADP-1 adapter not required

*** The MM² conductor sizes listed are the recommendations for Class 2 conductor

*** The MM² conductor sizes listed are the recommendations for Class 2 conductor.

▲ See tooling section of this catalog for complete tool and die listings.

♦ For applications greater than 2000 Volts consult cable manufacturer for voltage stress relief instructions.

Note: All dimensions shown are for reference only.

Blue highlighted items are industry standard and most frequently ordered.

ONE HOLE HYLUG™ CODE CONDUCTOR STANDARD BARREL NARROW TONGUE

TYPE YA-L-NT

UNINSULATED COPPER COMPRESSION NARROW TONGUE TERMINAL

UL Listed 90° C,
600 Volts to 35 kV ♦

45° and 90° angles available. Please contact Customer Service to order: 1-800-346-4175

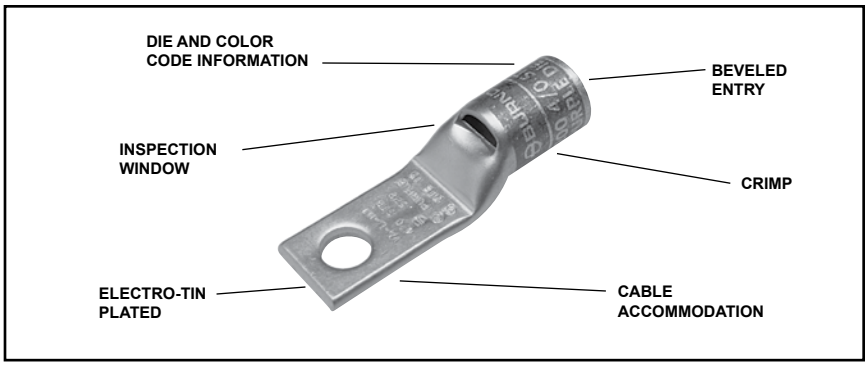

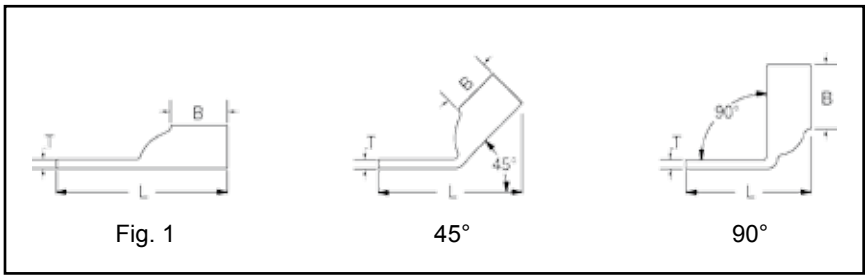

Fig. 1 45° 90°

Catalog Number	Fig #	Conductor AWG	Conductor *** MM²	Stud Hole Size	Tongue Width	Figure Dimensions (B)	(T)	(L)	▲ Installation Tooling (# of crimps) **** Dieless	Mechanical MD6, OUR840, MD7-34R	Hydraulic BCT500HS, Y500CTHS	Hydraulic Y35, Y39 Y750, Y46* PAT750	Color Code	Die Index	Wire Strip Length
YA8CLNT6	1	#8 AWG #8 Weld 37/24 #8 Sol #6 Sol	** 10	#6	0.29″	0.44″	0.09″	1.08″	Y1MRTC (1) Y8MRB-1 (1) MY29-3 (1) MY29-11 (1) MRC840 (1) Y81KFT (1) Y81KFTMBH (1) PAT81KFT-18V (1)	W8CVT (1)	X8CRT (1)	U8CRT (1)	Red	49	1/2″
YA8CLNT8				#8	0.33″	0.44″	0.09″	1.18″							
YA6CLNT6	1	#6 AWG	—	#6	0.29″	0.54″	0.09″	1.17″	Y1MRTC (1) MY29-3 (1) MY29-11 (1) MRC840 Y644HSXT (1) Y81KFT (1) Y81KFTMBH (1) PAT81KFT-18V (1)	W5CVT (1)	X5CRT (1)	U5CRT (1)	Blue	7	7/8″
YA4CLNT10	1	#4 AWG	—	#10	0.40″	0.81″	0.09″	1.73″		W4CVT (1)	X4CRT (1)	U4CRT (1)	Gray	8	7/8″
YA3CLNT14	1	#3 AWG #2 Sol.	25	1/4″	0.41″	0.88″	0.08″	1.82″		W3CVT (1)	W3CVT (1)	U3CRT (1)	White	9	15/16″
YA3CLNT516				5/16″	0.49″	0.88″	0.08″	1.80″							
YA2CLNT10	1	#2 AWG	35	#10	0.48″	0.88″	0.11″	1.80″		W2CVT (1)	X2CRT (1)	U2CRT (1)	Brown	10	15/16″
YA2CLNT14				1/4″	0.50″	0.88″	0.11″	1.80″							
YA2CLNT516				5/16″	0.49″	0.88″	0.11″	1.82″							
YA1CLNT10	1	#1 AWG	50	#10	0.50″	0.88″	0.10″	2.23″		W1CVT (1)	X1CRT-1 (1)	U1CRT-1 (1)	Green	11	15/16″
YA1CLNT14				1/4″	0.50″	0.88″	0.10″	2.23″							
YA25LNT10	1	1/0 AWG	—	#10	0.62″	0.88″	0.12″	2.28″	MY29-3 (1) MY29-11 (1) MRC840 Y644HSXT (1) Y81KFT (1) Y81KFTMBH (1) PAT81KFT-18V (1)	W25VT (2)	X25RT (2)	U25RT (1)	Pink	12	15/16″
YA25LNT14				1/4″	0.48″	0.88″	0.12″	1.93″							
YA25LNT516				5/16″	0.62″	0.88″	0.12″	2.28″							
YA25LNT38				3/8″	0.62″	0.88″	0.12″	2.18″							
YA26LNT10	1	2/0 AWG	70	#10	0.62″	0.94″	0.13″	2.62″		W26VT (2)	X26RT (2)	U26RT (1)	Black	13	1″
YA26LNT14				1/4″	0.48″	0.94″	0.12″	2.02″							
YA26LNT516				5/16″	0.62″	0.94″	0.13″	2.62″							
YA26LNT38				3/8″	0.72″	0.94″	0.12″	2.48″							

* Use PUADP-1 adapter with U dies in Y46 HYPRESS™

** The MM² conductor size listed is for Class 2 and Class 5 conductor

*** The MM² conductor sizes listed are the recommendations for Class 2 conductor

**** Y644HSXT is not recommended for standard barrel length #6 AWG HYLUG™

▲ See tooling section of this catalog for complete tool and die listings. Use ONLY color-coded die recommendations for FX connectors. For nest/indentor system contact factory

♦ For applications greater than 2000 Volts consult cable manufacturer for voltage stress relief instructions

Note: All dimensions shown are for reference only.

Blue highlighted items are industry standard and most frequently ordered.

ONE HOLE HYLUG™ CODE CONDUCTOR STANDARD BARREL NARROW TONGUE (Continued)

45° and 90° angles available. Please contact Customer Service to order: 1-800-346-4175

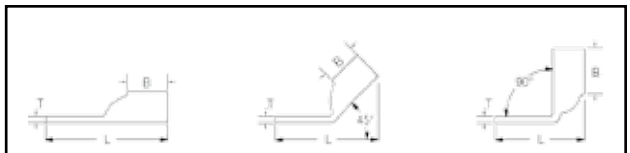

Fig. 1 45° 90°

Catalog Number	Fig #	Conductor AWG	Conductor *** MM²	Stud Hole Size	Tongue Width	Figure Dimensions (B)	Figure Dimensions (T)	Figure Dimensions (L)	▲ Installation Tooling (# of crimps) **** Dieless	Mechanical MD6, OUR840, MD7-34R	Hydraulic BCT500HS, Y500CTHS	Hydraulic Y35, Y39 Y750, Y46* PAT750	Color Code	Die Index	Wire Strip Length
YA27LNT14	1	3/0 AWG	—	1/4″	0.76″	1.00″	0.13″	2.10″	MY29-3 (1) MY29-11 (1) MRC840 (2) Y644HSXT (1) Y81KFT (2) Y81KFTMBH (2) PAT81KFT-18V (2)	W27VT (2)	X27RT (3)	U27RT (1)	Orange	14	1-1/16″
YA27LNT516				5/16″	0.60″	1.00″	0.12″	2.17″							
YA27LNT38				3/8″	0.76″	1.00″	0.12″	2.73″							
YA28LNT14	1	4/0 AWG	—	1/4″	0.76″	0.88″	0.14″	2.60″		W28VT (2)	X28RT (3)	U28RT (1)	Purple	15	1-1/8″
YA28LNT516				5/16″	0.70″	0.88″	0.14″	2.09″							
YA28LNT38				3/8″	0.76″	0.88″	0.14″	2.67″		W28VT (2) W28RT (2) X28RT (3)	X28RT (3)	U28RT (1)	Purple	15	1-1/16″
YA29LENT516	1	250 kcmil	—	5/16″	0.76″	1.06″	0.16″	2.49″		W29VT (2)	X29RT (4)	U29RT (1)	Yellow	16	1-1/8″
YA29LENT38				3/8″	0.76″	1.06″	0.16″	2.96″							
YA29LNT38				3/8″	0.96″	1.06″	0.16″	2.96″							
YA30LNT14	1	300 kcmil	150	1/4″	0.83″	1.03″	0.16″	2.26″	Y644HSXT (1) Y81KFT (2) Y81KFTMBH (2) PAT81KFT-18V (2)	W30VT (4)	—	U30RT (2)	White	17	1-1/8″
YA30LNT38				3/8″	0.96″	1.03″	0.16″	2.97″			—				
YA31LNT38	1	350 kcmil	185	3/8″	0.96″	1.06″	0.18″	3.31″		W31VT (4)	—	U31RT (2)	Red	18	1-1/8″
YA31LNT12				1/2″	0.88″	1.06″	0.18″	2.75″			—				1-3/16″
YA32LNT38	1	400 kcmil	—	3/8″	0.96″	1.19″	0.20″	3.21″		W32VT (4)	—	U32RT (2)	Blue	19	1-1/4″
YA32LNT12				1/2″	0.96″	1.19″	0.19″	3.21″			—				
YA34LNT38	1	500 kcmil	240	3/8″	0.96″	1.27″	0.23″	3.65″		W34VT (4)	—	U34RT (2)	Brown	20	1-7/16″
YA34LNT12				1/2″	0.96″	1.27″	0.23″	3.65″			—				
YA36LNT38	1	600 kcmil	300	3/8″	1.12″	1.38″	0.27″	4.09″		—	—	U36RT (2)	Green	22	1-3/4″
YA36LNT12				1/2″	1.00″	1.38″	0.27″	3.29″		—	—				
YA39LNT38	1	750 kcmil	—	3/8″	1.12″	1.42″	0.27″	4.24″	Y81KFT (3) Y81KFTMBH (3) PAT81KFT-18V (3)	—	—	U39RT (2)	Black	24	1-15/16″
YA39LNT12				1/2″	1.12″	1.42″	0.27″	4.24″		—	—				
YA39LNT58				5/8″	1.30″	1.42″	0.27″	3.67″		—	—				

* Use PUADP-1 adapter with U dies in Y46 HYPRESS™

** The MM² conductor size listed is for Class 2 and Class 5 conductor

*** The MM² conductor sizes listed are the recommendations for Class 2 conductor

**** Y644HSXT is not recommended for standard barrel length #6 AWG HYLUG™

▲ See tooling section of this catalog for complete tool and die listings. Use ONLY color-coded die recommendations for FX connectors. For nest/indentor system contact factory

♦ For applications greater than 2000 Volts consult cable manufacturer for voltage stress relief instructions

Note: All dimensions shown are for reference only.

Blue highlighted items are industry standard and most frequently ordered.

ONE HOLE HYLUG™ CODE CONDUCTOR LONG BARREL

TYPES YA, YA-TC

UNINSULATED COPPER COMPRESSION TERMINAL

UL Listed 90° C,
600 Volts to 35kV ♦

45° and 90° angles are available.
Please contact Customer Service to order: 1-800-346-4175

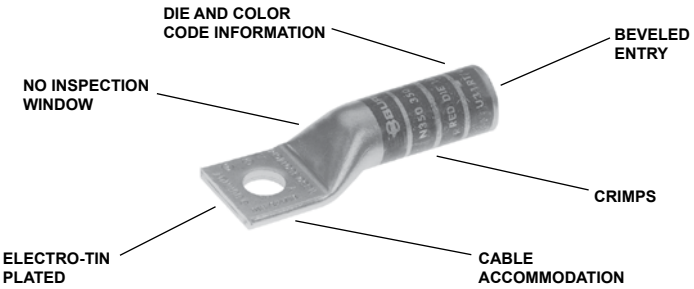

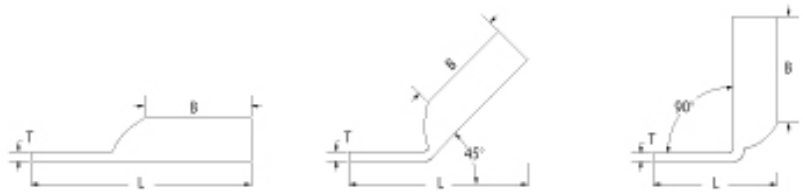

Fig. 1 45° 90°

Catalog Number	Fig #	Conductor AWG	Conductor *** MM²	Stud Hole Size	Tongue Width	Figure Dimensions (B)	(T)	(L)	Installation Tooling: Dieless (# of crimps)	Mechanical: MD6, OUR840, MD7-34R	Hydraulic: BCT500HS, Y500CTHS	Hydraulic: Y35, Y39 Y750, Y46* PAT750	Color Code	Die Index	Wire Strip Length
YA8CTC10	1	#8 AWG #8 Weld 37/24 #6 Sol #8 Sol	† 10	#10	0.41″	0.81″	0.08″	1.57″	MRC840 (2) MY29-3 (2) MY29-11 (2) Y8MBR-1 (1) Y1MRTC (2) Y81KFT (1) Y81KFTMBH (1) PAT81KFT-18V (1)	W8CVT (2) W8CRT (2) X8CRT (2)	W8CVT (2) W8CRT (2) X8CRT (2)	U8CRT (2)	Red	49	7/8″
YA8CTC14				1/4″	0.44″	0.81″	0.08″	1.69″							
YA8CTC38				3/8″	0.58″	0.81″	0.06″	1.88″							
YA6CTC8	1	#6 AWG	—	#8	0.42″	1.12″	0.09″	1.83″	Y1MRTC (2) MRC840 (2) MY29-3 (2) MY29-11 (2) Y644HSXT (1) Y81KFT (1) Y81KFTMBH (1) PAT81KFT-18V (1)	W5CVT (2) W5CRT (2) X5CRT (2) X8CART (2)	W5CVT (2) W5CRT (2) X5CRT (2) X8CART (2)	U5CRT (2) U8CABT (2)	Blue	7 or 374	1-3/16″
YA6CTC10				#10	0.42″	1.12″	0.09″	1.89″							
YA6C				1/4″	0.41″	1.12″	0.09″	1.81″							
YA6CN				1/2″	0.83″	1.12″	0.12″	2.64″							
YA6CTC516				5/16″	0.52″	1.12″	0.07″	2.08″							
YA6CTC38				3/8″	0.58″	1.12″	0.06″	2.21″							
YA5C	1	#5 AWG	—	1/4″	0.44″	1.12″	0.07″	1.98″		W5CVT (2) W5CRT (2) X5CRT (2)	W5CVT (2) W5CRT (2) X5CRT (2)	U5CRT (2)	Blue	7 or 374	1-3/16″
YA5CN				1/2″	0.83″	1.12″	0.12″	2.67″							
YA4CTC10	1	#4 AWG	—	#10	0.50″	1.12″	0.09″	1.94″		W4CVT (2) W4CRT (2) X4CRT (2)	W4CVT (2) W4CRT (2) X4CRT (2)	U4CRT (2) U6CABT (2)	Gray	8 or 346	1-3/16″
YA4C				1/4″	0.50″	1.12″	0.09″	1.87″							

* Use PUADP-1 adapter with U dies in Y46 HYPRESS™

** P-RT die sets for use in Y46 HYPRESS™ only, PUADP-1 adapter not required

*** The MM² conductor sizes listed are the recommendations for Class 2 conductor

† The MM² conductor size listed is for Class 2 and Class 5 conductor

▲ See tooling section of this catalog for complete tool and die listings. Use ONLY color coded die recommendations for -FX connectors. For nest/indentor system contact factory

• Available undrilled. Add suffix U to catalog number (example: YA25U)

♦ For applications greater than 2000 Volts consult cable manufacturer for voltage stress relief instructions

Note: All dimensions shown are for reference only

Blue highlighted items are industry standard and most frequently ordered.

ONE HOLE HYLUG™ CODE CONDUCTOR LONG BARREL (Continued)

UL Listed 90° C,
600 Volts to 35kV ♦

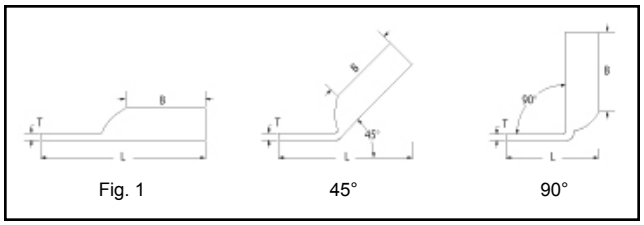

Fig. 1 45° 90°

45° and 90° angles are available. Please contact Customer Service to order:
1-800-346-4175

Catalog Number	Fig #	Conductor AWG	Conductor *** MM²	Stud Hole Size	Tongue Width	Figure Dimensions (B)	Figure Dimensions (T)	Figure Dimensions (L)	Installation Tooling: Dieless (# of crimps)	Installation Tooling: Mechanical MD6, OUR840, MD7-34R	Installation Tooling: Hydraulic BCT500HS, Y500CTHS	Installation Tooling: Hydraulic Y35, Y39 Y750, Y46* PAT750	Installation Tooling: Color Code	Installation Tooling: Die Index	Wire Strip Length
YA4CTC38	1	#4 AWG	—	3/8"	0.58"	1.12"	0.08"	2.25"	MRC840 (2) MY29-3 (2) MY29-11 (2) Y644HSXT (1) Y1MRTC (4) Y81KFT (1) Y81KFTMBH (1) PAT81KFT-18V (1)	W4CVT (2) W4CRT (2) X4CRT (2)	W4CVT (2) W4CRT (2) X4CRT (2)	U4CRT (2) U6CABT (2)	Gray	8 or 346	1-3/16"
YA4CN				1/2"	0.83"	1.12"	0.12"	2.69"							
YA3CTC14	1	#3 AWG #2 Solid	25	1/4"	0.55"	1.25"	0.09"	2.23"	Y1MRTC (4) MRC840 (2) MY29-3 (2) MY29-11 (2) Y644HSXT (1) Y81KFT (2) Y81KFTMBH (2)	W3CRT (2)	W3CRT (2)	U3CRT (2)	White	9	1-5/16"
YA3C				5/16"	0.55"	1.25"	0.09"	2.30"							
YA3CTC38				3/8"	0.58"	1.25"	0.08"	2.42"							
YA3CN				1/2"	0.83"	1.25"	0.12"	2.86"							
YA2CTC10	1	#2 AWG	35	#10	0.60"	1.25″	0.11"	2.10"		W2CVT (2) W2CRT (2) X2CRT (2)	W2CVT (2) W2CRT (2) X2CRT (2)	U2CRT (2)	Brown	10	1-5/16"
YA2CTC14				1/4"	0.60"	1.25″	0.11"	2.23"							
YA2C				5/16"	0.60"	1.25"	0.11"	2.29"							
YA2CTC38				3/8"	0.60	1.25	0.11	2.41							
YA2CN				1/2"	0.83"	1.25″	0.12"	2.88"							
YA1CTC10	1	#1 AWG	50	#10	0.68"	1.38"	0.10"	2.27"	PAT81KFT-18V (2) Y1MR (4) MRC840 (2) MY29-3 (2) MY29-11 (2) Y644HSXT (1) Y81KFT (2) Y81KFTMBH (2)	W1CVT (2) W1CRT-1 (2) X1CRT-1 (2)	W1CVT (2) W1CRT-1 (2) X1CRT-1 (2)	U1CRT-1 (2) U4CABT (2)	Green	11	1-7/16"
YA1CTC14			—	1/4	0.68	1.38	0.10	2.39							
YA1C			50	5/16"	0.68"	1.38"	0.10"	2.45"							
YA1CTC38			—	3/8	0.68	1.38	0.10	2.58							
YA1CN				1/2"	0.83"	1.38"	0.12"	3.06"	PAT81KFT-18V (2) Y1MR (4) MRC840 (2) MY29-3 (2) MY29-11 (2) Y644HSXT (1) Y81KFT (2)						
YA25TC10	1	1/0 AWG	—	#10	0.75"	1.38"	0.12"	2.30"	MRC840 (4) MY29-3 (2) MY29-11 (2) Y644HSXT (1) Y81KFT (2) Y81KFTMBH (2) PAT81KFT-18V (2)	W25VT (4) W25RT (4) X25RT (4)	W25VT (4) W25RT (4) X25RT (4)	U25RT (2) U2CABT (2)	Pink	12	1-7/16"
YA25				5/16"	0.75"	1.38"	0.13"	2.48"							
YA25TC38				3/8"	0.75"	1.38"	0.12"	2.61"							
YA25N				1/2"	0.83"	1.38"	0.11"	3.05"							

* Use PUADP-1 adapter with U dies in Y46 HYPRESS™
** P-RT die sets for use in Y46 HYPRESS™ only, PUADP-1 adapter not required
*** The MM² conductor sizes listed are the recommendations for Class 2 conductor

▲ See tooling section of this catalog for complete tool and die listings. Use ONLY color coded die recommendations for -FX connectors. For nest/indentor system contact factory

• Available undrilled. Add suffix U to catalog number (example: YA25U)
♦ For applications greater than 2000 Volts consult cable manufacturer for voltage stress relief instructions
Note: All dimensions shown are for reference only

Blue highlighted items are industry standard and most frequently ordered.

ONE HOLE HYLUG™ CODE CONDUCTOR LONG BARREL (Continued)

UL Listed 90° C,
600 Volts to 35kV ♦

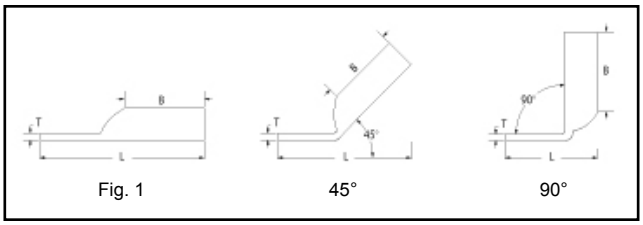

Fig. 1 45° 90°

45° and 90° angles are available. Please contact Customer Service to order:
1-800-346-4175

Catalog Number	Fig #	Conductor AWG	Conductor *** MM²	Stud Hole Size	Tongue Width	Figure Dimensions (B)	Figure Dimensions (T)	Figure Dimensions (L)	Installation Tooling: Dieless (# of crimps)	Installation Tooling: Mechanical MD6, OUR840, MD7-34R	Installation Tooling: Hydraulic BCT500HS, Y500CTHS	Installation Tooling: Hydraulic Y35, Y39 Y750, Y46* PAT750	Color Code	Die Index	Wire Strip Length
YA26TC14	1	2/0 AWG	70	1/4″	0.83	1.50	0.12	2.58	MRC840 (4) MY29-3 (2) MY29-11 (2) Y644HSXT (1) Y81KFT (2) Y81KFTMBH (2) PAT81KFT-18V (2)	W26VT (4) W26RT (4) X26RT (4)	W26VT (4) W26RT (4) X26RT (4)	U26RT (2)	Black	13	1-9/16"
YA26TC516				5/16″	0.83	1.50	0.12	2.65							
YA26				3/8"	0.83"	1.50"	0.12"	2.77"							
YA26N				1/2"	0.83"	1.50"	0.12"	3.21"							
YA27	1	3/0 AWG	—	1/2"	0.91"	1.50"	0.13"	3.06"		W27VT (4) W27RT (4) X27RT (6)	W27VT (4) W27RT (4) X27RT (6)	U27RT (2)	Orange	14	1-9/16"
YA28TC38	1	4/0 AWG	—	3/8"	1.02"	1.62"	0.14"	2.98"		W28VT (4) W28RT (4) X28RT (6)	W28VT (4) W28RT (4) X28RT (6)	U28RT (2)	Purple	15	1-9/16"
YA28				1/2"	1.02"	1.62"	0.14"	3.23"							
YA29	1	250 kcmil	—	1/2"	1.11"	1.62"	0.16"	3.26"	MY29-3 (2) MY29-11 (2) Y644HSXT (1) Y81KFT (2) Y81KFTMBH (2) PAT81KFT-18V (2)	W29VT (4) X29RT (8)	W29VT (4) W29RT (4) X29RT (8)	U29RT (2)	Yellow	16	1-11/16″
YA30	1	300 kcmil	150	1/2"	1.20"	2.00"	0.16"	3.69"	Y644HSXT (1) Y81KFT (3) Y81KFTMBH (3) PAT81KFT-18V (3)	W30VT (4)	W30VT (4) W30RT (4)	U30RT (4) U28ART (4)	White	17 or 298	2-1/16"
YA30N				1/2	1.20	2.00	0.16"	3.88							
YA31	1	350 kcmil	185	1/2"	1.29"	2.00"	0.18"	3.73"		W31VT (4)	W31VT (4) W31RT (4)	U31RT (4) U29ART (4)	Red	18 or 324	2-1/16"
YA32N	1	400 kcmil	—	1/2"	1.40"	2.12"	0.19"	4.09"		W32VT (4)	W32VT (4) W32RT (4)	U32RT (4) U30ART (4)	Blue	19 or 470	2-3/16"
YA32				5/8"	1.40"	2.12"	0.19"	4.15"							
YA33N	1	450 kcmil	—	1/2"	1.48"	2.13"	0.21"	4.17"	Y644HSXT (1) Y81KFT (4) Y81KFTMBH (4) PAT81KFT-18V (4)	W33VT (4)	W33VT (4) W33RT (4)	U33RT (4)	Gray	326 or 538	2-5/16"
YA33				5/8"	1.48"	2.13"	0.21"	4.24"							
YA34N	1	500 kcmil	240	1/2"	1.55"	2.25"	0.23"	4.32"		W34VT (4)	W34VT (4) W34RT (4)	U34RT (4) U31ART (2)	Brown	20 or 299	2-5/16"
YA34				5/8"	1.55"	2.25"	0.23"	4.39"							
YA35N	1	550 kcmil	—	1/2"	1.65"	2.63"	0.25"	4.73"		—	—	U35RT (4)	Yellow	21	2-11/16"
YA35				5/8"	1.65"	2.63"	0.25"	4.79"							
YA36N	1	600 kcmil	300	1/2"	1.74"	2.69"	0.27"	4.83"		—	—	U36RT (4) U32ART (4)	Green	22 or 472	2-3/4"
YA36				5/8"	1.74"	2.69"	0.27"	4.90"							

* Use PUADP-1 adapter with U dies in Y46 HYPRESS™
** P-RT die sets for use in Y46 HYPRESS™ only, PUADP-1 adapter not required
*** The MM² conductor sizes listed are the recommendations for Class 2 conductor

▲ See tooling section of this catalog for complete tool and die listings. Use ONLY color coded die recommendations for -FX connectors. For nest/indentor system contact factory

• Available undrilled. Add suffix U to catalog number (example: YA25U)
♦ For applications greater than 2000 Volts consult cable manufacturer for voltage stress relief instructions
Note: All dimensions shown are for reference only

Blue highlighted items are industry standard and most frequently ordered.

ONE HOLE HYLUG™ CODE CONDUCTOR LONG BARREL (Continued)

UL Listed 90° C,
600 Volts to 35kV ♦

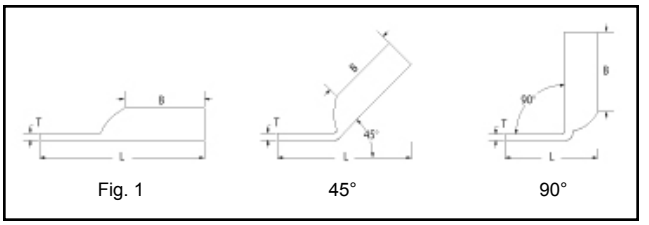

Fig. 1 45° 90°

45° and 90° angles are available.
Please contact Customer Service to order:
1-800-346-4175

Catalog Number	Fig #	Conductor AWG	Conductor *** MM²	Stud Hole Size	Tongue Width	Figure Dimensions (B)	Figure Dimensions (T)	Figure Dimensions (L)	Installation Tooling: Dieless (# of crimps)	Installation Tooling: Mechanical MD6, OUR840, MD7-34R	Installation Tooling: Mechanical BCT500HS, Y500CTHS	Installation Tooling: Hydraulic Y35, Y39 Y750, Y46* PAT750	Color Code	Die Index	Wire Strip Length
YA37N	1	650 kcmil	—	1/2"	1.80"	2.81"	0.27"	4.98"	Y644HSXT (1) Y81KFT (4) Y81KFTMBH (4) PAT81KFT-18V (4)	—	—	U37RT (4)	Orange	23	2-7/8"
YA37				5/8"	1.80"	2.81"	0.27"	5.05"							
YA38N	1	700 kcmil	—	1/2"	1.84"	2.81"	0.27"	5.01"				U38RT (4)	Pink	400	2-7/8"
YA38				5/8"	1.84"	2.81"	0.27"	5.07"							
YA39N	1	750 kcmil	—	1/2"	1.91"	2.88"	0.27"	5.11"				U39RT (4) P39RT (4)**	Black	24	2-15/16"
YA39				5/8"	1.91"	2.88"	0.27"	5.17"							
YA40	1	800 kcmil	400	5/8"	1.98"	2.94"	0.30"	5.25"				P40RT (4)**	Orange	25	3"
YA41N	1	850 kcmil	—	1/2"	2.01"	2.94"	0.31"	5.20"				—	Gold	26	3"
YA41				5/8"	2.01"	2.94"	0.31"	5.26"							
YA44N	1	1000 kcmil	500	1/2"	2.19"	3.00"	0.33"	5.38"		—	—	P44RT (4)**	White	27	3-1/16"
YA44				5/8"	2.19"	3.00"	0.33"	5.45"							
YA45	1	1250 kcmil	—	3/4"	2.46"	3.19"	0.38"	5.93"	—	—	—	P45RT (6)**	Yellow	29	3-1/4"
YA46N	1	1500 kcmil	—	1/2"	2.69"	3.19"	0.40"	5.79"				P46RT (6)**	Green	31	3-5/16"
YA46				3/4"	2.69"	3.19"	0.40"	6.04"							
YA47N	1	1750 kcmil	—	1/2"	2.90"	3.44"	0.42"	6.13"				—	Gray	33	3-1/2"
YA47				3/4"	2.90"	3.44"	0.42"	6.38"							
YA48N	1	2000 kcmil	—	1/2"	3.10"	3.44"	0.46"	6.22"					Brown	34	3-1/2"
YA48				3/4"	3.10"	3.44"	0.46"	6.47"							

* Use PUADP-1 adapter with U dies in Y46 HYPRESS™
** P-RT die sets for use in Y46 HYPRESS™ only, PUADP-1 adapter not required
*** The MM² conductor sizes listed are the recommendations for Class 2 conductor

▲ See tooling section of this catalog for complete tool and die listings. Use ONLY color coded die recommendations for -FX connectors. For nest/indentor system contact factory

• Available undrilled. Add suffix U to catalog number (example: YA25U)
♦ For applications greater than 2000 Volts consult cable manufacturer for voltage stress relief instructions
Note: All dimensions shown are for reference only

Blue highlighted items are industry standard and most frequently ordered.

ONE HOLE HYLUG™ CODE CONDUCTOR LONG BARREL WITH INSPECTION WINDOW

TYPE YAZ

UNINSULATED COPPER COMPRESSION TERMINAL

UL Listed 90° C,
600 Volts to 35 kV ♦

45° and 90° angles are available.
Please contact Customer Service to order:
1-800-346-4175

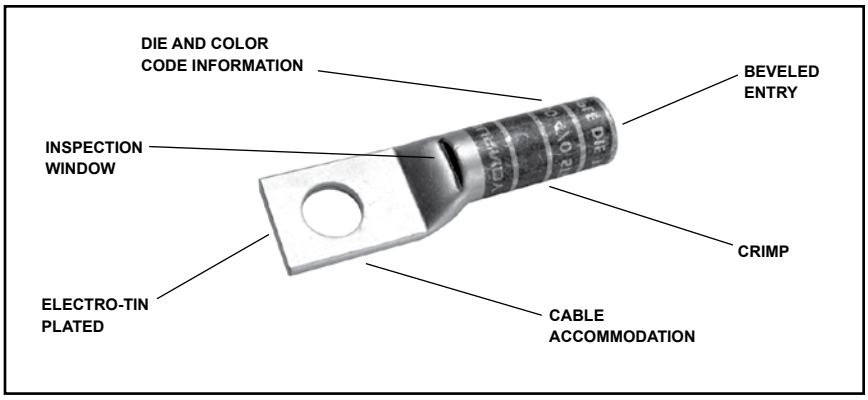

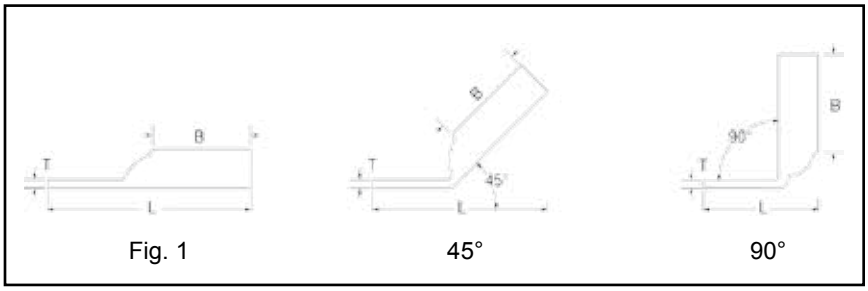

Fig. 1 45° 90°

Catalog Number	Fig #	Conductor AWG	Conductor *** MM²	Stud Hole Size	Tongue Width	Figure Dimensions (B)	(T)	(L)	▲ Installation Tooling: Dieless (# of crimps)	Mechanical: MD6, OUR840, MD7-34R	Hydraulic: BCT500HS, Y500CTHS	Hydraulic: Y35, Y39 Y750,Y46* PAT750	Color Code	Die Index	Wire Strip Length
YAZV10TC14	1	#14-10 Str #12- 10 Sol	6	1/4"	0.41"	0.69"	0.05"	1.52"	Y8MRB-1 (2)	—	—	—	—	—	3/4"
YAZ8CTC10	1	#8 AWG #8 Weld 37/24 #6 Sol #8 Sol	† 10	#10	0.41"	0.75"	0.08"	1.43"	Y1MRTC (2) MY29-3 (2) MY29-11 (2) MRC840 (2) Y644HSXT (1) Y81KFT (1) Y81KFTMBH (1) PAT81KFT-18V (1)	W8CVT (2) W8CRT (2) X8CRT (2)	W8CVT (2) W8CRT (2) X8CRT (2)	U8CRT (2)	Red	49	13/16"
YAZ8CTC14				1/4"	0.44"	0.75"	0.08"	1.56"							
YAZ8CTC38				3/8"	0.58"	0.75"	0.06"	1.75"							
YAZ6CTC14	1	#6 AWG	—	1/4"	0.45"	1.12"	0.08"	2.02"		W5CVT (2) W5CRT (2) X5CRT (2) X8CART (2)	W5CVT (2) W5CRT (2) X5CRT (2) X8CART (2)	U5CRT (2) U8CABT (2)	Blue	7 or 374	1-3/16"
YAZ6CTC38				3/8"	0.58"	1.12"	0.06"	2.21"							
YAZ6CTC12				1/2"	0.75"	1.12"	0.12"	2.46"							
YAZ5CTC12	1	#5 AWG	—	1/2"	0.83"	1.12"	0.12"	2.48"		W5CRT (2) W5CRT (2) X5CRT (2)	W5CVT (2) X5CRT (2) W5CRT (2)	U5CRT (2)	Blue	7 or 374	1-3/16"
YAZ4CTC14	1	#4 AWG	—	1/4"	0.50"	1.12"	0.09"	2.04"	Y1MRTC (4) MY29-3 (2) MY29-11 (2) MRC840 (2) Y644HSXT (1) Y81KFT (1) Y81KFTMBH (1) PAT81KFT-18V (1)	W4CVT (2) W4CRT (2) X4CRT (2)	W4CVT (2) W4CRT (2) X4CRT (2)	U4CRT (2) U6CABT (2)	Gray	8 or 346	1-3/16"
YAZ4CTC38				3/8"	0.58"	1.12"	0.08"	2.22"							
YAZ4CTC12				1/2"	0.73"	1.12"	0.06"	2.50"							

* Use PUADP-1 adapter with U dies in Y46 HYPRESS™
** P-RT die sets for use in Y46 HYPRESS™ only, PUADP-1 adapter not required
*** The MM² conductor sizes listed are the recommendations for Class 2 conductor
† The MM² conductor size listed is for Class 2 and Class 5 conductor
▲ See tooling section of this catalog for complete tool and die listings
• Available undrilled. Add suffix U to catalog number (example: YA25U)
♦ For applications greater than 2000 Volts consult cable manufacturer for voltage stress relief instructions
Note: All dimensions shown are for reference only

Blue highlighted items are industry standard and most frequently ordered.

ONE HOLE HYLUG™ CODE CONDUCTOR LONG BARREL WITH INSPECTION WINDOW (Continued)

UL Listed 90° C,
600 Volts to 35 kV ♦

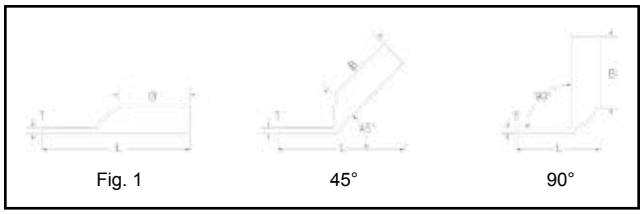

45° and 90° angles are available.
Please contact Customer Service to order:
1-800-346-4175

Catalog Number	Fig #	Conductor AWG	Conductor *** MM²	Stud Hole Size	Tongue Width	Figure Dimensions (B)	(T)	(L)	▲ Installation Tooling: Dieless (# of crimps)	Mechanical: MD6, OUR840, MD7-34R	Hydraulic: BCT500HS, Y500CTHS	Hydraulic: Y35, Y39 Y750, Y46* PAT750	Color Code	Die Index	Wire Strip Length
YAZ3CTC14	1	#3 AWG #2 Sol	25	1/4"	0.55"	1.25"	0.09"	2.19"	Y1MRTC (4) MY29-3 (2) MY29-11 (2) MRC840 (2) Y644HSXT (1) Y81KFT (2) Y81KFTMBH (2) PAT81KFT-18V (2)	W3CRT (2)	W3CRT (2)	U3CRT (2)	White	9	1-5/16"
YAZ3CTC38				3/8"	0.58"	1.25"	0.08"	2.38"							
YAZ3CTC12				1/2"	0.71"	1.25"	0.07"	2.63"							
YAZ2CTC14	1	#2 AWG	35	1/4"	0.60"	1.25"	0.11"	2.21"		W2CVT (2) W2CRT (2) X2CRT (2)	W2CVT (2) W2CRT (2) X2CRT (2)	U2CRT (2)	Brown	10	1-5/16"
YAZ2CTC38				3/8"	0.60"	1.25"	0.11"	2.40"							
YAZ2CTC12				1/2"	0.73"	1.25"	0.09"	2.65"							
YAZ1CTC14	1	#1 AWG	50	1/4"	0.68"	1.38"	0.10"	2.37"		W1CVT (2) W1CRT-1 (2) X1CRT-1 (2)	W1CVT (2) W1CRT-1 (2) X1CRT-1 (2)	U1CRT-1 (2) U4CABT (2)	Green	11 or 375	1-7/16"
YAZ1CTC38				3/8"	0.68"	1.38"	0.10"	2.56"							
YAZ1CTC12				1/2"	0.73"	1.38"	0.09"	2.81"							
YAZ25TC14	1	1/0 AWG	—	1/4"	0.75"	1.38"	0.12"	2.40"	MY29-3 (2) MY29-11 (2) MRC840 (4) Y644HSXT (1) Y81KFT (2) Y81KFTMBH (2) PAT81KFT-18V (2)	W25VT (4) W25RT (4) X25RT (4)	W25VT (4) W25RT (4) X25RT (4)	U25RT (2) U2CABT (2)	Pink	12 or 348	1-7/16"
YAZ25TC516				5/16"	0.75"	1.38"	0.12"	2.46"							
YAZ25TC38				3/8"	0.75"	1.38"	0.12"	2.59"							
YAZ25TC12				1/2"	0.75"	1.38"	0.12"	2.84"							
YAZ26TC14	1	2/0 AWG	70	1/4"	0.83"	1.50"	0.12"	2.56"		W26VT (4) W26RT (4) X26RT (4)	W26VT (4) W26RT (4) X26RT (4)	U26RT (2)	Black	13	1-9/16"
YAZ26TC38				3/8"	0.83"	1.50"	0.12"	2.75"							
YAZ26TC12				1/2"	0.83"	1.50"	0.12"	3.00"							
YAZ27TC38	1	3/0 AWG	—	3/8"	0.90"	1.50"	0.12"	2.79"		W27VT (4) W27RT (4) X27RT (6)	W27VT (4) W27RT (4) X27RT (6)	U27RT (2)	Orange	14	1-9/16"
YAZ27TC12				1/2"	0.90"	1.50"	0.12"	3.04"							
YAZ28TC38	1	4/0 AWG	—	3/8"	1.02"	1.62"	0.14"	2.95"		W28VT (4) W28RT (4) X28RT (6)	W28VT (4) W28RT (4) X28RT (6)	U28RT (2)	Purple	15	1-11/16"
YAZ28TC12				1/2"	1.02"	1.62"	0.14"	3.20"							
YAZ29TC38	1	250 kcmil	—	3/8"	1.10"	1.62"	0.16"	2.98"	MY29-3 (2) MY29-11 (2) Y644HSXT (1) Y81KFT (2) Y81KFTMBH (2) PAT81KFT-18V (2)	W29VT (4) X29RT (8)	W29VT (4) W29RT (4) X29RT (6)	U29RT (2)	Yellow	16	1-11/16"
YAZ29TC12				1/2"	1.10"	1.62"	0.16"	3.23"							
YAZ30TC38	1	300 kcmil	150	3/8"	1.20"	2.00"	0.16"	3.41"	Y644HSXT (1) Y81KFT (3) Y81KFTMBH (3) PAT81KFT-18V (3)	W30VT (4)	W30VT (4) W30RT (4)	U30RT U28ART (4)	White	17 or 298	2-1/16"
YAZ30TC12				1/2"	1.20"	2.00"	0.16"	3.66"							
YAZ31TC38	1	350 kcmil	185	3/8"	1.29"	2.00"	0.18"	3.44"		W31VT (4)	W31VT (4) W31RT (4)	U31RT U29ART (4)	Red	18 or 324	2-1/16"
YAZ31TC12				1/2"	1.29"	2.00"	0.18"	3.69"							
YAZ32TC38	1	400 kcmil	—	3/8"	1.40"	2.12"	0.19"	3.61"		W32VT (4)	W32VT (4) W32RT (4)	U32RT U30ART (4)	Blue	19 or 470	2-3/16"
YAZ32TC12				1/2"	1.40"	2.12"	0.19"	3.86"							

* Use PUADP-1 adapter with U dies in Y46 HYPRESS™
** P-RT die sets for use in Y46 HYPRESS™ only, PUADP-1 adapter not required
*** The MM² conductor sizes listed are the recommendations for Class 2 conductor

▲ See tooling section of this catalog for complete tool and die listings
• Available undrilled. Add suffix U to catalog number (example: YA25U)

♦ For applications greater than 2000 Volts consult cable manufacturer for voltage stress relief instructions
Note: All dimensions shown are for reference only

Blue highlighted items are industry standard and most frequently ordered.

ONE HOLE HYLUG™ CODE CONDUCTOR LONG BARREL WITH INSPECTION WINDOW (Continued)

UL Listed 90° C,
600 Volts to 35 kV ♦

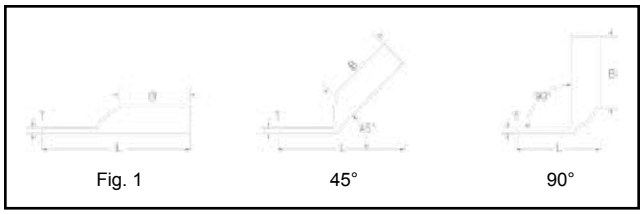

45° and 90° angles are available.
Please contact Customer Service to order:
1-800-346-4175

Catalog Number	Fig #	Conductor AWG	Conductor *** MM²	Stud Hole Size	Tongue Width	Figure Dimensions (B)	(T)	(L)	▲ Installation Tooling: Dieless (# of crimps)	Mechanical: MD6, OUR840, MD7-34R	Hydraulic: BCT500HS, Y500CTHS	Hydraulic: Y35, Y39 Y750, Y46* PAT750	Color Code	Die Index	Wire Strip Length
YAZ33TC12	1	450 kcmil	—	1/2"	1.48"	2.12"	0.21"	3.95"	Y644HSXT (1) Y81KFT (4) Y81KFTMBH (4) PAT81KFT-18V (4)	W33VT (4)	W33VT (4) W33RT (4)	W33RT (4)	Gray	326 or 538	2-5/16"
YAZ34TC38	1	500 kcmil	240	3/8"	1.55"	2.25"	0.23"	3.84"		W34VT (4)	W34VT (4) W34RT (4)	U34RT (4) U31ART (2)	Brown	20 or 299	2-5/16"
YAZ34TC12				1/2"	1.55"	2.25"	0.23"	4.10"							
YAZ35TC12	1	550 kcmil	—	1/2"	1.65"	2.62"	0.25"	4.50"		—	—	U35RT (4)	Yellow	21	2-11/16"
YAZ36TC38	1	600 kcmil	300	3/8"	1.74"	2.69"	0.26"	4.54"	Y644HSXT (1) Y81KFT (4) Y81KFTMBH (4) PAT81KFT-18V (4)	—	—	U36RT (4) U32ART (4)	Green	22 or 472	2-3/4"
YAZ36TC12				1/2"	1.74"	2.69"	0.26"	4.60"							
YAZ37TC12	1	650 kcmil	—	1/2"	1.80"	2.81"	0.27"	4.75"				U37RT (4)	Orange	23	2-7/8"
YAZ38TC12	1	700 kcmil	—	1/2"	1.84"	2.81"	0.27"	4.77"				U38RT (4)	Pink	400	2-7/8"
YAZ39TC38	1	750 kcmil	—	3/8"	1.91"	2.88"	0.27"	4.81"				U39RT (4) P39RT (4)**	Black	24	2-15/16"
YAZ39NT12				1/2"	1.63"	2.88"	0.27"	4.87"							
YAZ39TC12				1/2"	1.91"	2.88"	0.27"	4.87"							
YAZ40TC12	1	800 kcmil	400	1/2"	1.98"	2.94"	0.30"	4.94"		—	—	P40RT (4)**	Orange	25	3"
YAZ41TC12	1	850 kcmil	—	1/2"	2.01"	2.94"	0.31"	4.96"				—	Gold	26	3"
YAZ44TC38	1	1000 kcmil	500	3/8"	2.19"	3.00"	0.33"	5.08"				P44RT (4)**	White	27	3-1/16"
YAZ44TC12				1/2"	2.19"	3.00"	0.33"	5.14"							
YAZ45TC12	1	1250 kcmil	—	1/2"	2.46"	3.19"	0.38"	5.43"	—			P45RT (6)**	Yellow	29	3-1/4"
YAZ453TC12	1	1300 kcmil		1/2"	2.53"	3.19"	0.39"	5.46"				—	Orange	30	
YAZ46TC12	1	1500 kcmil		1/2"	2.69"	3.19"	0.40"	5.53"				P46RT (6)**	Green	31	
YAZ47TC12	1	1750 kcmil		1/2"	2.90"	3.44"	0.42"	5.87"				—	Gray	33	3-1/2"
YAZ48TC12	1	2000 kcmil		1/2"	3.10"	3.44"	0.46"	5.95"					Brown	34	

* Use PUADP-1 adapter with U dies in Y46 HYPRESS™
** P-RT die sets for use in Y46 HYPRESS™ only, PUADP-1 adapter not required
*** The MM² conductor sizes listed are the recommendations for Class 2 conductor

▲ See tooling section of this catalog for complete tool and die listings
• Available undrilled. Add suffix U to catalog number (example: YA25U)

♦ For applications greater than 2000 Volts consult cable manufacturer for voltage stress relief instructions
Note: All dimensions shown are for reference only

Blue highlighted items are industry standard and most frequently ordered.

TWO HOLE HYLUG™ CODE CONDUCTOR STANDARD BARREL

TYPES YAV-2TC, YA-L2L, YA-2LN, AND YA-L-2TC

COPPER COMPRESSION TERMINAL

UL Listed 90° C,
600 Volts to 35 kV ♦

45° and 90° angles are available.
Please contact Customer Service to order.
1-800-346-4175

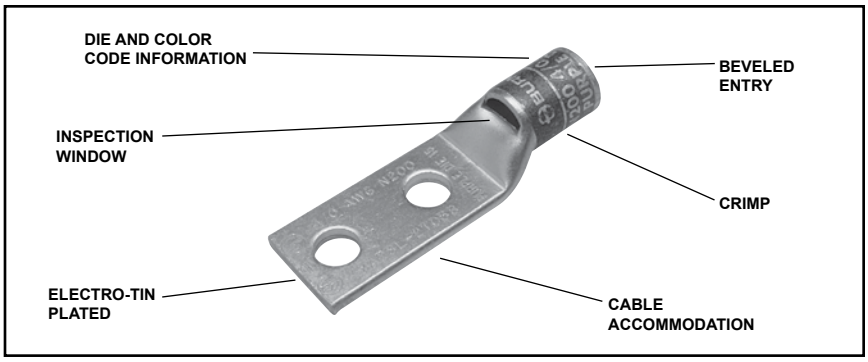

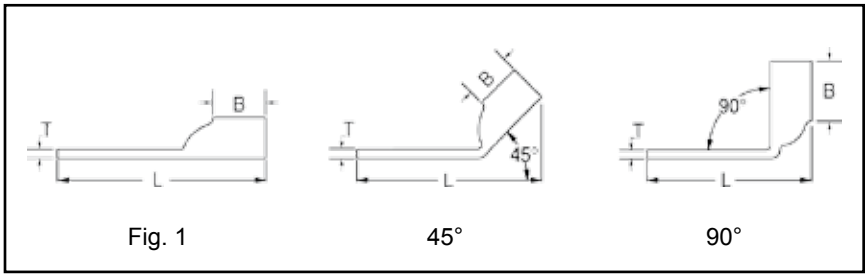

Fig. 1 45° 90°

Catalog Number	Fig #	Conductor AWG	Conductor *** MM²	Stud Hole Size	Stud Hole Spacing	Tongue Width	Figure Dimensions (B)	(T)	(L)	▲ Installation Tooling: Dieless (# of crimps)	Mechanical: MD6, OUR840, MD7-34R	Hydraulic: BCT500HS, Y500CTHS	Hydraulic: Y35, Y39, Y750, Y46* PAT750	Color Code	Die Index	Wire Strip Length
YAV10-2TC10	1	#14-10 Str. #12-10 Sol.	6	#10	5/8"	0.36"	0.38"	0.06"	1.72"	Y8MRB-1 (1)	—	—	—	—	—	7/16"
YAV10-2TC14				1/4"	5/8"	0.41"	0.38"	0.05"	1.84"							
YAV10-2TC14E2				1/4"	3/4"	0.41"	0.38"	0.05"	1.97"							
YAV10-2TC14E1				1/4"	1"	0.41"	0.38"	0.05"	2.22"							
YAV10-2TC38				3/8"	1"	0.56"	0.38"	0.04"	2.40"							
YA8C-L2TC10	1	#8 AWG #8 Weld 37/24 #6 Sol. #8 Sol.	† 10	#10	5/8"	0.41"	0.44"	0.08"	1.83"	Y1MRTC (1) Y8MRB-1 (1) MY29-3 (1) MY29-11 (1) MRC840 (1) Y81KFT (1) Y81KFTMBH (1) PAT81KFT-18V (1)	W8CVT (1) W8CRT (1) X8CRT (1)	W8CVT (1) W8CRT (1) X8CRT (1)	U8CRT (1)	Red	49	1/2"
YA8CL-2TC10E2				#10	3/4"	0.41"	0.44"	0.08"	1.95"							
YA8C-L2TC14				1/4"	5/8"	0.44"	0.44"	0.08"	1.95"							
YA8C-L2TC14E2				1/4"	3/4"	0.44"	0.44"	0.08"	2.08"							
YA8C-L2TC14E1				1/4"	1"	0.44"	0.44"	0.08"	2.33"							
YA8C-L2TC38				3/8"	1"	0.58"	0.44"	0.06"	2.52"							
YA8C-2LN				1/2"	1-3/4"	0.83"	0.44"	0.12"	3.75"							
YA6C-2L51	1	#6 AWG	—	#10	1/2"	0.42"	0.54"	0.09"	1.79"		W5CVT (1) W5CRT (1) X5CRT (1) X8CART (1)	W5CVT (1) W5CRT (1) X5CRT (1) X8CART (1)	U5CRT (1) U8CABT (1)	Blue	7 or 374	5/8"
YA6CL-2TC10				#10	5/8"	0.42"	0.54"	0.09"	1.94"							
YA6C-2L52				1/4"	1/2"	0.45"	0.54"	0.08"	1.88"							
YA6CL-2TC14E				1/4"	1/2"	0.45"	0.54"	0.08"	1.94"							
YA6C-2L				1/4"	5/8"	0.45"	0.54"	0.08"	2.01"							
YA6CL-2TC14				1/4"	5/8"	0.45"	0.54"	0.08"	2.07"							
YA6CL-2TC14E2				1/4"	3/4"	0.45"	0.54"	0.08"	2.19"							
YA6CL-2TC14E1				1/4"	1"	0.45"	0.54"	0.08"	2.44"							

-- Color code not assigned
* Use PUADP-1 adapter with U dies in Y46 HYPRESS™
** P-RT die sets for use in Y46 HYPRESS™ only, PUADP-1 adapter not required
*** The MM² conductor sizes listed are the recommendations for Class 2 conductor
† The MM² conductor size referenced here is for both Class 2 and Class 5
▲ See tooling section of this catalog for complete tool and die listings
♦ For applications greater than 2000 volts consult cable manufacturer for voltage stress relief instructions
Note: All dimensions shown are for reference only

Blue highlighted items are industry standard and most frequently ordered.

TWO HOLE HYLUG™ CODE CONDUCTOR STANDARD BARREL
(Continued)

UL Listed 90° C,
600 Volts to 35 kV ♦

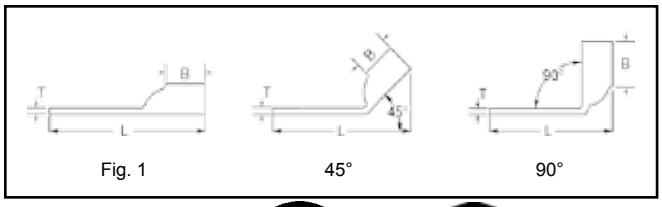

45° and 90° angles are available.
Please contact Customer Service to order.
1-800-346-4175

Catalog Number	Fig #	Conductor AWG	Conductor *** MM²	Stud Hole Size	Stud Hole Spacing	Tongue Width	Figure Dimensions (B)	Figure Dimensions (T)	Figure Dimensions (L)	▲ Installation Tooling: Dieless (# of crimps)	▲ Installation Tooling: Mechanical MD6, OUR840, MD7-34R	▲ Installation Tooling: Hydraulic BCT500HS, Y500CTHS	▲ Installation Tooling: Hydraulic Y35, Y39, Y750, Y46* PAT750	Color Code	Die Index	Wire Strip Length
YA6CL-2TC516E2	1	#6 AWG	—	5/16"	3/4"	0.52"	0.54"	0.07"	2.53"	Y1MRTC (1) MY29-3 (1) MY29-11 (1) MRC840 (1) Y81KFT (1) Y81KFTMBH (1) PAT81KFT-18V (1)	W5CVT (1) W5CRT (1) X5CRT (1) X8CART (1)	W5CVT (1) W5CRT (1) X5CRT (1) X8CART (1)	U5CRT (1) U8CABT (1)	Blue	7 or 374	5/8"
YA6CL-2TC516				5/16"	1"	0.52"	0.54"	0.07"	2.78"							
YA6CL-2TC38				3/8"	1"	0.58"	0.54"	0.06"	2.63"							
YA6C-2LN				1/2"	1-3/4"	0.83"	0.54"	0.12"	4.10"							
YA5C-2L	1	#5 AWG	—	1/4"	5/8"	0.44"	0.81"	0.07"	2.28"							7/8"
YA4C-2L	1	#4 AWG	—	1/4"	5/8"	0.50"	0.81"	0.09"	2.30"	Y1MRTC (2) MY29-3 (1) MY29-11 (1) MRC840 (1) Y644HSXT (1) Y81KFT (1) Y81KFTMBH (1) PAT81KFT-18V (1)	W4CVT (1) W4CRT (1) X4CRT (1)	W4CVT (1) W4CRT (1) X4CRT (1)	U4CRT (1) U6CABT (1)	Gray	8 or 346	7/8"
YA4CL-2TC14				1/4"	5/8"	0.50"	0.81"	0.09"	2.36"							
YA4CL-2TC14E2				1/4"	3/4"	0.50"	0.81"	0.09"	2.49"							
YA4CL-2TC14E1				1/4"	1"	0.50"	0.81"	0.09"	2.74"							
YA4CL-2TC516				5/16"	1"	0.52"	0.81"	0.09"	2.80"							
YA4CL-2TC38				3/8"	1"	0.58"	0.81"	0.08"	2.96"							
YA4C-2LN				1/2"	1-3/4"	0.83"	0.81"	0.12"	4.14"							
YA3CL-2TC14	1	#3 AWG #2 Sol.	25	1/4"	5/8"	0.55"	0.88"	0.09"	2.45"		W3CRT (1)	W3CRT (1)	U3CRT (1)	White	9	15/16"
YA3C-2L				5/16"	5/8"	0.55"	0.88"	0.09"	2.64"							
YA3CL-2TC38				3/8"	1"	0.58"	0.88"	0.08"	3.06"							
YA2CL-2TC14	1	#2 AWG	35	1/4"	5/8"	0.60"	0.88"	0.11"	2.47"		W2CVT (1) W2CRT (1) X2CRT (1)	W2CVT (1) W2CRT (1) X2CRT (1)	U2CRT (1)	Brown	10	15/16"
YA2CL-2TC14E2				1/4"	3/4"	0.60"	0.88"	0.11"	2.60"							
YA2CL-2TC14E1				1/4"	1"	0.60"	0.88"	0.11"	2.85"							
YA2C-2L				5/16"	3/4"	0.60"	0.88"	0.11"	2.67"							
YA2CL-2TC516				5/16"	1"	0.60"	0.88"	0.11"	2.91"							
YA2CL-2TC38				3/8"	1"	0.60"	0.88"	0.11"	3.03"							
YA2C-2LN				1/2"	1-3/4"	0.83"	0.88"	0.12"	4.27"							
YA1CL-2TC14	1	#1 AWG	50	1/4"	5/8"	0.68"	0.88"	0.10"	2.51"		W1CVT (1) W1CRT-1 (1) X1CRT-1 (1)	W1CVT (1) W1CRT-1 (1) X1CRT-1 (1)	U1CRT-1 (1) U4CABT (1)	Green	11 or 375	15/16"
YA1CL-2TC14E2				1/4"	3/4"	0.68"	0.88"	0.10"	2.64"							
YA1C-2L				5/16"	7/8"	0.68"	0.88"	0.10"	2.82"							
YA1CL-2TC38				3/8"	1"	0.68"	0.88"	0.10"	3.07"							
YA1C-2LN				1/2"	1-3/4"	0.83"	0.88"	0.12"	4.32"							
YA25L-2TC14	1	1/0 AWG	—	1/4"	5/8"	0.75"	0.88"	0.12"	2.54"	MY29-3 (1) MY29-11 (1) MRC840 (2) Y644HSXT (1) Y81KFT (1) Y81KFTMBH (1) PAT81KFT-18V (1)	W25VT (2) W25RT (2) X25RT (2)	W25VT (2) W25RT (2) X25RT (2)	U25RT (1) U2CABT (1)	Pink	12 or 348	15/16"
YA25L-2TC14E2				1/4"	3/4"	0.75"	0.88"	0.12"	2.66"							
YA25L-2TC14E1				1/4"	1"	0.75"	0.88"	0.12"	2.91"							
YA25-2L				5/16"	7/8"	0.75"	0.88"	0.12"	2.85"							
YA25L-2TC38				3/8"	1"	0.75"	0.88"	0.12"	3.10"							
YA25-2LN				1/2"	1-3/4"	0.83"	0.88"	0.11"	4.29"							

-- Color code not assigned
* Use PUADP-1 adapter with U dies in Y46 HYPRESS™
** P-RT die sets for use in Y46 HYPRESS™ only, PUADP-1 adapter not required
*** The MM² conductor sizes listed are the recommendations for Class 2 conductor
▲ See tooling section of this catalog for complete tool and die listings
♦ For applications greater than 2000 volts consult cable manufacturer for voltage stress relief instructions
Note: All dimensions shown are for reference only

Blue highlighted items are industry standard and most frequently ordered.

TWO HOLE HYLUG™ CODE CONDUCTOR STANDARD BARREL
(Continued)

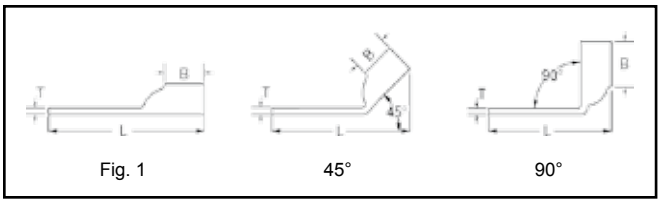

Fig. 1 45° 90°

UL Listed 90° C,
600 Volts to 35 kV ♦

45° and 90° angles are available.
Please contact Customer Service to order.
1-800-346-4175

Catalog Number	Fig #	Conductor AWG	Conductor *** MM²	Stud Hole Size	Stud Hole Spacing	Tongue Width	Figure Dimensions (B)	Figure Dimensions (T)	Figure Dimensions (L)	▲ Installation Tooling: Dieless (# of crimps)	▲ Installation Tooling: Mechanical MD6, OUR840, MD7-34R	▲ Installation Tooling: Hydraulic BCT500HS, Y500CTHS	▲ Installation Tooling: Hydraulic Y35, Y39, Y750, Y46* PAT750	Color Code	Die Index	Wire Strip Length
YA26L-2TC14	1	2/0 AWG	70	1/4"	5/8"	0.83"	0.94"	0.12"	2.64"	MY29-3 (1) MY29-11 (1) MRC840 (2) Y644HSXT (1) Y81KFT (1) Y81KFTMBH (1) PAT81KFT-18V (1)	W26VT (2) W26RT (2) X26RT (2)	W26VT (2) W26RT (2) X26RT (2)	U26RT (1)	Black	13	1"
YA26L-2TC14E2				1/4"	3/4"	0.83"	0.94"	0.12"	2.76"							
YA26L-2TC14E1				1/4"	1"	0.83"	0.94"	0.12"	3.01"							
YA26-2L				5/16"	7/8"	0.83"	0.94"	0.12"	2.95"							
YA26L-2TC38				3/8"	1"	0.83"	0.94"	0.12"	3.20"							
YA26-2LN				1/2"	1-3/4"	0.83"	0.94"	0.12"	4.39"							
YA27L-2TC14E2	1	3/0 AWG	—	1/4"	3/4"	0.91"	1.00"	0.12"	2.86"	MY29-3 (1) MY29-11 (1) MRC840 (2) Y644HSXT (1) Y81KFTMBH (2) PAT81KFT-18V (2) Y81KFT (2)	W27VT (2) W27RT (2) X27RT (3)	W27VT (2) W27RT (2) X27RT (3)	U27RT (1)	Orange	14	1-1/16"
YA27L-2TC38				3/8"	1"	0.91"	1.00"	0.12"	3.30"							
YA27-2LN				1/2"	1-3/4"	0.91"	1.00"	0.13"	4.48"							
YA28L-2TC14E2	1	4/0 AWG	—	1/4"	3/4"	1.02"	0.88"	0.14"	2.78"		W28VT (2) W28RT (2) X28RT (3)	W28VT (2) W28RT (2) X28RT (3)	U28RT (1)	Purple	15	1-1/8"
YA28L-2TC14E1				1/4"	1"	1.02"	0.88"	0.14"	3.03"							
YA28L2NTC516				5/16"	1-3/4"	1.02"	0.88"	0.14"	3.84"							
YA28L-2TC38E2				3/8"	3/4"	1.02"	0.88"	0.14"	2.97"							
YA28L-2TC38				3/8"	1"	1.02"	0.88"	0.14"	3.22"							
YA28-2LN				1/2"	1-3/4"	1.02"	0.88"	0.14"	4.41"							
YA29L-2TC38	1	250 kcmil	—	3/8"	1.00"	1.10"	1.06"	0.16"	3.43"	MY29-3 (1) MY29-11 (1) Y644HSXT (1) Y81KFT (2) Y81KFTMBH (2) PAT81KFT-18V (2)	W29VT (2) X29RT (4)	W29VT (2) W29RT (2) X29RT (4)	U29RT (1)	Yellow	16	1-1/8"
YA29-2LN				1/2"	1-3/4"	1.10"	1.06"	0.16"	4.62"							
YA30L-2TC-38	1	300 kcmil	150	3/8"	1"	1.20"	1.03"	0.16"	3.45"	Y644HSXT (1) Y81KFT (2) Y81KFTMBH (2) PAT81KFT-18V (2)	W30VT (2)	W30VT (2) W30RT (2)	U30RT (2) U28ART (2)	White	17 or 298	1"
YA30-2LN				1/2"	1-3/4"	1.20"	1.03"	0.16"	4.63"							
YA31L-2TC14E2	1	350 kcmil	185	1/4"	3/4"	1.29"	1.06"	0.18"	3.07"		W31VT (2)	W31VT (2) W31RT (2)	U31RT (2) U29ART (2)	Red	18 or 324	1-1/8"
YA31L-2NTC516				5/16"	1-3/4"	1.29"	1.06"	0.18"	4.13"							
YA31L-2TC38				3/8"	1"	1.29"	1.06"	0.18"	3.51"							
YA31L-2TC12				1/2"	1-1/4"	1.29"	1.06"	0.18"	4.01"							
YA31-2LN				1/2"	1-3/4"	1.29"	1.06"	0.18"	4.70"							
YA32-2L	1	400 kcmil	—	3/8"	1"	1.40"	1.19"	0.19"	3.75"		W32VT (2)	W32VT (2) W32RT (2)	U32RT (2) U30ART (2)	Blue	19 or 470	1-1/4"
YA32L-2TC38				3/8"	1"	1.40"	1.19"	0.19"	3.69"							
YA32L-2TC38E5				3/8"	1-1/16"	1.40"	1.19"	0.19"	3.75"							
YA32-2LN				1/2"	1-3/4"	1.40"	1.19"	0.19"	4.88"							

-- Color code not assigned
* Use PUADP-1 adapter with U dies in Y46 HYPRESS™
** P-RT die sets for use in Y46 HYPRESS™ only, PUADP-1 adapter not required
*** The MM² conductor sizes listed are the recommendations for Class 2 conductor
▲ See tooling section of this catalog for complete tool and die listings
♦ For applications greater than 2000 volts consult cable manufacturer for voltage stress relief instructions
Note: All dimensions shown are for reference only.

Blue highlighted items are industry standard and most frequently ordered.

TWO HOLE HYLUG™ CODE CONDUCTOR STANDARD BARREL
(Continued)

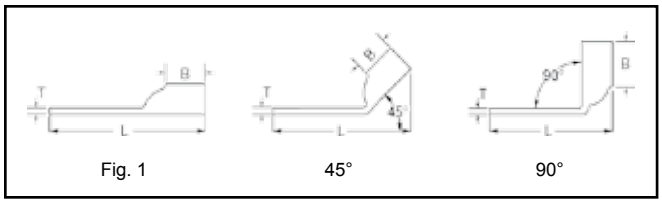

Fig. 1 45° 90°

UL Listed 90° C,
600 Volts to 35 kV ♦

45° and 90° angles are available.
Please contact Customer Service to order.
1-800-346-4175

Catalog Number	Fig #	Conductor AWG	Conductor *** MM²	Stud Hole Size	Stud Hole Spacing	Tongue Width	Figure Dimensions (B)	Figure Dimensions (T)	Figure Dimensions (L)	▲ Installation Tooling: Dieless (# of crimps)	▲ Installation Tooling: Mechanical MD6, OUR840, MD7-34R	▲ Installation Tooling: Hydraulic BCT500HS, Y500CTHS	▲ Installation Tooling: Hydraulic Y35, Y39, Y750, Y46* PAT750	Color Code	Die Index	Wire Strip Length
YA33-2LN	1	450 kcmil	—	1/2"	1-3/4"	1.48"	1.50"	0.21"	5.23"	Y644HSXT (1) Y81KFT (2) Y81KFTMBH (2) PAT81KFT-18V (2)	W33VT (2)	W33VT (2) W33RT (2)	U33RT (2)	Gray	326 or 538	1-9/16"
YA34L-2TC14E2	1	500 kcmil	240	1/4"	3/4"	1.55"	1.27"	0.23"	3.44"		W34VT (2)	W34VT (2) W34RT (2)	U34RT (2) U31ART (2)	Brown	20 or 299	1-7/16"
YA34-2L				3/8"	1"	1.55"	1.27"	0.23"	3.94"							
YA34L-2TC38				3/8"	1"	1.55"	1.27"	0.23"	3.88"							
YA34L-2TC12				1/2"	1-1/4"	1.55"	1.27"	0.23"	4.38"							
YA34-2LN				1/2"	1-3/4"	1.55"	1.27"	0.23"	5.06"							
YA35-2L	1	550 kcmil	—	3/8"	1-1/8"	1.65"	1.69"	0.25"	4.64"		—	—	U35RT (2)	Yellow	21	1-3/4"
YA35-2LN				1/2"	1-3/4"	1.65"	1.69"	0.25"	5.51"							
YA36L-2TC38	1	600 kcmil	300	3/8"	1"	1.74"	1.38"	0.27"	4.23"		—	—	U36RT (2) U32ART (2)	Green	22 or 472	1-3/4"
YA36-2LN				1/2"	1-3/4"	1.74"	1.38"	0.27"	5.23"							
YA37-2L	1	650 kcmil	—	3/8"	1-1/8"	1.80"	1.39"	0.27"	4.40"	Y644HSXT (1) Y81KFT (3) Y81KFTMBH (3) PAT81KFT-18V (3)	—	—	U37RT (2)	Orange	23	1-15/16"
YA37-2LN				1/2"	1-3/4"	1.80"	1.39"	0.27"	5.27"							
YA38L-2TC38	1	700 kcmil	—	3/8"	1"	1.84"	1.45"	0.27"	4.35"		—	—	U38RT (2)	Pink	400	1-15/16"
YA38-2L				3/8"	1-1/8"	1.84"	1.45"	0.27"	4.48"							
YA38L-2TC12				1/2"	1-1/2"	1.84"	1.45"	0.27"	4.67"							
YA38-2LN				1/2"	1-3/4"	1.84"	1.45"	0.27"	5.35"							
YA39L-2TC38	1	750 kcmil	—	3/8"	1"	1.91"	1.42"	0.27"	4.36"	Y644HSXT (1) Y81KFT (3) Y81KFTMBH (3) PAT81KFT-18V (3)	—	—	U39RT (2) P39RT (2)**	Black	24	1-15/16"
YA39-2L				3/8"	1-1/8"	1.91"	1.42"	0.27"	4.48"							
YA39L-2TC12E3				1/2"	1-1/2"	1.91"	1.42"	0.27"	4.92"							
YA39-2LN				1/2"	1-3/4"	1.91"	1.42"	0.27"	5.36"							
YA39L-2TC58				5/8"	1-1/2"	1.91"	1.42"	0.27"	5.17"							
YA40L-2TC38	1	800 kcmil	400	3/8"	1"	1.98"	1.42"	0.30"	4.37"		—	—	P40RT (3)**	Orange	25	1-15/16"
YA40-2L				3/8"	1-1/8"	1.98"	1.42"	0.30"	4.50"							
YA40-2LN				1/2"	1-3/4"	1.98"	1.42"	0.30"	5.38"							
YA41-2L	1	850 kcmil	—	3/8"	1-1/8"	2.01"	1.88"	0.31"	4.97"		—	—	—	Gold	26	1-15/16"
YA44-2L	1	1000 kcmil	500	1/2"	1-1/4"	2.19"	1.65"	0.33"	5.24"		—	—	P44RT (3)**	White	27	1-15/16"
YA44L-2TC12				1/2"	1-1/4"	2.19"	1.65"	0.33"	5.05"							
YA44-2LN				1/2"	1-3/4"	2.19"	1.65"	0.33"	5.74"							

-- Color code not assigned
* Use PUADP-1 adapter with U dies in Y46 HYPRESS™
** P-RT die sets for use in Y46 HYPRESS™ only, PUADP-1 adapter not required

*** The MM² conductor sizes listed are the recommendations for Class 2 conductor
▲ See tooling section of this catalog for complete tool and die listings.

♦ For applications greater than 2000 volts consult cable manufacturer for voltage stress relief instructions.
Note: All dimensions shown are for reference only.

Blue highlighted items are industry standard and most frequently ordered.

TWO HOLE HYLUG™ CODE CONDUCTOR STANDARD BARREL NARROW TONGUE

TYPES YA-L-2NT

COPPER COMPRESSION TERMINAL

UL Listed 90° C,
600 Volts to 35 kV ♦

45° and 90° angles are available.
Please contact Customer Service to order:
1-800-346-4175

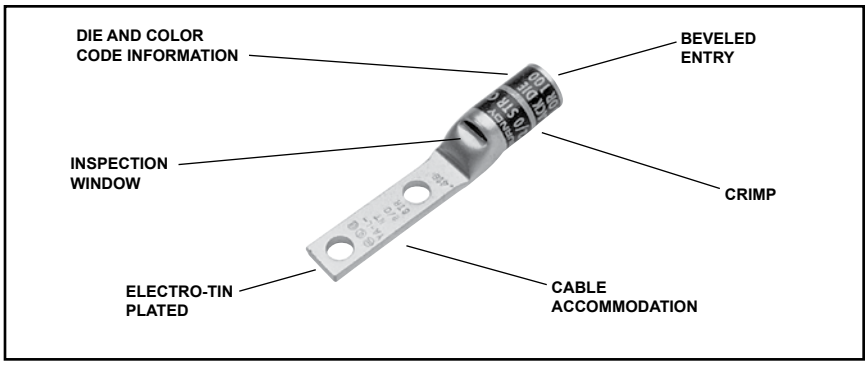

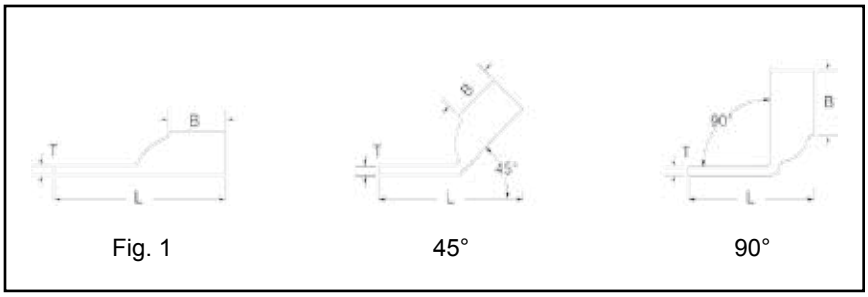

Fig. 1 45° 90°

Catalog Number	Fig #	Conductor AWG	Conductor *** MM²	Stud Hole Size	Stud Hole Spacing	Tongue Width	Figure Dimensions (B)	Figure Dimensions (T)	Figure Dimensions (L)	▲ Installation Tooling: Dieless (# of crimps)	Mechanical: MD6, OUR840, MD7-34R	Hydraulic: BCT500HS, Y500CTHS	Hydraulic: Y35, Y39 Y750, Y46* PAT750	Color Code	Die Index	Wire Strip Length
YA2CL2NT14E2	1	#2 AWG	35	1/4"	1/4"	0.48"	0.88"	0.11"	2.60"	MRC840 (1) MY29-3 (1) MY29-11 (1) Y644HSXT (1) Y1MRTC (2) Y81KFT (1) Y81KFTMBH (1) PAT81KFT-18V (1)	W2CVT (1)	W2CVT (1)	U2CRT (1)	Brown	10	15/16"
YA2CL2NT14				1/4"	5/8"	0.48"	0.88"	0.11"	2.47"							
YA2CL2NT14E1				1/4"	1"	0.48"	0.88"	0.11"	2.84"							
YA1CL2NT14	1	#1 AWG	50	1/4"	5/8"	0.50"	0.88"	0.10"	2.55"		W1CVT (1)	W1CRT-1 (1)	U1CRT-1 (1)	Green	11	15/16"
YA1CL2NT14E2				1/4"	3/4"	0.50"	0.88"	0.10"	2.68"							
YA25L2NT14	1	1/0 AWG	—	1/4"	5/8"	0.48"	0.88"	0.12"	2.56"	MRC840 (2) MY29-3 (1) MY29-11 (1) Y644HSXT (1) Y81KFT (1) Y81KFTMBH (1) PAT81KFT-18V (1)	W25VT (2)	W25VT (2)	U25RT (1)	Pink	12	15/16"
YA25L2NT14E1				1/4"	1"	0.48"	0.88"	0.12"	3.28"							
YA26L2NT14	1	2/0 AWG	70	1/4"	5/8"	0.48"	0.94"	0.12"	2.66"		W26VT (1)	W26VT (2) X26RT (2)	U26RT (1)	Black	13	1"
YA26L2NT14E1				1/4"	1"	0.48"	0.94"	0.12"	3.03"							
YA27L2NT14	1	3/0 AWG	—	1/4"	5/8"	0.76"	1.00"	0.13"	2.73"		W27VT (2) W27RT (2) X27RT (3)	W27VT (2) W27RT (2) X27RT (3)	U27RT (1)	Or-ange	14	1-1/16"
YA27L2NT516				5/16"	1"	0.60"	1.00"	0.13"	3.26"							
YA27L2NT38				3/8"	1"	0.60"	1.00"	0.13"	3.30"							
YA28L2NT14	1	4/0 AWG	—	1/4"	5/8"	0.76"	0.88"	0.13"	2.65"		W28RT (2)	W28RT (2) X28RT (3)	U28RT (1)	Purple	15	1-1/16"
YA29L2NT38	1	250 kcmil	—	3/8"	1"	0.80"	1.00"	0.16"	3.43"	MY29-3 (1) MY29-11 (1) Y644HSXT (1) Y81KFT (1) Y81KFTMBH (1) PAT81KFT-18V (1)	W29VT (2) X29RT (2)	W29VT (2) W29RT (2) X29RT (2)	U29RT (1)	Yellow	16	1-1/8"
YA29L2NT38E16				3/8"	1-3/4"	0.80"	1.06"	0.16"	4.18"							

* Use PUADP-1 adapter with U dies in Y46 HYPRESS™. *** The MM² conductor sizes listed are the recommendations for Class 2 conductor.

Note: All dimensions shown are for reference only.

Blue highlighted items are industry standard and most frequently ordered.

TWO HOLE HYLUG™ CODE CONDUCTOR STANDARD BARREL NARROW TONGUE (Continued)

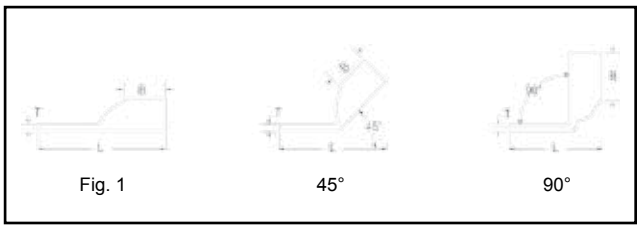

UL Listed 90° C,
600 Volts to 35kV ♦

45° and 90° angles are available.
Please contact Customer Service to order:
1-800-346-4175

Catalog Number	Fig #	Conductor AWG	Conductor *** MM²	Stud Hole Size	Stud Hole Spacing	Tongue Width	Figure Dimensions (B)	Figure Dimensions (T)	Figure Dimensions (L)	▲ Installation Tooling: Dieless (# of crimps)	Mech. MD6, OUR840, MD7-34R	Hydraulic BCT500HS, Y500CTHS	Hydraulic Y35, Y39 Y750, Y46* PAT750	Color Code	Die Index	Wire Strip Length
YA31L2NT38	1	350 kcmil	185	3/8"	1"	0.96"	1.06"	0.18"	3.51"	Y644HSXT (1) Y81KFT (1) Y81KFTMBH (1) PAT81KFT-18V (1)	W31VT (2)	W31VT (2) W31RT (2)	U31RT (1) U29ART (2)	Red	18	1-1/8"
YA31L2NT38E16				3/8"	1-3/4"	0.88"	1.06"	0.18"	4.26"							
YA34L2NT38	1	500 kcmil	240	3/8"	1"	0.96"	1.27"	0.23"	3.65"		W34VT (4)	W34VT (4)	U34RT (2)	Brown	20 or 22	1-7/16"
YA34L2NT38E16				3/8"	1-3/4"	0.96"	1.27"	0.23"	4.63"							
YA34L2NT12E1				1/2"	1"	0.96"	1.27"	0.23"	4.13"							
YA36L2NNT	1	600 kcmil	300	1/2"	1-3/4"	1.12"	1.38"	0.27"	5.43"		—	—	U36RT (2)	Green	472	1-3/4"
YA39L2NT38	1	750 kcmil	—	3/8"	1"	1.63"	1.42"	0.27"	4.34"		—	—	U39RT (2)	Black	24	1-1/2"
YA39L2NT38E16				3/8"	1-3/4"	1.30"	1.42"	0.27"	5.11"							
YA39L2NT12E1				1/2"	1"	1.30"	1.42"	0.27"	4.42"							
YA44L-2NTC12E24	1	1000 kcmil	—	1/2"	1-7/8"	1.63"	1.65"	0.33"	5.65"	Y644HSXT (1) Y81KFT (3) Y81KFTMBH (3) PAT81KFT-18V (3)	—	—	P44RT (3)**	White	27	1-15/16"

* Use PUADP-1 adapter with U dies in Y46 HYPRESS™

*** The MM² conductor sizes listed are the recommendations for Class 2 conductor.

Note: All dimensions shown are for reference only.

Blue highlighted items are industry standard and most frequently ordered.

TWO HOLE HYLUG™ CODE CONDUCTOR LONG BARREL

TYPES YA-2N, YA-2TC, YA-4N

UL Listed 90° C,
600 Volts to 35kV ♦

45° and 90° angles are available.
Please contact Customer Service to order:
1-800-346-4175

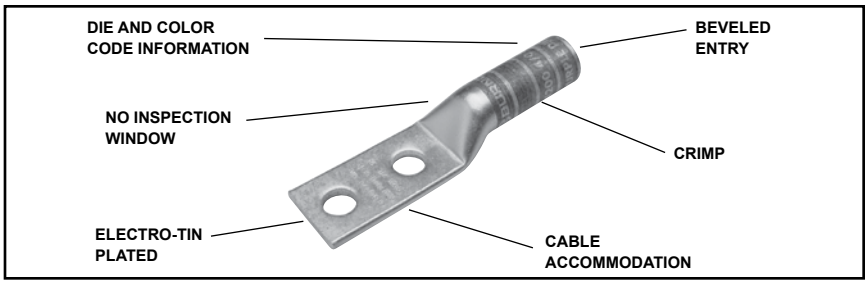

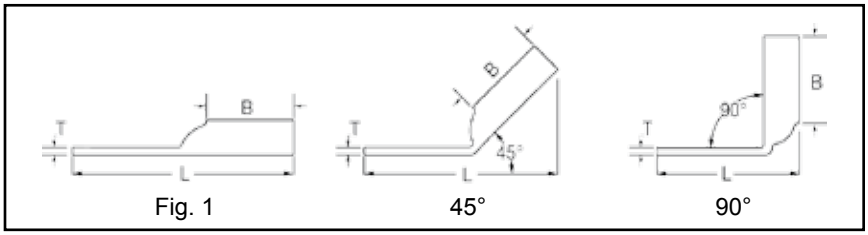

Fig. 1 45° 90°

Catalog Number	Fig #	Conductor AWG	Conductor *** MM²	Stud Hole Size	Stud Hole Spacing	Tongue Width	Figure Dimensions (B)	Figure Dimensions (T)	Figure Dimensions (L)	▲ Installation Tooling: Dieless (# of crimps)	▲ Installation Tooling: Mechanical MD6, OUR840, MD7-34R	▲ Installation Tooling: Hydraulic BCT500HS, Y500CTHS	▲ Installation Tooling: Hydraulic Y35, Y39 Y750, Y46* PAT750	Color Code	Die Index	Wire Strip Length
YA8C2TC14	1	#8 Str. #6 Sol. #8 Sol. #8 Weld 37/24	† 10	1/4"	5/8"	0.44"	0.81"	0.08"	2.33"	Y1MRTC (2) Y8MRB-1 (2) MY29-3 (2) MY29-11 (2) MRC840 (2) Y81KFT (1) Y81KFTMBH (1) PAT81KFT-18V (1)	W8CVT (2) W8CRT (2) X8CRT (2)	W8CVT (2) W8CRT (2) X8CRT (2)	U8CRT (1)	Red	49	7/8"
YA8C2TC14E2				1/4"	3/4"	0.44"	0.81"	0.08"	2.45"							
YA8C2TC38				3/8 "	1"	0.58"	0.81"	0.06"	2.89"							
YA6C2TC14	1	#6 AWG	—	1/4"	5/8"	0.45"	1.12"	0.08"	2.65"	Y1MRTC (2) MY29-3 (2) MY29-11 (2) MRC840 (2) Y81KFT (1) Y81KFTMBH (1) PAT81KFT-18V (1)	W5CVT (2) W5CRT (2) X5CRT (2) X8CART (2)	W5CVT (2) W5CRT (2) X5CRT (2) X8CART (2)	U5CRT (2) U8CABT (2)	Blue	7 or 374	1-3/16"
YA6C2TC14E2				1/4"	3/4"	0.45"	1.12"	0.08"	2.78"							
YA6C2TC14E1				1/4"	1"	0.45"	1.12"	0.08"	3.03"							
YA6C2TC38E2				3/8"	3/4"	0.58"	1.12"	0.06"	2.97"							
YA6C2TC38E6				3/8"	7/8"	0.58"	1.12"	0.06"	3.09"							
YA6C2TC38				3/8"	1"	0.58"	1.12"	0.06"	3.22"							
YA6C2N				1/2"	1-3/4"	0.83"	1.12"	0.12"	4.40"							
YA5C2N	1	#5 AWG	—	1/2"	1-3/4"	0.83"	1.12"	0.12"	4.43"	MY29-3 (2) MY29-11 (2) MRC840 (2) Y644HSXT (1) Y81KFT (1) Y81KFTMBH (1) PAT81KFT-18V (1)	W5CVT (2) W5CRT (2) X5CRT (2)	W5CVT (2) W5CRT (2) X5CRT (2)	U5CRT (2)	Blue	7 or 374	1-3/16"
YA4C2TC14	1	#4 AWG	—	1/4"	5/8"	0.50"	1.12"	0.09"	2.70"	Y1MRTC (4) MY29-3 (2) MY29-11 (2) MRC840 (2) Y644HSXT (1) Y81KFT (1) Y81KFTMBH (1) PAT81KFT-18V (1)	W4CVT (2) W4CRT (2) X4CRT (2)	W4CVT (2) W4CRT (2) X4CRT (2)	U4CRT (2) U6CABT (2)	Gray	8 or 346	1-3/16"
YA4C2TC14E2				1/4"	3/4"	0.50"	1.12"	0.09"	2.83"							
YA4C2TC38				3/8"	1"	0.58"	1.12"	0.08"	3.26"							
YA4C2N				1/2"	1-3/4"	0.83"	1.12"	0.12"	4.45"							
YA3C2TC14	1	#3 Str. #3 AWG #2 Sol.	25	1/4"	5/8"	0.55"	1.25"	0.09"	2.87"		W3CRT (2)	W3CRT (2)	U3CRT (2)	White	9	1-5/16"
YA3C2TC14E2				1/4"	3/4"	0.55"	1.25"	0.09"	2.99"							
YA3C2TC38E2				3/8"	3/4"	0.58"	1.25"	0.08"	3.18"							
YA3C2TC38				3/8"	1"	0.58"	1.25"	0.08"	3.43"							
YA3C2N				1/2"	1-3/4"	0.83"	1.25"	0.12"	4.62"							

▲ See tooling section of this catalog for complete tool and die listings

* Use PUADP-1 adaptor with U dies in Y46 HYPRESS™

** P-RT die sets for use in Y46 HYPRESS™ only, PUADP-1 adapter not required

*** The MM² conductor sizes listed are the recommendations for Class 2 conductor

† The MM² conductor size listed here is for Class 2 and Class 5 conductor

Available undrilled. Add suffix U to catalog number (example: YA25U)

♦ For applications greater than 2000 Volts consult cable manufacturer for voltage stress relief instructions

Note: All dimensions shown are for reference only

Blue highlighted items are industry standard and most frequently ordered.

TWO HOLE HYLUG™ CODE CONDUCTOR LONG BARREL (Continued)

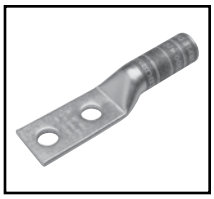

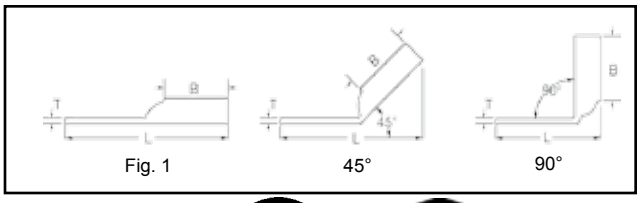

UL Listed 90° C,
600 Volts to 35kV ♦

45° and 90° angles are available.
Please contact Customer Service to order:
1-800-346-4175

Catalog Number	Fig #	Conductor AWG	Conductor *** MM²	Stud Hole Size	Stud Hole Spacing	Tongue Width	Figure Dimensions (B)	Figure Dimensions (T)	Figure Dimensions (L)	▲ Installation Tooling: Dieless (# of crimps)	▲ Installation Tooling: Mechanical MD6, OUR840, MD7-34R	▲ Installation Tooling: Hydraulic BCT500HS, Y500CTHS	▲ Installation Tooling: Hydraulic Y35, Y39 Y750, Y46* PAT750	Color Code	Die Index	Wire Strip Length
YA2C2TC14	1	#2 AWG	35 Class 2 25 Class 5	1/4"	5/8"	0.60"	1.25"	0.11"	2.86"	Y1MRTC (4) MY29-3 (2) MY29-11 (2) MRC840 (2) Y644HSXT (1) Y81KFT (2) Y81KFTMBH (2) PAT81KFT-18V (2)	W2CVT (2) W2CRT (2) X2CRT (2)	W2CVT (2) W2CRT (2) X2CRT (2)	U2CRT (2)	Brown	10	1-5/16"
YA2C2TC14E2				1/4"	3/4"	0.60"	1.25"	0.11"	2.98"							
YA2C2TC516E2				5/16"	3/4"	0.60"	1.25"	0.11"	3.05"							
YA2C2TC38E2				3/8"	3/4"	0.60"	1.25"	0.11"	3.17"							
YA2C2TC38E6				3/8"	7/8"	0.60"	1.25"	0.11"	3.30"							
YA2C2TC38				3/8"	1"	0.60"	1.25"	0.11"	3.42"							
YA2C2NTC38				3/8"	1-3/4"	0.60"	1.25"	0.11"	4.17"							
YA2C2N				1/2"	1-3/4"	0.83"	1.25"	0.12"	4.64"							
YA1C2TC14	1	#1 AWG	50	1/4"	5/8"	0.67"	1.38"	0.10"	3.03"		W1CVT (2) W1CRT-1 (2) X1CRT-1 (2)	W1CVT (2) W1CRT-1 (2) X1CRT-1 (2)	U1CRT-1 (2) U4CABT (2)	Green	11 or 375	1-7/16"
YA1C2TC14E2				1/4"	3/4"	0.67"	1.38"	0.10"	3.15"							
YA1C2TC38				3/8"	1"	0.67"	1.38"	0.10"	3.59"							
YA1C2N				1/2"	1-3/4"	0.83"	1.38"	0.12"	4.82"							
YA252TC14	1	1/0 AWG	—	1/4"	5/8"	0.75"	1.38"	0.12"	3.05"	MY29-3 (2) MY29-11 (2) MRC840 (4) Y644HSXT (1) Y81KFT (2) Y81KFTMBH (2) PAT81KFT-18V (2)	W25VT (4) W25RT (4) X25RT (4)	W25VT (4) W25RT (4) X25RT (4)	U25RT (2) U2CABT (2)	Pink	12	1-7/16"
YA252TC14E2				1/4"	3/4"	0.75"	1.38"	0.12"	3.18"							
YA252TC516				5/16"	1"	0.75"	1.38"	0.12"	3.49"							
YA252TC38				3/8"	1"	0.75"	1.38"	0.12"	3.62"							
YA252NTC38				3/8"	1-3/4"	0.75"	1.38"	0.12"	4.37"							
YA252N				1/2"	1-3/4"	0.83"	1.38"	0.11"	4.81"							
YA262TC14	1	2/0 AWG	70	1/4"	5/8"	0.83"	1.50"	0.12"	3.22"		W26VT (4) W26RT (4) X26RT (4)	W26VT (4) W26RT (4) X26RT (4)	U26RT (2)	Black	13	1-9/16"
YA262TC14E2				1/4"	3/4"	0.83"	1.50"	0.12"	3.34"							
YA262TC38				3/8"	1"	0.83"	1.50"	0.12"	3.78"							
YA262N				1/2"	1-3/4"	0.83"	1.50"	0.12"	4.97"							
YA272TC14E2	1	3/0 AWG	—	1/4"	3/4"	0.90"	1.50"	0.12"	3.38"		W27VT (4) W27RT (4) X27RT (6)	W27VT (4) W27RT (4) X27RT (6)	U27RT (2)	Orange	14	1-9/16"
YA272TC38				3/8"	1"	0.90"	1.50"	0.12"	3.82"							
YA272N				1/2"	1-3/4"	0.91"	1.50"	0.13"	5.01"							
YA282TC14E2	1	4/0 AWG	—	1/4"	3/4"	1.02"	1.62"	0.14"	3.55"		W28VT (4) W28RT (4) X28RT (6)	W28VT (4) W28RT (4) X28RT (6)	U28RT (2)	Purple	15	1-11/16"
YA282TC38				3/8"	1"	1.02"	1.62"	0.14"	3.99"							
YA282NTC38				3/8"	1-3/4"	1.02"	1.62"	0.14"	4.74"							
YA282N				1/2"	1-3/4"	1.02"	1.62"	0.14"	5.17"							
YA292TC38	1	250 kcmil	—	3/8"	1"	1.10"	1.62"	0.16"	4.02"	MY29-3 (2) MY29-11 (2) Y644HSXT (1) Y81KFT (2) Y81KFTMBH (2) PAT81KFT-18V (2)	W29VT (4) X29RT (8)	W28VT (4) W28RT (4) X28RT (8)	U29RT (2)	Yellow	16	1-11/16"
YA292N				1/2"	1-3/4"	1.11"	1.62"	0.16"	5.21"							
YA292TC58E16				5/8	1-3/4″	1.11	1.62"	0.16"	5.27"							

▲ See tooling section of this catalog for complete tool and die listings

* Use PUADP-1 adaptor with U dies in Y46 HYPRESS™

** P-RT die sets for use in Y46 HYPRESS™ only, PUADP-1 adapter not required

*** The MM² conductor sizes listed are the recommendations for Class 2 conductor Available undrilled. Add suffix U to catalog number (example: YA25U)

♦ For applications greater than 2000 Volts consult cable manufacturer for voltage stress relief instructions

Note: All dimensions shown are for reference only

Blue highlighted items are industry standard and most frequently ordered.

TWO HOLE HYLUG™ CODE CONDUCTOR LONG BARREL (Continued)

UL Listed 90° C,
600 Volts to 35kV ♦

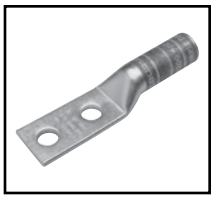

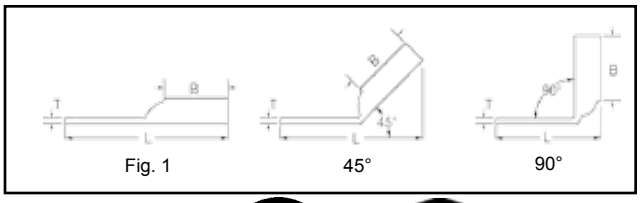

Fig. 1 45° 90°

45° and 90° angles are available.
Please contact Customer Service to order:
1-800-346-4175

Catalog Number	Fig #	Conductor AWG	Conductor *** MM²	Stud Hole Size	Stud Hole Spacing	Tongue Width	Figure Dimensions (B)	Figure Dimensions (T)	Figure Dimensions (L)	▲ Installation Tooling: Dieless (# of crimps)	Mechanical: MD6, OUR840, MD7-34R	Hydraulic: BCT500HS, Y500CTHS	Hydraulic: Y35, Y39 Y750, Y46* PAT750	Color Code	Die Index	Wire Strip Length
YA302TC38	1	300 kcmil	150	3/8"	1"	1.20"	2.00"	0.16"	4.45"	Y644HSXT (1) Y81KFT (3) Y81KFTMBH (3) PAT81KFT-18V (3)	W30VT (4)	W30VT (4) W30RT (4)	U30RT (4) U28ART (4)	White	17 or 298	2-1/16"
YA302N				1/2"	1-3/4"	1.20"	2.00"	0.16"	5.64"							
YA312TC14E2	1	350 kcmil	185	1/4"	3/4"	1.29"	2.00"	0.18"	4.05"		W31VT (4)	W31VT (4) W31RT (4)	U31RT (4) U29ART (4)	Red	18 or 324	2-1/16"
YA312TC38				3/8"	1"	1.29"	2.00"	0.18"	4.49"							
YA312N				1/2"	1-3/4"	1.29"	2.00"	0.18"	5.69"							
YA322TC38	1	400 kcmil	—	3/8"	1"	1.40"	2.12"	0.19"	4.66"		W32VT (4)	W32VT (4) W32RT (4)	U32RT (4) U30ART (4)	Blue	19 or 470	2-3/16"
YA322N				1/2"	1-3/4"	1.40"	2.12"	0.19"	5.85"							
YA332N	1	450 kcmil	—	1/2"	1-3/4"	1.48"	2.13"	0.21"	5.93"	Y644HSXT (1) Y81KFT (4) Y81KFTMBH (4) PAT81KFT-18V (4)	W33VT (4)	W33VT (4) W33RT (4)	U33RT	Gray	326 or 538	2-3/16"
YA342TC14E2	1	500 kcmil	240	1/4"	3/4"	1.55"	2.25"	0.23"	4.46"		W34VT (4)	W34VT (4) W34RT (4)	U34RT (4) U31ART (2)	Brown	20 or 299	2-5/16"
YA342TC38				3/8"	1"	1.55"	2.25"	0.23"	4.90"							
YA342N				1/2"	1-3/4"	1.55"	2.25"	0.23"	6.06"							
YA352N	1	550 kcmil	—	1/2"	1-3/4"	1.65"	2.63"	0.25"	6.49"		—	—	U35RT (4)	Yellow	21	2-11/16"
YA362TC38	1	600 kcmil	300	3/8"	1"	1.74"	2.69"	0.26"	5.59"		—	—	U36RT (4) U32ART (4)	Green	22 or 472	2-3/4"
YA362N				1/2"	1-3/4"	1.74"	2.69"	0.27"	6.59"							
YA372N	1	650 kcmil	—	1/2"	1-3/4"	1.80"	2.81"	0.27"	6.74"		—	—	U37RT (4)	Orange	23	2-7/8"
YA382TC38	1	700 kcmil	—	3/8"	1"	1.84"	2.81"	0.27"	5.76"		—	—	U38RT (4)	Pink	400	2-7/8"
YA382N				1/2"	1-3/4"	1.84"	2.81"	0.27"	6.77"							
YA392NT38	1	750 kcmil	—	3/8"	1"	1.63"	2.88"	0.27"	5.87"		—	—	U39RT (4) P39RT (4)**	Black	24	2-15/16"
YA392TC38				3/8"	1″	1.91"	2.88"	0.27"	5.87"							
YA392N				1/2"	1-3/4″	1.91"	2.88"	0.27"	6.87"							
YA392ENNT				1/2	1-3/4"	1.30	2.88	—	6.87		—	—	—	Black	24	2-15/16"
YA402N	1	800 kcmil	400	1/2"	1-3/4″	1.98"	2.94"	0.30"	6.95"		—	—	P40RT (4)**	Orange	25	3"
YA412N	1	850 kcmil	—	1/2"	1-3/4″	2.01"	2.94"	0.31"	6.96"		—	—	—	Gold	26	3"
YA442TC38	1	1000 kcmil	500	3/8"	1"	2.19"	3.00"	0.33"	6.14"		—	—	P44RT (4)**	White	27	3-1/16"
YA442N				1/2"	1-3/4″	2.19"	3.00"	0.32"	7.14"							
YA452N	1	1250 kcmil	—	1/2"	1-3/4"	2.46"	3.19"	0.38"	7.44"	—	—	—	P45RT (6)**	Yellow	29	3-1/4"
YA4532N	1	1300 kcmil	—	1/2"	1-3/4"	2.53"	3.19"	0.39"	7.48"		—	—	—	Orange	30	
YA462N	1	1500 kcmil	—	1/2"	1-3/4"	2.69"	3.19"	0.40"	7.55"		—	—	P46RT (6)**	Green	31	
YA472N	1	1750 kcmil	—	1/2"	1-3/4"	2.90"	3.44"	0.42"	7.89"		—	—	—	Gray	33	3-1/2"
YA482N	1	2000 kcmil	—	1/2"	1-3/4"	3.10"	3.44"	0.46"	7.98"		—	—	—	Brown	34	

▲ See tooling section of this catalog for complete tool and die listings.

* Use PUADP-1 adaptor with U dies in Y46 HYPRESS™

** P-RT die sets for use in Y46 HYPRESS™ only, PUADP-1 adapter not required.

*** The MM² conductor sizes listed are the recommendations for Class 2 conductor. Available undrilled. Add suffix U to catalog number (example: YA25U).

♦ For applications greater than 2000 Volts consult cable manufacturer for voltage stress relief instructions.

Note: All dimensions shown are for reference only.

Blue highlighted items are industry standard and most frequently ordered.

TWO HOLE HYLUG™ CODE CONDUCTOR LONG BARREL WITH INSPECTION WINDOW

TYPES YAZ-2N, YAZ-2TC

COPPER COMPRESSION TERMINAL

UL Listed 90° C,
600 Volts to 35kV ♦

45° and 90° angles are available. Please contact Customer Service to order:
1-800-346-4175

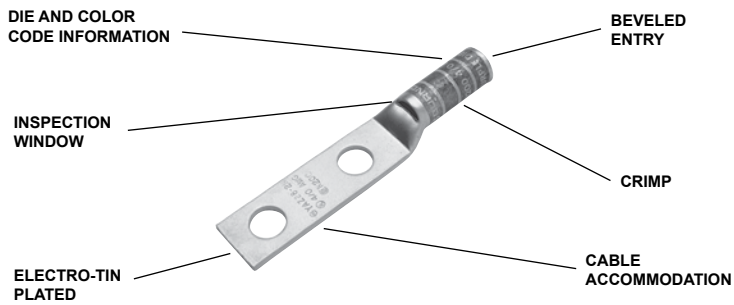

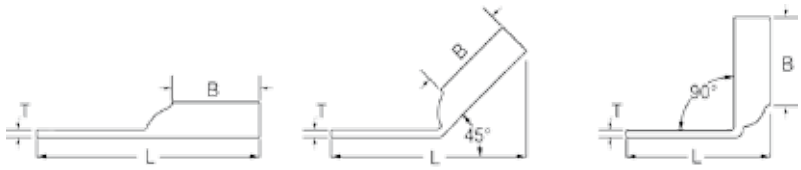

Fig. 1 45° 90°

Catalog Number	Fig #	Conductor AWG	Conductor *** MM²	Stud Hole Size	Stud Hole Spacing	Tongue Width	Figure Dimensions (B)	Figure Dimensions (T)	Figure Dimensions (L)	▲ Installation Tooling: Dieless (# of crimps)	▲ Installation Tooling: Mechanical MD6, OUR840, MD7-34R	▲ Installation Tooling: Hydraulic BCT500HS, Y500CTHS	▲ Installation Tooling: Hydraulic Y35, Y39 Y750, Y46* PAT750	Color Code	Die Index	Wire Strip Length
YAZV10-2TC14	1	#14 - #10 AWG	6	1/4"	5/8"	0.41"	0.69"	0.05"	2.16"	Y8MRB-1 (2)	—	—	—	—	—	3/4"
YAZV10-2TC14E2				1/4"	3/4"	0.41"	0.69"	0.05"	2.28"							
YAZ8C-2TC10	1	#8 Str #6 Sol #8 Weld 37/24 #8 Sol	† 10	#10	5/8"	0.41"	0.75"	0.08"	2.07"	Y1MRTC (2) Y8MRB-1 (2) MY29-3 (2) MY29-11 (2) MRC840 (2) Y81KFT (1) Y81KFTMBH (1) PAT81KFT-18V (1)	W8CVT (2) W8CRT (2) X8CRT (2)	W8CVT (2) W8CRT (2) X8CRT (2)	U8CRT (2)	Red	49	7/8"
YAZ8C-2TC10E2				#10	3/4"	0.41"	0.75"	0.08"	2.19"							
YAZ8C-2TC14				1/4"	5/8"	0.44"	0.75"	0.08"	2.19"							
YAZ8C-2TC14E2				1/4"	3/4"	0.44"	0.75"	0.08"	2.32"							
YAZ8C-2TC14E1				1/4"	1"	0.44"	0.75"	0.08"	2.57"							
YAZ8C-2TC38				3/8"	1"	0.58"	0.75"	0.06"	2.76"							
YAZ6C-2TC10E2	1	#6 AWG	—	#10	3/4"	0.42"	1.12"	0.09"	2.65"	Y1MRTC (2) MY29-3 (2) MY29-11 (2) MRC840 (2) Y644HSXT (2) Y81KFT (1) Y81KFTMBH (1) PAT81KFT-18V (1)	W5CVT (2) W5CRT (2) X5CRT (2) X8CART (2)	W5CVT (2) W5CRT (2) X5CRT (2) X8CART (2)	U5CRT (2) U8CABT (2)	Blue	7 or 374	1-3/16"
YAZ6C-2TC14				1/4"	5/8"	0.45"	1.12"	0.08"	2.65"							
YAZ6C-2TC14E2				1/4"	3/4"	0.45"	1.12"	0.08"	2.78"							
YAZ6C-2TC14E1				1/4"	1"	0.45"	1.12"	0.08"	3.03"							
YAZ6C-2TC38E2				3/8"	3/4"	0.58"	1.12"	0.06"	2.97"							
YAZ6C-2TC38E6				3/8"	7/8"	0.58"	1.12"	0.06"	3.09"							
YAZ6C-2TC38				3/8"	1"	0.58"	1.12"	0.06"	3.22"							
YAZ6C2TC38E16				3/8	1-3/4"	0.58"	1.12"	0.06"	3.97"							
YAZ6C-2N				1/2"	1-3/4"	0.83"	1.12"	0.12"	4.40"							
YAZ5C-2N	1	#5 AWG	—	1/2"	1-3/4"	0.83"	1.12"	0.12"	4.43"		W5CRT (2) W5CVT (2) X5CRT (2)	W5CVT (2) W5CRT (2) X5CRT (2)	U5CRT (2)	Blue	7 or 374	1-3/16"

▲ See tooling section of this catalog for complete tool and die listings

* Use PUADP-1 adaptor with U dies in Y46 HYPRESS™

** P-RT die sets for use in Y46 HYPRESS™ only, PUADP-1 adapter not required

*** The MM² conductor sizes listed are the recommendations for Class 2 conductor.

† The MM² conductor size referred to here is for Class 2 and Class 5 conductor. Available undrilled. Add suffix U to catalog number (example: YA25U)

♦ For applications greater than 2000 Volts consult cable manufacturer for voltage stress relief instructions.

Note: All dimensions shown are for reference only.

Blue highlighted items are industry standard and most frequently ordered.

TWO HOLE HYLUG™ CODE CONDUCTOR LONG BARREL WITH INSPECTION WINDOW (Continued)

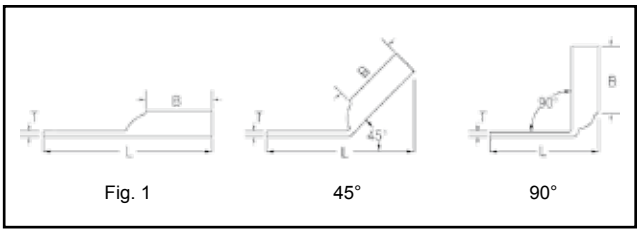

Fig. 1 45° 90°

UL Listed 90° C,
600 Volts to 35kV ♦

45° and 90° angles are available.
Please contact Customer Service to order:
1-800-346-4175

Catalog Number	Fig #	Conductor AWG	Conductor *** MM²	Stud Hole Size	Stud Hole Spacing	Tongue Width	Figure Dimensions (B)	Figure Dimensions (T)	Figure Dimensions (L)	▲ Installation Tooling: Dieless (# of crimps)	▲ Installation Tooling: Mechanical MD6, OUR840, MD7-34R	▲ Installation Tooling: Hydraulic BCT500HS, Y500CTHS	▲ Installation Tooling: Hydraulic Y35, Y39 Y750, Y46* PAT750	Color Code	Die Index	Wire Strip Length
YAZ4C-2TC10-E2	1	#4 AWG	—	#10	3/4"	0.50"	1.12"	0.09"	2.67"	Y1MRTC (4) MY29-3 (2) MY29-11 (2) MRC840 (2) Y644HSXT (2) Y81KFT (1) Y81KFTMBH (1) PAT81KFT-18V (1)	W4CVT (2) X4CRT (2) X4CRT (2)	W4CVT (2) W4CRT (2) X4CRT (2)	U4CRT (2) U6CABT (2)	Gray	8 or 346	1-3/16"
YAZ4C-2TC14				1/4"	5/8"	0.50"	1.12"	0.09"	2.67"							
YAZ4C-2TC14E2				1/4"	3/4"	0.50"	1.12"	0.09"	2.80"							
YAZ4C-2TC38				3/8"	1"	0.58"	1.12"	0.08"	3.23"							
YAZ4C-2N				1/2"	1-3/4"	0.83"	1.12"	0.12"	4.45"							
YAZ3C-2TC14	1	#3 AWG #2 Sol	25	1/4"	5/8"	0.55"	1.25"	0.09"	2.83"	Y1MRTC (4) MY29-3 (2) MY29-11 (2) MRC840 (2) Y644HSXT (2) Y81KFT (2) Y81KFTMBH (2) PAT81KFT-18V (2)	W3CRT (2)	W3CRT (2)	U3CRT (2)	White	9	1-5/16"
YAZ3C-2TC14E2				1/4"	3/4"	0.55"	1.25"	0.09"	2.95"							
YAZ3C-2TC38E2				3/8"	3/4"	0.58"	1.25"	0.08"	3.14"							
YAZ3C-2TC38				3/8"	1"	0.58"	1.25"	0.08"	3.39"							
YAZ3C-2N				1/2"	1-3/4"	0.83"	1.25"	0.12"	4.62"							
YAZ2C-2TC10E2	1	#2 AWG	35	#10	3/4"	0.60"	1.25"	0.11"	2.85"	Y1MRTC (4) MY29-3 (2) MY29-11 (2) MRC840 (2) Y644HSXT (1) Y81KFT (2) Y81KFTMBH (2) PAT81KFT-18V (2)	W2CVT (2) W2CRT (2) X2CRT (2)	W2CVT (2) W2CRT (2) X2CRT (2)	U2CRT (2)	Brown	10	1-5/16"
YAZ2C-2TC14				1/4"	5/8"	0.60"	1.25"	0.11"	2.85"							
YAZ2C-2TC14E2				1/4"	3/4"	0.60"	1.25"	0.11"	2.97"							
YAZ2C-2TC14E1				1/4"	1"	0.60"	1.25"	0.11"	3.22"							
YAZ2C2TC516E7				5/16"	5/8″	0.60″	1.25"	0.11"	2.91"							
YAZ2C-2TC516E2				5/16"	3/4"	0.60"	1.25"	0.11"	3.03"							
YAZ2C-2TC38E2				3/8"	3/4"	0.60"	1.25"	0.11"	3.16"							
YAZ2C-2TC38E6				3/8"	7/8"	0.60"	1.25"	0.11"	3.28"							
YAZ2C-2TC38				3/8"	1"	0.60"	1.25"	0.11"	3.41"							
YAZ2C-2NTC38				3/8"	1-3/4"	0.60"	1.25"	0.11"	4.16"							
YAZ2C-2N				1/2"	1-3/4"	0.83"	1.25"	0.12"	4.64"							
YAZ1C-2TC14	1	#1 AWG	50	1/4"	5/8"	0.67"	1.38"	0.10"	3.01"		W1CVT (2) W1CRT-1 (2) X1CRT-1 (2)	W1CVT (2) W1CRT-1 (2) X1CRT-1 (2)	U1CRT-1 (2) U4CABT (2)	Green	11 or 375	1-7/16"
YAZ1C-2TC14E2				1/4"	3/4"	0.67"	1.38"	0.10"	3.13"							
YAZ1C-2TC38				3/8"	1"	0.67"	1.38"	0.10"	3.57"							
YAZ1C-2N				1/2"	1-3/4"	0.83"	1.38"	0.12"	4.82"							

▲ See tooling section of this catalog for complete tool and die listings

* Use PUADP-1 adaptor with U dies in Y46 HYPRESS™

** P-RT die sets for use in Y46 HYPRESS™ only, PUADP-1 adapter not required

*** The MM² conductor sizes listed are the recommendations for Class 2 conductor.

† The MM² conductor size referred to here is for Class 2 and Class 5 conductor.

Available undrilled. Add suffix U to catalog number (example: YA25U).

♦ For applications greater than 2000 Volts consult cable manufacturer for voltage stress relief instructions.

Note: All dimensions shown are for reference only.

Blue highlighted items are industry standard and most frequently ordered.

TWO HOLE HYLUG™ CODE CONDUCTOR LONG BARREL WITH INSPECTION WINDOW (Continued)

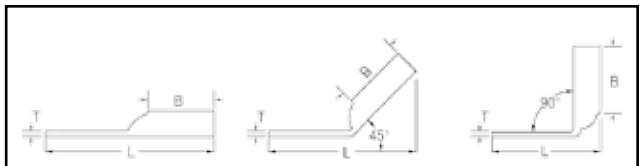

Fig. 1 45° 90°

UL Listed 90° C,
600 Volts to 35kV ♦

45° and 90° angles are available.
Please contact Customer Service to order:
1-800-346-4175

Catalog Number	Fig #	Conductor AWG	Conductor *** MM²	Stud Hole Size	Stud Hole Spacing	Tongue Width	Figure Dimensions (B)	Figure Dimensions (T)	Figure Dimensions (L)	▲ Installation Tooling: Dieless (# of crimps)	▲ Installation Tooling: Mechanical MD6, OUR840, MD7-34R	▲ Installation Tooling: Hydraulic BCT500HS, Y500CTHS	▲ Installation Tooling: Hydraulic Y35, Y39 Y750, Y46* PAT750	Color Code	Die Index	Wire Strip Length
YAZ25-2TC14	1	1/0 AWG	—	1/4"	5/8"	0.75"	1.38"	0.12"	3.04"	MY29-3 (2) MY29-11 (2) MRC840 (4) Y644HSXT (1) Y81KFT (2) Y81KFTMBH (2) PAT81KFT-18V (2)	W25VT (4) W25RT (4) X25RT (4)	W25VT (4) W25RT (4) X25RT (4)	U25RT (2) U2CABT (2)	Pink	12 or 348	1-7/16"
YAZ25-2TC14E2				1/4"	3/4"	0.75"	1.38"	0.12"	3.16"							
YAZ25-2TC14E1				1/4"	1"	0.75"	1.38"	0.12"	3.41"							
YAZ252TC14E3				1/4″	1″	0.75"	1.38"	0.12"	3.42"							
YAZ25-2TC516E6				5/16"	7/8"	0.75"	1.38"	0.12"	3.35"							
YAZ25-2TC516				5/16"	1"	0.75"	1.38"	0.12"	3.47"							
YAZ25-2TC38				3/8"	1"	0.75"	1.38"	0.12"	3.60"							
YAZ25-2NTC38				3/8"	1-3/4"	0.75"	1.38"	0.12"	4.35"							
YAZ25-2N				1/2"	1-3/4"	0.83"	1.38"	0.11"	4.79"							
YAZ26-2TC14	1	2/0 AWG	70	1/4"	5/8"	0.83"	1.50"	0.12"	3.20"		W26VT (4) W26RT (4) X26RT (4)	W26VT (4) W26RT (4) X26RT (4)	U26RT (2)	Black	13	1-9/16"
YAZ26-2TC14E2				1/4"	3/4"	0.83"	1.50"	0.12"	3.32"							
YAZ262TC14E1				1/4"	1"	0.83"	1.50"	0.12"	3.57"							
YAZ26-2TC38				3/8"	1"	0.83"	1.50"	0.12"	3.76"							
YAZ262TC38E16				3/8"	1-3/4"	0.83"	1.50"	0.12"	4.51"							
YAZ26-2N				1/2"	1-3/4"	0.83"	1.50"	0.12"	4.95"							
YAZ27-2TC14E2	1	3/0 AWG	—	1/4"	3/4"	0.90"	1.50"	0.12"	3.36"		W27VT (4) W27RT (4) X27RT (6)	W27VT (4) W27RT (4) X27RT (6)	U27RT (2)	Orange	14	1-9/16"
YAZ27-2TC38				3/8"	1"	0.90"	1.50"	0.12"	3.80"							
YAZ27-2N				1/2"	1-3/4"	0.91"	1.50"	0.12"	4.98"							
YAZ28-2TC14E2	1	4/0 AWG	—	1/4"	3/4"	1.02"	1.62"	0.14"	3.55"		W28VT (4) W28RT (4) X28RT (6)	W28VT (4) W28RT (4) X28RT (6)	U28RT (2)	Purple	15	1-11/16"
YAZ28-2TC38				3/8"	1"	1.02"	1.62"	0.14"	3.99"							
YAZ28-2NTC38				3/8"	1-3/4"	1.02"	1.62"	0.14"	4.74"							
YAZ28-2N				1/2"	1-3/4"	1.02"	1.62"	0.14"	5.15"							
YAZ29-2TC38	1	250 kcmil	—	3/8"	1"	1.10"	1.62"	0.14"	3.99"	MY29-3 (2) MY29-11 (2) Y644HSXT (1) Y81KFT (2) Y81KFTMBH (2) PAT81KFT-18V (2)	W29VT (4) W29RT (8)	W29VT (4) W29RT (4) X29RT (8)	U29RT (2)	Yellow	16	1-11/16"
YAZ29-2N				1/2"	1-3/4"	1.10"	1.62"	0.16"	5.18"							
YAZ30-2TC38	1	300 kcmil	150	3/8"	1"	1.20"	2.00"	0.16"	4.42"	Y644HSXT (1) Y81KFT (3) Y81KFTMBH (3) PAT81KFT-18V (3)	W30VT (4)	W30VT (4) W30RT (4)	U30RT (4) U28ART (4)	White	17 or 298	2-1/16"
YAZ30-2N				1/2"	1-3/4"	1.20"	2.00"	0.16"	5.60"							
YAZ31-2TC14E2	1	350 kcmil	185	1/4"	3/4"	1.29"	2.00"	0.18"	4.02"		W31VT (4)	W31VT (4) W31RT (4)	U31RT (4) U29ART (4)	Red	18 or 324	2-1/16"
YAZ31-2TC38				3/8"	1"	1.29"	2.00"	0.18"	4.45"							
YAZ31-2N				1/2"	1-3/4"	1.29"	2.00"	0.18"	5.64"							
YAZ32-2TC38	1	400 kcmil	—	3/8"	1"	1.40"	2.12"	0.19"	4.62"		W32VT (4)	W32VT (4) W32RT (4)	U32RT (4) U30ART (4)	Blue	19 or 470	2-3/16"
YAZ32-2N				1/2"	1-3/4"	1.40"	2.12"	0.19"	5.81"							

▲ See tooling section of this catalog for complete tool and die listings

* Use PUADP-1 adaptor with U dies in Y46 HYPRESS™

** P-RT die sets for use in Y46 HYPRESS™ only, PUADP-1 adapter not required

*** The MM² conductor sizes listed are the recommendations for Class 2 conductor.

† The MM² conductor size referred to here is for Class 2 and Class 5 conductor.

Available undrilled. Add suffix U to catalog number (example: YA25U).

♦ For applications greater than 2000 Volts consult cable manufacturer for voltage stress relief instructions.

Note: All dimensions shown are for reference only.

Blue highlighted items are industry standard and most frequently ordered.

TWO HOLE HYLUG™ CODE CONDUCTOR LONG BARREL WITH INSPECTION WINDOW (Continued)

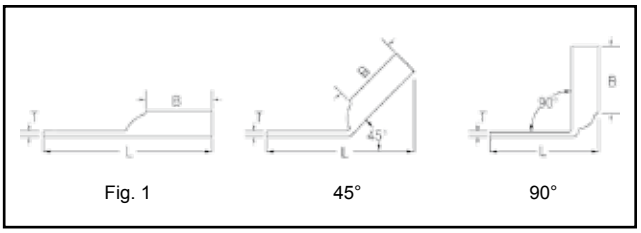

UL Listed 90° C,
600 Volts to 35kV ♦

45° and 90° angles are available.
Please contact Customer Service to order:
1-800-346-4175

Catalog Number	Fig #	Conductor AWG	Conductor *** MM²	Stud Hole Size	Stud Hole Spacing	Tongue Width	Figure Dimensions (B)	Figure Dimensions (T)	Figure Dimensions (L)	▲ Installation Tooling: Dieless (# of crimps)	▲ Installation Tooling: Mechanical MD6, OUR840, MD7-34R	▲ Installation Tooling: Hydraulic BCT500HS, Y500CTHS	▲ Installation Tooling: Hydraulic Y35, Y39 Y750, Y46* PAT750	Color Code	Die Index	Wire Strip Length
YAZ33-2N	1	450 kcmil	—	1/2"	1-3/4"	1.48"	2.12"	0.21"	5.89"	Y644HSXT (1) Y81KFT (4) Y81KFTMBH (4) PAT81KFT-18V (4)	W33VT (4)	W33VT (4) W33RT (4)	U33RT (4)	Gray	326 or 538	2-5/16″
YAZ34-2TC14E2	1	500 kcmil	240	1/4"	3/4"	1.55"	2.25"	0.23"	4.42"		W34VT (4)	W34VT (4) W34RT (4)	U34RT (4) U31ART (4)	Brown	20 or 299	2-5/16″
YAZ34-2TC38				3/8"	1"	1.55"	2.25"	0.23"	4.85"							
YAZ34-2N				1/2"	1-3/4"	1.55"	2.25"	0.23"	6.04"							
YAZ35-2N	1	550 kcmil	—	1/2"	1-3/4"	1.65"	2.62"	0.25"	6.45"		—	—	U35RT (4)	Yellow	21	2-11/16"
YAZ36-2TC38	1	600 kcmil	300	3/8"	1"	1.74"	2.69"	0.26"	5.55"		—	—	U36RT (4) U32ART (4)	Green	22 or 472	2-3/4″
YAZ36-2N				1/2"	1-3/4"	1.74"	2.69"	0.26"	6.55"							
YAZ37-2N	1	650 kcmil	—	1/2"	1-3/4"	1.80"	2.81"	0.27"	6.70"		—	—	U37RT (4)	Orange	23	2-7/8″
YAZ38-2N	1	700 kcmil	—	1/2"	1-3/4"	1.84"	2.81"	0.27"	6.72"		—	—	U38RT (4)	Pink	400	2-7/8″
YAZ39-2NT38	1	750 kcmil	—	3/8"	1"	1.63"	2.88"	0.27"	5.82"		—	—	U39RT (4) P39RT (4)**	Black	24	2-15/16″
YAZ39-2TC38				3/8"	1"	1.91"	2.88"	0.27"	5.82"							
YAZ39-2N				1/2"	1-3/4"	1.91"	2.88"	0.27"	6.82"							
YAZ39-2NNT				1/2"	1-3/4"	1.63"	2.88"	0.27"	6.82"							
YAZ40-2N	1	800 kcmil	400	1/2"	1-3/4"	1.98"	2.94"	0.30"	6.89"		—	—	P40RT (4)**	Orange	25	3″
YAZ41-2N	1	850 kcmil	—	1/2"	1-3/4"	2.01"	2.94"	0.31"	6.91"		—	—	—	Gold	26	3″
YAZ44-2TC38	1	1000 kcmil	500	3/8"	1"	2.19"	3.00"	0.33"	6.09"		—	—	P44RT (4) **	White	27	3-1/16″
YAZ44-2N				1/2"	1-3/4"	2.19"	3.00"	0.33"	7.08"							
YAZ45-2N	—	1250 kcmil	—	1/2"	1-3/4"	2.46"	3.19"	0.38"	7.38"	—	—	—	P45RT (6) **	Yellow	29	3-1/4″
YAZ453-2N	—	1300 kcmil	—	1/2"	1-3/4"	2.53"	3.19"	0.39"	7.41"		—	—	—	Orange	30	2-1/16″
YAZ46-2N	—	1500 kcmil	—	1/2"	1-3/4"	2.69"	3.19"	0.40"	7.48"		—	—	P46RT (6) **	Green	31	3-5/16″
YAZ47-2N	—	1750 kcmil	—	1/2"	1-3/4"	2.90"	3.44"	0.42"	7.82"		—	—	—	Gray	33	3-1/2″
YAZ48-2N	—	2000 kcmil	—	1/2"	1-3/4"	3.10"	3.44"	0.46"	7.89"		—	—		Brown	34	3-1/2″

▲ See tooling section of this catalog for complete tool and die listings

* Use PUADP-1 adaptor with U dies in Y46 HYPRESS™

** P-RT die sets for use in Y46 HYPRESS™ only, PUADP-1 adapter not required

*** The MM² conductor sizes listed are the recommendations for Class 2 conductor

† The MM² conductor size referred to here is for Class 2 and Class 5 conductor

Available undrilled. Add suffix U to catalog number (example: YA25U)

♦ For applications greater than 2000 Volts consult cable manufacturer for voltage stress relief instructions

Note: All dimensions shown are for reference only

Blue highlighted items are industry standard and most frequently ordered.

FOUR HOLE HYLUG™ CODE CONDUCTOR

TYPE YA

UL Listed 90° C,
600 Volts to 35kV

45° and 90° angles are available.
Please contact Customer Service to order:
1-800-346-4175

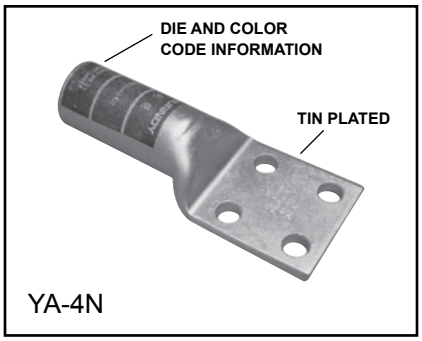

YA-4N

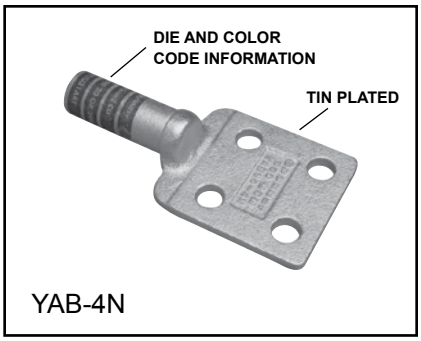

YAB-4N

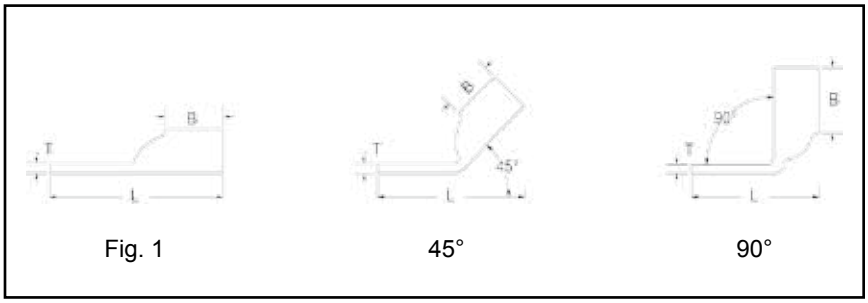

Fig. 1 45° 90°

Catalog Number	Fig. #	Conductor AWG	Conductor *** MM²	Stud Hole Size	Stud Hole Spacing	Tongue Width	Tongue Angle	Installation Tooling: Barrel Length	Tongue Thickness	Length (Total)	Hydraulic (Y35, Y39, Y750 Y46*) * **	Color Code	Die Index	Wire Strip Length
YAB344N ▲	1	500 kcmil	—	1/2"	1.75"	3.00"	Straight	2.25"	0.25"	6.33"	U34RT	Brown	20	2-5/16"
YAB364N ▲	1	600 kcmil	—	5/8"	1.75"	3.00"	Straight	2.69"	0.25"	6.79″	U36RT	Green	22 or 472	2-3/4″
YAB394N ▲	1	750 kcmil	—	1/2"	1.75"	3.00"	Straight	2.88"	0.25"	7.15"	U39RT	Black	24	2-15/16"
YA444N	1	1000 kcmil	500	1/2"	1.75"	3.00"	Straight	3.00"	0.23"	7.14"	P44RT	White	27	3-1/16"
YA454N	1	1250 kcmil	—	1/2"	1.75"	3.00"	Straight	3.19"	0.30"	7.44"	P45RT	Yellow	29	3-1/4"
YA464N	1	1500 kcmil	—	1/2"	1.75"	3.00"	Straight	3.19"	0.34"	7.55"	P46RT	Green	31	3-1/4"
YA474N	1	1750 kcmil	—	1/2"	1.75"	2.90"	Straight	3.44"	0.42"	6.13"	‡L47RT	Gray	33	3-1/2"
YA484N	1	2000 kcmil	—	1/2"	1.75"	3.10"	Straight	3.44"	0.46"	7.98"	‡L48RT	Brown	34	3-1/2"
YA4864N	1	2500 kcmil	—	1/2"	1.75"	3.46"	Straight	4.69"	0.52"	9.38"	‡L486RT	—	—	4-3/4"

* Use PUADP-1 adaptor with U dies in Y46 HYPRESS™
** P dies for use with Y46 HYPRESS™ only. PUADP-1 adapter not required

*** The MM² conductor sizes listed are for Class 2 conductor. For applications greater than 2000 Volts, consult cable manufacturer for voltage stress relief instructions
Available undrilled. Add suffix U to catalog number (example YA444NU)

‡ Requires Y60BHU HYPRESS™
▲ Not UL Listed
Note: All dimensions shown are for reference only

Blue highlighted items are industry standard and most frequently ordered.

ONE HOLE HYLUG™ FLEX CONDUCTOR STANDARD BARREL

TYPES YA-L, YA-L-FX, YAV, YAV-L-FX

COPPER COMPRESSION TERMINAL

UL Listed 90° C,
600 Volts to 35 kV ♦

45° and 90° angles are available.
Please contact Customer Service to order:
1-800-346-4175

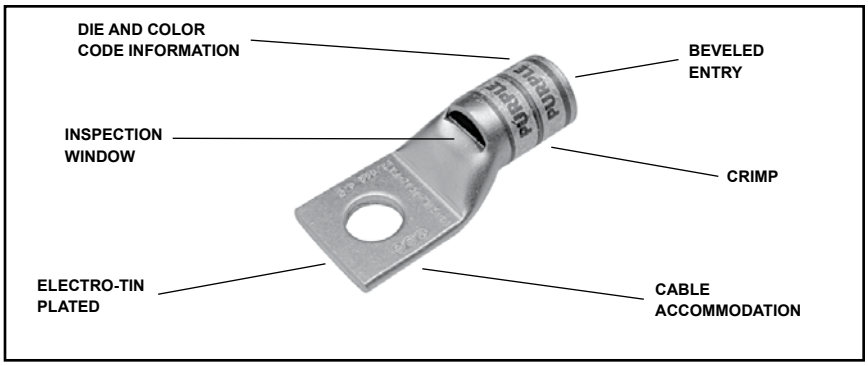

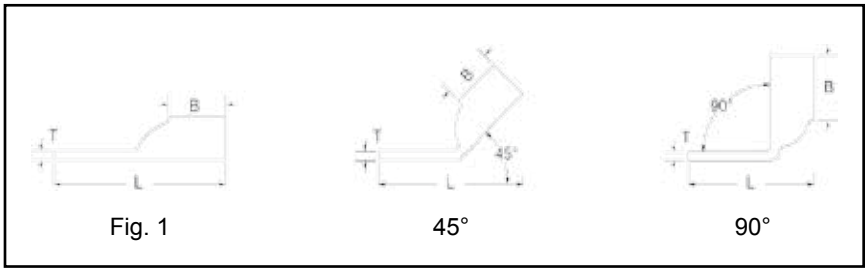

Catalog Number	Fig #	Conductor AWG	Conductor *** MM²	Stud Hole Size	Tongue Width	Figure Dimensions (B)	Figure Dimensions (T)	Figure Dimensions (L)	▲ Installation Tooling: Dieless (# of crimps)	▲ Installation Tooling: Mechanical MD6, OUR840, MD7-34R	▲ Installation Tooling: Hydraulic BCT500HS, Y500CTHS	▲ Installation Tooling: Hydraulic Y35, Y39, Y750, Y46*, PAT750	Color Code	Die Index	Wire Strip Length
YA8CL-BOX	1	#8 Weld 37/24 #8 AWG #6 Sol. #8 Sol.	** 10	#8 - #10	0.41"	0.44"	0.08"	1.16"	Y1MRTC (1) MY29-3 (1) MY29-11 (1) MRC840 (1) Y4PC834(1) Y8MRB-1 (1) Y81KFT (1)	W8CVT 1) W8CRT (1) X8CRT (1)	W8CVT (1) W8CRT (1) X8CRT (1)	U8CRT (1)	Red	49	7/16"
YA8C-L1-BOX				1/4"	0.44"	0.44"	0.08"	1.26"							
YA8C-L2-BOX				5/16"	0.52"	0.44"	0.06"	1.38"							
YA8C-L3-BOX				3/8"	0.58"	0.44"	0.06"	1.51"							
YA8C-L4-BOX				1/2"	0.71"	0.44"	0.05"	1.76"							
YAV6CL-TC10-FX	1	61/24 #6 Weld #6 AWG	** 16	#10	0.48"	0.50"	0.08"	1.30"	Y1MRTC (1) MY29-11 (1) MRC840 (1) Y644HSXT (1) Y81KFT (1)	W5CVT (1) W5CRT (1) X5CRT (1)	W5CVT (1) W5CRT (1) X5CRT (1)	U5CRT (1)	Blue	7	1/2"
YAV6CL-TC14-FX				1/4"	0.48"	0.50"	0.08"	1.43"							
YAV6CL-TC516-FX				5/16"	0.52"	0.50"	0.07"	1.49"							
YAV6CL-TC38-FX				3/8"	0.58"	0.50"	0.06"	1.61"							
YAV6CL-TC12-FX				1/2"	0.75"	0.50"	0.12"	1.86"							
YAV6CL-TC34-FX				3/4"	1.04"	0.50"	0.09"	2.66"							
YAV4CL-TC10-FX	1	91/24 105/24 #4 Weld #4AWG	—	#10	0.55"	0.50"	0.09"	1.32"	Y1MRTC (2) Y644HSXT (1) MY29-11 (1) Y81KFT (1) PAT4PC834 (1) Y4PC834 (1) PAT81KFT-18V (1)	W4CVT (1) W4CRT (1) X4CRT (1)	W4CVT (1) W4CRT (1) X4CRT (1)	U4CRT (1)	Gray	8	1/2"
YAV4CL-TC14-FX				1/4"	0.55"	0.50"	0.09"	1.44"							
YAV4CL-TC516-FX				5/16"	0.55"	0.50"	0.09"	1.51"							
YAV4CL-TC38-FX				3/8"	0.58"	0.50"	0.08"	1.67"							
YAV4CL-TC12-FX				1/2"	0.71"	0.50"	0.07"	1.92"							
YAV2CL-TC10-FX	1	125/24 150/24 #2 Weld #2 AWG	35	#10	0.68"	0.63"	0.10"	1.50"		W2CVT (1) W2CRT (1) X2CRT (1)	W2CVT (1) W2CRT (1) X2CRT (1)	U2CRT (1)	Brown	10	11/16"
YAV2CL-TC14-FX				1/4"	0.68"	0.63"	0.10"	1.62"							
YAV2CL-TC516-FX				5/16"	0.68"	0.63"	0.10"	1.69"							
YAV2CL-TC38-FX				3/8"	0.68"	0.63"	0.10"	1.81"							
YAV2CL-TC12-FX				1/2"	0.73"	0.63"	0.09"	2.12"							

* Use PUADP-1 adapter with U dies in Y46 HYPRESS™

** The MM² conductor size listed is for both Class 2 and Class 5 conductors

*** The MM² conductor sizes listed are the recommendations for Class 5 conductor

▲ See tooling section of this catalog for complete tool and die listings. Use only color-coded die recommendations for -FX connectors. For nest/indentor system contact factory

♦ For applications greater than 2000 Volts consult cable manufacturer for voltage stress relief instructions

Note: All dimensions shown are for reference only

Blue highlighted items are industry standard and most frequently ordered.

ONE HOLE HYLUG™ FLEX CONDUCTOR STANDARD BARREL (Continued)

UL Listed 90° C,
600 Volts to 35kV ♦

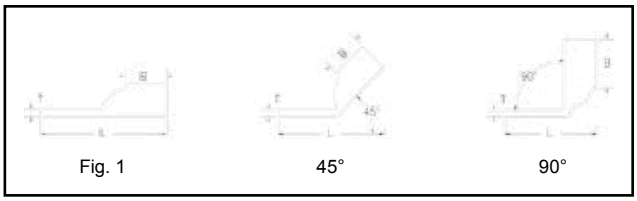

45° and 90° angles are available.
Please contact Customer Service to order:
1-800-346-4175

Catalog Number	Fig #	Conductor AWG	Conductor *** MM²	Stud Hole Size	Tongue Width	Figure Dimensions (B)	Figure Dimensions (T)	Figure Dimensions (L)	▲ Installation Tooling: Dieless (# of crimps)	▲ Installation Tooling: Mechanical MD6, OUR840, MD7-34R	▲ Installation Tooling: Hydraulic BCT500HS, Y500CTHS	▲ Installation Tooling: Hydraulic Y35, Y39 Y750, Y46* PAT750	Color Code	Die Index	Wire Strip Length
YAV1CL-TC10-FX	1	175/24 225/24 #1 Weld #1 AWG	—	#10	0.75"	0.62"	0.12"	1.52"	Y644HSXT (1) MY29-11 (1) PAT644XT-18V (1) Y81KFT (1) PAT4PC834 (1) Y4PC834 (1) PAT81KFT (1)	W1CVT (1) W1CRT-1 (1) X1CRT-1 (1)	W1CVT (1) W1CRT-1 (1) X1CRT-1 (1)	U1CRT-1 (1)	Green	11	11/16"
YAV1CL-TC14-FX				1/4"	0.75"	0.62"	0.12"	1.65"							
YAV1CL-TC516-FX				5/16"	0.75"	0.62"	0.12"	1.71"							
YAV1CL-TC38-FX				3/8"	0.75"	0.62"	0.12"	1.84"							
YAV1CL-TC12-FX				1/2"	0.75"	0.62"	0.12"	2.09"							
YAV25L-TC14-FX	1	275/24 1/0 Weld 1/0 AWG	50	1/4"	0.83"	0.69"	0.12"	1.75"		W25VT (2) W25RT (2) X25RT (2)	W25VT (2) W25RT (2) X25RT (2)	U25RT (1)	Pink	12	11/16"
YAV25L-TC516-FX				5/16"	0.83"	0.69"	0.12"	1.81"							
YAV25L-TC38-FX				3/8"	0.83"	0.69"	0.12"	1.94"							
YAV25L-TC12-FX				1/2"	0.83"	0.69"	0.12"	2.19"							
YAV26L-TC10-FX	1	325/24 2/0 Weld 2/0 AWG	70	#10	0.93"	0.81"	0.13"	1.80"		W26VT (2) W26RT (2) X26RT (2)	W26VT (2) W26RT (2) X26RT (2)	U26RT (1)	Black	13	13/16"
YAV26L-TC14-FX				1/4"	0.93"	0.81"	0.13"	1.92"							
YAV26L-TC516-FX				5/16"	0.93"	0.81"	0.13"	1.98"							
YAV26L-TC38-FX				3/8"	0.93"	0.81"	0.13"	2.11"							
YAV26L-TC12-FX				1/2"	0.93"	0.81"	0.13"	2.36"							
YAV26L-TC58-FX				5/8"	0.93"	0.81"	0.13"	2.61"							
YAV26L-TC34-FX				3/4"	1.10"	0.81"	0.11"	2.89"							
YAV27L-TC10-FX	1	450/24 3/0 Weld 3/0 AWG	95	#10	1.03"	1.00"	0.14"	2.03"	Y644HSXT (1) MY29-11 (1) PAT644XT-18V (1) Y81KFT (2) PAT4PC834 (2) Y4PC834 (2) PAT81KFT (2)	W27VT (2) W27RT (2) X27RT (3)	W27VT (2) W27RT (2) X27RT (3)	U27RT (1)	Orange	14	1"
YAV27L-TC14-FX				1/4"	1.03"	1.00"	0.14"	2.15"							
YAV27L-TC516-FX				5/16"	1.03"	1.00"	0.14"	2.21"							
YAV27L-TC38-FX				3/8"	1.03"	1.00"	0.14"	2.34"							
YAV27L-TC12-FX				1/2"	1.03"	1.00"	0.14"	2.59"							
YAV28L-TC14-FX	1	550/24 4/0 Weld 4/0 AWG	** 120	1/4"	1.14"	1.03"	0.15"	2.23"		W28VT (2) W28RT (2) X28RT (3)	W28VT (2) W28RT (2) X28RT (3)	U28RT (1)	Purple	15	1-1/16"
YAV28L-TC516-FX				5/16"	1.14"	1.03"	0.15"	2.29"							
YAV28L-TC38-FX				3/8"	1.14"	1.03"	0.15"	2.42"							
YAV28L-TC12-FX				1/2"	1.14"	1.03"	0.15"	2.67"							
YAV28L-TC58-FX				5/8"	1.14"	1.03"	0.15"	2.92"							
YAV28L-TC34-FX				3/4"	1.14"	1.03"	0.15"	3.11"							
YAV29L-TC14-FX	1	550/24 4/0 Weld	—	1/4"	1.18"	1.03"	0.16"	2.23"		W29VT (2) X29RT (4)	W29VT (2) W29RT (2) X29RT (4)	U29RT (1)	Yellow	16	1-1/16"
YAV29L-TC516-FX				5/16"	1.18"	1.03"	0.16"	2.30"							
YAV29L-TC38-FX				3/8"	1.18"	1.03"	0.16"	2.42"							
YAV29L-TC12-FX				1/2"	1.18"	1.03"	0.16"	2.67"							
YAV29L-TC58-FX				5/8"	1.18"	1.03"	0.16"	2.92"							
YAV29L-TC34-FX				3/4"	1.18"	1.03"	0.16"	3.11"							

* Use PUADP-1 adapter with U dies in Y46 HYPRESS™

** The MM² conductor size listed is for both Class 2 and Class 5 conductors

*** The MM² conductor sizes listed are the recommendations for Class 5 conductor

▲ See tooling section of this catalog for complete tool and die listings. Use only color-coded die recommendations for -FX connectors. For nest/indentor system contact factory

♦ For applications greater than 2000 Volts consult cable manufacturer for voltage stress relief instructions

Note: All dimensions shown are for reference only

Blue highlighted items are industry standard and most frequently ordered.

ONE HOLE HYLUG™ FLEX CONDUCTOR STANDARD BARREL (Continued)

UL Listed 90° C,
600 Volts to 35kV ♦

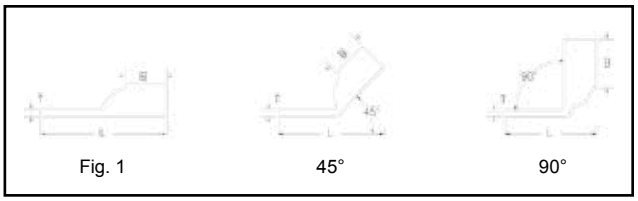

45° and 90° angles are available.
Please contact Customer Service to order:
1-800-346-4175

Catalog Number	Fig #	Conductor AWG	Conductor *** MM²	Stud Hole Size	Tongue Width	Figure Dimensions (B)	Figure Dimensions (T)	Figure Dimensions (L)	▲ Installation Tooling: Dieless (# of crimps)	▲ Installation Tooling: Mechanical MD6, OUR840, MD7-34R	▲ Installation Tooling: Hydraulic BCT500HS, Y500CTHS	▲ Installation Tooling: Hydraulic Y35, Y39, Y750, Y46*, PAT750	Color Code	Die Index	Wire Strip Length
YA30L-TC516-FX	1	250 Flex CLASS G 259 Str. CLASS H 427 Str.	—	5/16"	1.20"	1.03"	0.16"	2.31"	Y644HSXT (1) PAT644XT-18V (1) Y81KFT (2) PAT4PC834 (2) Y4PC834 (2) PAT81KFT (2)	W29VT (2) X29RT (4)	W29VT (2) W29RT (2) X29RT (4)	U29RT (1)	Yellow	16	1-1/8"
YA30L-TC38-FX				3/8"	1.20"	1.03"	0.16"	2.44"							
YA30L-TC12-FX				1/2"	1.20"	1.03"	0.16"	2.69"							
YA30L-TC58-FX				5/8"	1.20"	1.03"	0.16"	2.94"							
YA30L-TC34-FX				3/4"	1.20"	1.03"	0.16"	3.12"							
YA31L-TC14-FX	1	250 Flex 637/24 CLASS I, K, M	150	1/4"	1.29"	1.06"	0.18"	2.31"		W30VT (2)	W30VT (2) W30RT (2)	U30RT (2)	White	17 or 298	1-1/8"
YA31L-TC516-FX				5/16"	1.29"	1.06"	0.18"	2.37"							
YA31L-TC38-FX				3/8"	1.29"	1.06"	0.18"	2.50"							
YA31L-TC12-FX				1/2"	1.29"	1.06"	0.18"	2.75"							
YA31L-NT12-FX				1/2"	0.96"	1.06"	0.18"	2.75"							
YA31L-TC58-FX				5/8"	1.29"	1.06"	0.18"	3.00"							
YA31L-TC34-FX				3/4"	1.29"	1.06"	0.18"	3.19"							
YA32L-TC38-FX	1	313 kcmil 775/24 300 Flex	185	3/8"	1.40"	1.19"	0.19"	2.68"		W31VT (2)	W31VT (2) W31RT (2)	U31RT (2)	Red	18 or 324	1-1/4"
YA32L-TC12-FX				1/2"	1.40"	1.19"	0.19"	2.93"							
YA32L-TC58-FX				5/8"	1.40"	1.19"	0.19"	3.18"							
YA32L-TC100-FX				1"	1.74"	1.19"	0.27"	3.87"							
YA34L-TC516-FX	1	373.7 kcmil 925/24 350 FLEX	240	5/16"	1.55"	1.27"	0.23"	2.74"		W32VT (2)	W32VT (2) W32RT (2)	U32RT (2)	Blue	19 or 470	1-5/16"
YA34L-TC38-FX				3/8"	1.55"	1.27"	0.23"	2.87"							
YA34L-TC12-FX				1/2"	1.55"	1.27"	0.23"	3.12"							
YA34L-TC58-FX				5/8"	1.55"	1.27"	0.23"	3.37"							
YA36L-TC12-FX	1	444.4 kcmil 450 Flex 1100/24	—	1/2"	1.74"	1.38"	0.27"	3.29"		—	—	U34RT (2)	Brown	20 or 299	1-3/8"
YA36L-TC58-FX				5/8"	1.74"	1.38"	0.27"	3.54"							
YA38L-TC516-FX	1	535.3 kcmil 1325/24 500 Flex	300	5/16"	1.84"	1.45"	0.27"	3.03"	Y644HSXT (1) PAT644XT-18V (1) Y81KFT (2) PAT4PC834 (3) Y4PC834 (3) PAT81KFT (3)	—	—	U38XRT (2)	Pink	L99	1-7/16"
YA38L-TC38-FX				3/8"	1.84"	1.45"	0.27"	3.34"							
YA38L-TC12-FX				1/2"	1.84"	1.45"	0.27"	3.41"							
YA38L-TC58-FX				5/8"	1.84"	1.45"	0.27"	3.66"							
YA40L-TC516-FX	1	646 kcmil 1600/24	400	5/16"	1.98"	1.42"	0.30"	3.05"		—	—	U39RT (2)	Black	24	1-7/16"
YA40L-TC38-FX				3/8"	1.98"	1.42"	0.30"	3.38"							
YA40L-TC12-FX				1/2"	1.98"	1.42"	0.30"	3.43"							
YA40L-TC58-FX				5/8"	1.98"	1.42"	0.30"	3.68"							
YA44L-TC12-FX	1	777.7 kcmil 1925/24	500	1/2"	2.19"	1.65"	0.33"	3.79"		—	—	U44XRT (2)	Yellow	L115	1-5/8"
YA44L-TC58-FX				5/8"	2.19"	1.65"	0.33"	4.04"							

* Use PUADP-1 adapter with U dies in Y46 HYPRESS™
** The MM² conductor size listed is for both Class 2 and Class 5 conductors
*** The MM² conductor sizes listed are the recommendations for Class 5 conductor

▲ See tooling section of this catalog for complete tool and die listings. Use only color-coded die recommendations for -FX connectors. For nest/indentor system contact factory.

♦ For applications greater than 2000 Volts consult cable manufacturer for voltage stress relief instructions.

Note: All dimensions shown are for reference only.

Blue highlighted items are industry standard and most frequently ordered.

ONE HOLE HYLUG™ FLEX CONDUCTOR STANDARD BARREL NARROW TONGUE

TYPE YAV-L-NTFX

COPPER COMPRESSION NARROW TONGUE TERMINAL

UL Listed 90° C,
600 Volts to 35 kV ♦

45° and 90° angles are available.
Please contact Customer Service to order:
1-800-346-4175

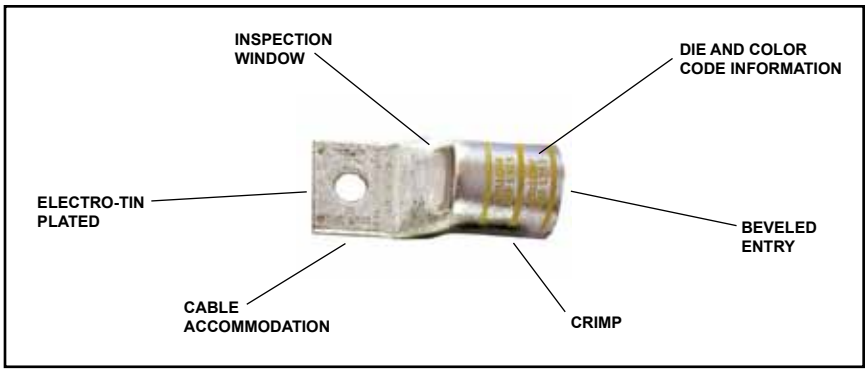

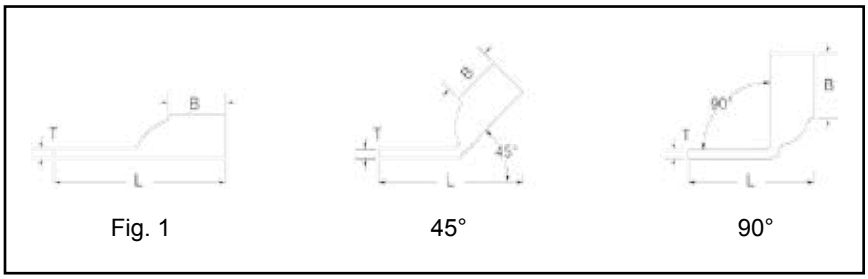

Fig. 1 45° 90°

Catalog Number	Fig #	Conductor AWG	Conductor *** MM²	Stud Hole Size	Tongue Width	Figure Dimensions (B)	Figure Dimensions (T)	Figure Dimensions (L)	Installation Tooling: Dieless (# of crimps)	Installation Tooling: Mechanical MD6, OUR840, MD7-34R	Installation Tooling: Hydraulic BCT500HS, Y500CTHS	Installation Tooling: Hydraulic Y35, Y39 Y750,Y46* PAT750	Color Code	Die Index	Wire Strip Length
YAV4CLNT10FX	1	#4 AWG #4 Weld 91/24 105/24	—	#10	0.41"	0.50"	0.09"	1.32"	Y1MRTC (2) MY29-11 (1) Y81KFT (1) Y81KFTMBH (1) PAT81KFT-18V (1) Y644HSXT (1)	W4CRT (1) W4CVT (1) X4CRT (1)	W4CRT (1) W4CVT (1) X4CRT (1)	U4CRT (1)	Gray	8	1/2"
YAV2CLNT14FX	1	#2 AWG #2 Weld 125/24 150/24	35	1/4"	0.46"	0.63"	0.10"	1.71"		W2CRT (1) W2CVT (1) X2CRT (1)	W2CVT (1) W2CRT (1) X2CRT (1)	U2CRT (1)	Brown	10	11/16"
YAV2CLNT516FX				5/16"	0.44"	0.63"	0.10"	1.78"							
YAV25LNT14FX	1	1/0 AWG 1/0 Weld 275/24	50	1/4"	0.67"	0.69"	0.12"	1.75"	MY29-11 (1) Y644HSXT (1) Y81KFT (1) Y81KFTMBH (1) PAT81KFT-18V (1)	W25VT (2) W25RT (2) X25RT (2)	W25VT (2) W25RT (2) X25RT (2)	U25RT (1)	Pink	12	11/16"
YAV25LNT516FX				5/16"	0.67"	0.69"	0.12"	1.81"							
YAV25LNT38FX				3/8"	0.76"	0.69"	0.13"	1.94"							
YAV26LNT516FX	1	2/0 AWG 2/0 Weld 325/24	70	5/16"	0.90"	0.81"	0.13"	1.98"		W26VT (2) W26RT (2) X26RT (2)	W26VT (2) W26RT (2) X26RT (2)	U26RT (1)	Black	13	13/16"
YAV26LNT38FX				3/8"	0.90"	0.81"	0.13"	2.11"							
YAV26LNT12FX				1/2"	0.87"	0.81"	0.13"	2.36"							
YAV27LNT12FX	1	3/0 AWG 3/0 Weld 450/24	—	1/2"	0.76"	1.00"	0.14"	2.59"		W27VT (2) W27RT (2) X27RT (3)	W27VT (2) W27RT (2) X27RT (3)	U27RT (1)	Orange	14	1-1/16"
YAV28LNT516FX	1	4/0 AWG 4/0 Weld 550/24	—	5/16"	0.94"	1.03"	0.15"	2.29"		W28VT (2) W28RT (2) X28RT (3)	W28VT (2) W28RT (2) X28RT (3)	U28RT (1)	Purple	15	1-1/16"
YAV28LNT38FX				3/8"	0.94"	1.03"	0.15"	2.42"							
YAV28LNT12FX				1/2"	0.76"	1.03"	0.15"	2.67"							

Consult cable manufacturers for stress relief instructions

♦ For applications greater than 2000 Volts consult cable manufacturer for voltage stress relief instructions

* Use PUADP-1 adaptor with U dies in Y46 HYPRESS™

*** The MM^2 conductor sizes Listed are the recommendations for CLASS 5 conductor

▲ See tooling section of this catalog for complete tool and die listings. Use ONLY color-coded die recommendations for -FX connectors

Note: All dimensions shown are for reference only.

Blue highlighted items are industry standard and most frequently ordered.

ONE HOLE HYLUG™ FLEX CONDUCTOR STANDARD BARREL NARROW TONGUE (Continued)

UL Listed 90° C,
600 Volts to 35 kV ♦

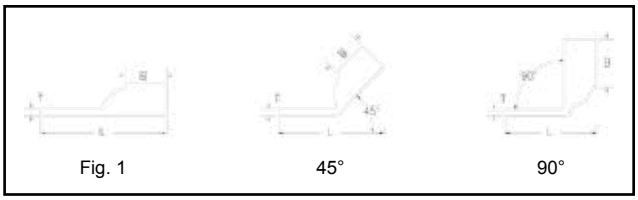

45° and 90° angles are available.
Please contact Customer Service to order:
1-800-346-4175

Catalog Number	Fig #	Conductor AWG	Conductor *** MM²	Stud Hole Size	Tongue Width	Figure Dimensions (B)	Figure Dimensions (T)	Figure Dimensions (L)	Installation Tooling: Dieless (# of crimps)	Installation Tooling: Mechanical MD6, OUR840, MD7-34R	Installation Tooling: Hydraulic BCT500HS, Y500CTHS	Installation Tooling: Hydraulic Y35, Y39 Y750, Y46* PAT750	Color Code	Die Index	Wire Strip Length
YA30LNT516FX	3	250 Flex 637/24	150	5/16"	0.96"	1.03"	0.15"	2.48"	Y644HSXT (1) Y81KFT (2) Y81KFTMBH (2) PAT81KFT-18V (2)	W29VT (2) X29RT (2)	W29VT (2) W29RT (2) X29RT (2)	U29RT (2)	Yellow	16	1-1/8"
YA31L-NT12-FX	1	250 Flex 637/24 CLASS I, K, M	150	1/2"	0.96"	1.06"	0.18"	2.75"	PAT644XT-18V (1) Y81KFT (2) PAT4PC834 (2) Y4PC834 (2) PAT81KFT (2)	W30VT (2)	W30VT (2) W30RT (2)	U30RT (2)	White	17	1-1/8"
YA32LNT516FX	1	313.1 kcmil 775/24 300 Flex	185	5/16"	0.96"	1.19"	0.19"	2.65"	Y644HSXT (1) Y81KFT (2) Y81KFTMBH (2) PAT81KFT-18V (2)	W31VT (2)	W31VT (2) W31RT (2)	U31RT (2)	Red	18	1-1/4"
YA32LNT38FX				3/8"	0.96"	1.19"	0.19"	2.68"							
YA38LNT12FX	1	535.3 kcmil 1325/24 500 Flex	300	1/2"	1.63"	1.45"	0.27"	3.41"		—	—	U38XRT (2)	Pink	L99	1-7/16"
YA38LNTM20FX				M20	1.63"	1.45"	0.27"	3.84"							
YA40LENT12FX	1	646 WELD 1600/24 650 kcmil CLASS B,C,D,G,H,I,K,M	—	1/2"	1.35″	1.42″	0.30″	3.43″	Y644M (1) PAT644 (1) Y81KFT (2) PAT81KFT (3) Y4PC834 (3) PAT4PC834 (3)	—	—	U39RT (2)	Black	24	1-5/16"
YA44LNT38FX	1	777.7 kcmil 1925/24 750 Flex	500	3/8"	1.50"	1.65"	0.33"	3.79"	Y644HSXT (1) Y81KFT (2) Y81KFTMBH (2) PAT81KFT-18V (2)	—	—	U44XRT (2)	Yellow	L115	1-5/8"
YA44LNT12FX				1/2"	1.62"	1.65"	0.33"	3.98"							

Consult cable manufacturers for stress relief instructions
♦ For applications greater than 2000 Volts consult cable manufacturer for voltage stress relief instructions
* Use PUADP-1 adaptor with U dies in Y46 HYPRESS™

*** The MM^2 conductor sizes Listed are the recommendations for CLASS 5 conductor
▲ See tooling section of this catalog for complete tool and die listings. Use ONLY color-coded die recommendations for -FX connectors.

Note: All dimensions shown are for reference only.

Blue highlighted items are industry standard and most frequently ordered.

ONE HOLE HYLUG™ FLEX CONDUCTOR STANDARD BARREL NO INSPECTION WINDOW

TYPE YAG-L-TC COPPER COMPRESSION TERMINAL

UL Listed 90° C,
600 Volts to 35 kV

45° and 90° angles are available.
Please contact Customer Service to order:
1-800-346-4175

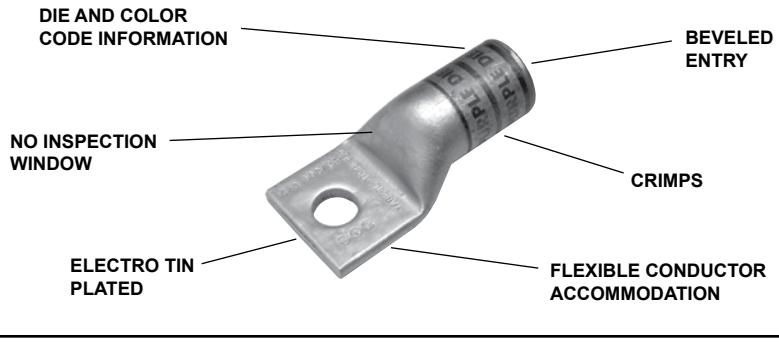

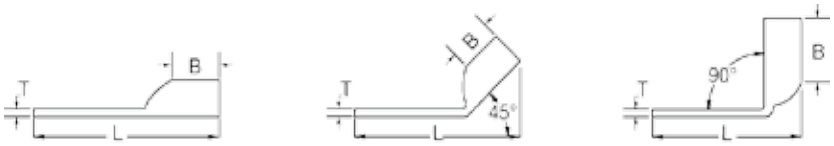

Fig. 1 45° 90°

Catalog Number	Fig #	Conductor AWG	Conductor *** MM²	Stud Hole Size	Tongue Width	Figure Dimensions (B)	(T)	(L)	▲ Installation Tooling: Dieless (# of crimps)	Mechanical: MD6, OUR840, MD7-34R	Hydraulic: BCT500HS, Y500CTHS	Hydraulic: Y35, Y39, Y750 Y46*, PAT750	Color Code	Die Index	Wire Strip Length
YAG8CLTC14FX	1	37/24 #8 Weld #8 Sol #8 AWG	10	1/4″	0.44″	0.44″	0.08″	1.32″	MY29-11 (1) Y1MRTC (1) Y81KFT (1) Y81KFTMBH (1) PAT81KFT-18V (1)	W8CVT (1) W8CRT (1) X8CRT (1)	W8CVT (1) W8CRT (1) X8CRT (1)	U8CRT (1)	Red	49	1/2″
YAG8CLTC516FX				5/16″	0.52″	0.44″	0.06″	1.38″							
YAG8CLTC12FX				1/2″	0.71″	0.44″	0.05″	1.76″							
YAG6CLTC14FX	1	61/24 #6 Weld #6 AWG	16	1/4″	0.48″	0.50″	0.08″	1.43″		W5CVT (1) W5CRT (1) X5CRT (1)	W5CVT (1) W5CRT (1) X5CRT (1)	U5CRT (1)	Blue	7	1/2″
YAG6CLTC516FX				5/16″	0.52″	0.50″	0.07″	1.49″							
YAG6CLTC38FX				3/8″	0.58″	0.50″	0.06″	1.61″							
YAG6CLTC12FX				1/2″	0.75″	0.50″	0.12″	1.86″							
YAG4CLTC14FX	1	91/24 105/24 #4 AWG #4 Weld	—	1/4″	0.55″	0.50″	0.09″	1.48″	MY29-11 (1) Y1MRTC (2) Y81KFT (1) Y81KFTMBH (1) PAT81KFT-18V (1) Y644HSXT (1)	W4CVT (1) W4CRT (1) X4CRT (1)	W4CVT (1) W4CRT (1) X4CRT (1)	U4CRT (1)	Gray	8	1/2″
YAG4CLTC516FX				5/16″	0.55″	0.50″	0.09″	1.55″							
YAG4CLTC38FX				3/8″	0.58″	0.50″	0.08″	1.67″							
YAG4CLTC12FX				1/2″	0.71″	0.50″	0.07″	1.92″							
YAG2CLTC14FX	1	#2 AWG #2 Weld 125/24 150/24	35	1/4″	0.68″	0.63″	0.10″	1.64″		W2CVT (1) W2CRT (1) X2CRT (1)	W2CVT (1) W2CRT (1) X2CRT (1)	U2CRT (1)	Brown	10	11/16″
YAG2CLTC516FX				5/16″	0.68″	0.63″	0.10″	1.70″							
YAG2CLTC38FX				3/8″	0.68″	0.63″	0.10″	1.83″							
YAG2CLTC12FX				1/2″	0.73″	0.63″	0.09″	2.12″							
YAG1CLTC14FX	1	#1 AWG #1 Weld 175/24 225/24	—	1/4″	0.75″	0.62″	0.12″	1.67″	MY29-11(1) Y644HSXT (1) Y81KFT (1) Y81KFTMBH (1) PAT81KFT-18V (1)	W1CVT (1) W1CRT-1 (1) X1CRT-1 (1)	W1CVT (1) W1CRT-1 (1) X1CRT-1 (1)	U1CRT-1 (1)	Green	11	11/16″
YAG1CLTC516FX				5/16″	0.75″	0.62″	0.12″	1.73″							
YAG1CLTC38FX				3/8″	0.75″	0.62″	0.12″	1.86″							
YAG1CLTC12FX				1/2″	0.75″	0.62″	0.12″	2.11″							
YAG25LTC14FX	1	1/0 AWG 1/0 Weld 225/24	50	1/4″	0.83″	0.69″	0.12″	1.77″		W25CVT (2) W25CRT (2) X25CRT (2)	W25VT (2) W25RT (2) X25RT (2)	U25RT (1)	Pink	12	11/16″
YAG25LTC516FX				5/16″	0.83″	0.69″	0.12″	1.84″							
YAG25LTC38FX				3/8″	0.83″	0.69″	0.12″	1.96″							
YAG25LTC12FX				1/2″	0.83″	0.69″	0.12″	2.21″							
YAG26LTC14FX	1	2/0 AWG 2/0 Weld 325/24	70	1/4″	0.93″	0.81″	0.13″	1.95″		W26VT (2) W26RT (2) X26RT (2)	W26VT (2) W26RT (2) X26RT (2)	U26RT (1)	Black	13	13/16″
YAG26LTC516FX				5/16″	0.93″	0.81″	0.13″	2.01″							
YAG26LTC38FX				3/8″	0.93″	0.81″	0.13″	2.13″							
YAG26LTC12FX				1/2″	0.93″	0.81″	0.13″	2.38″							
YAG27LTC14FX	1	3/0 AWG 3/0 Weld 450/24	95	1/4″	1.03″	1.00″	0.14″	2.18″		W27VT (2) W27RT (2) X27RT (3)	W27VT (2) W27RT (2) X27RT (3)	U27RT (1)	Orange	14	1″
YAG27LTC516FX				5/16″	1.03″	1.00″	0.14″	2.24″							
YAG27LTC38FX				3/8″	1.03″	1.00″	0.14″	2.37″							
YAG27LTC12FX				1/2″	1.03″	1.00″	0.14″	2.62″							

* Use PUADP-1 adapter with U dies in Y46 HYPRESS™

** The MM² conductor size referenced here is for Class 5 conductor

▲ See tooling section of this catalog for complete tool and die listings

Note: All dimensions shown are for reference only.

Blue highlighted items are industry standard and most frequently ordered.

ONE HOLE HYLUG™ FLEX CONDUCTOR STANDARD BARREL NO INSPECTION WINDOW (Continued)

UL Listed 90° C,
600 Volts to 35 kV

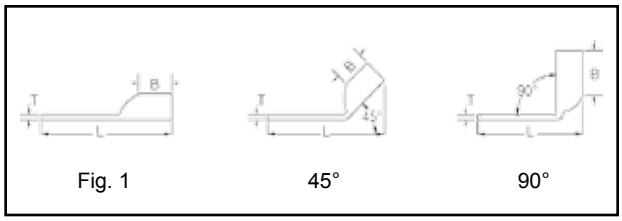

Fig. 1 45° 90°

45° and 90° angles are available.
Please contact Customer Service to order:
1-800-346-4175

Catalog Number	Fig #	Conductor AWG	Conductor ** MM²	Stud Hole Size	Tongue Width	Figure Dimensions (B)	Figure Dimensions (T)	Figure Dimensions (L)	▲ Installation Tooling: Dieless (# of crimps)	Mechanical: MD6, OUR840, MD7-34R	Hydraulic: BCT500HS, Y500CTHS	Hydraulic: Y35, Y39 Y750, Y46* PAT750	Color Code	Die Index	Wire Strip Length
YAG28LTC14FX	1	4/0 AWG 4/0 Weld 550/24	—	1/4″	1.14″	1.03″	0.15″	2.26″	MY29-11 (1) Y644HSXT (1) Y81KFT (1) Y81KFTMBH (1) PAT81KFT-18V (1)	W28VT (2) W28RT (2) X28RT (3)	W28VT (2) W28RT (2) X28RT (3)	U28RT (1)	Purple	15	1-1/16″
YAG28LTC516FX				5/16″	1.14″	1.03″	0.15″	2.32″							
YAG28LTC38FX				3/8″	1.14″	1.03″	0.15″	2.45″							
YAG28LTC12FX				1/2″	1.14″	1.03″	0.15″	2.70″							
YAG29LTC38FX	1	4/0 Weld 550/24	—	3/8″	1.18″	1.03″	0.16″	2.45″	Y644HSXT (1) Y81KFT (1) Y81KFTMBH (1) PAT81KFT-18V (1)	W29VT (2) X29RT (4)	W29VT (2) W29RT (2) X29RT (4)	U29RT (1)	Yellow	16	1-1/16″
YAG29LTC12FX				1/2″	1.18″	1.03″	0.16″	2.70″							
YAG29LTC58FX				5/8″	1.18″	1.03″	0.16″	2.95″							
YAG30LTC38FX	1	250 Flex Class G 259 Str. Class H 427 Str.	—	3/8″	1.20″	1.03″	0.16″	2.47″	MY29-11 (1) Y644HSXT (1) Y81KFT (1) Y81KFTMBH (1) PAT81KFT-18V (1)	W29VT (2) X29RT (4)	W29VT (2) W29RT (2) X29RT (4)	U29RT (1)	Yellow	16	1-1/16″
YAG30LTC12FX				1/2″	1.20″	1.03″	0.16″	2.72″	Y644HSXT (1) Y81KFT (1) Y81KFTMBH (1) PAT81KFT-18V (1)						
YAG30LTC58FX				5/8″	1.20″	1.03″	0.16″	2.97″							
YAG31LTC14FX	1	250 Flex 637/24 Class I,K,M	150	1/4″	1.29″	1.06″	0.18″	2.35″	Y644HSXT (1) Y81KFT (1) Y81KFTMBH (1) PAT81KFT-18V (1)	W30VT (2)	W30VT (2) W30RT (2)	U30RT (2)	White	17	1-1/8″
YAG31LTC516FX				5/16″	1.29″	1.06″	0.18″	2.41″							
YAG31LTC38FX				3/8″	1.29″	1.06″	0.18″	2.53″							
YAG31LTC12FX				1/2″	1.29″	1.06″	0.18″	2.78″							
YAG31LTC58FX				5/8″	1.29″	1.06″	0.18″	3.03″							
YAG32LTC12FX	1	313.1 kcmil 775/24 300 Flex	185	1/2″	1.40″	1.19″	0.19″	2.97″		W31VT (2)	W31VT (2) W31RT (2)	U31RT (2)	Red	18	1-1/4″
YAG32LTC58FX				5/8″	1.40″	1.19″	0.19″	3.22″							
YAG34LTC516FX	1	373.3 kcmil 925/24 350 Flex	240	5/16″	1.55″	1.27″	0.23″	2.78″		W32VT (2)	W32VT (2) W32RT (2)	U32RT (2)	Blue	19	1-5/16″
YAG34LTC38FX				3/8″	1.55″	1.27″	0.23″	2.91″							
YAG34LTC12FX				1/2″	1.55″	1.27″	0.23″	3.16″							
YAG34LTC58FX				5/8″	1.55″	1.27″	0.23″	3.41″							
YAG36LTC38FX	1	444.4 kcmil 1100/24 450 Flex	—	3/8″	1.73″	1.38″	0.27″	3.27″		—	—	U34RT (2)	Brown	20	1-3/8″
YAG38LTC516FX	1	535.5 kcmil 1325/24 500 Flex	300	5/16″	1.84″	1.45″	0.27″	3.08″				U38XRT (2)	Pink	L99	1-7/16″
YAG38LTC38FX				3/8″	1.84″	1.45″	0.27″	3.39″							
YAG38LTC12FX				1/2″	1.84″	1.45″	0.27″	3.46″							
YAG40LTC14FX	1	646 kcmil 1600/24 650 Flex	400	1/4″	1.96″	1.42″	0.30″	3.04″	Y644HSXT (1) Y81KFT (2) Y81KFTMBH (2) PAT81KFT-18V (2)			U39RT (2)	Black	24	1-5/16″
YAG40LTC516FX				5/16″	1.96″	1.42″	0.30″	3.11″							
YAG40LTC38FX				3/8″	1.96″	1.42″	0.30″	3.42″							
YAG40LTC12FX				1/2″	1.96″	1.42″	0.30″	3.48″							
YAG44LTC516FX	1	777.7 kcmil 1925/24 750 Flex	500	5/16″	2.18″	1.65″	0.33″	3.81″				U44XRT (2)	Yellow	L115	1-5/8″
YAG44LTC38FX				3/8″	2.18″	1.65″	0.33″	3.81″							
YAG44LTC12FX				1/2″	2.18″	1.65″	0.33″	3.85″							

* Use PUADP-1 adapter with U dies in Y46 HYPRESS™

** The MM² conductor size referenced here is for Class 5 conductor

▲ See tooling section of this catalog for complete tool and die listings

Note: All dimensions shown are for reference only.

Blue highlighted items are industry standard and most frequently ordered.

ONE HOLE HYLUG™ FLEX CONDUCTOR STANDARD BARREL BELLED END

TYPE YA-LB

COPPER COMPRESSION TERMINAL

UL Listed 90° C,

600 Volts to 35kV ♦

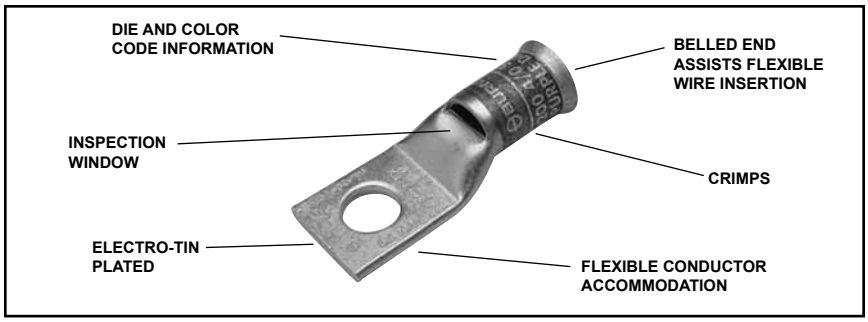

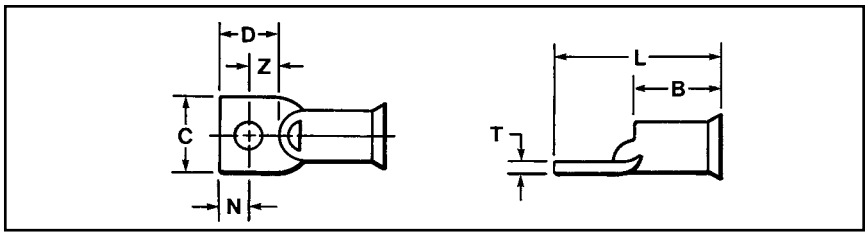

Catalog Number	Flexible Conductor Size AWG/kcmil	Stranding Class (Size of Strand) Number of Strands: G	H	I (#24 Str.)	Battery Cable K (#30 Str.)	Welding Cable M (#34 Str.)	Locomotive Cable	Bolt Hole Size	Wire Strip Length	Installation Tooling: Dieless (# of crimps)	Die Index	Dimensions B	L
YA8C-LB	8	49	133	41	168	420	37/24	#10	7/16"	Y81KFT (1) Y81KFTMBH (1) PAT81KFT-18V (1)	1013	0.41"	1.12"
YA5C-LB	6			63	266	665	61/24	1/4"	7/8"		1014	0.44"	1.73"
YA4C-LB	5			84	336	836	91/24				1015	0.50"	1.73"
YA3C-LB	4			105	420	1064	105/24	5/16"	15/16"		1016	0.55"	1.94"
YA2C-LB	3			133	532	1323	125/24				1017	0.61"	1.97"
YA1C-LB	2			161	665	1666	150/24				1018	0.68"	2.02"
YA25-LB	1	133	259	210	836	2107	225/24				1019	0.75"	2.26"
YA26-LB	1/0			266	1064	2646	275/24	3/8"	1"		1020	0.83"	2.61"
YA27-LB	2/0			342	1323	3325	325/24	1/2"	1-1/16"		1021	0.91"	2.67"
YA28-LB	3/0			418	1666	4256	450/24				1022	1.02"	2.77"
YA29-LB	4/0			—	—	—	—				1023	1.11"	2.82"
YA30-LB	4/0	—	—	532	2107	5320	550/24		1-1/8"		1024	1.20"	2.93"
	250	259	427	—	—	—	—						
YA31-LB	250	—	—	—	—	—	—		1-3/16"		1025	1.29"	3.31"
	262.2	—	—	637	2499	6384	650/24						
YA32-LB	300	259	427	735	2989	7851	—	5/8"	1 1/4"		1026	1.40"	3.56"
	313.1	—	—	—	—	—	775/24						
YA34-LB	350	—	—	—	3458	8806	—		1-7/16"		1027	1.52"	3.83"
	373.7	—	—	—	—	—	925/24						
	400	259	427	980	—	—	—						
YA36-LB	444.4	—	—	—	—	—	1100/24		1-3/4"		1028	1.69"	4.31"
	450	—	—	1127	4522	11396	—						
YA38-LB	500	—	—	—	—	12691	—		1-15/16"		1029	1.81"	4.27"
	535.3	—	—	—	—	—	1325/24						
	550	427	703	1372	5054	—	—						
YA39-LB	600	—	—	—	—	13664	—			Y81KFT (2) Y81KFTMBH (2) PAT81KFT-18V (2)	1030	1.89"	4.27"
		427	—	—	—	—	—						
YA40-LB	—	—	703	1470	—	14945	1600/24				1031	1.95"	4.27"
YA44-LB	—	—	—	—	5985	—	—				1032	2.17"	4.5"
	650	—	—	1596	—	—	—						
	750	427	703	—	—	—	—						
	777.7	—	—	—	—	—	1925/24						

Note: All dimensions shown are for reference only.

Blue highlighted items are industry standard and most frequently ordered.

ONE HOLE HYLUG™ FLEX CONDUCTOR LONG BARREL WITH INSPECTION WINDOW

TYPES YAZ, YAZV

COPPER COMPRESSION TERMINAL

UL Listed 90° C,
600 Volts to 35kV ♦

45° and 90° angles are available.
Please contact Customer Service to order:
1-800-346-4175

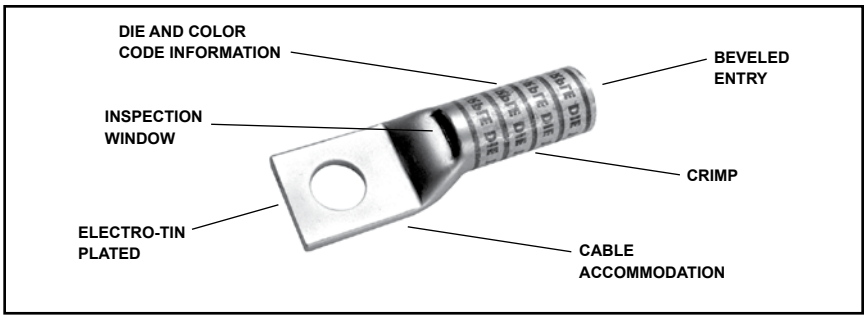

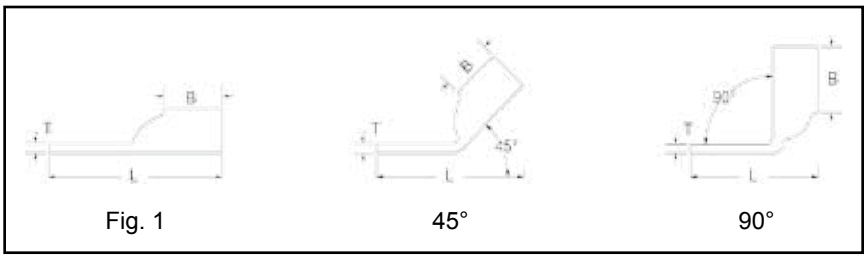

Fig. 1 45° 90°

Catalog Number	Fig #	Conductor AWG	Conductor *** MM²	Stud Hole Size	Tongue Width	Figure Dimensions (B)	(T)	(L)	▲ Installation Tooling: Dieless (# of crimps)	Mechanical: MD6, OUR840, MD7-34R	Hydraulic: BCT500HS, Y500CTHS	Hydraulic: Y35, Y39 Y750, Y46* PAT750	Color Code	Die Index	Wire Strip Length
YAZ8CTC10	1	#8 AWG #8 Weld 37/24 #6 Sol #8 Sol	10	#10	0.41"	0.75"	0.08"	1.43"	Y1MRTC (2) MY29-3 (2) MY29-11 (2) MRC840 (2) Y644HSXT (1) Y81KFT (1) Y81KFTMBH (1) PAT81KFT-18V (1)	W8CVT (2) W8CRT (2) X8CRT (2)	W8CVT (2) W8CRT (2) X8CRT (2)	U8CRT (2)	Red	49	13/16"
YAZ8CTC14				1/4"	0.44"	0.75"	0.08"	1.56"							
YAZ8CTC38				3/8"	0.58"	0.75"	0.06"	1.75"							
YAZV6CTC14FX	1	61/24 #6 Weld #6 AWG	** 16	1/4"	0.48"	0.75"	0.08"	1.59"		W5CVT (2) W5CRT (2) X5CRT (2)	W5CVT (2) W5CRT (2) X5CRT (2)	U5CRT (2)	Blue	7 or 374	13/16"
YAZV6CTC38FX				3/8"	0.58"	0.75"	0.06"	1.77"							
YAZV4CTC14FX	1	91/24 105/24 #4 Weld #4 AWG	—	1/4"	0.55"	1.25"	0.09"	2.19"	Y1MRTC (4) MY29-3 (2) MY29-11 (2) MRC840 (2) Y644HSXT (1) Y81KFT (1) Y81KFTMBH (1) PAT81KFT-18V (1)	W4CVT (2) W4CRT (2) X4CRT (2)	W4CVT (2) W4CRT (2) X4CRT (2)	U4CRT (2)	Gray	8 or 346	1-5/16"
YAZV4CTC38FX				3/8"	0.58"	1.25"	0.08"	2.42"							
YAZV2CTC14FX	1	125/24 150/24 #2 Weld #2 AWG	35	1/4"	0.68"	1.38"	0.10"	2.37"		W2CVT (2) W2CRT (2) X2CRT (2)	W2CVT (2) W2CRT (2) X2CRT (2)	U2CRT (2)	Brown	10	1-7/16"
YAZV2CTC38FX				3/8"	0.68"	1.38"	0.10"	2.56"							
YAZV2CTC12FX				1/2"	0.83"	1.38"	0.09"	2.87"							
YAZV1CTC14FX	1	174/24 225/24 #1 Weld #1 AWG	—	1/4"	0.75"	1.38"	0.12"	2.40"	MY29-3 (2) MY29-11 (2) MRC840 (2) Y644HSXT (1) Y81KFT (1) Y81KFTMBH (1) PAT81KFT-18V (1)	W1CVT (2) W1CRT-1 (2) X1CRT-1 (2)	W1CVT (2) W1CRT-1 (2) X1CRT-1 (2)	U1CRT-1 (2)	Green	11 or 375	1-7/16"
YAZV1CTC516FX				5/16"	0.75"	1.38"	0.12"	2.46"							
YAZV1CTC38FX				3/8"	0.75"	1.38"	0.12"	2.59"							

* Use PUADP-1 adapter with U dies in Y46 HYPRESS™

** The MM² conductor size referenced here is for both Class 2 and Class 5 conductor

*** The MM² conductor sizes listed are the recommendations for Class 5 conductor

▲ See tooling section of this catalog for complete tool and die listings. Use ONLY color-coded die recommendations for -FX connectors. For nest/indentor system contact factory

♦ For applications greater than 2000 Volts consult cable manufacturer for voltage stress relief instructions.

Note: All dimensions shown are for reference only.

Blue highlighted items are industry standard and most frequently ordered.

ONE HOLE HYLUG™ FLEX CONDUCTOR LONG BARREL WITH INSPECTION WINDOW (Continued)

UL Listed 90° C,
600 Volts to 35kV ♦

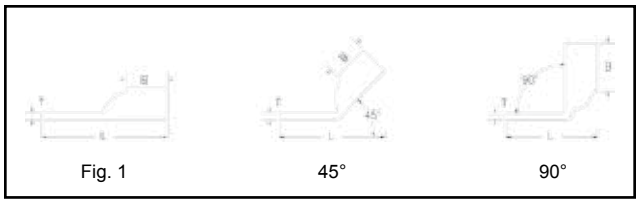

45° and 90° angles are available.
Please contact Customer Service to order:
1-800-346-4175

Catalog Number	Fig #	Conductor AWG	Conductor MM²	Stud Hole Size	Tongue Width	Figure Dimensions (B)	Figure Dimensions (T)	Figure Dimensions (L)	Installation Tooling: Dieless (# of crimps)	Installation Tooling: Mechanical MD6, OUR840, MD7-34R	Installation Tooling: Hydraulic BCT500HS, Y500CTHS	Installation Tooling: Hydraulic Y35, Y39 Y750, Y46 PAT750	Color Code	Die Index	Wire Strip Length
YAZV25TC14FX	1	275/24 1/0 Weld 1/0 AWG	50	1/4"	0.83"	1.50"	0.12"	2.56"	MY29-11 (2) Y644HSXT (1) Y81KFT (2) Y81KFTMBH (2) PAT81KFT-18V (2)	W25VT (4) W25RT (4) X25RT (4)	W25VT (4) W25RT (4) X25RT (4)	U25RT (2)	Pink	12 or 348	1-9/16"
YAZV25TC38FX				3/8"	0.83"	1.50"	0.12"	2.75"							
YAZV25TC12FX				1/2"	0.83"	1.50"	0.12"	3.00"							
YAZV26TC14FX	1	325/24 2/0 Weld 2/0 AWG	70	1/4"	0.93"	1.50"	0.13"	2.61"		W26VT (4) W26RT (4) X26RT (4)	W26VT (4) W26RT (4) X26RT (4)	U26RT (2)	Black	13	1-9/16"
YAZV26TC38FX				3/8"	0.93"	1.50"	0.13"	2.80"							
YAZV26TC12FX				1/2"	0.93"	1.50"	0.13"	3.05"							
YAZV27TC38FX	1	450/24 3/0 Weld 3/0 AWG	95	3/8"	1.03"	1.50"	0.14"	2.84"		W27VT (4) W27RT (4) X27RT (6)	W27VT (4) W27RT (4) X27RT (6)	U27RT (2)	Orange	14	1-9/16"
YAZV28NT38FX	1	550/24 4/0 Weld 4/0 AWG	120	3/8"	0.94"	1.62"	0.14"	3.01"		W28VT (4) W28RT (4) X28RT (4)	W28VT (4) W28RT (4) X28RT (6)	U28RT (2)	Purple	15	1-11/16"
YAZV28TC38FX				3/8"	1.14"	1.62"	0.14"	3.01"							
YAZV28TC12FX				1/2"	1.14"	1.62"	0.14"	3.26"							
YAZV29NT516FX	1	550/24 4/0 Weld	—	5/16"	0.96"	2.00"	0.16"	3.27"		W29VT (4) X29RT (8)	W29VT (4) W29RT (4) X29RT (8)	U29RT (2)	Yellow	16	2-1/16"
YAZ30TC38FX	1	250 Flex CLASS G 259 Str. CLASS H 427 Str.	—	3/8"	1.20"	2.00"	0.16"	3.41"	Y644HSXT (1) Y81KFT (2) Y81KFTMBH (2) PAT81KFT-18V (2)	W29VT (4) X29RT (8)	W29VT (4) W29RT (4) X29RT (8)	U29RT (2)	Yellow	16	2-1/16"
YAZ31TC38FX	1	262.2 Flex 637/24 CLASS I,K,M	150	3/8"	1.28"	2.00"	0.18"	3.44"		W30VT (4)	W30VT (4) W30RT (4)	U30RT (4)	White	17 or 298	2-1/16"
YAZ32TC38FX	1	775/24 313.1 kcmil 300 Flex	185	3/8"	1.55"	2.12"	0.19"	3.61"		W31VT (4)	W31VT (4) W31RT (4)	U31RT (4)	Red	18 or 324	2-3/16"
YAZ34NT38FX	1	925/24 373.3 kcmil 350 Flex	240	3/8"	0.96"	2.25"	0.23"	3.84"		W32VT (4)	W32VT (4) W32RT (4)	U32RT (4)	Blue	19	2-5/16"
YAZ34TC12FX				3/8"	1.52"	2.25"	0.23"	4.09"							
YAZ34TC38FX				1/2"	1.52"	2.25"	0.23"	3.84"							
YAZ36TC38FX	1	1100/24 444.4 kcmil 450 Flex	—	3/8"	1.72"	2.69"	0.26"	4.54"		—	—	U34RT (4)	Brown	20 or 299	2-3/4"
YAZ38NT38FX	1	1325/24 535.3 kcmil 500 Flex	300	3/8"	1.63"	2.81"	0.27"	4.71"		—	—	U38XRT (4)	Pink	L99	2-7/8"
YAZ38TC38FX				3/8"	1.81"	2.81"	0.27"	4.71"							
YAZ38NT12FX				1/2"	1.63"	2.81"	0.27"	4.77"							
YAZ38TC12FX				1/2"	1.81"	2.81"	0.27"	4.77"							

* Use PUADP-1 adapter with U dies in Y46 HYPRESS™

** The MM² conductor size referenced here is for both Class 2 and Class 5 conductor

*** The MM² conductor sizes listed are the recommendations for Class 5 conductor

▲ See tooling section of this catalog for complete tool and die listings. Use ONLY color-coded die recommendations for -FX connectors. For nest/indentor system contact factory.

♦ For applications greater than 2000 Volts consult cable manufacturer for voltage stress relief instructions.

Note: All dimensions shown are for reference only.

Blue highlighted items are industry standard and most frequently ordered.

ONE HOLE HYLUG™ FLEX CONDUCTOR LONG BARREL BELLED END

TYPES YA-TC-FXB, YAV-TC-FXB

UL Listed 90° C,
600 Volts to 35kV ♦

45° and 90° angles are available.
Please contact Customer Service to order:
1-800-346-4175

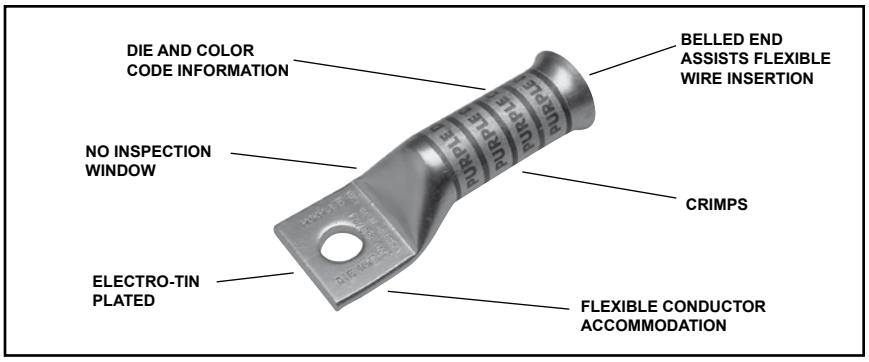

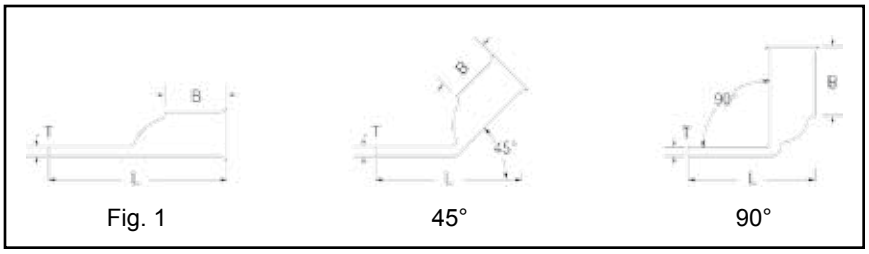

Fig. 1 45° 90°

Catalog Number	Fig #	Conductor AWG	Conductor *** MM²	Stud Hole Size	Tongue Width	Figure Dimensions (B)	Figure Dimensions (T)	Figure Dimensions (L)	▲ Installation Tooling: Dieless (# of crimps)	▲ Installation Tooling: Mechanical MD6, OUR840, MD7-34R	▲ Installation Tooling: Hydraulic BCT500HS, Y500CTHS	▲ Installation Tooling: Hydraulic Y35, Y39 Y750, Y46* PAT750	Color Code	Die Index	Wire Strip Length
YA8C-TC14-FXB	1	37/24 #8 Weld 8 AWG #8 Sol	** 10	1/4"	0.44"	0.90"	0.08"	1.78"	MRC840 (2) MY29-11 (2) Y1MRTC (2) Y81KFT (1) Y81KFTMBH (1) PAT81KFT-18V (1)	W8CVT (2)	W8CVT (2)	U8CRT (2)	Red	49	1"
YAV6C-TC10-FXB	1	61/24 #6 Weld #6 AWG 91/24 #5 Str.	** 16	#8 - #10	0.48"	1.22"	0.08"	2.00"	MY29-11 (2) Y1MRTC (2) Y644HSXT (1) Y81KFT (1) Y81KFTMBH (1) PAT81KFT-18V (1)	W5CVT (2)	W5CVT (2)	U5CRT (2)	Blue	7	1-5/16"
YAV6C-TC14-FXB				1/4"	0.48"	1.22"	0.08"	2.12"							
YA5CTC14FXB	1	#5 AWG	—	1/4"	0.44"	1.22"	0.07"	2.12"							
YAV4C-TC10-FXB	1	91/24 105/24 #4 Weld #4 AWG	—	#8 - #10	0.55"	1.22"	0.09"	2.05"	MY29-11 (2) Y1MRTC (4) Y644HSXT (1) Y81KFT (1) Y81KFTMBH (1) PAT81KFT-18V (1)	W4CVT (2)	W4CVT (2)	U4CRT (2)	Gray	8	1-5/16"
YAV4C-TC14-FXB				1/4"	0.55"	1.22"	0.09"	2.17"							
YAV4C-TC516-FXB				5/16"	0.55"	1.22"	0.09"	2.24"							
YAV2C-TC10-FXB	1	125/24 150/24 #2 Weld #2 AWG	35	#8 - #10	0.68"	1.35"	0.10"	2.24"		W2CVT (2)	W2CVT (2)	U2CRT (2)	Brown	10	1-7/16"
YAV2C-TC516-FXB				5/16"	0.68"	1.35"	0.10"	2.43"							
YAV1C-TC10-FXB	1	175/24 225/24 #1 Weld #1AWG	—	#8 - #10	0.75"	1.50"	0.12"	2.41"	MY29-11 (2) Y644HSXT (1) Y81KFT (1) Y81KFTMBH (1) PAT81KFT-18V (1)	W1CVT (2)	W1CVT (2)	U1CRT-1 (2)	Green	11	1-9/16"
YAV1C-TC516-FXB				5/16"	0.75"	1.50"	0.12"	2.60"							

* Use PUADP-1 adapter with U dies in Y46 HYPRESS™

** The 16 MM² and 120 MM² referenced here are for both Class 2 and Class 5 conductor.

*** The MM² conductor sizes listed are the recommendations for Class 5 conductor.

‡ P44RT for use with Y46 HYPRESS™ only, PUADP-1 adapter not required

▲ See tooling section of this catalog for complete tool and die listings. Use ONLY color-coded die recommendations for -FX connectors. For nest/indentor system contact factory

♦ For applications greater than 2000 Volts consult cable manufacturer for voltage stress relief instructions

Note: All dimensions shown are for reference only.

Blue highlighted items are industry standard and most frequently ordered.

ONE HOLE HYLUG™ FLEX CONDUCTOR LONG BARREL BELLED END (Continued)

UL Listed 90° C,
600 Volts to 35kV ♦

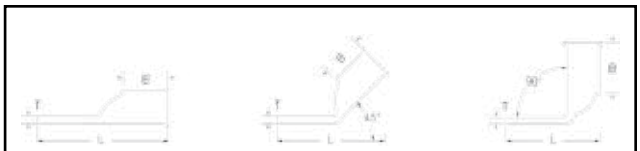

45° and 90° angles are available.
Please contact Customer Service to order:
1-800-346-4175

Catalog Number	Fig #	Conductor AWG	Conductor *** MM²	Stud Hole Size	Tongue Width	Figure Dimensions (B)	Figure Dimensions (T)	Figure Dimensions (L)	▲ Installation Tooling: Dieless (# of crimps)	Mechanical: MD6, OUR840, MD7-34R	Hydraulic: BCT500HS, Y500CTHS	Hydraulic: Y35, Y39 Y750, Y46* PAT750	Color Code	Die Index	Wire Strip Length
YAV25-TC10-FXB	1	275/24 1/0 Weld 1/0 AWG	50	#8 - #10	0.83"	1.50"	0.12"	2.45"	MY29-11 (2) Y644HSXT (1) Y81KFT (2) Y81KFTMBH (2) PAT81KFT-18V (2)	W25VT (4)	W25VT (4)	U25RT (2)	Pink	12	1-9/16"
YAV25-TC516-FXB				5/16"	0.83"	1.50"	0.12"	2.64"							
YAV25-TC38-FXB				3/8"	0.83"	1.50"	0.12"	2.77"							
YAV25-TC12-FXB				1/2"	0.83"	1.50"	0.12"	3.20"							
YAV26-TC38-FXB	1	352/24 2/0 Weld 2/0 AWG	70	3/8"	0.93"	1.63"	0.13"	2.95"		W26VT (4)	W26VT (4)	U26RT (2)	Black	13	1-13/16"
YAV26-TC12-FXB	1			1/2"	0.93"	1.63"	0.13"	3.39"							
YAV27-TC12-FXB	1	3/0 AWG 450/24 3/0 Weld	95	1/2"	1.04"	1.64"	0.14"	3.44"		W27VT (4)	W27VT (4)	U27RT (2)	Orange	14	1-13/16"
YAV28-TC38-FXB	1	4/0 AWG	4/0 Str. (550/24)	—	1.14"	1.77"	0.14"	3.19"		W28VT (4)	W28VT (4)	U28RT (2)	Purple	15	1-7/8"
YAV28-TC12-FXB				—	1.14"	1.77"	0.14"	3.63"							
YA30-TC12-FXB	1	Class G 259 str. Class H 427 str. 250 Flex	—	1/2"	1.20"	2.16"	0.16"	4.04"	Y644HSXT (1) Y81KFT (2) Y81KFTMBH (2) PAT81KFT-18V (2)	W29VT (4)	W29VT (4)	U29RT (2)	Yellow	16	2-1/4"
YA31-TC12-FXB	1	637/24 Class I,K,M	150	1/2"	1.29"	2.18"	0.18"	4.09"		W30VT (4)	W30VT (4)	U30RT (4)	White	17	2-1/4"
YA32-TC12-FXB	1	313.1 kcmil	185	1/2"	1.40"	2.32"	0.19"	4.28"		W31VT (4)	W31VT (4)	U31RT (4)	Red	18	2-1/4"
YA34-TC12-FXB	1	373.7 kcmil 925/24	240	1/2"	1.55"	2.48"	0.23"	4.54"		W32VT (4)	W32VT (4)	U32RT (4)	Blue	19	2-9/16"
YA36-TC12-FXB	1	444.4 kcmil 1100/24	—	1/2"	1.73"	2.95"	0.26"	5.09"		—	—	U34RT (4)	Brown	20	3-1/16"
YA36-TC58-FXB				5/8"	1.73"	2.95"	0.26"	5.15"							
YA38-TC12-FXB	1	550 kcmil 1325/24	300	1/2"	1.07″	3.08″	0.27″	5.07″		—	—	U38RT (4)	Pink	L99	3-3/16"
YA38-TC58-FXB	1	535.3 kcmil 1325/24	300	5/8"	1.84"	3.08"	0.27"	5.32"		—	—	U38XRT (4)	Pink	L99	3-3/16"
YA40-TC58-FXB	1	646 kcmil 1600/24	400	5/8"	1.98"	3.24"	0.30"	5.53"	Y644HSXT (1) Y81KFT (3) Y81KFTMBH (3) PAT81KFT-18V (3)	—	—	U39RT (4)	Black	24	3-5/16"
YA44-TC58-FXB	1	777.7 kcmil 1925/24	500	5/8"	2.18"	3.33"	0.32"	5.71"		—	—	U44XRT (4)	Yellow	L115	3-7/16"
YA46-TC58-FXB	1	1111 kcmil	—	5/8"	2.69"	3.58"	0.39"	6.19"	—	—	—	**P45RT (4)	Yellow	29	3-11/16"

* Use PUADP-1 adapter with U dies in Y46 HYPRESS™
** The 16 MM² and 120 MM² referenced here are for both Class 2 and Class 5 conductor
*** The MM² conductor sizes listed are the recommendations for Class 5 conductor

‡ P44RT for use with Y46 HYPRESS™ only. PUADP-1 adapter not required.
▲ See tooling section of this catalog for complete tool and die listings. Use ONLY color-coded die recommendations for -FX connectors. For nest/indentor system contact factory.

♦ For applications greater than 2000 Volts consult cable manufacturer for voltage stress relief instructions
Note: All dimensions shown are for reference only.

Blue highlighted items are industry standard and most frequently ordered.

TWO HOLE HYLUG™ FLEX CONDUCTOR STANDARD BARREL

TYPES YA-L-2TC, YA-L-2TC-FX, YAV-L-2TC-FX

COPPER COMPRESSION TERMINAL

UL Listed 90° C,
600 Volts to 35kV ♦

45° and 90° angles are available.
Please contact Customer Service to order:
1-800-346-4175

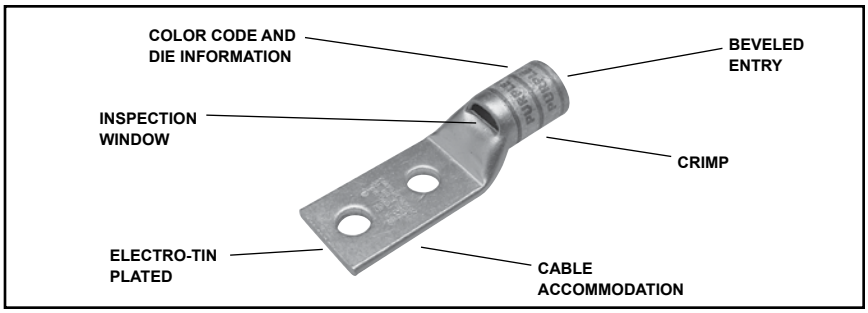

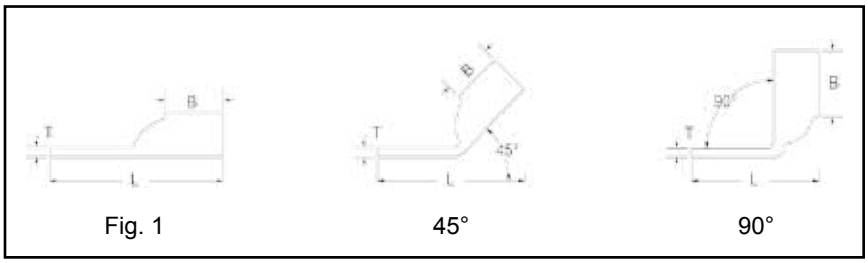

Catalog Number	Fig. #	Conductor AWG	Conductor *** MM²	Stud Hole Size	Stud Hole Spacing	Tongue Width	Figure Dimensions (B)	Figure Dimensions (T)	Figure Dimensions (L)	▲ Installation Tooling: Dieless (# of Crimps)	▲ Installation Tooling: Mechanical MD6, OUR840, MD7-34R	▲ Installation Tooling: Hydraulic BCT500HS, Y500CTHS	▲ Installation Tooling: Hydraulic Y35, Y39 Y750, Y46* PAT750	Color Code	Die Index	Wire Strip Length
YA8C-L2TC10	1	#8 Weld #8 AWG 37/24 #8 Sol #6 Sol	10	#10	5/8"	0.41"	0.44"	0.08"	1.83"	MRC840 (1) MY29-3 (1) MY29-11 (1) Y8MRB-1 (1) Y1MRTC (1) Y81KFT (1) Y81KFTMBH (1) PAT81KFT-18V (1)	W8CVT (1) W8CRT (1) X8CRT (1)	W8CVT (1) W8CRT (1) X8CRT (1)	U8CRT (1)	Red	49	7/16"
YA8C-L2TC14				1/4"	5/8"	0.44"	0.44"	0.08"	1.95"							
YA8C-L2TC14E2				1/4"	3/4"	0.44"	0.44"	0.08"	2.08"							
YA8C-L2TC14E1				1/4"	1"	0.44"	0.44"	0.08"	2.33"							
YA8C-L2TC38				3/8"	1"	0.58"	0.44"	0.06"	2.52"							
YAV6C-L2TC10E9-FX	1	61/24 #6 Weld #6 AWG	16	#10	1/2"	0.48"	0.50"	0.08"	1.81"	MRC840 (1) MY29-11 (1) Y1MRTC (1) Y81KFT (1) Y81KFTMBH (1) PAT81KFT-18V (1) Y644HSXT (1)	W5CVT (1) W5CRT (1) X5CRT (1)	W5CVT (1) W5CRT (1) X5CRT (1)	U5CRT (1)	Blue	7	1/2"
YAV6C-L2TC10-FX				#10	5/8"	0.45"	0.50"	0.08"	1.94"							
YAV6C-L2TC10E4-FX				#10	11/16"	0.45"	0.50"	0.08"	2.00"							
YAV6C-L2TC10E2-FX				#10	3/4"	0.48"	0.50"	0.08"	2.06"							
YAV6C-L2TC14-FX				1/4"	5/8"	0.48"	0.50"	0.08"	2.06"							
YAV6C-L2TC14E2-FX				1/4"	3/4"	0.48"	0.50"	0.08"	2.16"							
YAV6C-L2TC14E1-FX				1/4"	1"	0.48"	0.50"	0.08"	2.44"							
YAV6C-L2TC516-FX				5/16"	1"	0.52"	0.50"	0.07"	2.50"							
YAV6C-L2TC38-FX				3/8"	1"	0.58"	0.50"	0.06"	2.62"							
YAV6C-L2NTC-FX				1/2"	1-3/4"	0.83"	0.50"	0.12"	3.81"							
YAV4C-L2TC14-FX	1	91/24 105/24 #4 Weld #4 AWG	—	1/4"	5/8"	0.55"	0.50"	0.09"	2.08"	MY29-11 (1) Y1MRTC (1) Y81KFT (1) Y81KFTMBH (1) PAT81KFT-18V (1) Y644HSXT (1)	W4CVT (1) W4CRT (1) X4CRT (1)	W4CVT (1) W4CRT (1) X4CRT (1)	U4CRT (1)	Gray	8	1/2"
YAV4C-L2TC14E2-FX				1/4"	3/4"	0.55"	0.50"	0.09"	2.20"							
YAV4C-L2TC14E1-FX				1/4"	1"	0.55"	0.50"	0.09"	2.45"							
YAV4C-L2TC516-FX				5/16"	1"	0.55"	0.50"	0.09"	2.52"							
YAV4C-L2TC38-FX				3/8"	1"	0.58"	0.50"	0.08"	2.68"							
YAV4C-L2NTC-FX				1/2"	1-3/4"	0.83"	0.50"	0.12"	3.87"							
YAV2C-L2TC14-FX	1	125/24 150/24 #2 Weld #2 AWG	35	1/4"	5/8"	0.68"	0.63"	0.10"	2.26"	MY29-11 (1) Y1MRTC (2) Y81KFT (1) Y81KFTMBH (1) PAT81KFT-18V (1) Y644HSXT (1)	W2CVT (1) W2CRT (1) X2CRT (1)	W2CVT (1) W2CRT (1) X2CRT (1)	U2CRT (1)	Brown	10	11/16"
YAV2C-L2TC14E2-FX				1/4"	3/4"	0.68"	0.63"	0.10"	2.38"							
YAV2C-L2TC14E1-FX				1/4"	1"	0.68"	0.63"	0.10"	2.63"							
YAV2C-L2TC516-FX				5/16"	1"	0.68"	0.63"	0.10"	2.71"							
YAV2C-L2TC38-FX				3/8"	1"	0.68"	0.63"	0.10"	2.82"							
YAV2C-L2NTC-FX				1/2"	1-3/4"	0.83"	0.63"	0.08"	4.07"							

* Use PUADP-1 adaptor with U dies in Y46 HYPRESS™
** The MM² conductor size referenced here is for both Class 2 and Class 5 conductor
*** The MM² conductor sizes listed are the recommendations for Class 5 conductor

▲ See tooling section of this catalog for complete tool and die listings. Use ONLY color-coded die recommendations for -FX connectors. For nest/indentor system contact factory

♦ For applications greater than 2000 Volts consult cable manufacturer for voltage stress relief instructions

Note: All dimensions shown are for reference only.

Blue highlighted items are industry standard and most frequently ordered.

TWO HOLE HYLUG™ FLEX CONDUCTOR STANDARD BARREL (Continued)

UL Listed 90° C,
600 Volts to 35kV ♦

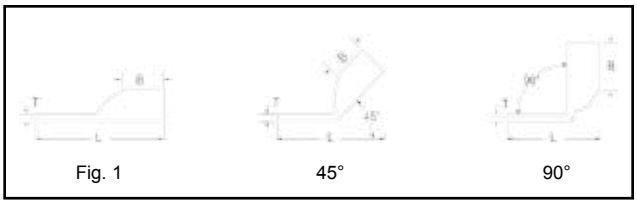

45° and 90° angles are available.
Please contact Customer Service to order:
1-800-346-4175

Catalog Number	Fig. #	Conductor AWG	Conductor *** MM²	Stud Hole Size	Stud Hole Spacing	Tongue Width	Figure Dimensions (B)	Figure Dimensions (T)	Figure Dimensions (L)	▲ Installation Tooling: Dieless (# of Crimps)	Mechanical: MD6, OUR840, MD7-34R	Hydraulic: BCT500HS, Y500CTHS	Hydraulic: Y35, Y39 Y750, Y46* PAT750	Color Code	Die Index	Wire Strip Length
YAV1C-L2TC14-FX	1	175/24 225/24 #1 Weld #1 AWG	—	1/4"	5/8"	0.75"	0.62"	0.12"	2.28"	MY29-11 (1) Y644HSXT (1) Y81KFT (1) Y81KFTMBH (1) PAT81KFT-18V (1)	W1CVT (1) W1CRT-1 (1) X1CRT-1 (1)	W1CVT (1) W1CRT-1 (1) X1CRT-1 (1)	U1CRT-1 (1)	Green	11	11/16"
YAV1C-L2TC14E2-FX				1/4"	3/4"	0.75"	0.62"	0.12"	2.41"							
YAV1C-L2TC14E1-FX				1/4"	1"	0.75"	0.62"	0.12"	2.65"							
YAV1C-L2TC516-FX				5/16"	1"	0.75"	0.62"	0.12"	2.72"							
YAV1C-L2TC38-FX				3/8"	1"	0.75"	0.62"	0.12"	2.85"							
YAV1C-L2NTC-FX				1/2"	1-3/4"	0.83"	0.62"	0.11"	4.04"							
YAV25-L2TC14-FX	1	275/24 1/0 Weld 1/0 AWG	50	1/4"	5/8"	0.83"	0.69"	0.12"	2.39"		W25VT (2) W25RT (2) X25RT (2)	W25VT (2) W25RT (2) X25RT (2)	U25RT (1)	Pink	12	11/16"
YAV25-L2TC14E2-FX				1/4"	3/4"	0.83"	0.69"	0.12"	2.51"							
YAV25-L2TC516E2-FX				5/16"	3/4"	0.83"	0.69"	0.12"	2.57"							
YAV25-L2TC516-FX				5/16"	1"	0.83"	0.69"	0.12"	2.82"							
YAV25-L2TC38-FX				3/8"	1"	0.83"	0.69"	0.12"	2.95"							
YAV25-L2TC12E1-FX				1/2"	1"	0.83"	0.69"	0.12"	3.20"							
YAV25-L2NTC-FX				1/2"	1-3/4"	0.83"	0.69"	0.12"	4.14"							
YAV26-L2TC14-FX	1	325/24 2/0 Weld 2/0 AWG	70 class 5 95 class 2	1/4"	5/8"	0.93"	0.81"	0.13"	2.56"		W26VT (2) W26RT (2) X26RT (2)	W26VT (2) W26RT (2) X26RT (2)	U26RT (1)	Black	13	13/16"
YAV26-L2TC14E2-FX				1/4"	3/4"	0.93"	0.81"	0.13"	2.68"							
YAV26-L2TC516-FX				5/16"	1"	0.93"	0.81"	0.13"	2.99"							
YAV26-L2TC38-FX				3/8"	1"	0.93"	0.81"	0.13"	3.12"							
YAV26-L2TC38E10-FX				3/8"	1-1/4"	2.08"	0.81"	0.13"	3.37"							
YAV26-L2TC12E1-FX				1/2"	1"	0.93"	0.81"	0.13"	3.37"							
YAV26-L2NTC-FX				1/2"	1-3/4"	0.93"	0.81"	0.13"	4.31"							
YAV27-L2TC14-FX	1	450/24 3/0 Weld 3/0 AWG	95	1/4"	5/8"	1.03"	1.00"	0.14"	2.79"		W27VT (2) W27RT (2) X27RT (3)	W27VT (2) W27RT (2) X27RT (3)	U27RT (1)	Orange	14	1"
YAV27-L2TC38-FX				3/8"	1"	1.03"	1.00"	0.14"	3.35"							
YAV27-L2NTC-FX				1/2"	1-3/4"	1.03"	1.00"	0.14"	4.54"							
YAV28-L2TC14E2-FX	1	550/24 4/0 Weld 4/0 AWG	120	1/4"	3/4"	1.14"	1.03"	0.15"	2.99"		W28VT (2) W28RT (2) X28RT (3)	W28VT (2) W28RT (2) X28RT (3)	U28RT (1)	Purple	15	1-1/16"
YAV28-L2TC14-FX				1/4"	5/8"	1.14"	1.03"	0.15"	2.86"							
YAV28-L2TC516-FX				5/16"	1"	1.14"	1.03"	0.15"	3.30"							
YAV28-L2TC38-FX				3/8"	1"	1.14"	1.03"	0.15"	3.43"							
YAV28-L2TC12E1-FX				1/2"	1"	1.14"	1.03"	0.15"	3.68"							
YAV28-L2TC12-FX				1/2"	1-1/4"	1.14"	1.03"	0.15"	3.93"							
YAV28-L2NTC-FX				1/2"	1-3/4"	1.14"	1.03"	0.15"	4.62"							
YAV29-L2TC14-FX	1	550/24 4/0 Weld 4/0 AWG	—	1/4"	5/8"	1.18"	1.03"	0.16"	2.87"	Y644HSXT (1) Y81KFT (1) Y81KFTMBH (1) PAT81KFT-18V (1)	W29VT (2) X29RT (4)	W29VT (2) W29RT (2) X29RT (4)	U29RT (1)	Yellow	16	1-1/16"
YAV29-L2TC14E2-FX				1/4"	3/4"	1.18"	1.03"	0.16"	2.99"							
YAV29-L2TC516-FX				5/16"	1"	1.18"	1.03"	0.16"	3.31"							
YAV29-L2TC38-FX				3/8"	1"	1.18"	1.03"	0.16"	3.43"							
YAV29-L2TC12E1-FX	1	550/24 4/0 Weld	—	1/2"	1"	1.18"	1.03"	0.16"	3.68"							
YAV29-L2TC12-FX				1/2"	1-1/4"	1.18"	1.03"	0.16"	3.93"							
YAV29-L2NTC-FX				1/2"	1-3/4"	1.18"	1.03"	0.16"	4.62"							

* Use PUADP-1 adaptor with U dies in Y46 HYPRESS™
** The MM² conductor size referenced here is for both Class 2 and Class 5 conductor
*** The MM² conductor sizes listed are the recommendations for Class 5 conductor

▲ See tooling section of this catalog for complete tool and die listings. Use ONLY color-coded die recommendations for -FX connectors. For nest/indentor system contact factory

♦ For applications greater than 2000 Volts consult cable manufacturer for voltage stress relief instructions

Note: All dimensions shown are for reference only.

Blue highlighted items are industry standard and most frequently ordered.

TWO HOLE HYLUG™ FLEX CONDUCTOR STANDARD BARREL (Continued)

UL Listed 90° C,
600 Volts to 35kV ♦

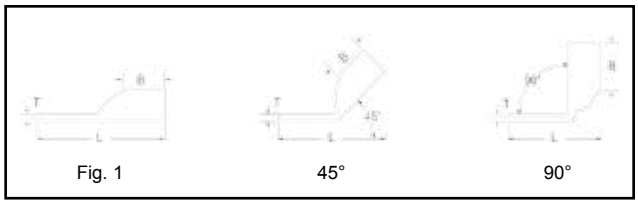

45° and 90° angles are available.
Please contact Customer Service to order:
1-800-346-4175

Catalog Number	Fig. #	Conductor AWG	Conductor *** MM²	Stud Hole Size	Stud Hole Spacing	Tongue Width	Figure Dimensions (B)	Figure Dimensions (T)	Figure Dimensions (L)	▲ Installation Tooling: Dieless (# of Crimps)	▲ Installation Tooling: Mechanical MD6, OUR840, MD7-34R	▲ Installation Tooling: Hydraulic BCT500HS, Y500CTHS	▲ Installation Tooling: Hydraulic Y35, Y39 Y750, Y46* PAT750	Color Code	Die Index	Wire Strip Length
YA30-L2TC516-FX	1	250 Flex CLASS G 259 Str. CLASS H 427 Str.	—	5/16"	1"	1.69"	1.03"	0.16"	3.32"	Y644HSXT (1) Y81KFT (1) Y81KFTMBH (1) PAT81KFT-18V (1)	W29VT (2) X29RT (4)	W29VT (2) W29RT (2) X29RT (4)	U29RT (1)	Yellow	16	1-1/16"
YA30-L2TC38-FX				3/8"	1"	1.20"	1.03"	0.16"	3.45"							
YA30-L2NTC-FX				1/2"	1-3/4"	1.20"	1.03"	0.16"	4.63"							
YA31-L2TC38-FX	1	250 Flex 637/24 CLASS I,K,M	150	3/8"	1"	1.29"	1.06"	0.18"	3.51"		W30VT (2)	W30VT (2) W30RT (2)	U30RT (2)	White	17 or 298	1-1/8"
YA31-L2TC12-FX				1/2"	1-1/4"	1.29"	1.06"	0.18"	4.01"							
YA31-L2NTC-FX				1/2"	1-3/4"	1.29"	1.06"	0.18"	4.70"							
YA32-L2TC38-FX	1	775/24 313.1 kcmil	185	3/8"	1"	1.40"	1.19"	0.19"	3.69"		W31VT (2)	W31VT (2) W31RT (2)	U31RT (2)	Red	18 or 324	1-1/4"
YA32-L2NTC-FX				1/2"	1-3/4"	1.40"	1.19"	0.19"	4.88"							
YA34-L2TC516-FX	1	373.7 kcmil 925/24 (350 kcmil Nom.)	240	5/16"	1"	1.55"	1.27"	0.23"	3.75"		W32VT (2)	W32VT (2) W32RT (2)	U32RT (2)	Blue	19 or 470	1-5/16"
YA34-L2TC38-FX				3/8"	1"	1.55"	1.27"	0.23"	3.88"							
YA34-L2NTC38-FX				3/8"	1-3/4"	1.55"	1.27"	0.23"	4.63"							
YA34-L2TC12-FX				1/2"	1-1/4"	1.55"	1.27"	0.23"	4.38"							
YA34-L2NTC-FX				1/2"	1-3/4"	1.55"	1.27"	0.23"	5.06"							
YA36-L2TC38-FX	1	1100/24 444.4 kcmil	—	3/8"	1"	1.74"	1.38"	0.27"	4.24"		—	—	U34RT (2)	Brown	20 or 299	1-7/16"
YA36-L2NTC-FX				1/2"	1-3/4"	1.74"	1.38"	0.27"	5.24"							
YA38-L2TC516-FX	1	535.3 kcmil 1325/24 (500 kcmil nom.)	300	5/16"	1"	1.84"	1.45"	0.27"	4.04"		—	—	U38XRT (2)	Pink	L99	1-7/16"
YA38-L2TC38-FX				3/8"	1"	1.84"	1.45"	0.27"	4.35"							
YA38-L2TC12-FX				1/2"	1-1/4"	1.84"	1.45"	0.27"	4.67"							
YA38-L2NTC-FX				1/2"	1-3/4"	1.84"	1.45"	0.27"	5.35"							
YA39-L2TC38E10-FX	1	600 kcmil 1472/24	—	3/8"	1-1/4"	2.26"	1.42"	0.27"	4.61"	Y644HSXT (1) Y81KFT (2) Y81KFTMBH (2) PAT81KFT-18V (2)	—	—	U38RT (2)	Purple	400	1-1/2"
YA39-L2NTC-FX				1/2"	1-3/4"	1.91"	1.42"	0.27"	5.36"							1-3/8"
YA40-L2TC38-FX	1	646 kcmil 1600/24	400	3/8"	1"	1.98"	1.42"	0.30"	4.38"		—	—	U39RT (2)	Black	24	1-5/16"
YA40-L2NTC-FX				1/2"	1-3/4"	1.98"	1.42"	0.30"	5.38"							
YA44-L2TC38-FX	1	777.7 kcmil 1925/24 750 kcmil nom.)	500	3/8"	1"	2.19"	1.65"	0.33"	4.74"		—	—	U44XRT (2)	Yellow	L115	1-5/8"
YA44-L2TC12-FX				1/2"	1-1/4"	2.19"	1.65"	0.33"	5.05"							
YA44-L2TC12E3-FX				1/2"	1-1/2"	2.19"	1.65"	0.33"	5.30"							
YA44-L2NTC-FX				1/2"	1-3/4"	2.19"	1.65"	0.33"	5.74"							
YA44-L2TC58-FX				5/8"	1-1/2"	2.19"	1.65"	0.33"	5.55"							

* Use PUADP-1 adaptor with U dies in Y46 HYPRESS™

** The MM² conductor size referenced here is for both Class 2 and Class 5 conductor

*** The MM² conductor sizes listed are the recommendations for Class 5 conductor

▲ See tooling section of this catalog for complete tool and die listings. Use ONLY color-coded die recommendations for -FX connectors. For nest/indentor system contact factory

♦ For applications greater than 2000 Volts consult cable manufacturer for voltage stress relief instructions

Note: All dimensions shown are for reference only.

Blue highlighted items are industry standard and most frequently ordered.

TWO HOLE HYLUG™ FLEX CONDUCTOR STANDARD BARREL NARROW TONGUE

TYPE YAV-L-2NTFX

COPPER COMPRESSION NARROW TONGUE TERMINAL

UL Listed 90º C
600 Volts to 35 kV ♦

45° and 90° angles are available.
Please contact Customer Service to order:
1-800-346-4175

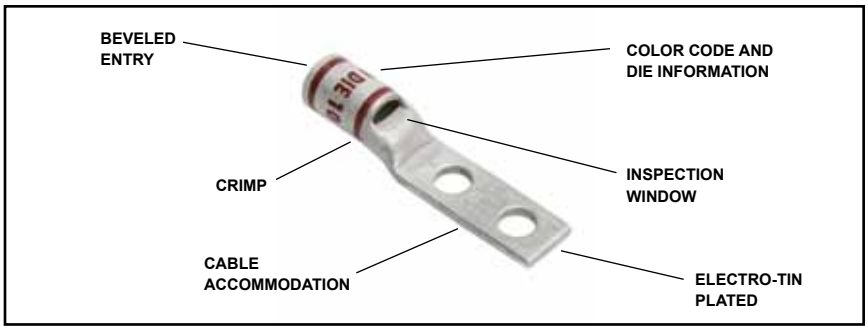

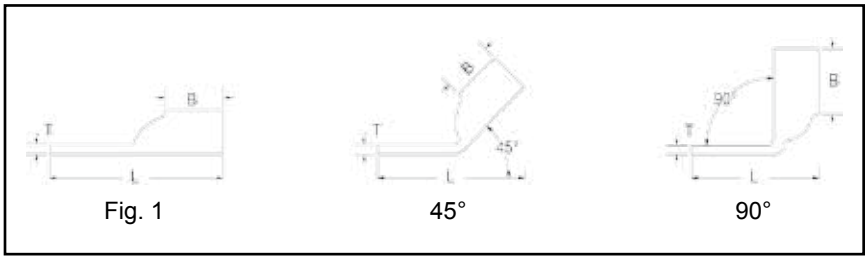

Fig. 1 45° 90°

Catalog Number	Fig #	Conductor AWG	Conductor *** MM²	Stud Hole Size	Stud Hole Spacing	Tongue Width	Figure Dimensions (B)	Figure Dimensions (T)	Figure Dimensions (L)	▲ Installation Tooling: Dieless (# of crimps)	▲ Installation Tooling: Mechanical MD6, OUR840, MD7-34R	▲ Installation Tooling: Hydraulic BCT500HS, Y500CTHS	▲ Installation Tooling: Hydraulic Y35, Y39 Y750, Y46* PAT750	Color Code	Die Index	Wire Strip Length
YAV4CL2NT10FX	1	#4 AWG #4 Weld 91/24 105/24	—	#10	5/8"	0.41"	0.50"	0.09"	1.95"	MY29-11 (1) Y1MRTC (2) Y81KFT (1) Y81KFTMBH (1) PAT81KFT-18V (1) Y644HSXT (1)	W4CVT (1) W4CRT (1) X4CRT (1)	W4CVT (1) W4CRT (1) X4CRT (1)	U4CRT (1)	Gray	8	9/16"
YAV4CL2NT10E1FX				#10	1"	0.41"	0.50"	0.09"	2.33"							
YAV4CL2NT14FX				1/4"	5/8"	0.45"	0.50"	0.09"	2.08"							
YAV2CL2NT10FX	1	#2 AWG #2 Weld 1 25/24 150/24	35	#10	5/8"	0.48"	0.63"	0.10"	2.14"		W2CVT (1) W2CRT (1) X2CRT (1)	W2CVT (1) W2CRT (1) X2CRT (1)	U2CRT (1)	Brown	10	11/16"
YAV2CL2NT14FX				1/4"	5/8"	0.48"	0.63"	0.10"	2.26"							
YAV2CL2NT14E1FX				1/4"	1"	0.48"	0.63"	0.10"	2.63"							
YAV1CL2NT14FX	1	#1 AWG #1 Weld 175/24 225/24	—	1/4"	5/8"	0.50"	0.62"	0.12"	2.28"	MY29-11 (1) Y644HSXT (1) Y81KFT (1) Y81KFTMBH (1) PAT81KFT-18V (1)	W1CVT (1) W1CRT-1 (1) X1CRT-1 (1)	W1CVT (1) W1CRT-1 (1) X1CRT-1 (1)	U1CRT-1 (1)	Green	11	11/16"
YAV1CL2NT516FX				5/16"	1"	0.58"	0.62"	0.12"	2.72"							
YAV25L2NT14FX	1	1/0 AWG 1/0 Weld 275/24	50	1/4"	5/8"	0.64"	0.69"	0.12"	2.39"		W25VT (2) W25RT (2) X25RT (2)	W25VT (2) W25RT (2) X25RT (2)	U25RT (1)	Pink	12	11/16"
YAV25L2NT14E1FX				1/4"	1"	0.64"	0.69"	0.12"	2.76"							
YAV25L2NT516FX				5/16"	1"	0.58"	0.69"	0.12"	2.82"							
YAV26L2NT14FX	1	2/0 AWG 2/0 Weld 325/24	70	1/4"	5/8"	0.64"	0.81"	0.13"	2.56"		W26VT (2) W26RT (2) X26RT (2)	W26VT (2) W26RT (2) X26RT (2)	U26RT (1)	Black	13	13/16"
YAV26L2NT516FX				5/16"	1"	0.58"	0.81"	0.13"	2.99"							
YAV26L2NT38FX				3/8"	1"	0.63"	0.81"	0.13"	3.23"							
YAV28L2ENT14FX	1	4/0 AWG 4/0 Weld 550/24	—	1/4"	5/8"	0.76"	1.03"	0.15"	2.86"		W28VT (2) W28RT (2) X28RT (3)	W28VT (2) W28RT (2) X28RT (3)	U28RT (1)	Purple	15	1-1/16"
YAV28L2NT38FX				3/8"	1"	0.94"	1.03"	0.15"	3.43"							

Consult cable manufacturers for stress relief instructions
♦ For applications greater than 2000 Volts consult cable manufacturer for voltage stress relief instructions
* Use PUADP-1 adaptor with U dies in Y46 HYPRESS™

*** The MM² conductor sizes Listed are the recommendations for CLASS 5 conductor
▲ See tooling section of this catalog for complete tool and die listings. Use ONLY color-coded die recommendations for -FX connectors

Note: All dimensions shown are for reference only

Blue highlighted items are industry standard and most frequently ordered.

TWO HOLE HYLUG™ FLEX CONDUCTOR STANDARD BARREL NARROW TONGUE (Continued)

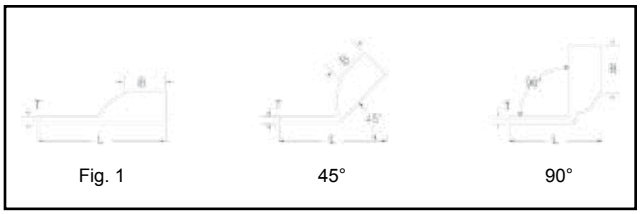

UL Listed 90° C
600 Volts to 35 kV ♦

45° and 90° angles are available.
Please contact Customer Service to order :
1-800-346-4175

Catalog Number	Fig #	Conductor AWG	Conductor *** MM²	Stud Hole Size	Stud Hole Spacing	Tongue Width	Figure Dimensions (B)	Figure Dimensions (T)	Figure Dimensions (L)	▲ Installation Tooling: Dieless (# of crimps)	Mechanical: MD6, OUR840, MD7-34R	Hydraulic: BCT500HS, Y500CTHS	Hydraulic: Y35, Y39 Y750, Y46* PAT750	Color Code	Die In-dex	Wire Strip Length
YAV29L2NT38FX	1	4/0 AWG 4/0 Weld 550/24	—	3/8"	1"	0.94"	1.03"	0.16"	3.43"	Y644HSXT (1) Y81KFT (1) Y81KFTMBH (1) PAT81KFT-18V (1)	W29VT (2) X29RT (4)	W29VT (2) W29RT (2) X29RT (4)	U29RT (1)	Yellow	16	1-1/16"
YA31L2NT38FX	1	250 Flex 637/24 Class I,K,M	150	3/8"	1"	0.96"	1.06"	0.18"	3.51"		W30VT (2)	W30VT (2) W30RT (2)	U30RT (2)	White	17 or 298	1-1/8"
YA32L2NT38FX	1	313.1 kcmil 775/24 300 Flex	185	3/8"	1"	0.96"	1.19"	0.20"	3.69"		W31VT (2)	W31VT (2) W31RT (2)	U31RT (2)	Red	18	1-1/4"
YA34L2NT38FX	1	373.7 kcmil 925/24 (350 kcmil Nom.)	240	3/8"	1"	0.96"	1.27"	0.23"	3.88"		W32VT (2)	W32VT (2) W32RT (2)	U32RT (2)	Blue	19 or 470	1-5/16"
YA36L2NT38FX	1	444.4 kcmil 1100/24 450 Flex	—	3/8"	1"	1.63"	1.38"	0.27"	4.24"		—	—	U34RT (2)	Brown	20	1-7/16"
YA36L2ENT38E10FX	1			3/8"	1-1/4"	2.30"	1.38"	0.27"	4.49"							
YA38L2ENT38FX	1	535.3 kcmil 1325/24 500 Flex	300	3/8"	1"	1.50"	1.45"	0.27"	4.35"		—	—	U38XRT (2)	Pink	L99	1-7/16"
YA38L2NT38FX				3/8"	1"	1.63"	1.45"	0.27"	4.35"							
YA38L2NNTFX				1/2"	1-3/4"	1.63"	1.45"	0.27"	5.35"							
YA40L2NNTFX	1	646 kcmil 1600/24 650 Flex	400	1/2"	1-3/4"	1.63"	1.42"	0.30"	5.38"	Y644HSXT (1) Y81KFT (2) Y81KFTMBH (2) PAT81KFT-18V (2)	—	—	U39RT (2)	Black	24	1-5/16"
YA44L2NT38FX	1	777.7 kcmil 1925/24 (750 kcmil nom.)	500	3/8"	1"	1.63"	1.65"	0.33"	4.74"		—	—	U44XRT (2)	Yellow	L115	1-5/8"
YA44L2NNTFX				1/2"	1-3/4"	1.63"	1.65"	0.33"	5.74"							
YA45L2NT38FX	1	929 kcmil 2300/24	—	3/8"	1"	1.70"	2.00"	0.38"	5.18"	—	—	—	P44RT (2)	White	27	2-1/16"

Consult cable manufacturers for stress relief instructions
♦ For applications greater than 2000 Volts consult cable manufacturer for voltage stress relief instructions
* Use PUADP-1 adaptor with U dies in Y46 HYPRESS™

*** The MM² conductor sizes Listed are the recommendations for CLASS 5 conductor
▲ See tooling section of this catalog for complete tool and die listings. Use ONLY color-coded die recommendations for -FX connectors

Note: All dimensions shown are for reference only.

Blue highlighted items are industry standard and most frequently ordered.

TWO HOLE HYLUG™ FLEX CONDUCTOR LONG BARREL WITH INSPECTION WINDOW

TYPE YAZ-FX

COPPER COMPRESSION TERMINAL

UL Listed 90° C,
600 Volts to 35kV ♦

45° and 90° angles are available.
Please contact Customer Service to order :
1-800-346-4175

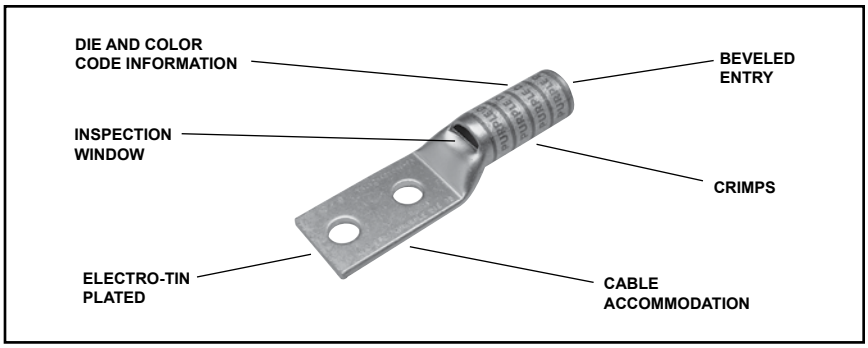

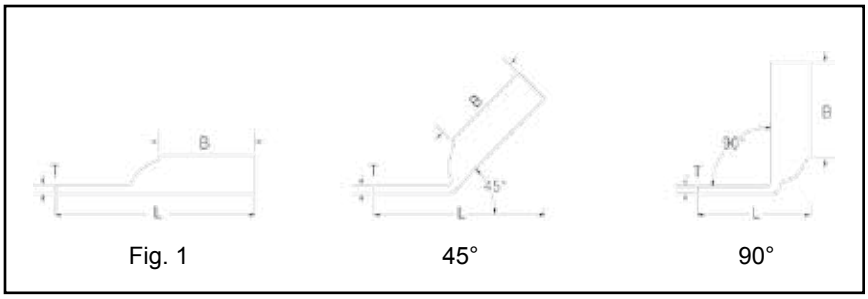

Fig. 1 45° 90°

Catalog Number	Fig. #	Conductor AWG	Conductor *** MM²	Stud Hole Size	Stud Hole Spacing	Tongue Width	Figure Dimensions (B)	Figure Dimensions (T)	Figure Dimensions (L)	▲ Installation Tooling: Dieless (# of Crimps)	▲ Installation Tooling: Mechanical MD6, OUR840, MD7-34R	▲ Installation Tooling: Hydraulic BCT500HS, Y500CTHS	▲ Installation Tooling: Hydraulic Y35, Y39 Y750, Y46* PAT750	▲ Installation Tooling: Color Code	▲ Installation Tooling: Die Index	Wire Strip Length
YAZV102TC14E1	1	14-10 AWG	—	1/4"	1"	1.65"	0.69"	0.05"	2.53"	Y8MRB-1 (2) Y10D (2)	—	—	—	—	—	3/4"
YAZ8C2TC10FX	1	37/24 #8 Weld #8 AWG #8 Sol #6 Sol	** 10	#10	5/8"	0.41"	0.81"	0.08"	2.20"	Y8MRB-1 (2) MY29-11 (2) Y1MRTC (2) Y81KFT (1) Y81KFTMBH (1) PAT81KFT-18V (1)	W8CVT (2) W8CRT (2) X8CRT (2)	W8CVT (2) W8CRT (2) X8CRT (2)	U8CRT (2)	Red	49	1"
YAZ8C2TC10E2FX				#10	3/4"	0.41"	0.75"	0.08"	2.33"							
YAZ8C2TC14FX				1/4"	5/8"	0.44"	0.81"	0.08"	2.32"							
YAZ8C2TC14E2FX				1/4"	3/4"	0.44"	0.81"	0.08"	2.45"							
YAZ8C2TC14E1FX				1/4"	1"	0.44"	0.81"	0.08"	2.70"							
YAZ8C2TC38FX				3/8"	1"	0.58	0.81"	0.06"	2.89"							
YAZV6C2TC10E2FX	1	61/24 #6 Weld #6 AWG	** 16	#10	3/4"	0.48"	0.75"	0.08"	2.22"	MY29-11 (2) Y644HSXT (1) Y1MRTC (2) Y81KFT (1) Y81KFTMBH (1) PAT81KFT-18V (1)	W5CVT (2) W5CRT (2) X5CRT (2)	W5CVT (2) W5CRT (2) X5CRT (2)	U5CRT (2)	Blue	7 or 374	1-3/16"
YAZV6C2TC14FX				1/4"	5/8"	0.48"	0.75"	0.08"	2.22"							
YAZV6C2TC14E2FX				1/4"	3/4"	0.48"	0.75"	0.08"	2.35"							
YAZV6C2TC14E1FX				1/4"	1"	0.48"	0.75"	0.08"	2.60"							
YAZV6C2TC38E2FX				3/8"	3/4"	0.58"	0.75"	0.06"	2.53"							
YAZV6C2TC38E6FX				3/8"	7/8"	0.58"	0.75"	0.06"	2.66"							
YAZV6C2TC38FX				3/8"	1"	0.58"	0.75"	0.06"	2.78"							
YAZV4C2TC14FX	1	91/24-105/24 #4 Weld #4 AWG	—	1/4"	5/8"	0.55"	1.25"	0.09"	2.83"	Y1MRTC (4) MY29-11 (2) Y644HSXT (1) Y81KFT (1) Y81KFTMBH (1) PAT81KFT-18V (1)	W4CVT (2) W4CRT (2) X4CRT (2)	W4CVT (2) W4CRT (2) X4CRT (2)	U4CRT (2)	Gray	8 or 346	1-5/16"
YAZV4C2TC14E2FX				1/4"	3/4"	0.55"	1.25"	0.09"	2.95"							
YAZV4C2TC38E2-FX				3/8"	3/4"	0.58"	1.25"	0.08"	3.14"							
YAZV4C2TC38FX				3/8"	1"	0.58"	1.25"	0.08"	3.39"							
YAZV2C2TC14FX	1	125/24-150/24 #2 Weld #2 AWG	35	1/4"	5/8"	0.68"	1.38"	0.10"	3.01"	Y1MRTC (4) MY29-11 (4) Y644HSXT (1) Y81KFT (1) Y81KFTMBH (1) PAT81KFT-18V (1)	W2CVT (2) W2CRT (2) X2CRT (2)	W2CVT (2) W2CRT (2) X2CRT (2)	U2CRT (2)	Brown	10	1-7/16"
YAZV2C2TC14E2FX				1/4"	3/4"	0.68"	1.38"	0.10"	3.13"							
YAZV2C2TC38FX				3/8"	1"	0.68"	1.38"	0.10"	3.57"							
YAZV2C2NTCFX				1/2"	1-3/4"	0.83"	1.38"	0.10"	4.76"							

* Use PUADP-1 adapter with U dies in Y46 HYPRESS™

** The MM² conductor size referenced here is for both Class 2 and Class 5 conductor

*** The MM² conductor sizes listed are the recommendations for Class 5 conductor

▲ See tooling section of this catalog for complete tool and die listings. Use ONLY color-coded die recommendations for -FX connectors. For nest/indentor system contact factory

♦ For applications greater than 2000 Volts consult cable manufacturer for voltage stress relief instructions

Note: All dimensions shown are for reference only.

Blue highlighted items are industry standard and most frequently ordered.

TWO HOLE HYLUG™ FLEX CONDUCTOR LONG BARREL WITH INSPECTION WINDOW (Continued)

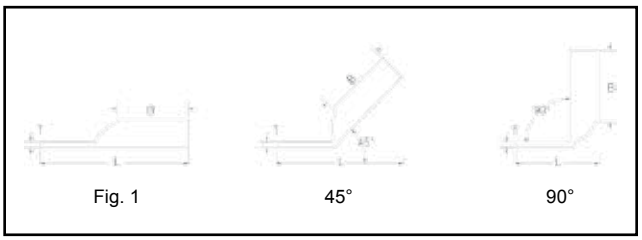

UL Listed 90° C,
600 Volts to 35kV ♦

45° and 90° angles are available.
Please contact Customer Service to order:
1-800-346-4175

Catalog Number	Fig. #	Conductor AWG	Conductor *** MM²	Stud Hole Size	Stud Hole Spacing	Tongue Width	Figure Dimensions (B)	Figure Dimensions (T)	Figure Dimensions (L)	▲ Installation Tooling: Dieless (# of Crimps)	▲ Installation Tooling: Mechanical MD6, OUR840, MD7-34R	▲ Installation Tooling: Hydraulic BCT500HS, Y500CTHS	▲ Installation Tooling: Hydraulic Y35, Y39 Y750, Y46* PAT750	Color Code	Die Index	Wire Strip Length
YAZV1C2TC14FX	1	175/24-225/24 #1 Weld #1 AWG	—	1/4"	5/8"	0.75"	1.38"	0.12"	3.04"	MY29-11 (2) Y644HSXT (1) Y81KFT (2) Y81KFTMBH (2) PAT81KFT-18V (2)	W1CVT (2) W1CRT-1 (2) X1CRT-1 (2)	W1CVT (2) W1CRT-1 (2) X1CRT-1 (2)	U1CRT-1 (2)	Green	11 or 375	1-7/16"
YAZV1C2TC14E2FX				1/4"	3/4"	0.75"	1.38"	0.12"	3.16"							
YAZV1C2TC14E1FX				1/4"	1"	0.75"	1.38"	0.12"	3.41"							
YAZV1C2TC516E6FX				5/16"	7/8"	0.75"	1.38"	0.12"	3.35"							
YAZV1C2TC516FX				5/16"	1"	0.75"	1.38"	0.12"	3.47"							
YAZV1C2TC38FX				3/8"	1"	0.75"	1.38"	0.12"	3.60"							
YAZV252TC14FX	1	275/24 1/0 Weld 1/0 AWG	50	1/4"	5/8"	0.83"	1.50"	0.12"	3.20"		W25VT (4) W25RT (4) X25RT (4)	W25VT (4) W25RT (4) X25RT (4)	U25RT (2)	Pink	12 or 348	1-9/16"
YAZV252TC14E2FX				1/4"	3/4"	0.83"	1.50"	0.12"	3.32"							
YAZV252TC38FX				3/8"	1"	0.83"	1.50"	0.12"	3.76"							
YAZV252NTCFX				1/2"	1-3/4"	0.83"	1.50"	0.12"	4.95"							
YAZV262TC14FX	1	325/24 2/0 Weld 2/0 AWG	70	1/4"	5/8"	0.93"	1.50"	0.13"	3.20"		W26VT (4) W26RT (4) X26RT (4)	W26VT (4) W26RT (4) X26RT (4)	U26RT (2)	Black	13	1-9/16"
YAZV262TC14E2FX				1/4"	3/4"	0.93"	1.50"	0.13"	3.32"							
YAZV262TC38E6FX				3/8"	7/8"	1.71″	1.50"	0.13"	3.68"							
YAZV262TC38FX				3/8"	1"	0.93"	1.50"	0.13"	3.76"							
YAZV262NTCFX				1/2"	1-3/4"	0.93"	1.50"	0.13"	4.95"							
YAZV272TC14E2FX	1	450/24 3/0 Weld 3/0 AWG	95	1/4"	3/4"	1.03"	1.50"	0.14"	3.36"		W27VT (4) W27RT (4) X27RT (6)	W27VT (4) W27RT (4) X27RT (6)	U27RT (2)	Orange	14	1-9/16"
YAZV272TC38FX				3/8"	1"	1.03"	1.50"	0.14"	3.80"							
YAZV282TC14E2FX	1	550/24 4/0 Weld 4/0 AWG	120	1/4"	3/4"	1.14"	1.62"	0.15"	3.52"		W28VT (4) W28RT (4) X28RT (6)	W28VT (4) W28RT (4) X28RT (6)	U28RT (2)	Purple	15	1-11/16"
YAZV282TC38FX				3/8"	1"	1.14"	1.62"	0.15"	3.96"							
YAZV282NTCFX				1/2"	1-3/4"	1.14"	1.62"	0.15"	4.93"							
YAZV292NT516FX	1	4/0 Flex Class I, K, M	—	5/16"	1-3/4"	0.96"	2.00"	0.16"	4.62"	Y644HSXT (1) Y81KFT (2) Y81KFTMBH (2) PAT81KFT-18V (2)	W29VT (4) X29RT (8)	W29RT (4) W29VT (4) X29RT (8)	U29RT (2)	Yellow	16	2-1/16"
YAZ302TC38FX	1	250 Flex CLASS G 259 Str. CLASS H 427 Str.	—	3/8"	1"	1.20"	2.00"	0.16"	4.42"		W29VT (4) X29RT (8)	W29RT (4) W29VT (4) X29RT (8)	U29RT (2)	Yellow	16	2-1/16"

* Use PUADP-1 adapter with U dies in Y46 HYPRESS™

** The MM² conductor size referenced here is for both Class 2 and Class 5 conductor

*** The MM² conductor sizes listed are the recommendations for Class 5 conductor

▲ See tooling section of this catalog for complete tool and die listings. Use ONLY color-coded die recommendations for -FX connectors. For nest/indentor system contact factory

♦ For applications greater than 2000 Volts consult cable manufacturer for voltage stress relief instructions

Note: All dimensions shown are for reference only.

Blue highlighted items are industry standard and most frequently ordered.

TWO HOLE HYLUG™ FLEX CONDUCTOR LONG BARREL WITH INSPECTION WINDOW (Continued)

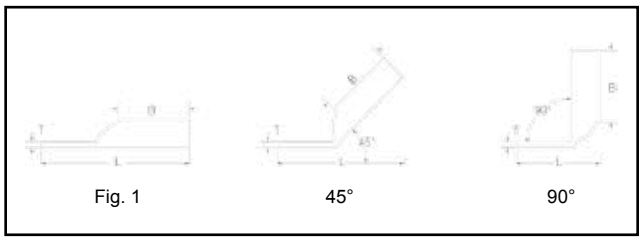

UL Listed 90° C,
600 Volts to 35kV ♦

45° and 90° angles are available.
Please contact Customer Service to order:
1-800-346-4175

Catalog Number	Fig. #	Conductor AWG	Conductor *** MM²	Stud Hole Size	Stud Hole Spacing	Tongue Width	Figure Dimensions (B)	Figure Dimensions (T)	Figure Dimensions (L)	▲ Installation Tooling: Dieless (# of Crimps)	Mechanical: MD6, OUR840, MD7-34R	Hydraulic: BCT500HS, Y500CTHS	Hydraulic: Y35, Y39, Y750, Y46*, PAT750	Color Code	Die Index	Wire Strip Length
YAZ312TC14E2FX	1	250 Flex 637/24 CLASS I, K, M	150	1/4"	3/4"	1.29"	2.00"	0.18"	4.02"	Y644HSXT (1) Y81KFT (2) Y81KFTMBH (2) PAT81KFT-18V (2)	W30VT (4)	W30VT (4) W30RT (4)	U30RT (4)	White	17 or 298	2-1/16"
YAZ312TC38FX				3/8"	1"	1.29"	2.00"	0.18"	4.45"							
YAZ312NTCFX				1/2"	1-3/4"	3.02"	2.00"	0.18"	5.64"							
YAZ322TC38FX	1	775/24 313.1 kcmil	185	3/8"	1"	1.40"	2.12"	0.19"	4.62"		W31VT (4)	W31VT (4) W31RT (4)	U31RT (4)	Red	18 or 324	2-3/16"
YAZ342TC14E2FX	1	373.3 kcmil 925/24 (350 kcmil nom.)	240	1/4"	3/4"	1.55"	2.25"	0.23"	4.42"		W32VT (4)	W32VT (4) W32RT (4)	U32RT (4)	Blue	19 or 470	2-5/16"
YAZ342TC38FX				3/8"	1"	1.55"	2.25"	0.23"	4.85"							
YAZ342NT38FX				3/8"	1"	0.96"	2.25"	0.23"	4.85"							
YAZ342NTCFX				1/2"	1-3/4"	1.55"	2.25"	0.23"	6.04"							
YAZ362TC38FX	1	1100/24 444.4 kcmil	—	3/8"	1"	1.74"	2.69"	0.27"	5.55"		—	—	U34RT (4)	Brown	20 or 299	2-3/4"
YAZ382NT38FX	1	535.3 kcmil 1325/24 500 kcmil Flex	300	3/8"	1"	1.62"	2.81"	0.27"	5.72"		—	—	U38XRT (4)	Pink	L99	2-7/8"
YAZ382TC38FX				3/8"	1"	1.84"	2.81"	0.27"	5.72"							
YAZ382NNTFX				1/2"	1-3/4"	1.62"	2.81"	0.27"	6.72"							
YAZ382NTCFX				1/2"	1-3/4"	1.62"	2.81"	0.27"	6.72"							
YAZ402NTCFX	1	646 kcmil 1600/24 650 kcmil Flex	—	1/2"	1-3/4"	1.98"	2.94"	0.30"	6.89"	Y644HSXT (1) Y644MBH (1)	U39RT (4)	—	U39RT (4)	Black	24	3"
YAZ442NT38FX	1	777.7 kcmil 1925/24 750 Flex	—	3/8"	1"	1.62"	3.00"	0.33"	6.08"		—	—	U44XRT (4)	Yellow	L115	3-1/16"

* Use PUADP-1 adapter with U dies in Y46 HYPRESS™

** The MM² conductor size referenced here is for both Class 2 and Class 5 conductor

*** The MM² conductor sizes listed are the recommendations for Class 5 conductor

▲ See tooling section of this catalog for complete tool and die listings. Use ONLY color-coded die recommendations for -FX connectors. For nest/indentor system contact factory

♦ For applications greater than 2000 Volts consult cable manufacturer for voltage stress relief instructions.

Note: All dimensions shown are for reference only.

Blue highlighted items are industry standard and most frequently ordered.

TWO HOLE HYLUG™ FLEX CONDUCTOR LONG BARREL BELLED END

TYPES YA-2TC-FXB, YAV-2TC-FXB

COPPER COMPRESSION TERMINAL

UL Listed 90° C,
600 Volts to 35kV ♦

45° and 90° angles are available.
Please contact Customer Service to order:
1-800-346-4175

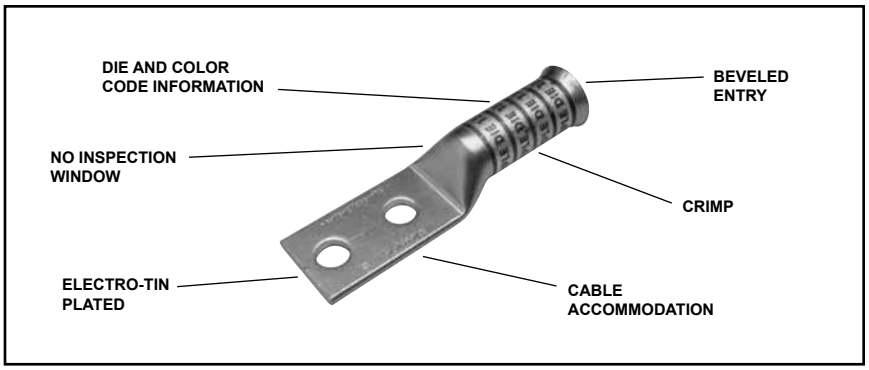

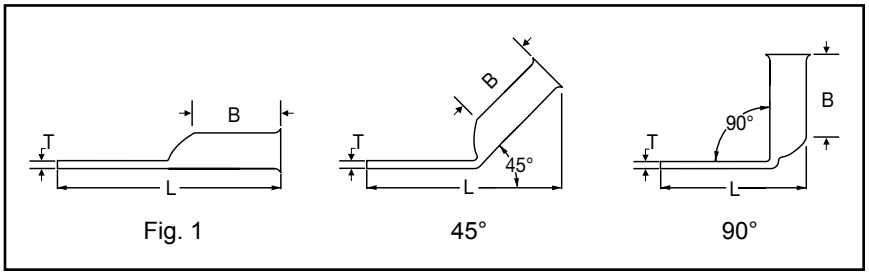

Fig. 1 45° 90°

Catalog Number	Fig #	Conductor AWG	Conductor *** MM²	Stud Hole Size	Stud Hole Spacing	Tongue Width	Figure Dimensions (B)	Figure Dimensions (T)	Figure Dimensions (L)	▲ Installation Tooling: Dieless (# of crimps)	▲ Installation Tooling: Mechanical MD6, OUR840, MD7-34R	▲ Installation Tooling: Hydraulic BCT500HS, Y500CTHS	▲ Installation Tooling: Hydraulic Y35, Y39, Y750, Y46*, PAT750	Color Code	Die Index	Wire Strip Length
YA8C2TC14E2-FXB	1	37/24 #8 Weld #8 AWG #8 Sol #6 Sol	** 10	1/4"	3/4"	0.44"	0.90"	0.08"	2.54"	Y8MRB-1 (2) Y1MRTC (2) MY29-11 (2) Y81KFT (1) Y81KFTMBH (1) PAT81KFT-18V (1)	W8CRT (2) W8CVT (2) X8CRT (2)	W8CVT (2) W8CRT (2) X8CRT (2)	U8CRT (2)	Red	49	1"
YA8C2TC38-FXB				3/8"	1"	0.58"	0.90"	0.06"	2.98"							
YAV6C2TC14-FXB	1	61/24 #6 Weld #6 AWG	** 16	1/4"	5/8"	0.48"	1.22"	0.08"	2.76"	Y1MRTC (2) MY29-11 (2) Y644HSXT (1) Y81KFT (1) Y81KFTMBH (1) PAT81KFT-18V (1)	W5CVT (2) W5CRT (2) X5CRT (2)	W5CVT (2) W5CRT (2) X5CRT (2)	U5CRT (2)	Blue	7	1-5/16"
YAV6C2TC14E2-FXB				1/4"	3/4"	0.48"	1.22"	0.08"	2.88"							
YAV6C2TC38-FXB				3/8"	1"	0.58"	1.22"	0.06"	3.32"							
YAV6C2N-FXB				1/2"	1-3/4"	0.83"	1.22"	0.12"	4.51"							
YAV4C2TC14-FXB	1	91/24 - 105/24 #4 Weld #4 AWG	—	1/4"	5/8"	0.55"	1.22"	0.09"	2.81"	Y1MRTC (4) MY29-11 (2) Y644HSXT (1) Y81KFT (1) Y81KFTMBH (1) PAT81KFT-18V (1)	W4CVT (2) W4CRT (2) X4CRT (2)	W4CVT (2) W4CRT (2) X4CRT (2)	U4CRT (2)	Gray	8	1-5/16"
YAV4C2TC14E2-FXB				1/4"	3/4"	0.55"	1.22"	0.09"	2.93"							
YAV4C2TC516-FXB				5/16"	1"	0.55"	1.22"	0.09"	3.24"							
YAV4C2TC38-FXB				3/8"	1"	0.58"	1.22"	0.09"	3.37"							
YAV4C2N-FXB				1/2"	1-3/4"	0.83"	1.22"	0.12"	4.56"							
YA3C2TC516-FXB	1	105/24 - 125/24 #3 Weld #3 AWG	—	5/16"	1"	0.55"	1.48"	0.09"	3.51"	Y1MRTC (4) MY29-11 (2) Y644HSXT (1) Y81KFT (1) Y81KFTMBH (1) PAT81KFT-18V (1)	W3CRT (2)	W3CRT (2)	U3CRT (2)	White	9	1-9/16"
YA3C2TC38-FXB				3/8"	1"	0.58"	1.48"	0.09"	3.64"							
YAV3C2NFXB				1/2″	1.75″	0.83″	1.48"	0.12″	4.83″							
YAV2C2TC14-FXB	1	125/24 - 150/24 #2 Weld #2 AWG	35	1/4"	5/8"	0.68"	1.35"	0.10"	3.00"		W2CVT (2) W2CRT (2) X2CRT (2)	W2CVT (2) W2CRT (2) X2CRT (2)	U2CRT (2)	Brown	10	1-7/16"
YAV2C2TC14E2-FXB				1/4"	3/4"	0.68"	1.35"	0.10"	3.13"							
YAV2C2TC14E1-FXB				1/4"	1"	0.68"	1.35"	0.10"	3.38"							
YAV2C2TC516-FXB				5/16"	1"	0.68"	1.35"	0.10"	3.44"							
YAV2C2TC38-FXB				3/8"	1"	0.68"	1.35"	0.10"	3.57"							
YAV2C2N-FXB				1/2"	1-3/4"	0.83"	1.35"	0.12"	4.76"							

Consult cable manufacturers for stress relief instructions

♦ For applications greater than 2000 Volts consult cable manufacturer for voltage stress relief instructions

* Use PUADP-1 adaptor with U dies in Y46 HYPRESS™

** The MM² conductor sizes referenced here are for both Class 2 and Class 5 conductors

*** The MM² conductor sizes listed are the recommendations for Class 5 conductor

‡ P-RT die sets for use in Y46 HYPRESS™ only, PUADP adapter not required

Note: All dimensions shown are for reference only.

▲ See tooling section of this catalog for complete tool and die listings. Use ONLY color-coded die recommendations for -FX connectors

Consult shielded cable manufacturers for stress relief instructions.

Blue highlighted items are industry standard and most frequently ordered.

TWO HOLE HYLUG™ FLEX CONDUCTOR LONG BARREL BELLED END (Continued)

UL Listed 90° C,
600 Volts to 35kV ♦

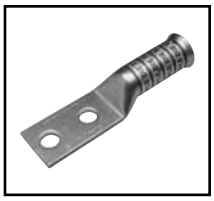

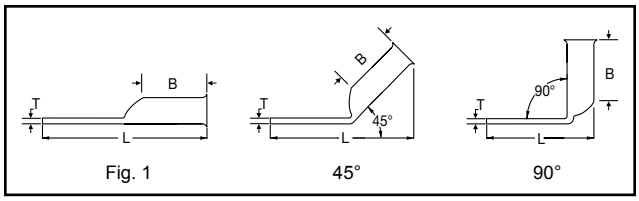

Fig. 1 45° 90°

45° and 90° angles are available.
Please contact Customer Service to order:
1-800-346-4175

Catalog Number	Fig #	Conductor AWG	Conductor *** MM²	Stud Hole Size	Stud Hole Spacing	Tongue Width	Figure Dimensions (B)	Figure Dimensions (T)	Figure Dimensions (L)	▲ Installation Tooling: Dieless (# of crimps)	▲ Installation Tooling: Mechanical MD6, OUR840, MD7-34R	▲ Installation Tooling: Hydraulic BCT500HS, Y500CTHS	▲ Installation Tooling: Hydraulic Y35, Y39 Y750, Y46* PAT750	Color Code	Die Index	Wire Strip Length
YAV1C2TC38-FXB	1	175/24-225/24 #1 Weld #1 AWG	—	3/8"	1"	0.75"	1.50"	0.12"	3.74"	MY29-11 (2) Y644HSXT (1) Y81KFT (1) Y81KFTMBH (1) PAT81KFT-18V (1)	W1CVT (2) W1CRT-1 (2) X1CRT-1 (2)	W1CVT (2) W1CRT-1 (2) X1CRT-1 (2)	U1CRT-1 (2)	Green	11	1-9/16"
YAV1C2N-FXB				1/2"	1-3/4"	0.83"	1.50"	0.11"	4.92"							
YAV252TC14-FXB	1	275/24 1/0 Weld 1/0 AWG	50	1/4"	5/8"	0.83"	1.50"	0.12"	3.21"	MY29-11 (2) Y644HSXT (1) Y81KFT (2) Y81KFTMBH (2) PAT81KFT-18V (2)	W25VT (4) W25RT (4) X25RT (4)	W25VT (4) W25RT (4) X25RT (4)	U25RT (2)	Pink	12	1-9/16"
YAV252TC14E2-FXB				1/4"	3/4"	0.83"	1.50"	0.12"	3.34"							
YAV252TC38-FXB				3/8"	1"	0.83"	1.50"	0.12"	3.78"							
YAV262TC14-FXB	1	325/24 2/0 Weld 2/0 AWG	70	1/4"	5/8"	0.93"	1.63"	0.13"	3.40"		W26VT (4) W26RT (4) X26RT (4)	W26VT (4) W26RT (4) X26RT (4)	U26RT (2)	Black	13	1-13/16"
YAV262TC14E2-FXB				1/4"	3/4"	0.93"	1.63"	0.13"	3.52"							
YAV262TC38-FXB				3/8"	1"	0.93"	1.63"	0.13"	3.96"							
YAV262NTC38-FXB				3/8"	1-3/4"	0.93"	1.63"	0.13"	4.71"							
YAV262N-FXB				1/2"	1-3/4"	0.93"	1.63"	0.13"	5.15"							
YAV272TC14E2-FXB	1	450/24 3/0 Weld 3/0 AWG	95	1/4"	3/4"	1.03"	1.64"	0.14"	3.58"		W27VT (4) W27RT (4) X27RT (6)	W27VT (4) W27RT (4) X27RT (6)	U27RT (2)	Orange	14	1-13/16"
YAV272TC38-FXB				3/8"	1"	1.03"	1.64"	0.14"	4.01"							
YAV272N-FXB				1/2"	1-3/4"	1.03"	1.64"	0.14"	5.20"							
YAV282TC14E2-FXB	1	550/24 4/0 Weld 4/0 AWG	** 120	1/4"	3/4"	1.14"	1.77"	0.14"	3.76"		W28VT (4) W28RT (4) X28RT (6)	W28VT (4) W28RT (4) X28RT (6)	U28RT (2)	Purple	15	1-7/8"
YAV282TC38-FXB				3/8"	1"	1.14"	1.77"	0.14"	4.20"							
YAV282NT38-FXB				3/8"	1"	1.14"	1.77"	0.14"	4.20"							
YAV282NTC38-FXB				3/8"	1-3/4"	1.14"	1.77"	0.14"	4.20"							
YAV282N-FXB				1/2"	1-3/4"	1.14"	1.77"	0.14"	5.39"							
YAV292TC14E2-FXB	1	550/24 4/0 Weld	—	1/4"	3/4"	1.18"	2.16"	0.16"	4.19"	Y644HSXT (1) Y81KFT (2) Y81KFTMBH (2) PAT81KFT-18V (2)	W29VT (4) X29RT (6)	W29VT (4) W29RT (4) X29RT (6)	U29RT (2)	Yellow	16	2-1/4"
YAV292TC38-FXB				3/8"	1"	1.18"	2.16"	0.16"	3.62"							
YAV292NT38-FXB				3/8"	1"	0.75"	2.16"	0.16"	5.54"							
YAV292NTC38-FXB				3/8"	1-3/4"	1.18"	2.16"	0.16"	5.37"							
YAV292N-FXB				1/2"	1-3/4"	1.18"	2.16"	0.16"	5.81"							
YA302N-FXB	1	250 Flex-CLASS G 259 Str. CLASS H 427 Str.	—	1/2"	1-3/4"	1.20"	2.16"	0.16"	5.80"							
YA312TC38-FXB	1	250 Flex 637/24 CLASS I,K,M	150	3/8"	1"	1.29"	2.18"	0.18"	4.66"		W30VT (4)	W30VT (4) W30RT (4)	U30RT (4)	White	17	2-1/4"
YA312N-FXB				1/2"	1-3/4"	1.29"	2.18"	0.18"	5.85"							

Consult cable manufacturers for stress relief instructions

♦ For applications greater than 2000 Volts consult cable manufacturer for voltage stress relief instructions

* Use PUADP-1 adaptor with U dies in Y46 HYPRESS™

** The MM² conductor sizes referenced here are for both Class 2 and Class 5 conductors

*** The MM² conductor sizes listed are the recommendations for Class 5 conductor

‡ P-RT die sets for use in Y46 HYPRESS™ only, PUADP adapter not required

Note: All dimensions shown are for reference only.

▲ See tooling section of this catalog for complete tool and die listings. Use ONLY color-coded die recommendations for -FX connectors

Consult shielded cable manufacturers for stress relief instructions.

Blue highlighted items are industry standard and most frequently ordered.

TWO HOLE HYLUG™ FLEX CONDUCTOR LONG BARREL BELLED END (Continued)

UL Listed 90° C,
600 Volts to 35kV ♦

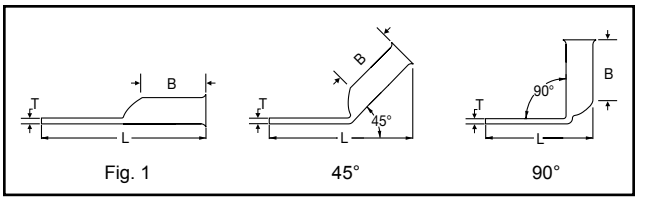

45° and 90° angles are available.
Please contact Customer Service to order:
1-800-346-4175

Catalog Number	Fig #	Conductor AWG	Conductor *** MM²	Stud Hole Size	Stud Hole Spacing	Tongue Width	Figure Dimensions (B)	Figure Dimensions (T)	Figure Dimensions (L)	▲ Installation Tooling: Dieless (# of crimps)	▲ Installation Tooling: Mechanical MD6, OUR840, MD7-34R	▲ Installation Tooling: Hydraulic BCT500HS, Y500CTHS	▲ Installation Tooling: Hydraulic Y35, Y39 Y750, Y46* PAT750	Color Code	Die Index	Wire Strip Length
YA322TC38-FXB	1	775/24 313.1 kcmil	185	3/8"	1"	1.40"	2.32"	0.19"	4.85"	Y644HSXT (1) Y81KFT (2) Y81KFTMBH (2) PAT81KFT-18V (2)	W31VT (4)	W31RT (4) W31VT (4)	U31RT (4)	Red	18	2-1/4"
YA322N-FXB				1/2"	1-3/4"	1.40"	2.32"	0.19"	6.04"							
YA342TC38-FXB	1	925/24 373.7 kcmil (350 kcmil nom.)	240	3/8"	1"	1.55"	2.48"	0.23"	5.10"		W32VT (4)	W32RT (4) W32VT (4)	U32RT (4)	Blue	19	2-9/16"
YA342N-FXB				1/2"	1-3/4"	1.55"	2.48"	0.23"	6.29"							
YA362NFXB	1	1100/24 444.4 kcmil	300	1/2"	1-3/4"	1.73"	2.95"	0.26"	6.84"		—	—	U34RT (4)	Brown	20	3-1/16"
YA382TC38-FXB	1	1325/24 535.3 kcmil (500 kcmil nom.)	300	3/8"	1"	1.84"	3.08"	0.26"	6.01"		—	—	U38XRT (4)	Pink	L99	3-3/16"
YA382N-FXB				3/8"	1-3/4"	1.84"	3.08"	0.26"	7.01"							
YA382-FXBG3				1/2"	1-3/16"	1.84"	3.08"	0.27"	6.26"							
YA382-FXBG2				1/2"	2"	1.84"	3.08"	0.27"	6.82"							
YA402N-FXB	1	1600/24 646 kcmil	400	1/2"	1-3/4"	1.98"	3.24"	0.30"	7.22"	Y644HSXT (1) Y81KFT (3) Y81KFTMBH (3) PAT81KFT-18V (3)	—	—	U39RT (4)	Black	24	3-5/16"
YA442TC38-FXB	1	1925/24 777.7 kcmil (750 kcmil nom.)	500	3/8"	1"	2.19"	3.33"	0.33"	6.44"		—	—	U44XRT (4)	Yellow	L115	3-7/16"
YA442N-FXB				1/2"	1-3/4"	2.19"	3.33"	0.33"	7.44"							
YA462N-FXB	1	2750/24 1111 kcmil (1000 kcmil nom.)	—	1/2"	1-3/4"	2.69"	3.58"	0.39"	7.91"	—	—	—	P45RT (4) ‡	—	29	3-11/16"

Consult cable manufacturers for stress relief instructions
♦ For applications greater than 2000 Volts consult cable manufacturer for voltage stress relief instructions
* Use PUADP-1 adaptor with U dies in Y46 HYPRESS™
** The MM² conductor sizes referenced here are for both Class 2 and Class 5 conductors
*** The MM² conductor sizes listed are the recommendations for Class 5 conductor
‡ P-RT die sets for use in Y46 HYPRESS™ only, PUADP adapter not required
Note: All dimensions shown are for reference only.
▲ See tooling section of this catalog for complete tool and die listings. Use ONLY color-coded die recommendations for -FX connectors
Consult shielded cable manufacturers for stress relief instructions.

Blue highlighted items are industry standard and most frequently ordered.

TWO HOLE HYLUG™ FLEX CONDUCTOR LONG BARREL NARROW TONGUE

TYPES YAZ-2-NTFX, YAZV-2NTFX

COPPER COMPRESSION NARROW TONGUE TERMINAL

UL Listed 90° C,
600 Volts to 35 kV ♦

45° and 90° angles are available.
Please contact Customer Service to order:
1-800-346-4175

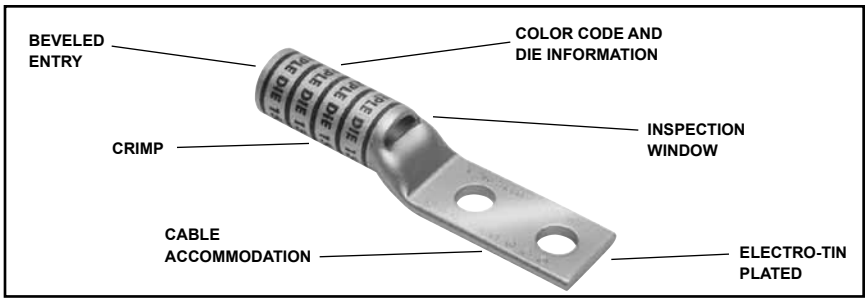

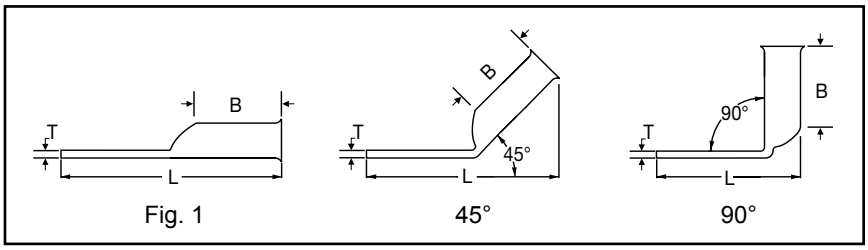

Fig. 1 45° 90°

Catalog Number	Fig. #	Conductor AWG	Conductor *** MM²	Stud Hole Size	Stud Hole Spacing	Tongue Width	Figure Dimensions (B)	Figure Dimensions (T)	Figure Dimensions (L)	▲ Installation Tooling: Dieless (# of crimps)	Mechanical: MD6, OUR840, MD7-34R	Hydraulic: BCT500HS, Y500CTHS	Hydraulic: Y35, Y39, Y750, Y46*, PAT750	Color Code	Die Index	Wire Strip Length
YAZV4C2NT14E2FX	1	#4 AWG #4 Weld 91/24 105/24	—	1/4"	0.75"	0.44"	1.25"	0.09"	2.95"	Y1MRTC (4) MY29-11 (2) Y644HSXT (1) Y81KFT (1) Y81KFTMBH (1) PAT81KFT-18V (1)	W4CVT (2) W4CRT (2) X4CRT (2)	W4CVT (2) W4CRT (2) X4CRT (2)	U4CRT (2)	Gray	8	1-5/16"
YAZV2C2NT14E2FX	1	#2 AWG #2 Weld 125/24 150/24	35	1/4"	0.75"	0.50"	1.38"	0.10"	3.14"		W2CVT (2) W2CRT (2) X2CRT (2)	W2CVT (2) W2CRT (2) X2CRT (2)	U2CRT (2)	Brown	10	1-7/16"
YAZV252NT14FX	1	1/0 AWG 1/0 Weld 275/24	—	1/4"	0.62"	0.48"	1.50"	0.12"	3.35"	Y644HS (1) Y644MBH (1) PAT644 (1) Y81KFT (2) PAT81KFT (2) Y4PC834 (2) PAT4PC834 (2)	W25VT (4) W25RT (4) X25RT (4)	W25VT (4) W25RT (4) X25RT (4)	U25RT (2)	Pink	12 or 348	1-9/16"
YAZV282NT38FX	1	4/0 AWG 4/0 Weld 550/24	—	3/8"	1.00"	0.94"	1.62"	0.17"	3.96"	MY29-11 (2) Y644HSXT (1) Y81KFT (2) Y81KFTMBH (2) PAT81KFT-18V (2)	W28VT (4) W28RT (4) X28RT (6)	W28VT (4) W28RT (4) X28RT (6)	U28RT (2)	Purple	15	1-11/16"
YAZV292NT516FX	1	4/0 Flex Class I, K, M	—	5/16"	1.00"	0.96"	2.00"	0.16"	4.28"	Y644HSXT (1) Y81KFT (2) Y81KFTMBH (2) PAT81KFT-18V (2)	W29VT (4) X29RT (8)	W29VT (4) W29RT (4) X29RT (8)	U29RT (2)	Yellow	16	2-1/16"
YAZ342NT38FX	1	373.7 kcmil 925/24 350 kcmil Flex	240	3/8"	1.00"	0.96"	2.25"	0.23"	4.85"		W32VT (4)	W32VT (4) W32RT (4)	U32RT (4)	Blue	19	2-5/16"

Consult cable manufacturers for stress relief instructions
♦ For applications greater than 2000 Volts consult cable manufacturer for voltage stress relief instructions
* Use PUADP-1 adaptor with U dies in Y46 HYPRESS™

*** The MM² conductor sizes Listed are the recommendations for Class 5 conductor.
▲ See tooling section of this catalog for complete tool and die listings. Use ONLY color-coded die recommendations for -FX connectors.

Note: All dimensions shown are for reference only.

Blue highlighted items are industry standard and most frequently ordered.

TWO HOLE HYLUG™ FLEX CONDUCTOR LONG BARREL NARROW TONGUE (Continued)

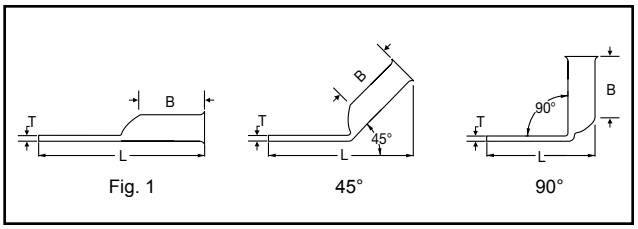

UL Listed 90° C,
600 Volts to 35 kV ♦

45° and 90° angles are available.
Please contact Customer Service to order:
1-800-346-4175

Catalog Number	Fig. #	Conductor AWG	Conductor *** MM²	Stud Hole Size	Stud Hole Spacing	Tongue Width	Figure Dimensions (B)	Figure Dimensions (T)	Figure Dimensions (L)	▲ Installation Tooling: Dieless (# of crimps)	Mechanical: MD6, OUR840, MD7-34R	Hydraulic: BCT500HS, Y500CTHS	Hydraulic: Y35, Y39, Y750, Y46*, PAT750	Color Code	Die Index	Wire Strip Length
YAZ382ENT38FX	1	535.3 kcmil 1325/24 500 kcmil Flex	300	3/8"	1.00"	1.46"	2.81"	0.27"	5.72"	Y644HSXT (1) Y81KFT (2) Y81KFTMBH (2) PAT81KFT-18V (2)	—	—	U38XRT (4)	Pink	L99	2-7/8"
YAZ382NT38FX				3/8"	1.00"	1.62"	2.81"	0.27"	5.72"		—	—				
YAZ382NNTFX				1/2"	1.75"	1.62"	2.81"	0.27"	6.72"		—	—				
YAZ442NT38FX	1	777.7 kcmil 1925/24 750 Flex	500	3/8"	1.00"	1.62"	3.00"	0.33"	6.09"		—	—	U44XRT (4)	Yellow	L115	3-1/16"

Consult cable manufacturers for stress relief instructions
♦ For applications greater than 2000 Volts consult cable manufacturer for voltage stress relief instructions
*** The MM² conductor sizes listed are the recommendations for Class 5 conductor.

* Use PUADP-1 adaptor with U dies in Y46 HYPRESS™
▲ See tooling section of this catalog for complete tool and die listings. Use ONLY color-coded die recommendations for -FX connectors

Note: All dimensions shown are for reference only.

Blue highlighted items are industry standard and most frequently ordered.

ONE HOLE HYLUG™ FLEX CONDUCTOR STANDARD BARREL LEAD PLATED

TYPE YAG-L-TC-LD

UL Listed 90° C,

600 Volts to 35kV ♦

45° and 90° angles are available.
Please contact Customer Service to order:
1-800-346-4175

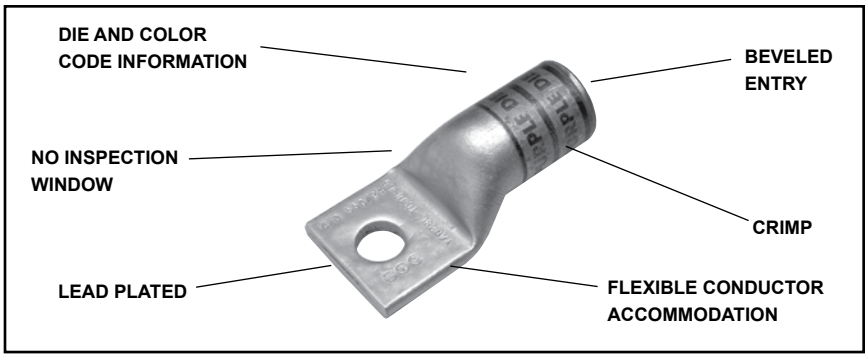

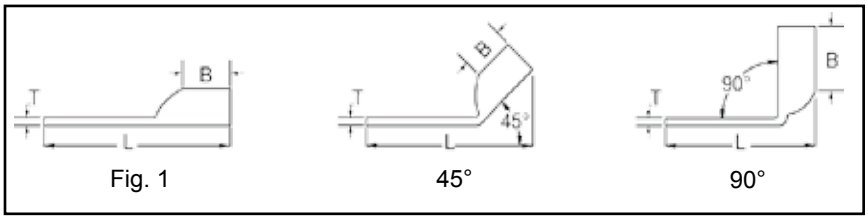

Fig. 1 45° 90°

Catalog Number	Fig #	Conductor AWG	Conductor *** MM²	Stud Hole Size	Tongue Width	Figure Dimensions (B)	Figure Dimensions (T)	Figure Dimensions (L)	▲ Installation Tooling: Dieless (# of crimps)	Mechanical: MD6, OUR840, MD7-34R	Hydraulic: BCT500HS, Y500CTHS	Hydraulic: Y35, Y39, Y750, Y46*, PAT750	Color Code	Die Index	Wire Strip Length
YAG18TC516LD	1	#22 - #18 AWG	—	5/16"	0.35"	0.32"	0.06"	1.42"	MR20 (1)				—	—	1/4"
YAG8CLTC10LD	1	37/24 #8 Weld #8 AWG #8 Sol #6 Sol	** 10	#10	0.41"	0.44"	0.08"	1.19"	MY29-11 (1) Y1MRTC (1) Y81KFT (1) Y81KFTMBH (1) PAT81KFT-18V (1)	W8CVT (1) W8CRT (1) X8CRT (1)	W8CVT (1) W8CRT (1) X8CRT (1)	U8CRT (1)	Red	49	1/2"
YAG8CLTC14LD				1/4"	0.44"	0.44″	0.08″	1.32"							
YAG8CLTC516LD				5/16"	0.52"	0.44″	0.06"	1.38"							
YAG8CLTC38LD				3/8"	0.58"	0.44″	0.06″	1.51"							
YAG8CLTC12LD				1/2"	0.71"	0.44″	0.05"	1.76"							
YAG6CLTC10LD	1	61/24 #6 Weld #6 AWG	** 16	#10	0.48"	0.50"	0.08"	1.30"	Y1MRTC (1) MY29-11 (1) Y81KFT (1) Y81KFTMBH (1) PAT81KFT-18V (1) Y644HSXT (1)	W5CVT (1) W5CRT (1) X5CRT (1)	W5CVT (1) W5CRT (1) X5CRT (1)	U5CRT (1)	Blue	7	1/2"
YAG6CLTC14LD				1/4"	0.48″	0.50″	0.08″	1.43"							
YAG6CLTC516LD				5/16"	0.52"	0.50″	0.07"	1.49"							
YAG6CLTC38LD				3/8"	0.58"	0.50″	0.06"	1.61"							
YAG6CLTC12LD				1/2"	0.75"	0.50″	0.12"	1.86"							
YAG4CLTC10LD	1	91/24-105/24 #4 Weld #4 AWG	—	#10	0.55"	0.50"	0.09"	1.36"	Y1MRTC (2) MY29-11 (1) Y81KFT (1) Y81KFTMBH (1) PAT81KFT-18V (1) Y644HSXT (1)	W4CVT (1) W4CRT (1) X4CRT (1)	W4CVT (1) W4CRT (1) X4CRT (1)	U4CRT (1)	Gray	8	1/2"
YAG4CLNT10LD				#10	0.41"	0.50″	0.09″	1.36″							
YAG4CLTC14LD				1/4"	0.55"	0.50″	0.09″	1.48"							
YAG4CLTC516LD				5/16"	0.55″	0.50″	0.09″	1.55"							
YAG4CLTC38LD				3/8"	0.58"	0.50″	0.08"	1.67"							
YAG4CLTC12LD				1/2"	0.71"	0.50″	0.07"	1.92"							
YAG2CLTC10LD	1	125/24 #2 Weld #2 AWG	35	#10	0.68"	0.63"	0.10"	1.52"		W2CRT (1) W2CVT (1) X2CRT (1)	W2CRT (1) W2CVT (1) X2CRT (1)	U2CRT (1)	Brown	10	11/16"
YAG2CLTC14LD				1/4"	0.68"	0.63″	0.10″	1.64"							
YAG2CLTC516LD				5/16"	0.68"	0.63″	0.10″	1.70"							
YAG2CLTC38LD				3/8"	0.68"	0.63″	0.10″	1.83"							
YAG2CLTC12LD				1/2"	0.73"	0.63″	0.09"	2.12"							
YAG1CLTC10LD	1	225/24 175/24-#1 Weld #1 AWG	—	#10	0.75"	0.65"	0.12"	1.54"	MY29-11 (1) Y81KFT (1) Y81KFTMBH (1) PAT81KFT-18V (1)	W1CVT (1) W1CRT-1 (1) X1CRT-1 (1)	W1CVT (1) W1CRT-1 (1) X1CRT-1 (1)	U1CRT-1 (1)	Green	11	11/16"
YAG1CLTC14LD				1/4"	0.75″	0.65″	0.12″	1.67"							
YAG1CLTC516LD				5/16"	0.75″	0.65″	0.12″	1.73"							
YAG1CLTC38LD				3/8"	0.75″	0.65″	0.12″	1.86"							
YAG1CLTC12LD				1/2"	0.75″	0.65″	0.12″	2.11"							

* Use PUADP-1 adapter with U dies in Y46 HYPRESS™

** The MM2 conductor size referenced here is for both Class 2 and Class 5 conductor.

*** The MM² conductor sizes Listed are the recommendations for Class 5 conductor.

▲ See tooling section of this catalog for complete tool and die listings.

† Alternate Tooling includes Y8MRB-1, MY29-11

♦ For applications greater than 2000 Volts consult cable manufacturer for voltage stress relief instructions.

Note: All dimensions shown are for reference only.

Blue highlighted items are industry standard and most frequently ordered.

ONE HOLE HYLUG™ FLEX CONDUCTOR STANDARD BARREL LEAD PLATED (Continued)

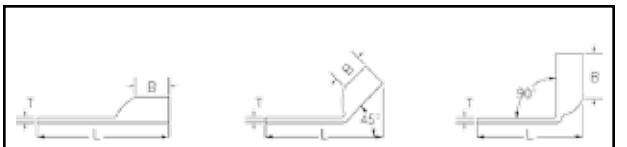

Fig. 1 45° 90°

UL Listed 90° C,

600 Volts to 35kV ♦

45° and 90° angles are available.
Please contact Customer Service to order:
1-800-346-4175

Catalog Number	Fig #	Conductor AWG	Conductor *** MM²	Stud Hole Size	Tongue Width	Figure Dimensions (B)	Figure Dimensions (T)	Figure Dimensions (L)	▲ Installation Tooling: Dieless (# of crimps)	Mechanical: MD6, OUR840, MD7-34R	Hydraulic: BCT500HS, Y500CTHS	Hydraulic: Y35, Y39, Y750, Y46*, PAT750	Color Code	Die Index	Wire Strip Length
YAG25LTC14LD	1	275/24 1/0 Weld 1/0 AWG	50	1/4″	0.83"	0.69"	0.12″	1.77″	MY29-11 (1) Y644HSXT (1) Y81KFT (1) Y81KFTMBH (1) PAT81KFT-18V (1)	W25VT (2) W25RT (2) X25RT (2)	W25VT (2) W25RT (2) X25RT (2)	U25RT (1)	Pink	12	11/16″
YAG25LTC516LD				5/16″	0.83″	0.69″	0.12″	1.84″							
YAG25LTC38LD				3/8″	0.83″	0.69″	0.12″	1.96″							
YAG25LTC12LD				1/2″	0.83″	0.69″	0.12″	2.21"							
YAG26LTC10LD	1	325/24 2/0 Weld 2/0 AWG	70	#10	0.93"	0.81"	0.13"	1.82"		W26VT (2) W26RT (2) X26RT (2)	W26VT (2) W26RT (2) X26RT (2)	U26RT (1)	Black	13	13/16"
YAG26LTC14LD				1/4″	0.93″	0.81″	0.13″	1.95″							
YAG26LTC516LD				5/16″	0.93″	0.81″	0.13″	2.01″							
YAG26LTC38LD				3/8″	0.93″	0.81″	0.13″	2.13″							
YAG26LTC12LD				1/2″	0.93″	0.81″	0.13″	2.38″							
YAG26LTC58LD				5/8″	0.93″	0.81″	0.13″	2.63″							
YAG26LTC34LD				3/4″	0.93″	0.81″	0.11"	2.89"							
YAG27LTC10LD	1	450/24 3/0 Weld 3/0 AWG	95	#10	1.03"	1.00"	0.14"	2.05"		W27VT (2) W27RT (2) X27RT (3)	W27VT (2) W27RT (2) X27RT (3)	U27RT (1)	Orange	14	1"
YAG27LTC14LD				1/4″	1.03″	1.00″	0.14″	2.18″							
YAG27LTC516LD				5/16″	1.03″	1.00″	0.14″	2.24″							
YAG27LTC38LD				3/8″	1.03″	1.00″	0.14″	2.37″							
YAG27LTC12LD				1/2"	1.03″	1.00″	0.14″	2.62"							
YAG28LTC14LD	1	550/24 4/0 Weld 4/0 AWG	** 120	1/4"	1.14"	1.03"	0.15"	2.26"		W28VT (2) W28RT (2) X28RT (3)	W28VT (2) W28RT (2) X28RT (3)	U28RT (1)	Purple	15	1-1/16"
YAG28LTC516LD				5/16"	1.14"	1.03″	0.15″	2.32"							
YAG28LTC516N66LD				5/16″	1.14"	1.03″	0.15″	2.64"							
YAG28LTC38LD				3/8"	1.14″	1.03″	0.15″	2.45"							
YAG28LTC12LD				1/2"	1.14″	1.03″	0.15″	2.70"							
YAG28LTC58LD				5/8"	1.14″	1.03″	0.15″	2.95"							
YAG29LTC516LD	1	550/24 4/0 Weld	—	5/16"	1.18"	1.03"	0.16"	2.33"	Y644HSXT (1) Y81KFT (1) Y81KFTMBH (1) PAT81KFT-18V (1)	W29VT (2) X29RT (4)	W29VT (2) W29RT (2) X29RT (4)	U29RT (1)	Yellow	16	1 1/16"
YAG29LTC38LD				3/8"	1.18″	1.03″	0.16″	2.45"							
YAG29LTC12LD				1/2"	1.18″	1.03″	0.16″	2.70"							
YAG29LTC34LD				3/4"	1.18″	1.03″	0.16″	3.14"							
YAG30LTC58LD	1	250 Flex CLASS G- 259 Str. CLASS H- 427 Str.	—	5/8"	1.20"	1.03"	0.16"	2.97"							
YAG30LTC34LD				3/4"	1.20″	1.03″	0.16″	3.16"							
YAG31LTC14LD	1	637/259 250 Flex CLASS I,K,M	150	1/4"	1.29"	1.06"	0.18"	2.35"		W30VT (2)	W30VT (2) W30RT (2)	U30RT (2)	White	17	1-1/8"
YAG31LTC516LD				5/16"	1.29"	1.06"	0.18"	2.41"							
YAG31LTC38LD				3/8"	1.29"	1.06"	0.18"	2.53"							
YAG31LTC12LD				1/2"	1.29"	1.06"	0.18"	2.78"							
YAG31LNT12LD				1/2"	0.96"	1.06"	0.18"	2.78"							
YAG31LTC58LD				5/8"	1.29"	1.06"	0.18"	3.03"							
YAG31LTC34LD				3/4"	1.29"	1.06"	0.18"	3.22"							
YAG32LTC38LD	1	775/24-300 Flex 313.1 kcmil	185	3/8"	1.40"	1.19"	0.19"	2.72"		W31VT (2)	W31VT (2) W31RT (2)	U31RT (2)	Red	18	1-1/4"
YAG32LTC12LD				1/2"	1.40″	1.19″	0.19″	2.97"							
YAG32LTC58LD				5/8"	1.40″	1.19″	0.19″	3.22"							

* Use PUADP-1 adapter with U dies in Y46 HYPRESS™

*** The MM² conductor sizes listed are the recommendations for Class 5 conductor.

** The MM² conductor size referenced here is for both Class 2 and Class 5 conductor.

▲ See tooling section of this catalog for complete tool and die listings.

† Alternate Tooling includes Y8MRB-1, MY29-11

♦ For applications greater than 2000 Volts consult cable manufacturer for voltage stress relief instructions.

Note: All dimensions shown are for reference only.

Blue highlighted items are industry standard and most frequently ordered.

ONE HOLE HYLUG™ FLEX CONDUCTOR STANDARD BARREL LEAD PLATED (Continued)

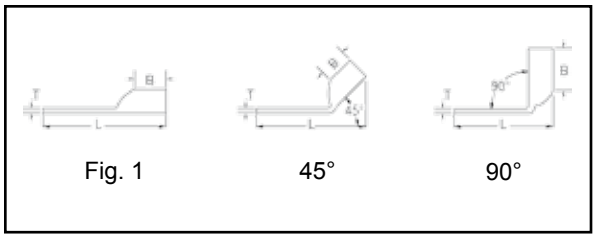

UL Listed 90° C,
600 Volts to 35kV ♦

45° and 90° angles are available.
Please contact Customer Service to order:
1-800-346-4175

Catalog Number	Fig #	Conductor AWG	Conductor MM²	Stud Hole Size	Tongue Width	Figure Dimensions (B)	Figure Dimensions (T)	Figure Dimensions (L)	▲ Installation Tooling: Dieless (# of crimps)	Mechanical: MD6, OUR840, MD7-34R	Hydraulic: BCT500HS, Y500CTHS	Hydraulic: Y35, Y39, Y750,Y46*, PAT750	Color Code	Die Index	Wire Strip Length
YAG34LTC516LD	1	925/24-350 Flex 373.7 kcmil	240	5/16"	1.55"	1.27"	0.23"	2.78"	Y644HSXT (1) Y81KFT (1) Y81KFTMBH (1) PAT81KFT-18V (1)	W32VT (2)	W32VT (2) W32RT (2)	U32RT (2)	Blue	19	1-5/16"
YAG34LTC516N66LD				5/16"	1.54"	1.27"	0.23"	3.09"							
YAG34LNT516N66LD				5/16"	0.96"	1.27"	0.23"	3.09"							
YAG34LTC38LD				3/8"	1.55"	1.27"	0.23"	2.91"							
YAG34LTC12LD				1/2"	1.55"	1.27"	0.23"	3.16"							
YAG34LTC58LD				5/8"	1.55"	1.27"	0.23"	3.41"							
YAG36LTC12LD	1	1100/24-450 Flex 444.4 kcmill	—	1/2"	1.73"	1.38"	0.27"	3.34"		—	—	U34RT (2)	Brown	20	1-3/8"
YAG36LTC58LD				5/8"	1.73"	1.38"	0.27"	3.59"							
YAG38LTC516LD	1	1325/24-500 Flex 535.3 kcmil	300	5/16"	1.84"	1.45"	0.27"	3.08"		—	—	U38XRT (2)	Pink	L99	1-7/16"
YAG38LTC38LD				3/8"	1.84"	1.45"	0.27″	3.39"							
YAG38LTC12LD				1/2"	1.84"	1.45"	0.27"	3.46"							
YAG38LTC58LD				5/8"	1.84"	1.45"	0.27"	3.71"							
YAG40LTC516LD	1	1600/24-646 kcmil 650 Flex	400	5/16"	1.96"	1.42"	0.30"	3.11"	Y644HSXT (1) Y81KFT (2) Y81KFTMBH (2) PAT81KFT-18V (2)	—	—	U39RT (2)	Black	24	1-5/16"
YAG40LTC38LD				3/8"	1.96"	1.42"	0.30"	3.42"							
YAG40LTC12LD				1/2"	1.96"	1.42"	0.30"	3.48"							
YAG40LTC58LD				5/8"	1.96"	1.42"	0.30"	3.73"							
YAG44LTC12LD	1	1925/24-750 Flex 777.7 kcmil	500	1/2"	2.18"	1.65"	0.33"	3.85"		—	—	U44XRT (2)	Yellow	L115	1-5/8"
YAG44LTC58LD				5/8"	2.18"	1.65"	0.33"	4.10"							

* Use PUADP-1 adapter with U dies in Y46 HYPRESS™
*** The MM² conductor sizes listed are the recommendations for Class 5 conductor.
▲ See tooling section of this catalog for complete tool and die listings.
† Alternate Tooling includes Y8MRB-1, MY29-11
♦ For applications greater than 2000 Volts consult cable manufacturer for voltage stress relief instructions.
Note: All dimensions shown are for reference only.

Blue highlighted items are industry standard and most frequently ordered.

TWO HOLE HYLUG™ FLEX CONDUCTOR STANDARD BARREL LEAD PLATED

TYPE YAG-L-2TC-LD

COPPER COMPRESSION TERMINAL

UL Listed 90° C,
600 Volts to 35 kV ♦

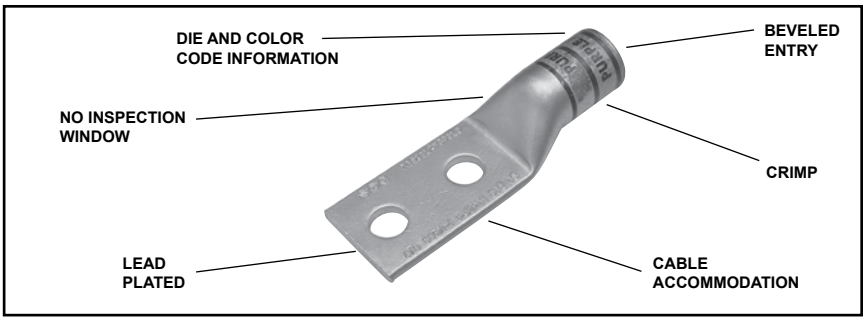

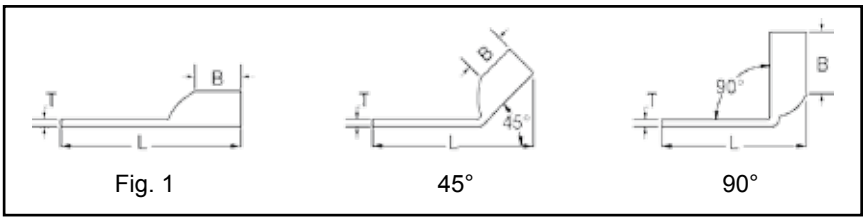

Fig. 1 45° 90°

45° and 90° angles are available.
Please contact Customer Service to order:
1-800-346-4175

Catalog Number	Fig. #	Conductor AWG	Conductor *** MM²	Stud Hole Size	Stud Hole Spacing	Tongue Width	Figure Dimensions (B)	Figure Dimensions (T)	Figure Dimensions (L)	▲ Installation Tooling: Dieless (# of Crimps)	▲ Installation Tooling: Mechanical MD6, OUR840, MD7-34R	▲ Installation Tooling: Hydraulic BCT500HS, Y500CTHS	▲ Installation Tooling: Hydraulic Y35, Y39, Y750, Y46*, PAT750	Color Code	Die Index	Wire Strip Length
YAG8CL-2TC10-LD	1	#8 Weld 37/24 #8 AWG #8 Sol #6 Sol	** 10	#10	5/8"	0.41"	0.44"	0.08"	1.84"	MRC840 (1) MY29-3 (1) MY29-11 (1) Y8MRB-1 (1) Y1MRTC (1) Y81KFT (1) Y81KFTMBH (1) PAT81KFT-18V (1)	W8CVT (1) W8CRT (1) X8CRT (1)	W8CVT (1) W8CRT (1) X8CRT (1)	U8CRT (1)	Red	49	7/16"
YAG8CL-2TC14-LD				1/4"	5/8"	0.44"	0.44"	0.08"	1.95"							
YAG8CL-2TC14E2-LD				1/4"	3/4"	0.44"	0.44"	0.08"	2.08"							
YAG8CL-2TC14E1-LD				1/4"	1"	0.44"	0.44"	0.08"	2.33"							
YAG8CL-2TC38-LD				3/8"	1"	0.58"	0.44"	0.06"	2.52"							
YAG6CL-2TC10E-LD	1	#6 Weld 61/24 #6 AWG	** 16	#10	1/2"	0.48"	0.50"	0.08"	1.81"	MY29-11 (1) Y1MRTC (1) Y81KFT (1) Y81KFTMBH (1) PAT81KFT-18V (1) Y644HSXT (1)	W5CVT (1) W5CRT (1) X5CRT (1)	W5CVT (1) W5CRT (1) X5CRT (1)	U5CRT (1)	Blue	7	1/2"
YAG6CL-2TC10-LD				#10	5/8"	0.45"	0.50"	0.08"	1.94"							
YAG6CL-2TC10E4-LD				#10	11/16"	0.44"	0.50"	0.07"	2.00"							
YAG6CL-2TC10E2-LD				#10	3/4"	0.48"	0.50"	0.08"	2.06"							
YAG6CL-2TC14-LD				1/4"	5/8"	0.48"	0.50"	0.08"	2.06"							
YAG6CL-2TC14E2-LD				1/4"	3/4"	0.48"	0.50"	0.08"	2.18"							
YAG6CL-2TC14E1-LD				1/4"	1"	0.48"	0.50"	0.08"	2.44"							
YAG6CL-2TC516-LD				5/16"	1"	0.52"	0.50"	0.07"	2.50"							
YAG6CL-2TC38-LD				3/8"	1"	0.58"	0.50"	0.06"	2.62"							
YAG6CL-2NTC-LD				1/2"	1-3/4"	0.83"	0.50"	0.12"	3.81"							
YAG4CL-2NT10-LD	1	#4 Weld 91/24 105/24 #4 AWG	—	#10	5/8"	0.41"	0.50"	0.09"	1.99"	MY29-11 (1) Y1MRTC (2) Y81KFT (1) Y81KFTMBH (1) PAT81KFT-18V (1)	W4CVT (1) W4CRT (1) X4CRT (1)	W4CVT (1) W4CRT (1) X4CRT (1)	U4CRT (1)	Gray	8	1/2"
YAG4CL-2NT10E1-LD				#10	1"	0.41"	0.50"	0.09"	2.37"							
YAG4CL-2TC14-LD				1/4"	5/8"	0.55"	0.50"	0.09"	2.11"							
YAG4CL-2TC14E2-LD				1/4"	3/4"	0.55"	0.50"	0.09"	2.24"							
YAG4CL-2TC14E1-LD				1/4"	1"	0.55"	0.50"	0.09"	2.49"							
YAG4CL-2TC516-LD				5/16"	1"	0.55"	0.50"	0.09"	2.56"							
YAG4CL-2TC38-LD				3/8"	1"	0.58"	0.50"	0.08"	2.68"							
YAG4CL-2NTC-LD				1/2"	1-3/4"	0.83"	0.50"	0.12"	3.87"							
YAG2CL-2TC14-LD	1	#2 Weld 125/24 150/24 #2 AWG	35	1/4"	5/8"	0.68"	0.63"	0.10"	2.28"		W2CVT (1) W2CRT (1) X2CRT (1)	W2CVT (1) W2CRT (1) X2CRT (1)	U2CRT (1)	Brown	10	11/16"
YAG2CL-2TC14E2-LD				1/4"	3/4"	0.68"	0.63"	0.10"	2.40"							
YAG2CL-2TC14E1-LD				1/4"	1"	0.68"	0.63"	0.10"	2.63"							
YAG2CL-2TC516-LD				5/16"	1"	0.68"	0.63"	0.10"	2.71"							
YAG2CL-2TC38-LD				3/8"	1"	0.68"	0.63"	0.10"	2.84"							
YAG2CL-2NTC-LD				1/2"	1-3/4"	0.83"	0.63"	0.08"	4.03"							

* Use PUADP-1 adapter with U dies in Y46 Hypress™.
** The MM² conductor size referenced here is for both Class 2 and Class 5 conductor.
*** The MM² conductor sizes listed are the recommendations for Class 5 conductor.
♦ For applications greater than 2000 Volts consult cable manufacturer for voltage stress relief instructions.
Note: All dimensions shown are for reference only.

Blue highlighted items are industry standard and most frequently ordered.

TWO HOLE HYLUG™ FLEX CONDUCTOR STANDARD BARREL LEAD PLATED (Continued)

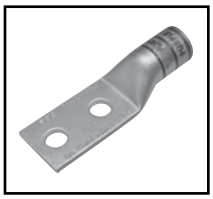

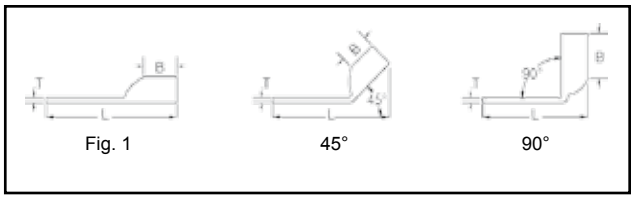

Fig. 1 45° 90°

UL Listed 90° C,
600 Volts to 35kV ♦

45° and 90° angles are available.
Please contact Customer Service to order:
1-800-346-4175

Catalog Number	Fig. #	Conductor AWG	Conductor *** MM²	Stud Hole Size	Stud Hole Spacing	Tongue Width	Figure Dimensions (B)	Figure Dimensions (T)	Figure Dimensions (L)	▲ Installation Tooling: Dieless (# of Crimps)	Mechanical: MD6, OUR840, MD7-34R	Hydraulic: BCT500HS, Y500CTHS	Hydraulic: Y35, Y39, Y750, Y46*, PAT750	Color Code	Die Index	Wire Strip Length
YAG1CL-2TC14-LD	1	#1 Weld 175/24 225/24 #1 AWG	—	1/4"	5/8"	0.75"	0.62"	0.12"	2.30"	MY29-11 (1) Y644HSXT (1) Y81KFT (1) Y81KFTMBH (1) PAT81KFT-18V (1)	W1CVT (1) W1CRT-1 (1) X1CRT-1 (1)	W1CVT (1) W1CRT-1 (1) X1CRT-1 (1)	U1CRT-1 (1)	Green	11	11/16"
YAG1CL-2TC14E2-LD				1/4"	3/4"	0.75"	0.69"	0.12"	2.49"							
YAG1CL-2TC14E1-LD				1/4"	1"	0.75"	0.69"	0.12"	2.73"							
YAG1CL-2TC516-LD				5/16"	1"	0.75"	0.62"	0.12"	2.74"							
YAG1CL-2TC38-LD				3/8"	1"	0.75"	0.62"	0.12"	2.87"							
YAG1CL-2NTC-LD				1/2"	1-3/4"	0.83"	0.62"	0.11"	4.06"							
YAG25L-2TC14-LD	1	1/0 Weld 275/24 1/0 AWG	50	1/4"	5/8"	0.83"	0.69"	0.12"	2.41"		W25VT(2) W25RT(2) X25RT(2)	W25VT (2) W25RT (2) X25RT (2)	U25RT (1)	Pink	12	11/16"
YAG25L-2TC14E2-LD				1/4"	3/4"	0.83"	0.69"	0.12"	2.53"							
YAG25L-2TC516E2-LD				5/16"	3/4"	0.83"	0.69"	0.12"	2.60"							
YAG25L-2TC516-LD				5/16"	1"	0.83"	0.69"	0.12"	2.85"							
YAG25L-2TC38-LD				3/8"	1"	0.83"	0.69"	0.12"	2.97"							
YAG25L-2NTC-LD				1/2"	1-3/4"	0.83"	0.69"	0.12"	4.16"							
YAG25L-2TC12E1-LD				1/2"	1"	0.83"	0.69"	0.12"	3.22"							
YAG26L-2TC14-LD	1	2/0 Weld 325/24 2/0 AWG	70	1/4"	5/8"	0.93"	0.81"	0.13"	2.58"		W26VT (2) W26RT (2) X26RT (2)	W26VT (2) W26RT (2) X26RT (2)	U26RT (1)	Black	13	13/16"
YAG26L-2TC14E2-LD				1/4"	3/4"	0.93"	0.81"	0.13"	2.71"							
YAG26L-2TC516-LD				5/16"	1"	0.93"	0.81"	0.13"	3.02"							
YAG26L-2TC38-LD				3/8"	1"	0.93"	0.81"	0.13"	3.14"							
YAG26L-2NTC-LD				1/2"	1-3/4"	0.93"	0.81"	0.13"	4.33"							
YAG27L-2TC14-LD	1	3/0 Weld 450/24 3/0 AWG	95	1/4"	5/8"	1.03"	1.00"	0.14"	2.81"		W27VT (2) W27RT (2) X27RT (3)	W27VT (2) W27RT (2) X27RT (3)	U27RT (1)	Orange	14	1"
YAG27L-2TC14E2-LD				1/4"	3/4"	1.03"	1.00"	0.14"	2.94"							
YAG27L-2TC516-LD				5/16"	1"	1.03"	1.00"	0.14"	3.25"							
YAG27L-2TC38-LD				3/8"	1"	1.03"	1.00"	0.14"	3.38"							
YAG27L-2NTC-LD				1/2"	1-3/4"	1.03"	1.00"	0.14"	4.56"							
YAG28L-2TC14-LD	1	4/0 Weld 550/24 4/0 AWG	120	1/4"	5/8"	1.14"	1.03"	0.15"	2.90"		W28VT (2) W28RT (2) X28RT (3)	W28VT (2) W28RT (2) X28RT (3)	U28RT (1)	Purple	15	1-1/16"
YAG28L-2TC14E2-LD				1/4"	3/4"	1.14"	1.03"	0.15"	3.02"							
YAG28L-2TC516-LD				5/16"	1"	1.14"	1.03"	0.15"	3.33"							
YAG28L-2TC38-LD				3/8"	1"	1.14"	1.03"	0.15"	3.46"							
YAG28L-2NT38-LD				3/8"	1"	0.94"	1.03"	0.17"	3.48"							
YAG28L-2TC12E1-LD				1/2"	1"	1.14"	1.03"	0.17"	3.71"							
YAG28L-2TC12-LD				1/2"	1-1/4"	1.14"	1.03"	0.15"	3.96"							
YAG28L-2NTC-LD				1/2"	1-3/4"	1.14"	1.03"	0.15"	4.65"							
YAG29L-2TC14-LD	1	4/0 Flex 250 Code	—	1/4"	5/8"	1.14"	1.03"	0.16"	2.90"	Y644HSXT (1) Y81KFT (1) Y81KFTMBH (1) PAT81KFT-18V (1)	W29VT (2) X29RT (4)	W29VT (2) W29RT (2) X29RT (4)	U29RT (1)	Yellow	16	1-1/16"
YAG29L-2TC14E2-LD				1/4"	3/4"	1.18"	1.03"	0.16"	3.03"							
YAG29L-2TC516-LD				5/16"	1"	1.18"	1.03"	0.16"	3.34"							
YAG29L-2TC38-LD				3/8"	1"	1.18"	1.03"	0.16"	3.43"							
YAG29L-2NT38-LD				3/8"	1"	0.94"	1.03"	0.16"	3.48"							
YAG29L-2TC12E1-LD				3/8"	1"	1.14"	1.03"	0.16"	3.71"							
YAG29L-2TC12-LD				1/2"	1-1/4"	1.18"	1.03"	0.16"	3.96"							
YAG29L-2NTC-LD				1/2"	1-3/4"	1.18"	1.03"	0.16"	4.65"							

* Use PUADP-1 adapter with U dies in Y46 Hypress™.

** The MM² conductor size referenced here is for both Class 2 and Class 5 conductor.

*** The MM² conductor sizes listed are the recommendations for Class 5 conductor.

♦ For applications greater than 2000 Volts consult cable manufacturer for voltage stress relief instructions.

Note: All dimensions shown are for reference only.

Blue highlighted items are industry standard and most frequently ordered.

TWO HOLE HYLUG™ FLEX CONDUCTOR STANDARD BARREL LEAD PLATED (Continued)

UL Listed 90° C,
600 Volts to 35kV ♦

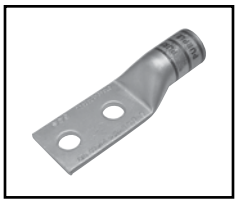

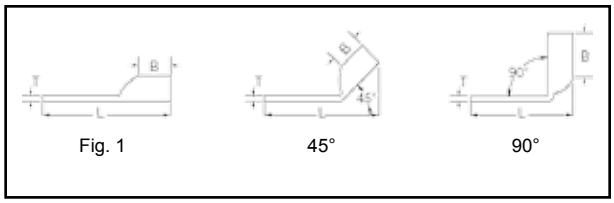

45° and 90° angles are available.
Please contact Customer Service to order:
1-800-346-4175

Catalog Number	Fig. #	Conductor AWG	Conductor *** MM²	Stud Hole Size	Stud Hole Spacing	Tongue Width	Figure Dimensions (B)	Figure Dimensions (T)	Figure Dimensions (L)	▲ Installation Tooling: Dieless (# of Crimps)	Mechanical: MD6, OUR840, MD7-34R	Hydraulic: BCT500HS, Y500CTHS	Hydraulic: Y35, Y39, Y750, Y46*, PAT750	Color Code	Die Index	Wire Strip Length
YAG30L-2TC38-LD	1	250 kcmil CLASS G 259 Str. CLASS H 427 Str.	—	3/8"	1"	1.20"	1.03"	0.16"	3.48"	Y644HSXT (1) Y81KFT (1) Y81KFTMBH (1) PAT81KFT-18V (1)	W29VT (2) X29RT (4)	W29VT (2) W29RT (2) X29RT (4)	U29RT (1)	Yellow	16	1-1/16"
YAG30L-2TC12-LD				1/2"	1-1/4"	1.20"	1.03"	0.16"	3.98"							
YAG30L-2NTC-LD				1/2"	1-3/4"	1.20"	1.03"	0.16"	4.67"							
YAG31L-2TC38-LD	1	250 Weld 637/24 CLASS I, K, M	150	3/8"	1"	1.29"	1.06"	0.18"	3.54"		W30VT(2)	W30VT (2) W30RT (2)	U30RT (2)	White	17	1-1/8"
YAG31L-2NTC38-LD				3/8"	1-3/4"	1.29"	1.06"	0.18"	3.54"							
YAG31L-2TC12-LD				1/2"	1-1/4"	1.29"	1.06"	0.18"	4.04"							
YAG31L-2NTC-LD				1/2"	1-3/4"	1.29"	1.06"	0.18"	4.73"							
YAG32L-2TC38-LD	1	775/24 313.1 kcmil	185	3/8"	1"	1.40"	1.19"	0.19"	3.73"		W31VT (2)	W31VT (2) W31RT (2)	U31RT (2)	Red	18	1-1/4"
YAG32L-2NTC-LD				1/2"	1-3/4"	1.40"	1.19"	0.19"	4.91"							
YAG34L-2TC516-LD	1	373.7 kcmil 925/24 350 kcmil CLASS I	240	5/16"	1"	1.55"	1.27"	0.23"	3.79"		W32VT (2)	W32VT (2) W32RT (2)	U32RT (2)	Blue	19	1-5/16"
YAG34L-2TC38-LD				3/8"	1"	1.55"	1.27"	0.23"	3.92"							
YAG34L-2NT38-LD				3/8"	1-3/4"	0.96"	1.27"	0.23"	3.92"							
YAG34L-2TC12-LD				1/2"	1-1/4"	1.55"	1.27"	0.23"	4.42"							
YAG34L-2NTC-LD				1/2"	1-3/4"	1.55"	1.27"	0.23"	5.11"							
YAG36L-2TC38-LD	1	1100/24 444.4 kcmil	—	3/8"	1"	1.73"	1.38"	0.27"	4.28"		—	—	U34RT(2) U31ART(1)	Brown	20	1-3/8"
YAG36L-2NTC-LD				1/2"	1-3/4"	1.73"	1.38"	0.27"	5.28"							
YAG38L-2TC516-LD	1	535.3 kcmil 1325/24 500 kcmil CLASS I	300	5/16"	1"	1.82"	1.45"	0.27"	4.09"		—	—	U38XRT (2)	Pink	L99	1-3/8"
YAG38L-2NT38-LD				3/8"	1"	1.63"	1.45"	0.27"	4.40"							
YAG38L-2TC38-LD				3/8"	1"	1.82"	1.45"	0.27"	4.40"							
YAG38L-2TC12-LD				1/2"	1-1/4"	1.82"	1.45"	0.27"	4.72"							
YAG38L-2NTC-LD				1/2"	1-3/4"	1.82"	1.45"	0.27"	5.40"							
YAG39L-2NTC-LD	1	600 kcmil	—	1/2"	1-3/4"	1.90"	1.19"	0.27"	5.29"	Y644HSXT (1) Y81KFT (2) Y81KFTMBH (2) PAT81KFT-18V (2)	—	—	U38RT (2)	Purple	400	1-3/8"
YAG40L-2TC38-LD	1	646 kcmil 1600/24	400	3/8"	1"	1.98"	1.42"	0.30"	4.43"		—	—	U39RT (2)	Black	24	1-5/16"
YAG40L-2NNT-LD				1/2"	1-3/4"	1.63"	1.42"	0.30"	5.43"							
YAG40L-2NTC-LD				1/2"	1-3/4"	1.98"	1.42"	0.30"	5.43"							
YAG44L-2TC38-LD	1	777.7 kcmil 1925/24 750 kcmil CLASS I	500	3/8"	1"	2.18"	1.65"	0.33"	4.80"				U44XRT (2)	Yellow	L115	1-5/8"
YAG44L-2TC12-LD				1/2"	1-1/4"	2.18"	1.65"	0.33"	5.11"							
YAG44L-2TC12E3-LD				1/2"	1-1/2"	2.18"	1.65"	0.33"	5.36"							
YAG44L-2NTC-LD				1/2"	1-3/4"	2.18"	1.65"	0.33"	5.80"							
YAG44L-2TC58-LD				5/8"	1-1/2"	2.18"	1.65"	0.33"	5.61"							

* Use PUADP-1 adapter with U dies in Y46 Hypress™.
** The MM² conductor size referenced here is for both Class 2 and Class 5 conductor.
*** The MM² conductor sizes listed are the recommendations for Class 5 conductor.
♦ For applications greater than 2000 Volts consult cable manufacturer for voltage stress relief instructions.

Note: All dimensions shown are for reference only.

Blue highlighted items are industry standard and most frequently ordered.

TYPE YAS-L-2TC-FX,60

TWO HOLE HYLUG™ - DOUBLE BARREL

COPPER COMPRESSION TERMINAL

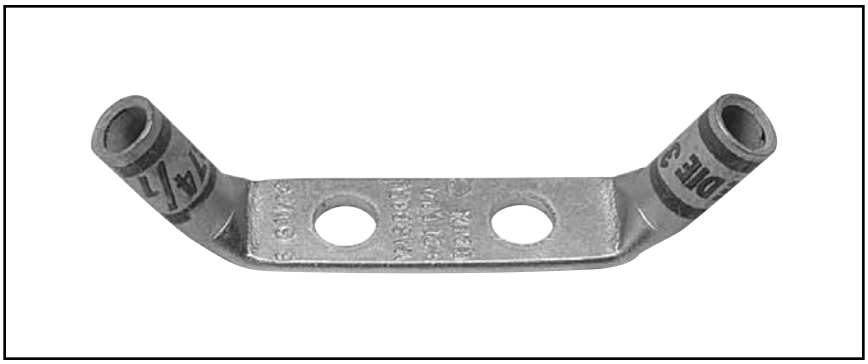

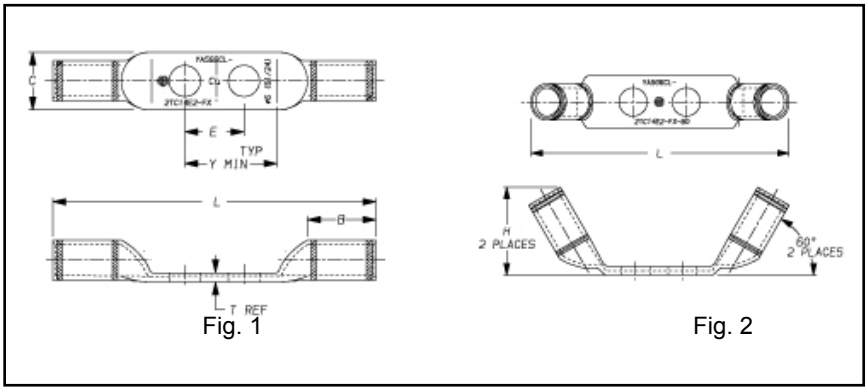

Fig. 1 Fig. 2

Catalog Number	Conductor Flex	Conductor AWG	Conductor ** MM²	Bolt Size	Fig. No.	Dimensions B	Dimensions C	Dimensions E	Dimensions H	Dimensions L	Dimensions T Ref.	Dimensions Y Min.	Installation Tooling Die Index	Installation Tooling Color Code	Mechanical MD7-34 MD6 OUR840	Mechanical Y1MRTC	Hydraulic Y750, Y35, Y39, Y46*	Wire Strip Length
YASG6CL-2TC14E2-FX	#6 Weld 61/24	#6 AWG	16	1/4"	1	0.50	0.48	0.75	—	3.0 (78)	0.08 (2)	1.14 (29)	7	Blue	W5CVT (1) W5CRT (1)	Y1MRTC (1)	U5CRT (1)	9/16"
YASV6CL-2TC14E2-FX**	#6 Weld 61/24	#6 AWG	16	1/4"	1	0.50	0.48	0.75	—	3.0 (78)	0.08 (2)	1.14 (29)	7	Blue	W5CVT (1) W5CRT (1)	Y1MRTC (1)	U5CRT (1)	9/16"
YASV6CL-2TC14E2-FX-60**	#6 Weld 61/24	#6 AWG	16	1/4"	2	0.50	0.48	0.75	0.73	2.9 (75)	0.08 (2)	1.14 (29)	7	Blue	W5CVT (1) W5CRT (1)	Y1MRTC (1)	U5CRT (1)	9/16"

♦ For applications greater than 2000 Volts consult cable manufacturer for voltage stress relief instructions.
* Use PUADP-1 adapter with U dies in Y46 HYPRESS™.
** Type YASV series have inspection hole.
*** The MM² conductor sizes listed are the recommendations for Class 2 and Class 5 conductor.

Note: All dimensions shown are for reference only.

Blue highlighted items are industry standard and most frequently ordered.

TWO HOLE SLOTTED HYLUG™ STANDARD BARREL

TYPES YA-L2TC-SL AND YAV-L2TC-FXSL

Electro-Tin Plated

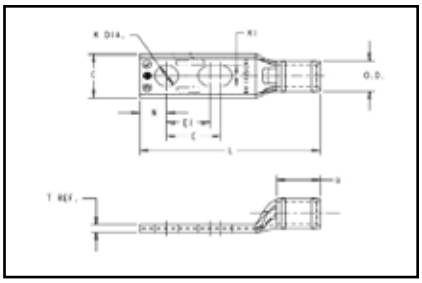

COPPER COMPRESSION TERMINAL

UL Listed 90° C,
600 Volts to 35 kV

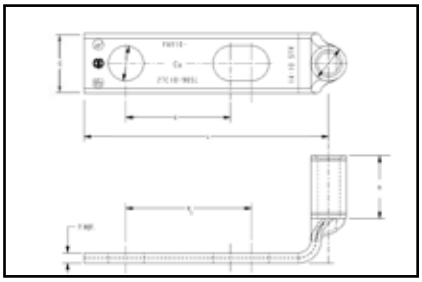

Compression Slotted Lugs connect copper or tinned copper conductors to bus bars, CPI Racks, Cabinets or Cable Runway. Slotted and 90° Slotted lugs have one round and one oblong hole to match hole spacing on equipment mounting rails on CPI Racks and Cabinets and on most bus bars.

Features & Benefits

- Slotted stud provides built in flexibility for the terminal to conform to spacing requirements
- Accommodates a wide range of conductor combinations (AWG, Compact, DLO, Flex and Metric).

Catalog Number	Cond. Size	Stud Hole Size	Tongue Width	Dimensions (Inch)					Installation Tooling (# of crimps)						Wire Strip Length
				B	T	L	E	E1	Dieless	Mechanical	Hydraulic		Color Code	Die Index	
										MD6, OUR840, MD7-34R	PATMD6, Y500CTHS PAT60018V	Y35, Y39, Y750 Y46, PAT750			
YA6CL2TC14E2SL	#6 AWG	1/4"	0.45"	0.81"	0.08"	2.47"	0.62"	0.75"	Y1MRTC (1) MY29-3 (1) MY29-11 (1) Y644HSXT-18V (1) PAT644XT-18V (1)	W5CVT (1) W5CRT (1) X5CRT (1) X8CART (1)	W5CVT (1) W5CRT (1)	U5CRT (1) U8CABT (1)	Blue	7 or 374	7/8"
YAV6CL2TC10FX90SL*	61/24 #6 WELD #6 AWG	#10	0.48"	0.50"	0.08"	1.54"	0.62"	0.75"	Y1MRTC (1) MY29-3 (1) MY29-11 (1) Y644HSXT-18V (1) PAT644XT-18V (1)	W5CVT (1) W5CRT (1) X5CRT (1) X8CART (1)	W5CVT (1) W5CRT (1)	U5CRT (1) U8CABT (1)	Blue	7 or 374	1/2"
YAV4CL2TC14FXSL	#4 AWG	1/4"	0.55"	0.50"	0.09"	2.08"	0.50"	0.62"	Y1MRTC (2) MY29-11 (1) Y644HSXT-18V (1) PAT644XT-18V (1)	W4CVT (1) W4CRT (1) X4CRT (1)	W4CVT (1) W4CRT (1) X4CRT (1)	U4CRT (1)	Gray	8	9/16"
YAV4CL2TC38FXSL		3/8"	0.58"	0.50"	0.08"	2.68"	0.75"	1.00"							
YAV2CL2TC14FXSL	#2 AWG	1/4"	0.68"	0.62"	0.10"	2.26"	0.50"	0.62"		W2CVT (1) W2CRT (1) X2CRT (1)	W2CVT (1) W2CRT (1) X2CRT (1)	U2CRT (1)	Brown	10	11/16"
YAV2CL2TC38FXSL		3/8"	0.68"	0.62"	0.10"	2.82"	0.75"	1.00"							
YA44L2NNTFXSL	750 kcmil	5/8"	1.63"	1.65"	0.33"	5.74"	1.58"	1.75"	Y81KFT (2) Y1MRTC (2) Y644HSXT-18V (1) PAT81KFT-18V (2)	—	—	U44XRT (2)	Yellow	L115	1-2/3"

* Denotes 90° Angle
Note: All dimensions shown are for reference only.

Blue highlighted items are industry standard and most frequently ordered.

TWO HOLE SLOTTED HYLUG™ LONG BARREL

TYPE YA-2TC-SL

Copper Compression Terminals

UL Listed 90° C,
600 Volts to 35 kV

Compression Slotted Lugs connect copper or tinned copper conductors to bus bars, CPI Racks, Cabinets or Cable Runway. Slotted and 90° Slotted lugs have one round and one obround hole to match hole spacing on equipment mounting rails on CPI Racks and Cabinets and on some bus bars.

Electro-Tin Plated

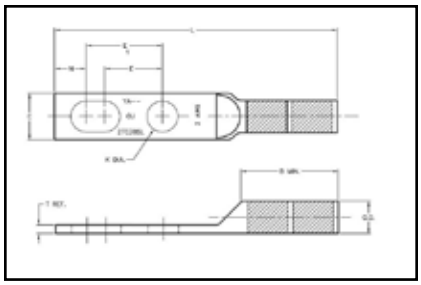

Features & Benefits

- Slotted stud provides built in flexibility for the terminal to conform to various space requirements.
- Accommodates a wide range of conductor combinations (AWG, Compact, DLO, Flex and Metric).

Catalog Number	Wire Size	Stud Hole Size	Tongue Width	Figure Dimensions (B)	(T)	(L)	(E)	(E1)	Installation Tooling (# of crimps): Dieless	Mechanical: MD6, OUR840, MD7-34R	Hydraulic: BCT500HS, Y500CTHS	Hydraulic: Y35, Y39, Y750 Y46, PAT750	Color Code	Die Index	Wire Strip Length
YA6C2TC38SL	#6 AWG	3/8"	0.58"	1.12"	0.06"	3.22"	0.75"	1.0"	Y1MRTC (2) MY29-3 (2) MY29-11 (2) MRC840 (2) Y81KFTMBH (1) Y81KFT (1) PAT81KFT (1)	W5CVT (2) W5CRT (2)	W5CVT (2) W5CRT (2)	U5CRT (2)	Blue	7 or 374	1-3/16
YA6C2TC38SLBOX500	#6 AWG	3/8"	0.58"	1.12"	0.06"	3.22"	0.75"	1.0"							
YA3C2TC38SL	#3 AWG	3/8"	0.58"	1.25"	0.08"	3.43"	0.75"	1.0"	Y1MRTC (4) MY29-3 (2) MY29-11 (2) MRC840 (2) Y644HSXT (1) PAT644HSXT (1) PAT81KFT (1) Y81KFT (1)	W3CRT (2)	W3CRT (2)	U3CRT (2)	White	9	1 5/16
YA3C2TC38SLBOX500	#3 AWG	3/8"	0.58"	1.25"	0.08"	3.43"	0.75"	1.0"							
YA2C2TC38SL	#2 AWG	3/8"	0.60"	1.25"	0.11"	3.42"	0.75"	1.0"		W2CVT (2) W2CRT (2)	W2CVT (2) W2CRT (2)	U2CRT (2)	Brown	10	1-5/16
YA2C2TC38SLBOX500	#2 AWG	3/8"	0.60"	1.25"	0.11"	3.42"	0.75"	1.0"							

Note: All dimensions shown are for reference only.

TWO HOLE SLOTTED HYLUG™ LONG BARREL WITH INSPECTION WINDOW

TYPE YAZ-2TC-SL

COPPER COMPRESSION TERMINAL

UL Listed 90° C,
600 Volts to 35 kV

Compression Slotted Lugs connect copper or tinned copper conductors to bus bars, CPI Racks, Cabinets or Cable Runway. Slotted and 90° Slotted lugs have one round and one obround hole to match hole spacing on equipment mounting rails on CPI Racks and Cabinets and on some bus bars.

Electro-Tin Plated

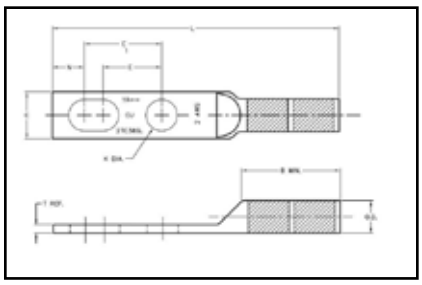

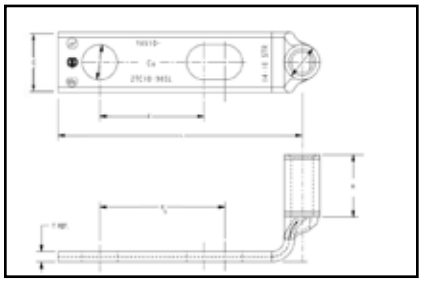

Features & Benefits

- Slotted stud provides built in flexibility for the terminal to conform to various space requirements.
- Accommodates a wide range of conductor combinations (AWG, Compact, DLO, Flex and Metric).

Catalog Number	Wire Size	Stud Hole Size	Tongue Width	Figure Dimensions (B)	(T)	(L)	(E)	(E1)	Installation Tooling (# of crimps): Dieless	Mech. MD6, OUR840, MD7-34R	Hydraulic BCT500HS, Y500CTHS	Hydraulic Y35, Y39, Y750 Y46, PAT750	Color Code	Die Index	Wire Strip Length
YAZ8C2TC10SL	#8 AWG	#10	0.41"	0.75"	0.08"	2.21"	0.62"	0.75"	Y1MRTC (2) Y8MRB-1 (2) MY29-3 (1) MY29-11 (2) PAT81KFT-18V (1) MRC840 (2)	W8CVT (2) W8CRT (2) X8CRT (2)	W8CRT (2)	U8CRT (2)	Red	49	13/16"
YAZ8C2TC1090SL*		#10	0.41"	0.75"	0.08"	1.50"	0.62"	0.75"							
YAZ6C2TC38SL	#6 AWG	3/8"	0.58"	1.12"	0.08"	3.22"	0.75"	1.00"	Y1MRTC (2) Y8MRB-1 (2) MY29-3 (1) MY29-11 (2) MRC840 (2) Y81KFT (1) Y81KFTMBH (1) PAT81KFT-18V (1)	W5CVT (2) W5CRT (2)	W5CVT (2) W5CRT (2)	U5CRT (2)	Blue	7 or 374	1-3/16"
YAZ6C2TC38SLBOX500		3/8"	0.58"	1.12"	0.08"	3.22"	0.75"	1.00"							
YAZ3C2TC38SL	#3 AWG	3/8"	0.58"	1.25"	0.08"	3.39"	0.75"	1.00"	Y1MRTC (4) MRC840 (2) PAT81KFT-18V (1) Y81KFT (1) Y81KFTMBH (1) MY29-3 (2) MY29-11 (2) Y644HSXT (1) PAT644HSXT (1)	W3CRT (2)	W3CRT (2)	U3CRT (2)	White	9	1-5/16"
YAZ3C2TC38SLBOX500		3/8"	0.58"	1.25"	0.08"	3.43"	0.75"	1.00"							
YAZ2C2TC38SL	#2 AWG	3/8"	0.60"	1.25"	0.11"	3.41"	0.75"	1.00"		W2CVT (2) W2CRT (2)	W2CVT (2) W2CRT (2)	U2CRT (2)	Brown	10	1-5/16"
YAZ2C2TC38SLBOX500		3/8"	0.60"	1.25"	0.11"	3.42"	0.75"	1.00"							

* Denotes 90° Angle
Note: All dimensions shown are for reference only.

Blue highlighted items are industry standard and most frequently ordered.

TWO HOLE SLOTTED HYLUG™ LONG BARREL WITH INSPECTION WINDOW

TYPES YAV-2TC-SL AND YAZV-2TC-FXSL

COPPER COMPRESSION TERMINAL

UL Listed 90° C,
600 Volts to 35 kV

Compression Slotted Lugs connect copper or tinned copper conductors to bus bars, CPI Racks, Cabinets or Cable Runway. Slotted and 90° Slotted lugs have one round and one oblong hole to match hole spacing on equipment mounting rails on CPI Racks and Cabinets and on most bus bars.

Electro-Tin Plated

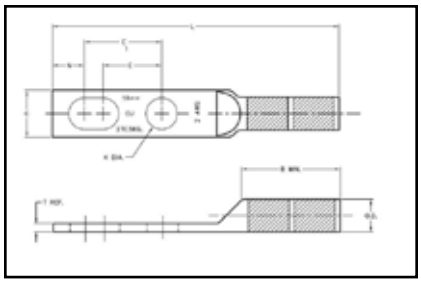

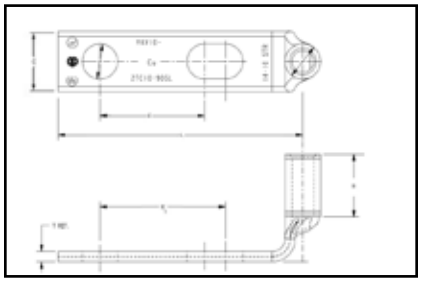

Features & Benefits

- Slotted stud provides built in flexibility for the terminal to conform to various space requirements.
- Accommodates a wide range of conductor combinations (AWG, Compact, DLO, Flex and Metric).

Catalog Number	Cond. Size	Stud Hole Size	Tongue Width	Dimensions					Installation Tooling (# of crimps)						Wire Strip Length
				B	T	L	E	E1	Dieless	Mech.	Hydraulic		Color Code	Die Index	
										MD6, OUR840, MD7-34R	PATMD6, Y500CTHS PAT60018V	Y35, Y39, Y750 Y46, PAT750			
YAV102TC1090SL	#14 - #10 AWG	#10	0.36"	0.38"	0.06"	1.46"	0.63"	0.75"	Y8MRB-1 (1)	—	—	—	—	—	7/16"
YAZV102TC14SL		1/4"	0.41"	0.69"	0.05"	2.28"	0.62"	0.75"							3/4"
YAZV6C2TC10FX90SL*	#6 AWG	#10	0.48"	0.75"	0.08"	1.50"	0.75"	1.00"	YIMRTC (2) Y8MRB-1 (2) MY29-3 (1) MY29-11 (2) MRC840 (2) Y81KFT (1) Y81KFTMBH (1) PAT81KFT-18V (1)	W5CVT (2) W5CRT (2)	W5CVT (2) W5CRT (2)	U5CRT (2)	Blue	7 or 374	1-3/16"
YAZV6C2TC14FXSLBOX500		1/4	0.58"	1.12"	0.08"	3.22"	0.63"	1.00"							
YAZV6C2TC14FXSL		1/4	0.58"	1.12"	0.08"	3.22"	0.63"	1.00"							
YAZV6C2TC38FXSLBOX500		3/8"	0.58"	1.12"	0.08"	3.22"	0.63"	1.00"							
YAZV6C2TC38FXSL		3/8"	0.58"	1.12"	0.08"	3.22"	0.63"	1.00"							
YAZV4C2TC14FXSL	#4 AWG	1/4"	0.55"	1.25"	0.09"	2.95"	0.63"	1.00"	Y1MRTC (4) MY29-3 (2) MY29-11 (2) MRC840 (2) Y644HSXT (2) Y81KFT (1) Y81KFTMBH (1) PAT81KFT-18V (1)	W4CVT (2) W4CRT (2) X4CRT (2)	W4CVT (2) W4CRT (2) X4CRT (2)	U4CRT (2)	Gray	8 or 346	1-5/16"
YAZV4C2TC14FXSLBOX500		1/4"	0.55"	1.25"	0.09"	2.95"	0.63"	1.00"							
YAZV4C2TC38FXSL		3/8"	0.55"	1.25"	0.09"	2.95"	0.63"	1.00"							
YAZV4C2TC38FXSLBOX500		3/8"	0.55"	1.25"	0.09"	2.95"	0.63"	1.00"							

* Denotes 90° Angle
Note: All dimensions shown are for reference only.

Blue highlighted items are industry standard and most frequently ordered.

TWO HOLE SLOTTED HYLUG™ LONG BARREL WITH INSPECTION WINDOW

TYPES YAZ-2TC-SL AND YAZV-2TC-SL
(Continued)

Electro-Tin Plated

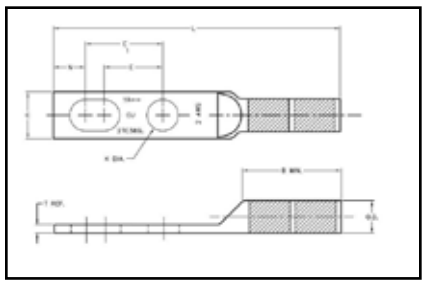

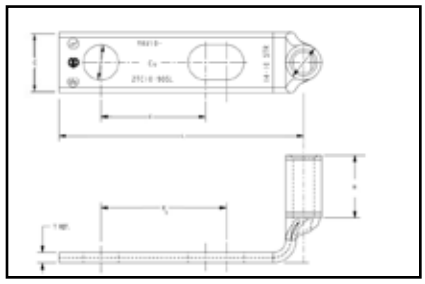

Catalog Number	Cond. Size	Stud Hole Size	Tongue Width	Dimensions					Installation Tooling (# of crimps)						Wire Strip Length
				B	T	L	E	E1	Dieless	Mech. MD6, OUR840, MD7-34R	Hydraulic PATMD6, Y500CTHS PAT60018V	Hydraulic Y35, Y39, Y750 Y46, PAT750	Color Code	Die Index	
YAZV2C2TC14FXSL	2 AWG	1/4"	0.60"	1.25"	0.11"	3.42"	0.75"	1.00"	Y1MRTC (4) MY29-3 (2) MY29-11 (2) MRC840 (2) Y644HSXT (1) Y81KFT (2) Y81KFTMBH (2) PAT644XT-18V (2	W2CVT (2) W2CRT (2)	W2CVT (2) W2CRT (2)	U2CRT (2)	Brown	10	1-5/16"
YAZV2C2TC14FXSLBOX500		1/4"	0.60"	1.25"	0.11"	3.42"	0.75"	1.00"							
YAZV2C2TC38FXSL		3/8'	0.60"	1.25"	0.11"	3.42"	0.75"	1.00"							
YAZV2C2TC38FXSLBOX500		3/8"	0.60"	1.25"	0.11"	3.42"	0.75"	1.00"							
YAZV252TC14FXSL	1/0 AWG	1/4"	0.83"	1.50"	0.12"	3.44"	0.63"	1.00"		W25VT (4) W25RT (4) X25RT (4)	W25VT (4) W25RT (4) X25RT (4)	U25RT (2)	Pink	12	1-9/16"
YAZV252TC14FXSLBOX500		1/4"	0.83"	1.50"	0.12"	3.44"	0.63"	1.00"							
YAZV252TC38FXSL		3/8"	0.83"	1.50"	0.12"	3.44"	0.63"	1.00"							
YAZV252TC38FXSLBOX500		3/8"	0.83"	1.50"	0.12"	3.44"	0.63"	1.00"							
YAZV262TC14FXSL	2/0 AWG	1/4"	0.93"	1.50"	0.13"	3.58"	0.63"	1.00"		W26VT (4) W26RT (4) X26RT (4)	W26VT (4) W26RT (4) X26RT (4)	U26RT (2)	Black	13	1-9/16"
YAZV262TC14FXSLBOX500		1/4"	0.93"	1.50"	0.13"	3.58"	0.63"	1.00"							
YAZV262TC38FXSL		3/8"	0.93"	1.50"	0.13"	3.58"	0.63"	1.00"							
YAZV262TC38FXSLBOX500		3/8"	0.93"	1.50"	0.13"	3.58"	0.63"	1.00"							
YAZV282TC14FXSL	4/0 AWG	1/4"	1.14"	1.62"	0.15"	3.64"	0.63"	1.00"	MY29-3 (2) MY29-11 (2) MRC840 (4) Y644HSXT (1) Y81KFT (2) Y81KFTMBH (2) PAT644XT-18V (2)	W28VT (4) W28RT (4) X28RT (6)	W28VT (4) W28RT (4) X28RT (6)	U28RT (2)	Purple	15	1-11/16"
YAZV282TC14FXSLBOX500		1/4"	1.14"	1.62"	0.15"	3.64"	0.63"	1.00"							
YAZV282TC38FXSL		3/8"	1.14"	1.62"	0.15"	3.64"	0.63"	1.00"							
YAZV282TC38FXSLBOX500		3/8"	1.14"	1.62"	0.15"	3.64"	0.63"	1.00"							

Note: All dimensions shown are for reference only.

Blue highlighted items are industry standard and most frequently ordered.

HYLUG™ SPLIT TONGUE STANDARD BARREL TERMINALS

TYPES YA-4TC, YAV-4TC-FX

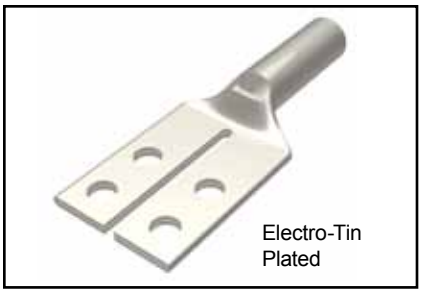

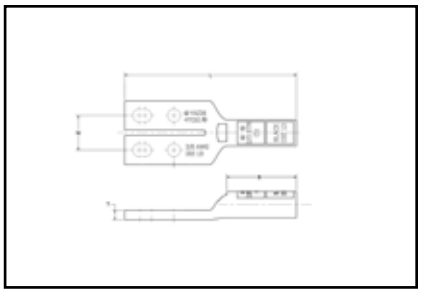

UL Listed 90° C,
600 Volts to 35 kV♦

Catalog Number	Wire Size	Stud Hole Size	Stud Hole Spacing	Tongue Width	Figure Dimensions (B)	(T)	(L)	(W)	Installation Tooling (# of crimps): Dieless	Mechanical: MD6, OUR840, MD7-34R	Hydraulic: BCT500HS, Y500CTHS	Hydraulic: Y35, Y39, Y750 Y46, PAT750	Die Index	Color Code	Wire Strip Length
YA25L4TCG1	1/0 AWG	1/4"	0.62"	1.38"	0.88"	0.21"	3.05"	0.75"	MY29-3 (1) MY29-11 (1) Y644HSXT-18V (1) PAT644XT-18V (1)	W25VT(2) W25RT(2) X25RT(2)	W25VT(2) W25RT(2) X25RT(2)	U25RT(1) U2CABT(1)	12 or 348	Pink	15/16"
YA26L4TCG1	2/0 AWG	1/4"	0.62"	1.38"	0.94"	0.21"	3.15"	0.75"		W26VT(2) W26RT(2) X26RT(2)	W26VT(2) W26RT(2) X26RT(2)	U26RT(1) U26D-1(1)	13	Black	1"
YA27L4TCG1	3/0 AWG	1/4"	0.62"	1.38"	1.00"	0.21"	3.25"	0.75"		W27VT(2) W27RT(2) X27RT(2)	W27VT(2) W27RT(2) X27RT(2)	U27RT(1) U27D-1(1)	14	Orange	1-1/16"
YA28L4TCG1	4/0 AWG	1/4"	0.62"	1.38"	1.00"	0.21"	3.29"	0.75"		W28VT(2) W28RT(2) X28RT(2)	W28VT(2) W28RT(2) X28RT(2)	U28RT(1) U28D-1(1)	15	Purple	1-1/8"
YA29L4TCG1	250 kcmil	1/4"	0.62"	1.38"	1.06"	0.21"	3.39"	0.75"		W29VT(2) W29RT(2) X29RT(2)	W29VT(2) W29RT(2) X29RT(2)	U29RT(1) U29D-1(1)	16	Yellow	1-1/8"
YA31L4TCG1	350 kcmil	1/4"	0.62"	1.38"	1.06"	0.21"	3.46"	0.75"		W31RT(2) W31VT(2)	W31RT(2) W31VT(2)	U31RT(2) U29ART(2)	18 or 324	Red	1-1/8"
FLEX CONDUCTORS															
YAV2CL4TC14FXG1	125/2 #2 Weld 2 AWG	1/4"	0.62"	1.38"	0.62"	0.11"	2.84"	0.75"	MY29-3 (1) MY29-11 (1) Y644HSXT-18V (1) PAT644XT-18V (1)	W2CVT(1) W2CRT(1) X2CRT(1)	W2CVT(1) W2CRT(1) X2CRT(1)	U2CRT(1)	10	Brown	11/16"
YAV25L4TC14FXG1	275/24 1/0 Weld 1/0 AWG	1/4"	0.62"	1.38"	0.69"	0.21"	2.90"	0.75"		W25VT(1) W25RT(1) X25RT(1)	W25VT(1) W25RT(1) X25RT(1)	U25RT(1) U2CABT(1)	12 or 348	Pink	13/16"
YAV26L4TC14FXG1	325/24 2/0 Weld 2/0 AWG	1/4"	0.62"	1.38"	0.81"	0.21"	3.07"	0.75"		W26VT(1) W26RT(1) X26RT(1)	W26VT(1) W26RT(1) X26RT(1)	U26RT(1) U26D-1(1)	13	Black	1-1/16"
YAV27L4TC14FXG1	450/24 3/0 Weld 3/0 AWG	1/4"	0.62"	1.38"	1.00"	0.21"	3.30"	0.75"		W27RT(2) X27RT(3)	W27RT(2) X27RT(3)	U27RT(1) U27D-1(1)	14	Orange	1-1/16"
YAV28L4TC14FXG1	550/24 4/0 Weld 4/0 AWG	1/4"	0.62"	1.38"	1.00"	0.21"	3.38"	0.75"		W28VT(2) W28RT(2) X28RT(3)	W28VT(2) W28RT(2) X28RT(3)	U29RT(1) U29D-1(1)	15	Purple	11/16"

Blue highlighted items are industry standard and most frequently ordered.

HYLUG™ SPLIT TONGUE LONG BARREL TERMINALS WITH INSPECTION WINDOW

TYPE YAZ-4TC

UL Listed 90° C,
600 Volts to 35 kV♦

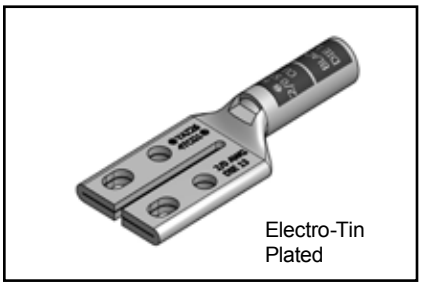

Electro-Tin Plated

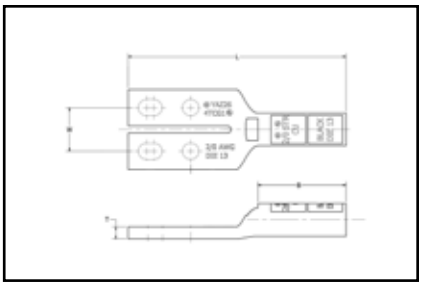

Catalog Number	Wire Size	Stud Hole Size	Stud Hole Spacing	Tongue Width	Figure Dimensions (B)	(T)	(L)	(W)	Installation Tooling (# of crimps): Dieless	Mechanical: MD6, OUR840, MD7-34R	Hydraulic: BCT500HS, Y500CTHS	Hydraulic: Y35, Y39, Y750 Y46, PAT750	Die Index	Color Code	Wire Strip Length
YAZ254TCG1	1/0 AWG	1/4"	0.62"-0.75"	1.38"	1.38"	0.11"	3.55"	0.75"	MY29-3 (1) MY29-11 (1) Y644HSXT-18V (1) PAT644XT-18V (1)	W25VT(1) W25RT(1) X25RT(1)	W25VT(1) W25RT(1) X25RT(1)	U25RT (2) U2CABT (2)	12 or 348	Pink	1-7/16"
YAZ254TC38E1G1		3/8"	1.00"-1.13"	1.63"	1.38"	0.11"	3.93"	0.88"							
YAZ264TCG1	2/0 AWG	1/4"	0.62"-0.75"	1.38"	1.50"	0.21"	3.71"	0.75"		W26VT(2) W26RT(2) X26RT(2)	W26VT(2) W26RT(2) X26RT(2)	U26RT (2) U26D-1 (2)	13	Black	1-9/16"
YAZ264TC38E1G1		3/8"	1.00"-1.13"	1.63"	1.50"	0.21"	4.09"	0.88"							
YAZ284TCG1	4/0 AWG	1/4"	0.62"-0.75"	1.38"	1.62"	0.21"	3.91"	0.75"		W28VT(2) W28RT(2) X28RT(3)	W28VT(2) W28RT(2) X28RT(3)	U28RT(1)	15	Purple	1-11/16"
YAZ294TCG1	250 kcmil	1/4"	0.62"-0.75"	1.38"	1.62"	0.21"	3.94"	0.75"		W29VT(2) W29RT(2) X29RT(3)	W29VT(2) W29RT(2) X29RT(3)	U29RT (2) U29D-1 (2)	16	Yellow	1-11/16"
YAZ314TCG1	350 kcmil	1/4"	0.62"-0.75"	1.38"	2.00"	0.21"	4.39"	0.75"		W31VT(2) W31RT(2)	W31VT(2) W31RT(2)	U31RT (2) U29ART (2) U31D-1 (2)	18 or 324	Red	2-1/16"

Blue highlighted items are industry standard and most frequently ordered.

ONE HOLE HYLUG™ CODE CONDUCTOR STANDARD BARREL

TYPE YAV-M

Made from electrolytic copper tube and is electro tin plate. Wire range is from 2.5 mm² to 630 mm² for class 2. Compatible to **IEC61238-1**.

Electro-Tin Plated

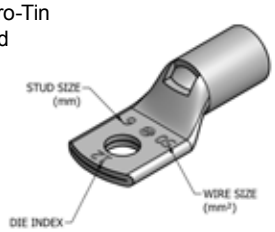

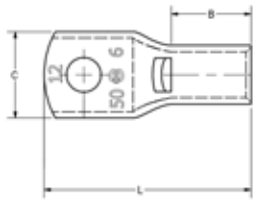

Catalog Number	Wire Range (MM²)	Stud Size	Dimensions (mm)				Installation Tooling					Wire Strip Length
								Mechanical		Hydraulic		
			Tongue Thickness	(B)	(C)	(L)	Dieless*	MD6, OUR840, MD7-34R	BCT500HS, Y500CTHS	Y35, Y39, Y750, PAT750, Y46**, PAT46**	Die Index	
YAV025M3	2.5	M3	1.0	6.9	7.9	19.1	Y10D (1) Y10-22 (1) MR8G98 (1) MR8-9Q (1) Y8MRB-1 (1) MR20 (1)	—	—	—	—	7
YAV025M4		M4	1.0	6.9	7.9	19.1						
YAV025M5		M5	1.0	6.9	7.9	19.1						
YAV025M6		M6	0.8	6.9	10.7	24.2						
YAV025M8		M8	0.8	6.9	11.2	24.2						
YAV06M4	6	M4	1.5	10.4	9.7	23.9		—	—	—	—	11
YAV06M5		M5	1.5	10.4	9.7	23.9						
YAV06M6		M6	1.3	10.4	11.9	26.9						
YAV06M8		M8	1.0	10.4	13.5	28.7						
YAV06M10		M10	1.0	11.9	14.2	29.1						
YAV10M4	10	M4	2.0	11.2	10.4	29.1	Y1MRTC (1) MY29-11 (1) MRC840 (1) Y81KFT (1) PAT81KFT-18V (1)	W8CVT (1) W8CRT (1) X8CRT (1)	W8CVT (1) W8CRT (1) X8CRT (1)	U8CRT (1)	49	11
YAV10M5		M5	1.8	11.2	10.4	28.5						
YAV10M6		M6	1.8	11.2	11.7	31.0						
YAV10M8		M8	1.5	11.2	13.2	33.0						
YAV10M10		M10	1.3	11.2	14.5	33.0						
YAV10M12		M12	1.3	11.2	18.5	38.6						
YAV16M4	16	M4	2.0	12.7	12.2	31.5	Y1MRTC (1) MY29-11 (1) MRC840 (1) Y644HSXT (1) PAT644XT18V (1) Y81KFT (1) PAT81KFT-18V (1)	W5CVT (1) W5CRT (1) X5CRT (1)	W5CVT (1) W5CRT (1) X5CRT (1)	U5CRT (1)	7	13
YAV16M5		M5	2.0	12.7	12.2	33.0						
YAV16M6		M6	2.0	12.7	12.2	33.0						
YAV16M8		M8	1.5	12.7	15.2	36.3						
YAV16M10		M10	1.5	12.7	14.7	40.9						
YAV16M12		M12	1.3	12.7	18.8	41.6						
YAV25M5	25	M5	2.3	12.7	14.0	33.5	Y1MRTC (2) MY29-11 (1) MRC840 (1) Y644HSXT (1) PAT644XT18V (1) Y81KFT (1) PAT81KFT-18V (1)	W3CRT (1)	W3CRT (1)	U3CRT (1)	9	13
YAV25M6		M6	2.0	12.7	12.7	34.5						
YAV25M8		M8	2.0	12.7	16.0	37.6						
YAV25M10		M10	2.0	12.7	14.7	41.4						
YAV25M12		M12	1.5	12.7	18.5	42.7						
YAV35M5	35	M5	2.5	16.0	17.3	38.1		W2CVT (1) W2CRT (1) X2CRT (1)	W2CVT (1) W2CRT (1) X2CRT (1)	U2CRT (1)	10	17
YAV35M6		M6	2.5	16.0	17.5	43.7						
YAV35M8		M8	2.5	16.0	17.5	43.7						
YAV35M10		M10	2.5	16.0	17.3	45.9						
YAV35M12		M12	2.3	16.0	19.6	47.5						

* Use equivalent AWG setting on tool for installation

** PUADP-1 Adaptor is required to use "U" Dies in Y46 and PAT46 series tools

† P-RT Die sets for use in Y46 only, PUADP-1 Adaptor not required

Blue highlighted items are industry standard and most frequently ordered.

ONE HOLE HYLUG™ CODE CONDUCTOR STANDARD BARREL

TYPE YAV-M
(Continued)

Electro-Tin Plated

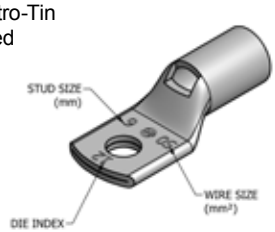

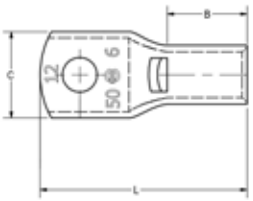

Catalog Number	Wire Range (MM²)	Stud Size	Dimensions (mm)				Installation Tooling					Wire Strip Length
								Mechanical		Hydraulic		
			Tongue Thickness	(B)	(C)	(L)	Dieless*	MD6, OUR840, MD7-34R	BCT500HS, Y500CTHS	Y35, Y39, Y750, PAT750, Y46**, PAT46**	Die Index	
YAV50M6	50	M6	2.5	16.0	17.3	38.1	MY29-11 (1) MRC840 (2) Y644HSXT (1) PAT644XT18V (1) Y81KFT (1) PAT81KFT-18V (1)	W25VT (2) W25RT (2) X25RT (2)	W25VT (2) W25RT (2) X25RT (2)	U25RT (1)	12	17
YAV50M8		M8	2.5	16.0	17.3	42.9						
YAV50M10		M10	2.5	16.0	17.3	45.9						
YAV50M12		M12	2.5	16.0	18.5	52.3						
YAV50M14		M14	3.0	16.0	21.1	53.3						
YAV50M16		M16	3.6	16.0	25.9	58.7						
YAV70M5	70	M5	3.0	17.5	21.1	41.4		W25VT (2) W25RT (2) X25RT (2)	W25VT (2) W25RT (2) X25RT (2)	U26RT (1)	13	19
YAV70M6		M6	3.0	17.5	21.1	44.5						
YAV70M8		M8	3.0	17.5	21.1	46.0						
YAV70M10		M10	3.0	17.5	21.1	49.3						
YAV70M12		M12	3.0	17.5	21.1	55.6						
YAV70M14		M14	2.8	17.5	22.4	56.6						
YAV70M16		M16	2.8	17.5	22.4	62.0						
YAV95M8	95	M8	3.3	20.6	23.6	50.3	MY29-11 (1) MRC840 (2) Y644HSXT (1) PAT644XT18V (1) Y81KFT (2) PAT81KFT-18V (2)	W27VT (2) W27RT (2) X27RT (3)	W27VT (2) W27RT (2) X27RT (3)	U27RT (1)	14	22
YAV95M10		M10	3.3	20.6	23.6	53.6						
YAV95M12		M12	3.3	20.6	23.6	59.9						
YAV95M14		M14	3.3	20.6	23.6	61.0						
YAV95M16		M16	3.3	20.6	23.6	66.3						
YAV95M20		M20	4.1	20.6	30.5	77.4						
YAV120M8	120	M8	3.8	26.2	29.0	58.2		W28VT (2) W28RT (2) X28RT (3)	W28VT (2) W28RT (2) X28RT (3)	U28RT (1)	15	27
YAV120M10		M10	3.8	26.2	29.0	61.5						
YAV120M12		M12	3.8	26.2	29.0	67.8						
YAV120M14		M14	3.8	26.2	29.0	68.8						
YAV120M16		M16	3.8	26.2	29.0	74.2						
YAV120M20		M20	3.8	26.2	29.0	85.2						
YAV150M8	150	M8	4.1	26.2	30.5	58.7	Y644HSXT (1) PAT644XT18V (1) Y81KFT (2) PAT81KFT-18V (2)	W30VT (2)	W30VT (2) W30RT (2)	U30RT (2)	17	27
YAV150M10		M10	4.1	26.2	30.5	62.0						
YAV150M12		M12	4.1	26.2	30.5	68.3						
YAV150M14		M14	4.1	26.2	30.5	69.2						
YAV150M16		M16	4.1	26.2	30.5	74.7						
YAV150M20		M20	4.1	26.2	30.5	85.7						

* Use equivalent AWG setting on tool for installation

** PUADP-1 Adaptor is required to use "U" Dies in Y46 and PAT46 series tools

† P-RT Die sets for use in Y46 only, PUADP-1 Adaptor not required

Blue highlighted items are industry standard and most frequently ordered.

ONE HOLE HYLUG™ CODE CONDUCTOR STANDARD BARREL

TYPE YAV-M (Continued)

Electro-Tin Plated

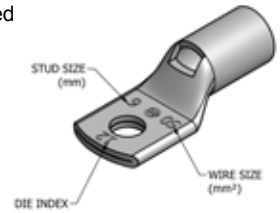

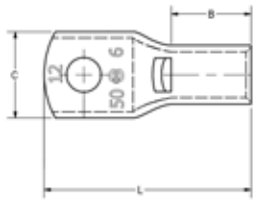

Catalog Number	Wire Range (MM²)	Stud Size	Dimensions (mm)				Installation Tooling					Wire Strip Length
								Mechanical		Hydraulic		
			Tongue Thickness	(B)	(C)	(L)	Dieless*	MD6, OUR840, MD7-34R	BCT500HS, Y500CTHS	Y35, Y39, Y750, PAT750, Y46**, PAT46**	Die Index	
YAV185M8	185	M8	4.6	26.9	32.8	60.2	Y644HSXT (1) PAT644XT18V (1) Y81KFT (2) PAT81KFT-18V (2)	W31VT (2)	W31VT (2) W31RT (2)	U31RT (2)	18	29
YAV185M10		M10	4.3	26.9	32.8	63.5						
YAV185M12		M12	4.3	26.9	32.8	69.9						
YAV185M14		M14	4.6	26.9	32.8	70.8						
YAV185M16		M16	4.6	26.9	32.8	76.2						
YAV185M20		M20	4.6	26.9	32.8	87.3						
YAV240M10	240	M10	5.8	32.3	39.4	72.9		W34VT (2)	W34VT (2) W34RT (2)	U34RT (2)	20	33
YAV240M12		M12	5.6	32.3	39.4	80.2						
YAV240M14		M14	5.8	32.3	39.4	81.3						
YAV240M16		M16	5.8	32.3	39.4	85.6						
YAV240M20		M20	5.8	32.3	39.4	96.6						
YAV300M10	300	M10	6.9	35.1	44.2	77.2		—	—	U36RT (2)	22	35
YAV300M12		M12	6.6	35.1	44.2	83.6						
YAV300M14		M14	6.9	35.1	44.2	84.6						
YAV300M16		M16	6.9	35.1	44.2	89.9						
YAV300M20		M20	6.9	35.1	44.2	100.9						
YAV400M12	400	M12	7.6	36.1	50.3	87.1	Y644HSXT (1) PAT644XT18V (1) Y81KFT (3) PAT81KFT-18V (3)	—	—	U39RT (3)	24	37
YAV400M14		M14	7.6	36.1	50.3	88.1						
YAV400M16		M16	7.6	36.1	50.3	93.5						
YAV400M20		M20	7.6	36.1	50.3	104.5						
YAV500M12	500	M12	8.1	41.9	55.6	96.2		—	—	U44XRT (3)	L115	43
YAV500M16		M16	8.4	41.9	55.6	102.6						
YAV500M20		M20	8.4	41.9	55.6	113.7						
YAV630M12	630	M12	9.7	50.8	62.5	107.7	—	—	—	† P45RT (3)	29	55
YAV630M16		M16	9.7	50.8	62.5	114.0						
YAV630M20		M20	9.7	50.8	62.5	125.2						

* Use equivalent AWG setting on tool for installation

** PUADP-1 Adaptor is required to use "U" Dies in Y46 and PAT46 series tools

† P-RT Die sets for use in Y46 only, PUADP-1 Adaptor not required

Blue highlighted items are industry standard and most frequently ordered.

ONE HOLE HYLUG™ CODE CONDUCTOR LONG BARREL

TYPE YALB-M

Made from electrolytic copper tube and is electro tin plate. Wire range is from 10 mm² to 630 mm² for class 2. Compatible to **IEC61238-1.**

Electro-Tin Plated

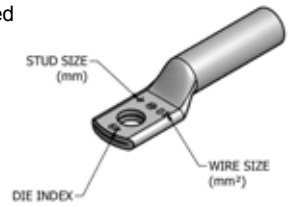

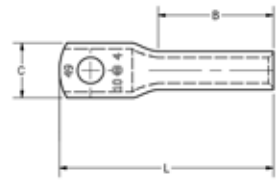

Catalog Number	Wire Range (MM²)	Stud Size	Dimensions (mm) Tongue Thickness	(B)	(C)	(L)	Installation Tooling: Dieless*	Mechanical: MD6, OUR840, MD7-34R	Mechanical: BCT500HS, Y500CTHS	Hydraulic: Y35, Y39, Y750, PAT750, Y46**, PAT46**	Die Index	Wire Strip Length
YALB10M4	10	M4	2.3	20.6	9.7	38.1	Y1MRTC (2) MY29-11 (1) MRC840 (2) Y81KFT (1) PAT81KFT-18V (1)	W8CVT (2) W8CRT (2) X8CRT (2)	W8CVT (2) W8CRT (2) X8CRT (2)	U8CRT (2)	49	22
YALB10M5		M5	2.0	20.6	10.4	39.8						
YALB10M6		M6	2.0	20.6	11.2	42.9						
YALB10M8		M8	1.5	20.6	13.2	44.5						
YALB10M10		M10	1.4	20.6	14.7	47.7						
YALB10M12		M12	3.0	20.6	21.1	58.8						
YALB16M4	16	M4	2.0	28.4	11.4	47.2	Y1MRTC (2) MY29-11 (2) MRC840 (2) Y644HSXT (1) PAT644XT18V (1) Y81KFT (1) PAT81KFT-18V (1)	W5CVT (2) W5CRT (2) X5CRT (2)	W5CVT (2) W5CRT (2) X5CRT (2)	U5CRT (2)	7	30
YALB16M5		M5	2.0	28.4	11.4	48.8						
YALB16M6		M6	2.0	28.4	12.2	51.8						
YALB16M8		M8	1.8	28.4	13.2	53.6						
YALB16M10		M10	1.5	28.4	14.7	59.2						
YALB16M12		M12	3.0	28.4	19.1	63.0						
YALB25M5	25	M5	2.3	31.8	14.0	53.6		W3CRT (2)	W3CRT (2)	U3CRT (2)	9	33
YALB25M6		M6	2.3	31.8	14.0	56.6						
YALB25M8		M8	2.3	31.8	14.0	58.4						
YALB25M10		M10	2.0	31.8	14.7	61.5						
YALB25M12		M12	3.0	31.8	21.1	67.8						
YALB35M5	35	M5	2.5	35.1	17.3	57.7	Y1MRTC (4) MY29-11 (2) MRC840 (2) Y644HSXT (1) PAT644XT18V (1) Y81KFT (1) PAT81KFT-18V (1)	W2CVT (2) W2CRT (2) X2CRT (2)	W2CVT (2) W2CRT (2) X2CRT (2)	U2CRT (2)	10	37
YALB35M6		M6	2.5	35.1	17.3	60.7						
YALB35M8		M8	2.5	35.1	17.3	62.2						
YALB35M10		M10	2.5	35.1	17.3	65.5						
YALB35M12		M12	3.0	35.1	21.1	71.9						
YALB50M6	50	M6	2.5	35.1	17.3	60.7	MY29-11 (2) MRC840 (4) Y644HSXT (1) PAT644XT18V (1) Y81KFT (2) PAT81KFT-18V (2)	W25VT (4) W25RT (4) X25RT (4)	W25VT (4) W25RT (4) X25RT (4)	U25RT (2)	12	37
YALB50M8		M8	2.5	35.1	17.3	62.2						
YALB50M10		M10	2.5	35.1	17.3	65.5						
YALB50M12		M12	3.0	35.1	21.1	71.9						
YALB50M14		M14	3.0	35.1	21.1	72.9						
YALB50M16		M16	3.0	35.1	21.1	78.2						

* Use equivalent AWG setting on tool for installation

** PUADP-1 Adaptor is required to use "U" Dies in Y46 and PAT46 series tools

† P-RT Die sets for use in Y46 only, PUADP-1 Adaptor not required

Blue highlighted items are industry standard and most frequently ordered.

ONE HOLE HYLUG™ CODE CONDUCTOR LONG BARREL

TYPE YALB-M
(Continued)

Electro-Tin Plated

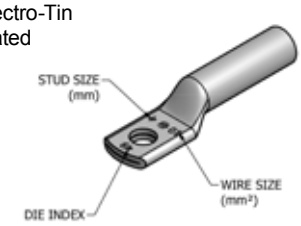

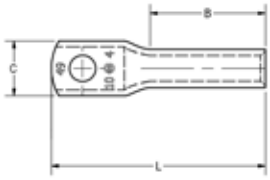

Catalog Number	Wire Range (MM²)	Stud Size	Dimensions (mm) Tongue Thickness	(B)	(C)	(L)	Installation Tooling Dieless*	Mechanical MD6, OUR840, MD7-34R	Mechanical BCT500HS, Y500CTHS	Hydraulic Y35, Y39, Y750, PAT750, Y46**, PAT46**	Die Index	Wire Strip Length
YALB70M6	70	M6	3.0	38.1	21.1	65.5	MY29-11 (2) MRC840 (4) Y644HSXT (1) PAT644XT18V (1) Y81KFT (2) PAT81KFT-18V (2)	W26VT (4) W26RT (4) X26RT (4)	W26VT (4) W26RT (4) X26RT (4)	U26RT (2)	13	40
YALB70M8		M8	3.0	38.1	21.1	67.3						
YALB70M10		M10	3.0	38.1	21.1	70.4						
YALB70M12		M12	3.0	38.1	21.1	76.7						
YALB70M14		M14	3.0	38.1	21.1	77.7						
YALB70M16		M16	3.0	38.1	21.1	86.4						
YALB95M8	95	M8	3.3	38.1	23.6	68.6	MY29-11 (2) MRC840 (4) Y644HSXT (1) PAT644XT18V (1) Y81KFT (2) PAT81KFT-18V (2)	W27VT (4) W27RT (4) X27RT (6)	W27VT (4) W27RT (4) X27RT (6)	U27RT (2)	14	40
YALB95M10		M10	3.3	38.1	23.6	71.6						
YALB95M12		M12	3.3	38.1	23.6	78.0						
YALB95M14		M14	3.3	38.1	23.6	79.0						
YALB95M16		M16	3.3	38.1	23.6	84.3						
YALB95M20		M20	4.1	38.1	30.5	95.5						
YALB120M8	120	M8	3.6	41.1	29.0	73.9		W28VT (4) W28RT (4) X28RT (6)	W28VT (4) W28RT (4) X28RT (6)	U28RT (2)	15	43
YALB120M10		M10	3.6	41.1	29.0	79.6						
YALB120M12		M12	3.6	41.1	29.0	83.6						
YALB120M14		M14	3.6	41.1	29.0	84.6						
YALB120M16		M16	3.6	41.1	29.0	89.9						
YALB120M20		M20	4.3	41.1	30.5	101.1						
YALB150M8	150	M8	4.1	50.8	30.5	84.1	Y644HSXT (1) PAT644XT18V (1) Y81KFT (3) PAT81KFT-18V (3)	W30VT (4)	W30VT (4) W30RT (4)	U30RT (4)	17	52
YALB150M10		M10	4.1	50.8	30.5	87.4						
YALB150M12		M12	4.1	50.8	30.5	93.7						
YALB150M14		M14	4.1	50.8	30.5	94.7						
YALB150M16		M16	4.1	50.8	30.5	100.1						
YALB150M20		M20	4.1	50.8	30.5	111.3						
YALB185M8	185	M8	4.3	50.8	32.8	85.1		W31VT (4)	W31VT (4) W31RT (4)	U31RT (4)	18	52
YALB185M10		M10	4.3	50.8	32.8	88.4						
YALB185M12		M12	4.3	50.8	32.8	94.7						
YALB185M14		M14	4.3	50.8	32.8	95.3						
YALB185M16		M16	4.3	50.8	32.8	101.1						
YALB185M20		M20	4.3	50.8	32.8	112.3						

* Use equivalent AWG setting on tool for installation

** PUADP-1 Adaptor is required to use "U" Dies in Y46 and PAT46 series tools

† P-RT Die sets for use in Y46 only, PUADP-1 Adaptor not required

Blue highlighted items are industry standard and most frequently ordered.

ONE HOLE HYLUG™ CODE CONDUCTOR LONG BARREL

TYPE YALB-M
(Continued)

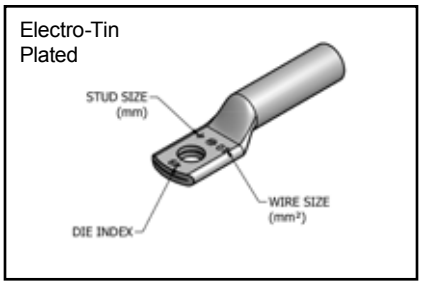

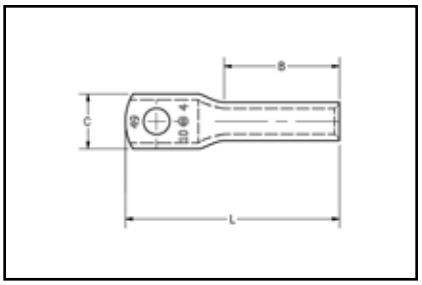

Catalog Number	Wire Range (MM²)	Stud Size	Dimensions (mm)				Installation Tooling					Wire Strip Length
								Mechanical		Hydraulic		
			Tongue Thickness	(B)	(C)	(L)	Dieless*	MD6, OUR840, MD7-34R	BCT500HS, Y500CTHS	Y35, Y39, Y750, PAT750, Y46**, PAT46**	Die Index	
YALB240M10	240	M10	5.6	57.2	39.4	98.0	Y644HSXT (1) PAT644XT18V (1) Y81KFT (4) PAT81KFT-18V (4)	W34VT (4)	W34VT (4)	U34RT (4)	20	59
YALB240M12		M12	5.6	57.2	39.4	105.2						
YALB240M14		M14	5.6	57.2	39.4	106.2						
YALB240M16		M16	5.6	57.2	39.4	111.3						
YALB240M20		M20	5.6	57.2	39.4	122.4						
YALB300M10	300	M10	6.6	68.3	44.2	111.8	Y644HSXT (1) PAT644XT18V (1) Y81KFT (4) PAT81KFT-18V (4)	—	—	U36RT (4)	22	70
YALB300M12		M12	6.6	68.3	44.2	118.1						
YALB300M14		M14	6.6	68.3	44.2	119.1						
YALB300M16		M16	6.6	68.3	44.2	124.5						
YALB300M20		M20	6.6	68.3	44.2	135.4						
YALB400M12	400	M12	7.6	74.7	50.2	127.0				U39RT (4)	24	76
YALB400M14		M14	7.6	74.7	50.2	128.0						
YALB400M16		M16	7.6	74.7	50.2	133.4						
YALB400M20		M20	7.6	74.7	50.2	144.3						
YALB500M12	500	M12	8.1	76.2	55.7	132.1				U44XRT (4)	L115	78
YALB500M16		M16	8.1	76.2	55.7	138.4						
YALB500M20		M20	8.1	76.2	55.7	149.4						
YALB630M12	630	M12	9.7	81.0	62.5	139.4	—			† P45RT (6)	29	83
YALB630M16		M16	9.7	81.0	62.5	145.8						
YALB630M20		M20	9.7	81.0	62.5	157.0						

* Use equivalent AWG setting on tool for installation

** PUADP-1 Adaptor is required to use "U" Dies in Y46 and PAT46 series tools

† P-RT Die sets for use in Y46 only, PUADP-1 Adaptor not required

Blue highlighted items are industry standard and most frequently ordered.

TWO HOLE HYLUG™ CODE CONDUCTOR STANDARD BARREL

TYPE YAV-2M

Made from electrolytic copper tube and is electro tin plate. Wire range is from 2.5 mm² to 630 mm² for class 2. Compatible to **IEC61238-1**.

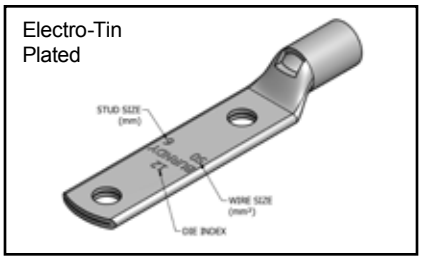

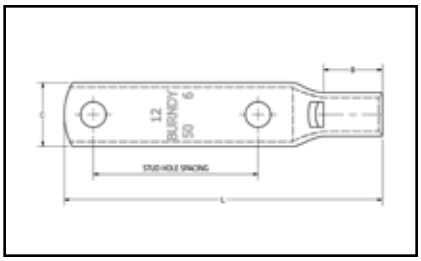

Catalog Number	Wire Range (MM²)	Stud Size	Stud Hole Spacing	Dimensions (mm)				Installtion Tooling					Wire Strip Length (mm)
									Mechanical		Hydraulic		
				Tongue Thickness	(B)	(C)	(L)	Dieless*	MD6, OUR840, MD7-34R	PAT600, Y500CTHS	Y35, Y39, Y750, PAT750, Y46**, PAT46**	Die Index	
YAV0252M3	2.5	M3	25.4	1.0	6.7	7.9	44.7	Y10D (1) Y10-22 (1) MR8G98 (1) MR8-9Q (1) Y8MRB-1 (1) MR20 (1)	—	—	—	—	7
YAV0252M4		M4	25.4	1.0	6.7	7.9	44.7						
YAV0252M5		M5	25.4	1.0	6.7	7.9	44.7						
YAV0252M6		M6	25.4	0.8	6.7	10.7	49.8						
YAV0252M8		M8	25.4	0.8	6.7	11.0	49.8						
YAV062M4	6	M4	25.4	1.5	10.4	9.5	49.5						11
YAV062M5		M5	25.4	1.5	10.4	9.5	49.5						
YAV062M6		M6	25.4	1.3	10.4	11.9	52.6						
YAV062M8		M8	25.4	1.0	10.4	13.5	54.4						
YAV062M10		M10	25.4	1.0	11.9	14.2	54.6						
YAV102M4	10	M4	44.5	2.0	11.2	10.4	73.4	Y1MRTC (1) MY29-11 (1) MRC840 (1) Y81KFT (1) PAT81KFT-18V (1)	W8CVT (1) W8CRT (1) X8CRT (1)	W8CVT (1) W8CRT (1) X8CRT (1)	U8CRT (1)	49	11
YAV102M5		M5	44.5	1.8	11.2	10.4	74.9						
YAV102M6		M6	44.5	1.8	11.2	11.7	78.2						
YAV102M8		M8	44.5	1.5	11.2	13.2	79.8						
YAV102M10		M10	44.5	1.3	11.2	13.7	83.1						
YAV102M12		M12	44.5	1.3	11.2	18.5	89.4						
YAV162M4	16	M4	44.5	2.3	12.7	12.2	76.2	Y1MRTC (1) MY29-11 (1) MRC840 (1) Y644HSXT (1) PAT644XT18V (1) Y81KFT (1) PAT81KFT-18V (1)	W5CVT (1) W5CRT (1) X5CRT (1)	W5CVT (1) W5CRT (1) X5CRT (1)	U5CRT (1)	7	13
YAV162M5		M5	44.5	2.0	12.7	12.2	77.7						
YAV162M6		M6	44.5	2.0	12.7	12.2	80.8						
YAV162M8		M8	44.5	1.5	12.7	15.2	82.6						
YAV162M10		M10	44.5	1.5	12.7	14.7	85.6						
YAV162M12		M12	44.5	1.3	12.7	18.8	91.9						
YAV252M5	25	M5	44.5	2.2	12.7	14.0	78.2	Y1MRTC (2) MY29-11 (1) MRC840 (1) Y644HSXT (1) PAT644XT18V (1) Y81KFT (1) PAT81KFT-18V (1)	W3CRT (1)	W3CRT (1)	U3CRT (1)	9	13
YAV252M6		M6	44.5	2.0	12.7	12.7	81.3						
YAV252M8		M8	44.5	2.0	12.7	16.0	83.1						
YAV252M10		M10	44.5	2.0	12.7	14.7	86.1						
YAV252M12		M12	44.5	1.5	12.7	18.5	92.5						
YAV352M5	35	M5	44.5	2.5	16.0	17.3	82.8		W2CVT (1) W2CRT (1) X2CRT (1)	W2CVT (1) W2CRT (1) X2CRT (1)	U2CRT (1)	10	17
YAV352M6		M6	44.5	2.5	16.0	17.3	86.0						
YAV352M8		M8	44.5	2.5	16.0	17.3	87.6						
YAV352M10		M10	44.5	2.5	16.0	17.3	90.7						
YAV352M12		M12	44.5	2.3	16.0	17.3	97.0						
YAV502M6	50	M6	44.5	2.5	16.0	17.3	85.9	MY29-11 (1) MRC840 (2) Y644HSXT (1) PAT644XT18V (1) Y81KFT (1) PAT81KFT-18V (1)	W25VT (2) W25RT (2) X25RT (2)	W25VT (2) W25RT (2) X25RT (2)	U25RT (1)	12	17
YAV502M8		M8	44.5	2.5	16.0	17.3	87.6						
YAV502M10		M10	44.5	2.5	16.0	17.3	90.7						
YAV502M12		M12	44.5	2.5	16.0	18.5	97.0						
YAV502M14		M14	44.5	3.0	16.0	21.1	98.0						
YAV502M16		M16	44.5	3.6	16.0	25.9	104.9						

* Use equivalent AWG setting on tool for installation.

** PUADP-1 Adaptor is required to use "U" Dies in Y46 and PAT46 series tools.

† P-RT Die sets for use in Y46 only, PUADP-1 Adaptor not required.

Blue highlighted items are industry standard and most frequently ordered.

TWO HOLE HYLUG™ CODE CONDUCTOR STANDARD BARREL

TYPE YAV-2M
(Continued)

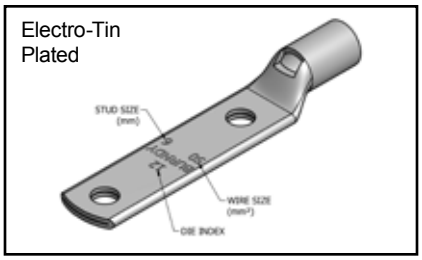

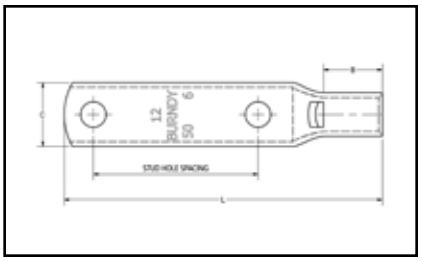

Catalog Number	Wire Range (MM²)	Stud Size	Stud Hole Spacing	Dimensions (mm)				Installtion Tooling					Wire Strip Length (mm)
									Mechanical		Hydraulic		
				Tongue Thickness	(B)	(C)	(L)	Dieless*	MD6, OUR840, MD7-34R	PAT600, Y500CTHS	Y35, Y39,Y750, PAT750,Y46**, PAT46**	Die Index	
YAV702M6	70	M6	44.5	3.0	17.5	21.1	89.2	MY29-11 (1) MRC840 (2) Y644HSXT (1) PAT644XT18V (1) Y81KFT (1) PAT81KFT-18V (1)	W26VT (2) W26RT (2) X26RT (2)	W26VT (2) W26RT (2) X26RT (2)	U26RT (1)	13	19
YAV702M8		M8	44.5	3.0	17.5	21.1	90.7						
YAV702M10		M10	44.5	3.0	17.5	21.1	94.0						
YAV702M12		M12	44.5	3.0	17.5	21.1	100.3						
YAV702M14		M14	44.5	2.8	17.5	22.4	101.3						
YAV702M16		M16	44.5	2.8	17.5	22.4	106.7						
YAV952M8	95	M8	44.5	3.3	20.6	23.6	95.0	MY29-11 (1) MRC840 (2) Y644HSXT (1) PAT644XT18V (1) Y81KFT (2) PAT81KFT-18V (2)	W27VT (2) W27RT (2) X27RT (3)	W27VT (2) W27RT (2) X27RT (3)	U27RT (1)	14	22
YAV952M10		M10	44.5	3.3	20.6	23.6	98.3						
YAV952M12		M12	44.5	3.3	20.6	23.6	104.6						
YAV952M14		M14	44.5	3.3	20.6	23.6	105.7						
YAV952M16		M16	44.5	3.3	20.6	23.6	111.0						
YAV952M20		M20	44.5	4.1	20.6	30.5	123.4						
YAV1202M8	120	M8	44.5	3.8	26.2	29.0	102.9		W28VT (2) W28RT (2) X28RT (3)	W28VT (2) W28RT (2) X28RT (3)	U28RT (1)	15	27
YAV1202M10		M10	44.5	3.8	26.2	29.0	106.2						
YAV1202M12		M12	44.5	3.8	26.2	29.0	112.5						
YAV1202M14		M14	44.5	3.8	26.2	29.0	113.5						
YAV1202M16		M16	44.5	3.8	26.2	29.0	118.9						
YAV1202M20		M20	44.5	3.8	26.2	29.0	130.8						
YAV1502M8	150	M8	44.5	4.1	26.2	30.5	103.4	Y644HSXT (1) PAT644XT18V (1) Y81KFT (2) PAT81KFT-18V (2)	W30VT (2)	W30VT (2) W30RT (2)	U30RT (2)	17	27
YAV1502M10		M10	44.5	4.1	26.2	30.5	106.7						
YAV1502M12		M12	44.5	4.1	26.2	30.5	113.0						
YAV1502M14		M14	44.5	4.1	26.2	30.5	114.8						
YAV1502M16		M16	44.5	4.1	26.2	30.5	119.4						
YAV1502M20		M20	44.5	4.1	26.2	30.5	131.3						
YAV1852M8	185	M8	44.5	4.6	26.9	32.8	104.9		W31VT (2)	W31VT (2) W31RT (2)	U31RT (2)	18	29
YAV1852M10		M10	44.5	4.3	26.9	32.8	108.2						
YAV1852M12		M12	44.5	4.6	26.9	32.8	114.6						
YAV1852M14		M14	44.5	4.6	26.9	32.8	116.6						
YAV1852M16		M16	44.5	4.6	26.9	32.8	120.9						
YAV1852M20		M20	44.5	4.6	26.9	32.8	133.1						
YAV2402M10	240	M10	44.5	5.8	32.3	39.4	117.6		W34VT (2)	W34VT (2) W34RT (2)	U34RT (2)	20	33
YAV2402M12		M12	44.5	5.6	32.3	39.4	125.0						
YAV2402M14		M14	44.5	5.8	32.3	39.4	126.0						
YAV2402M16		M16	44.5	5.8	32.3	39.4	130.3						
YAV2402M20		M20	44.5	5.8	32.3	39.4	142.5						

* Use equivalent AWG setting on tool for installation.

** PUADP-1 Adaptor is required to use "U" Dies in Y46 and PAT46 series tools.

† P-RT Die sets for use in Y46 only, PUADP-1 Adaptor not required.

Blue highlighted items are industry standard and most frequently ordered.

TWO HOLE HYLUG™ CODE CONDUCTOR STANDARD BARREL

TYPE YAV-2M

(Continued)

Electro-Tin Plated

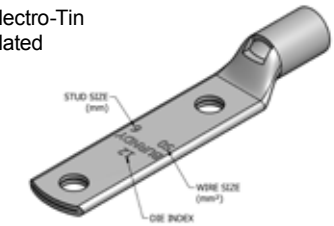

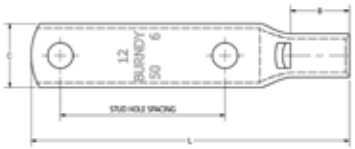

Catalog Number	Wire Range (MM²)	Stud Size	Stud Hole Spacing	Dimensions (mm)				Installtion Tooling					Wire Strip Length (mm)
									Mechanical		Hydraulic		
				Tongue Thickness	(B)	(C)	(L)	Dieless*	MD6, OUR840, MD7-34R	PAT600, Y500CTHS	Y35, Y39,Y750, PAT750,Y46**, PAT46**	Die Index	
YAV3002M10	300	M10	44.5	6.9	35.1	44.2	121.9	Y644HSXT (1) PAT644XT18V (1) Y81KFT (2) PAT81KFT-18V (2)	—	—	U36RT (2)	22	35
YAV3002M12		M12	44.5	6.6	35.1	44.2	128.3						
YAV3002M14		M14	44.5	6.9	35.1	44.2	129.3						
YAV3002M16		M16	44.5	6.9	35.1	44.2	134.6						
YAV3002M20		M20	44.5	6.9	35.1	44.2	145.5						
YAV4002M12	400	M12	44.5	7.6	36.1	50.3	131.8				U39RT (3)	24	37
YAV4002M14		M14	44.5	7.6	36.1	50.3	134.1						
YAV4002M16		M16	44.5	7.6	36.1	50.3	138.2						
YAV4002M20		M20	44.5	7.6	36.1	50.3	150.6						
YAV5002M12	500	M12	44.5	8.1	41.9	55.6	139.4				U44XRT (3)	L115	43
YAV5002M16		M16	44.5	8.1	41.9	55.6	147.3						
YAV5002M20		M20	44.5	8.1	41.9	55.6	160.0						
YAV6302M12	630	M12	44.5	9.7	50.8	62.5	152.4	—			† P45RT (3)	29	55
YAV6302M16		M16	44.5	9.7	50.8	62.5	158.8						
YAV6302M20		M20	44.5	9.7	50.8	62.5	169.9						

* Use equivalent AWG setting on tool for installation.

** PUADP-1 Adaptor is required to use "U" Dies in Y46 and PAT46 series tools.

† P-RT Die sets for use in Y46 only, PUADP-1 Adaptor not required.

TWO HOLE HYLUG™ CODE CONDUCTOR LONG BARREL

TYPE YALB-2M

Made from electrolytic copper tube and is electro tin plate. Wire range is from 10 mm² to 630 mm² for class 2. Compatible to **IEC61238-1.**

Electro-Tin Plated

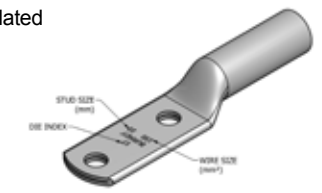

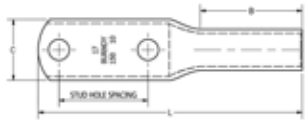

Catalog Number	Wire Range (MM²)	Stud Size	Stud Hole Spacing	Dimensions (mm)				Installtion Tooling					Wire Strip Length (mm)
									Mechanical		Hydraulic		
				Tongue Thickness	(B)	(C)	(L)	Dieless*	MD6, OUR840, MD7-34R	PAT600, Y500CTHS	Y35, Y39, Y750,PAT750, Y46**, PAT46**	Die Index	
YALB102M4	10	M4	44.5	2.3	20.6	9.9	82.6	Y1MRTC (2) MY29-11 (1) MRC840 (2) Y81KFT (1) PAT81KFT-18V (1)	W8CVT (2) W8CRT (2) X8CRT (2)	W8CVT (2) W8CRT (2) X8CRT (2)	U8CRT (2)	49	22
YALB102M5		M5	44.5	2.0	20.6	10.4	84.3						
YALB102M6		M6	44.5	2.0	20.6	11.2	87.4						
YALB102M8		M8	44.5	1.5	20.6	13.2	88.9						
YALB102M10		M10	44.5	1.5	20.6	14.7	92.2						
YALB102M12		M12	44.5	3.0	20.6	21.1	103.4						
YALB162M4	16	M4	44.5	2.3	28.4	11.4	91.7	Y1MRTC (2) MY29-11 (2) MRC840 (2) Y644HSXT (1) PAT644XT18V (1) Y81KFT (1) PAT81KFT-18V (1)	W5CVT (2) W5CRT (2) X5CRT (2)	W5CVT (2) W5CRT (2) X5CRT (2)	U5CRT (2)	7	30
YALB162M5		M5	44.5	2.3	28.4	11.4	93.2						
YALB162M6		M6	44.5	2.0	28.4	12.2	96.5						
YALB162M8		M8	44.5	1.8	28.4	13.2	98.0						
YALB162M10		M10	44.5	1.5	28.4	14.7	103.6						
YALB162M12		M12	44.5	3.0	28.4	19.1	107.7						
YALB252M5	25	M5	44.5	2.3	31.8	14.0	98.0		W3CRT (2)	W3CRT (2)	U3CRT (2)	9	33
YALB252M6		M6	44.5	2.3	31.8	14.0	101.1						
YALB252M8		M8	44.5	2.3	31.8	14.0	102.9						
YALB252M10		M10	44.5	2.0	31.8	14.7	105.9						
YALB252M12		M12	44.5	3.0	31.8	21.1	112.5						
YALB352M5	35	M5	44.5	2.5	35.1	17.3	102.1	Y1MRTC (4) MY29-11 (2) MRC840 (2) Y644HSXT (1) PAT644XT18V (1) Y81KFT (1) PAT81KFT-18V (1)	W2CVT (2) W2CRT (2) X2CRT (2)	W2CVT (2) W2CRT (2) X2CRT (2)	U2CRT (2)	10	37
YALB352M6		M6	44.5	2.5	35.1	17.3	105.2						
YALB352M8		M8	44.5	2.5	35.1	17.3	106.8						
YALB352M10		M10	44.5	2.5	35.1	17.3	110.0						
YALB352M12		M12	44.5	3.0	35.1	21.1	116.4						
YALB502M6	50	M6	44.5	2.5	35.1	17.3	105.2	MY29-11 (2) MRC840 (4) Y644HSXT (1) PAT644XT18V (1) Y81KFT (2) PAT81KFT-18V (2)	W25VT (4) W25RT (4) X25RT (4)	W25VT (4) W25RT (4) X25RT (4)	U25RT (2)	12	37
YALB502M8		M8	44.5	2.5	35.1	17.3	106.7						
YALB502M10		M10	44.5	2.5	35.1	17.3	110.0						
YALB502M12		M12	44.5	3.0	35.1	21.1	116.3						
YALB502M14		M14	44.5	3.0	35.1	21.1	117.3						
YALB502M16		M16	44.5	3.0	35.1	21.1	122.7						

* Use equivalent AWG setting on tool for installation

** PUADP-1 Adaptor is required to use "U" Dies in Y46 and PAT46 series tools

† P-RT Die sets for use in Y46 only, PUADP-1 Adaptor not required

Blue highlighted items are industry standard and most frequently ordered.

TWO HOLE HYLUG™ CODE CONDUCTOR LONG BARREL

TYPE YALB-2M
(Continued)

Electro-Tin Plated

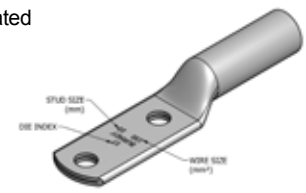

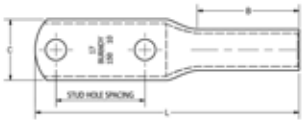

Catalog Number	Wire Range (MM²)	Stud Size	Stud Hole Spacing	Dimensions (mm)				Installtion Tooling					Wire Strip Length (mm)
									Mechanical		Hydraulic		
				Tongue Thickness	(B)	(C)	(L)	Dieless*	MD6, OUR840, MD7-34R	PAT600, Y500CTHS	Y35, Y39, Y750,PAT750, Y46**, PAT46**	Die Index	
YALB702M6	70	M6	44.5	3.0	38.1	21.1	110.0	MY29-11 (2) MRC840 (4) Y644HSXT (1) PAT644XT18V (1) Y81KFT (2) PAT81KFT-18V (2)	W26VT (4) W26RT (4) X26RT (4)	W26VT (4) W26RT (4) X26RT (4)	U26RT (2)	13	40
YALB702M8		M8	44.5	3.0	38.1	21.1	111.8						
YALB702M10		M10	44.5	3.0	38.1	21.1	114.8						
YALB702M12		M12	44.5	3.0	38.1	21.1	121.4						
YALB702M14		M14	44.5	3.0	38.1	21.1	122.2						
YALB702M16		M16	44.5	3.0	38.1	21.1	130.8						
YALB952M8	95	M8	44.5	3.3	38.1	23.6	113.0		W27VT (4) W27RT (4) X27RT (6)	W27VT (4) W27RT (4) X27RT (6)	U27RT (2)	14	40
YALB952M10		M10	44.5	3.3	38.1	23.6	116.1						
YALB952M12		M12	44.5	3.3	38.1	23.6	122.4						
YALB952M14		M14	44.5	3.3	38.1	23.6	123.4						
YALB952M16		M16	44.5	3.3	38.1	23.6	128.8						
YALB952M20		M20	44.5	4.1	38.1	30.5	140.0						
YALB1202M8	120	M8	44.5	3.8	41.1	29.0	118.6		W28VT (4) W28RT (4) X28RT (6)	W28VT (4) W28RT (4) X28RT (6)	U28RT (2)	15	43
YALB1202M10		M10	44.5	3.8	41.1	29.0	124.1						
YALB1202M12		M12	44.5	3.8	41.1	29.0	128.0						
YALB1202M14		M14	44.5	3.8	41.1	29.0	129.0						
YALB1202M16		M16	44.5	3.8	41.1	29.0	134.4						
YALB1202M20		M20	44.5	4.3	41.1	30.5	145.5						
YALB1502M8	150	M8	44.5	4.1	50.8	30.5	128.8	Y644HSXT (1) PAT644XT18V (1) Y81KFT (3) PAT81KFT-18V (3)	W30VT (4)	W30VT (4) W30RT (4)	U30RT (4)	17	52
YALB1502M10		M10	44.5	4.1	50.8	30.5	131.8						
YALB1502M12		M12	44.5	4.1	50.8	30.5	138.2						
YALB1502M14		M14	44.5	4.1	50.8	30.5	139.2						
YALB1502M16		M16	44.5	4.1	50.8	30.5	145.3						
YALB1502M20		M20	44.5	4.1	50.8	30.5	156.2						
YALB1852M8	185	M8	44.5	4.3	50.8	32.8	129.8		W31VT (4)	W31VT (4) W31RT (4)	U31RT (4)	18	52
YALB1852M10		M10	44.5	4.3	50.8	32.8	132.8						
YALB1852M12		M12	44.5	4.3	50.8	32.8	139.2						
YALB1852M14		M14	44.5	4.3	50.8	32.8	139.7						
YALB1852M16		M16	44.5	4.3	50.8	32.8	145.5						
YALB1852M20		M20	44.5	4.3	50.8	32.8	156.7						

* Use equivalent AWG setting on tool for installation

** PUADP-1 Adaptor is required to use "U" Dies in Y46 and PAT46 series tools

† P-RT Die sets for use in Y46 only, PUADP-1 Adaptor not required

Blue highlighted items are industry standard and most frequently ordered.

TWO HOLE HYLUG™ CODE CONDUCTOR LONG BARREL

TYPE YALB-2M
(Continued)

Electro-Tin Plated

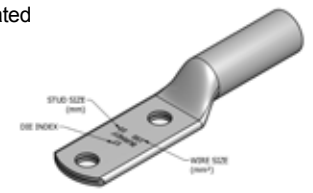

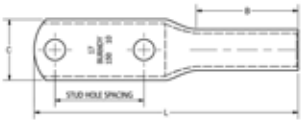

Catalog Number	Wire Range (MM²)	Stud Size	Stud Hole Spacing	Dimensions (mm)				Installtion Tooling					Wire Strip Length (mm)
									Mechanical		Hydraulic		
				Tongue Thickness	(B)	(C)	(L)	Dieless*	MD6, OUR840, MD7-34R	PAT600, Y500CTHS	Y35, Y39, Y750,PAT750, Y46**, PAT46**	Die Index	
YALB2402M10	240	M10	44.5	5.6	57.2	39.4	142.5	Y644HSXT (1) PAT644XT18V (1) Y81KFT (4) PAT81KFT-18V (4)	W34VT (4)	W34VT (4) W34RT (4)	U34RT (4)	20	59
YALB2402M12		M12	44.5	5.6	57.2	39.4	149.6						
YALB2402M14		M14	44.5	5.6	57.2	39.4	150.6						
YALB2402M16		M16	44.5	5.6	57.2	39.4	156.0						
YALB2402M20		M20	44.5	5.6	57.2	39.4	166.9						
YALB3002M10	300	M10	44.5	6.6	68.3	44.2	156.2		—	—	U36RT (4)	22	70
YALB3002M12		M12	44.5	6.6	68.3	44.2	162.6						
YALB3002M14		M14	44.5	6.6	68.3	44.2	163.6						
YALB3002M16		M16	44.5	6.6	68.3	44.2	168.9						
YALB3002M20		M20	44.5	6.6	68.3	44.2	179.6						
YALB4002M12	400	M12	44.5	7.6	74.7	50.3	171.4				U39RT (4)	24	76
YALB4002M14		M14	44.5	7.6	74.7	50.3	172.5						
YALB4002M16		M16	44.5	7.6	74.7	50.3	177.8						
YALB4002M20		M20	44.5	7.6	74.7	50.3	189.0						
YALB5002M12	500	M12	44.5	8.1	76.2	55.6	176.5				U44XRT (4)	L115	78
YALB5002M16		M16	44.5	8.1	76.2	55.6	182.9						
YALB5002M20		M20	44.5	8.1	76.2	55.6	194.1						
YALB6302M12	630	M12	44.5	9.7	81.0	62.5	183.9	—			† P45RT (6)	29	83
YALB6302M16		M16	44.5	9.7	81.0	62.5	190.5						
YALB6302M20		M20	44.5	9.7	81.0	62.5	201.4						

* Use equivalent AWG setting on tool for installation

** PUADP-1 Adaptor is required to use "U" Dies in Y46 and PAT46 series tools

† P-RT Die sets for use in Y46 only, PUADP-1 Adaptor not required

Blue highlighted items are industry standard and most frequently ordered.

ONE HOLE HYLUG™ FLEX CONDUCTOR STANDARD BARREL

TYPE YAV-FM

Made from electrolytic copper tube and is electro tin plate. Wire range is from 50 mm² to 630 mm² for class 5. Compatible to **IEC61238-1**.

Electro-Tin Plated

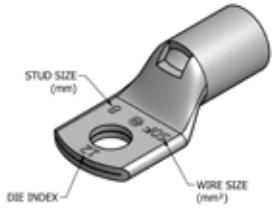

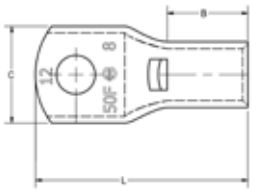

Catalog Number	Wire Range (MM²)	Stud Size	Dimensions (mm)				Installation Tooling					Wire Strip Length
			Tongue Thickness	(B)	(C)	(L)	Dieless*	Mechanical		Hydraulic	Die Index	
								MD6, OUR840, MD7-34R	BCT500HS, Y500CTHS	Y35, Y39, Y750, PAT750, Y46**, PAT46**		
YAV50FM6	50	M6	3.0	17.5	21.1	46.0	MY29-11 (1) MRC840 (2) Y644HSXT (1) PAT644XT18V (1) Y81KFT (1) PAT81KFT-18V (1)	W25VT (2) W25RT (2) X25RT (2)	W25VT (2) W25RT (2) X25RT (2)	U25RT (1)	12	19
YAV50FM8		M8	3.0	17.5	21.1	46.0						
YAV50FM10		M10	3.0	17.5	21.1	49.3						
YAV50FM12		M12	3.0	17.5	21.1	55.6						
YAV50FM14		M14	3.0	17.5	22.4	56.6						
YAV50FM16		M16	3.0	17.5	22.4	61.9						
YAV70FM6	70	M6	3.3	20.6	23.6	49.0	MY29-11 (1) MRC840 (2) Y644HSXT (1) PAT644XT18V (1) Y81KFT (1) PAT81KFT-18V (1)	W26VT (2) W26RT (2) X26RT (2)	W26VT (2) W26RT (2) X26RT (2)	U26RT (1)	13	22
YAV70FM8		M8	3.3	20.6	23.6	50.3						
YAV70FM10		M10	3.3	20.6	23.6	54.0						
YAV70FM12		M12	3.3	20.6	23.6	60.0						
YAV70FM14		M14	3.3	20.6	23.6	61.0						
YAV70FM16		M16	3.3	20.6	23.6	66.3						
YAV95FM8	95	M8	3.6	25.4	26.2	56.0	MY29-11 (1) MRC840 (2) Y644HSXT (1) PAT644XT18V (1) Y81KFT (2) PAT81KFT-18V (2)	W27VT (2) W27RT (2) X27RT (3)	W27VT (2) W27RT (2) X27RT (3)	U27RT (1)	14	27
YAV95FM10		M10	3.6	25.4	26.2	59.0						
YAV95FM12		M12	3.6	25.4	26.2	66.0						
YAV95FM14		M14	3.6	25.4	26.2	66.8						
YAV95FM16		M16	3.6	25.4	26.2	72.1						
YAV95FM20		M20	3.6	25.4	26.2	83.2						
YAV120FM8	120	M8	3.8	26.2	29.0	58.2	MY29-11 (1) MRC840 (2) Y644HSXT (1) PAT644XT18V (1) Y81KFT (2) PAT81KFT-18V (2)	W28VT (2) W28RT (2) X28RT (3)	W28VT (2) W28RT (2) X28RT (3)	U28RT (1)	15	27
YAV120FM10		M10	3.8	26.2	29.0	61.0						
YAV120FM12		M12	3.8	26.2	29.0	68.0						
YAV120FM14		M14	3.8	26.2	29.0	68.8						
YAV120FM16		M16	3.8	26.2	29.0	74.1						
YAV120FM20		M20	3.8	26.2	29.0	85.2						
YAV150FM8	150	M8	4.6	26.9	32.8	60.2	Y644HSXT (1) PAT644XT18V (1) Y81KFT (2) PAT81KFT-18V (2)	W30VT (2)	W30VT (2) W30RT (2)	U30RT (2)	17	29
YAV150FM10		M10	4.6	26.9	32.8	64.0						
YAV150FM12		M12	4.6	26.9	32.8	70.0						
YAV150FM14		M14	4.6	26.9	32.8	70.8						
YAV150FM16		M16	4.6	26.9	32.8	76.0						
YAV150FM20		M20	4.6	26.9	32.8	87.3						

* Use equivalent AWG setting on tool for installation

** PUADP-1 Adaptor is required to use "U" Dies in Y46 and PAT46 series tools

† P-RT Die sets for use in Y46 only, PUADP-1 Adaptor not required

Blue highlighted items are industry standard and most frequently ordered.

ONE HOLE HYLUG™ FLEX CONDUCTOR STANDARD BARREL

TYPE YAV-FM

(Continued)

Electro-Tin Plated

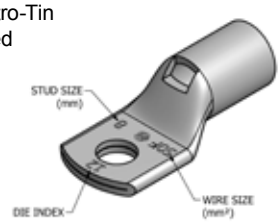

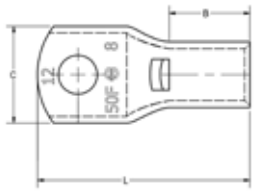

Catalog Number	Wire Range (MM²)	Stud Size	Dimensions (mm) Tongue Thickness	(B)	(C)	(L)	Installation Tooling: Dieless*	Mechanical: MD6, OUR840, MD7-34R	Mechanical: BCT500HS, Y500CTHS	Hydraulic: Y35, Y39, Y750, PAT750, Y46**, PAT46**	Die Index	Wire Strip Length
YAV185FM8	185	M8	5.0	30.2	35.6	64.8	Y644HSXT (1) PAT644XT18V (1) Y81KFT (2) PAT81KFT-18V (2)	W31VT (2)	W31VT (2) W31RT (2)	U31RT (2)	18	29
YAV185FM10		M10	5.0	30.2	35.6	68.0						
YAV185FM12		M12	5.0	30.2	35.6	74.0						
YAV185FM14		M14	5.0	30.2	35.6	75.4						
YAV185FM16		M16	5.0	30.2	35.6	81.0						
YAV185FM20		M20	5.0	30.2	35.6	91.8						
YAV240FM10	240	M10	5.8	32.3	39.4	72.9	Y644HSXT (1) PAT644XT18V (1) Y81KFT (2) PAT81KFT-18V (2)	W34VT (2)	W34VT (2) W34VT (2)	U34RT (2)	20	33
YAV240FM12		M12	5.8	32.3	39.4	79.0						
YAV240FM14		M14	5.8	32.3	39.4	80.2						
YAV240FM16		M16	5.8	32.3	39.4	85.5						
YAV240FM20		M20	5.8	32.3	39.4	96.6						
YAV300FM10	300	M10	6.9	36.8	46.7	80.2	Y644HSXT (1) PAT644XT18V (1) Y81KFT (2) PAT81KFT-18V (2)			U36RT (2)	22	38
YAV300FM12		M12	6.9	36.8	46.7	87.0						
YAV300FM14		M14	6.9	36.8	46.7	87.5						
YAV300FM16		M16	6.9	36.8	46.7	93.0						
YAV300FM20		M20	6.9	36.8	46.7	104.0						
YAV400FM12	400	M12	7.6	36.1	50.3	87.0	Y644HSXT (1) PAT644XT18V (1) Y81KFT (3) PAT81KFT-18V (3)			U39RT (3)	24	37
YAV400FM14		M14	7.6	36.1	50.3	88.1						
YAV400FM16		M16	7.6	36.1	50.3	93.5						
YAV400FM20		M20	7.6	36.1	50.3	104.5						
YAV500FM12	500	M12	8.4	41.9	55.6	96.0	Y644HSXT (1) PAT644XT18V (1) Y81KFT (3) PAT81KFT-18V (3)			U44XRT (3)	L115	43
YAV500FM16		M16	8.4	41.9	55.6	102.6						
YAV500FM20		M20	8.4	41.9	55.6	113.7						
YAV630FM12	630	M12	9.9	50.8	68.3	110.2	—			† P46RT (3)	31	55
YAV630FM16		M16	9.9	50.8	68.3	116.6						
YAV630FM20		M20	9.9	50.8	68.3	127.8						

* Use equivalent AWG setting on tool for installation

** PUADP-1 Adaptor is required to use "U" Dies in Y46 and PAT46 series tools

† P-RT Die sets for use in Y46 only, PUADP-1 Adaptor not required

Blue highlighted items are industry standard and most frequently ordered.

ONE HOLE HYLUG™ FLEX CONDUCTOR LONG BARREL

TYPE YALB-FM

Made from electrolytic copper tube and is electro tin plate. Wire range is from 50 mm² to 630 mm² for class 5. Compatible to **IEC61238-1**.

Electro-Tin Plated

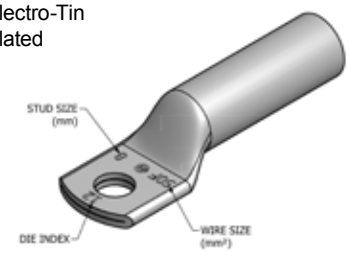

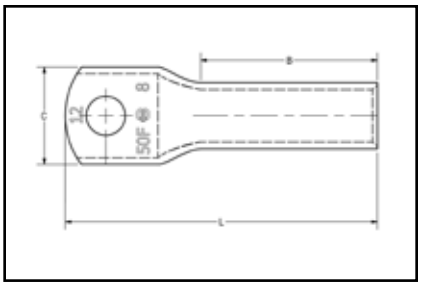

Catalog Number	Wire Range (MM²)	Stud Size	Dimensions (mm) Tongue Thickness	(B)	(C)	(L)	Installation Tooling Dieless*	Mechanical MD6, OUR840, MD7-34R	Mechanical BCT500HS, Y500CTHS	Hydraulic Y35, Y39,Y750, PAT750,Y46**, PAT46**	Die Index	Wire Strip Length
YALB50FM6	50	M6	3.0	38.1	21.1	65.5	MY29-11 (2) MRC840 (4) Y644HSXT (1) PAT644XT18V (1) Y81KFT (2) PAT81KFT-18V (2)	W25VT (4) W25RT (4) X25RT (4)	W25VT (4) W25RT (4) X25RT (4)	U25RT (2)	12	40
YALB50FM8		M8	3.0	38.1	21.1	67.3						
YALB50FM10		M10	3.0	38.1	21.1	70.4						
YALB50FM12		M12	3.0	38.1	21.1	76.7						
YALB50FM14		M14	3.0	38.1	21.1	77.7						
YALB50FM16		M16	3.0	38.1	21.1	86.4						
YALB70FM6	70	M6	3.3	38.1	23.6	66.3	MY29-11 (2) MRC840 (4) Y644HSXT (1) PAT644XT18V (1) Y81KFT (2) PAT81KFT-18V (2)	W26VT (4) W26RT (4) X26RT (4)	W26VT (4) W26RT (4) X26RT (4)	U26RT (2)	13	
YALB70FM8		M8	3.3	38.1	23.6	68.5						
YALB70FM10		M10	3.3	38.1	23.6	71.7						
YALB70FM12		M12	3.3	38.1	23.6	78.0						
YALB70FM14		M14	3.3	38.1	23.6	79.0						
YALB70FM16		M16	3.3	38.1	23.6	84.3						
YALB95FM8	95	M8	3.6	38.1	26.2	68.8	MY29-11 (2) MRC840 (4) Y644HSXT (1) PAT644XT18V (1) Y81KFT (2) PAT81KFT-18V (2)	W27VT (4) W27RT (4) X27RT (6)	W27VT (4) W27RT (4) X27RT (6)	U27RT (2)	14	
YALB95FM10		M10	3.6	38.1	26.2	72.1						
YALB95FM12		M12	3.6	38.1	26.2	78.5						
YALB95FM14		M14	3.6	38.1	26.2	79.5						
YALB95FM16		M16	3.6	38.1	26.2	84.8						
YALB95FM20		M20	3.6	38.1	26.2	96.0						
YALB120FM8	120	M8	3.8	41.1	29.0	73.9	MY29-11 (2) MRC840 (4) Y644HSXT (1) PAT644XT18V (1) Y81KFT (2) PAT81KFT-18V (2)	W28VT (4) W28RT (4) X28RT (6)	W28VT (4) W28RT (4) X28RT (6)	U28RT (2)	15	43
YALB120FM10		M10	3.8	41.1	29.0	79.5						
YALB120FM12		M12	3.8	41.1	29.0	83.6						
YALB120FM14		M14	3.8	41.1	29.0	84.6						
YALB120FM16		M16	3.8	41.1	29.0	89.9						
YALB120FM20		M20	3.8	41.1	29.0	101.1						
YALB150FM8	150	M8	4.3	50.8	32.8	85.1	Y644HSXT (1) PAT644XT18V (1) Y81KFT (3) PAT81KFT-18V (3)	W30VT (4)	W30VT (4) W30RT (4)	U30RT (4)	17	52
YALB150FM10		M10	4.3	50.8	32.8	88.4						
YALB150FM12		M12	4.3	50.8	32.8	94.7						
YALB150FM14		M14	4.3	50.8	32.8	95.3						
YALB150FM16		M16	4.3	50.8	32.8	101.1						
YALB150FM20		M20	4.3	50.8	32.8	112.3						

* Use equivalent AWG setting on tool for installation.

** PUADP-1 Adaptor is required to use "U" Dies in Y46 and PAT46 series tools.

† P-RT Die sets for use in Y46 only, PUADP-1 Adaptor not required.

Blue highlighted items are industry standard and most frequently ordered.

ONE HOLE HYLUG™ FLEX CONDUCTOR LONG BARREL

TYPE YALB-FM

(Continued)

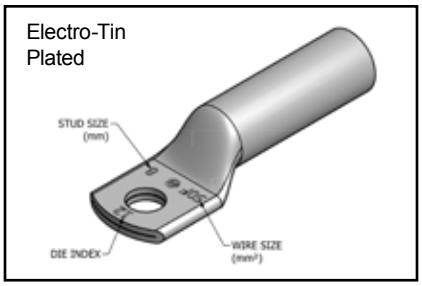

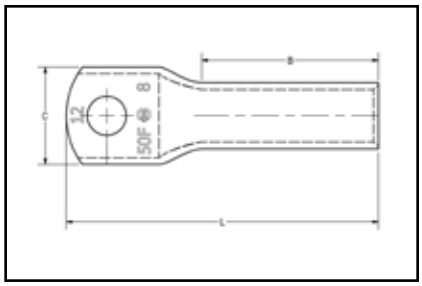

Catalog Number	Wire Range (MM²)	Stud Size	Dimensions (mm) Tongue Thickness	(B)	(C)	(L)	Installation Tooling: Dieless*	Mechanical MD6, OUR840, MD7-34R	Mechanical BCT500HS, Y500CTHS	Hydraulic Y35, Y39,Y750, PAT750,Y46**, PAT46**	Die Index	Wire Strip Length
YALB185FM8	185	M8	4.8	53.8	35.6	88.6	Y644HSXT (1) PAT644XT18V (1) Y81KFT (3) PAT81KFT-18V (3)	W31VT (4)	W31VT (4) W31RT (4)	U31RT (4)	18	52
YALB185FM10		M10	4.8	53.8	35.6	91.7						
YALB185FM12		M12	4.8	53.8	35.6	98.0						
YALB185FM14		M14	4.8	53.8	35.6	99.1						
YALB185FM16		M16	4.8	53.8	35.6	104.4						
YALB185FM20		M20	4.8	53.8	35.6	115.6						
YALB240FM10	240	M10	5.6	57.2	39.4	98.0	Y644HSXT (1) PAT644XT18V (1) Y81KFT (4) PAT81KFT-18V (4)	W34VT (4)	W34VT (4) W34RT (4)	U34RT (4)	20	59
YALB240FM12		M12	5.6	57.2	39.4	105.2						
YALB240FM14		M14	5.6	57.2	39.4	106.2						
YALB240FM16		M16	5.6	57.2	39.4	111.5						
YALB240FM20		M20	5.6	57.2	39.4	122.4						
YALB300FM10	300	M10	6.9	71.4	46.7	114.8	Y644HSXT (1) PAT644XT18V (1) Y81KFT (4) PAT81KFT-18V (4)	—	—	U36RT (4)	22	73
YALB300FM12		M12	6.9	71.4	46.7	121.2						
YALB300FM14		M14	6.9	71.4	46.7	122.2						
YALB300FM16		M16	6.9	71.4	46.7	127.5						
YALB300FM20		M20	6.9	71.4	46.7	138.7						
YALB400FM12	400	M12	7.6	74.7	50.3	127.0	Y644HSXT (1) PAT644XT18V (1) Y81KFT (4) PAT81KFT-18V (4)			U39RT (4)	24	76
YALB400FM14		M14	7.6	74.7	50.3	128.0						
YALB400FM16		M16	7.6	74.7	50.3	133.4						
YALB400FM20		M20	7.6	74.7	50.3	144.5						
YALB500FM12	500	M12	8.1	76.2	55.6	132.1	Y644HSXT (1) PAT644XT18V (1) Y81KFT (4) PAT81KFT-18V (4)			U44XRT (4)	L115	78
YALB500FM16		M16	8.1	76.2	55.6	138.4						
YALB500FM20		M20	8.1	76.2	55.6	149.4						
YALB630FM12	630	M12	9.9	81.0	68.3	140.5	—			† P46RT (6)	31	83
YALB630FM16		M16	9.9	81.0	68.3	146.8						
YALB630FM20		M20	9.9	81.0	68.3	158.0						

* Use equivalent AWG setting on tool for installation.

** PUADP-1 Adaptor is required to use "U" Dies in Y46 and PAT46 series tools.

† P-RT Die sets for use in Y46 only, PUADP-1 Adaptor not required.

Blue highlighted items are industry standard and most frequently ordered.

TWO HOLE HYLUG™ FLEX CONDUCTOR STANDARD BARREL

TYPE YAV-F2M

Made from electrolytic copper tube and is electro tin plate. Wire range is from 50 mm² to 630 mm² for class 5. Compatible to **IEC61238-1**.

Electro-Tin Plated

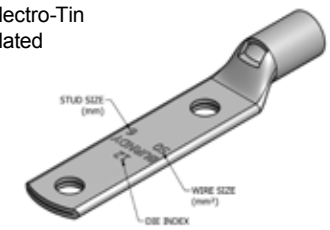

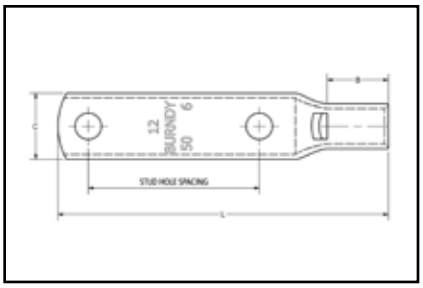

Catalog Number	Wire Range (MM²)	Stud Size	Stud Hole Spacing	Dimensions (mm)				Installtion Tooling					Wire Strip Length (mm)
									Mechanical		Hydraulic		
				Tongue Thickness	(B)	(C)	(L)	Dieless*	MD6, OUR840, MD7-34R	PAT600, Y500CTHS	Y35, Y39, Y750, PAT750, Y46**, PAT46**	Die Index	
YAV50F2M6	50	M6	44.5	3.0	17.5	21.1	89.2	MY29-11 (1) MRC840 (2) Y644HSXT (1) PAT644XT18V (1) Y81KFT (1) PAT81KFT-18V (1)	W25VT (2) W25RT (2) X25RT (2)	W25VT (2) W25RT (2) X25RT (2)	U25RT (1)	12	19
YAV50F2M8		M8	44.5	3.0	17.5	21.1	90.7						
YAV50F2M10		M10	44.5	3.0	17.5	21.1	94.0						
YAV50F2M12		M12	44.5	3.0	17.5	21.1	100.3						
YAV50F2M14		M14	44.5	3.0	17.5	22.4	101.3						
YAV50F2M16		M16	44.5	3.0	17.5	22.4	106.7						
YAV70F2M6	70	M6	44.5	3.3	20.6	23.6	93.2		W26RT (2) W26VT (2) X26RT (2)	W26RT (2) W26VT (2) X26RT (2)	U26RT (1)	13	22
YAV70F2M8		M8	44.5	3.3	20.6	23.6	95.0						
YAV70F2M10		M10	44.5	3.3	20.6	23.6	98.3						
YAV70F2M12		M12	44.5	3.3	20.6	23.6	104.6						
YAV70F2M14		M14	44.5	3.3	20.6	23.6	105.7						
YAV70F2M16		M16	44.5	3.3	20.6	23.6	111.0						
YAV95F2M8	95	M8	44.5	3.6	25.4	26.2	100.8	MY29-11 (1) MRC840 (2) Y644HSXT (1) PAT644XT18V (1) Y81KFT (2) PAT81KFT-18V (2)	W27VT (2) W27RT (2) X27RT (3)	W27VT (2) W27RT (2) X27RT (3)	U27RT (1)	14	27
YAV95F2M10		M10	44.5	3.6	25.4	26.2	104.1						
YAV95F2M12		M12	44.5	3.6	25.4	26.2	110.5						
YAV95F2M14		M14	44.5	3.6	25.4	26.2	111.5						
YAV95F2M16		M16	44.5	3.6	25.4	26.2	116.8						
YAV95F2M20		M20	44.5	3.6	25.4	26.2	128.0						
YAV120F2M8	120	M8	44.5	3.8	26.2	29.0	102.9		W28VT (2) W28RT (2) X28RT (3)	W28VT (2) W28RT (2) X28RT (3)	U28RT (1)	15	27
YAV120F2M10		M10	44.5	3.8	26.2	29.0	106.2						
YAV120F2M12		M12	44.5	3.8	26.2	29.0	112.5						
YAV120F2M14		M14	44.5	3.8	26.2	29.0	113.5						
YAV120F2M16		M16	44.5	3.8	26.2	29.0	118.9						
YAV120F2M20		M20	44.5	3.8	26.2	29.0	130.0						
YAV150F2M8	150	M8	44.5	4.6	26.9	32.8	104.9	Y644HSXT (1) PAT644XT18V (1) Y81KFT (2) PAT81KFT-18V (2)	W30VT (2)	W30VT (2) W30RT (2)	U30RT (2)	17	29
YAV150F2M10		M10	44.5	4.6	26.9	32.8	108.2						
YAV150F2M12		M12	44.5	4.6	26.9	32.8	114.6						
YAV150F2M14		M14	44.5	4.6	26.9	32.8	115.6						
YAV150F2M16		M16	44.5	4.6	26.9	32.8	120.9						
YAV150F2M20		M20	44.5	4.6	26.9	32.8	132.1						
YAV185F2M8	185	M8	44.5	4.8	30.2	35.6	109.5		W31VT (2)	W31VT (2) W31RT (2)	U31RT (2)	18	29
YAV185F2M10		M10	44.5	4.8	30.2	35.6	112.8						
YAV185F2M12		M12	44.5	4.8	30.2	35.6	119.1						
YAV185F2M14		M14	44.5	4.8	30.2	35.6	120.1						
YAV185F2M16		M16	44.5	4.8	30.2	35.6	125.5						
YAV185F2M20		M20	44.5	4.8	30.2	35.6	136.7						

* Use equivalent AWG setting on tool for installation.

** PUADP-1 Adaptor is required to use "U" Dies in Y46 and PAT46 series tools.

† P-RT Die sets for use in Y46 only, PUADP-1 Adaptor not required.

Blue highlighted items are industry standard and most frequently ordered.

TWO HOLE HYLUG™ FLEX CONDUCTOR STANDARD BARREL

TYPE YAV-F2M
(Continued)

Electro-Tin Plated

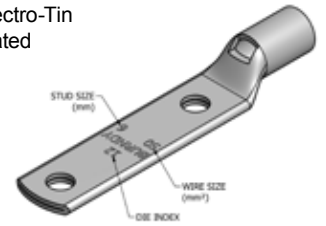

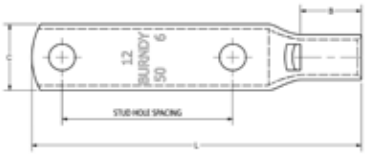

Catalog Number	Wire Range (MM²)	Stud Size	Stud Hole Spacing	Dimensions (mm)				Installtion Tooling					Wire Strip Length (mm)
									Mechanical		Hydraulic		
				Tongue Thickness	(B)	(C)	(L)	Dieless*	MD6, OUR840, MD7-34R	PAT600, Y500CTHS	Y35, Y39, Y750, PAT750, Y46**, PAT46**	Die Index	
YAV240F2M10	240	M10	44.5	5.8	32.3	39.4	117.6	Y644HSXT (1) PAT644XT18V (1) Y81KFT (2) PAT81KFT-18V (2)	W34VT (2)	W34VT (2) W34RT (2)	U34RT (2)	20	33
YAV240F2M12		M12	44.5	5.8	32.3	39.4	123.9						
YAV240F2M14		M14	44.5	5.8	32.3	39.4	124.9						
YAV240F2M16		M16	44.5	5.8	32.3	39.4	130.3						
YAV240F2M20		M20	44.5	5.8	32.3	39.4	141.3						
YAV300F2M10	300	M10	44.5	6.9	36.8	46.7	124.9		—	—	U36RT (2)	22	38
YAV300F2M12		M12	44.5	6.9	36.8	46.7	131.3						
YAV300F2M14		M14	44.5	6.9	36.8	46.7	132.2						
YAV300F2M16		M16	44.5	6.9	36.8	46.7	137.7						
YAV300F2M20		M20	44.5	6.9	36.8	46.7	148.7						
YAV400F2M12	400	M12	44.5	7.6	36.1	50.3	131.8	Y644HSXT (1) PAT644XT18V (1) Y81KFT (3) PAT81KFT-18V (3)	—	—	U39RT (3)	24	37
YAV400F2M14		M14	44.5	7.6	36.1	50.3	132.8						
YAV400F2M16		M16	44.5	7.6	36.1	50.3	138.2						
YAV400F2M20		M20	44.5	7.6	36.1	50.3	149.2						
YAV500F2M12	500	M12	44.5	8.4	41.9	55.6	140.9				U44XRT (3)	L115	43
YAV500F2M16		M16	44.5	8.4	41.9	55.6	147.3						
YAV500F2M20		M20	44.5	8.4	41.9	55.6	158.4						
YAV630F2M12	630	M12	44.5	9.9	50.8	68.3	154.9	—	—	—	† P46RT (3)	31	55
YAV630F2M16		M16	44.5	9.9	50.8	68.3	161.3						
YAV630F2M20		M20	44.5	9.9	50.8	68.3	172.4						

* Use equivalent AWG setting on tool for installation.

** PUADP-1 Adaptor is required to use "U" Dies in Y46 and PAT46 series tools.

† P-RT Die sets for use in Y46 only, PUADP-1 Adaptor not required.

Blue highlighted items are industry standard and most frequently ordered.

TWO HOLE HYLUG™ FLEX CONDUCTOR LONG BARREL

TYPE YALB-F2M

Made from electrolytic copper tube and is electro tin plate. Wire range is from 50 mm² to 630 mm² for class 5. Compatible to **IEC61238-1**.

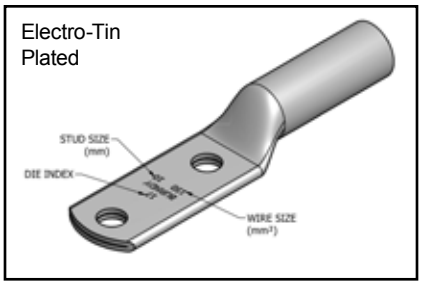

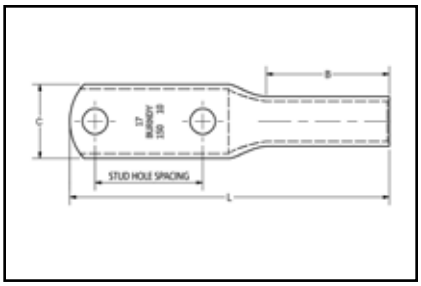

Catalog Number	Wire Range (MM²)	Stud Size	Stud Hole Spacing	Dimensions (mm)				Installtion Tooling					Wire Strip Length (mm)
				Tongue Width	(B)	(C)	(L)	Dieless*	Mechanical		Hydraulic	Die Index	
									MD6, OUR840, MD7-34R	PAT600, Y500CTHS	Y35, Y39,Y750, PAT750,Y46**, PAT46**		
YALB50F2M6	50	M6	44.5	3.0	38.1	21.1	110.2	MY29-11 (2) MRC840 (4) Y644HSXT (1) PAT644XT18V (1) Y81KFT (2) PAT81KFT-18V (2)	W25VT (4) W25RT (4) X25RT (4)	W25VT (4) W25RT (4) X25RT (4)	U25RT (2)	12	40
YALB50F2M8		M8	44.5	3.0	38.1	21.1	112.0						
YALB50F2M10		M10	44.5	3.0	38.1	21.1	115.1						
YALB50F2M12		M12	44.5	3.0	38.1	21.1	121.4						
YALB50F2M14		M14	44.5	3.0	38.1	21.1	122.4						
YALB50F2M16		M16	44.5	3.0	38.1	21.1	131.1						
YALB70F2M6	70	M6	44.5	3.3	38.1	23.6	111.0	MY29-11 (2) MRC840 (4) Y644HSXT (1) PAT644XT18V (1) Y81KFT (2) PAT81KFT-18V (2)	W26VT (4) W26RT (4) X26RT (4)	W26VT (4) W26RT (4) X26RT (4)	U26RT (2)	13	
YALB70F2M8		M8	44.5	3.3	38.1	23.6	113.3						
YALB70F2M10		M10	44.5	3.3	38.1	23.6	116.3						
YALB70F2M12		M12	44.5	3.3	38.1	23.6	122.7						
YALB70F2M14		M14	44.5	3.3	38.1	23.6	123.7						
YALB70F2M16		M16	44.5	3.3	38.1	23.6	129.0						
YALB95F2M8	95	M8	44.5	3.6	38.1	26.2	114.3		W27VT (4) W27RT (4) X27RT (6)	W27VT (4) W27RT (4) X27RT (6)	U27RT (2)	14	
YALB95F2M10		M10	44.5	3.6	38.1	26.2	117.6						
YALB95F2M12		M12	44.5	3.6	38.1	26.2	124.0						
YALB95F2M14		M14	44.5	3.6	38.1	26.2	125.0						
YALB95F2M16		M16	44.5	3.6	38.1	26.2	130.3						
YALB95F2M20		M20	44.5	3.6	38.1	26.2	141.2						
YALB120F2M8	120	M8	44.5	3.8	41.1	29.0	118.6		W28VT (4) W28RT (4) X28RT (6)	W28VT (4) W28RT (4) X28RT (6)	U28RT (2)	15	43
YALB120F2M10		M10	44.5	3.8	41.1	29.0	124.2						
YALB120F2M12		M12	44.5	3.8	41.1	29.0	128.3						
YALB120F2M14		M14	44.5	3.8	41.1	29.0	129.3						
YALB120F2M16		M16	44.5	3.8	41.1	29.0	134.6						
YALB120F2M20		M20	44.5	4.3	41.1	30.5	145.8						
YALB150F2M8	150	M8	44.5	4.3	50.8	32.8	129.8	Y644HSXT (1) PAT644XT18V (1) Y81KFT (3) PAT81KFT-18V (3)	W30VT (4)	W30VT (4) W30RT (4)	U30RT (4)	17	52
YALB150F2M10		M10	44.5	4.3	50.8	32.8	133.1						
YALB150F2M12		M12	44.5	4.3	50.8	32.8	139.4						
YALB150F2M14		M14	44.5	4.3	50.8	32.8	140.0						
YALB150F2M16		M16	44.5	4.3	50.8	32.8	145.8						
YALB150F2M20		M20	44.5	4.3	50.8	32.8	157.0						

* Use equivalent AWG setting on tool for installation.

** PUADP-1 Adaptor is required to use "U" Dies in Y46 and PAT46 series tools.

† P-RT Die sets for use in Y46 only, PUADP-1 Adaptor not required.

Blue highlighted items are industry standard and most frequently ordered.

TWO HOLE HYLUG™ FLEX CONDUCTOR LONG BARREL

TYPE YALB-F2M

(Continued)

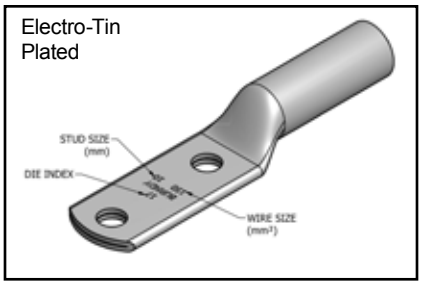

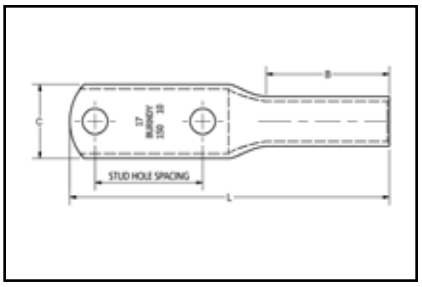

Catalog Number	Wire Range (MM²)	Stud Size	Stud Hole Spacing	Dimensions (mm)				Installtion Tooling					Wire Strip Length (mm)
									Mechanical		Hydraulic		
				Tongue Thickness	(B)	(C)	(L)	Dieless*	MD6, OUR840, MD7-34R	PAT600, Y500CTHS	Y35, Y39,Y750, PAT750,Y46**, PAT46**	Die Index	
YALB185F2M8	185	M8	44.5	4.8	53.8	35.6	134.1	Y644HSXT (1) PAT644XT18V (1) Y81KFT (3) PAT81KFT-18V (3)	W31VT (4)	W31VT (4) W31RT (4)	U31RT (4)	18	52
YALB185F2M10		M10	44.5	4.8	53.8	35.6	137.4						
YALB185F2M12		M12	44.5	4.8	53.8	35.6	143.8						
YALB185F2M14		M14	44.5	4.8	53.8	35.6	144.8						
YALB185F2M16		M16	44.5	4.8	53.8	35.6	150.1						
YALB185F2M20		M20	44.5	4.8	53.8	35.6	161.3						
YALB240F2M10	240	M10	44.5	5.6	57.2	39.4	142.7	Y644HSXT (1) PAT644XT18V (1) Y81KFT (4) PAT81KFT-18V (4)	W34VT (4)	W34VT (4) W34RT (4)	U34RT (4)	20	59
YALB240F2M12		M12	44.5	5.6	57.2	39.4	149.9						
YALB240F2M14		M14	44.5	5.6	57.2	39.4	150.9						
YALB240F2M16		M16	44.5	5.6	57.2	39.4	156.2						
YALB240F2M20		M20	44.5	5.6	57.2	39.4	167.1						
YALB300F2M10	300	M10	44.5	6.9	71.4	46.7	160.8		—	—	U36RT (4)	22	73
YALB300F2M12		M12	44.5	6.9	71.4	46.7	167.1						
YALB300F2M14		M14	44.5	6.9	71.4	46.7	168.1						
YALB300F2M16		M16	44.5	6.9	71.4	46.7	173.5						
YALB300F2M20		M20	44.5	6.9	71.4	46.7	184.7						
YALB400F2M12	400	M12	44.5	7.6	74.7	50.3	171.7				U39RT (4)	24	76
YALB400F2M14		M14	44.5	7.6	74.7	50.3	172.7						
YALB400F2M16		M16	44.5	7.6	74.7	50.3	178.1						
YALB400F2M20		M20	44.5	7.6	74.7	50.3	189.2						
YALB500F2M12	500	M12	44.5	8.1	76.2	55.6	176.8				U44XRT (4)	L115	78
YALB500F2M16		M16	44.5	8.1	76.2	55.6	183.1						
YALB500F2M20		M20	44.5	8.1	76.2	55.6	194.1						
YALB630F2M12	630	M12	44.5	9.9	81.0	68.3	186.9	—			† P46RT (6)	31	83
YALB630F2M16		M16	44.5	9.9	81.0	68.3	193.3						
YALB630F2M20		M20	44.5	9.9	81.0	68.3	204.5						

* Use equivalent AWG setting on tool for installation.

** PUADP-1 Adaptor is required to use "U" Dies in Y46 and PAT46 series tools.

† P-RT Die sets for use in Y46 only, PUADP-1 Adaptor not required.

Blue highlighted items are industry standard and most frequently ordered.

E-LINE HYLUG™ EQUIPMENT LINE

TYPE YA-E

COPPER AND ALUMINUM COMPRESSION TERMINAL

UL Listed 90° C,
600 Volts to 35 kV ♦

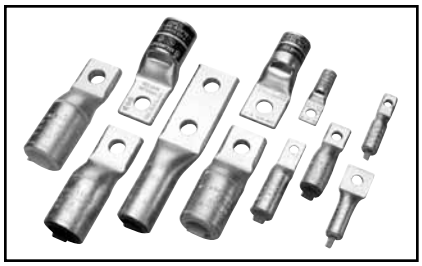

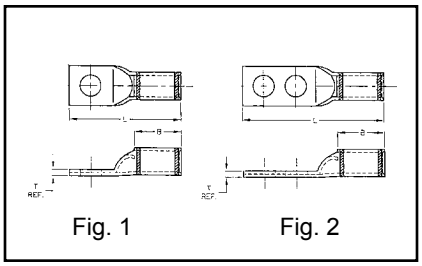

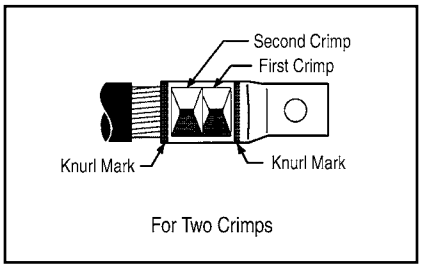

YA-E Equipment terminals are designed to provide replacements for original equipment mechanical or other compression terminals. These narrow tongue terminals are specially designed to fit in tight areas. Whether you're upgrading or replacing, YA-E connectors will provide for any of your cable termination needs. When installed with our dieless tool, these terminals can accommodate a range of conductor sizes.

COPPER E-LINE HYLUG™ COMPRESSION TERMINALS

Catalog Number	Fig. No.	Conductor Accommodations: Copper Only: Conventional Wire Size	Conductor Accommodations: Copper Only: Expanded Wire Range using Y644HSXT	Stud Hole Size	Stud Hole Spacing	Tongue Width (max)	Dimensions: B	Dimensions: T	Dimensions: L	† Installation Tooling: Dieless (number of crimps)	† Installation Tooling: Mechanical: MD6 , MD7 (number of crimps)	† Installation Tooling: Hydraulic: Y35, Y750, Y46*, PAT750 (number of crimps)	Color Code	Die Index	Wire Strip Length
YA25LN50T14E	1	1/0 AWG	#6 - 1/0 AWG	1/4"	—	0.50"	0.88"	0.12"	1.84"	Y644HSXT (1) PAT644XT-18VHS (1) Y81KFT (1) Y81KFTMBH (1) PAT81KFT-18V (1)	W25VT (2) W25RT (2)	U25RT (1) U2CABT (1)	Pink	12 or 348	15/16"
YA25LN64T516E	1			5/16"	—	0.64"	0.88″	0.12″	1.96"						
YA26LN50T14E	1	2/0 AWG	#4 - 2/0 AWG	1/4"	—	0.50"	0.94"	0.12"	1.94"		W26VT (2) W26RT (2)	U26RT (1)	Black	13	1"
YA30L24N100T38E	1	300 kcmil	2/0 AWG - 300 kcmil	3/8"	—	1.00"	1.03"	0.16"	2.44"	Y644HSXT (1) PAT644XT-18VHS (1) Y81KFT (2) Y81KFTMBH (2) PAT81KFT-18V (2)	W30RT (2)	U30RT (2) U28ART (2)	White	17 or 298	1-1/16"
YA34L6N131T12E	1	500 kcmil	4/0 AWG - 500 kcmil	1/2"	—	1.31"	1.27"	0.23"	3.31"		—	U34RT (2) U31ART (2) P34RT (2)	Brown	20 or 299	1-5/16"
YA342LNN119T12E	2			1/2″	1.75"	1.19"	1.27″	0.22″	5.06"						
YA342LNN131T12E				1/2″	1.75″	1.31"	1.27″	0.22″	5.06″						
YA39L6N131T12E	1	750 kcmil	500 - 750 kcmil	1/2"	—	1.31"	1.42"	0.27"	3.61"		—	U39RT (2)	Black	24	1-1/2"
YA392LNN131T12E	2			1/2″	1.745"	1.31″	1.42″	0.27″	5.37"						

ALUMINUM E-LINE HYLUG™ COMPRESSION TERMINALS

Catalog Number	Fig. No.	Conductor Accommodations: Aluminum: Conventional Wire Size	Conductor Accommodations: Copper or Aluminum: Expanded Wire Range using Y644HSXT	Stud Hole Size	Stud Hole Spacing	Tongue Width (max)	Dimensions: B	Dimensions: T	Dimensions: L	† Installation Tooling: Dieless (number of crimps)	† Installation Tooling: Hydraulic: Y35, Y750, Y46*, PAT750 (number of crimps)	Color Code	Die Index	Wire Strip Length
YA8CA3S56T14E	1	#8 AWG	#8 AWG	1/4"	—	0.56"	0.62"	0.09"	1.65"	Y644HSXT (1) PAT644XT-18VHS (1) Y81KFT (1) Y81KFTMBH (1) PAT81KFT-18V (1)	U8CABT (1)	Blue	374	11/16"
YA2CA5S53T14E	1	#2 AWG	#6 - #2 AWG	1/4"	—	0.53"	1.00"	0.22"	2.25"		U2CABT (1)	Pink	348	1-3/16"
YA2CA1S91T516E				5/16"	—	0.91"	1.12"	0.16"	2.50"					
YA25A1S60T516E	1	1/0 AWG	#1 - 1/0 AWG	5/16"	—	0.63"	1.00"	0.21"	2.29"		U25ART (1)	Tan	296	1-1/8"
YA25A3N69T38E				3/8"	—	0.69"	1.05"	0.21"	2.38"					
YA26A13N100T516E	1	2/0 AWG	#1 - 2/0 AWG	5/16"	—	1.00"	1.11"	0.24"	2.45"	Y644HSXT (1) PAT644XT-18VHS (1) Y81KFT (2) Y81KFTMBH (2) PAT81KFT-18V (2)	U26ART (2)	Olive	297	1-3/16"
YA26A6N100T38E				3/8"	—	1.00"	1.11″	0.24″	2.53"					
YA27A10S76T516E	1	3/0 AWG	#1 - 3/0 AWG	5/16"	—	0.76"	1.11"	0.26"	2.58"		U27ART (2)	Ruby	467	1-3/16"
YA28A1N100T38E	1	4/0 AWG	1/0 - 4/0 AWG	5/16"	—	1.00"	1.39"	0.30"	2.94"		U28ART (2)	White	298	1-7/16"
YA28A14N100T516E				3/8"	—	1.00"	1.39″	0.30″	2.85"					
YA30A9N100T516E	1	300 kcmil	2/0 AWG - 300 kcmil	5/16"	—	1.00"	1.53"	0.36"	3.12"		U30ART (2)	Blue	470	1-5/8"

† A variety of BURNDY® installation tools are available and not all tools are listed. If you require additional tooling information, please feel free to call our customer service department for other recommendations.

* Use PUADP-1 adapter with U dies in Y46 HYPRESS™, P-RT die sets for use in Y46 HYPRESS™ only. PUADP-1 adapter not required.

** 900 Compact Aluminum Cable not UL Listed. Tested with Y644HSXT and PAT644XT-18V dieless tools only.

Note: All dimensions shown are for reference only. Overlap crimps when using U Dies.

Blue highlighted items are industry standard and most frequently ordered.

E-LINE HYLUG™ EQUIPMENT LINE

TYPE YA-E

COPPER AND ALUMINUM COMPRESSION TERMINAL

UL Listed 90° C,
600 Volts to 35 kV ♦

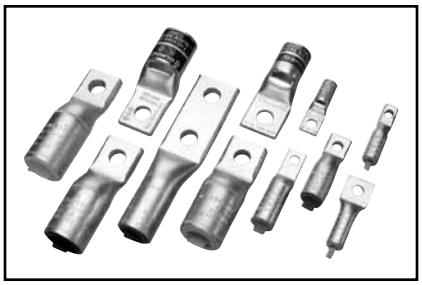

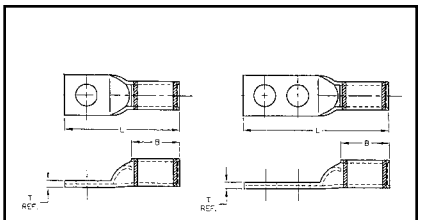

Fig. 1 Fig. 2

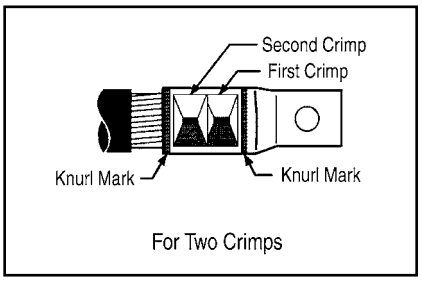

For Two Crimps

ALUMINUM E-LINE HYLUG™ COMPRESSION TERMINALS

Catalog Number	Fig. No.	Conductor Accommodations: Aluminum — Conventional Wire Size	Conductor Accommodations: Copper or Aluminum — Expanded Wire Range using Y644HSXT	Stud Hole Size	Stud Hole Spacing	Tongue Width (max)	Dimensions: B	Dimensions: T	Dimensions: L	† Installation Tooling: Dieless (number of crimps)	† Installation Tooling: Hydraulic Y35, Y750, Y46*, PAT750 (number of crimps)	Color Code	Die Index	Wire Strip Length
YA30A6N100T38E	1	300 kcmil	2/0 AWG - 300 kcmil	3/8"	—	1.00"	1.53"	0.36"	3.20"	Y644HSXT (1) PAT644XT-18VHS (1) Y81KFT (2) Y81KFTMBH (2) PAT81KFT-18V (2)	U30ART (2)	Blue	470	1-5/8"
YA30A1N131T12E				1/2"	—	1.31"	1.53″	0.35"	3.57"					
YA31A11N100T516E	1	350 kcmil	3/0 AWG - 350 kcmil	5/16"	—	1.00"	1.85"	0.39"	3.51"		U31ART (2)	Brown	299	1-7/8"
YA31A9N100T38E				3/8"	—	1.00″	1.85″	0.39″	3.59"					
YA32A8N106T516E	1	400 kcmil	4/0 AWG - 400 kcmil	5/16"	—	1.06"	2.26"	0.43"	3.92"		U32ART (4)	Green	472	2-5/16"
YA34A8N131T38E	1	500 kcmil	4/0 AWG - 500 kcmil	3/8"	—	1.31"	1.64"	0.35"	3.88"	Y644HSXT (2) PAT644XT-18VHS (2) Y81KFT (2) Y81KFTMBH (2) PAT81KFT-18V (2)	U34ART (4)	Pink	300	1-11/16"
YA34A7N131T12E				1/2"	—	1.31″	1.64″	0.35″	3.88"					
YA34A3N131T12E	2			1/2"	1.75	1.31″	1.64″	0.39"	5.71"					
YA36A9N131TD12E	1	600 kcmil	250 - 600 kcmil	1/2"	—	1.31"	1.64"	0.39"	3.98"					
YA36A3N131TD38E	2			3/8"	—	1.31″	1.64″	0.39″	5.32"					
YA36A3N131TD12E				1/2"	1.75	1.31″	1.64″	0.39″	5.71"					
YA39A1N131TD12E	1	750 kcmil	500 - 900 kcmil Aluminum 500 kcmil Copper Only	1/2"	—	1.31"	1.86"	0.31"	4.28"					1-15/16"
YA39A5N131TD12E	2			1/2"	1.75	1.31″	1.86″	0.31″	6.09"					

† A variety of BURNDY® installation tools are available and not all tools are listed. If you require additional tooling information, please feel free to call our customer service department for other recommendations.

* Use PUADP-1 adapter with U dies in Y46 HYPRESS™, P-RT die sets for use in Y46 HYPRESS™ only. PUADP-1 adapter not required.

** 900 Compact Aluminum Cable not UL Listed. Tested with Y644HSXT and PAT644XT-18V dieless tools only.

Note: All dimensions shown are for reference only. Overlap crimps when using U Dies.

Blue highlighted items are industry standard and most frequently ordered.

TYPE YSCM

HYLINK™

Color-Coded Uninsulated Parallel Splice

Type YSCM HYLINK™ seamless parallel splice connectors permit stranded wires to be laid parallel inside the connector and spliced together with BURNDY® compression tools. Each YSCM connector accommodates a wide range of conductors and is color-coded to ensure proper tool and die match. YSCM connectors are cULus Listed WIRE CONNECTORS per UL 486A/B for GROUNDING and BONDING, and UL 467 and rated for Direct Burial in Earth and Concrete.

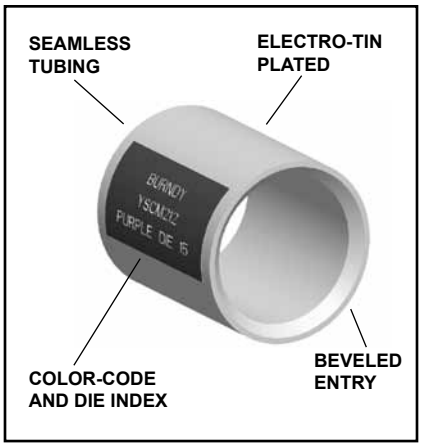

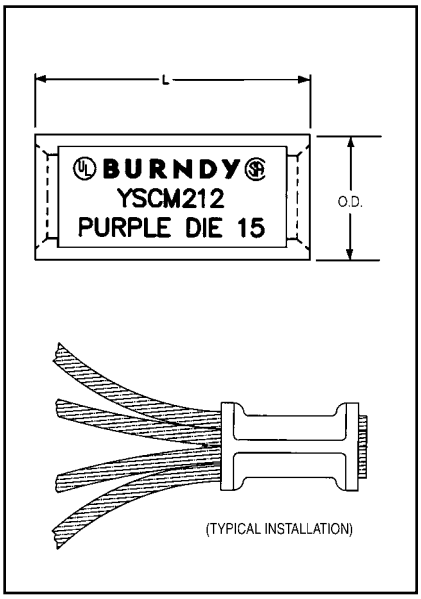

Catalog Number	Conductor Range Cable ‡ Circular Mils Min.	Max.	Dimensions Inches [mm] L ±.03	O.D. ±.01	Color Code	Die Index	Recommended Installation Tooling OUR840, Y500CTHS, PAT60018V Series	Y35, Y750, PAT750 Series	Wire Strip Length †
YSCM17	13,060	16,910	0.50 [13]	0.27 [7]	Red	49	X8CRT, W8CRT	U8CRT	11/16
YSCM27	16,910	26,890	0.50 [13]	0.31 [8]	Blue	7	X5CRT, W5CRT	U5CRT	11/16
YSCM42	29,970	41,520	0.50 [13]	0.38 [10]	Gray	8	X4CRT, W4CRT	U4CRT	11/16
YSCM66	42,750	66,040	0.62 [16]	0.47 [12]	Brown	10	X2CRT, W2CRT	U2CRT	3/4
YSCM80	67,980	80,020	0.62 [16]	0.52 [13]	Green	11	X1CRT-1, W1CRT-1	U1CRT-1	3/4
YSCM104	82,870	103,630	0.69 [18]	0.57 [14]	Pink	12	X25RT, W25RT	U25RT	15/16
YSCM133	104,960	133,220	0.81 [21]	0.64 [16]	Black	13	X26RT, W26RT	U26RT	1-1/16
YSCM167	134,340	166,560	0.81 [21]	0.70 [18]	Orange	14	X27RT, W27RT	U27RT	1-1/16
YSCM212	167,380	211,820	0.88 [22]	0.78 [20]	Purple	15	X28RT, W28RT	U28RT	1-1/16
YSCM231	230,800	230,800	1.05 [27]	0.81 [21]	Yellow	16	X29RT, W29RT*	U29RT	1-1/16

Notes:
1. Material: Copper per ASTM B75.
2. Finish: Tin plated. For nickel plating, add suffix "NK" to the Catalog Number.

† Recommended strip length. Strip length dependant on size, no. of wires and insulation thickness.

‡ Refer to Circular Mil Table per ASTM B8 for total Class B Circular Mil calculations.

* YSCM231 can also be installed with MY29-3 and retain Listings.

Add the circular mils of the wires you wish to splice; that sum would be used to determine the correct splice using the Min/Max columns on the table above.

The table to the right are for reference only.

Circular Mil Table per ASTM B8			
Size		ASTM Strandings	
Circular Mils	AWG	Class	Cable Diameter (in)
1,022	20	B	0.036
1,624	18	B	0.045
2,583	16	B	0.057
4,107	14	B	0.072
6,530	12	B	0.091
10,380	10	B	0.116
13,090	9	B	0.130
16,510	8	B	0.146
20,820	7	B	0.164
26,250	6	B	0.184
33,100	5	B	0.206
41,740	4	AA	0.254
41,740	4	B&A	0.232
52,630	3	AA	0.285
52,630	3	B&A	0.260

Circular Mil Table per ASTM B8			
Size		ASTM Strandings	
Circular Mils	AWG	Class	Cable Diameter (in)
66,370	2	AA	0.320
66,370	2	B&A	0.292
83,690	1	AA	0.360
83,690	1	A	0.328
83,690	1	B	0.332
105,500	1/0	A&A	0.368
105,500	1/0	—	0.390
105,500	1/0	B	0.373
133,100	2/0	A&A	0.414
133,100	2/0	—	0.438
133,100	2/0	B	0.419
167,800	3/0	A&A	0.464
167,800	3/0	—	0.492
167,800	3/0	B	0.470
211,600	4/0	A&A	0.522
211,600	4/0	—	0.522
211,600	4/0	B	0.528

Blue highlighted items are industry standard and most frequently ordered.

TYPE YS-L

HYLINK™ SPLICE STANDARD BARREL

COPPER COMPRESSION

UL Listed 90° C,
600 Volts to 35 kV ♦

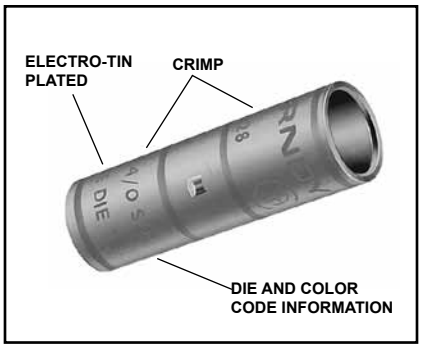

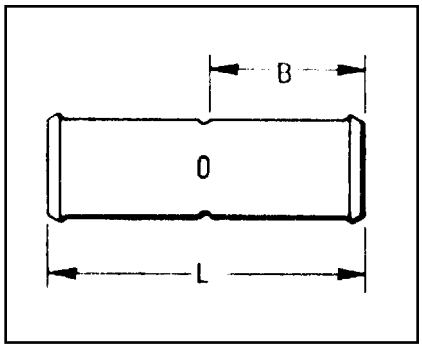

Features & Benefits

- Standard barrel length
  - ◊ Ideal for limited space applications while providing ample barrel length for proper crimp
- Four (4) center conductor stops
  - ◊ Provides a center wire stop for proper conductor insertion

Catalog Number	Conductor AWG	Conductor *** MM²	Dimensions L	Dimensions B	Installation Tooling ▲ Dieless (# of crimps)	Mechanical Y1MRTC Y2MR	Mechanical MD7-34R	Mechanical MD6 OUR840	Y35, ■Y39, Y750, Y46* Die Number (# crimps)	Y35, ■Y39, Y750, Y46* Color Code	▲ Die Index & Embossment	Wire Strip Length
YS8C-L-BOX	8 Str.	10	1.00	0.44	Y81KFT (1) Y81KFTMBH (1) PAT81KFT-18V (1)	Y1MRTC (1)	W8CVT (1)	X8CRT (1)	U8CRT (1)	Red	49	1/2"
YS6C-LBOX	6 Str.	—	1.75	0.81			W5CVT (1)	X5CRT (1)	U5CRT (1)	Blue	7 or 374	7/8"
YS5C-LBOX	5 Str.	16	1.90	0.81								
YS4C-LBOX	4 Str.	—	1.75	0.81		Y1MRTC (2)	W4CVT (1)	X4CRT (1)	U4CRT (1)	Gray	8 or 346	7/8"
YS3C-L	3 Str./ 2 Sol.	25	2.05	0.88			—	—	U3CRT (1)	White	9	15/16"
YS2C-LBOX	2 Str.	—	2.00	0.88			W2CVT (1)	X2CRT (1)	U2CRT (1)	Brown	10	15/16"
YS1C-LBOX	1 Str.	50	2.06	0.88			W1CVT (1)	X1CRT (1)	U1CRT-1 (1)	Green	11 or 375	15/16"
YS25-LBOX	1/0 Str.	—	2.08	0.88		—	W25VT (2)	X25RT (2)	U25RT (1)	Pink	12 or 348	15/16"
YS26-LBOX	2/0 Str.	70	2.17	0.94			W26VT (2)	X26RT (2)	U26RT (1)	Black	13	1"
YS27-LBOX	3/0 Str.	95	2.30	1.00	Y81KFT (2) Y81KFTMBH (2) PAT81KFT-18V (2)		W27VT (2)	X27RT (2)	U27RT (1)	Orange	14	1-1/16"
YS28-LBOX	4/0 Str.	—	2.32	1.00			W28VT (2)	X28RT (2)	U28RT (1)	Purple	15	1-1/16"
YS29-LBOX	250 kcmil	120	2.46	1.06			W29VT (2)	—	U29RT (1)	Yellow	16	1-1/8"
YS30-L	300 kcmil	150	2.47	1.06			W30VT (2)		U30RT (2)	White	17 or 298	1-1/8"
YS31-L	350 kcmil	185	2.60	1.12			W31VT (2)		U31RT (2)	Red	18 or 324	1-3/16"
YS32-L	400 kcmil	—	2.74	1.19			W32VT (2)		U32RT (2)	Blue	19 or 470	1-1/4"
YS34-L	500 kcmil	240	3.15	1.38			W34VT (2)		U34RT (2)	Brown	20 or 299	1-7/16"
YS36-L	600 kcmil	300	3.22	1.38			—		U36RT (2)	Green	22 or 472	1-7/16"
YS38-L	700 kcmil	—	3.22	1.38	Y81KFT (3) Y81KFTMBH (3) PAT81KFT-18V (3)				U38RT (2)	Pink	400	1-7/16"
YS39-L	750 kcmil	—	3.72	1.62					U39RT (2)	Black	24	1-11/16"
YS44-L	1000 kcmil	500	4.28	1.88					P44RT (2)**	White	27	1-15/16"

▲ See tooling section of this catalog for complete tool and die listings.

* Use PUADP-1 adapter with U dies in Y46 HYPRESS™.

** P44RT for use with Y46 HYPRESS™ only. PUADP-1 adaptor not required.

*** The MM² conductor sizes listed are the recommendations for Class 2 conductor.

■ The maximum size for the Y35 is 400 kcmil insulated code cable.

♦ For applications greater than 2000 Volts consult cable manufacturer for voltage stress relief instuctions.

Note: All dimensions shown are for reference only.

Blue highlighted items are industry standard and most frequently ordered.

TYPE YS

HYLINK™ SPLICE - LONG BARREL

COPPER COMPRESSION SPLICE

UL Listed 90° C,
600 Volts to 35 kV ♦

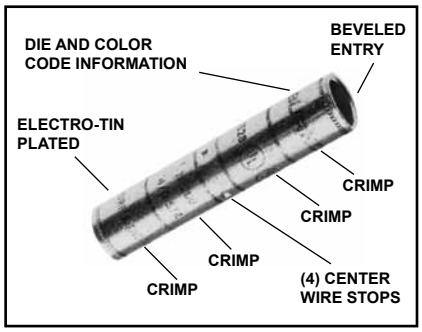

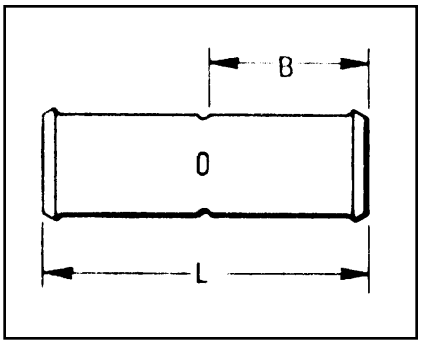

Features & Benefits

- Long barrel length
  - ◊ Ideal for 600 volt heavy duty applications Also may be used at higher voltages up to 35kV
- Four (4) center conductor stops
  - ◊ Provides a center wire stop for proper conductor insertion
- High pull out force
  - ◊ Provides added security for much greater mechanical and electrical properties

Catalog Number	Conductor AWG	*** MM²	Dimensions L	Dimensions B	Installation Tooling ▲ Dieless (# of crimps)	Mechanical Y1MRTC	Mechanical MD7-34R	Mechanical MD6 OUR840	Y35 ■, Y39, Y750, Y46* Die Number (# crimps)	Color Code	▲ Die Index & Embossment	Wire Strip Length
YS8C	8 Str.	10	1.75	0.78	Y81KFT (1) Y81KFTMBH (1) PAT81KFT-18V (1)	Y1MRTC (2)	W8CVT (2)	X8CRT (2)	U8CRT (2)	Red	49	7/8"
YS6C	6 Str.	—	2.38	1.09			W5CVT (2)	X5CRT (2)	U5CRT (2)	Blue	7 or 374	1-3/16"
YS5C	5 Str.	16	2.55	1.09								
YS4C	4 Str.	—	2.55	1.09		Y1MRTC (4)	W4CVT (2)	X4CRT (2)	U4CRT (2)	Gray	8 or 346	1-3/16"
YS3C	3 Str. / 2 Sol.	25	2.80	1.22	Y81KFT (2) Y81KFTMBH (2) PAT81KFT-18V (2)	Y1MRTC (4)	—	U3CRT (2)	—	White	9	1-5/16"
YR2C2WT	2 Str. / 2 Sol.	25	3.03	1.25			W2CVT (2) W2CRT (2)	W2CVT (2) W2CRT (2)	U2CRT (2)	Brown	10	1-5/8"
YS2C	2 Str.	35	2.82	1.22			W2CVT (2)	X2CRT (2)	U2CRT (2)	Brown	10	1-5/16"
YS1C	1 Str.	50	3.07	1.34			W1CVT (2)	X1CRT-1 (2)	U1CRT-1 (2)	Green	11 or 375	1-7/16"
YS25	1/0 Str.	—	3.08	1.34		—	W25VT (4)	X25RT (4)	U25RT (2)	Pink	12 or 348	1-7/16"
YS26	2/0 Str.	70	3.30	1.45			W26VT (4)	X26RT (4)	U26RT (2)	Black	13	1-9/16"
YS27	3/0 Str.	—	3.30	1.45			W27VT (4)	X27RT (4)	U27RT (2)	Orange	14	1-9/16"
YS28	4/0 Str.	—	3.57	1.58			W28VT (4)	X28RT (4)	U28RT (2)	Purple	15	1-11/16"
YS29	250 kcmil	120	3.58	1.58			W29VT (4)	—	U29RT (2)	Yellow	16	1-11/16"
YS30	300 kcmil	150	4.34	1.95	Y81KFT (3) Y81KFTMBH (3) PAT81KFT-18V (3)		W30VT (4)		U30RT (4)	White	17 or 298	2-1/16"
YS31	350 kcmil	185	4.35	1.95			W31VT (4)		U31RT (4)	Red	18 or 324	2-1/16"
YS32	400 kcmil	—	4.62	2.08			W32VT (4)		U32RT (4)	Blue	19 or 470	2-3/16"
YS34	500 kcmil	240	4.91	2.2	Y81KFT (4) Y81KFTMBH (4) PAT81KFT-18V (4)		W34VT (4)		U34RT (4)	Brown	20 or 299	2-5/16"
YS36	600 kcmil	300	5.85	2.63			—		U36RT (4)	Green	22 or 472	2-3/4"
YS39	750 kcmil	—	6.38	2.81					U39RT (4)	Black	24	2-15/16"
YS44	1000 kcmil	500	6.55	2.94					P44RT (2)**	White	27	3-1/16"
YS46	1500 kcmil	—	7.01	3.13	—				P46RT (6)**	Green	31	3-1/4"
YS48	2000 kcmil	—	7.57	3.27					L48RT (4)	Brown	34	3-3/8"

① Not color coded.
* Use PUADP-1 adapter with U dies in Y46 HYPRESS™.
** P44RT for use with Y46 HYPRESS™ only. PUADP-1 adapter not required.
*** The MM² conductor sizes listed are the recommendations for Class 2 conductor.
■ The maximum size for the Y35 is 400 kcmil.
▲ See tooling section of this catalog for complete tool and die listings
♦ For applications greater than 2000 Volts consult cable manufacturer for voltage stress relief instructions.
† Requires Y60BHU HYPRESS™ with L48RT die set.
Note: All dimensions shown are for reference only.

Blue highlighted items are industry standard and most frequently ordered.

TYPES Y-R

REDUCING ADAPTER

FOR COPPER

600 Volts to 35 kV ♦

The Y-R reducing adapter has been designed to allow large size, long barrel, copper long barrel. HYDENT™, HYSPLICE™ and HYTEE™ terminals, splices and T taps to be used on smaller conductor sizes. To use, simply insert the reducer into the barrel, insert the wire into the reducer adapter and crimp the outer barrel using its recommended tooling.

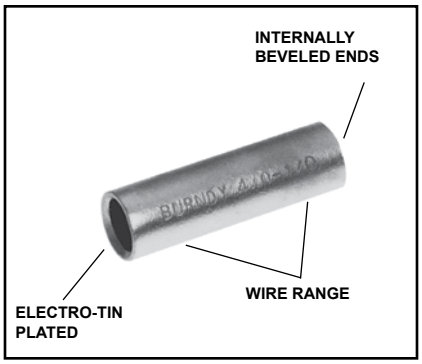

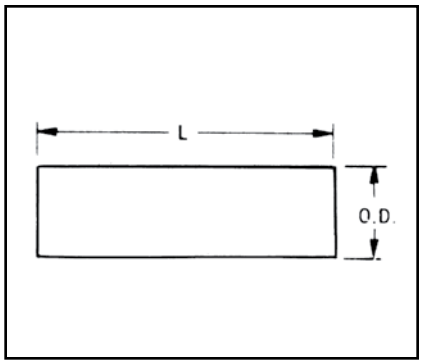

Features & Benefits

- Wide range of conductors are accommodated
  - ◊ Lowers inventory requirements and affords maximum versatility
- Same die set for all legs of the connection
  - ◊ Permits the same tool and die combination normally used on the compression barrel
- Length fits the long barrel connector design (YS, YA)
  - ◊ Can be used on all long barrel connectors. Field cut to fit shorter length compression barrels (YS-L, YA-L)
- Manufactured from high conductivity electrolytic copper and electro-tin plated
  - ◊ Provides maximum conductivity low resistance and ductility for an excellent combination of electrical and crimp forming properties and provides long lasting corrosion resistance

Catalog Number	Wire Range		Dimensions	
	From	To	Max O.D.	L
Y286CR	4/0 Str.	6,8, Str. 6 Sol.	0.53	1.75
Y284WR		4 Sol.		
Y284CR		4 Str.		
Y282CR		2 Str.		
Y281CR		1 Str.		
Y2825R		1/0 Str.		
Y2826R		2/0 Str.		
Y2827R		3/0 Str.		
Y2928R	250 kcmil	4/0	0.58	1.62
Y304CR	300 kcmil	#4	0.64	2.00
Y302CR		#2		
Y3025R		1/0		
Y3026R		2/0		
Y3027R		3/0		
Y3028R		4/0		
Y3126R	350 kcmil	2/0	0.69	2.00
Y3128R		4/0		
Y3129R		250		
Y342CR	500 kcmil	2 Str.	0.82	2.50
Y3425R		1/0 Str.		
Y3426R		2/0 Str.		
Y3427R		3/0 Str.		
Y3428R		4/0 Str.		
Y3429R		250 kcmil		
Y3430R		300 kcmil		
Y3431R		350 kcmil		
Y3432R		400 kcmil		
Y3934R	750 kcmil	500 kcmil	1.02	2.88
Y3936R		600 kcmil		
Y4439R	1000 kcmil	750 kcmil	1.30	3.00

Contact Technical Support for other sizes not listed.

♦ For applications greater than 2000 Volts consult cable manufacturer for voltage stress relief instructions.

Note: All dimensions shown are for reference only.

Insert reducing adapter into splice connection as shown.

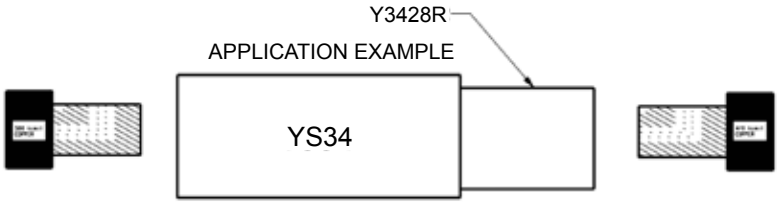

Crimp with U34RT, 4 crimps each side (a total of 8 crimps).

TYPE YS-LB

HYLINK™

UNINSULATED BELLED COPPER COMPRESSION SPLICE

STANDARD LENGTH BELLED BARREL

UL Listed 90° C,
600 Volts to 35 kV ♦

HYLINK™ type YS-LB splices are designed for flexible and extra flexible copper conductors used in mining machines, locomotives, welding cables and other flexible cable applications. The seamless, high conductivity copper, electro-tin plated belled barrel provides for easy insertion of flexible stranded conductors and the nest indentor die system provides an excellent electrical and mechanical connection.

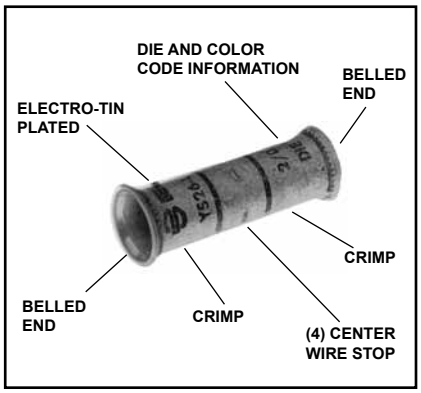

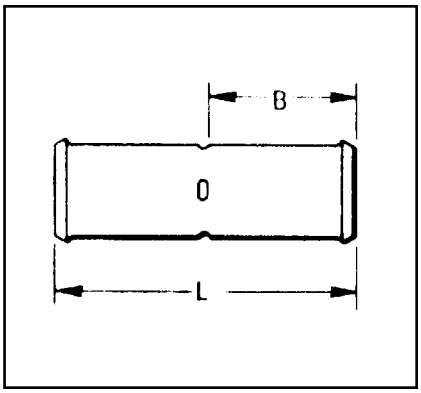

Features & Benefits

- Belled barrel ends
  - ◊ Provides easy cable insertion into the splice barrel and smooth cable strain relief during cable flexing and movement
- Standard length barrel
  - ◊ Permits easy passage around pulleys yet is long enough for easy crimping

Catalog Number	Flex Cable	Copper Cables * Flexible and Extra Flexible Cables: Class G	Class H	Class I	Battery Cable Class K	Welding Cable Class M	Locomotive Cable	Dimensions B	Dimensions L
YS5C-LB	6 Flex	#6 (49 str)	#6 (133 str)	#6 (63/24)	#6 (266/30)	#6 (665/34)	#6 (61/24)	0.81	1.82
YS4C-LB	5 Flex	#5 (49 str)	#5 (133 str)	#5 (84/24)	#5 (336/30)	#5 (836/34)	#5 (91/24)	0.81	1.84
YS3C-LB	4 Flex	#4 (49 str)	#4 (133 str)	#4 (105/24)	#4 (420/30)	#4 (1064/34)	#4 (105/24)	0.88	1.96
YS2C-LB	3 Flex	#3 (49 str)	#3 (133 str)	#3 (133/24)	#3 (532/30)	#3 (1323/24)	#3 (125/24)	0.87	1.98
YS1C-LB	2 Flex	#2 (49 str)	#2 (133 str)	#2 (161/24)	#2 (665/30)	#2 (1666/34)	#2 (150/24)	0.87	1.97
YS25-LB	1 Flex	#1 (133 str)	#1 (259 str)	#1 (210/24)	#1 (836/30)	#1 (2107/34)	#1 (225/24)	0.87	2.00
YS26-LB	1/0 Flex	1/0 (133 str)	1/0 (259 str)	1/0 (266/24)	1/0 (1064/30)	1/0 (2646/34)	1/0 (275/24)	0.93	2.12
YS27-LB	2/0 Flex	2/0 (133 str)	2/0 (259 str)	2/0 (342/24)	2/0 (1323/30)	2/0 (3325/34)	2/0 (325/24)	0.99	2.24
YS28-LB	3/0 Flex	3/0 (133 str)	3/0 (259 str)	3/0 (418/24)	3/0 (1666/30)	—	3/0 (450/24)	0.98	2.26
YS29-LB	4/0 Flex	4/0 (133 str)	4/0 (259 str)	—	—	—	—	1.04	2.40
YS30-LB	4/0 - 250 Flex	250 kcmil (259 str)	250 kcmil (427 str)	4/0 (532/24)	4/0 (2107/30)	4/0 (5320/34)	4/0 (550/24)	1.04	2.41
YS32-LB	300 kcmil	300 kcmil (259 str)	300 kcmil (427 str)	300 kcmil (735/24)	300 kcmil (2989/30)	300 kcmil (7581/34)	313.1 kcmil (775/24)	1.17	2.69
YS34-LB	350 kcmil 400 kcmil	350 kcmil (259 str) 400 kcmil (259 str)	350 kcmil (427 str) 400 kcmil (427 str)	350 kcmil (882/24) 400 kcmil (980/24)	350 kcmil (3458/30)	350 kcmil (8806/34)	373.7 kcmil (925/24)	1.35	3.10
YS38-LB	500 kcmil	550 kcmil (427 str)	550 kcmil (703 str)	500 kcmil (1225/24) 550 kcmil (1372/24)	500 kcmil (5054/30)	500 kcmil (12691/34)	535.3 kcmil (1325/24)	1.85	3.14

* Contact BURNDY® for conductors not shown.

♦ For applications greater than 2000 Volts consult cable manufacturer for voltage stress relief instructions.

Note: All dimensions shown are for reference only.

Blue highlighted items are industry standard and most frequently ordered.

TYPE YS-LB

INSTALLATION TOOLING CHART

UNINSULATED BELLED COPPER COMPRESSION SPLICE

STANDARD LENGTH BELLED BARREL

UL Listed 90° C,
600 Volts to 35 kV ♦

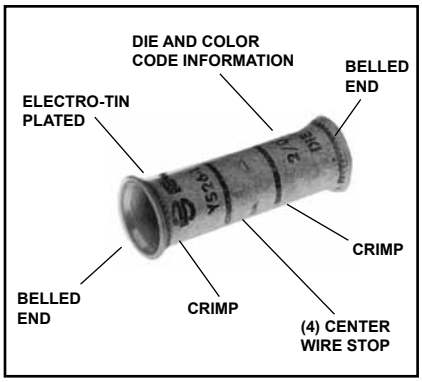

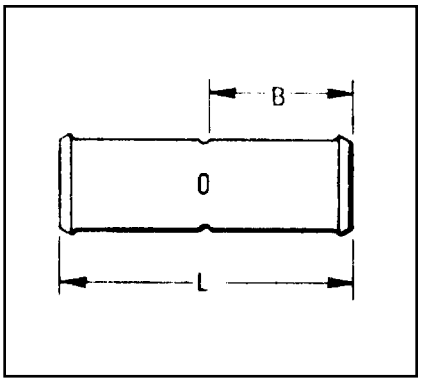

Catalog Number	Flex Cable	Installation Tooling ▲				Hydraulic						Wire Strip Length
		Dieless (# of Crimps)	Dieless HYTOOL™ (# of crimps)	Die Index	Die Type	Y35 †	Y39 †	Y750 †	Y45 †	Y46 * †	Y60BHU	
YS5C-LB ①	6 Flex	PAT644XT18V (1) Y644HSXT (1) Y644HSXTBH (1) Y81KFT (1) Y81KFTMBH (1) PAT81KFT-18V (1)	MR4C MY29-3 MY29-11	7	DIE SET	U5CRT	U5CRT	U5CRT	U5CRT	U5CRT	–	7/8"
				1014	NEST	U6CD-1	U6CD-1	U6CD-1	U6CD-1	U6CD-1	–	
					INDENTOR	Y34PR	Y34PR	Y34PR	Y34PR	Y34PR	–	
YS4C-LB	5 Flex		MR4C MY29-3 MY29-11	8	DIE SET	U4CRT	U4CRT	U4CRT	U4CRT	U4CRT	–	7/8"
				1015	NEST	U4CD-1	U4CD-1	U4CD-1	U4CD-1	U4CD-1	–	
					INDENTOR	Y34PR	Y34PR	Y34PR	Y34PR	Y34PR	–	
YS3C-LB	4 Flex		MY29-3 MY29-11	9	DIE SET	U3CRT	U3CRT	U3CRT	U3CRT	U3CRT	–	15/16"
				1016	NEST	U3CD-1	U3CD-1	U3CD-1	U3CD-1	U3CD-1	–	
					INDENTOR	Y34PR	Y34PR	Y34PR	Y34PR	Y34PR	–	
YS2C-LB	3 Flex		MY29-3 MY29-11	10	DIE SET	U2CRT	U2CRT	U2CRT	U2CRT	U2CRT	–	15/16"
				1017	NEST	U2CD-1	U2CD-1	U2CD-1	U2CD-1	U2CD-1	–	
					INDENTOR	Y34PR	Y34PR	Y34PR	Y34PR	Y34PR	–	
YS1C-LB	2 Flex		MY29-3 MY29-11	11	DIE SET	U1CRT-1	U1CRT-1	U1CRT-1	U1CRT-1	U1CRT-1	–	15/16"
				1018	NEST	U1CD-1	U1CD-1	U1CD-1	U1CD-1	U1CD-1	–	
					INDENTOR	Y34PR	Y34PR	Y34PR	Y34PR	Y34PR	–	
YS25-LB	1 Flex		MY29-3 MY29-11	12	DIE SET	U25RT	U25RT	U25RT	U25RT	U25RT	–	15/16"
				1019	NEST	U25D-1	U25D-1	U25D-1	U25D-1	U25D-1	–	
					INDENTOR	Y34PR-2	Y34PR-2	Y34PR-2	Y34PR-2	Y34PR-2	–	
YS26-LB	1/0 Flex		MY29-3 MY29-11	13	DIE SET	U26RT	U26RT	U26RT	U26RT	U26RT	–	1"
				1020	NEST	U26D-1	U26D-1	U26D-1	U26D-1	U26D-1	–	
					INDENTOR	Y34PR-2	Y34PR-2	Y34PR-2	Y34PR-2	Y34PR-2	–	
YS27-LB	2/0 Flex		MY29-3 MY29-11	14	DIE SET	U27RT	U27RT	U27RT	U27RT	U27RT	–	1-1/16"
				1021	NEST	U27D-1	U27D-1	U27D-1	U27D-1	U27D-1	–	
					INDENTOR	Y34PR-2	Y34PR-2	Y34PR-2	Y34PR-2	Y34PR-2	–	

† Use Y35P3 adaptor with Y34PR indentor.
* Use PUADP-1 adaptor with U-DIES in Y46 HYPRESS™.

▲ See Tooling section in this catalog for complete tool and die listings.
① Not color coded.

♦ For applications greater than 2000 Volts consult cable manufacturer for voltage stress relief instructions.
Note: All dimensions shown are for reference only.

Blue highlighted items are industry standard and most frequently ordered.

TYPE YS-LB
(Continued)

INSTALLATION TOOLING CHART

UNINSULATED BELLED COPPER COMPRESSION SPLICE

STANDARD LENGTH BELLED BARREL

UL Listed 90° C,
600 Volts to 35 kV ♦

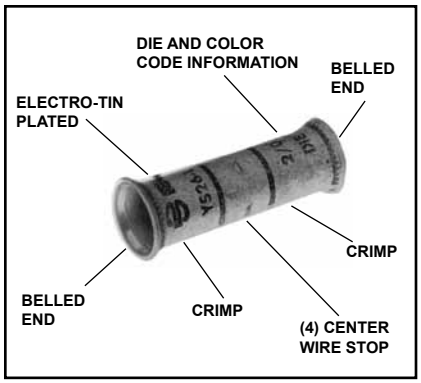

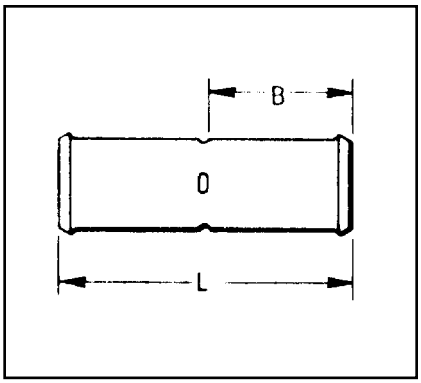

Catalog Number	Flex Cable	Installation Tooling ▲				Hydraulic						Wire Strip Length
		Dieless (# of Crimps)	Dieless HYTOOL™ (# of crimps)	Die Index	Die Type	Y35 †	Y39 †	Y750 †	Y45 †	Y46* †	Y60BHU	
YS28-LB	3/0 Flex	PAT644XT18V (2) Y644HSXT (2) Y644HSXTBH (2) Y81KFT (2) Y81KFTMBH (2) PAT81KFT-18V (2)	MY29-3 MY29-11	15	DIE SET	U28RT	U28RT	U28RT	U28RT	U28RT	–	1-1/16"
				1022	NEST	–	U28D-1	U28D-1	U28D-1	U28D-1	–	
					INDENTOR	–	Y34PR-2	Y34PR-2	Y34PR-2	Y34PR-2	–	
YS29-LB	4/0 Flex		MY29-3 MY29-11	16	DIE SET	U29RT	U29RT	U29RT	U29RT	U29RT	–	1-1/16"
				1023	NEST	–	U29D-1	U29D-1	U29D-1	U29D-1	–	
					INDENTOR	–	Y34PR-2	Y34PR-2	Y34PR-2	Y34PR-2	–	
YS30-LB	4/0-250 Flex		—	17	DIE SET	U30RT	U30RT	U30RT	U30RT	U30RT	L30RT	1-1/8"
				1024	NEST	–	U30D-1	U30D-1	U30D-1	U30D-1	–	
					INDENTOR	–	Y34PR-2	Y34PR-2	Y34PR-2	Y34PR-2	–	
YS32-LB	300 kcmil		—	19	DIE SET	U32RT	U32RT	U32RT	U32RT	U32RT	L32RT	1 1/4"
				1026	NEST	–	U32D-1	U32D-1	U32D-1	U32D-1	–	
					INDENTOR	–	Y34PR-2	Y34PR-2	Y34PR-2	Y34PR-2	–	
YS34-LB	300 kcmil 400 kcmil		—	20	DIE SET	–	U34RT	U34RT	U34RT	U34RT	L34RT	1 7/16"
				1027	NEST	–	U34D-1	U34D-1	U34D-1	U34D-1	–	
					INDENTOR	–	Y34PR-2	Y34PR-2	Y34PR-2	Y34PR-2	–	
YS38-LB	550 kcmil		—	400	DIE SET	U38RT	U38RT	U38RT	U38RT	U38RT	–	1 15/16"
				1029	NEST	–	–	–	–	P38D	–	
					INDENTOR	–	–	–	–	P48PR-1	–	

† Use Y35P3 adaptor with Y34PR indentor.
* Use PUADP-1 adaptor with U-DIES in Y46 HYPRESS™.

▲ See Tooling section in this catalog for complete tool and die listings.
① Not color coded.

♦ For applications greater than 2000 Volts consult cable manufacturer for voltage stress relief instructions.
Note: All dimensions shown are for reference only.

TYPES YS-T AND YSP-T

HIGH-VOLTAGE HYLINK™

UNINSULATED HIGH VOLTAGE COPPER COMPRESSION SPLICE

STANDARD BARREL - TAPERED ENDS

UL Listed 90° C,
600 Volts to 35 kV ♦

Seamless types YS-T and YSP-T high conductivity copper electro-tin plated compression HYLINK™ high-voltage splices with standard barrel and tapered ends are ideally suited for higher voltage applications from 5 kV through 35 kV.

Type YS-T splice connector has four center wire stops for proper conductor insertion.

Type YSP-T splice connector has a brazed in place center plug to prevent the passage of oil between two oil filled conductors or between conductors without oil and conductors with oil and acts as a center wire stop for proper conductor insertion.

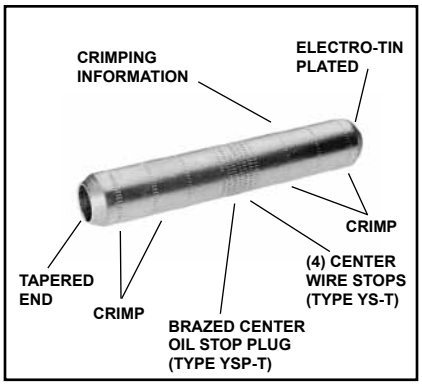

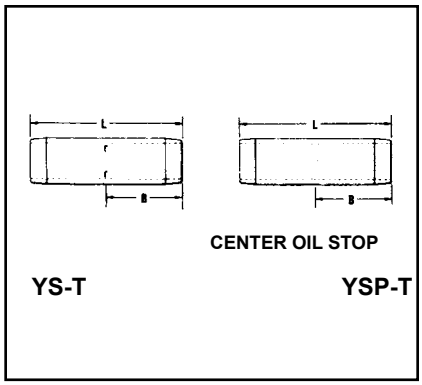

Features & Benefits

- Tapered connector ends per EEI standard TD160
  - ◊ Suitable for use on voltages 5 kV through 35 kV to aid in preventing corona emission and simplify taping thus lowering installed cost
- Type YS-T four center wire stops
  - ◊ Provides a center wire stop for proper conductor insertion
- Type YSP-T has a center plug permanently brazed in place
  - ◊ Prevents oil within oil-filled conductors from passing through the splice connector and provides a center strip for proper conductor insertion

Catalog Number		Code	Dimensions		Installation Tooling- Nest/Indentor ▲					Wire Strip Length
YS-T	YSP-T	Conductors	B	L	Y34B Y34PR Indentor Nest Die	Y35, Y39, Y750, Y34PR Indentor Y35P3 Adaptor Nest Die	Y35, Y39, Y750, Y46*, PAT750 Die Number (# of crimps per end)	Die Index ▲	No. of Indent	
YS6C-T**	—	6 Str.	0.90	2.16	B6CD	U6CD-1	U5CRT (2)	7	1	15/16"
YS4C-T**	YSP4C-T**	4 Str.	0.90	2.16	B4CD	U4CD-1	U4CRT (2)	8	1	15/16"
YS2C-T**	YSP2C-T**	2 Str.	0.98	2.34	B2CD	U2D-1	U2CRT (2)	10	1	1"
YS1C-T**	YSP1C-T**	1 Str.	0.97	2.31	B1CD	U1D-1	U1CRT-1 (2)	11	1	1"
YS25-T**	YSP25-T**	1/0 Str.	0.98	2.35	B25D	U25D-1	U25RT (2)	12	1	1-3/32"
YS26-T**	YSP26-T**	2/0 Str.	1.04	2.47	B26D	U26D-1	U26RT (2)	13	1	1-3/32"
YS28-T	YSP28-T	4/0 Str.	1.13	2.67	B28D	U28D-1	U28RT (2)	15	1	1-3/16"
YS29-T	YSP29-T	250 kcmil	1.21	2.85	B29D	U29D-1	U29RT (2)	16	1	1-3/32"
YS30-T	YSP30-T	300 kcmil	1.22	2.87	B30D	U30D-1	U30RT (4)	17	2	1-5/16"
YS31-T	YSP31-T	350 kcmil	1.32	3.09	B31D	U31D-1	U31RT (4)	18	2	1-3/5"
YS34-T	YSP34-T	500 kcmil	1.68	3.86	No Die Needed	U34D-1	U34RT (4)	20	2	1-3/4"
YS39-T	YSP39-T	750 kcmil	2.00	4.60	—	—	U39RT (4)	24	2	2-1/8"

* Use adapter PUADP-1 with U Dies in Y46 HYPRESS™. Y46 HYPRESS™ uses the same nest indentor and adaptor as the Y35, Y39 and Y750, but with the PUADP-1 adaptors.

** A 0.06 radius at each end is used for sizes 6-27.

■ The maximum size for the Y35 is 400 kcmil.

▲ See tooling section of this catalog for complete tool and die listings.

♦ For applications greater than 2000 Volts consult cable manufacturer for voltage stress relief instructions.

Note: All dimensions shown are for reference only.

Blue highlighted items are industry standard and most frequently ordered.

TYPE YS-FXB

HYLINK™ - SPLICE - BELLED LONG BARREL

UL Listed 90° C,
600 Volts to 35 kV ♦

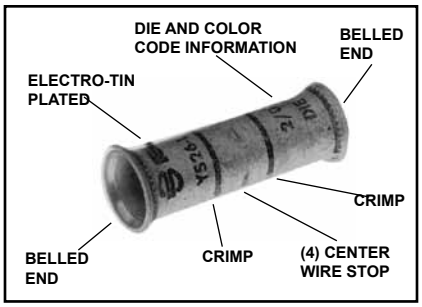

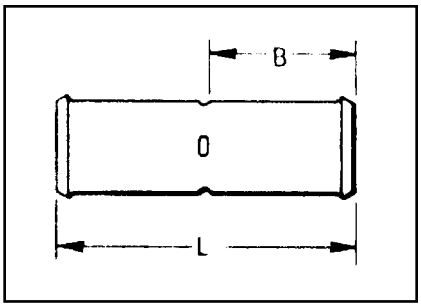

Features & Benefits

- Long barrel length
  - ◊ High voltage terminations
- Four (4) center conductor stops
  - ◊ Provides a center wire stop for proper conductor insertion
- High pull out force
  - ◊ Provides added security for greater mechanical and electrical properties
- Belled cable entry
  - ◊ A funnel type entry provide easy insertion of extra flexible cables plus offers mechanical strain relief for individual strands

Catalog Number	Conductor: Flexible Cable Code AWG	*** MM²	Dimensions: L (mm)	Dimensions: B (mm)	Installation Tooling: Dieless (# of crimps/end)	Mechanical: Y1MRTC	Y35 ■, Y39, Y750, Y46*: Embossed Die Index	Color Code	Die Number (# of crimps/end)	Cable Strip Length
YS8C-FXB	#8 Str. (37/24) #8 AWG	10	1.99 (51)	0.90 (23)	Y81KFT (1) Y81KFTMBH (1) PAT81KFT-18V (1)	Y1MRTC (2)	49	Red	U8CRT (2)	1" (25)
YSV6C-FXB	#6 Str. (61/24) #6 AWG	† 16	2.62 (67)	1.22 (31)		Y1MRTC (2)	7	Blue	U5CRT (2)	1-5/16" (33)
YSV4C-FXB	#4 Str. (91/24-105/24) #4 AWG	—	2.62 (67)	1.22 (31)		Y1MRTC (4)	8	Gray	U4CRT (2)	1-5/16" (33)
YSV2C-FXB	#2 Str. (125/24-105/24) #2 AWG	35	2.89 (73)	1.35 (34)		Y1MRTC (4)	10	Brown	U2CRT (2)	1-7/16" (37)
YSV1C-FXB	#1 Str. (175/24-225/24) #1 AWG	—	3.18 (81)	1.50 (38)		—	11	Green	U1CRT-1 (2)	1-9/16" (40)
YSV25-FXB	1/0 Str. (275/24) 1/0 AWG	50	3.18 (81)	1.50 (38)		—	12	Pink	U25RT (2)	1-9/16" (40)
YSV26-FXB	2/0 Str. (325/24) 2/0 AWG	70	3.44 (87)	1.63 (41)		—	13	Black	U26RT (2)	1-11/16" (43)
YSV27-FXB	3/0 Str. (450/24) 3/0 AWG	95	3.46 (88)	1.64 (42)	Y81KFT (2) Y81KFTMBH (2) PAT81KFT-18V (2)	—	14	Orange	U27RT (2)	1-11/16" (43)
YSV28-FXB	4/0 Str. (550/24) 4/0 AWG	† 120	3.72 (94)	1.77 (45)		—	15	Purple	U28RT (2)	1-7/8" (48)
YS30-FXB	250 kcmil Flex Class G 259 Str. Class H 427 Str.	—	4.51 (115)	2.16 (55)		—	16	Yellow	U29RT (2)	2-1/4" (57)
YS31-FXB	263 kcmil (650/24) 250 Flex Class I,K,M	150	4.54 (115)	2.18 (55)		—	17	White	U30RT (4)	2-1/4" (57)
YS32-FXB	313.1 kcmil (775/24) 300 kcmil Nom.	185	4.82 (122)	2.32 (59)		—	18	Red	U31RT (4)	2-7/16" (62)
YS34-FXB	373 kcmil (925/24) 350 kcmil Nom.	240	5.14 (131)	2.48 (63)		—	19	Blue	U32RT (4)	2-9/16" (65)
YS36-FXB	444.4 kcmil (1100/24) 450 kcmil Nom.	300	6.09 (155)	2.95 (75)		—	20	Brown	U34RT (4)	3-1/16" (79)
YS38-FXB	535.3 kcmil (1325/24) 500 kcmil Nom.	—	6.34 (161)	3.08 (78)	Y81KFT (3) Y81KFTMBH (3) PAT81KFT-18V (3)	—	L99	Pink	U38XRT (4)	3-3/16" (81)
YS40-FXB	646 kcmil (1600/24) 600 kcmil Nom.	400	6.66 (1.69)	3.24 (82)		—	24	Black	U39RT (4)	3-5/16" (84)
YS44-FXB	777.7 kcmil (1925/24) 750 kcmil Nom.	500	6.84 (174)	3.33 (85)		—	L115	Yellow	U44XRT (4)	3-7/16" (87)

* Use PUADP-1 adapter with U dies in Y46 HYPRESS™.
** P44RT and P46RT dies sets are for use with Y46 HYPRESS™ only. PUADP-1 adapter not required.
*** The MM² conductor sizes listed are the recommendations for Class 5 conductor.
† 16 MM² and 120 MM² referenced are for both Class 2 and Class 5
■ The maximum size for the Y35 is 373.7 kcmil.
▲ See tooling section of this catalog for complete tool and die listings.
♦ For applications greater than 2000 Volts consult cable manufacturer for voltage stress relief instructions.
Note: All dimensions shown are for reference only. Measurements in brackets [ ] are in metric dimensions.

Blue highlighted items are industry standard and most frequently ordered.

TYPE YS-TC

HYSPLICE™

In-line Splice Kits for Telecommunications Applications

YS-TC kits are for splicing cables and covering the connection with clear heat shrink. Splices are constructed from seamless, high conductivity electrolytic copper tubing for maximum conductivity and tin-plated to resist corrosion. Each YS-TC splice is provided with inspection holes and cable stops. The YS-TC family also features the BURNDY® color code system.

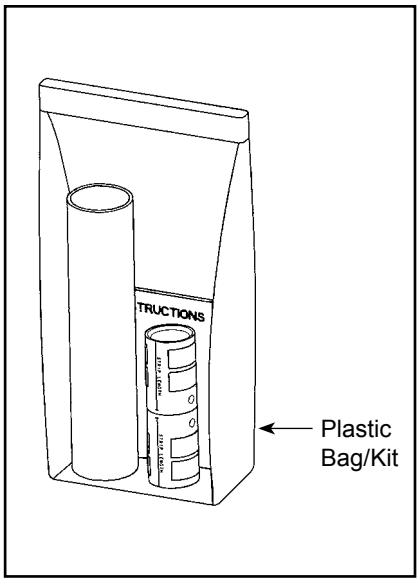

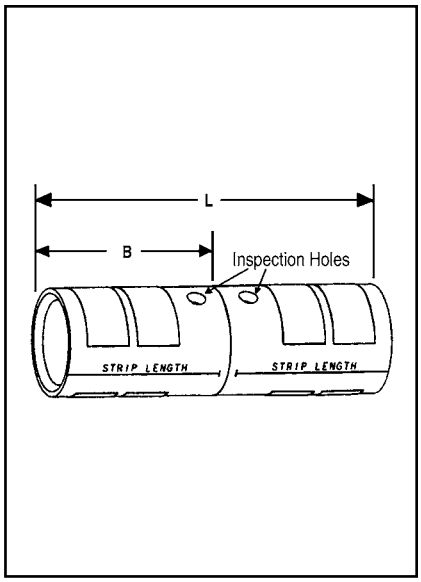

* Clear Heat Shrink Kit Catalog Number	Wire Size		Connector					Wire Strip Length
			Barrel Type	Dimensions		Color Code	Die Index	
				Barrel B	Length L			
	AWG	mm²						
YS44FXLTCKITC	750 kcmil Flex	500 mm² Class 5	Standard	1.90	4.30	Yellow	L115	1.96
YS39LTCKITC	750 kcmil Code	—	Standard	1.62	3.68	Black	23	1.67
YS38FXLTCKITC	500 kcmil Flex	300 mm² Class 5	Standard	1.71	3.87	Pink	L99	1.77
YS34LTCKITC	500 kcmil Code	240 mm² Class 2	Standard	1.56	3.51	Brown	20	1.60
YS34FXLTCKITC	350 kcmil Flex	240 mm² Class 2	Standard	1.56	3.51	Blue	19 or L80	1.60
YS31LTCKITC	350 kcmil Code	185 mm² Class 2	Standard	1.39	3.10	Red	17	1.42
YS29FXLTCKITC	4/0 AWG Flex	—	Standard	1.36	2.98	Yellow	16	1.38
YS28LTCKITC	4/0 AWG Code	—	Standard	1.23	2.69	Purple	15	1.24
YS26LTCKITC	2/0 AWG Code	70 mm²	Standard	1.16	2.62	Black	13	1.10
YS26FXLTCKITC	2/0 AWG Flex or Code	70 mm² Class 5	Standard	1.09	2.41	Black	13	1.10
YS25LTCKITC	1/0 AWG Code	—	Standard	1.04	2.37	Pink	12	1.00
YS25FXLTCKITC	1/0 AWG Flex or Code	50 mm² Class 5	Standard	1.04	2.18	Pink	12	1.00
YS2CLTCKITC	#2 AWG Code	35 mm² Class 5	Standard	0.82	1.88	Brown	10	0.78
YS2CFXLTCKITC	#2 AWG Flex or Code	35 mm² Class 5	Standard	0.82	1.73	Brown	10	0.78
YS4CFXLTCKITC	#4 AWG Flex or Code	—	Standard	0.74	1.69	Gray	8	0.71
YS6CFXLTCKITC	#6 AWG Flex or Code	16 mm² Class 5 or Class 2	Standard	0.73	1.60	Blue	7 or 24	0.70
YS8CFXLTCKITC	#8 AWG Flex or Code	—	Standard	0.65	1.48	Red	49	0.62

* **Clear** Heatshrink – UL224 VW1 Listed – passes TELCORDIA GR-347-CORE Abrasion and Cut Test. (Up to 750 kcmil Class B code cable. Contact factory for 750 flex cable applications.)

Note: All dimensions shown are for reference only.

Blue highlighted items are industry standard and most frequently ordered.

TYPE YSR-TC

HYREDUCER™

In-line Reducer Splice Kits for Telecommunications Applications

YSR-TC reducing splice kits provide for splicing two different cable sizes with inspection holes. The larger conductor is inserted first and butts against the center of the connector where the smaller barrel begins. Constructed from seamless, high conductivity electrolytic copper tubing for maximum conductivity and tin plated to resist corrosion. The YSR-TC family also features the BURNDY® color code system.

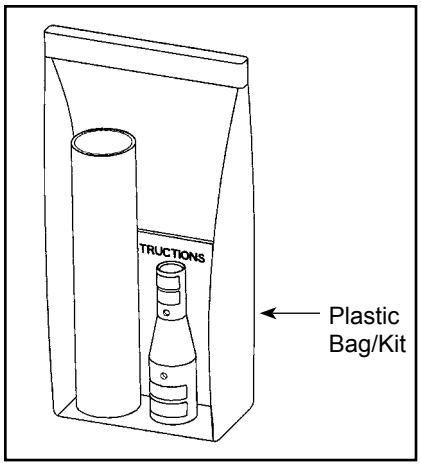

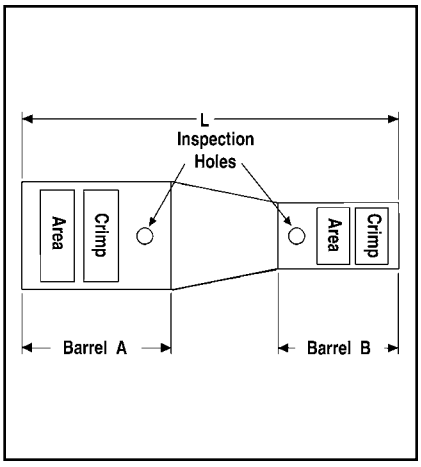

**Clear Heat Shrink Kit Catalog Number	Wire Size				Connector									Wire Strip Length	
	Barrel A		Barrel B			Dimensions			Color Code		Die Index				
	AWG	mm²	AWG	mm²	Barrel Type	Barrel A	Barrel B	L	Barrel A	Barrel B	Barrel A	Barrel B		Barrel A	Barrel B
YSR44FX39LTCKITC	750 kcmil Flex	500 mm² Class 5	750 kcmil Code	—	Standard	2.09	1.78	4.38	Yellow	Black	L115	24		1.96	1.67
YSR44FX38FXLTCKITC			500 kcmil Flex	300 mm²		2.09	1.60	4.61		Pink		L99			1.77
YSR44FX34LTCKITC			500 kcmil Code	240 mm²		2.09	1.69	4.91		Brown		20			1.60
YSR44FX34FXLTCKITC			350 kcmil Flex	240 mm²		2.09	1.69	4.91		Blue		19 or L80			I.60
YSR44FX31LTCKITC			350 kcmil Code	185 mm²		2.09	1.49	5.18		Red		18			I.41
YSR44FX30LTCKITC			300 kcmil Code	150 mm²		2.09	1.30	5.01		White		17 or 298			1.24
YSR44FX29FXLTCKITC †			4/0 AWG Flex	120 mm²		2.09	1.44	5.33		Yellow		16			I.38
YSR44FX28FXLTCKITC †			4/0 AWG Flex or Telco Flex	120 mm²		2.09	1.43	5.46		Purple		15			1.36
YSR44FX29LTCKITC †			250 kcmil Code	—		2.09	1.44	5.53		Yellow		16			1.38
YSR44FX28LTCKITC †			4/0 AWG Code	—		1.78	1.30	5.27		Purple		15			1.24
YSR3939LTCKITC	750 kcmil Code	—	750 kcmil Code	—		1.78	1.78	4.13	Black	Black	24	24		1.67	1.67
YSR3938FXLTCKITC			500 kcmil Flex	300 mm²		1.78	1.88	3.79		Pink		L99			1.77
YSR3934LTCKITC			500 kcmil Code	240 mm²		1.78	1.69	4.09		Brown		20			1.60
YSR3934FXLTCKITC			350 kcmil Flex	240 mm²		1.78	1.69	4.09		Blue		19 or L80			1.60
YSR3931LTCKITC			350 kcmil Code	185 mm²		1.78	1.49	4.36		Red		18			1.41
YSR3930LTCKITC			300 kcmil Code	150 mm²		1.78	1.30	4.23		White		17 or 298			1.24
YSR3929LTCKITC †			250 kcmil Code	—		1.78	1.44	4.71		Yellow		16			1.38
YSR3929FXLTCKITC			4/0 AWG Flex	120 mm²		1.78	1.44	4.59		Yellow		16			1.38
YSR3928FXLTCKITC †			4/0 AWG Flex or Telco Flex	120 mm²		1.78	1.43	4.64		Purple		15			1.36
YSR3928LTCKITC †			4/0 AWG Code	—		1.78	1.30	4.65		Purple					1.24
YSR38FX34LTCKITC	500 kcmil Flex	300 mm²	500 kcmil Code	240 mm²		1.88	1.69	4.06	Pink	Brown	L99	20		1.77	1.60
YSR38FX34FXLTCKITC			350 kcmil Flex	240 mm²		1.88	1.69	4.06		Blue		19 or L80			

† Provided with 2 heat shrink tubings. One will overlap the other. Install the smaller first and larger second.

** Clear Heatshrink – UL224 VW1 Listed – passes TELCORDIA GR-347-CORE Abrasion and Cut Test. (Up to 750 kcmil Class B code cable. Contact factory for 750 flex cable applications.)

Note 1: All dimensions shown are for reference only.
Note 2: Non-inspection window versions are available. Please contact customer service.
Note 3: Installation Tooling Charts on pages C-94 - C-99.

Blue highlighted items are industry standard and most frequently ordered.

TYPE YSR-TC

HYREDUCER™
(Continued)

In-line Reducer Splice Kits for Telecommunications Applications

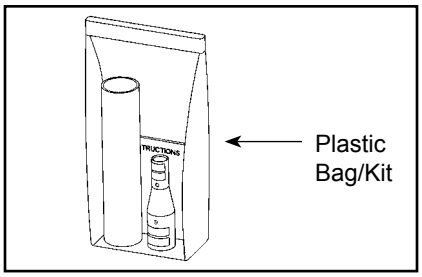

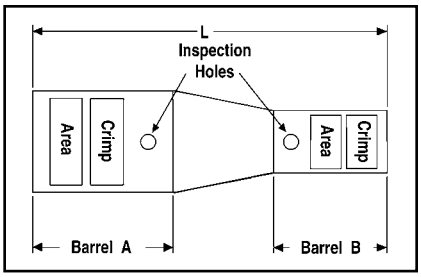

**Clear Heat Shrink Kit Catalog Number	Wire Size				Connector								Wire Strip Length	
	Barrel A		Barrel B			Dimensions			Color Code		Die Index			
	AWG	mm²	AWG	mm²	Barrel Type	Barrel A	Barrel B	L	Barrel A	Barrel B	Barrel A	Barrel B	Barrel A	Barrel B
YSR38FX31LTCKITC	500 kcmil Flex	300 mm²	350 kcmil Code	185 mm²	Standard	1.88	1.49	4.33	Pink	Red	L99	18	1.77	1.41
YSR38FX30LTCKITC			300 kcmil Code	150 mm²		1.88	1.30	4.2		White		17 or 298		1.24
YSR38FX29LTCKITC †			250 kcmil Code	—		1.88	1.44	4.67		Yellow		16		1.38
YSR38FX29FXLTCKITC †			4/0 AWG FLEX-CLASS I,K,M	120 mm²		1.88	1.44	4.48		Yellow		16		1.38
YSR38FX28FXLTCKITC †			4/0 AWG FLEX			1.88	1.43	4.6		Purple		15		1.36
YSR38FX28LTCKITC †			4/0 AWG Str.	—		1.88	1.30	4.62		Purple		15		1.24
YSR38FX26FXLTCKITC †			2/0 AWG FLEX-Str.	70 mm² Class 5		1.88	1.13	4.62		Black		13		1.09
YSR3434FXLTCKITC	500 kcmil Code	240 mm²	350 kcmil Flex	240 mm²		1.69	1.69	3.51	Brown	Blue	20	19 or L80	1.60	1.60
YSR3431LTCKITC			350 kcmil Code	185 mm²		1.69	1.49	3.66		Red		18		1.41
YSR3429FXLTCKITC			4/0 AWG Flex	120 mm²		1.69	1.44	3.81		Yellow		16		1.38
YSR3428FXLTCKITC			4/0 AWG Flex or Telco Flex			1.69	1.43	3.93		Purple		15		1.36
YSR3428LTCKITC			4/0 AWG Code	—		1.69	1.30	3.95		Purple				1.24
YSR3426FXLTCKITC †			2/0 AWG Flex- Str.	70 mm² Str.-Flex		1.69	1.13	4.01		Black		13		1.09
YSR3425FXLTCKITC †			1/0 AWG Flex- Str.	50 mm²		1.69	1.04	4.01		Pink		12		1.00
YSR34FX31LTCKITC	350 kcmil Flex	240 mm²	350 kcmil Code	185 mm²		1.69	1.49	3.63	Blue	Red	19 or L80	18	1.60	1.41
YSR34FX29FXLTCKITC			4/0 AWG Flex	120 mm²		1.69	1.44	3.81		Yellow		16		1.38
YSR34FX28FXLTCKITC						1.69	1.43	3.86		Purple		15		1.36
YSR34FX28LTCKITC			4/0 AWG Code	—		1.69	1.30	3.95						1.24
YSR34FX26FXLTCKITC			2/0 AWG Flex or Code	70 mm² Class 5		1.69	1.13	3.94		Black		13		1.09
YSR34FX25FXLTCKITC			1/0 AWG Flex or Code	50 mm²		1.69	1.04	4.01		Pink		12		1.00
YSR34FX2CFXLTCKITC			#2 AWG Flex or Code	35 mm²		1.69	0.82	4.02		Brown		10		0.78
YSR34FX4CFXLTCKITC† †			#4 AWG Flex or Code	—		1.69	0.74	4.11		Gray		8		0.71
YSR34FX6CFXLTCKITC† †			#6 AWG Flex or Code	16 mm²		1.69	0.73	4.26		Blue		7		0.70
YSR32FX29FXLTCKITC	300 kcmil Flex	185 mm² Class 2	4/0 AWG Flex	120 mm²		1.57	1.44	3.50	Red	Yellow	19 or L80	16	1.48	1.38
YSR32FX28FXLTCKITC			4/0 AWG Flex or Telco Flex			1.57	1.43	3.46		Purple		15		1.36
YSR3129FXLTCKITC	350 kcmil Code	185 mm² Class 2	4/0 AWG Code			1.49	1.44	3.13		Yellow	18	16	1.41	1.38
YSR3128FXLTCKITC			4/0 AWG Flex or Telco Flex			1.49	1.43	3.25		Purple	19 or L80	15		1.36

† Provided with 2 heat shrink tubings. One will overlap the other. Install the smaller first and larger second.

† † Provided with 4 heat shrink tubings. Install the smaller first and continue with the next size.

** Clear Heatshrink – UL224 VW1 Listed – passes TELCORDIA GR-347-CORE Abrasion and Cut Test. (Up to 750 kcmil Class B code cable. Contact factory for 750 flex cable applications.)

Note 1: All dimensions shown are for reference only.
Note 2: Non-inspection window versions are available. Please contact customer service.
Note 3: Installation Tooling Charts on pages C-94 - C-99.

Blue highlighted items are industry standard and most frequently ordered.

TYPE YSR-TC

HYREDUCER™
(Continued)

In-line Reducer Splice Kits for Telecommunications Applications

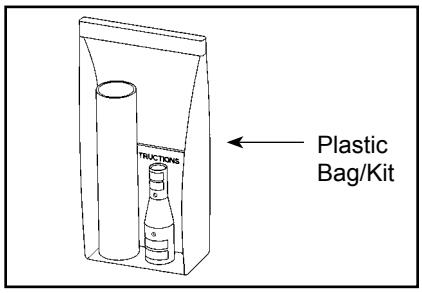

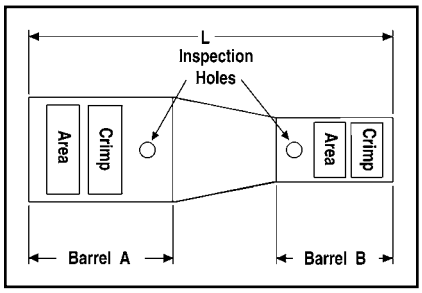

**Clear Heat Shrink Kit Catalog Number	Wire Size				Connector								Wire Strip Length	
	Barrel A		Barrel B			Dimensions			Color Code		Die Index			
	AWG	mm²	AWG	mm²	Barrel Type	Barrel A	Barrel B	L	Barrel A	Barrel B	Barrel A	Barrel B	Barrel A	Barrel B
YSR3128LTCKITC	350 kcmil Code	185 mm² Class 2	4/0 AWG Code	—	Standard	1.49	1.30	3.27	Red	Purple	18	15	1.41	1.24
YSR3126FXLTCKITC			2/0 AWG Flex or Code	70 mm² Class 5		1.49	1.16	3.24	Red	Black	18	13	1.41	1.10
YSR3125FXLTCKITC			1/0 AWG Flex or Code	50 mm²		1.49	1.04	3.33	Red	Pink	18	12	1.41	1.00
YSR312CFXLTCKITC			#2 AWG Flex or Code	35 mm²		1.49	0.82	3.37	Red	Brown	18	10	1.41	0.78
YSR314CFXLTCKITC †			#4 AWG Flex or Code	—		1.49	0.74	3.43	Red	Gray	18	8	1.41	0.71
YSR316CFXLTCKITC †			#6 AWG Flex or Code	16 mm²		1.49	0.73	3.58	Red	Blue	18	7	1.41	0.70
YSR29FX28LTCKITC	4/0 AWG Flex	120 mm²	4/0 AWG Code	—		1.44	1.30	3.00	Yellow	Purple	16	15	1.38	1.24
YSR29FX25FXLTCKITC			1/0 AWG Flex or Code	50 mm²		1.44	1.04	3.10	Yellow	Pink	16	12	1.38	1.00
YSR29FX2CFXLTCKITC			#2 AWG Flex or Code	35 mm²		1.44	0.82	3.13	Yellow	Brown	16	10	1.38	0.78
YSR28FX28LTCKITC	4/0 AWG Flex or Telco Flex	120 mm²	4/0 AWG Code	—		1.43	1.43	3.00	Purple	Purple	15	15	1.36	1.24
YSR28FX26FXLTCKITC			2/0 AWG Flex or Code	70 mm² Class 5		1.43	1.13	2.94	Purple	Black	15	13	1.36	1.19
YSR28FX25FXLTCKITC			1/0 AWG Flex or Code	50 mm²		1.43	1.04	3.07	Purple	Pink	15	12	1.36	1.00
YSR28FX2CFXLTCKITC			#2 AWG Flex or Code	35 mm²		1.43	0.82	3.11	Purple	Brown	15	10	1.36	0.78
YSR28FX4CFXLTCKITC †			#4 AWG Flex or Code	—		1.43	0.74	3.10	Purple	Gray	15	8	1.36	0.71
YSR2825FXLTCKITC	4/0 AWG Code	—	1/0 AWG Flex or Code	50 mm²		1.30	1.04	2.66	Purple	Pink	15	12	1.24	1.00
YSR282CFXLTCKITC			#2 AWG Flex or Code	35 mm²		1.30	0.82	2.7	Purple	Brown	15	10	1.24	0.78
YSR284CFXLTCKITC †			#4 AWG Flex or Code	—		1.30	0.74	2.69	Purple	Gray	15	8	1.24	0.71
YSR286CFXLTCKITC †			#6 AWG Flex or Code	16 mm²		1.30	0.73	2.99	Purple	Blue	15	7	1.24	0.70
YSR26FX25FXLTCKITC	2/0 AWG Flex or Code	70 mm²	1/0 AWG Flex or Code	50 mm²		1.16	1.04	2.36	Black	Pink	13	12	1.10	1.00
YSR26FX2CFXLTCKITC			#2 AWG Flex or Code	35 mm²		1.16	0.82	2.41	Black	Brown	13	10	1.10	0.78
YSR26FX4CFXLTCKITC †			#4 AWG Flex or Code	—		1.16	0.74	2.47	Black	Gray	13	8	1.10	0.71
YSR26FX6CFXLTCKITC †			#6 AWG Flex or Code	16 mm²		1.16	0.73	2.71	Black	Blue	13	7	1.10	0.70

† Provided with 2 heat shrink tubings. One will overlap the other. Install the smaller first and larger second.

** Clear Heatshrink – UL224 VW1 Listed – passes TELCORDIA GR-347-CORE Abrasion and Cut Test. (Up to 750 kcmil Class B code cable. Contact factory for 750 flex cable applications.)

Note 1: All dimensions shown are for reference only.
Note 2: Non-inspection window versions are available. Please contact customer service.
Note 3: Installation Tooling Charts on pages C-94 - C-99.

Blue highlighted items are industry standard and most frequently ordered.

TYPE YSR-TC

HYREDUCER™ (Continued)

In-line Reducer Splice Kits for Telecommunications Applications

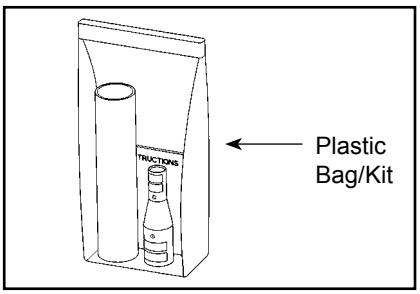

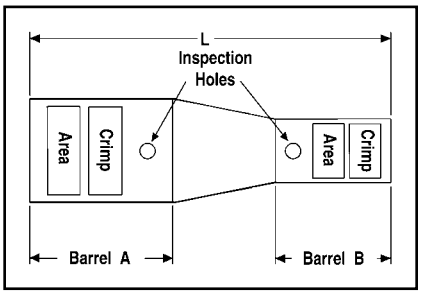

**Clear Heat Shrink Kit Catalog Number	Wire Size				Connector								Wire Strip Length	
	Barrel A		Barrel B			Dimensions			Color Code		Die Index			
	AWG	mm²	AWG	mm²	Barrel Type	Barrel A	Barrel B	L	Barrel A	Barrel B	Barrel A	Barrel B	Barrel A	Barrel B
YSR25FX2CFXLTCKITC	1/0 AWG Flex or Code	50 mm²	#2 AWG Flex or Code	35 mm²	Standard	1.04	0.82	2.12	Pink	Brown	12	10	1.00	0.76
YSR25FX4CFXLTCKITC †			#4 AWG Flex or Code	—		1.04	0.74	2.18	Pink	Gray	12	8	1.00	0.62
YSR25FX6CFXLTCKITC †			#6 AWG Flex or Code	16 mm²		1.04	0.73	2.42	Pink	Blue	12	7	1.00	0.61
YSR25FX8CFXLTCKITC †			#8 AWG Flex- Str., #6 Sol	10 mm² Str.-Flex		1.04	0.63	2.51	Pink	Red	12	49	1.01	0.60
YSR2CFX4CFXLTCKITC	#2 AWG Flex or Code	35 mm²	#4 AWG Flex or Code	—		0.82	0.74	1.79	Brown	Gray	10	8	0.78	0.63
YSR2CFX6CFXLTCKITC			#6 AWG Flex or Code	16 mm²		0.82	0.73	1.96	Brown	Blue	10	7	0.78	0.61
YSR2CFX8CFXLTCKITC			#8 AWG Flex or Code	10 mm²		0.82	0.60	1.79	Brown	Red	10	49	0.78	0.60
YSR4CFX6CFXLTCKITC	#4 AWG Flex or Code	—	#6 AWG Flex or Code	16 mm²		0.74	0.73	1.67	Gray	Blue	8	7	0.71	0.61
YSR4CFX8CFXLTCKITC			#8 AWG Flex or Code	10 mm²		0.74	0.60	1.50	Gray	Red	8	49	0.71	0.60
YSR4CFX10CLTCKITC			#10 AWG Flex or Code	6 mm² Str. or 2.5 mm² Flex		0.74	0.66	1.66	Gray	—	8	—	0.71	0.65
YSR6CFX8CFXLTCKITC	#6 AWG Flex or Code	16 mm²	#8 AWG Flex or Code	10 mm²		0.73	0.60	1.37	Blue	Red	7	49	0.70	0.57
YSR6CFX10CLTCKITC			#10 AWG Flex or Code	6 mm² Str. or 2.5 mm² Flex		0.73	0.66	1.53	Blue	—	7	—	0.70	0.63
YSR6CFX14CLTCKITC			#14 - 10 Flex - Str., #12-10 Sol			0.73	0.66	1.53	Blue	—	7	—	0.70	0.63
YSR8CFX10CLTCKITC	#8 AWG Flex or Code	10 mm²	#10 AWG Flex or Code	6 mm² Str. or 2.5 mm² Flex		0.60	0.66	1.41	Red	—	49	—	0.57	0.63
YSR8CFX14CLTCKITC			#14 AWG Flex or Code			0.60	0.66	1.41	Red	—	49	—	0.57	0.63
YSR10CFX12CLTCKITC	#14-10 Flex-Str. #12-10 Sol.	6 mm² Str. or 2.5 mm² Flex	#12 AWG Flex or Code	6 mm² Str. or 2.5 mm² Flex		0.66	0.66	1.45	—	—	—	—	0.63	0.63
YSR10CFX14CLTCKITC			#14 AWG Flex or Code			0.66	0.66	1.45	—	—	—	—	0.63	0.63

† Provided with 2 heat shrink tubings. One will overlap the other. Install the smaller first and larger second.

** Clear Heatshrink – UL224 VW1 Listed – passes TELCORDIA GR-347-CORE Abrasion and Cut Test. (Up to 750 kcmil Class B code cable. Contact factory for 750 flex cable applications.)

Note 1: All dimensions shown are for reference only.
Note 2: Non-inspection window versions are available. Please contact customer service.
Note 3: Installation Tooling Charts on pages C-94 - C-99.

Blue highlighted items are industry standard and most frequently ordered.

TYPE YSR-TC

INSTALLATION TOOLING CHART

In-line Reducer Splice Kits for Telecommunications Applications

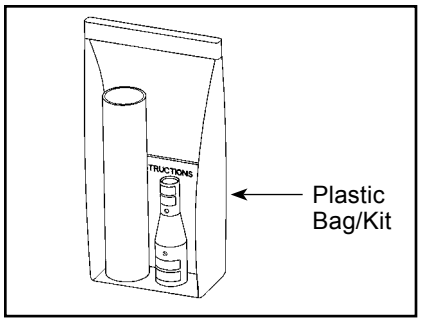

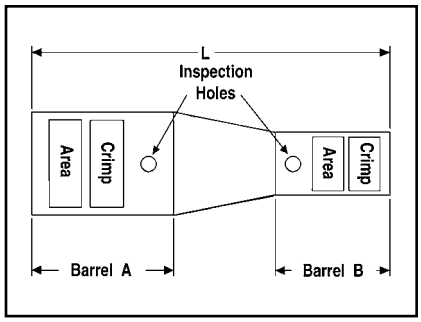

Installation Tooling																	
** Clear Heat Shrink Kit Catalog Number	Wire Range				Color Code		Die Index		Hydraulic Y750, Y35, Y46, PAT750, BAT750		Hydraulic BCT500HS, Y500CTHS		Mechanical OUR840, MD7-34		Dieless Y/PAT644XT-18V Series, MY29-11	
	Barrel A		Barrel B													
	AWG	mm²	AWG	mm²	Barrel A	Barrel B	Barrel A	Barrel B	Barrel A	Barrel B	Barrel A	Barrel B	Barrel A	Barrel B	Barrel A	Barrel B
YSR44FX39LTCKITC	750 kcmil Flex	500 mm² Class 5	750 kcmil Code	—	Yellow	Black	L115	24	U44XRT (2)	U39RT (2) P39RT (2)	—	—	—	—	Y644HSXT (1) PAT644XT-18V (1)	Y644HSXT (1) PAT644XT-18V (1)
YSR44FX38FXLTCKITC			500 kcmil Flex	300 mm²	Yellow	Pink	L115	L99	U44XRT (2)	U38XRT (2)	—	—	—	—	Y644HSXT (1) PAT644XT-18V (1)	Y644HSXT (1) PAT644XT-18V (1)
YSR44FX34LTCKITC			500 kcmil Code	240 mm²	Yellow	Brown	L115	20	U44XRT (2)	U34RT (2) U31ART (2)	—	W34VT (2) W34RT (2)	—	W34VT (2) W34RT (2)	Y644HSXT (1), PAT644XT-18V (1)	Y644HSXT (1), PAT644XT-18V (1)
YSR44FX34FXLTCKITC			350 kcmil Flex	240 mm²	Yellow	Blue	L115	19 or L80	U44XRT (2)	U32RT (2)	—	W32VT (2) W32RT (2)	—	W32VT (2) W32RT (2)	Y644HSXT (1), PAT644XT-18V (1)	Y644HSXT (1), PAT644XT-18V (1)
YSR44FX31LTCKITC			350 kcmil Code	185 mm²	Yellow	Red	L115	18	U44XRT (2)	U31RT (2)	—	W31VT (2) W31RT (2)	—	W31VT (2) W31RT (2)	Y644HSXT (1), PAT644XT-18V (1)	Y644HSXT (1), PAT644XT-18V (1)
YSR44FX30LTCKITC			300 kcmil Code	150 mm²	Yellow	White	L115	17 or 298	U44XRT (2)	U30RT (2)	—	W30VT (2) W30RT (2)	—	W30VT (2) W30RT (2)	Y644HSXT (1), PAT644XT-18V (1)	Y644HSXT (1), PAT644XT-18V (1)
YSR44FX29LTCKITC †			250 kcmil Code	—	Yellow	Yellow	L115	16	U44XRT (2)	U29RT (1)	—	W29VT (2) W29RT (2) X29RT (4)	—	W29VT (2) X29RT (4)	Y644HSXT (1), PAT644XT-18V (1)	Y644HSXT (1), PAT644XT-18V (1)
YSR44FX29FXLTCKITC †			4/0 AWG Flex	120 mm²	Yellow	Yellow	L115	16	U44XRT (2)	U29RT (1)	—	W29VT (2) W29RT (2) X29RT (4)	—	W29VT (2) W29RT (2) X29RT (4)	Y644HSXT (1), PAT644XT-18V (1)	Y644HSXT (1), PAT644XT-18V (1)
YSR44FX28FXLTCKITC †			4/0 AWG Flex or Telco Flex	120 mm²	Yellow	Purple	L115	15	U44XRT (2)	U28RT (1)	—	W28VT (2) W28RT (2) X28RT (3)	—	W28VT (2) W28RT (2) X28RT (3)	Y644HSXT (1), PAT644XT-18V (1)	Y644HSXT (1), PAT644XT-18V (1)
YSR44FX28LTCKITC †			4/0 AWG Code	—	Yellow	Purple	L115	15	U44XRT (2)	U28RT (1)	—	W28VT (2) W28RT (2) X28RT (3)	—	W28VT (2) W28RT (2) X28RT (3)	Y644HSXT (1), PAT644XT-18V (1)	MY29-11 (1), Y644HSXT (1), MRC840 (2) PAT644XT-18V (1)
YSR3939LTCKITC	750 kcmil Code	—	750 kcmil Code	—	Black	Black	24	24	U39RT (2) P39RT (2)	U39RT (2) P39RT (2)	—	—	—	—	Y644HSXT (1), PAT644XT-18V (1)	Y644HSXT (1), PAT644XT-18V (1)
YSR3938FXLTCKITC			500 kcmil Flex	300 mm²	Black	Pink	24	L99	U39RT (2) P39RT (2)	U38XRT (2)	—	—	—	—	Y644HSXT (1), PAT644XT-18V (1)	Y644HSXT (1), PAT644XT-18V (1)
YSR3934LTCKITC			500 kcmil Code	240 mm²	Black	Brown	24	20	U39RT (2) P39RT (2)	U34RT (2) U31ART (2)	—	W34VT (2) W34RT (2)	—	W34VT (2) W34RT (2)	Y644HSXT (1), PAT644XT-18V (1)	Y644HSXT (1), PAT644XT-18V (1)
YSR3934FXLTCKITC			350 kcmil Flex	240 mm²	Black	Blue	24	19 or L80	U39RT (2) P39RT (2)	U32RT (2)	—	W32VT (2) W32RT (2)	—	W32VT (2) W32RT (2)	Y644HSXT (1), PAT644XT-18V (1)	Y644HSXT (1), PAT644XT-18V (1)
YSR3931LTCKITC			350 kcmil Code	185 mm²	Black	Red	24	18	U39RT (2) P39RT (2)	U31RT (2)	—	W31VT (2) W31RT (2)	—	W31VT (2) W31RT (2)	Y644HSXT (1), PAT644XT-18V (1)	Y644HSXT (1), PAT644XT-18V (1)
YSR3930LTCKITC			300 kcmil Code	150 mm²	Black	White	24	17 or 298	U39RT (2) P39RT (2)	U30RT (2)	—	W30VT (2) W30RT (2)	—	W30VT (2) W30RT (2)	Y644HSXT (1), PAT644XT-18V (1)	Y644HSXT (1), PAT644XT-18V (1)
YSR3929LTCKITC †			250 kcmil Code	—	Black	Yellow	24	16	U39RT (2) P39RT (2)	U29RT (1)	—	W29VT (2) W29RT (2) X29RT (4)	—	W29VT (2) X29RT (4)	Y644HSXT (1), PAT644XT-18V (1)	Y644HSXT (1), PAT644XT-18V (1)
YSR3929FXLTCKITC			4/0 AWG Flex	120 mm²	Black	Yellow	24	16	U39RT (2) P39RT (2)	U29RT (1)	—	W29VT (2) W29RT (2) X29RT (4)	—	W29VT (2) W29RT (2) X29RT (4)	Y644HSXT (1), PAT644XT-18V (1)	Y644HSXT (1), PAT644XT-18V (1)
YSR3928FXLTCKITC †			4/0 AWG Flex or Telco Flex	120 mm²	Black	Purple	24	15	U39RT (2) P39RT (2)	U28RT (1)	—	W28VT (2) W28RT (2) X28RT (3)	—	W28VT (2) W28RT (2) X28RT (3)	Y644HSXT (1), PAT644XT-18V (1)	Y644HSXT (1), PAT644XT-18V (1)
YSR3928LTCKITC †			4/0 AWG Code	—	Black	Purple	24	15	U39RT (2) P39RT (2)	U28RT (1)	—	W28VT (2) W28RT (2) X28RT (3)	—	W28VT (2) W28RT (2) X28RT (3)	Y644HSXT (1), PAT644XT-18V (1)	MY29-11 (1), Y644HSXT (1), PAT644XT-18V (1) MRC840 (2)

Note 1: All dimensions shown are for reference only.
Note 2: Non-inspection window versions are available. Please contact customer service.

† Provided with 2 heat shrink tubings. One will overlap the other. Install the smaller first and larger second.

** **Clear** Heatshrink – UL224 VW1 Listed – passes TELCORDIA GR-347-CORE Abrasion and Cut Test.

(Up to 750 kcmil Class B code cable. Contact factory for 750 flex cable applications.)

(Installation Tooling Chart continued on next 5 pages)

Blue highlighted items are industry standard and most frequently ordered.

TYPE YSR-TC

INSTALLATION TOOLING CHART (Continued)

In-line Reducer Splice Kits for Telecommunications Applications

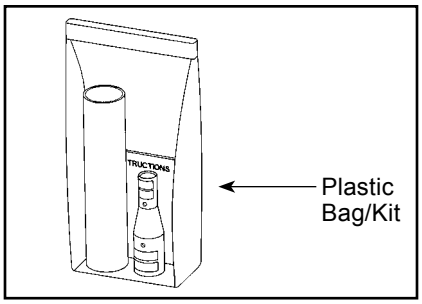

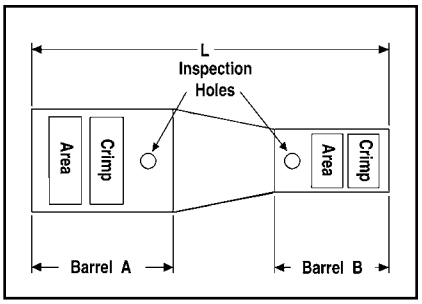

Installation Tooling																
** Clear Heat Shrink Kit Catalog Number	Wire Range				Color Code		Die Index		Hydraulic		Hydraulic		Mechanical		Dieless	
	Barrel A		Barrel B						Y750, Y35, Y46, PAT750, BAT750		BCT500HS, Y500CTHS		OUR840, MD7-34		Y/PAT644XT-18V Series, MY29-11	
	AWG	mm²	AWG	mm²	Barrel A	Barrel B	Barrel A	Barrel B	Barrel A	Barrel B	Barrel A	Barrel B	Barrel A	Barrel B	Barrel A	Barrel B
YSR38FX34LTCKITC	500 kcmil Flex	300 mm²	500 kcmil Code	240 mm²	Pink	Brown	L99	20	U38XRT (2)	U34RT (2) U31ART (2)	—	W34VT (2) W34RT (2)	—	W34VT (2) W34RT (2)	Y644HSXT (1), PAT644XT-18V (1)	Y644HSXT (1), PAT644XT-18V (1)
YSR38FX34FXLTCKITC			350 kcmil Flex	240 mm²	Pink	Blue	L99	19 or L80	U38XRT (2)	U32RT (2)	—	W32VT (2) W32RT (2)	—	W32VT (2) W32RT (2)	Y644HSXT (1), PAT644XT-18V (1)	Y644HSXT (1), PAT644XT-18V (1)
YSR38FX31LTCKITC			350 kcmil Code	185 mm²	Pink	Red	L99	18	U38XRT (2)	U31RT (2)	—	W31VT (2) W31RT (2)	—	W31VT (2) W31RT (2)	Y644HSXT (1), PAT644XT-18V (1)	Y644HSXT (1), PAT644XT-18V (1)
YSR38FX30LTCKITC			300 kcmil Code	150 mm²	Pink	White	L99	17 or 298	U38XRT (2)	U30RT (2)	—	W30VT (2) W30RT (2)	—	W30VT (2) W30RT (2)	Y644HSXT (1), PAT644XT-18V (1)	Y644HSXT (1), PAT644XT-18V (1)
YSR38FX29LTCKITC †			250 kcmil Code	—	Pink	Yellow	L99	16	U38XRT (2)	U29RT (1)	—	W29VT (2) W29RT (2) X29RT (4)	—	W29VT (2) X29RT (4)	Y644HSXT (1), PAT644XT-18V (1)	Y644HSXT (1), PAT644XT-18V (1)
YSR38FX29FXLTCKITC †			4/0 AWG Flex	120 mm²	Pink	Yellow	L99	16	U38XRT (2)	U29RT (1)	—	W29VT (2) W29RT (2) X29RT (4)	—	W29VT (2) W29RT (2) X29RT (4)	Y644HSXT (1), PAT644XT-18V (1)	Y644HSXT (1), PAT644XT-18V (1)
YSR38FX28FXLTCKITC †			4/0 AWG Flex or Telco Flex	120 mm²	Pink	Purple	L99	15	U38XRT (2)	U28RT (1)	—	W28VT (2) W28RT (2) X28RT (3)	—	W28VT (2) W28RT (2) X28RT (3)	Y644HSXT (1), PAT644XT-18V (1)	Y644HSXT (1), PAT644XT-18V (1)
YSR38FX28LTCKITC †			4/0 AWG Code	—	Pink	Purple	L99	15	U38XRT (2)	U28RT (1)	—	W28VT (2) W28RT (2) X28RT (3)	—	W28VT (2) W28RT (2) X28RT (3)	Y644HSXT (1), PAT644XT-18V (1)	MY29-11 (1), Y644HSXT (1), PAT644XT-18V (1) MRC840 (2)
YSR38FX26FXLTCKITC †			2/0 AWG Flex or Code	70 mm² Class 5	Pink	Black	L99	13	U38XRT (2)	U26RT (1)	—	W26VT (2) W26RT (2) X26RT (2)	—	W26VT (2) W26RT (2) X26RT (2)	Y644HSXT (1), PAT644XT-18V (1)	MY29-11 (1) Y644HSXT (1) PAT644XT-18V (1)
YSR3434FXLTCKITC	500 kcmil Code	240 mm²	350 kcmil Flex	240 mm²	Brown	Blue	20	19 or L80	U34RT (2) U31ART (2)	U32RT (2)	W34VT (2) W34RT (2)	W32VT (2) W32RT (2)	W34VT (2) W34RT (2)	W32VT (2) W32RT (2)	Y644HSXT (1), PAT644XT-18V (1)	Y644HSXT (1), PAT644XT-18V (1)
YSR3431LTCKITC			350 kcmil Code	185 mm²	Brown	Red	20	18	U34RT (2) U31ART (2)	U31RT (2)	W34VT (2) W34RT (2)	W31VT (2) W31RT (2)	W34VT (2) W34RT (2)	W31VT (2) W31RT (2)	Y644HSXT (1), PAT644XT-18V (1)	Y644HSXT (1), PAT644XT-18V (1)
YSR3429FXLTCKITC			4/0 AWG Flex	120 mm²	Brown	Yellow	20	16	U34RT (2) U31ART (2)	U29RT (1)	W34VT (2) W34RT (2)	W29VT (2) W29RT (2) X29RT (4)	W34VT (2) W34RT (2)	W29VT (2) W29RT (2) X29RT (4)	Y644HSXT (1), PAT644XT-18V (1)	Y644HSXT (1), PAT644XT-18V (1)
YSR3428FXLTCKITC			4/0 AWG Flex or Telco Flex	120 mm²	Brown	Purple	20	15	U34RT (2) U31ART (2)	U28RT (1)	W34VT (2) W34RT (2)	W28VT (2) W28RT (2) X28RT (3)	W34VT (2) W34RT (2)	W28VT (2) W28RT (2) X28RT (3)	Y644HSXT (1), PAT644XT-18V (1)	Y644HSXT (1), PAT644XT-18V (1)
YSR3428LTCKITC			4/0 AWG Code	—	Brown	Purple	20	15	U34RT (2) U31ART (2)	U28RT (1)	W34VT (2) W34RT (2)	W28VT (2) W28RT (2) X28RT (3)	W34VT (2) W34RT (2)	W28VT (2) W28RT (2) X28RT (3)	Y644HSXT (1), PAT644XT-18V (1)	MY29-11 (1), Y644HSXT (1), PAT644XT-18V (1) MRC840 (2)
YSR3426FXLTCKITC			2/0 AWG Flex-Str.	70 mm² Str.-Flex	Brown	Black	20	13	U34RT (2) U31ART (2)	U26RT (1)	U34VT (2) U34RT (2)	W26VT (2) W26RT (2) X26RT (2)	W34VT (2)	W26VT (2) W26RT (2) X26RT (2)	Y644HSXT (1), PAT644XT-18V (1)	MY29-11 (1), Y644HSXT (1), PAT644XT-18V (1)
YSR3425FXLTCKITC †			1/0 AWG Flex or Code	50 mm²	Brown	Pink	20	12	U34RT (2) U31ART (2)	U25RT (1)	W34VT (2) W34RT (2)	W25VT (2) W25RT (2) X25RT (2)	W34VT (2) W34RT (2)	W25VT (2) W25RT (2) X25RT (2)	Y644HSXT (1), PAT644XT-18V (1)	MY29-11 (1), Y644HSXT (1) PAT644XT-18V (1)
YSR34FX31LTCKITC	350 kcmil Flex	240 mm²	350 kcmil Code	185 mm²	Blue	Red	19 or L80	18	U32RT (2)	U31RT (2)	W32VT (2) W32RT (2)	W31VT (2) W31RT (2)	W32VT (2) W32RT (2)	W31VT (2) W31RT (2)	Y644HSXT (1), PAT644XT-18V (1)	Y644HSXT (1), PAT644XT-18V (1)
YSR34FX29FXLTCKITC			4/0 AWG Flex	120 mm²	Blue	Yellow	19 or L80	16	U32RT (2)	U29RT (1)	W32VT (2) W32RT (2)	W29VT (2) W29RT (2) X29RT (4)	W32VT (2) W32RT (2)	W29VT (2) W29RT (2) X29RT (4)	Y644HSXT (1), PAT644XT-18V (1)	Y644HSXT (1), PAT644XT-18V (1)

Note 1: All dimensions shown are for reference only.
Note 2: Non-inspection window versions are available. Please contact customer service.

† Provided with 2 heat shrink tubings. One will overlap the other. Install the smaller first and larger second.
** **Clear** Heatshrink – UL224 VW1 Listed – passes TELCORDIA GR-347-CORE Abrasion and Cut Test.

(Up to 750 kcmil Class B code cable. Contact factory for 750 flex cable applications.)

(Installation Tooling Chart continued on next 4 pages)

Blue highlighted items are industry standard and most frequently ordered.

TYPE YSR-TC

INSTALLATION TOOLING CHART (Continued)

In-line Reducer Splice Kits for Telecommunications Applications

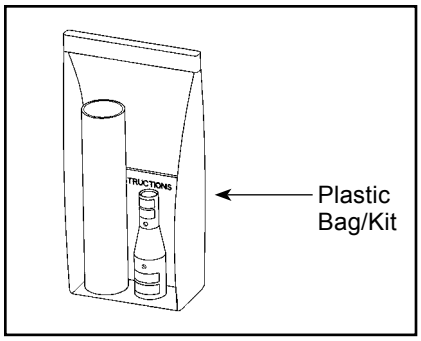

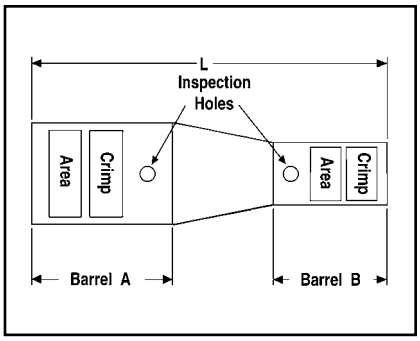

Installation Tooling																	
** Clear Heat Shrink Kit Catalog Number	Wire Range				Color Code		Die Index		Hydraulic		Hydraulic		Mechanical		Dieless	
	Barrel A		Barrel B						Y750, Y35, Y46, PAT750, BAT750		BCT500HS, Y500CTHS		OUR840, MD7-34		Y/PAT644XT-18V Series, MY29-11	
	AWG	mm²	AWG	mm²	Barrel A	Barrel B	Barrel A	Barrel B	Barrel A	Barrel B	Barrel A	Barrel B	Barrel A	Barrel B	Barrel A	Barrel B
YSR34FX28FXLTCKITC	350 kcmil Flex	240 mm²	4/0 AWG Flex or Telco Flex	120 mm²	Blue	Purple	19 or L80	15	U32RT (2)	U28RT (1)	W32VT (2) W32RT (2)	W28VT (2) W28RT (2) X28RT (3)	W32VT (2) W32RT (2)	W28VT (2) W28RT (2) X28RT (3)	Y644HSXT (1), PAT644XT-18V (1)	Y644HSXT (1), PAT644XT-18V (1)
YSR34FX28LTCKITC			4/0 AWG Code	—	Blue	Purple	19 or L80	15	U32RT (2)	U28RT (1)	W32VT (2) W32RT (2)	W28VT (2) W28RT (2) X28RT (3)	W32VT (2) W32RT (2)	W28VT (2) W28RT (2) X28RT (3)	Y644HSXT (1), PAT644XT-18V (1)	MY29-11 (1), Y644HSXT (1), PAT644XT-18V (1) MRC840 (2)
YSR34FX26FXLTCKITC			2/0 AWG Flex or Code	70 mm² Class 5	Blue	Black	19 or L80	13	U32RT (2)	U26RT (1)	W32VT (2) W32RT (2)	W26VT (2) W26RT (2) X26RT (2)	W32VT (2) W32RT (2)	W26VT (2) W26RT (2) X26RT (2)	Y644HSXT (1), PAT644XT-18V (1)	MY29-11 (1), Y644HSXT (1) PAT644XT-18V (1)
YSR34FX25FXLTCKITC			1/0 AWG Flex or Code	50 mm²	Blue	Pink	19 or L80	12	U32RT (2)	U25RT (1) U2CABT (1)	W32VT (2) W32RT (2)	W25VT (2) W25RT (2) X25RT (2)	W32VT (2) W32RT (2)	W25VT (2) W25RT (2) X25RT (2)	Y644HSXT (1), PAT644XT-18V (1)	MY29-11 (1), Y644HSXT (1) PAT644XT-18V (1)
YSR34FX2CFXLTCKITC			#2 AWG Flex or Code	35 mm²	Blue	Brown	19 or L80	10	U32RT (2)	U2CRT (1)	W32VT (2) W32RT (2)	W2CVT (1) W2CRT (1) X2CRT (1)	W32VT (2) W32RT (2)	W2CVT (1) W2CRT (1) X2CRT (1)	Y644HSXT (1), PAT644XT-18V (1)	Y1MRTC (2), MY29-11 (1), Y644HSXT (1) PAT644XT-18V (1)
YSR34FX4CFXLTCKITC ††			#4 AWG Flex or Code	—	Blue	Gray	19 or L80	8	U32RT (2)	U4CRT (1)	W32VT (2) W32RT (2)	W4CVT (1) W4CRT (1) X4CRT (1)	W32VT (2) W32RT (2)	W4CVT (1) W4CRT (1) X4CRT (1)	Y644HSXT (1), PAT644XT-18V (1)	Y1MRTC (2), MY29-11 (1), Y644HSXT (1) PAT644XT-18V (1)
YSR34FX6CFXLTCKITC ††			#6 AWG Flex or Code	16 mm²	Blue	Blue	19 or L80	7	U32RT (2)	U5CRT (1)	W32VT (2) W32RT (2)	W5CVT (1) W5CRT (1) X5CRT (1)	W32VT (2) W32RT (2)	W5CVT (1) W5CRT (1) X5CRT (1)	Y644HSXT (1), PAT644XT-18V (1)	Y1MRTC (2), MY29-11 (1), Y644HSXT (1) PAT644XT-18V (1)
YSR32FX29FXLTCKITC	300 kcmil Flex	185 mm² Class 2	4/0 AWG Flex	120 mm²	Red	Yellow	19 or L80	16	U31RT (2)	U29RT (1)	W31VT (2) W31RT (2)	W29VT (2) W29RT (2) X29RT (4)	W31VT (2) W31RT (2)	W29VT (2) W29RT (2) X29RT (4)	Y644HSXT (1), PAT644XT-18V (1)	Y644HSXT (1), PAT644XT-18V (1)
YSR32FX28FXLTCKITC			4/0 AWG Flex or Telco Flex	120 mm²	Red	Purple	19 or L80	15	U31RT (2)	U28RT (1)	W31VT (2) W31RT (2)	W28VT (2) W28RT (2) X28RT (3)	W31VT (2) W31RT (2)	W28VT (2) W28RT (2) X28RT (3)	Y644HSXT (1), PAT644XT-18V (1)	MY29-11 (1), Y644HSXT (1), PAT644XT-18V (1) MRC840 (2)
YSR3129FXLTCKITC	350 kcmil Code	185 mm² Class 2	4/0 AWG Flex	120 mm²	Red	Yellow	18	16	U31RT (2)	U29RT (1)	W31VT (2)	W29RT (2) W31RT (2)	W29VT (2) W31VT (2) X29RT (4)	W29VT (2) W29RT (2) X29RT (4)	Y644HSXT (1), PAT644XT-18V (1)	Y644HSXT (1), PAT644XT-18V (1)
YSR3128FXLTCKITC			4/0 AWG Flex or Telco Flex	120 mm²	Red	Purple	18	15	U31RT (2)	U28RT (1)	W31VT (2) W31RT (2)	W28VT (2) W28RT (2) X28RT (3)	W31VT (2)	W28VT (2) W28RT (2) X28RT (3)	Y644HSXT (1), PAT644XT-18V (1)	Y644HSXT (1), PAT644XT-18V (1)
YSR3128LTCKITC			4/0 AWG Code	—	Red	Purple	18	15	U31RT (2)	U28RT (1)	W31VT (2) W31RT (2)	W28VT (2) W28RT (2) X28RT (3)	W31VT (2)	W28VT (2) W28RT (2) X28RT (3)	Y644HSXT (1), PAT644XT-18V (1)	MY29-11 (1), Y644HSXT (1), MRC840 (2) PAT644XT-18V (1)

Note 1: All dimensions shown are for reference only.
Note 2: Non-inspection window versions are available. Please contact customer service.

† Provided with 2 heat shrink tubings. One will overlap the other. Install the smaller first and larger second.
** **Clear** Heatshrink – UL224 VW1 Listed – passes TELCORDIA GR-347-CORE Abrasion and Cut Test.

(Up to 750 kcmil Class B code cable. Contact factory for 750 flex cable applications.)

(Installation Tooling Chart continued on next 3 pages)

Blue highlighted items are industry standard and most frequently ordered.

TYPE YSR-TC

INSTALLATION TOOLING CHART (Continued)

In-line Reducer Splice Kits for Telecommunications Applications

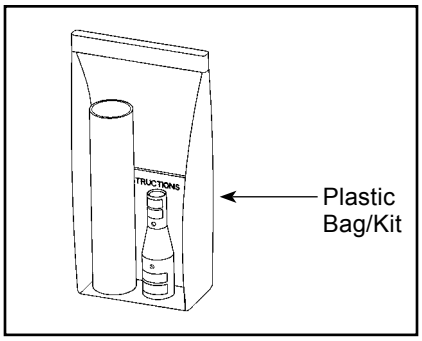

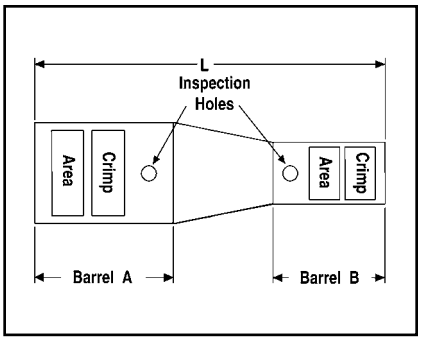

Installation Tooling																	
** Clear Heat Shrink Kit Catalog Number	Wire Range				Color Code		Die Index		Hydraulic		Hydraulic		Mechanical		Dieless	
	Barrel A		Barrel B						Y750, Y35, Y46, PAT750, BAT750		BCT500HS, Y500CTHS		OUR840, MD7-34		Y/PAT644XT-18V Series, MY29-11	
	AWG	mm²	AWG	mm²	Barrel A	Barrel B	Barrel A	Barrel B	Barrel A	Barrel B	Barrel A	Barrel B	Barrel A	Barrel B	Barrel A	Barrel B
YSR3126FXLTCKITC	350 kcmil Code	185 mm² Class 2	2/0 AWG Flex or Code	70 mm² Class 5	Red	Black	18	13	U31RT (2)	U26RT (1)	W31VT (2) W31RT (2)	W26VT (2) W26RT (2) X26RT (2)	W31VT (2)	W28VT (2) W28RT (2) X28RT (3)	Y644HSXT (1), PAT644XT-18V (1)	MY29-11 (1), Y644HSXT (1), PAT644XT-18V (1)
YSR3125FXLTCKITC			1/0 AWG Flex or Code	50 mm²	Red	Pink	18	12	U31RT (2)	U25RT (1)	W31VT (2) W31RT (2)	W25VT (2) W25RT (2) X25RT (2)	W31VT (2)	W28VT (2) W28RT (2) X28RT (3)	Y644HSXT (1), PAT644XT-18V (1)	MY29-11 (1), Y644HSXT (1), PAT644XT-18V (1)
YSR312CFXLTCKITC	350 kcmil Code	185 mm² Class 2	#2 AWG Flex or Code	35 mm²	Red	Brown	18	10	U31RT (2)	U2CRT (1)	W31VT (2) W31RT (2)	W2CVT (1) W2CRT (1) X2CRT (1)	W31VT (2)	W26VT (2) W26RT (2) X26RT (2)	Y644HSXT (1), PAT644XT-18V (1)	Y1MRTC (2), MY29-11 (1), Y644HSXT (1), PAT644XT-18V (1)
YSR314CFXLTCKITC †			#4 AWG Flex or Code	—	Red	Gray	18	8	U31RT (2)	U4CRT (1)	W31VT (2) W31RT (2)	W4CVT (1) W4CRT (1) X4CRT (1)	W31VT (2)	W25VT (2) W25RT (2) X25RT (2)	Y644HSXT (1), PAT644XT-18V (1)	Y1MRTC (2), MY29-11 (1), Y644HSXT (1), PAT644XT-18V (1)
YSR316CFXLTCKITC †			#6 AWG Flex or Code	16 mm²	Red	Blue	18	7	U31RT (2)	U5CRT (1)	W31VT (2) W31RT (2)	W5CVT (1) W5CRT (1) X5CRT (1)	W31VT (2)	W2CVT (1) W2CRT (1) X2CRT (1)	Y644HSXT (1), PAT644XT-18V (1)	Y1MRTC (1), MY29-11 (1), Y644HSXT (1), PAT644XT-18V (1)
YSR29FX28LTCKITC	4/0 AWG Flex	120 mm²	4/0 AWG Code	—	Yellow	Purple	16	15	U29RT (1)	U28RT (1)	W29VT (2) W29RT (2) X29RT (4)	W28VT (2) W28RT (2) X28RT (3)	W29VT (2) W29RT (2) X29RT (4)	W4CVT (1) W4CRT (1) X4CRT (1)	Y644HSXT (1), PAT644XT-18V (1)	MY29-11 (1), Y644HSXT (1), PAT644XT-18V (1), MRC840 (2)
YSR29FX25FXLTCKITC			1/0 AWG Flex or Code	50 mm²	Yellow	Pink	16	12	U29RT (1)	U25RT (1)	W29VT (2) W29RT (2) X29RT (4)	W25VT (2) W25RT (2) X25RT (2)	W29VT (2) W29RT (2) X29RT (4)	W5CVT (1) W5CRT (1) X5CRT (1)	Y644HSXT (1), PAT644XT-18V (1)	MY29-11 (1), Y644HSXT (1), PAT644XT-18V (1)
YSR29FX2CFXLTCKITC			#2 AWG Flex or Code	35 mm²	Yellow	Brown	16	10	U29RT (1)	U2CRT (1)	W29VT (2) W29RT (2) X29RT (4)	W2CVT (1) W2CRT (1) X2CRT (1)	W29VT (2) W29RT (2) X29RT (4)	W29VT (2) W29RT (2) X29RT (4)	Y644HSXT (1), PAT644XT-18V (1)	Y1MRTC (2), MY29-11 (1), Y644HSXT (1), PAT644XT-18V (1)
YSR28FX28LTCKITC	4/0 AWG Flex or Telco Flex	120 mm²	4/0 AWG Code	—	Purple	Purple	15	15	U28RT (1)	U28RT (1)	W28VT (2) W28RT (2) X28RT (3)	W28VT (2) W28RT (2) X28RT (3)	W28VT (2) W28RT (2) X28RT (3)	W28VT (2) W28RT (2) X28RT (3)	Y644HSXT (1), PAT644XT-18V (1)	MY29-11 (1), Y644HSXT (1), PAT644XT-18V (1) MRC840 (2)
YSR28FX26FXLTCKITC			2/0 AWG Flex or Code	70 mm² Class 5	Purple	Black	15	13	U28RT (1)	U26RT (1)	W28VT (2) W28RT (2) X28RT (3)	W26VT (2) W26RT (2) X26RT (2)	W28VT (2) W28RT (2) X28RT (3)	W29VT (2) W29RT (2) X29RT (4)	Y644HSXT (1), PAT644XT-18V (1)	MY29-11 (1), Y644HSXT (1), PAT644XT-18V (1)
YSR28FX25FXLTCKITC			1/0 AWG Flex or Code	50 mm²	Purple	Pink	15	12	U28RT (1)	U25RT (1)	W28VT (2) W28RT (2) X28RT (3)	W25VT (2) W25RT (2) X25RT (2)	W28VT (2) W28RT (2) X28RT (3)	W28VT (2) W28RT (2) X28RT (3)	Y644HSXT (1), PAT644XT-18V (1)	MY29-11 (1), Y644HSXT (1), PAT644XT-18V (1)
YSR28FX2CFXLTCKITC			#2 AWG Flex or Code	35 mm²	Purple	Brown	15	10	U28RT (1)	U2CRT (10)	W28VT (2) W28RT (2) X28RT (3)	W2CVT (1) W2CRT (1) X2CRT (1)	W28VT (2) W28RT (2) X28RT (3)	W28VT (2) W28RT (2) X28RT (3)	Y644HSXT (1), PAT644XT-18V (1)	MY29-11 (1), Y644HSXT (1), PAT644XT-18V (1), Y1MRTC (2)

Note 1: All dimensions shown are for reference only.
Note 2: Non-inspection window versions are available. Please contact customer service.

† Provided with 2 heat shrink tubings. One will overlap the other. Install the smaller first and larger second.
** **Clear** Heatshrink – UL224 VW1 Listed – passes TELCORDIA GR-347-CORE Abrasion and Cut Test.

(Up to 750 kcmil Class B code cable. Contact factory for 750 flex cable applications.)

(Installation Tooling Chart continued on next 2 pages)

Blue highlighted items are industry standard and most frequently ordered.

TYPE YSR-TC

INSTALLATION TOOLING CHART (Continued)

In-line Reducer Splice Kits for Telecommunications Applications

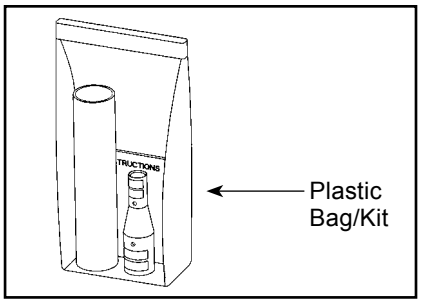

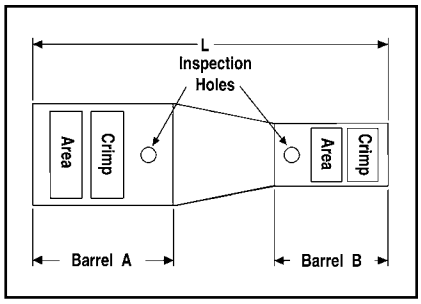

Installation Tooling																	
** Clear Heat Shrink Kit Catalog Number	Wire Range Barrel A AWG	Wire Range Barrel A mm²	Wire Range Barrel B AWG	Wire Range Barrel B mm²	Color Code Barrel A	Color Code Barrel B	Die Index Barrel A	Die Index Barrel B	Hydraulic Y750, Y35, Y46, PAT750, BAT750 Barrel A	Hydraulic Y750, Y35, Y46, PAT750, BAT750 Barrel B	Hydraulic BCT500HS, Y500CTHS Barrel A	Hydraulic BCT500HS, Y500CTHS Barrel B	Mechanical OUR840, MD7-34 Barrel A	Mechanical OUR840, MD7-34 Barrel B	Dieless Y/PAT644XT-18V Series, MY29-11 Barrel A	Dieless Y/PAT644XT-18V Series, MY29-11 Barrel B
YSR28FX4CFXLTCKITC †	4/0 AWG Flex or Telco Flex	120 mm²	#4 AWG Flex or Code	—	Purple	Gray	15	8	U28RT (1)	U4CRT (1)	W28VT (2) W28RT (2) X28RT (3)	W4CVT (1) W4CRT (1) X4CRT (1)	W28VT (2) W28RT (2) X28RT (3)	W4CVT (1) W4CRT (1) X4CRT (1)	Y644HSXT (1), PAT644XT-18V (1)	Y1MRTC (2), MY29-11 (1), Y644HSXT (1), PAT644XT-18V (1)
YSR2825FXLTCKITC	4/0 AWG Code	—	1/0 AWG Flex or Code	50 mm²	Purple	Pink	15	12	U28RT (1)	U25RT (1)	W28VT (2) W28RT (2) X28RT (3)	W25VT (2) W25RT (2) X25RT (2)	W28VT (2) W28RT (2) X28RT (3)	W25VT (2) W25RT (2) X25RT (2)	MY29-11 (1), Y644HSXT (1), PAT644XT-18V (1)	MRC840 (2) MY29-11 (1), Y644HSXT (1), PAT644XT-18V (1)
YSR282CFXLTCKITC			#2 AWG Flex or Code	35 mm²	Purple	Brown	15	10	U28RT (1)	U2CRT (1)	W28VT (2) W28RT (2) X28RT (3)	W2CVT (1) W2CRT (1) X2CRT (1)	W28VT (2) W28RT (2) X28RT (3)	W2CVT (1) W2CRT (1) X2CRT (1)	MY29-11 (1), Y644HSXT (1), PAT644XT-18V (1) MRC840 (2)	Y1MRTC (2), MY29-11 (1), Y644HSXT (1), PAT644XT-18V (1)
YSR284CFXLTCKITC †			#4 AWG Flex or Code	—	Purple	Gray	15	8	U28RT (1)	U4CRT (1)	W28VT (2) W28RT (2) X28RT (3)	W4CVT (1) W4CRT (1) X4CRT (1)	W28VT (2) W28RT (2) X28RT (3)	W4CVT (1) W4CRT (1) X4CRT (1)	MY29-11 (1), Y644HSXT (1), PAT644XT-18V (1) MRC840 (2)	Y1MRTC (2), MY29-11 (1), Y644HSXT (1), PAT644XT-18V (1)
YSR286CFXLTCKITC †			#6 AWG Flex or Code	16 mm²	Purple	Blue	15	7	U28RT (1)	U5CRT (1)	W28VT (2) W28RT (2) X28RT (3)	W5CVT (1) W5CRT (1) X5CRT (1)	W28VT (2) W28RT (2) X28RT (3)	W5CVT (1) W5CRT (1) X5CRT (1)	MY29-11 (1), Y644HSXT (1), PAT644XT-18V (1) MRC840 (2)	Y1MRTC (1), MY29-11 (1), Y644HSXT (1), PAT644XT-18V (1)
YSR26FX25FXLTCKITC	2/0 AWG Flex or Code	70 mm²	1/0 AWG Flex or Code	50 mm²	Black	Pink	13	12	U26RT (1)	U25RT (1)	W26VT (2) W26RT (2) X26RT (2)	W25VT (2) W25RT (2) X25RT (2)	W26VT (2) W26RT (2) X26RT (2)	W25VT (2) W25RT (2) X25RT (2)	MY29-11 (1), Y644HSXT (1), PAT644XT-18V (1)	MY29-11 (1), Y644HSXT (1), PAT644XT-18V (1)
YSR26FX2CFXLTCKITC			#2 AWG Flex or Code	35 mm²	Black	Brown	13	10	U26RT (1)	U2CRT (1)	W26VT (2) W26RT (2) X26RT (2)	W2CVT (1) W2CRT (1) X2CRT (1)	W26VT (2) W26RT (2) X26RT (2)	W2CVT (1) W2CRT (1) X2CRT (1)	MY29-11 (1), Y644HSXT (1), PAT644XT-18V (1)	Y1MRTC (2), MY29-11 (1), Y644HSXT (1), PAT644XT-18V (1)
YSR26FX4CFXLTCKITC †			#4 AWG Flex or Code	—	Black	Gray	13	8	U26RT (1)	U4CRT (1)	W26VT (2) W26RT (2) X26RT (2)	W4CVT (1) W4CRT (1) X4CRT (1)	W26VT (2) W26RT (2) X26RT (2)	W4CVT (1) W4CRT (1) X4CRT (1)	MY29-11 (1), Y644HSXT (1), PAT644XT-18V (1)	Y1MRTC (2), MY29-11 (1), Y644HSXT (1), PAT644XT-18V (1)
YSR26FX6CFXLTCKITC †			#6 AWG Flex or Code	16 mm²	Black	Blue	13	7	U26RT (1)	U5CRT (1)	W26VT (2) W26RT (2) X26RT (2)	W5CVT (1) W5CRT (1) X5CRT (1)	W26VT (2) W26RT (2) X26RT (2)	W5CVT (1) W5CRT (1) X5CRT (1)	MY29-11 (1), Y644HSXT (1), PAT644XT-18V (1)	Y1MRTC (1), MY29-11 (1), Y644HSXT (1), PAT644XT-18V (1)
YSR25FX2CFXLTCKITC	1/0 AWG Flex or Code	50 mm²	#2 AWG Flex or Code	35 mm²	Pink	Brown	12	10	U25RT (1)	U2CRT (1)	W25VT (2) W25RT (2) X25RT (2)	W2CVT (1) W2CRT (1) X2CRT (1)	W25VT (2) W25RT (2) X25RT (2)	W2CVT (1) W2CRT (1) X2CRT (1)	MY29-11 (1), Y644HSXT (1), PAT644XT-18V (1)	Y1MRTC (2), MY29-11 (1), Y644HSXT (1), PAT644XT-18V (1)
YSR25FX4CFXLTCKITC †			#4 AWG Flex or Code	—	Pink	Gray	12	8	U25RT (1)	U4CRT (1)	W25VT (2) W25RT (2) X25RT (2)	W4CVT (1) W4CRT (1) X4CRT (1)	W25VT (2) W25RT (2) X25RT (2)	W4CVT (1) W4CRT (1) X4CRT (1)	MY29-11 (1), Y644HSXT (1), PAT644XT-18V (1)	Y1MRTC (1), MY29-11 (1), Y644HSXT (1), PAT644XT-18V (1)
YSR25FX6CFXLTCKITC †			#6 AWG Flex or Code	16 mm²	Pink	Blue	12	7	U25RT (1)	U5CRT (1)	W25VT (2) W25RT (2) X25RT (2)	W5CVT (1) W5CRT (1) X5CRT (1)	W25VT (2) W25RT (2) X25RT (2)	W5CVT (1) W5CRT (1) X5CRT (1)	MY29-11 (1), Y644HSXT (1), PAT644XT-18V (1)	Y1MRTC (1), MY29-11 (1), Y644HSXT (1), PAT644XT-18V (1)
YSR25FX8CFXLTCKITC			#8 AWG Flex or Code, #6 Sol	10 mm²	Pink	Red	12	49	U25RT (1)	U8CRT (1)	W25VT (2) W25RT (2) X25RT (2)	W8CVT (1) W8CRT (1) X8CRT (1)	W25VT (2) W25RT (2) X25RT (2)	W8CVT (1) W8CRT (1) X8CRT (1)	MY29-11 (1), Y644HSXT (1), PAT644XT-18V (1)	Y8MRB-1 (1), Y1MRTC (1), MY29-3 (1), MY29-11 (1),

Note 1: All dimensions shown are for reference only.
Note 2: Non-inspection window versions are available. Please contact customer service.

† Provided with 2 heat shrink tubings. One will overlap the other. Install the smaller first and larger second.
** **Clear** Heatshrink – UL224 VW1 Listed – passes TELCORDIA GR-347-CORE Abrasion and Cut Test.

(Up to 750 kcmil Class B code cable. Contact factory for 750 flex cable applications.)

(Installation Tooling Chart continued on next page)

Blue highlighted items are industry standard and most frequently ordered.

TYPE YSR-TC

INSTALLATION TOOLING CHART (Continued)

In-line Reducer Splice Kits for Telecommunications Applications

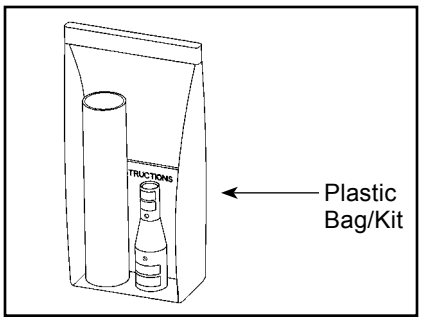

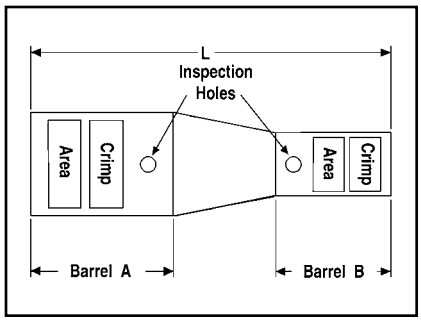

Installation Tooling																
	Wire Range								Hydraulic		Hydraulic		Mechanical		Dieless	
					Color Code		Die Index		Y750, Y35, Y46, PAT750, BAT750		BCT500HS, Y500CTHS		OUR840, MD7-34		Y/PAT644XT-18V Series, MY29-11	
	Barrel A		Barrel B													
** Clear Heat Shrink Kit Catalog Number	AWG	mm²	AWG	mm²	Barrel A	Barrel B	Barrel A	Barrel B	Barrel A	Barrel B	Barrel A	Barrel B	Barrel A	Barrel B	Barrel A	Barrel B
YSR2CFX4CFXLTCKITC	#2 AWG Flex or Code	35 mm²	#4 AWG Flex or Code	—	Brown	Gray	10	8	U2CRT (1)	U4CRT (1)	W2CVT (1) W2CRT (1) X2CRT (1)	W4CVT (1) W4CRT (1) X4CRT (1)	W2CVT (1) W2CRT (1) X2CRT (1)	W4CVT (1) W4CRT (1) X4CRT (1)	Y1MRTC (2), MY29-11 (1), Y644HSXT (1), PAT644XT-18V (1)	Y1MRTC (2), MY29-11 (1), Y644HSXT (1), PAT644XT-18V (1)
YSR2CFX6CFXLTCKITC			#6 AWG Flex or Code	16 mm²	Brown	Blue	10	7	U2CRT (1)	U5CRT (1)	W2CVT (1) W2CRT (1) X2CRT (1)	W5CVT (1) W5CRT (1) X5CRT (1)	W2CVT (1) W2CRT (1) X2CRT (1)	W5CVT (1) W5CRT (1) X5CRT (1)	Y1MRTC (2), MY29-11 (1), Y644HSXT (1), PAT644XT-18V (1)	Y1MRTC (1), MY29-11 (1), Y644HSXT (1), PAT644XT-18V (1)
YSR2CFX8CFXLTCKITC			#8 AWG Flex or Code	10 mm²	Brown	Red	10	49	U2CRT (1)	U8CRT (1)	W2CVT (1) W2CRT (1) X2CRT (1)	W8CVT (1) W8CRT (1) X8CRT (1)	W2CVT (1) W2CRT (1) X2CRT (1)	W8CVT (1) W8CRT (1) X8CRT (1)	Y1MRTC (2), MY29-11 (1), Y644HSXT (1), PAT644XT-18V (1)	Y8MRB-1 (1), Y1MRTC (1), MY29-3 (1), MY29-11 (1)
YSR4CFX6CFXLTCKITC	#4 AWG Flex or Code	—	#6 AWG Flex or Code	16 mm²	Gray	Blue	8	7	U4CRT (1)	U5CRT (1)	W4CVT (1) W4CRT (1) X4CRT (1)	W5CVT (1) W5CRT (1) X5CRT (1)	W4CVT (1) W4CRT (1) X4CRT (1)	W5CVT (1) W5CRT (1) X5CRT (1)	Y1MRTC (2), MY29-11 (1), Y644HSXT (1), PAT644XT-18V (1)	Y1MRTC (1), MY29-11 (1), Y644HSXT (1), PAT644XT-18V (1)
YSR4CFX8CFXLTCKITC			#8 AWG Flex or Code	10 mm²	Gray	Red	8	49	U4CRT (1)	U8CRT (1)	W4CVT (1) W4CRT (1) X4CRT (1)	W8CVT (1) W8CRT (1) X8CRT (1)	W4CVT (1) W4CRT (1) X4CRT (1)	W8CVT (1) W8CRT (1) X8CRT (1)	Y1MRTC (2), MY29-11 (1), Y644HSXT (1), PAT644XT-18V (1)	Y8MRB-1 (1), Y1MRTC (1), MY29-3 (1), MY29-11 (1)
YSR4CFX10CLTCKITC			#10 AWG Flex or Code	6 mm² Str. or 2.5 mm² Flex	Gray	—	8	—	U4CRT (1)	—	W4CVT (1) W4CRT (1) X4CRT (1)	—	W4CVT (1) W4CRT (1) X4CRT (1)	—	Y1MRTC (2), MY29-11 (1), Y644HSXT (1), PAT644XT-18V (1)	Y8MRB-1 (2), MR8G98 (2), Y10D (2)
YSR6CFX8CFXLTCKITC	#6 AWG Flex or Code	16 mm²	#8 AWG Flex or Code	10 mm²	Blue	Red	7	49	U5CRT (1)	U8CRT (1)	W5CVT (1) W5CRT (1) X5CRT (1)	W8CVT (1) W8CRT (1) X8CRT (1)	W5CVT (1) W5CRT (1) X5CRT (1)	W8CVT (1) W8CRT (1) X8CRT (1)	Y1MRTC (1), MY29-11 (1), Y644HSXT (1), PAT644XT-18V (1)	Y8MRB-1 (1), Y1MRTC (1), MY29-3 (1), MY29-11 (1)
YSR6CFX10CLTCKITC			#10 AWG Flex or Code	6 mm² Str. or 2.5 mm² Flex	Blue	—	7	—	U5CRT (1)	—	W5CVT (1) W5CRT (1) X5CRT (1)	—	W5CVT (1) W5CRT (1) X5CRT (1)	—	Y1MRTC (1), MY29-11 (1), Y644HSXT (1), PAT644XT-18V (1)	Y8MRB-1 (2), MR8G98 (2), Y10D (2)
YSR6CFX14CLTCKITC			#14-10 AWG Flex - Str. #12-10 Sol	6 mm² Str. or 2.5 mm² Flex	Blue	—	7	—	U5CRT (1)	—	W5CVT (1) W5CRT (1) X5CRT (1)	—	W5CVT (1) W5CRT (1) X5CRT (1)	—	Y1MRTC (1), MY29-11 (1), Y644HSXT (1), PAT644XT-18V (1	Y8MRB-1 (2), MR8G98 (2), Y10D (2)
YSR8CFX10CLTCKITC	#8 AWG Flex or Code	10 mm²	#10 AWG Flex or Code	6 mm² Str. or 2.5 mm² Flex	Red	—	49	—	U8CRT (1)	—	W8CVT (1) W8CRT (1) X8CRT (1)	—	W8CVT (1) W8CRT (1) X8CRT (1)	—	Y8MRB-1 (1), Y1MRTC (1), MY29-3 (1), MY29-11 (1)	Y8MRB-1 (2), MR8G98 (2), Y10D (2)
YSR8CFX14CLTCKITC			#14 AWG Flex or Code	6 mm² Str. or 2.5 mm² Flex	Red	—	49	—	U8CRT (1)	—	W8CVT (1) W8CRT (1) X8CRT (1)	—	W8CVT (1) W8CRT (1) X8CRT (1)	—	Y8MRB-1 (1), Y1MRTC (1), MY29-3 (1), MY29-11 (1)	Y8MRB-1 (2), MR8G98 (2), Y10D (2)
YSR10CFX12CLTCKITC	#10 AWG Flex or Code	6 mm² Str. or 2.5 mm² Flex	#12 AWG Flex or Code	6 mm² Str. or 2.5 mm² Flex	—	—	—	—	—	—	—	—	—	—	Y8MRB-1 (2), MR8G98 (2), Y10D (2)	Y8MRB-1 (2), MR8G98 (2), Y10D (2)
YSR10CFX14CLTCKITC			#14 AWG Flex or Code	6 mm² Str. or 2.5 mm² Flex	—	—	—	—	—	—	—	—	—	—	Y8MRB-1 (2), MR8G98 (2), Y10D (2)	Y8MRB-1 (2), MR8G98 (2), Y10D (2)

Note 1: All dimensions shown are for reference only.
Note 2: Non-inspection window versions are available. Please contact customer service.

† Provided with 2 heat shrink tubings. One will overlap the other. Install the smaller first and larger second.

** **Clear** Heatshrink – UL224 VW1 Listed – passes TELCORDIA GR-347-CORE Abrasion and Cut Test.(Up to 750 kcmil Class B code cable. Contact factory for 750 flex cable applications.)

Blue highlighted items are industry standard and most frequently ordered.

TYPE YC-L

THIN-WALL COPPER C-TAP

UL Listed to 600 Volts

Type YC-L is a thin-wall high conductivity copper connector for making copper tap and parallel connections from #14 to 3/0 AWG.

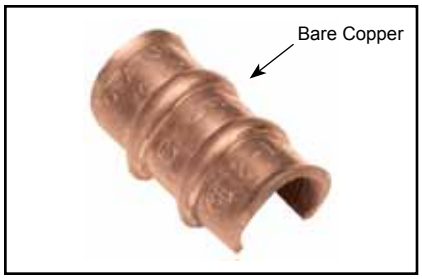

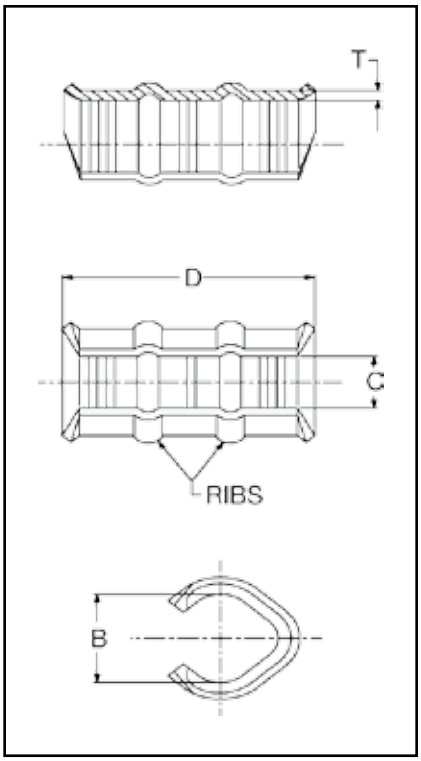

Features & Benefits

- Manufactured from high conductivity wrought copper
  - ◊ Provides low resistance and excellent electrical conductivity
- Range-taking connector
  - ◊ Lowers inventory requirements
- Reinforced ribs
  - ◊ Provides maximum pull-out values
- Compact size
  - ◊ Easy to tape and insulate connection
- Economical
  - ◊ Provides low installed cost

Catalog Number	Accommodates Run	Accommodates Tap	No. of Ribs	Dimensions B	Dimensions C	Dimensions D	Dimensions T	Color Code	Installation Tooling: Mechanical: Y1MRTC	Mechanical: MD6, 0UR840 & MD7-34R Die No. (# crimps)	Mechanical: Die ▲ Index Embossment	Hydraulic: BCT500, Y500CT, BAT500 (# crimps)	Hydraulic: Y35, Y39, Y750, Y45, Y46* (# of crimps)	Hydraulic: Die ▲ Index Embossment	Wire Strip Length
YC8L12	10	10	0	0.25	0.21	0.6	0.07	Blue	Blue (1)	W5CVT (1)	7	—	—	—	5/8"
	8	12													
YC6L12	8	10-8	0	0.33	0.25	0.6	0.07	Gray	Gray (2)	W4CVT (1)	8	—	—	—	5/8"
	6	12-10													
YC4L12**	6	8-6	1	0.39	0.28	1.18	0.07	Brown	Brown (2)	W2CVT (2)	10	WC4 (1)	UC4 (1)	10M	1-3/16"
	5,4	12-8													
YC3L12	5,4	6-5	1	0.46	0.27	1.18	0.08	Green	—	W1CVT (2)	11	—	—	—	1-3/16"
	3	12-6													
YC2L12**	4	4	1	0.5	0.36	1.18	0.08	Pink	—	W25VT (2)	12	WC2 (1)	UC2 (1)	12M	1-3/16"
	3	5													
	2	12-6													
YC1L12**	3	4-3	2	0.55	0.34	1.75	0.08	Black	—	W26VT (3)	13	WC1 (2)	UC1 (1)	13M	1-13/16"
	2	5-4													
	1	12-5													
YC25L12**	2 Str. 2 Sol.	2 Str. 2 Sol. 3 Str. 3 Sol.	2	0.62	0.42	1.75	0.09	Orange	—	W27VT (3)	14	WC25 (2)	UC25 (1)	14M	1-13/16"
	1 Str. 1 Sol.	4 Str. 4 Sol. 3 Str. 3 Sol.													
	1/0 Str. 1/0 Sol.	12 Str. 12 Sol. 4 Str. 4 Sol.													
YC26L12	1	2-1	2	0.69	0.43	1.75	0.09	Purple	—	W28VT (3)	15	—	UC26 (1)	15	1-13/16"
	1/0	3-2													
	2/0	12-3													
YC27L12	1/0	1-1/0	2	0.81	0.48	1.75	0.09	Yellow	—	W29VT (3)	16	—	—	—	1-13/16"
	2/0	2-1													
	3/0	12-2													

▲ See tooling section of this catalog for complete tool and die listings.

* Use PUADP-1 adapter with U dies in Y46 HYPRESS™
For Tin plating add TN suffix (example = YC10L12TN)

Note: All dimensions shown are for reference only.
** Also Listed for Grounding and Bonding (Cannot use Y1MRTC tool for this feature)

Blue highlighted items are industry standard and most frequently ordered.

TYPE YC-C

COPPER CRIMPIT™

UL Listed 90° C,
600 Volts to 35 kV ♦

Type YC-C copper CRIMPIT™ connector is a range-taking C shape compression connector for making tap or parallel copper connections from #12 sol. to 4/0 strand conductor.

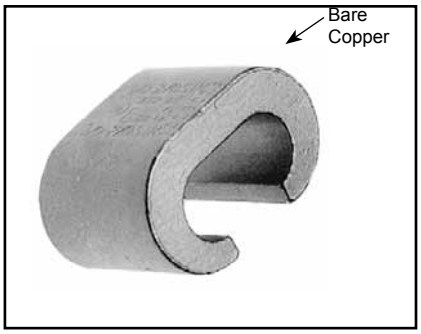

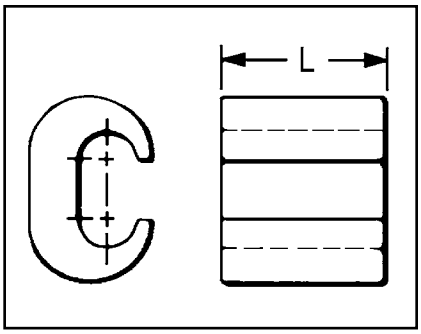

Features & Benefits

- Range-taking conductor
  - ◊ Lowers inventory requirements
- Compact size
  - ◊ Easy to tape and insulate connection
- Manufactured from high conductivity wrought copper
  - ◊ Provides low resistance and excellent electrical conductivity
- Economical
  - ◊ Provides low installed cost

Copperweld-Copper Conductors
8A - Use CRIMPITS™ accommodating 6 str. Copper
6A - Use CRIMPITS™ accommodating 4 Str. Copper
4A - Use CRIMPITS™ accommodating 2 Str. Copper
2A - Use CRIMPITS™ accommodating 1/0 and 2/0 Copper

Catalog Number	Run	Tap	L	▲ Die Index	Tools, Die Set, Catalog Number and (‡No. of Crimps) ▲			CRIMPIT™ for 1 Str. Copper	
					MD6	OUR840	Y35, Y750, Y45, Y46*	Run	Tap
YC10C10 †	12 Sol.-10 Str.	12 Sol.-10 Str.	3/8"	238	W238 (1)	W238 (1)	U238 (1)	—	—
YC8C8	8 Sol.-8 Str.	10 Sol.- 8 Str.	1/2"	162	W162 (2)	W162 (2)	U162** (1)		
YC4C8	6 Sol.-4 Str.	8 Sol.- 8 Str.	5/8"	BG or 5/8	BG (2) W-BG** (1)	XBG (2) XNBG (2)	U-BG (1)	—	—
YC4C6		6 Sol.- 6 Str.							
YC4C4		4 sol.- 4 Str.							
YC2C4	2 Sol.-2 Str.	8 Sol.- 4 Str.	3/4"	C	W-C (2)	—	U-C (1)	1 Str.	6.8 Str., 8 Sol.
YC2C2		2 Sol.- 2 Str.						—	—
YC26C2	1/0 Sol.-2/0 Str.	8 Sol.- 2 Str.	11/12"	E or O	—	—	U-E (3) U-O (1)	1 Str.	1 or 2 Str.
YC26C26		1/0 Sol.- 2/0 Str.						—	—
YC28C2	3/0 Sol.-4/0 Str.	6 Sol.- 2 Str.	1-1/6"	F or D3	—	—	U-F (3) U-D3** (1)	—	—
YC28C26		1/0 Sol.- 2/0 Str.							
YC28C28		3/0.- 4/0 Str.							

† Not UL Listed.
‡ Number of Crimps.
▲ See tooling section of this catalog for complete tool and die listings.

* Use PUADP-1 adapter when using U dies in the Y46 HYPRESS™.
** Multiple crimp die set. Makes more than one crimp per tool compression. Figure ( ) indicates number of compressions.

♦ For applications greater than 2000 Volts consult cable manufacturer for voltage stress relief instructions.
Note: All dimensions shown are for reference only.

TYPE YCHC

C-TAP COPPER CRIMPIT™

90° C

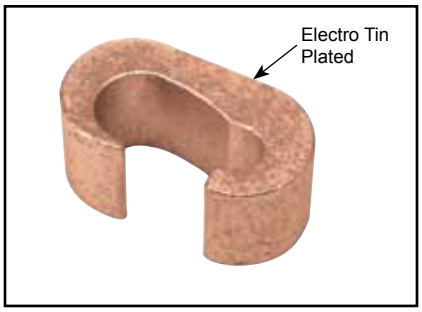

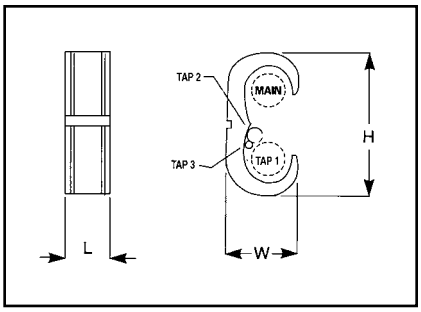

Features & Benefits

- Wide range of run/tap combinations including Class B code I and locomotive flexible conductor combinations. All (B/B, B/I, I/I) combinations are recommended
  - ◊ Each connector accommodates many cable combinations, allowing maximum flexibility for the design and installation of a system
- Color-coded on the connector that matches the die
  - ◊ Provides matched system for fast and easy installation
- Each connector has a recommended insulating cover available. Flame retardant type CF-FR covers meet oxygen index 28 and UL94 V-O requirements
  - ◊ A complete insulated UL Listed installation is provided
- Die index embossed on connector after completion of crimp
  - ◊ Permanent inspectability of installed connector is insure consistently reliable and dependable connections

BURNDY Catalog Number	Flame Retardant Cover		Conductor Sizes Code/(Flex) Cable				▲ Tooling († No. of Crimps)							▲ Die Index & Embossment	H	W	L	Strip Length
	Clear Cat. No.	Black Cat. No. ‡	Main	Tap 1	Tap 2	Tap 3	Y35	†	Y750	†	Y46*	†	Color Code					
YCHC44TC44	**CCFR-FR**	**CFR-FR**	1000-750 (750-500)	1000-750 (750-500)	—	—	—	—	—	—	P1102	1	White	1102	3.59	1.73	1.16	1-1/4"
YCHC39TC39	**CCFR-FR**	**CFR-FR**	750-500 (550-500)	750-350 (550-350)	—	—	—	—	—	—	P1103	1	Blue	1103	3.12	1.53	1.06	1-1/8"
YCHC39TC31	**CCFR-FR**	**CFR-FR**		350-2 (250-2)	2-6 Str./ Sol. (2-8)	8-14 (8-14)	—	—	—	—	P1103	1	Blue	1103	2.96	1.53	1.31	1-3/8"
YCHC39TC2	**CCFR-FR**	**CFR-FR**		2-6 Str./Sol. (2-8)	8-14 (8-14)	—	—	—	—	—	P1103	1	Blue	1103	2.66	1.53	1.31	1-3/8"
YCHC34TC34	**CCFN-FR**	**CFN-FR**	500-4/0 (350-4/0)	500-4/0 (350-4/0)	—	—	—	—	U1104	2	U1104	1	Brown	1104	2.97	1.38	1.00	1-1/4"
YCHC34TC29	**CCFN-FR**	**CFN-FR**		250-2 (4/0-2)	2-6 Str./ Sol. (2-8)	—	—	—	U1104	2	U1104	1	Brown	1104	2.45	1.26	0.88	1"
YCHC34TC2	**CCFN-FR**	**CFN-FR**		2-6 Str./Sol. (2-8)	8-14 (8-14)	—	—	—	U1104	2	U1104	1	Brown	1104	2.45	1.26	0.94	1"
YCHC29TC29	**CCFDXFR**	**CFD-FR**	250-2 (4/0-2)	250-2 (4/0-2)	—	—	—	—	U997	1	U997	1	Orange	997	2.12	0.98	0.94	1"
YCHC29TC2	**CCFD-FR**	**CFD-FR**		2-6 Str./Sol. (2-8)	8-14 (8-14)	—	—	—	U251	1	U251	1	Red	251	1.78	0.97	0.81	1"
YCHC2TC2	**CCFO-FR**	**CFO-FR**	2-6 Str./ Sol. (2-8)	2-6 Str./Sol. (2-8)	8-14 (8-14)	—	U-C	1	U-C	1	U-C	1	Brown	C	1.22	0.60	0.81	1"
YCHC8TC8	♦	♦	8-12 (8-12)	8-12 (8-12)	—	—	U-240	1	U-240	1	U-240	1	Red	240	0.53	0.35	0.56	5/8"

Note: To properly use tap 2 and/or tap 3 conductors in YCHC connector a conductor from the tap 1 cable range must be included in the tap 1 groove.

‡ To obtain covers made of polyethylene remove suffix-FR (example: CFO). CFO is not flame retardant.

* Use PUADP-1 adaptor with U dies in Y46.

▲ See tooling section of Master Catalog for complete tool and die listings.

♦ For applications requiring flame retardant cover, use either a CCFBG-FR (Clear) or CFBG-FR (Black) cover and YH2C2C connector by ordering YH8C8CWCC (Clear) or YH8C8CWC (Black).

Note: All dimensions shown are for reference only.

Blue highlighted items are industry standard and most frequently ordered.

TYPE YH

H-TAP COPPER CRIMPIT™

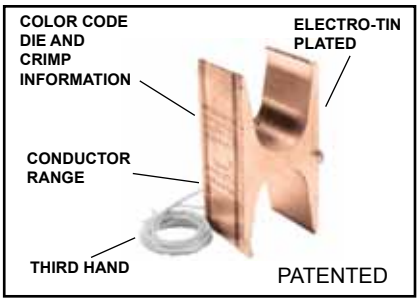

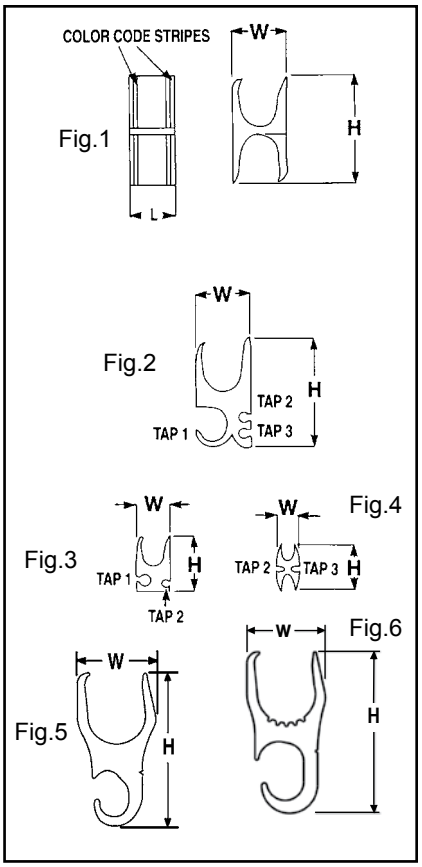

Features & Benefits

- Accommodates a wide range of run/tap copper cable combinations including both flexible and code combinations. All (B/B, B/I, I/B, I/I) combinations acceptable
  - ◊ Each connector has many copper cable combination applications allowing maximum flexibility for the design and installation of a system
- Tap grooves function independently of each other. Use of one tap is required. Balance may be used or left empty
  - ◊ Provides maximum design and installation flexibility
- Color code on the connector matches installation die
  - ◊ Provides matched system for fast and easy installation
- Die index embossed on connector after completion of crimp
  - ◊ Permanent inspectibility of installed connectors to insure consistently reliable and dependable connections
- Recommended flame retardant type CF-FR insulating covers meet oxygen index 28 and UL94 V-O requirements
  - ◊ A complete insulated UL Listed installation is provided
- "Third Hand" constrains conductors while installer completes crimp, included with each connector
  - ◊ Simplifies installation, reducing installed cost

TABLE 1 CODE CONDUCTOR AND METRIC EQUIVALENT

H-Tap Connector	Kit Catalog Number		Fig. No.	Conductor Sizes Code/(Flex Cable)				Metric Conductor Sizes (mm²)			
	Flame Retardant Cover										
	Clear	Black ‡		Main	Tap 1	Tap 2	Tap 3	Main	Tap 1	Tap 2	Tap 3
YH4444	YH4444WCC	YH4444WC	1	1000-750 (750-500) (750)	1000-750 (750-500) (750)	—	—	500-400	500-400	—	—
YH4434*	YH4434WCC*	YH4434WC	6			—	—	1000-750 (777-500) (777-750)	500-350 (350 FX)	—	—
YH4429	YH4429WCC	YH4429WC	5	1000-750 (777-500)	250-2 (4/0-2)	—	—	500-400	150-35	—	—
YH3939	YH3939WCC	YH3939WC	1	750-500 (550-500)	750-350 (550-313)	—	—	300-300	300-185	—	—
YH3931	YH3931WCC	YH3931WC	2	750-350 (550-500)	4/0-1/0 (250-1/0)	1-6 Str/Sol (1-8)	2-14 (2-14)	300-185	95-70	35-16	35-2.5
YH3434	YH3434WCC	YH3434WC	1	500-250 (350-4/0)	500-4/0 (350-4/0)	—	—	240-150	240-120	—	—
YH3429	YH3429WCC	YH3429WC	2	500-4/0 (350-4/0)	250/1/0 (4/0-1/0)	1-6 Str/Sol (1-8)	8-14 (8-14)	240-120	120-70	35-16	6-2.5
YH2929	YH2929WCC	YH2929WC	1	250-2 (4/0-2)	250-2 (4/0-2)	—	—	120-35	120-35	—	—
YH292C	YH292CWCC	YH292CWC	3	250-2 (4/0-2)	2-6 Str/Sol (2-8)	8-14	—	120-35	35-16	6-2.5	—
YH298C	YH298CWCC	YH298CWC	3	250-2 (4/0-2)	8-14	8-14	—	120-35	6-2.5	6-2.5	—
YH2C2C	YH2C2CWCC	YH2C2CWC	4	2-6 Str/Sol (2-8)	2-6 Str/Sol (2-8)	8-14	8-14	35-16	35-16	6-2.5	6-2.5
YH6C6C	YH6C6CWCC	YH6C6CWC	1	6-10 (6-10)	6-14 (6-14)	—	—	10-6	10-2.5	—	—
YH8C8C	YH8C8CWCC	YH8C8CWC	4	8-14 (8-14)	8-14 (8-14)	—	—	6-2.5	6-2.5	—	—

- Use PUADP-1 adaptor with U dies in Y46.

▲ See tooling section of this catalog for complete tool and die listings.

* Not CSA Approved.

Note: All H-Taps ROHS compliant.

Note: All dimensions shown are for reference only.

Blue highlighted items are industry standard and most frequently ordered.

TYPE YH

H-TAP COPPER CRIMPIT™
(Continued)

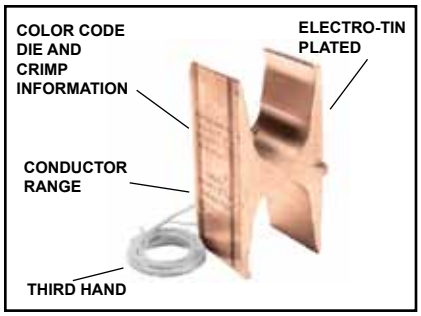

TABLE 2 FLEX AND METRIC CONDUCTOR RANGES

Catalog Number		Maximum Conductor in Range Flex Conductor (AWG/kcmil)	Maximum Metric Dimensions mm²	Diameter mm	Minimum Conductor in Range Flex Conductor (AWG/kcmil)	Minimum Metric Dimensions mm²	Diameter mm
YH4444	Main	777	393	28	500	253	24
	Tap 1	777	393	28	500	253	24
	Main	777	393	28	750	380	31
YH4434*	Tap 1	—	—	—	350	177	20
YH4429	Main	777	393	28	500	253	24
	Tap 1	4/0	107	15.5	2	33.6	8
YH3939	Main	550	278	25	500	253	24
	Tap 1	550	278	25	350	177	20
YH3931	Main	550	278	25	500	253	24
	Tap1	250	126	17	1/0	53.5	11
	Tap 2	1	42	9	8	8	4
	Tap 3	2	33.6	8	14	2	2
YH3434	Main	350	177	20	4/0	107	15.5
	Tap 1	350	177	20	4/0	107	15.5
YH3429	Main	350	177	20	4/0	107	15.5
	Tap 1	4/0	107	15.5	1/0	53	11
	Tap 2	1	42	9	8	8	4
	Tap 3	8	8	4	14	2	2
YH2929	Main	4/0	107	15.5	2	33.6	8
	Tap 1	4/0	107	15.5	2	33.6	8
YH292C	Main	4/0	107	15.5	2	33.6	8
	Tap1	2	33.6	8	8	8	4
	Tap 2	8	8	4	14	2	2
YH298C	Main	4/0	107	15.5	2	33.6	8
	Tap1	8	8	4	14	2	2
	Tap 2	8	8	4	14	2	2
YH2C2C	Main	2	33.6	8	8	8	4
	Tap 1	2	33.6	8	8	8	4
	Tap 2	8	8	4	14	2	2
	Tap 3	8	8	4	14	2	2
YH6C6C	Main	6	13	5	10	5	3
	Tap 1	6	13	5	14	2	2
YH8C8C	Main	8	8	4	14	2	2
	Tap 1	8	8	4	14	2	2

- Use PUADP-1 adaptor with U dies in Y46.

▲ See tooling section of this catalog for complete tool and die listings.

* Not CSA Approved.

Note: All H-Taps ROHS compliant.

Note: All dimensions shown are for reference only.

Blue highlighted items are industry standard and most frequently ordered.

TYPE YH

H-TAP COPPER CRIMPIT™
(Continued)

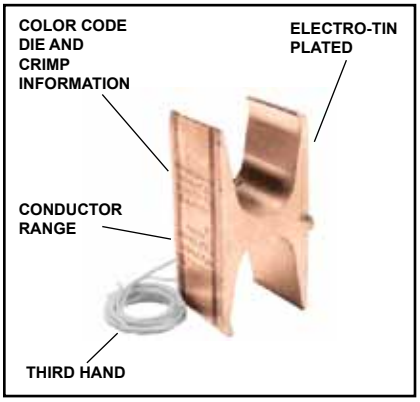

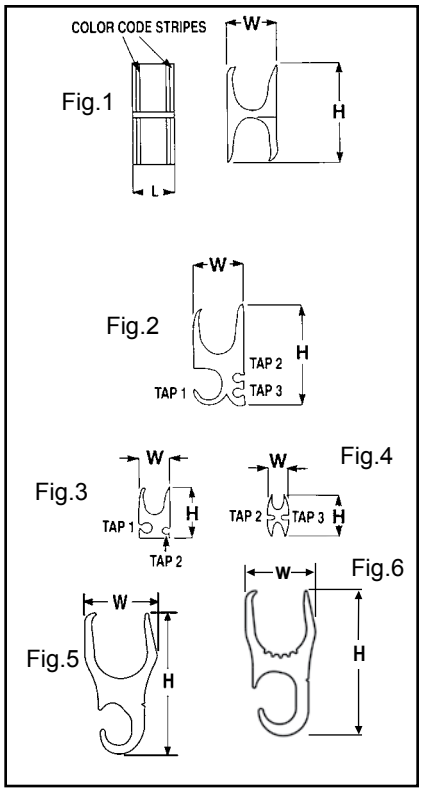

TABLE 3 INSTALLATION TOOLING + DIMENSIONS

BURNDY Catalog Number	Kit Catalog Number		▲ Tooling († No. of Crimps)								▲ Die Index & Embossment	H	W	L	Strip Length
	Flame Retardant Cover														
	Clear	Black ‡	Fig. No.	Y35	†	Y750	†	Y46*	†	Color Code					
YH4444	YH4444WCC	YH4444WC	1	—	—	—	—	P1102	1	White	1102	3.38	1.70	1.00	1-1/8"
YH4434*	YH4434WCC*	YH4434WC	6	—	—	—	—	P1102	1	Yellow	KR	3.38	1.70	1.00	1-3/8"
YH4429	YH4429WCC	YH4429WC	5	—	—	—	—	PYFR	1	Yellow	KR	3.22	1.70	1.00	1-3/8"
YH3939	YH3939WCC	YH3939WC	1	—	—	—	—	PYFR	1	Yellow	KR	2.97	1.50	1.25	1-3/8"
YH3931	YH3931WCC	YH3931WC	2	—	—	—	—	PYFR	1	Yellow	KR	2.97	1.50	0.95	1-1/16"
YH3434	YH3434WCC	YH3434WC	1	—	—	U1104M U1104	1 2	P1104 U1104M	1	Brown	1104	2.43	1.15	1.00	1-1/8"
YH3429	YH3429WCC	YH3429WC	2	—	—	U1104M U1104	1 2	P1104 U1104M	1	Brown	1104	2.23	1.31	1.00	1-1/8"
YH2929	YH2929WCC	YH2929WC	1	—	—	U654	1	U654 P654	1	Purple	654	1.85	0.90	0.90	1-1/16"
YH292C	YH292CWCC	YH292CWC	3	—	—	U654	1	U654 P654	1	Purple	654	1.52	0.90	0.90	1-1/16"
YH298C	YH298CWCC	YH298CWC	3	—	—	U654	1	U654 P654	1	Purple	654	1.52	0.90	0.90	1-1/16"
YH2C2C	YH2C2CWCC	YH2C2CWC	4	U-C	1	U-C	1	U-C	1	Brown	C	1.25	0.60	0.75	7/8"
YH6C6C	YH6C6CWCC	YH6C6CWC	1	UBGRT	1	UBGRT	1	UBGRT	1	Orange	BG	0.81	0.39	0.60	3/4"
YH8C8C	YH8C8CWCC	YH8C8CWC	4	U11T-1	1	U11T-1	1	U11T-1	1	Green	11	0.63	0.40	0.60	3/4"

- Use PUADP-1 adaptor with U dies in Y46.

▲ See tooling section of this catalog for complete tool and die listings.

* Not CSA Approved.

Note: All H-Taps ROHS compliant.

Note: All dimensions shown are for reference only.

Blue highlighted items are industry standard and most frequently ordered.

TYPE CF-FR

H-TAP — FLAME RETARDANT COVER

UL Listed to 600 Volts

600 VOLT 90° C

Catalog Number	Max. Conductor Accommodated	Matched H Copper CRIMPIT™	Max. Connector Length	Connector Color Code
CFBG-FR	#8 AWG	YH8C8C	0.65	Green
	#6 AWG	YH6C6C		Orange
CFO-FR	#2 AWG	YH2C2C	0.80	Brown
CFD-FR	250 kcmil	YH292C, YH298C, YH2929	0.95	Purple
CFN-FR	500 kcmil	YH3434, YH3429*	1.10	Brown
CFR-FR †	750 kcmil	YH3939, YH3931, YH4429	1.30	Yellow
	1000 kcmil	YH4434, YH4444	1.10	Yellow, White

* Use CFN-FR for single tap installation; use CFR-FR when 2 or more tap conductors are installed.

† Two-piece design packaged together.

Note: All dimensions shown are for reference only.

Features & Benefits

- One-piece design
  - ◊ No extra parts or hardware required
- Slips over connector and latches securely shut
  - ◊ Fast, easy, reliable insulation of H-Tap compression
- Eliminates taping
  - ◊ Economical, fast, easy installation
- Flash barriers
  - ◊ Protects against electrical flashover
- CF-FR flame retardant design
  - ◊ Self-extinguishing retardant properties
- Minimum 28 oxygen index
  - ◊ Self-extinguishing retardant properties
- UL 94 V-O rated
  - ◊ Self-extinguishing retardant properties

TYPE CCF-FR

CLEAR H-TAP — FLAME RETARDANT COVER

UL Listed to 600 Volts

600 VOLT 90° C

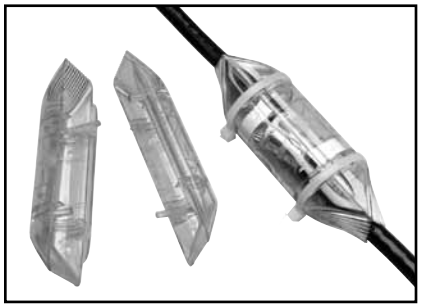

Catalog Number	Max. Conductor Accommodated	Matched H Copper CRIMPIT™	Max. Connector Length	Connector Color Code
CCFBG-FR	#8 AWG	YH8C8C	0.65	Green
	#6 AWG	YH6C6C		Orange
CCFO-FR	#2 AWG	YH2C2C	0.80	Brown
CCFD-FR	250 kcmil	YH292C, YH298C	0.95	Purple
CCFDX-FR	250 kcmil	YH2929	0.95	Purple
CCFN-FR	500 kcmil	YH3434, YH3429*	1.10	Brown
CCFR-FR	750 kcmil	YH3939, YH3931, YH4429	1.30	Yellow
	1000 kcmil	YH4434, YH4444	1.10	White

* Use CCFN-FR for single tap installation; use CCFR-FR when 2 or more tap conductors are installed.

Note: All dimensions shown are for reference only.

Features & Benefits

- Two-Piece design with Positive Locking Latch to ensure correct installation, preventing opening after installation and eliminating the need for taping
- Mounted Magnifying Lens provides in creased visibility of Die Embossment on installed H-Tap Connectors
- Made of Polished Clear Polycarbonate-material that provides:
  - ◊ High visibility for inspection of installed connectors
  - ◊ Flame Retardant UL94 V-O Rated Material-self-extinguishing retardant properties
  - ◊ High impact design
- Built in Channels to accommodate and hold Cable ties, Hook & Loop ties, or Waxed Cord, securely in place after installation
- Patented highly flexible fingers designed to contour around the conductor
- Internal pockets designed to accommodate Identification tags (4 ID tags included)
- Molded barriers prevent installed H-Tap Connectors from Electrical Flashover
- Covers come packaged complete with (2) Cover Halves, (2) Cable Ties and (4) Identification Labels

Blue highlighted items are industry standard and most frequently ordered.

TYPES YSH

H COPPER CRIMPIT™

COPPER SPLIT COMPRESSION WYE TAP CONNECTOR

The YSH heavy duty connectors are designed for insulated underground wye splices. The split H copper CRIMPIT™ connector is longer than our standard H copper CRIMPIT™ and is suitable for use on high voltage (15kV) power cables with copper conductors. The connectors cannot be used with oil filled or mass impregnated cables since no oil stop is provided. The connector is installed with standard BURNDY® HYPRESS™ tools and is made of tin-plated electrolytic copper.

Expanded Tap 1 Components	
Expanded Catalog Number	**Tap 1 Range**
YSH-292C-E	#2 Str.
YSH-2925-E	1/0 Str.

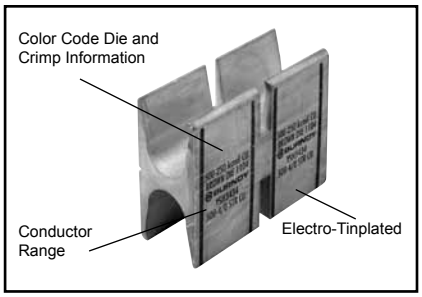

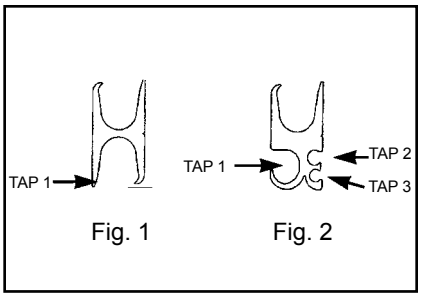

Features & Benefits

- Accommodates a wide range of run/tap copper cable combinations including both flexible and code combinations. All (B/B, B/I, I/B, I/I) combinations acceptable
  - ◊ Each connector has many copper cable combination applications allowing maximum flexibility for the design and installation of a system
- Tap grooves function independently from each other; use of one tap is required, balance may be used or left empty
  - ◊ Provides maximum design and installation flexibility
- Color code on the connector matches installation die
  - ◊ Provides matched system for fast and easy installation
- Die index embossed on connector after completion of crimp
  - ◊ Permanent inspectability of installed connectors to ensure consistently reliable and dependable connections
- Insulation is not provided. Insulation can be obtained from Raychem (800-272-9243) type HVSY Splice kits for 15 kV installations
  - ◊ A complete IEEE 404 15 kV installation is provided

Catalog Number	Conductor Sizes Code Expanded Tap 1 (Flex Cable)					Y750	†	Y46*	†	Color Code	Die Index ▲ & Embossment	H	W	L	Wire Strip Length
	Fig. #	AWG	Tap 1	Tap 2	Tap 3										
YSH2929	1	250 kcmil - #2 AWG (4/0-2)	250 kcmil - #2 AWG (4/0-2)	-	-	U654	4	P654	2	Purple	654	1.85	0.90	3.00	1-1/2 in
YSH3429	2	500 kcmil - 4/0 AWG (350-4/0)	250 kcmil -1/0 AWG (4/0-1/0)	#1-#6 AWG (1-8)	#8-#14 AWG (8-14)	U1104	4	P1104	2	Brown	1104	2.23	1.31	3.00	
YSH3434	1	500- 250 Kcmil (350-4/0)	500 kcmil - 4/0 AWG (350-4/0)	-	-	U1104	4	P1104	2	Brown	1104	2.43	1.15	3.00	
YSH3931	2	750 - 350 Kcmil (550-500)	4/0 - 1/0 AWG (350-1/0)	#1-#6 AWG (1-8)	#2-#14 AWG (2-14)	-	-	PYFR	2	Yellow	KR	2.97	1.50	3.00	
YSH3939	1	750 - 500 Kcmil (550-500)	750 - 350 Kcmil (550-350)	-	-	-	-	PYFR	2	Yellow	KR	2.97	1.50	3.00	

* Use PUADP-1 adaptor with U dies in Y46. The Y46 and P dies result in a smooth crimp surface and is recommended for voltages above 600 V.

▲ See tooling section of this catalog for complete tool and die listings.

† Number of crimps per connector. U dies require double crimps.

Note: All dimensions shown are for reference only.

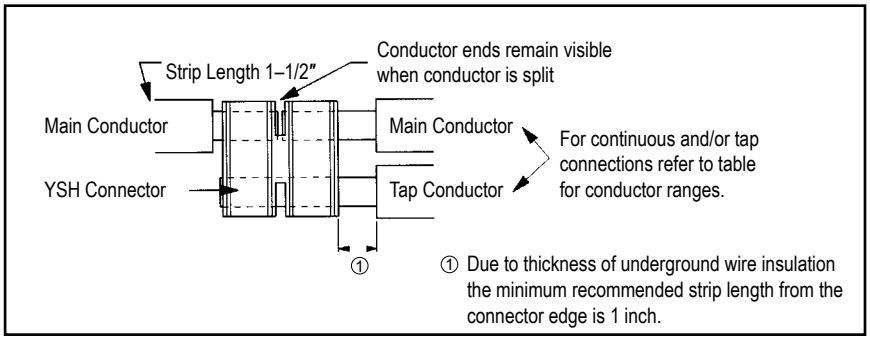

Blue highlighted items are industry standard and most frequently ordered.

TYPE YST

UNINSULATED T

COPPER HYTEE™ COUPLER

UL Listed 90° C,
600 Volts to 35 kV ♦

Type YST copper compression tee is designed for connecting a run conductor with a perpendicular tap conductor.

YST connectors are commonly used in junction boxes and manholes to make a radial tap off a main run. They are needed in many industrial, utility generation and commercial applications. The most common cable combinations are listed below. BURNDY® Type Y-R reducers can be used to accommodate most cable combinations.

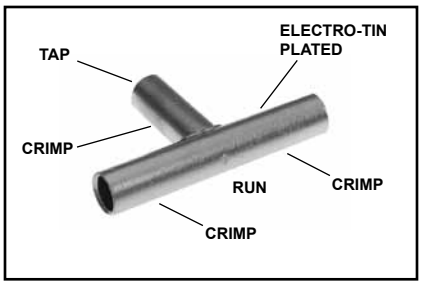

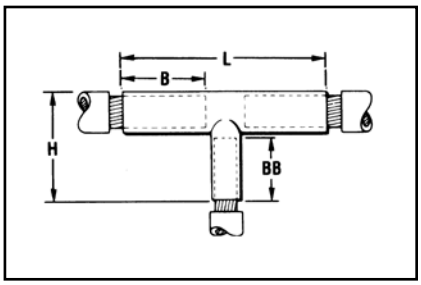

Features & Benefits

- Manufactured from seamless high conductivity electrolytic copper tubing with heavy duty wall thickness
  - ◊ Provides maximum conductivity, low resistance and ductility for an excellent combination of electrical and crimp forming properties
- Long barrel design on all three (3) legs
  - ◊ Provides for an additional crimp or indent with almost twice the pull out strength properties as a standard length barrel plus a connection that will operate cooler under heavy loading
- Long barrel permits the use of the Y-R reducers
  - ◊ Affords total flexibility and versatility for virtually any conductor combination
- Electro-tin plated
  - ◊ Provides durable long-lasting corrosion resistance
- Barrel diameter closely matches commercial (code) cable and Navy cable diameters
  - ◊ Provides an excellent relationship of the conductor/connector combination to produce a high quality electrical connection with the recommended tooling

Catalog Number	Code ● Conductors		Dimensions				Dieless (# of crimps)			Installation Tooling ▲						Wire Length	
										Run Conductors Y35, ▲ 739, Y750, Y46*			Tap Conductors Y35, ▲ 739, Y750, Y46*				
	Run	Tap	B	BB	H	L	(# of crimps)	Mechanical HYTOOL™	Hydraulic HYPRESS™	Die Number (# of crimps)	Color Code	Die Index	Die Number (# of crimps)	Color Code	▲ Die Index	Run	Tap
YST4C4C	4 str.	4 str.	1.12	1.38	1.72	3.25	Y81KFT (1) Y81KFTMBH (1) PAT81KFT-18V (1)	MY29-3 (2) MY29-11 (2) MD6 (4) ** MD7 (4) **	Y644HSXT (1)	U4CRT (2)	Gray	8	U4CRT (2)	Gray	8	1-3/16"	1-3/16"
YST2C2C	2 str.	2 str.	1.25	1.56	1.98	3.56				U2CRT (2)	Brown	10	U2CRT (2)	Brown	10	1-5/16"	1-5/16"
YST2525	1/0 str.	1/0 str.	1.38	1.56	1.91	3.81				U24RT (2)	Pink	12	U25RT (2)	Pink	12	1-7/16"	1-7/16"
YST2626	2/0 str.	2/0 str.	1.50	1.67	2.18	3.94				U26RT (2)	Black	13	U26RT (2)	Black	13	1-9/16"	1-9/16"
YST282C	4/0 str.	2 str.	1.62	1.50	2.12	3.94				U28RT (2)	Purple	15	U2CRT (2)	Brown	10	1-11/16"	1-5/16"
YST2825	4/0 str.	1/0 str.	1.62	1.56	2.25	4.00				U28RT (2)	Purple	15	U25RT (2)	Pink	12	1-11/16"	1-5/8"
YST2828	4/0 str.	4/0 str.	1.62	1.75	2.44	4.19	—			U28RT (2)	Purple	15	U28RT (2)	Purple	15	1-11/16"	1-13/16"
YST2929	250 kcmil	250 kcmil	1.62	1.78	2.53	4.25	Y81KFT (2) Y81KFTMBH (2) PAT81KFT-18V (2)	—		U29RT (2)	Yellow	16	U29RT (2)	Yellow	16	1-11/16"	1-11/16"
YST3131	350 kcmil	350 kcmil	2.00	2.25	3.12	5.50		—		U31RT (4)	Red	18	U31RT (4)	Red	18	2"	2"
YST3428	500 kcmil	4/0 str.	2.25	1.75	2.81	5.81		—		U34RT (4)	Brown	20	U28RT (2)	Purple	15	2-5/16"	1-11/16"
YST3434	500 kcmil	500 kcmil	2.25	2.70	3.76	6.19		—		U34RT (4)	Brown	20	U34RT (4)	Brown	20	2-5/16"	2-5/16"
YST3939	750 kcmil	750 kcmil	2.88	3.34	4.64	8.12		—		U39RT (4)	Black	24	U39RT (4)	Black	24	2-15/16"	2-15/16"

* Use adapter PUADP-1 with U Dies in Y46 HYPRESS™.
** Use with appropriate W Dies (see page O-29).
■ The maximum size for the Y35 is 400 kcmil.
● Contact factory for conductor combinations not shown.
▲ See tooling section of this catalog for complete tool and die listings.
♦ For applications greater than 2000 Volts consult cable manufacturer for voltage stress relief instructions.
Note: All dimensions shown are for reference only.

Blue highlighted items are industry standard and most frequently ordered.

T CONNECTOR

TYPE NYT
CABLE RUN — CABLE TAP

UL Listed 90° C,
600 Volts to 35 kV ♦

A T connector designed to provide a clamp type element on the run and a permanent HYPRESS™ connection on the tap. Recommended for use on ring buses or for applications where occasional disconnects from the run conductor are desired without disturbing the tap connection. Tin plated. For proper installation of tap cable, see table below.

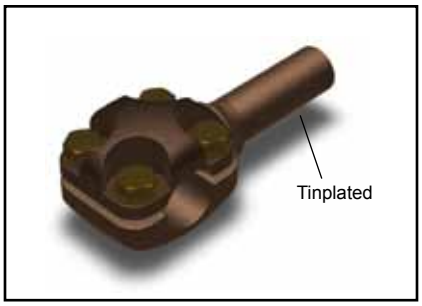

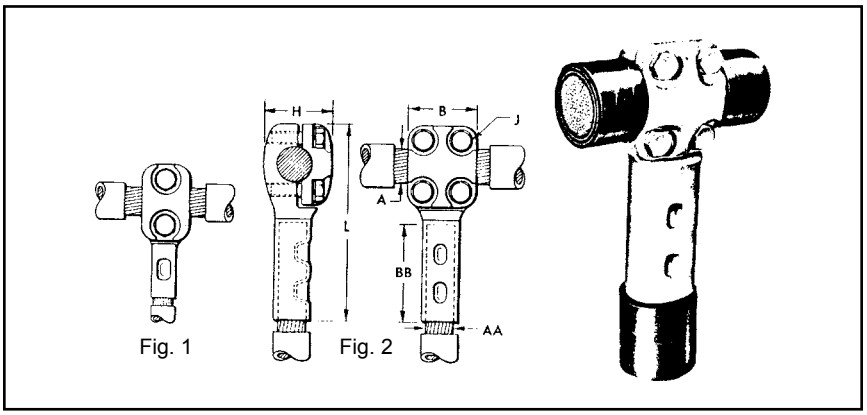

Catalog Number	Conductor Size Run A	Conductor Size Tap AA	Fig. No.	Dimensions in Inches B	BB	H	J	L	Installation Information HYPRESS™ and Indentor Die Y29B with Y29PR	Y34A with Y34PR	Y34B with Y34PR	Y48B with Y44PR	(No. of Indents)	App. Ship. Wt. in Lbs.
									Nest Die					
NYT2828	4/0 Str.	4/0 Str.	2	2	1-5/8	1-3/8	3/8	4-5/16	D28L	A28D	B28D	E28D	(1)	2.2
NYT2925	250 kcmil	1/0 Str.	1	1-3/8	1-3/8	1-7/16	3/8	4-1/16	D25L	A25D	B25D	—	(1)	1.5
NYT2929	250 kcmil	250 kcmil	2	2	1-5/8	1-7/16	3/8	4-7/16	D29L	A29D	B29D	E29D	(1)	2.2
NYT3426	500 kcmil	2/0 Str.	1	1-3/8	1-1/2	1-5/8	3/8	4-7/16	D26L	A26D	B26D	—	(1)	1.7
NYT3428	500 kcmil	4/0 Str.	2	2	1-5/8	1-5/8	3/8	4-5/8	D28L	A28D	B28D	E28D	(1)	2.5
NYT3429	500 kcmil	250 kcmil	2	2	1-5/8	1-5/8	3/8	4-5/8	D29L	A29D	B29D	E29D	(1)	2.5
NYT3434	500 kcmil	500 kcmil	2	2	2-1/4	1-5/8	3/8	5-3/8	—	A34D	No Nest Die Req.	E34D	(2)	2.5
NYT3929	750 kcmil	250 kcmil	2	2	1-5/8	1-7/8	3/8	4-13/16	D29L	A29D	B29D	E29D	(1)	2.5
NYT3934	750 kcmil	500 kcmil	2	2	2-1/4	1-7/8	3/8	5-9/16	—	A34D	No Nest Die Req.	E34D	(2)	2.7
NYT4429	1000 kcmil	250 kcmil	2	2	1-5/8	2-1/8	3/8	5	D29L	A29D	B29D	E29D	(1)	2.5
NYT4431	1000 kcmil	350 kcmil	2	2	2	2-1/8	3/8	5-7/16	—	A31D	B31D	E31D	(2)	2.5
NYT4434	1000 kcmil	500 kcmil	2	2	2-1/4	2-1/8	3/8	5-3/4	—	A34D	No Nest Die Req.	E34D	(2)	2.7
NYT4444	1000 kcmil	1000 kcmil	2	2-11/16	3	2-5/16	1/2	7	—	—	—	No Nest Die Req.	(2)	3.2
NYT4646	1500 kcmil	1500 kcmil	2	2-11/16	3-3/16	2-3/4	1/2	7-11/16	—	—	—	C46D*	(2)	8.0

* Y48B HYPRESS™ with Y48PR indentor.
♦ For applications greater than 2000 Volts consult cable manufacturer for voltage stress relief instructions.

Note: Circumferential dies may be used. For information contact BURNDY®.
Note: All dimensions shown are for reference only.

Blue highlighted items are industry standard and most frequently ordered.

TYPES YE-P, YE-P-FX

HYPLUG™ FOR COPPER CONDUCTOR

Type YE-P copper compression adapters are designed for reliable termination of **copper** conductor when the current capacity of the conductor is downsized, but larger conductor is utilized. Typical applications are for voltage drop protection when oversized conductors are used or flex conductor is used. These adapters facilitate the termination into existing mechanical set screw connectors for various stranded copper cables.

600 v, 900C EPDM rubber cover
Note: Cover supplied with the connector

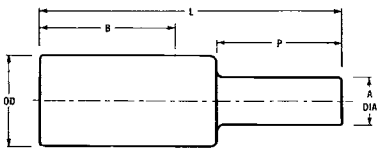

90° C

Catalog Number	Accommodates Copper Wire Sizes: Flex Cable	Code AWG	Navy	Pin Size Equivalent	Dimensions: A Dia	B	L	P	OD	Color Code	Die Index	Installation Data: Mech Tools (# of Crimps): MY	Y1MRTC	MD7-34R	MD6/MD7	Hydraulic Tools (# of Crimps): Y35/Y39 Y750	Y45	④ Y46	Y60 BHU	Y644HSXT (Accomodates Expanded Wire Range)	Cable Strip Length
YEV4CP20X75FX	#4 Str. (91/24-105/24)	#4	40	4 AWG	0.20 [5]	1.37 [35]	2.27 [58]	0.75 [19]	0.38 [10]	Gray	8	MY29-11 (1)	Y1MRTC (4)	W4CVT (2)	W4CRT (2)	U4CRT (2)	U4CRT (2)	U4CRT (2))	—	#4 - #6 AWG(1)	1-1/2"
YEV2CP26X75FX	#2 Str. (125/24-150/24)	#2	60	2 AWG	0.26 [7]	1.65 [42]	2.60 [66]	0.75 [19]	0.46 [12]	Brown	10	MY29-11 (1)	Y1MRTC (4)	W2CVT (2)	W2CRT (2)	U2CRT (2)	U2CRT (2)	U2CRT (2)	—	#2 - #6 AWG(1)	1-3/4"
YEV1CP29X75FX	#1 Str. (175/24-225/24)	#1	75	1 AWG	0.29 [8]	1.66 [42]	2.63 [67]	0.75 [19]	0.51 [13]	Green	11	MY29-11 (1)	—	W1CVT (2)	W1CRT-1 (2)	U1CRT-1 (2)	U1CRT-1 (2)	U1CRT-1 (2)	—	#1 - #6 AWG(1)	1-3/4"
YEV25P33X75FX	1/0 Str. (275/24)	1/0	100	1/0 AWG	0.33 [8]	1.80 [46]	2.80 [71]	0.75 [19]	0.56 [14]	Pink	12	MY29-11 (1)	—	W25VT (4)	W25RT (4)	U25RT (2)	U25RT (2)	U25RT (2)	—	1/0 - #6 AWG(1)	1-7/8"
YEV26P37X75FX	2/0 Str. (325/24)	2/0	125	2/0 AWG	0.37 [9]	1.82 [46]	2.86 [73]	0.75 [19]	0.63 [16]	Black	13	MY29-11 (1)	—	W26VT (4)	W26RT (4)	U26RT (2)	U26RT (2)	U26RT (2)	—	2/0 - #4 AWG(1)	1-7/8"
YEV27P41X82FX	3/0 Str. (450/24)	3/0	150	3/0 AWG	0.41 [10]	1.97 [50]	3.11 [77]	0.82 [21]	0.70 [18]	Or-ange	14	MY29-11 (1)	—	W27VT (4)	W27RT (4)	U27RT (2)	U27RT (2)	U27RT (2)	—	3/0 - #2 AWG(1)	2-1/16"
YEV28P46X92FX	4/0 Str. (550/24)	4/0	200	4/0 AWG	0.46 [12]	1.99 [51]	3.28 [81]	0.92 [23]	0.77 [20]	Purple	15	MY29-11 (1)	—	W28VT (4)	W28RT (4)	U28RT (2)	U28RT (2)	U28RT (2)	—	4/0 - #1 AWG(1)	2-1/16"
	Flex Cable Only																				
YE30P50X100FX	250 kcmil Flex CLASS G 259 CLASS H 427	—		250 kcmil	0.50 [10]	2.37 [60]	3.75 [95]	1.00 [25]	0.81 [21]	Yellow	16	MY29-11 (1)	—	W29VT (4)	W29RT (4)	U29RT (2)	U29RT (2)	U29RT (2)	L29RT (1)	250kcmil-1/0 AWG (1)	2-3/8"
YE31P51X102FX	262.6 kcmil Flex (650/24) 250 Flex CLASS I, K, M	—		262.6 kcmil	0.51 [13]	2.39 [61]	3.82 [97]	1.02 [26]	0.88 [22]	White	17	—	—	W30VT (8)	W30RT (8)	U30RT (4)	U30RT (4)	U30RT (4)	L30RT (1)	250kcmil-1/0 AWG (1)	2-1/2"
YE32P55X110FX	313.1 kcmil (775/24) (300 kcmil Nom)	—		300 kcmil	0.55 [14]	2.53 [65]	4.08 [104]	1.10 [28]	0.95 [24]	Red	18	—	—	W31VT (8)	W31RT (8)	U31RT (4)	U31RT (4)	U31RT (4)	L31RT (1)	300kcmil-2/0 AWG (1)	2-5/8"
YE34P59X118FX	373.7 kcmil (925/24) (350 kcmil Nom)	—		350 kcmil	0.59 [15]	2.68 [68]	4.36 [111]	1.18 [30]	1.06 [27]	Blue	19	—	—	W32VT (8)	W32RT (8)	U32RT (4)	U32RT (4)	U32RT (4)	L32RT (1)	350kcmil-3/0 AWG (1)	2-3/4"
YE36P67X134FX	444.4 kcmil (1100/24) (450 kcmil Nom)	—		450 kcmil	0.67 [17]	3.14 [80]	5.04 [128]	1.34 [34]	1.19 [30]	Brown	20	—	—	W34VT (8)	W34RT (8)	U34RT (4)	U34RT (4)	U34RT (4)	L34RT (2)	450kcmil-4/0 AWG (1)	3-1/4"
YE38P71X142FX	535.3 kcmil (1325/24) (500 kcmil Nom)	—		500 kcmil	0.71 [18]	3.29 [84]	5.30 [135]	1.42 [36]	1.25 [32]	Pink	L99	—	—	—	—	U38XRT (4)	U38XRT (4)	U38XRT (4)	—	500kcmil-4/0 AWG (1)	3-3/8"
YE40P78X156FX	646 kcmil (1600/24) (600 kcmil Nom)	—		600 kcmil	0.78 [20]	3.31 [84]	5.51 [140]	1.56 [40]	1.35 [34]	Black	24	—	—	—	—	U39RT (4)	U39RT (4)	U39RT (4)	L39RT (2)	600kcmil-250 kcmil (1)	3-7/16"
YE44P87X174FX	777.7 kcmil (1925/24) (750 kcmil Nom)	—		750 kcmil	0.87 [22]	3.54 [90]	5.99 [152]	1.74 [44]	1.50 [38]	Yellow	L115	—	—	—	—	U44XRT (4)	U44XRT (4)	U44XRT (4)	—	750kcmil-500 kcmil (1)	3-5/8"
	Code Conductor Only AWG																				
YE29P50X100	250 kcmil	250		250 kcmil	0.50 [13]	1.99 [51]	3.33 [84]	1.00 [25]	0.75 [19]	Yellow	16	MY29-11 (1)	—	W29VT (4)	W29RT (4)	U29RT (2)	U29RT (2)	U29RT (2)	—	250 kcmil - 1/0 AWG (1)	2-1/2"
YE30P55X110	300 kcmil	300		300 kcmil	0.55 [14]	2.37 [60]	3.85 [98]	1.10 [28]	0.81 [21]	White	17	—	—	W30VT (8)	W30RT (8)	U30RT (4)	U30RT (4)	U30RT (4)	L30RT (1)	300 kcmil - 2/0 AWG(1)	2-5/8"
YE31P59X118	350 kcmil	350		350 kcmil	0.59 [15]	2.39 [61]	3.98 [101]	1.18 [30]	0.88 [22]	Red	18	—	—	W31VT (8)	W31RT (8)	U31RT (4)	U31RT (4)	U31RT (4)	L31RT (1)	350 kcmil - 3/0 AWG(1)	2-3/4"
YE32P63X126	400 kcmil	400		400 kcmil	0.63 [16]	2.53 [65]	4.24 [108]	1.26 [32]	0.95 [24]	Blue	19	—	—	W32VT (8)	W32RT (8)	U32RT (4)	U32RT (4)	U32RT (4)	L32RT (1)	400 kcmil - 4/0 AWG(1)	3-1/4"
YE34P71X142	500 kcmil	—		500 kcmil	0.71 [18]	2.68 [68]	4.60 [117]	1.42 [36]	1.06 [27]	Brown	20	—	—	W34VT (8)	W34RT (8)	U34RT (4)	U34RT (4)	U34RT (4)	L34RT (2)	500 kcmil - 4/0 AWG(1)	3-3/8"
YE36P78X156	600 kcmil	—		600 kcmil	0.78 [20]	3.14 [80]	3.78 [133]	1.56 [40]	1.19 [30]	Green	22	—	—	—	—	U36RT (4)	U36RT (4)	U36RT (4)	L36RT (2)	600 kcmil - 250 kcmil(1)	1-3/4"
YE39P87X174	750 kcmil	—		750 kcmil	0.87 [22]	3.37 [86]	5.73 [145]	1.74 [44]	1.30 [33]	Black	24	—	—	—	—	U39RT (4)	S39RT (4)	P39RT (4)	L39RT (2)	750 kcmil - 500 kcmil(1)	3-5/8"

1. For sizes above 4/0 the MD6-6R2 must be used.

④ To use U Dies in Y46 HYPRESS™, catalog number PUADP-1 die adaptor is required.

Note: All dimensions shown are for reference only.
This page only is UL Listed

Blue highlighted items are industry standard and most frequently ordered.

TYPES YE-P, YE-P-FX
(Continued)

HYPLUG™ FOR COPPER CONDUCTOR

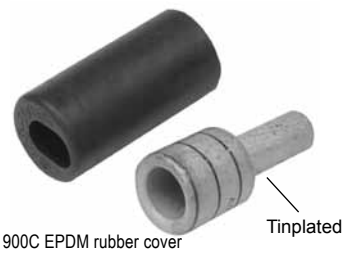

600 v, 900C EPDM rubber cover
Note: Cover supplied with the connector

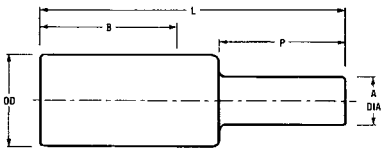

Catalog Number	Accommodates Copper Wire Sizes: Flex Cable	Code AWG	Navy	Pin Size Equivalent	Dimensions: A Dia	B	L	P	OD	Installation Data: Color Code	Die Index	Mech Tools (# of Crimps): MY	Y1MRTC	MD7-34R	MD6/MD7	Hydraulic Tools (# of Crimps): Y35/Y39 Y750	Y45	④ Y46	Y60 BHU	Y644HSXT (Accomodates Expanded Wire Range)	Cable Strip Length
YEV2CP23X75FX	#2 Str. (125/24-150/24)	#2	60	3 AWG	0.23 [6]	1.65 [42]	2.60 [66]	0.75 [19]	0.46 [12]	Brown	10	MY29-11 (1)	Y1MRTC (4)	W2CVT (2)	W2CRT (2)	U2CRT (2)	U2CRT (2)	U2CRT (2)	—	#2 - #6 AWG(1)	1-3/4 "
YEV1CP26X75FX	#1 Str. (175/24-225/24)	#1	75	2 AWG	0.26 [7]	1.66 [42]	2.63 [67]	0.75 [19]	0.51 [13]	Green	11	MY29-11 (1)	—	W1CVT (2)	W1CRT-1 (2)	U1CRT-1 (2)	U1CRT-1 (2)	U1CRT-1 (2)	—	#1 - #6 AWG(1)	1-3/4"
YEV25P29X75FX	1/0 Str. (275/24)	1/0	100	1 AWG	0.29 [8]	1.80 [46]	2.80 [71]	0.75 [19]	0.56 [14]	Pink	12	MY29-11 (1)	—	W25VT (4)	W25RT (4)	U25RT (2)	U25RT (2)	U25RT (2)	—	1/0 - #6 AWG(1)	1-7/8"
YEV26P33X75FX	2/0 Str. (325/24)	2/0	125	1/0 AWG	0.33 [8]	1.82 [46]	2.86 [73]	0.75 [19]	0.63 [16]	Black	13	MY29-11 (1)	—	W26VT (4)	W26RT (4)	U26RT (2)	U26RT (2)	U26RT (2)	—	2/0 - #4 AWG(1)	1-7/8"
YEV27P37X75FX	3/0 Str. (450/24)	3/0	150	2/0 AWG	0.37 [9]	1.97 [50]	3.04 [77]	0.75 [19]	0.70 [18]	Or-ange	14	MY29-11 (1)	—	W27VT (4)	W27RT (4)	U27RT (2)	U27RT (2)	U27RT (2)	—	3/0 - #2 AWG(1)	2-1/16"
YEV28P41X75FX	4/0 Str. (550/24)	4/0	200	3/0 AWG	0.41 [10]	1.99 [51]	3.11 [81]	0.75 [21]	0.77 [20]	Purple	15	MY29-11 (1)	—	W28VT (4)	W28RT (4)	U28RT (2)	U28RT (2)	U28RT (2)	—	4/0 - #1 AWG(1)	2-1/16"
	Flex Cable Only																				
YE30P46X92FX	250 kcmil Flex Class G 259 Class H 427	—		4/0	0.46 [12]	2.37 [60]	3.67 [93]	0.92 [23]	0.81 [21]	Yellow	16	MY29-11 (1)	—	W29VT (4)	W29RT (4)	U29RT (2)	U29RT (2)	U29RT (2)	L29RT (1)	250 kcmil - 1/0 AWG (1)	2-3/8 "
YE32P51X102FX	313.1 kcmil (775/24) (300 kcmil Nom)	—		250 kcmil	0.51 [13]	2.53 [65]	4.00 [102]	1.02 [26]	0.95 [24]	Red	18	—	—	W31VT (8)	W31RT (8)	U31RT (4)	U31RT (4)	U31RT (4)	L31RT (1)	300 kcmil - 2/0 AWG (1)	2-5/8 "
YE34P55X110FX	373.7 kcmil (925/24) (350 kcmil Nom)	—		300 kcmil	0.55 [14]	2.68 [68]	4.28 [109]	1.10 [28]	1.06 [27]	Blue	19	—	—	W32VT (8)	W32RT (8)	U32RT (4)	U32RT (4)	U32RT (4)	L32RT (1)	350 kcmil - 3/0 AWG (1)	2-3/4 "
YE36P59X118FX	444.4 kcmil (1100/24) (450 kcmil Nom)	—		350 kcmil	0.59 [15]	3.14 [80]	4.88 [124]	1.18 [30]	1.19 [30]	Brown	20	—	—	W34VT (8)	W34RT (8)	U34RT (4)	U34RT (4)	U34RT (4)	L34RT (2)	450 kcmil - 4/0 AWG (1)	3-1/4 "
YE38P67X134FX	535.3 kcmil (1325/24) (500 kcmil Nom)	—		450 kcmil	0.67 [17]	3.29 [84]	5.22 [133]	1.34 [34]	1.25 [32]	Pink	L99	—	—	—	—	U38XRT (4)	U38XRT (4)	U38XRT (4)	—	500 kcmil - 4/0 AWG (1)	3-3/8 "
YE40P71X142FX	646 kcmil (1600/24) (600 kcmil Nom)	—		500 kcmil	0.71 [18]	3.31 [84]	5.37 [136]	1.42 [36]	1.35 [34]	Black	24	—	—	—	—	U39RT (4)	U39RT (4)	U39RT (4)	L39RT (2)	600 kcmil - 250 kcmil (1)	3-7/16"
YE44P78X156FX	777.7 kcmil (1925/24) (750 kcmil Nom)	—		600 kcmil	0.78 [20]	3.54 [90]	5.81 [148]	1.56 [40]	1.50 [38]	Yellow	L115	—	—	—	—	U44XRT (4)	U44XRT (4)	U44XRT (4)	—	750 kcmil - 500 kcmil (1)	3-5/8 "
	Code Conductor Only AWG																				
YE29P46X92	250 kcmil	250		4/0	0.46 [12]	1.99 [51]	3.25 [82]	0.92 [23]	0.75 [19]	Yellow	16	MY29-11 (1)	—	W29VT (4)	W29RT (4)	U29RT (2)	U29RT (2)	U29RT (2)	—	250 kcmil - 1/0 AWG (1)	2-1/2 "
YE30P50X100	300 kcmil	300		250 kcmil	0.50 [13]	2.37 [60]	3.75 [95]	1.00 [25]	0.81 [21]	White	17	—	—	W30VT (8)	W30RT (8)	U30RT (4)	U30RT (4)	U30RT (4)	L30RT (1)	300 kcmil - 2/0 AWG (1)	2-5/8 "
YE31P55X110	350 kcmil	350		300 kcmil	0.55 [14]	2.39 [61]	3.90 [99]	1.10 [28]	0.88 [22]	Red	18	—	—	W31VT (8)	W31RT (8)	U31RT (4)	U31RT (4)	U31RT (4)	L31RT (1)	350 kcmil - 3/0 AWG (1)	2-3/4 "
YE32P59X118	400 kcmil	400		350 kcmil	0.59 [15]	2.53 [65]	4.16 [106]	1.18 [30]	0.95 [24]	Blue	19	—	—	W32VT (8)	W32RT (8)	U32RT (4)	U32RT (4)	U32RT (4)	L32RT (1)	400 kcmil - 4/0 AWG (1)	3-1/4 "
YE34P63X126	500 kcmil	—		400 kcmil	0.63 [16]	2.68 [68]	4.44 [113]	1.26 [32]	1.06 [27]	Brown	20	—	—	W34VT (8)	W34RT (8)	U34RT (4)	U34RT (4)	U34RT (4)	L34RT (2)	500 kcmil - 4/0 AWG (1)	3-3/8 "
YE36P71X142	600 kcmil	—		500 kcmil	0.71 [18]	3.14 [80]	5.11 [130]	1.42 [36]	1.19 [30]	Green	22	—	—	—	—	U36RT (4)	U36RT (4)	U36RT (4)	L36RT (2)	600 kcmil - 250 kcmil (1)	3-7/16 "
YE39P78X156	750 kcmil	—		600 kcmil	0.78 [20]	3.37 [86]	5.55 [141]	1.56 [40]	1.30 [33]	Black	24	—	—	—	—	U39RT (4)	S39RT (4)	P39RT (4)	L39RT (2)	750 kcmil - 500 kcmil (1)	3-5/8 "

1. For sizes above 4/0 the MD6-6R2 must be used.

④ To use U Dies in Y46 HYPRESS™, catalog number PUADP-1 die adaptor is required.

Note: All dimensions shown are for reference only.

Blue highlighted items are industry standard and most frequently ordered.

TYPES YE-P, YE-P-FX
(Continued)

HYPLUG™ FOR COPPER CONDUCTOR

600 v, 900C EPDM rubber cover
Note: Cover supplied with the connector

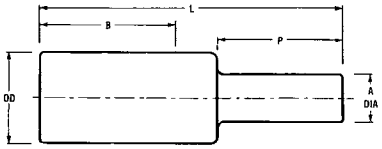

REDUCED PIN DIAMETER

Catalog Number	Accommodates Copper Wire Sizes: Flex Cable	Code AWG	Navy	Pin Size Equivalent	Dimensions: A Dia	B	L	P	OD	Installation Data: Color Code	Die Index	Mech Tools (# of Crimps): MY	Y1M-RTC	MD7-34R	MD6/MD7	Hydraulic Tools (# of Crimps): Y35/Y39 Y750	Y45	④ Y46	Y60 BHU	Y644HSXT (Accomodates Expanded Wire Range)	Cable Strip Length
YEV4CP16X75FX	#4 Str. (91/24-105/24)	#4	40	#6	0.16 [4]	1.37 [35]	2.27 [58]	0.75 [19]	0.38 [10]	Gray	8	MY29-11 (1)	Y1MRTC (2)	W4CVT (2)	W4CRT (2)	U4CRT (2)	U4CRT (2)	U4CRT (2)	—	#4 - #6 AWG(1)	1-15/32 "
YEV2CP20X75FX	#2 Str. (125/24-150/24)	#2	60	#4	0.20 [5]	1.65 [42]	2.60 [66]	0.75 [19]	0.46 [12]	Brown	10	MY29-11 (1)	Y1MRTC (2)	W2CVT (2)	W2CRT (2)	U2CRT (2)	U2CRT (2)	U2CRT (2)	—	#2 - #6 AWG(1)	1-3/4 "
YEV1CP23X75FX	#1 Str. (175/24-225/24)	#1	75	#3	0.23 [6]	1.66 [42]	2.63 [67]	0.75 [19]	0.51 [13]	Green	11	MY29-11 (1)	—	W1CVT (2)	W1CRT-1 (2)	U1CRT-1 (2)	U1CRT-1 (2)	U1CRT-1 (2)	—	#1 - #6 AWG(1)	1-3/4 "
YEV25P26X75FX	1/0 Str. (275/24)	1/0	100	#2	0.26 [7]	1.80 [46]	2.80 [71]	0.75 [19]	0.56 [14]	Pink	12	MY29-11 (1)	—	W25VT (4)	W25RT (4)	U25RT (2)	U25RT (2)	U25RT (2)	—	1/0 - #6 AWG(1)	1-7/8 "
YEV26P29X75FX	2/0 Str. (325/24)	2/0	125	#1	0.29 [8]	1.82 [46]	2.86 [73]	0.75 [19]	0.63 [16]	Black	13	MY29-11 (1)	—	W26VT (4)	W26RT (4)	U26RT (2)	U26RT (2)	U26RT (2)	—	2/0 - #4 AWG(1)	1-7/8 "
YEV27P33X75FX	3/0 Str. (450/24)	3/0	150	1/0	0.33 [8]	1.97 [50]	3.04 [77]	0.75 [19]	0.70 [18]	Orange	14	MY29-11 (1)	—	W27VT (4)	W27RT (4)	U27RT (2)	U27RT (2)	U27RT (2)	—	3/0 - #2 AWG(1)	2-1/16 "
YEV28P37X75FX	4/0 Str. (550/24)	4/0	200	2/0	0.37 [9]	1.99 [51]	3.11 [81]	0.75 [19]	0.77 [20]	Purple	15	MY29-11 (1)	—	W28VT (4)	W28RT (4)	U28RT (2)	U28RT (2)	U28RT (2)	—	4/0 - #1 AWG(1)	2-1/16 "
	Flex Cable Only																				
YE31P41X82FX	262.6 kcmil (650/24) 250 Flex Class I, K, M	—		3/0	0.41 [10]	2.39 [61]	3.62 [92]	0.82 [21]	0.88 [22]	White	17	—	—	W30VT (8)	W30RT (8)	U30RT (4)	U30RT (4)	U30RT (4)	L30RT (1)	250kcmil-1/0 AWG (1)	2-1/2"
YE34P51X102FX	373.7 kcmil (925/24) (350 kcmil Nom)	—		250 kcmil	0.51 [13]	2.68 [68]	4.20 [107]	1.02 [26]	1.06 [27]	Blue	19	—	—	W32VT (8)	W32RT (8)	U32RT (4)	U32RT (4)	U32RT (4)	L32RT (1)	350kcmil-3/0 AWG (1)	2-3/4"
YE38P59X118FX	535.3 kcmil (1325/24) (500 kcmil Nom)	—		350 kcmil	0.59 [15]	3.29 [84]	5.06 [129]	1.18 [30]	1.25 [32]	Pink	L99	—	—	—	—	U38XRT (4)	U38XRT (4)	U38XRT (4)	—	500kcmil-4/0 AWG (1)	3-3/8"
YE40P67X134FX	646 kcmil (1600/24) (600 kcmil Nom)	—		450 kcmil	0.67 [17]	3.31 [84]	5.29 [134]	1.34 [34]	1.35 [34]	Black	24	—	—	—	—	U39RT (4)	U39RT (4)	U39RT (4)	L39RT (2)	600kcmil-250 kcmil (1)	3-7/16"
	Code Conductor Only AWG																				
YE29P31X109	250 kcmil	250		#1	0.31 [8]	1.06 [27]	2.49 [63]	1.09 [28]	0.75 [19]	Yellow	16	—	—	—	W29RT (4)	U29RT (2)	U29RT (2)	U29RT (2)	L29RT (2)	—	1-1/8
YE29P41X82	250 kcmil			3/0	0.41 [10]	1.99 [51]	3.15 [80]	0.82 [21]	0.75 [19]	Yellow	16	MY29-11 (1)	—	W29VT (4)	W29RT (4)	U29RT (2)	U29RT (2)	U29RT (2)	—	250 kcmil - 1/0 AWG(1)	2-1/2 "
YE30P46X92	300 kcmil	300		4/0	0.46 [12]	2.37 [60]	3.67 [93]	0.92 [23]	0.81 [21]	White	17	—	—	W30VT (8)	W30RT (8)	U30RT (4)	U30RT (4)	U30RT (4)	L30RT (1)	300 kcmil - 2/0 AWG(1)	2-5/8 "
YE31P50X100	350 kcmil	350		250 kcmil	0.51 [13]	2.39 [61]	3.80 [96]	1.00 [25]	0.88 [22]	Red	18	—	—	W31VT (8)	W31RT (8)	U31RT (4)	U31RT (4)	U31RT (4)	L31RT (1)	350 kcmil - 3/0 AWG(1)	2-3/4 "
YE36P63X126	600 kcmil	400		400 kcmil	0.63 [16]	3.14 [80]	4.95 [126]	1.26 [32]	1.19 [30]	Green	22	—	—	—	—	U36RT (4)	U36RT (4)	U36RT (4)	L36RT (2)	600 kcmil - 250 kcmil(1)	3-7/16 "
YE39P71X142	750 kcmil	—		500 kcmil	0.71 [18]	3.37 [86]	5.41 [137]	1.42 [36]	1.30 [33]	Black	24	—	—	—	—	U39RT (4)	S39RT (4)	P39RT (4)	L39RT (2)	750 kcmil - 500 kcmil(1)	3-5/8"
YE32P55X110	400 kcmil	—		300 kcmil	0.55 [14]	2.53 [65]	4.08 [104]	1.10 [28]	0.95 [24]	Blue	19	—	—	W32VT (8)	W32RT (8)	U32RT (4)	U32RT (4)	U32RT (4)	L32RT (1)	400 kcmil - 4/0 AWG(1)	3-1/4 "
YE34P59X118	500 kcmil	—		350 kcmil	0.59 [15]	2.68 [68]	4.36 [111]	1.18 [30]	1.06 [27]	Brown	20	—	—	W34VT (8)	W34RT (8)	U34RT (4)	U34RT (4)	U34RT (4)	L34RT (2)	500 kcmil - 4/0 AWG(1)	3-3/8 "

1. For sizes above 4/0 the MD6-6R2 must be used.

④ To use U Dies in Y46 HYPRESS™, catalog number PUADP-1 die adaptor is required.

Note: All dimensions shown are for reference only.

Blue highlighted items are industry standard and most frequently ordered.

TYPE ASA-U

HYSTACK™ TERMINAL STACKING ADAPTOR

FOR ALUMINUM AND COPPER TERMINALS

UL Listed 90° C,
600 Volts to 35 kV

The HYSTACK™ adaptor is specially designed to allow standard terminals to be stacked on two or four hole NEMA transformer or equipment terminal pads. HYSTACK™ is tin-plated, high-conductivity aluminum to provide optimum corrosion resistance. Only three sizes accommodate terminals from 250 mcm through 1000 mcm to help keep costly inventories to a minimum.

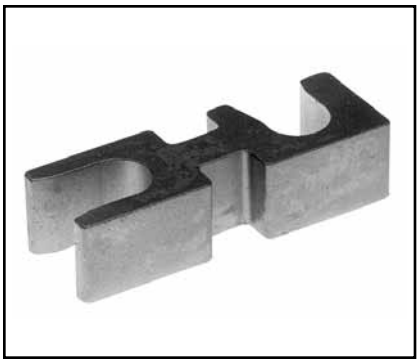

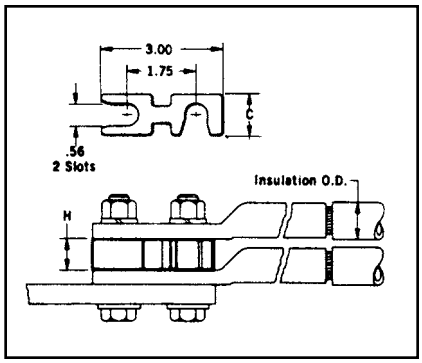

Accommodates Copper and Aluminum Compression Terminals		Catalog Number	C	H
Conductor Max.	Insulation O.D.			
250 kcmil	0.87	**ASA250U**	1.00	0.77
800 kcmil	1.37	**ASA800U**	1.00	1.13
1000 kcmil	1.49	**ASA1000U**	1.25	1.25

To stack 4 hole NEMA drilled terminals use 2 adaptors assembled side by side.

ASA-U stacking adaptors are recommended for use with any BURNDY® UL Listed compression terminal, 2 or 4 hole NEMA pad aluminum and copper lugs,types YA, YA-L, YA-A, and for all 2-hole NEMA spaced lugs in the OVERHEAD and UNDERGROUND catalog sections.
Note: All dimensions shown are for reference only.

TYPE CUSA

HYSTACK™

TERMINAL STACKING ADAPTOR

This HYSTACK™ adaptor is specially designed to get terminals to the back end of a bus bar or other areas that require terminals to be elevated off the mounting surface. This HYSTACK™ is made from high conductivity copper and tin-plated to provide optimum corrosion resistance. It will accommodate #10 AWG through 750 kcmil HYLUG™ terminals.

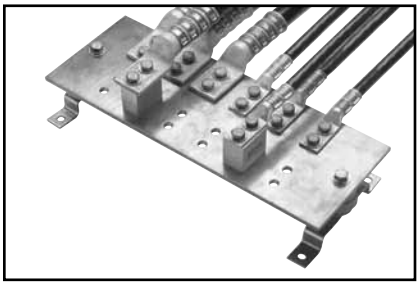

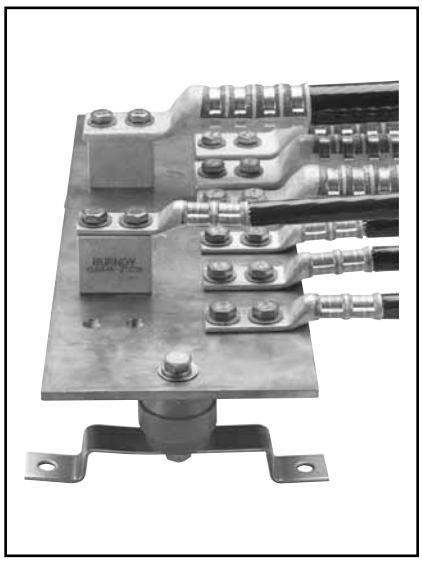

Reference: Catalog Number TMH332.
This TMH332 Kit has just the right hardware when using the CUSA442TC38 HYSTACK on a 1/4 bus bar with a 4/0 through 750 kcmil HYLUG™.

Catalog Number	Stud Hole Size	Stud Hole Spacing	Length	Width	Height
CUSA442TC38	3/8"	1"	1.75"	1.12"	1.50"
CUSA442NTC	1/2"	1-3/4"	3.00"	1.12"	1.50"

Note: All dimensions shown are for reference only.

Blue highlighted items are industry standard and most frequently ordered.

TYPES YA-A AND YA-A-TN

HYLUG™

UNINSULATED ALUMINUM COMPRESSION TERMINAL

FOR ALUMINUM AND COPPER CONDUCTORS

1-HOLE DESIGN

UL Listed 90° C,
600 Volts to 35 kV ♦

Type YA-A aluminum tin-plated compression HYLUG™ terminals are dual-rated and designed for use on both aluminum and copper conductors from #12 sol. through 2000 kcmil.

They are designed for heavy duty applications to 35kV. YA-A terminals are prefilled with PENETROX™, and assembled with color-coded end caps. The aluminum HYLUG™ terminals are designed for a permanent trouble-free electrical termination.

AL9CU

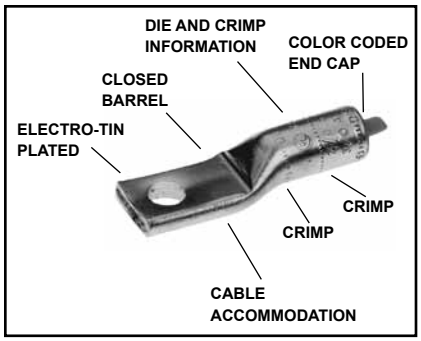

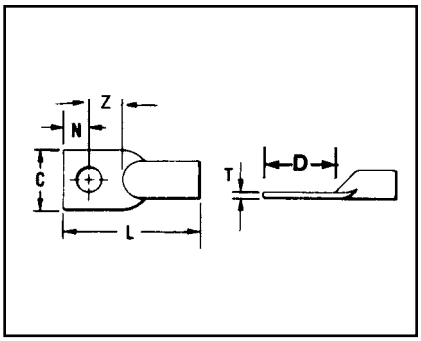

Features & Benefits

- Manufactured from high conductivity, wrought aluminum with heavy duty wall thickness
  - ◊ Provides maximum conductivity, low resistance and ductility for an excellent combination of electrical and crimp forming properties
- Electro-tin plated
  - ◊ Provides durable long lasting corrosion resistance
- Internally beveled barrel
  - ◊ Provides easy cable insertion
- Meets UL486B 90° C requirements
  - ◊ Provides a quality electrical dual connection
- Connector is clearly marked with wire size, die index, color-code and the proper number and location of crimps
  - ◊ Provides easy identification and tooling recommendation for a proper compression which forms a homogeneous mass resulting in an excellent electrical connection
- Factory prefilled with PENETROX™ oxide inhibiting compound
  - ◊ Oxide inhibiting compound contains homogeneously suspended metallic particles to penetrate the wires' oxides, establish electrical continuity and forms an airtight connection
- Color-coded end caps inserted in barrel end
  - ◊ Prevents foreign materials from entering and contaminating the connector prior to usage plus identifies the proper color-coded die for a reliable connection

Catalog Number	Code Conductor •	Stud Size	No. of Holes in Pad	Dimensions C	D	L	N	T	Z	Installation Tooling ▲ Dieless (# of crimps) Mechanical Tooling	Hydraulic HYPRESS™	Y35, Y39, Y750, Y46* Die Number (# of crimps)	Color Code	▲ Die Index	Wire Strip Length
YA12A-TN ‡	12 Str.	#10	1	0.41	0.50	1.19	0.20	0.07	0.30	MR8-27 (1)	—	—	①	—	5/8"
YA10A-TN ‡	10 Str.	#10	1	0.41	0.50	1.22	0.20	0.06	0.30						
YA8CA1	8 AWG	#10	1	0.53	0.60	1.50	0.20	0.09	0.40	MY29-3 (1) MRC840AL (1)	Y81KFT (1) Y81KFTMBH (1) PAT81KFT-18V (1)	U8CABT (1)	Blue	374	5/8"
YA8CA3		1/4	1	0.53	0.75	1.65	0.25	0.09	0.50						
YA6CA1	6 AWG	1/4	1	0.47	0.75	1.84	0.33	0.14	0.42	MY29-3 (1) MRC840AL (1)	MY644HSXT (1) Y81KFT (1) Y81KFTMBH (1) PAT81KFT-18V (1)	U6CABT (1)	Gray	346	3/4"
YA6CA3		3/8	1	0.65	1.19	2.28	0.44	0.09	0.75						
YA4CA1	4AWG	1/4	1	0.47	0.75	2.13	0.33	0.18	0.42	MY29-3 (1) MRC840AL (1)	Y81KFT (1) Y81KFTMBH (1) PAT81KFT-18V (1) Y644HSXT (1)	U4CABT (1)	Green	375	7/8"
YA4CA3		5/16	1	0.80	0.87	2.25	0.41	0.12	0.46						
YA4CA6		3/8	1	0.80	0.94	2.32	0.44	0.12	0.50						

- • Contact BURNDY® for conductor, stud sizes and hole drillings not shown.
- ▲ See tooling section of this catalog for complete tool and die listings.
- ① No color code assigned.
- ‡ UL Listed for Aluminum only.
- * Use PUADP-1 adaptor with U dies in Y46 Hypress™.
- ♦ For applications greater than 2000 Volts consult cable manufacturer for voltage stress relief instructions.

Note: All dimensions shown are for reference only.

Blue highlighted items are industry standard and most frequently ordered.

TYPES YA-A AND YA-A-TN
(Continued)

HYLUG™

UNINSULATED ALUMINUM COMPRESSION TERMINAL
FOR ALUMINUM AND COPPER CONDUCTORS

1-HOLE DESIGN

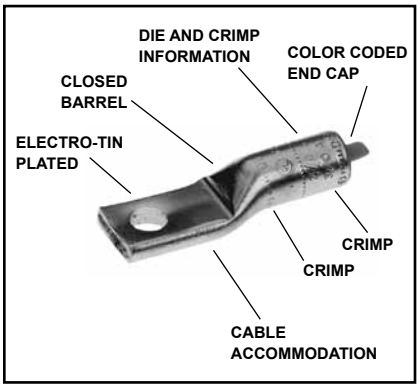

UL Listed 90° C,
600 Volts to 35 kV ♦

AL9CU

Catalog Number	Code Conductor •	Stud Size	No. of Holes in Pad	Dimensions C	D	L	N	T	Z	Installation Tooling ▲ Dieless (# of crimps) Mechanical Tooling	Hydraulic HYPRESS™	Y35, Y39, Y750, Y46* Die Number (# of crimps)	Color Code	▲ Die Index	Wire Strip Length
YA2CA5	2AWG	1/4	1	0.50	0.75	2.25	0.33	0.22	0.42	MY29-3 (1) MRC840AL (1)	Y81KFT (2) Y81KFTMBH (2) Y644HSXT (1) PAT81KFT-18V (2)	U2CABT (1)	Pink	348	1-1/8"
YA2CA1		5/16	1	0.88	0.88	2.50	0.41	0.16	0.47						
YA2CA3		3/8	1	0.88	0.94	2.56	0.44	0.16	0.50						
YA1CA1	1 AWG	3/8	1	0.76	1.19	2.59	0.44	0.19	0.75			U1CART (1)	Gold	471	15/16"
YA25A1	1/0	5/16	1	0.60	0.87	2.31	0.41	0.21	0.46			U25ART (1)	Tan	296	1-1/16"
YA25A3		3/8	1	0.82	1.18	2.67	0.63	0.21	0.55						
YA25A9		1/2	1	1.03	1.34	2.83	0.63	0.17	0.71						
YA26A6	2/0 AWG	3/8	1	0.67	1.89	2.79	0.44	0.24	0.74	MY29-3 (2) MRC840AL (2)		U26ART (2)	Olive	297	1-3/8"
YA26A1		1/2	1	1.03	1.36	3.03	0.63	0.20	0.73						
YA27A1	3/0 AWG	3/8	1	0.73	1.18	2.88	0.44	0.26	0.74			U27ART (2)	Ruby	467	1-1/2"
YA27A3		1/2	1	1.04	1.37	3.27	0.63	0.26	0.74						
YA28A1	4/0 AWG	3/8	1	1.17	1.18	3.26	0.44	0.30	0.74			U28ART (2)	White	298	1-5/8"
YA28A3		1/2	1	1.17	1.36	3.44	0.63	0.30	0.73						
YA29A9	250 kcmil	3/8	1	1.26	0.83	3.09	0.41	0.33	0.42	—		U29ART (2)	Red	324	1-9/16"
YA29A1		1/2	1	1.26	1.36	3.53	0.63	0.33	0.73						1-5/8"
YA30A6	300 kcmil	3/8	1	1.38	1.37	3.90	0.63	0.36	0.74			U30ART (2)	Blue	470	1-3/4"
YA30A1		1/2	1	1.38	1.37	3.90	0.63	0.36	0.74						
YA31A1	350 kcmil	1/2	1	1.52	1.37	4.33	0.63	0.39	0.74	—	Y644HSXT (1) Y81KFT (3) Y81KFTMBH (3) PAT81KFT-18V (3)	U31ART (2)	Brown	299	2-1/8"
YA32A9	400 kcmil	3/8	1	1.62	0.83	3.95	0.41	0.43	0.42	—	Y644HSXT (1) Y81KFT (4) Y81KFTMBH (4) PAT81KFT-18V (4) PAT644XT-18V (2)	U32ART (4)	Green	472	2-5/16"
YA32A1		5/8	1	1.62	1.88	4.92	0.88	0.43	1.00						2-1/2"
YA34A1	500 kcmil	5/8	1	1.80	1.91	5.56	0.88	0.46	1.03			U34ART (4)	Pink	300	2-5/8"
YA36A1	600 kcmil	5/8	1	1.97	1.88	5.82	0.88	0.52	1.00				Black	473	2-7/8"
YA39A1	700-750 kcmil 900 Compact AL+	1/2	1	2.05	1.34	5.26	0.63	0.43	0.71			U39ART-2 (4)	Yellow	936	2-7/8"
YA39A3		5/8	1	2.05	1.88	5.80	0.88	0.43	1.00						
YA39A34	700-750 kcmil	3/4	1	2.05	2.19	6.17	1.00	0.43	1.19						
YA40A1	800 kcmil	5/8	1	1.65	1.87	6.12	0.88	0.60	0.99		Y644HSXTBH (1)	P40ART (4)	Gray	474	3"
YA42A1	900 kcmil AL 600 kcmil CU	1/2	1	2.14	1.36	5.32	0.63	0.39	0.71		Y644HSXT (2) Y644HSXTBH (2) PAT644XT-18V (2)	U42ART (4)^	Gray	303	2-7/8"
YA42A3		5/8	1	2.14	1.36	5.32	0.63	0.39	1.00						
YA44A1	1000 kcmil	5/8	1	2.50	1.89	6.50	0.88	0.66	1.01		—	P44ART** (4)	Gray	474	3"

- • Contact BURNDY® for conductor, stud sizes and hole drillings not shown.
- ▲ See tooling section of this catalog for complete tool and die listings.
- * Use PUADP-1 adaptor with U dies in Y46 HYPRESS™.
- ** P44ART for use with Y46 HYPRESS™ only. PUADP-1 adapter not required.
- + Tested with Y644HSXT and PAT644 dieless tools only and not UL Listed with any tool on 900 Compact Al.
- ♦ For applications greater than 2000 Volts consult cable manufacturer for voltage stress relief instructions.
- ^ U die for 900 AL only

Note: All dimensions shown are for reference only.

Blue highlighted items are industry standard and most frequently ordered.

TYPE YA-A

HYLUG™

UNINSULATED ALUMINUM COMPRESSION TERMINAL FOR ALUMINUM AND COPPER CONDUCTORS

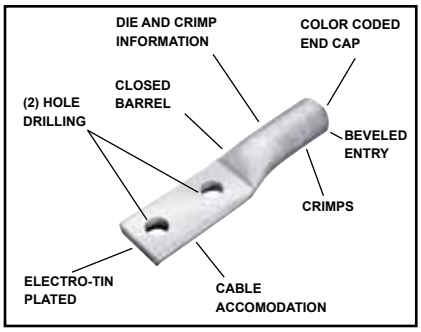

2-HOLE AND 4-HOLE DESIGNS

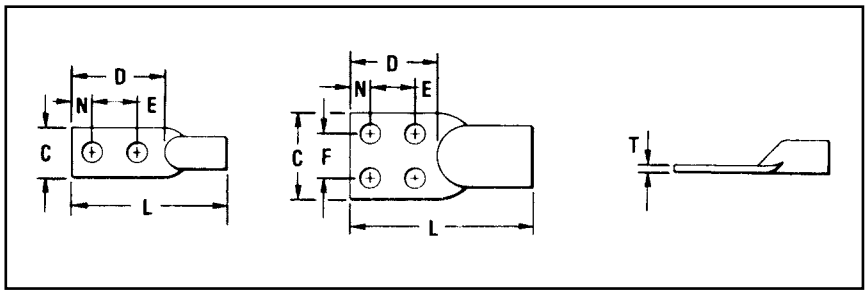

UL Listed 90° C,
600 Volts to 35 kV ♦

Type YA-A 2- and 4-hole pads inhibit connector rotation and increase area contact. These aluminum terminals have the same design features and benefits as the 1-hole YA-A with an added stud hole for a more secure termination to various types of equipment pads. They are dual-rated for use on both aluminum and copper conductors.

AL9CU

Features & Benefits

- Manufactured from high conductivity, wrought aluminum with heavy duty wall thickness
  - ◊ Provides maximum conductivity, low resistance and ductility for an excellent combination of electrical and crimp forming properties
- Electro-tin plated
  - ◊ Provides durable long lasting corrosion resistance
- Internally beveled barrel
  - ◊ Provides easy cable insertion
- Meets UL486B 90° C requirements
  - ◊ Provides a quality electrical dual connection
- Connector is clearly marked with wire size, die index, color-code and the proper number and location of crimps
  - ◊ Provides easy identification and tooling recommendation for a proper compression which forms a homogeneous mass resulting in an excellent electrical connection
- Factory prefilled with PENETROX™ oxide inhibiting compound
  - ◊ Oxide inhibiting compound contains homogeneously suspended metallic particles to penetrate the wires' oxides, establish electrical continuity and forms an airtight connection
- Color-coded end caps inserted in barrel end
  - ◊ Prevents foreign materials from entering and contaminating the connector prior to usage plus identifies the proper color-coded die for a reliable connection

Y644HSXT DIELESS HYPRESS™ RANGE-TAKING CAPABILITIES

The following size HYDENT™ lugs and two way splices, when crimped with the Y644HSXT DIELESS HYPRESS™ tool, produce the following range taking capabilities:

Aluminum Connectors					
Standard Wire Size	Expanded Wire Range	Standard Wire Size	Expanded Wire Range	Standard Wire Size	Expanded Wire Range
#6 AWG	#6 AWG	1/0 AWG	1/0 - #1 AWG	250 kcmil	250 kcmil - 1/0 AWG
#4 AWG	#4 - #6 AWG	2/0 AWG	2/0 - #1 AWG	300 kcmil	300 kcmil - 2.0 AWG
#2 AWG	#2 - #6 AWG	3/0 AWG	3/0 - #1 AWG	350 kcmil	350 kcmil - 3/0 AWG
#1 AWG	#1 - #2 AWG	4/0 AWG	4/0 - #1 AWG	400 kcmil	400 kcmil - 4/0 AWG
				500 kcmil	500 kcmil - 4/0 AWG
				600 kcmil	600 - 250 kcmil
				750 kcmil	750 - 500 kcmil

Blue highlighted items are industry standard and most frequently ordered.

TYPE YA-A

HYLUG™

UNINSULATED ALUMINUM COMPRESSION TERMINAL FOR ALUMINUM AND COPPER CONDUCTORS

2-HOLE AND 4-HOLE DESIGNS

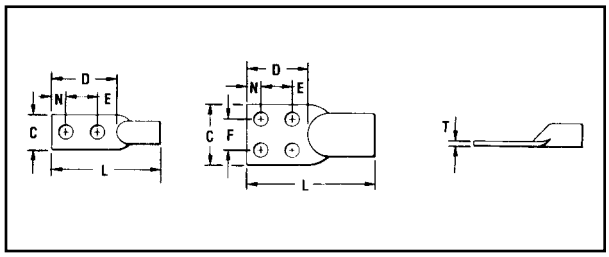

UL Listed 90° C,
600 Volts to 35 kV ♦

AL9CU

Catalog Number	Code Conductor	• Stud Size	• No. of Holes in Pad	Dimensions C	D	E & F	L	N	T REF.	Z MIN.	Installation Tooling ▲ Dieless (# of crimps) Mechanical Tooling	Hydraulic HYPRESS	Y35, Y39, Y750, Y46* Die Number (# of crimps)	Color Code	▲ Die Index	Wire Strip Length
YA2CA9	2 str.	1/2	2	0.88	3.11	1.75	4.73	0.63	0.16	0.73	MY29-3 (1)	Y644HSXT (1) Y81KFT (1) Y81KFTMBH (1) PAT81KFT-18V (1)	U2CABT (1)	Pink	348	1-1/8"
YA25A5	1/0 str	3/8	2	0.82	2.24	1.06	3.73	0.63	0.21	0.55	MY29-3 (1)	Y644HSXT (1) Y81KFT (2) Y81KFTMBH (2) PAT81KFT-18V (2)	U25ART (1)	Tan	296	1-1/16"
YA25A7		1/2		1.03	3.10	1.75	4.59	0.63	0.17	0.72						
YA26A3	2/0 str.	1/2		1.03	3.11	1.75	4.78	0.63	0.20	0.73	MY29-3 (2)		U26ART (2)	Olive	297	1-3/8"
YA26A5		3/8		0.92	1.89	1.00	3.56	0.44	0.24	0.45						
YA27A5	3/0 str.	1/2		1.04	3.12	1.75	3.02	0.63	0.26	0.74			U27ART (2)	Ruby	467	1-1/2"
YA27A7		3/8		1.04	1.89	1.00	3.79	0.44	0.26	0.45						
YA28A5	4/0 str.	1/2		1.17	3.11	1.75	5.19	0.63	0.30	0.73			U28ART (2)	White	298	1-5/8"
YA28A7		3/8		1.17	1.89	1.00	3.97	0.44	0.30	0.45						
YA29A3	250 kcmil	1/2		1.26	3.11	1.75	5.28	0.63	0.33	0.73	—		U29ART (2)	Red	324	1-5/8"
YA29A5		3/8		1.26	1.89	1.00	4.06	0.44	0.33	0.45						
YA30A3	300 kcmil	1/2		1.38	3.11	1.75	5.64	0.63	0.36	0.73			U30ART (2)	Blue	470	1-3/4"
YA30A5		3/8		1.38	1.89	1.00	4.42	0.44	0.36	0.45						
YA31A5	350 kcmil	3/8	2	1.52	1.89	1.00	4.85	0.44	0.39	0.45	—	Y644HSXT (1) Y81KFT (3) Y81KFTMBH (3) PAT81KFT-18V (3)	U31ART (2)	Brown	299	2-1/8"
YA31A3		1/2		1.52	3.11	1.75	6.07	0.63	0.39	0.73						
YA32A5	400 kcmil	3/8		1.62	1.89	1.00	4.93	0.44	0.43	0.45			U32ART (4)	Green	472	2"
YA32A3		1/2		1.62	3.11	1.75	6.15	0.63	0.43	0.73	—	Y644HSXT (1) Y81KFT (4) Y81KFTMBH (4) PAT81KFT-18V (4)				
YA34A3	500 kcmil	1/2		1.62	3.15	1.75	6.80	0.63	0.46	0.77			U34ART (4)	Pink	300	2-5/8"
YA34A5		3/8		1.80	1.89	1.00	5.54	0.44	0.46	0.45						
YA36A3	600 kcmil	1/2		1.62	3.15	1.75	7.09	0.63	0.52	0.77			U36ART (4)	Black	473	2-7/8"
YA36A5		3/8		1.97	1.89	1.00	5.64	0.69	0.52	0.45						
YA39A5	700/750 kcmil 900 Compact AL +	1/2		1.62	3.15	1.75	7.07	0.63	0.43	0.77			U39ART-2 (4)	Yellow	936	2-7/8"
YA39A7		3/8		2.05	1.89	1.00	5.81	0.44	0.43	0.45						
YA39AM2		1/2		1.69	3.12	1.75	7.31	0.63	0.57	0.74			P39ART** (4)	Red	301	2-7/8"
YA40A3	800 kcmil	1/2	2	2.25	3.16	1.75	7.41	0.63	0.60	0.78		Y644HSXTBH (1)	P40ART (4)	Gray	474	3"
YA42A5	900 kcmil AL 600 kcmil Cu	1/2	2	1.62	3.13	1.75	7.09	0.63	0.39	0.77	—	Y644HSXT (2) Y644HSXTBH (2) PAT644XT-18V (2)	U42ART (4)^	Gray	303	2-7/8"
YA42A7		3/8		2.14	3.13	1.00	5.96	0.44	0.39	0.45						
YA44A3	1000 kcmil	1/2	2	1.65	3.15	1.75	7.76	0.63	0.55	0.77	—	—	P44ART** (4)	Brown	302	3"
YA45A5^^	1250 kcmil	1/2		2.59	3.12	1.75	7.73	0.63	0.51	0.74						
YA46A3^^	1500 kcmil	1/2		3.08	3.15	1.75	8.73	0.63	0.81	0.77			L46ART (2) ‡	Blue	478	2-3/4"
YA46A5^^		1/2	4	3.08	3.15	1.75	8.73	0.63	0.81	0.77						
YA48A3^^	2000 kcmil	1/2	2	3.57	3.11	1.75	8.49	0.63	0.90	0.73			L48ART (2) ‡	Red	479	4-1/8"

• Contact BURNDY® for conductor, stud sizes and hole drillings not shown.

▲ See tooling section of this catalog for complete tool and die listings.

‡ Use Y60 BHU HYPRESS™ with L46ART and L48ART die sets.

* Use PUADP-1 adaptor with U dies in Y46 HYPRESS™.

** P39ART and P44ART die sets for use with Y46 HYPRESS™ only. PUADP-1 adapter not required.

\+ Tested with Y644HSXT and PAT644 dieless tools only and not UL Listed with any tool on 900 Compact Al.

♦ For applications greater than 2000 Volts consult cable manufacturer for voltage stress relief instructions.

^ U die for 900 AL only

^^ 75°C Rated

Note: All dimensions shown are for reference only.

Blue highlighted items are industry standard and most frequently ordered.

TYPE YA-A-KIT

TRANSFORMER LUG KIT

Each kit contains the UL Listed and CSA Certified AL9CU rated aluminum compression connectors and tongue mounting hardware needed to terminate aluminum or copper cables in “dry type" transformers. The KVA rating gives an approximate cross reference to the appropriate kit.

CONNECTOR

Features & Benefits

- UL Listed AL9CU dual rated compression terminals and CSA Certified
  - ◊ Ensure the transformer feeders and taps are terminated properly
- Plated steel cap screws and hex nuts with captive conical washers or individual Belleville washers
  - ◊ Terminal to bus connections are made using proper hardware resulting in true torque to pres sure performance, compensates for dissimilar metal expansion and contraction
- Hardware packed in plastic bag
  - ◊ No lost hardware prior to installation

Catalog Number	KVA		Terminals		Wire Range with Y644HSXT	Bolt		Hardware		Washer	
			Qty.	Cat. No.		Qty.	Size	Qty.	Size	Qty.	Washer
YA-A-KIT1	15-37.5	1Ø	8	YA2C-A5	#6-2 AWG	8	1/4-20 X 3/4	8	1/2 x 20HN	Captive	
	15-45.3	3Ø	4	YA30-A7	2/0 AWG-300 kcmil						
YA-AKIT2	50-75	1Ø	12	YA30-A7	2/0 AWG-300 kcmil	8	1/4-20 X 3/4	16	1/4 X 20HN	Captive	
	75-112.5	3Ø				8	1/4-20 X 2				
YA-AKIT3	100-167	1Ø	3	YA30-A7	2/0 AWG-300 kcmil	3	1/4-20 X 3/4	3	1/4 X 20	Captive	
	150-300	3Ø	22	YA39-A1	500-750 kcmil	16	1/2-13 X 2	16	1/2-13	16	1/2 Belleville

HH- Hex Head
HN- Hex Nut
See Mechanical section for set screw terminal kits.
Note: All dimensions shown are for reference only.

TYPE AYP, AYPO

HYPLUG™

FOR ALUMINUM AND COPPER CONDUCTOR

UL Listed 90° C,
600 Volts to 35 kV ♦

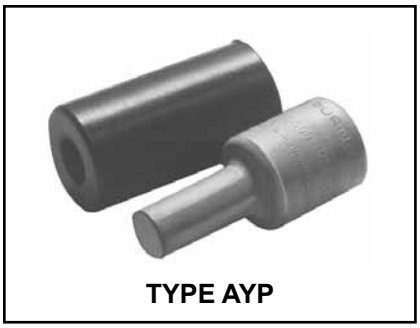

TYPE AYP

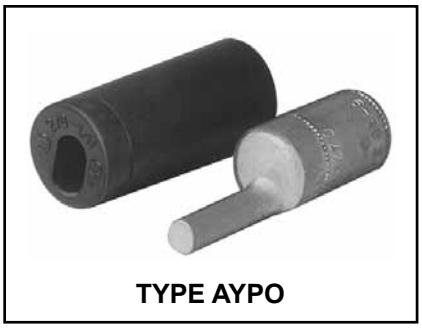

TYPE AYPO

Types AYP and AYPO aluminum compression adapters are designed for reliable termination of aluminum and copper conductor in mechanical connectors. Typical applications include mechanical connectors in molded case circuit breakers, panel board equipment and meter sockets.

AL9CU AL9

Features & Benefits

- All-aluminum electro-tin plated design
  - ◊ Eliminates possible bi-metallic corrosion and provides the shortest connector length design possible
- Shortest connector length design possible
  - ◊ Permits easy installation in equipment with limited working space
- Solid electro-tin plated aluminum plug
  - ◊ Proper electrical connection made easily. Eliminates "how tight is tight" problem
- Smooth surface on the solid EC aluminum electro-tin plated plug
  - ◊ Provides greater area contact establishing excellent electrical conductivity
- Solid plug has same diameter as current carrying equivalent copper wire
  - ◊ Permits use of larger aluminum wire to connect equipment
- Offset plug design available in sizes 2/0 through 750 kcmil
  - ◊ Provides flexibility and maximizes the use of limited space eliminating interference between conductors and equipment
- Electro-tin plated
  - ◊ Resists corrosion
- Factory prefilled with the proper amount of PENETROX™ joint compound
  - ◊ PENETROX™, BURNDY® oxide inhibiting compound with conductive metallic particles penetrates aluminum oxide between strands and forms an air-tight connection
- EPDM rubber covers are supplied with each connector and are rated for 600 V
  - ◊ Eliminates taping
- Only (5) die sets install the complete line from #6 to 750 kcmil
  - ◊ Lowers inventory requirements and saves money
- Supplied in a plastic convenience pack
  - ◊ The cover and connector are kept together and free of foreign material until used
- Connectors are clearly marked with catalog number, wire size, and color coded die index
  - ◊ Provides clear, easy to use information to lower installed cost

♦ For applications greater than 2000 Volts consult cable manufacturer for voltage stress relief instructions.

Y644HSXT DIELESS HYPRESS™ RANGE-TAKING CAPABILITIES

The following HYPLUG™ lugs and two way splices, when crimped with the Y644HSXT DIELESS HYPRESS™ tool, produce the following range-taking capabilities for Aluminum Conductor only:

Aluminum Connectors Only					
Standard Wire Size	Expanded Wire Range	Standard Wire Size	Expanded Wire Range	Standard Wire Size	Expanded Wire Range
#6 AWG	#6 AWG	1/0 AWG	1/0 - #1 AWG	250 kcmil	250 kcmil - 1/0 AWG
#4 AWG	#4 - #6 AWG	2/0 AWG	2/0 - #1 AWG	300 kcmil	300 kcmil - 2.0 AWG
#2 AWG	#2 - #6 AWG	3/0 AWG	3/0 - #1 AWG	350 kcmil	350 kcmil - 3/0 AWG
#1 AWG	#1 - #2 AWG	4/0 AWG	4/0 - #1 AWG	400 kcmil	400 kcmil - 4/0 AWG
				500 kcmil	500 kcmil - 4/0 AWG
				600 kcmil	600 - 250 kcmil
				750 kcmil	750 - 500 kcmil

Blue highlighted items are industry standard and most frequently ordered.

TYPES AYP, AYPO

HYPLUG™

FOR ALUMINUM AND COPPER CONDUCTOR

UL Listed 90° C,
600 Volts to 35 kV♦

AL9CU AL9

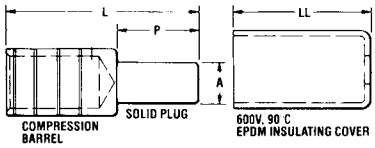

Fig 1: TYPE AYP (Straight)

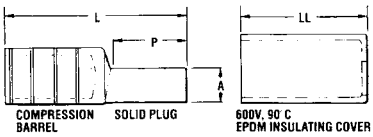

Fig 2: TYPE AYPO (Offset)

Catalog Number	Copper & Aluminum Conductor	Fig. No.	Dimensions: A▼ Plug Dia.	P Plug Length	L HYPLUG Length	LL Cover Length	Installation Tooling▲ HYTOOLS: Dieless Tools (# of crimps)	+ OH25	+ MD6	Y35, Y39, Y750, Y46*: Die Number (# of crimps)	Color Code	▲ Die Index & Embossment	Wire Strip Length
AYP6	6 Str.	1	0.23	0.68	1.85	2.03	MY29-3 (2) ** + Y644HSXT (1) Y81KFT (1) Y81KFTMBH (1) PAT81KFT-18V (1)	1 crimp	W241	U25ART (1)	Tan	296	1-1/16"
AYP4	4 Str.	1	0.23	0.68	1.85	2.03							
AYP2	2 Str.	1	0.23	0.68	1.85	2.03							
AYP1	1 Str.	1	0.26	0.84	2.01	2.03							
AYP1/0	1/0 Str.	1	0.29	0.84	2.01	2.03							
AYPO2/0	2/0 Str.	2	0.33	1.09	2.70	2.23	MY29-3 (2) ** + Y644HSXT (1) Y81KFT (2) Y81KFTMBH (2) PAT81KFT-18V (2)	—	—	U28ART (2)	White	298	1-1/8"
AYPO3/0	3/0 Str.	2	0.37	1.22	2.80	2.23							
AYPO4/0	4/0 Str.	2	0.42	1.22	2.80	2.23							
AYP250	250 kcmil	1	0.47	1.22	2.63	2.54	Hydraulic: Y644HSXT (1) Y81KFT (2) Y81KFTMBH (2) PAT81KFT-18V (2)	—	—	U31ART (2)	Brown	299	1-1/8"
AYPO250	250 kcmil	2	0.47	1.22	2.98	2.54							
AYPO300	300 kcmil	2	0.53	1.34	3.08	2.54							
AYP350	350 kcmil	1	0.57	1.34	2.75	2.54							
AYPO350	350 kcmil	2	0.57	1.34	3.08	2.54							
AYPO400	400 kcmil	2	0.63	1.60	3.43	2.81				U34ART (2)	Pink	300	1-1/8"
AYP500	500 kcmil	1	0.68	1.60	3.08	2.81							
AYPO500	500 kcmil	2	0.68	1.60	3.43	2.81							
AYPO600	600 kcmil	2	0.73	1.64	4.02	3.69	Y644HSXT (1) Y81KFT (3) Y81KFTMBH (3) PAT81KFT-18V (3)	—	—	U39ART-2 (3)	Yellow	936	1-3/4"
AYP750	700/750 kcmil 900 Compact AL†	1	0.81	1.76	3.79	3.69							
AYPO750	700/750 kcmil 900 Compact AL†	2	0.81	1.76	4.16	3.69							

Scratch brush aluminum conductor before installation.
▲ See tooling section of this catalog for complete tool and die listings.
** For MY29-3 use aluminum index plate at 1/0 setting for sizes #6 through 1/0 or at 4/0 setting for sizes 2/0 through 4/0.
+ Not UL Listed with these tools.
* Use PUADP-1 adaptor with U dies in Y46 HYPRESS™.
■ Also accomodates compressed and compact conductors (except for 700 kcmil in 750 kcmil barrel).
† Tested with Y644HSXT and PAT644XT-18V dieless tools only and not UL Listed with any tool on 900 Compact Al.
♦ For applications greater than 2000 Volts consult cable manufacturer for voltage stress relief instructions.
Note: All dimensions shown are for reference only.
▼ For copper equivalent wire size see page O-11 (Aluminum 1350 Cable).
Note: CSA certified for AL Conductor only.

Blue highlighted items are industry standard and most frequently ordered.

TYPE YS-A

HYLINK™

UNINSULATED ALUMINUM COMPRESSION SPLICE

UL Listed 90° C,
600 Volts to 35 kV ♦

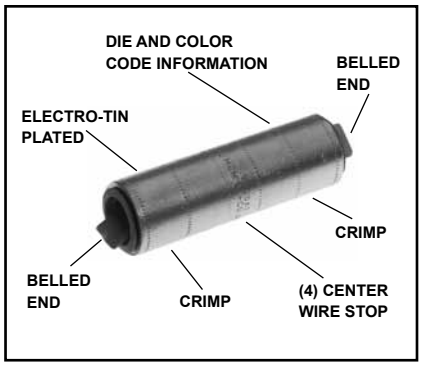

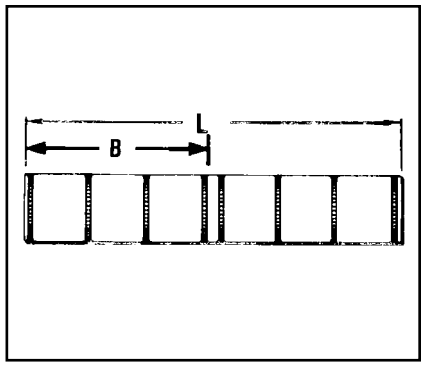

Type YS-A is a high-conductivity aluminum tin-plated compression butt splice for use on all combinations of aluminum to aluminum, aluminum to copper, and copper to copper conductor combinations.

They are designed to accommodate conductors from #12 str. through 1,000 kcmil in standard and heavy duty applications. Prefilled with PENETROX™ oxide inhibiting compounds and assembled with color-coded end caps, the connectors provide a permanent trouble-free electrical splice with flexibility and low installed cost.

Features and Benefits

- Manufactured from high-conductivity wrought aluminum with heavy duty wall thickness
  - ◊ Provides high-conductivity/low resistance and ductility for an excellent combination of electrical and crimp forming properties
- Electro-tin plated
  - ◊ Provides durable long lasting corrosion resistance
- Internally beveled barrel
  - ◊ Provides easy cable entry
- Solid center stop and prefilled with PENETROX™ oxide inhibiting compound
  - ◊ Provides stop for proper conductor insertion and an aid in forcing the PENETROX™ between the individual wire strands
- Color-coded end caps
  - ◊ Provides easy wire size and die code identification plus prevents foreign materials from entering and contaminating the connector prior to usage
- Connector is clearly marked with wire size, die index and the proper number and location of crimps
  - ◊ Provides easy identification and tooling recommendation. Proper compression forms a homogeneous mass resulting in an excellent electrical connection

Catalog Number	Code ● Conductor	Dimensions B	Dimensions L	Installation Tooling ▲ Dieless (# of crimps/end) Mechanical HYTOOL™	Dieless (# of crimps/end) Hydraulic HYPRESS™	Y35, ■Y39, Y750, Y46* Die Number (# of crimps per end)	Y35, ■Y39, Y750, Y46* Color Code	▲ Die Index & Embossment	Wire Strip Length
YS12AG1 ‡	#12 Str.	0.45	1.03	Ratchet: MR8-27 (1)	—	—	①	—	5/8"
YS10WAG1 ‡	#10 Sol.	0.50	1.12						
YS8CA1	8 Str.	0.59	1.44	MY29-3 (1) MRC840AL (1)	Y644HSXT (1) Y81KFT (1) Y81KFTMBH (1) PAT81KFT-18V (1)	U8CABT (1)	Blue	374	5/8"
YS6CA1	6 Str.	0.72	1.70			U6CABT (1)	Gray	346	3/4"
YS4CA1	4 Str.	0.86	1.97			U4CABT (1)	Green	375	7/8"
YS2CA1	2 Str.	1.09	2.44	MY29-3 (1) MRC840AL (1)	Y644HSXT (1) Y81KFT (2) Y81KFTMBH (2) PAT81KFT-18V (2)	U2CABT (1)	Pink	348	1-1/8"
YS1CA1	1 Str.	0.90	2.05			U1CART (1)	Gold	471	15/16"
YS25A1	1/0 Str.	1.06	2.37			U25ART (1)	Tan	296	1-1/16"

▲ See tooling section of this catalog for complete tool and die listing.
① No color code assigned.
‡ UL Listed for Aluminum only. Not CSA Certified.

* Use PUADP-1 adaptor with U dies in Y46 HYPRESS™.
■ The largest size for the Y35 is 400 kcmil.
♦ For applications greater than 2000 Volts consult cable manufacturer for voltage stress relief instructions.

● Also accomodates compressed and compact conductors (except for 700 kcmil in 750 kcmil barrel).
Note: All dimensions shown are for reference only.

Blue highlighted items are industry standard and most frequently ordered.

TYPE YS-A
(Continued)

HYLINK™

UNINSULATED ALUMINUM COMPRESSION SPLICE

UL Listed 90° C,
600 Volts to 35 kV ♦

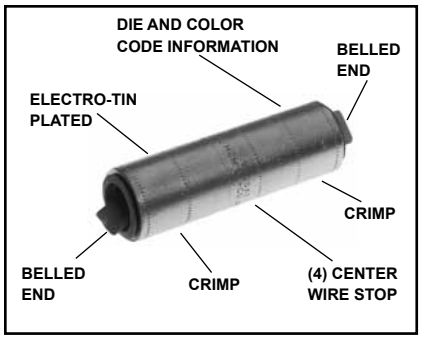

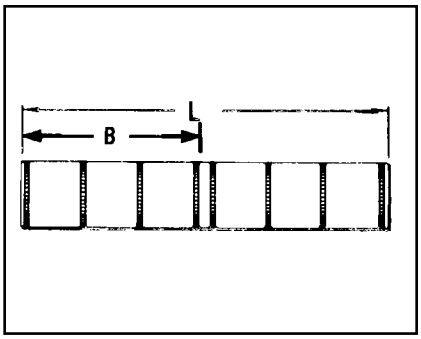

Catalog Number	Code ● Conductor	Dimensions B	Dimensions L	Installation Tooling ▲ Dieless (# of crimps/end) Mechanical HYTOOL™	Dieless Hydraulic HYPRESS™	Y35, ■Y39, Y750, Y46* Die Number (# of crimps per end)	Color Code	▲ Die Index & Embossment	Wire Strip Length
YS26A1	2/0 str.	1.18	2.61	MY29-3 (2) MRC840AL (2)	Y644HSXT (1) Y81KFT (2) Y81KFTMBH (2) PAT81KFT-18V (2)	U26ART (2)	Olive	297	1-3/8"
YS27A1	3/0 str.	1.31	2.88			U27ART (2)	Ruby	467	1-1/2"
YS28A1	4/0 str.	1.40	3.06			U28ART (2)	White	298	1-5/8"
YS29A1	250kcmil	1.46	3.18	MY29-3 (2)		U29ART (2)	Red	324	1-5/8"
YS30A1	300 kcmil	1.47	3.20			U30ART (2)	Blue	470	1-3/4"
YS31A1	350 kcmil	1.89	4.04	—	Y644HSXT (1) Y81KFT (3) Y81KFTMBH (3) PAT81KFT-18V (3)	U31ART (2)	Brown	299	2-1/8"
YS32A1	400kcmil	2.30	4.86	—	Y644HSXT (1) Y81KFT (4) Y81KFTMBH (4) PAT81KFT-18V (4)	U32ART (2)	Green	472	2-1/2"
YS34A1	500 kcmil	2.38	5.02	—		U34ART (2)	Pink	300	2-5/8"
YS36A1	600 kcmil	2.44	5.14	—		U36ART (4)	Black	473	2-7/8"
YS39A1*	700/750 kcmil 900 Compact Al †	2.50	5.26	—		U39ART-2 (4)	Yellow	936	2-7/8"
YS39AM1*	700/750 kcmil 900 Compact Al †	2.63	5.58	—		P39ART** (4)	Red	301	2-7/8"
YS42A1	600 - 900 kcmil	2.50	5.26	—	Y644HSXT (2) PAT644HSXT (2)	U42ART (4) ^	Gray	—	2-7/8"
YS44A1^^	1000 kcmil	2.84	5.94	—	—	P44ART** (4)	Brown	302	3"
YS45A1^^	1250 kcmil	2.84	6.21	—	—	P48PR1/L44ART** (6)	Brown	302	2.88"
YS46A1^^	1500 kcmil	3.40	7.05	—	—	L46ART*** (2)	Blue	478	3.38"
YS47A1^^	1750 kcmil	3.99	8.31	—	—	L47ART*** (2)	White	587	4"
YS48A1^^	2000 kcmil	3.66	7.58	—	—	L48ART*** (2)	Red	479	3.63"
YS483A1^^	2250 kcmil ALUMINUM ONLY	3.66	7.58	—	—	L48ART*** (2)	Red	479	3.63"

▲ See tooling section of this catalog for complete tool and die listings.
‡ UL Listed for Aluminum only. Not CSA Certified.
* Use PUADP-1 adaptor with U dies in Y46 HYPRESS™.
** P39ART and P44ART for use with Y46 HYPRESS™ only. PUADP-1 adapter not required.
■ The largest size for the Y35 is 400 kcmil.
*** Y60BHU only.
90° C Rated.
† Tested with Y644HSXT and PAT644XT-18V dieless tools only and not UL Listed with any tool on 900 Compact Al.
● Also accommodates compressed and compact conductors. (Except 700 kcmil in 750 kcmil barrel)
Note: All dimensions shown are for reference only.
^ U Die for 900 AL only.
^^ 75° C Rated.

Y644HSXT DIELESS HYPRESS™ RANGE-TAKING CAPABILITIES

The following HYLINK™ splices, when crimped with the Y644HSXT DIELESS HYPRESS™ tool, produce the range-taking capabilities in the table to the right.

Aluminum Splices					
Standard Wire Size	Expanded Wire Range	Standard Wire Size	Expanded Wire Range	Standard Wire Size	Expanded Wire Range
#6 AWG	#6 AWG	1/0 AWG	1/0 - #1 AWG	250 kcmil	250 kcmil - 1/0 AWG
#4 AWG	#4 - #6 AWG	2/0 AWG	2/0 - #1 AWG	300 kcmil	300 kcmil - 2.0 AWG
#2 AWG	#2 - #6 AWG	3/0 AWG	3/0 - #1 AWG	350 kcmil	350 kcmil - 3/0 AWG
#1 AWG	#1 - #2 AWG	4/0 AWG	4/0 - #1 AWG	400 kcmil	400 kcmil - 4/0 AWG
				500 kcmil	500 kcmil - 4/0 AWG
				600 kcmil	600 - 250 kcmil
				750 kcmil	750 - 500 kcmil

Blue highlighted items are industry standard and most frequently ordered.

TYPE YS-AT

HIGH VOLTAGE UNINSULATED ALUMINUM COMPRESSION SPLICE

Type YS-AT is a high-conductivity aluminum electro-tin plated compression butt splice with tapered ends for high voltage applications up to 35 kV.

The YS-AT provides the same benefits as the YS-A with the addition of tapered ends for easy installation of high voltage insulating kits. Tapered ends aid in preventing corona emission and insulation breakdown. Recommended for high voltage splice applications.

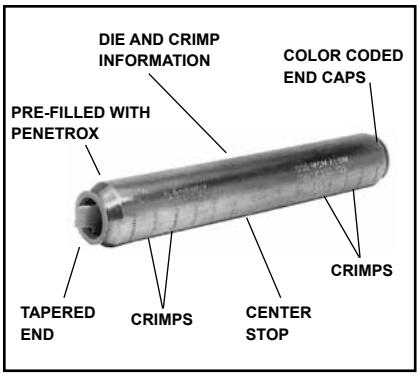

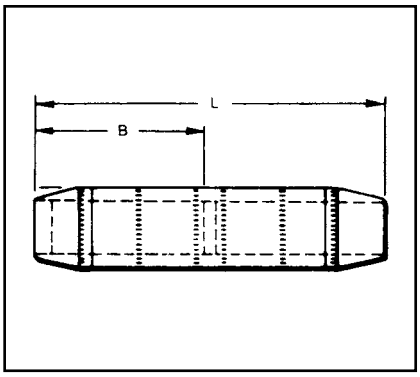

Features & Benefits

- Tapered ends for applications through 35kV
  - ◊ Permits easy taping and aids in preventing corona emission and insulation breakdown
- Heavy wall aluminum tubing
  - ◊ For use with combinations of AL-AL, AL-CU, CU-CU

Catalog Number	● † Code Conductor	Dimensions		Installation Tooling ▲				Wire Strip Length
				Y35, ■ Y39, Y750, Y46*				
		B	L	Die Number	(Crimps per End)	Color Code	Die Index & Embossment ▲	
YS2CAT	2 str.	1.58	4.00	U2CABT	(2)	Pink	348	2 1/4"
YS25AT	1/0 str.	1.96	4.73	U25ART	(2)	Tan	296	2 5/8"
YS26AT	2/0 str.	1.83	4.29	U26ART	(3)	Olive	297	2 3/8"
YS27AT	3/0 str.	2.04	4.69	U27ART	(3)	Ruby	467	2 5/8"
YS28AT	4/0 str.	2.16	5.05	U28ART	(3)	White	298	2 3/4"
YS29AT	250 kcmil	2.29	5.37	U29ART	(3)	Red	324	2 7/8"
YS30AT	300 kcmil	2.54	5.91	U30ART	(3)	Blue	470	3 1/8"
YS31AT	350 kcmil	2.68	6.23	U31ART	(3)	Brown	299	3 3/8"
YS34AT	500 kcmil	3.39	7.79	U34ART	(6)	Pink	300	4 1/8"
YS39AT	700/750 kcmil ● 900 Compact AL ▼	3.69	8.57	P39ART**	(6)	Red	301	4 1/2"
YS44AT	1000 kcmil 900 Compact AL▼	3.77	9.69	P44ART**	(6)	Brown	302	4 3/4"

† Contact BURNDY® for conductor sizes not shown.
* Use PUADP-1 adapter for U dies.
** P39ART and P44ART for use with Y46 HYPRESS™ only. PUADP-1 adapter not required.
■ The maximum size for the Y35 is 400 kcmil.
▲ See tooling section of this catalog for complete tool and die listings.
● Also accommodates compressed and compact conductors (except 700 kcmil in 750 kcmil barrel).
▼ Tested with Y644HSXT and PAT644XT-18V dieless tools only and not UL Listed with any tool on 900 Compact Al.
Note: All dimensions shown are for reference only.

Blue highlighted items are industry standard and most frequently ordered.

TYPE YRB

HYREDUCER™

FOR ALUMINUM TO COPPER AND ALUMINUM TO ALUMINUM

UL Listed 90° C,
600 Volts to 35 kV ♦

HYREDUCER™ type YRB reducer butt splice is designed to splice two different conductor sizes and is UL Listed for aluminum to copper and aluminum to aluminum applications. The outside diameter is held constant to minimize installation dies and is factory prefilled with PENETROX™.

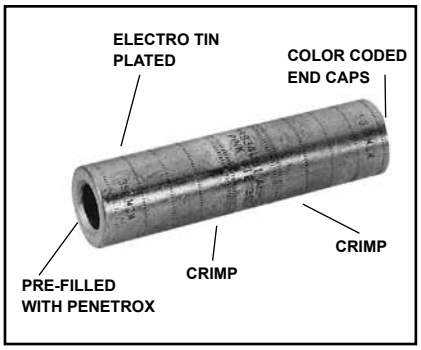

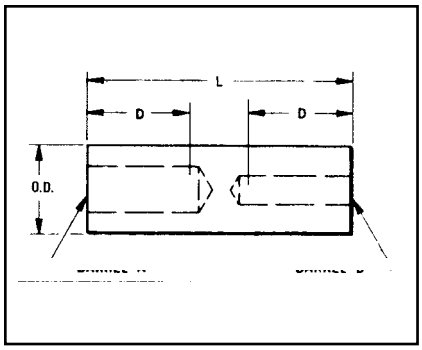

Features & Benefits

- Constant outside diameters. Electro tin-plated
  - ◊ Minimizes installation dies and provides a smooth profile for easy taping and provides durable long lasting corrosion resistance
- Factory prefilled with BURNDY® PENETROX™ oxide inhibiting compound
  - ◊ Contains homogeneously suspended conductive metallic particles which penetrate oxides between conductor strands and forms an air tight connection
- Solid center barrier
  - ◊ Provides center stop for correct cable insertion and aids the thorough penetration of PENETROX™ oxide inhibiting compound between conductor strands
- Connectors are clearly marked with catalog number, wire size, and color-coded die index
  - ◊ Provides clear, easy to use information to lower installed costs
- Each barrel end has a plastic end cap
  - ◊ Keeps the connector barrels free of foreign materials

Catalog Number	Conductor Range ● Aluminum or Copper Size †		Dimensions			Installation Tooling ▲ Hydraulic Tools, Die Sets (No. of Crimps ‡)				Wire Strip Length
	Barrel A	Barrel B	O.D	D	L	Y35 ■, Y39, Y750, Y46*	‡	Die▲ Index	Color Code	
YRB2U4	1 str. 2 str.	4 str. 3 str.	0.65	0.88	2.00	U25ART	(1)	296	Tan	15/16"
YRB25U2	1/0 str.	1 str. 2 str.	0.65	0.88	2.00	U25ART	(1)	296	Tan	15/16"
YRB27U25	3/0 str.	1/0 str.	0.85	1.36	3.31	U28ART	(2)	298	White	1-7/16"
YRB27U26	3/0 str.	2/0 str.	0.85	1.36	3.31	U28ART	(2)	298	White	1-7/16"
YRB28U26	4/0 str.	2/0 str.	0.85	1.36	3.31	U28ART	(2)	298	White	1-7/16"
YRB29U28	250 kcmil	4/0 str.	1.11	1.73	4.21	U31ART	(2)	299	Brown	1-13/16"
YRB31U28	350 kcmil	4/0 str.	1.11	1.73	4.21	U31ART	(2)	299	Brown	1-13/16"
YRB31U29	350 kcmil	250 kcmil	1.11	1.73	4.21	U31ART	(2)	299	Brown	1-13/16"
YRB34U31	500 kcmil	350 kcmil	1.31	2.11	5.12	U34ART	(4)	300	Pink	2-3/16"
YRB36U31	600 kcmil	350 kcmil	1.46	2.25	5.57	U39ART-2	(4)	936	Yellow	2-5/16"
YRB36U34	600 kcmil	500 kcmil	1.46	2.25	5.57	U39ART-2	(4)	936	Yellow	2-5/16"
YRB39U34	700/750 kcmil ● 900 Compact AL ▼	500 kcmil	1.46	2.25	5.57	U39ART-2	(4)	936	Yellow	2-5/16"
YRB39U36	700/750 kcmil ● 900 Compact AL ▼	600 kcmil	1.46	2.25	5.57	U39ART-2	(4)	936	Yellow	2-5/16"

† Contact BURNDY® for conductor sizes not shown.
▲ See tooling section of this catalog for complete tool and die listings.
‡ Number of crimps.
* Use PUADP-1 adaptor with U dies shown in Y46 HYPRESS™.
■ The maximum size for the Y35 is 400 kcmil.
♦ For applications greater than 2000 Volts consult cable manufacturer for voltage stress relief instructions.
● Also accommodates compressed and compact conductors (except 700 kcmil in 750 kcmil barrel).
▼ Tested with Y644HSXT and PAT644XT-18V dieless tools only and not UL Listed with any tool on 900 Compact Al.
Note: All dimensions shown are for reference only.

Blue highlighted items are industry standard and most frequently ordered.

TYPES YFD, YFN,YFO AND YFR

H-CRIMPIT™

UNINSULATED ALUMINUM COMPRESSION TAP CONNECTOR

FOR ALUMINUM TO COPPER AND ALUMINUM TO ALUMINUM

UL Listed 90° C,
600 Volts to 35 kV ♦

H-CRIMPIT™ compression tap connectors Types YFD, YFN, YFO and YFR are for use with aluminum to aluminum and aluminum to copper connections.

The H-CRIMPIT™ is ideal for making both parallel and tap compression connections in risers and gutters. It should only be installed with hydraulic tools.

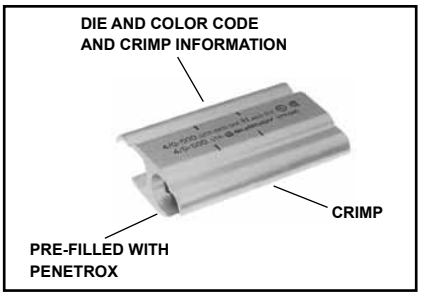

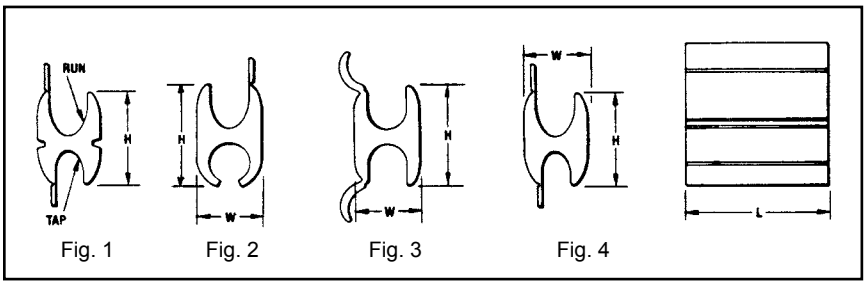

Fig. 1 Fig. 2 Fig. 3 Fig. 4

Features & Benefits

- Each connector is factory sealed in polyethylene
  - ◊ Maintains the connector free of dirt and foreign materials prior to being used
- When installed the connector has a smooth profile
  - ◊ Easy to tape or to install an insulating CRIMPIT™ cover (See Types CFA, CFA-FR) thereby lowering installed costs
- Connectors are marked with color-codes to match installation die
  - ◊ Easy die selections lower installed cost
- UL 486B Listed
  - ◊ Provides a quality electrical connection

Accommodates ②						Catalog Number	Fig. #	H [mm]	L [mm]	W [mm]	Installation Tooling ▲							Wire Strip Length
Copper or Aluminum		Compact		Dia. Range							▲ Die Index	Color Code	Hydraulic Tools, Die Sets (No. of Crimps)			Dieless Tools Die Adaptor, (No. of Crimps)		
Run	Tap	Run	④ Tap	Run	Tap								Y750, Y35 Y39	Y46 ③	( )	Y644HSXT, Y644MBH		
1/0-6 Str	1-6 Str	2/0-6	1-6 Str	0.398 - 0.162	0.332 - 0.162	**YFO-140***	1	1.15 [29.2]	1.62 [41.1]	0.70 [17.8]	O	Green	UYFO, U-O	UYFO, U-O	(2)	PT30541	(1)	1-7/8"
4/0-1 Str	2/0-1 Str	250-1/0	3/0-1/0	0.563 - 0.338	0.477 - 0.338	**YFD-365***	1	1.42 [36.1]	2.50 [63.5]	0.89 [22.6]	D3	Blue	U-D3, U-YFD	U-D3, U-YFD	(3)	PT30540	(2)	2-3/4"
500-4/0	500-4/0	500-250	500-250	0.815 - 0.522	0.815 - 0.522	**YFN-540**	3	1.82 [46.2]	4.50 [114.3]	1.23 [31.2]	N	Red	U-N U-YFN	P-N P-YFN	(3)	—	—	4-7/8"
900-600	600-350	900-700	600-400	1.1108 - 0.877	0.893 - 0.659	**YFR-865**	4	3.04 [77.2]	4.62 [117.3]	1.74 [44.2]	KR	Yellow	—	P-KR P-YFR	(4)	—	—	5"

▲ See tooling section of this catalog for complete tool and die listings.

† Do not use U-YFN die set with P-UADP-1 adapter in Y46 HYPRESS™. Use P-YFN only.

♦ For applications greater than 2000 Volts consult cable manufacturer for voltage stress relief instructions.

* CSA Listed.

Note: All dimensions shown are for reference only.

Notes:

1 Material: Aluminum.
For Conductor combinations of AL to AL or AL to CU.

② Catalog Number PUADP-1-Adaptor is required to use U type dies in Y46 tools.

③ Other conductors not listed in table can be accommodated as long as the conductor diameter falls within diameter range specified.

④

Blue highlighted items are industry standard and most frequently ordered.

TYPES CFA AND CFA-FR

H-CRIMPIT™ INSULATING COVERS AND FLAME RETARDANT INSULATING COVERS

FOR O, D3, N, AND KR DIE SIZE H-TAP COMPRESSION CONNECTORS

UL Listed to 600 Volts

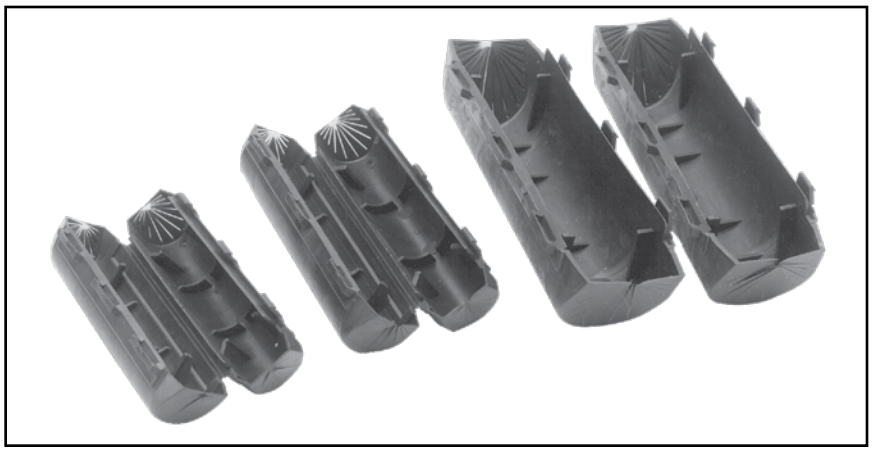

Type CFA insulating covers are made of high impact, high density polyethylene to insulate H-tap CRIMPIT™ compression connectors. Overlapping flash barriers protect both seams against possible electrical flashover. End fingers remain closed or wrap closely around conductors. Multiple latches lock cover closed securely.

Type CFA-FR flame retardant insulating covers are made of high impact, high density polypropylene with a minimum 28 oxygen index. This cover incorporates all the features of the CFA design plus the benefit of self-extinguishing flame retardant properties. Material is UL 94V-O rated.

Both CFA and CFA-FR types are suitable for indoor and outdoor use. Pliable in cool weather application.

Features & Benefits

- One-piece design, no extra parts or hardware required
- Slips over connector and latches securely shut for fast, easy, reliable insulation of H-Tap compression connectors
- Eliminates taping providing economical, fast, easy installation
- Flash barriers protects against electrical flashover
- CFA-FR flame retardant design with minimum 28 oxygen index, UL 94 V-O rated; self-extinguishing flame retardant properties

Catalog Number	Max. Conductor Accommodated	Insulated H-Tap CRIMPIT™ Connectors	Max. Conductor Length	Connector Die Index	Connector Color Code
CFAO-FR	1/0	YFO140	2-1/2"	O	Green
CFAD	4/0	YFD265, YFD365, YFD415	3-1/8"	D	Blue
CFAD-FR					
CFAN	500 kcmil	YFN515, YFN565	2-1/2"	N-Short Connector	Red
CFAN-FR					
CFANL		YFN465, YFN540, YFN615	5-1/2"	N-Long Connector	Red
CFANL-FR					
CFAR*	900 kcmil	YFR715, YFR765, YFR815, YFR865, YFR915	4-7/8"	KR	Yellow
CFAR-FR*					

* Two piece design packaged together.
Note: All dimensions shown are for reference only.

Blue highlighted items are industry standard and most frequently ordered.

TABLE OF CONTENTS

DURIUM™ Hardware
- Bolts D-2
- Nuts D-3
- Flat Washers D-3
- Split Lockwashers D-3
- Internal Tooth Lockwashers D-3

Aluminum Hardware
- Bolts D-4
- Nuts D-4
- Flat Washers D-4
- Split Lockwashers D-4

Galvanized Steel Hardware
- Bolts D-5
- Nuts D-5
- Flatwashers D-5
- Internal Tooth Lockwashers D-5

Stainless Steel Hardware
- Bolts D-6
- Nuts D-6
- Split Lockwashers D-6
- Flat Washers D-6
- Belleville Washers D-7

TMH Terminal Mounting Hardware Kits
- DURIUM™ Silicon Bronze D-8
- Stainless Steel D-8

DURIUM™ U-Bolts D-9

Blue highlighted items are industry standard and most frequently ordered.

HARDWARE DATA

RECOMMENDED TIGHTENING TORQUE

The hardware used in connectors must be compatible with the connector material, have high mechanical strength and be corrosion resistant and correspond to NEMA recommendations.

Copper alloy connectors have hardware made of DURIUM™, which is BURNDY's trade name for silicon bronze alloy ASTMB99 type B. This material was first introduced by BURNDY® in 1927 for use in outdoor construction, and today, is the standard throughout the industry.

DURIUM™ and Steel Hardware		Aluminum Hardware	
Bolt Size	Rec. Torque (Inch Pounds)	Bolt Size	Rec. Torque (Inch Pounds)
1/4 - 20	80	1/2 - 13	300
5/16 - 18	180	5/8 - 11	480
3/8 - 16	240	3/4 - 10	650
1/2 - 13	480		
5/8 - 11	660		
3/4 - 10	1,050		

Aluminum connectors generally have aluminum alloy hardware. The bolts are 2024T4 and anodized to resist corrosion. The nuts are 6061T6, which is resistant to corrosion and does not require anodizing. Both nuts and bolts are lubricated to eliminate galling and to provide consistent clamping forces.

To reduce or greatly exceed the recommended torque can adversely affect the performance of the connector.

DURIUM™ BOLT

SILICON BRONZE

BURNDY® introduced silicon-bronze bolts, nuts and other hardware items on outdoor connector applications in 1927. Today the DURIUM™ trademark is a standard for this use. DURIUM™ bolts combine high strength with corrosion resistance. Heads have American Standard dimension and the threads are per American National Coarse Series, Class #2 fit. The silicon bronze is per ASTM B99.

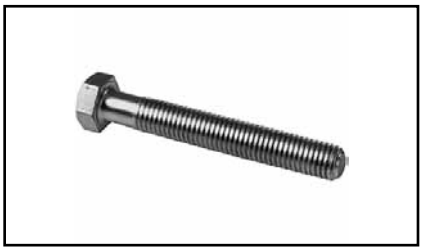

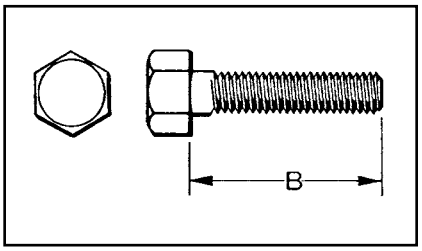

Catalog Number	Thread Size	B Length (Inches)
25x50HEBBOX	1/4-20	1/2
25x62HEBBOX	1/4-20	5/8
25x75HEBBOX	1/4-20	3/4
25x100HEBBOX	1/4-20	1
25x125HEBBOX	1/4-20	1-1/4
25x150HEBBOX	1/4-20	1-1/2
25x200HEBBOX	1/4-20	2
25x250HEBBOX	1/4-20	2-1/2
25x300HEBBOX	1/4-20	3
31x50HEBBOX	5/16-18	1/2
31x62HEBBOX	5/16-18	5/8
31x75HEBBOX	5/16-18	3/4
31x100HEBBOX	5/16-18	1
31x125HEBBOX	5/16-18	1-1/4
31x150HEBBOX	5/16-18	1-1/2
31x175HEBBOX	5/16-18	1-3/4
31x200HEBBOX	5/16-18	2
31x250HEBBOX	5/16-18	2-1/2
31x300HEBBOX	5/16-18	3
38x50HEBBOX	3/8-16	1/2
38x62HEBBOX	3/8-16	5/8
38x75HEBBOX	3/8-16	3/4
38x88HEBBOX	3/8-16	7/8
38x100HEBBOX	3/8-16	1

Catalog Number	Thread Size	B Length (Inches)
38x125HEBBOX	3/8-16	1-1/4
38x150HEBBOX	3/8-16	1-1/2
38x175HEBBOX	3/8-16	1-3/4
38x200HEBBOX	3/8-16	2
38x225HEBBOX	3/8-16	2-1/4
38x250HEBBOX	3/8-16	2-1/2
38x275HEBBOX	3/8-16	2-3/4
38x300HEBBOX	3/8-16	3
38x325HEBBOX	3/8-16	3-1/4
38x350HEBBOX	3/8-16	3-1/2
38x400HEBBOX	3/8-16	4
38x450HEBBOX	3/8-16	4-1/2
38x500HEBBOX	3/8-16	5
44x150HEBBOX	7/16-14	1-1/2
44x200HEBBOX	7/16-14	2
50x75HEBBOX	1/2-13	3/4
50x100HEBBOX	1/2-13	1
50x125HEBBOX	1/2-13	1-1/4
50x150HEBBOX	1/2-13	1-1/2
50x175HEBBOX	1/2-13	1-3/4
50x200HEBBOX	1/2-13	2
50x225HEBBOX	1/2-13	2-1/4
50x250HEBBOX	1/2-13	2-1/2
50x275HEBBOX	1/2-13	2-3/4

Catalog Number	Thread Size	B Length (Inches)
50x300HEBBOX	1/2-13	3
50x325HEBBOX	1/2-13	3-1/4
50x350HEBBOX	1/2-13	3-1/2
50x375HEBBOX	1/2-13	3-3/4
50x400HEBBOX	1/2-13	4
50x450HEBBOX	1/2-13	4-1/2
50x500HEBBOX	1/2-13	5
50x550HEBBOX	1/2-13	4-1/2
50x600HEBBOX	1/2-13	6
62x100HEBBOX	5/8-11	1
62x125HEBBOX	5/8-11	1-1/4
62x150HEBBOX	5/8-11	1-1/2
62x175HEBBOX	5/8-11	1-3/4
62x200HEBBOX	5/8-11	2
62x225HEBBOX	5/8-11	2-1/4
62x250HEBBOX	5/8-11	2-1/2
62x275HEBBOX	5/8-11	2-3/4
62x300HEBBOX	5/8-11	3
62x325HEBBOX	5/8-11	3-1/4
62x350HEBBOX	5/8-11	3-1/2
62x400HEBBOX	5/8-11	4
62x450HEBBOX	5/8-11	4-1/2
62x500HEBBOX	5/8-11	5
62x600HEBBOX	5/8-11	6

Blue highlighted items are industry standard and most frequently ordered.

DURIUM™ NUTS

SILICON BRONZE

DURIUM™ hexagon regular nuts are non-magnetic and are made to American Standard dimensions. American National Coarse Series threads. #2 fit.

Catalog Number	Thread Size
25CHENBOX	1/4-20
31CHENBOX	5/16-18
38CHENBOX	3/8-16
44CHENBOX	7/16-14
50CHENBOX	1/2-13
62CHENBOX	5/8-11

DURIUM™ FLAT WASHERS

SILICON BRONZE

High strength DURIUM™ Flat Washers are non-magnetic and free from galvanic action when in contact with copper. Conforms to SAE standards.

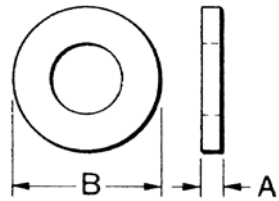

Catalog Number	For Bolt Size	Nominal Dimensions in Inches	
		A	B
25FWBOX	1/4	1/16	5/8
31FWBOX	5/16	1/16	11/16
38FWBOX	3/8	1/16	13/16
44FWBOX	7/16	1/16	15/16
50FWBOX	1/2	3/32	1-1/16
62FWBOX	5/8	3/32	1-5/16

DURIUM™ SPLIT LOCKWASHERS

SILICON BRONZE

DURIUM™ spring type lockwasher has high resiliency and exerts constant pressure on the face of the nut, preventing vibration from loosening the nut.

Catalog Number	For Bolt Size
25SWBOX	1/4
31SWBOX	5/16
38SWBOX	3/8
44SWBOX	7/16
50SWBOX	1/2
62SWBOX	5/8

DURIUM™ INTERNAL TOOTH LOCKWASHERS

SILICON BRONZE

DURIUM™ Internal Tooth Lockwashers are available as illustrated. The teeth are twisted slightly and present biting edges which grip the nut and the part being clamped, preventing the nut from backing off.

Catalog Number	For Bolt Size
25NWBOX	1/4
31NWBOX	5/16
38NWBOX	3/8
44NWBOX	7/16
50NWBOX	1/2
62NWBOX	5/8

Blue highlighted items are industry standard and most frequently ordered.

ALUMINUM HARDWARE

BOLTS

BURNDY® aluminum hexagon head bolts are manufactured of alloy 2024-T4 and are finished with anodic coating and lubricated. Threads are coarse series, class 2A fit.

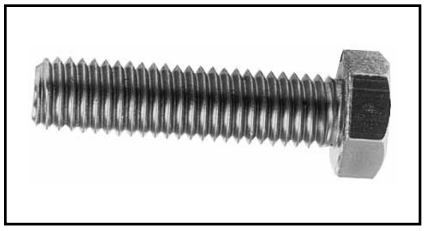

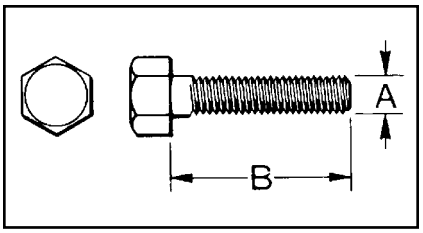

Catalog Number	Thread Size	B Length (Inches)
50x150HABBOX	1/2-13	1-1/2
50x175HABBOX	1/2-13	1-3/4
50x200HABBOX	1/2-13	2
50x225HABBOX	1/2-13	2-1/4
50x250HABBOX	1/2-13	2-1/2
50x275HABBOX	1/2-13	2-3/4
50x300HABBOX	1/2-13	3
50x325HABBOX	1/2-13	3-1/4
50x350HABBOX	1/2-13	3-1/2
50x375HABBOX	1/2-13	3-3/4
50x400HABBOX	1/2-13	4
50x425HABBOX	1/2-13	4-1/4
50x450HABBOX	1/2-13	4-1/2

Catalog Number	Thread Size	B Length (Inches)
50x500HABBOX	1/2-13	5
50x550HABBOX	1/2-13	5-1/2
62x175HABBOX	5/8-11	1-3/4
62x200HABBOX	5/8-11	2
62x225HABBOX	5/8-11	2-1/4
62x250HABBOX	5/8-11	2-1/2
62x300HABBOX	5/8-11	3
62x350HABBOX	5/8-11	3-1/2
62x400HABBOX	5/8-11	4
62x450HABBOX	5/8-11	4-1/2
62x500HABBOX	5/8-11	5
62x550HABBOX	5/8-11	5-1/2
62x600HABBOX	5/8-11	6

NUTS

BURNDY® aluminum nuts are manufactured of alloy 6061-T6, are finished type, coarse thread, class 2B fit.

Catalog Number	Thread Size
50HANBOX	1/2-13
62HANBOX	5/8-11

FLAT WASHERS

BURNDY® aluminum flat washers are manufactured of alloy 2024-T4 and are medium design.

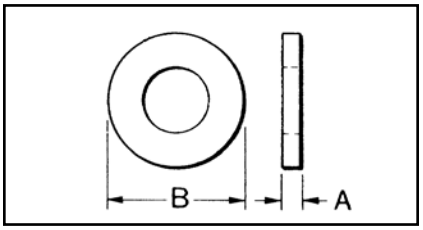

Catalog Number	Description	For Bolt Size
50FWABOX	Flat Washer	1/2
62FWABOX	Flat Washer	5/8

SPLIT LOCKWASHERS

BURNDY® aluminum split lockwashers are manufactured of alloy 7075-T6 and are regular design.

Catalog Number	Description	For Bolt Size
50SWALBOX	Split Washer	1/2
62SWALBOX	Split Washer	5/8

Blue highlighted items are industry standard and most frequently ordered.

GALVANIZED STEEL HARDWARE

Galvanized bolts, nuts, flatwashers, and internal tooth lockwashers are manufactured per ASTM307 Grade A. Nut surfaces and bolt heads have American Standard dimensions, and the threads are per American National Coarse Series, Class #2 fit. Galvanizing is per ASTM A153.

BOLTS

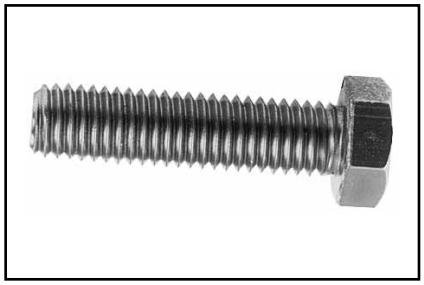

Catalog Number	Thread Size	Length (B)
38x125HGSB	3/8-16	1.25
38x275HGSB	3/8-16	2.75
38x225HGSB	3/8-16	2.25
50x100HGSB	1/2-13	1.00
50x150HGSB	1/2-13	1.50
50x200HGSB	1/2-13	2.00
62X100HGSB	5/8-11	1.00
62x175HGSB	5/8-11	1.75
75X125HGSB	3/4-11	1.25

NUTS

Catalog Number	Thread Size
31CHGSN	5/16-18
38HGSN009	3/8-16
38HGSN	3/8-16
50HGSN	1/2-13
62HGSN	5/8-11

FLAT WASHERS

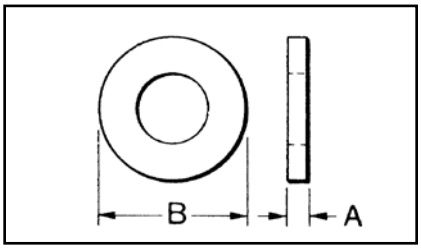

Catalog Number	For Bolt Size	Nominal Dimensions (Inches)	
		I.D.A	O.D.B
38x81FWGS	3/8	0.41	0.81
50x106FWGS	1/2	0.53	1.06

INTERNAL TOOTH LOCKWASHERS

Catalog Number	Bolt Size
38NWGS	3/8
50NWGS	1/2
62NWGS	5/8
75NWGS	3/4

Blue highlighted items are industry standard and most frequently ordered.

STAINLESS STEEL HARDWARE

Stainless steel bolts, nuts, flatwashers and split lockwashers are manufactured from 18-8 non-magnetic material. Nut surfaces and bolt heads have American National Coarse Series, Class #2 fit.

BOLTS

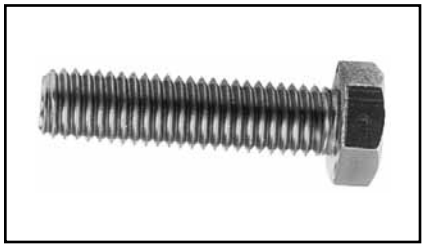

Catalog Number	Thread Size	Length B
38X125HSSB	3/8-16	1-1/4
38x225HSSB	3/8-16	2-1/4
38x250HSSB	3/8-16	2-1/2
38x275HSSB	3/8-16	2-3/4
50x200HSSB	1/2-13	2
50x250HSSB	1/2-13	2-1/2
50x300HSSB	1/2-13	3
62x300HSSB	5/8-11	3

NUTS

Catalog Number	Thread Size
25HSSN	1/4-20
38HSSN	3/8-16
50HSSN	1/2-13
62HSSN	5/8-11

SPLIT LOCKWASHERS

Catalog Number	For Bolt Size
25SWSSLT	1/4
38SWSSMD	3/8
50SWSSMD	1/2
62SWSSMD	5/8

FLAT WASHERS

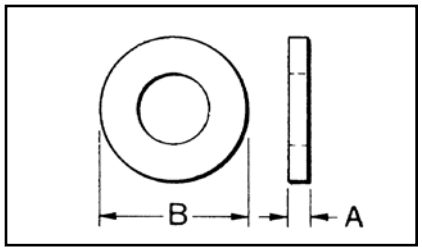

Catalog Number	For Bolt Size	Nominal Dimensions (Inches)	
		I.D.A	O.D.B
25FWSS	1/4	0.27	0.69
38FWSS	3/8	0.41	1.00
50FWSS	1/2	0.59	1.13
62FWSS	5/8	0.66	1.31

Blue highlighted items are industry standard and most frequently ordered.

STAINLESS STEEL HARDWARE

BELLEVILLE WASHERS

Any bolted "pad to flat" electrical connection should include a bolt, two flatwashers, and the nut. In addition, if any of the flat components is aluminum, a properly designed Belleville washer should be interposed between one of the flatwashers and either the bolt head or the nut, with the hollow of the Belleville washer placed against the flat washer. BURNDY® Belleville washers are designed to maintain substantial force when tightened to NEMA-recommended values and finely finished to avoid galling.

Catalog Number	Material	Bolt Size	Nominal Dimensions		
			Thickness	I.D.	O.D.
38x75BWSS	Steel - Stainless	3/8	0.06	0.39	0.75
50x106BWSS	Steel - Stainless	1/2	0.10	0.53	1.06

TYPE TMH

DURIUM™ SILICON BRONZE HARDWARE KITS

Type TMH are DURIUM™ silicon bronze hardware kits. The kits can be ordered for specific applications ensuring the proper type and amount of hardware for each installation. Packaged in separate sealed bags, they are convenient to use, eliminating mismatched quantities. DURIUM™ silicon bronze material provides long lasting corrosion resistance Grade 2.

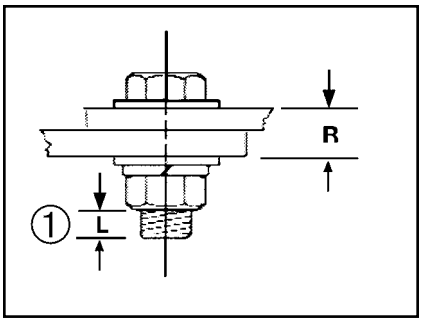

Catalog Number	Size	Each TMH Kit Includes: Bolt Length	Bolt Qty	Flat Washer	Split Washer	Hex Nut	Working Range (R)	Installation Torque (In-lbs)
TMH262	1/4-20	0.75	2	4	2	2	0.09 - 0.34	80
TMH263		1.00	2	4	2	2	0.34 - 0.59	
TMH264		1.25	2	4	2	2	0.59 - 0.84	
TMH265		1.50	2	4	2	2	0.84 - 1.09	
TMH266	3/8-16	0.75	2	4	2	2	0.00 - 0.19	240
TMH267		1.00	2	4	2	2	0.19 - 0.44	
TMH268		1.25	2	4	2	2	0.44 - 0.69	
TMH269		1.50	2	4	2	2	0.69 - 0.94	
TMH270		1.75	2	4	2	2	0.94 - 1.19	
TMH271		2.00	2	4	2	2	1.19 - 1.44	
TMH332 ②		2.75	2	4	2	2	-	
TMH261 †		3.00	2	4	2	2	2.15 - 2.40	
TMH289 ††		1.25	1	2	1	1	0.02 - 0.27	
TMH295	1/2-13	1.25	2	4	2	2	0.27 - 0.49	480
TMH272		1.50	2	4	2	2	0.49 - 0.74	
TMH294		1.75	2	4	2	2	0.74 - 0.99	
TMH69		2.00	2	4	2	2	0.99 - 1.24	

† For use with CUSA750-2TC38 copper spacer adaptor, (2) terminals and °" thick equipment bus bar. For other combinations contact BURNDY®.

†† For use with all GAR-TC connectors. "R" dimension is allowable pad thickness of terminal

* For other combinations contact BURNDY®.

① "L" dimension never exceeds 0.25"

② For use with CUSA442TC38 on 1/4" bus bar and HYLUG™ 4/0 - 750 kcmil.

TYPE TMH-SS

STAINLESS STEEL HARDWARE KITS

Type TMH-SS are stainless steel hardware kits. Just like the standard TMH kits, these kits can be ordered for specific applications ensuring the proper type and amount of hardware for each installation. They are packaged in separate sealed bags and convenient for use and ordering.

Catalog Number	Size	Each TMH Kit Includes: Bolt Length	Bolt Qty	Flat Washer	Split Washer	Hex Nut	Working Range (R)	Installation Torque (In-lbs)
TMH322SS	10-32	0.88	1	0	1	1	-	45
TMH262SS	1/4-20	0.75	2	4	2	2	0.09 - 0.34	80
TMH263SS		1.00	2	4	2	2	0.34 - 0.59	
TMH264SS		1.25	2	4	2	2	0.59 - 0.84	
TMH265SS		1.50	2	4	2	2	0.84 - 1.09	—
TMH267SS	3/8-16	1.00	2	4	2	2	0.19 - 0.44	240
TMH268SS		1.25	2	4	2	2	0.44 - 0.69	
TMH269SS		1.50	2	4	2	2	0.69 - 0.94	
TMH270SS		1.75	2	4	2	2	0.94 - 1.19	
TMH271SS		2.00	2	4	2	2	1.19 - 1.44	
TMH261SS †		3.00	2	4	2	2	2.15 - 2.40	
TMH295SS	1/2-13	1.25	2	4	2	2	0.27 - 0.49	480
TMH272SS		1.50	2	4	2	2	0.49 - 0.74	
TMH294SS		1.75	2	4	2	2	0.74 - 0.99	
TMH69SS		2.00	2	4	2	2	0.99 - 1.24	

Blue highlighted items are industry standard and most frequently ordered.

TYPE UB

DURIUM™ SILICON BRONZE U-BOLTS

DURIUM™ U-BOLTS are specifically designed for electrical connections to pipe and rod. The U-BOLTS are threaded on the straight portion of the legs only allowing for more contact surface on the pipe or rod. American National Coarse Threads Class #2 fit. The silicon bronze is per ASTM B99.

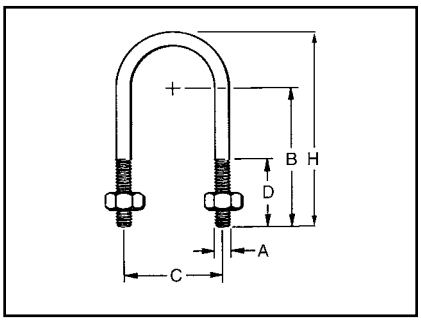

Catalog Number	Thread Size	H	C	D	B
UB101	1/4-20	1.38	0.75	0.75	0.88
UB104	1/4-20	1.81	1.12	0.88	1.12
UB105	1/4-20	2.03	1.31	1.00	1.25
UB106	1/4-20	2.31	1.62	1.12	1.38
UB107	1/4-20	2.66	1.94	1.31	1.56
UB336	3/8-16	1.50	0.88	0.62	0.88
UB178	3/8-16	2.00	0.88	0.75	1.38
UB354	3/8-16	2.44	1.25	1.00	1.62
UB187	3/8-16	2.47	1.16	1.06	1.69
UB271	3/8-16	2.50	1.00	1.19	1.81
UB222	3/8-16	2.69	1.50	1.12	1.75
UB242	3/8-16	2.72	1.16	1.31	1.94
UB383	3/8-16	2.75	0.94	1.47	2.09
UB269	3/8-16	2.78	1.19	1.38	2.00
UB357	3/8-16	2.78	1.69	1.12	1.75
UB384	3/8-16	2.91	1.44	1.38	2.00
UB249	3/8-16	3.00	1.50	1.44	2.06
UB1031	3/8-16	3.31	1.75	1.90	2.25
UB244	3/8-16	3.31	1.75	1.62	2.25
UB199	3/8-16	3.41	2.34	1.44	2.05
UB204	3/8-16	3.47	2.06	1.62	2.25
UB124	3/8-16	3.50	2.75	1.31	1.94
UB268	3/8-16	3.97	2.34	2.00	2.62
UB257	3/8-16	4.16	2.81	1.94	2.56
UB1032	3/8-16	4.41	2.81	2.56	2.81
UB310	3/8-16	4.41	2.81	2.19	2.81
UB266	3/8-16	4.97	3.31	2.50	3.12
UB267	3/8-16	5.53	3.94	2.75	3.38
UB258	3/8-16	5.56	4.00	2.75	3.38
UB264	3/8-16	6.16	4.44	3.12	3.75
UB1033	3/8-16	6.16	4.44	3.50	3.75
UB261	3/8-16	6.34	4.94	3.06	3.69
UB422	3/8-16	7.69	6.00	3.88	4.50
UB1027	3/8-16	8.12	7.12	2.88	4.38
UB1028	3/8-16	9.62	9.12	2.88	4.88
UB1029	3/8-16	11.20	11.25	2.88	5.38

Catalog Number	Thread Size	H	C	D	B
UB1030	3/8-16	12.70	13.25	2.88	5.88
UB224	1/2-13	2.44	1.12	0.88	1.62
UB358	1/2-13	2.66	1.31	1.00	1.75
UB291	1/2-13	2.81	1.19	1.19	1.97
UB293	1/2-13	2.81	1.75	1.75	1.69
UB464	1/2-13	3.12	1.81	1.81	1.96
UB540	1/2-13	3.19	1.38	1.38	2.25
UB254	1/2-13	3.41	1.31	1.31	2.50
UB328	1/2-13	3.41	2.94	2.94	1.69
UB400	1/2-13	4.03	1.31	1.31	3.12
UB230	1/2-13	4.34	2.94	2.94	2.62
UB311	1/2-13	4.44	1.88	1.88	3.25
UB302	1/2-13	4.62	2.47	2.47	3.12
UB232	1/2-13	4.97	3.44	3.44	3.00
UB260	1/2-13	5.34	2.94	2.94	3.62
UB390	1/2-13	5.38	2.50	2.50	3.88
UB263	1/2-13	5.78	4.56	4.56	3.25
UB282	1/2-13	6.31	4.12	4.12	4.00
UB236	1/2-13	6.41	5.06	5.06	3.62
UB399	1/2-13	6.66	1.31	1.31	5.75
UB436	1/2-13	6.66	4.56	4.56	4.12
UB262	1/2-13	6.78	5.06	5.06	4.00
UB392	1/2-13	7.06	1.62	1.62	6.00
UB416	1/2-13	7.53	5.06	5.06	4.75
UB300	1/2-13	7.62	6.12	6.12	4.31
UB306	1/2-13	7.88	6.12	6.12	4.56
UB275	1/2-13	8.16	7.19	3.54	4.31
UB437	1/2-13	8.56	6.12	6.12	5.25
UB294	5/8-11	3.50	1.38	1.38	2.50
UB314	5/8-11	3.66	2.09	2.09	2.31
UB425	5/8-11	3.72	2.31	2.31	2.25
UB317	5/8-11	4.97	1.81	1.81	3.75
UB315	5/8-11	5.56	2.09	2.09	4.19
UB318	3/4-10	4.22	2.44	2.44	2.62
UB344	3/4-10	4.72	1.94	1.94	3.38
UB319	3/4-10	6.34	2.44	2.44	4.75

Blue highlighted items are industry standard and most frequently ordered.

TABLE OF CONTENTS

HYGROUND® Irreversible Compression Grounding

HYGROUND® Features & Benefits	E-5, E-6
Type **YGL-C**	E-7
Type **YGLR-C**	E-8
Type **YGHP-C**	E-9
Type **YGHP-C**	E-10
Type **YGHC-C**	E-11
Type **YGC**	E-12
Type **YSHG**	E-13
Type **YGHR-C**	E-14
Type **YGHR-C**	E-15
Type **YGHA**	E-16
Type **YGA**	E-17
GROUNDTAB	E-18
Type **YGHS**	E-19
Type **YGS**	E-20
Type **YGF**	E-21
Type **YGIB**	E-22, E-23
Type **GSTUD-HY**	E-24
Types **YGT, YTTAG**	E-25
Type **YG-B**	E-26

Lightning Protection Info.

Basic rules for selection are:

1. Must be like material to the conductor.
2. Two bolts to ground rod—minimum, for mechanical.
3. Cable to cable connections can be installed with one bolt, two bolt, or compression means.
4. Cable to steel structure must have 8 in.^{2} contact with steel.
5. Heavy duty stacks—mechanical only.
6. On all connectors with heavy duty stack rating, we must offer 1/16" thick lead plating as an option. The reason is closest 25 ft. to stack opening must use lead coated product.
7. UL 96 Listing.

Blue highlighted items are industry standard and most frequently ordered.

TABLE OF CONTENTS

Mechanical Grounding

Types **KC, K2C** E-27

Type **KCKF** E-28

Types **KC-J, EQC632** E-29

Type **KS** E-29

Types **GKA, KPB** E-30

Types **CL50-1, CL50-1TN, CL** E-31

WILEY PV Solutions E-32, E33

Type **GAR** E-34, E-35

Types **GAR-BU, GAR3902, GAR-RB** E-36

Type **GAR-TC** E-37

Type **GD** E-38

Type **GP** E-39

Type **GK** E-40

BONDIT® Intersystem Bonding E-41

BONDIT® Intersystem Bonding E-42

Water Pipe Grounding E-43 - E-47

Type **GC-A** E-48

Type **GG** E-49

Types **GQ, GX** E-50

Types **GRC, GCRT1/0, GRL** E-51

Braid Information E-52, E-53

Type **B** E-54 - E-56

Types **GB, GBM GC, GCM** E-57

Types **GL, GZ** E-58

Type **GC-CT** E-59

Type **GIE-G** E-60

Type **GCB63T13G1** E-61

Static Discharge Reels E-62

Rail Connectors E-63

Types **QGFL, GA-H** E-64

Raised Floor Ground Connectors

SUPER-CLAMP™ (Type **GXP**) E-65
UNIGROUND™ (Type **GRF**) E-66
Types **GP-G1, GP-RT** E-67

Bus Bar (Type **BBB**) E-68, E-69

Type **BWB680 Series Pool Water Bonding Kit** E-70

Blue highlighted items are industry standard and most frequently ordered.

TABLE OF CONTENTS (continued)

BURNDYWeld® Exothermic Grounding

QIKLITE® BURNDYWeld® Battery Ignition System E-71

BURNDYWeld® Introduction E-72

Making a BURNDYWeld® Connection E-73

BURNDYWeld® Weld Metal E-74

Type **BCC-1** Molds Horizontal End to End E-75

Type **BCC-2** Molds Horizontal Cable Tap to Horizontal Cable Run E-76

Type **BCC-4** Molds Horizontal to Horizontal Cable Cross E-77

Type **BCC-11** Molds Horizontal to Horizontal Cable Cross E-78

Type **BCC-6** Molds Horizontal Parallel Tap E-79

Type **BCC-14** Molds Horizontal Parallel through Cables E-79

Type **BCC-7** Molds Horizontal Parallel through Cables E-80

Type **BCR-1** Molds Horizontal Cable Terminal to Ground Rod E-81

Type **BCR-2** Molds Horizontal Cable to Ground Rod E-82

Type **BCR-3** Molds Horizontal through Cable to Ground Rod E-83

Type **BCR-17** Molds Horizontal Run and Tap Cables to Ground Rod E-84

Type **BCR-24** Molds Horizontal Parallel Run Cables to Ground Rod E-85

SINGLE SHOT MOLDS E-86

Type **BCS-1** Molds Horizontal Cable to Horizontal Steel Surface E-87

Type **BCS-8** Molds Horizontal Cable to Horizontal Steel Surface E-87

Type **BCS-2** Molds Horizontal through Cable to Horizontal Steel Surface E-88

Type **BCS-9** Molds Horizontal Cable to Horizontal Steel Surface E-88

Type **BCS-3** Molds Angular Cable Drop to Vertical Steel Surface E-89

Type **BCS-23** Molds Vertical Cable Drop to Vertical Steel Surface E-90

Type **BCS-4** Molds Vertical through Cable to Vertical Steel Surface E-90

Type **BCS-6** Molds Horizontal through Cable to Vertical Steel Surface E-91

Type **BCS-7** Molds Overhead Vertical Tap Cable to Vertical Steel Surface E-91

Type **BCS-18** Molds Horizontal Tap Cable to Vertical Steel Surface E-92

Type **BCS-5** Molds Horizontal Cable Tap to Horizontal Cast Iron Surface E-92

Type **BCRE-1** Molds Horizontal Parallel Tap to Rebar E-93

Type **BCRE-2** Molds Horizontal Parallel Tap to Horizontal Rebar Run E-94

Type **BCRE-3** Molds Horizontal through Cable to Vertical Rebar E-95

Type **BCRE-4** Molds Horizontal through Cable to Horizontal Rebar E-96

Type **BCRE-6** Molds Horizontal Cable Tap to Vertical Rebar E-97

Blue highlighted items are industry standard and most frequently ordered.

TABLE OF CONTENTS (continued)

BURNDYWeld® Exothermic Grounding (continued)

GROUNDMAX® E-98, E-99

GRIDMAX™ E-100

E-4

B-106 & B-107 Handle Clamps E-101

B40-0106-75 Handle Attachment E-101

Mold Support Clamp E-101

Vertical Magnetic Clamps E-102

Horizontal & Vertical Chain Clamps E-102

BURNDYWeld® Accessories

B38-0330-00 Cable Clamp E-103

Cable Cleaning Brush & Card Cloth Brush E-103

Mold Cleaners E-103

Packing Material E-103

BURNDYWeld® Tool Kits E-104

BURNDYWeld® Tools E-104

B38-0101-00 Rasp E-104

B38-0309-00 Flint Ignitor E-104

Ground Rod Driving Sleeves E-105

Shim Stock, Adapter Sleeves E-105

Blue highlighted items are industry standard and most frequently ordered.

THE HYGROUND® IRREVERSIBLE COMPRESSION SYSTEM

BURNDY® has developed an irreversible compression ground system which meets the most stringent safety and performance requirements, including those of OSHA and nuclear power plant design. Performance excellence and long life expectancy are the system's basic design guidelines. It is a complete system which consists of connectors for grid cross connections, taps, splices, cable to ground rod, ground plates and terminations.

Our irreversible compression ground connectors employ well-proven design principles and technology that have been in existence for over 60 years.

Connectors are just one component of our Irreversible Compression Ground System. Installation tooling is also an integral part of this system. BURNDY® pioneered the compression connector principle and continues today to be the leader in compression technology. Our tooling package is the most extensive in the industry and affords the user many options.

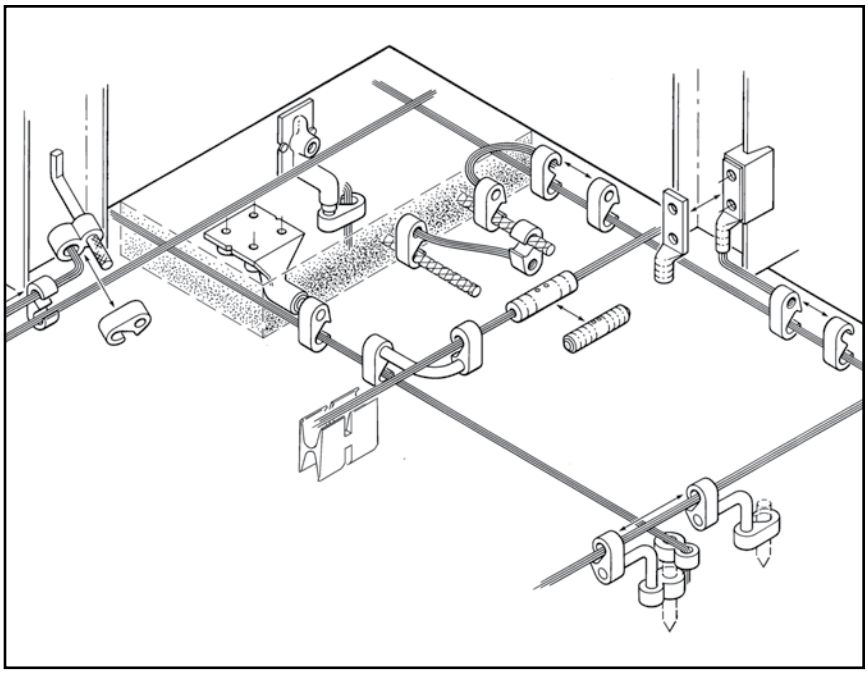

(LEGEND)

YGHPC	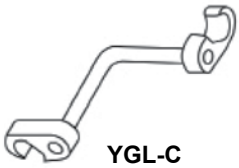 YGL-C	YGHA	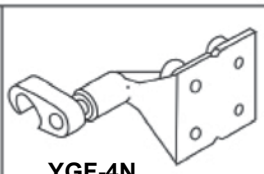 YGF-4N	YSHG
YGHR-C	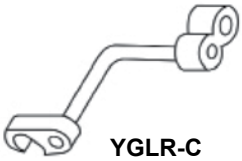 YGLR-C	YGHS	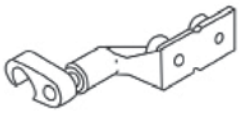 YGF-2N	YGIB
YGHC-C	YGA	YGS	GSTUD-HY	

Blue highlighted items are industry standard and most frequently ordered.

THE HYGROUND® IRREVERSIBLE COMPRESSION SYSTEM

(Continued)

Features and Benefits

- Irreversible compression.

  ◊ Meets NEC code, section 250.

- Material-pure wrought copper extrusions, rod and seamless tubing––identical material to the conductor.

  ◊ Completely eliminates the possibility of corrosion due to dissimilar metals.

- Heavy duty connector design.

  ◊ All connectors will carry the equivalent or greater current carrying capacity of the conductor while maintaining high mechanical strength and electrical integrity.

- Range taking design––minimum number of connector combinations required to install a conductor range of #6 solid to 500 kcmil plus 1/2", 5/8", 3/4", and 1" ground rods and rebar.

  ◊ Inventories are kept to a minimum and product selection is simplified.

- System engineered tooling.

  ◊ Each tooling recommendation has been designed to ensure reliability of the connection.

- Irreversible compression connectors can be installed in all kinds of weather.

  ◊ Eliminates costly construction delays and enables the installer to better schedule his job.

- May be installed without special training or special tools. Y750 crimps entire range.

  ◊ Low installed cost.

  ◊ Simplified installation.

- Each connection can be made in less than 3 minutes.

  ◊ Low installed cost.

  ◊ Simplified installation.

- Each connector is clearly marked with catalog number, conductor size and installation die information.

  ◊ Easy and accurate identification.

- Inspection ports are provided to assure proper insertion of the conductor.

  ◊ Built-in quality assurance.

- The die index number is embossed on the connector after completion of the crimp.

  ◊ Facilitates speedy inspection of installed connectors to insure consistently reliable and sound connections.

- Most HYGROUND® irreversible compression elements are prefilled with PENETROX™ and individually sealed.

  ◊ Ensures that all contact surfaces are in the proper condition for installation.

  ◊ Ensures the electrical integrity of the finished connection by inhibiting moisture and contaminates from entering the contact area.

- All HYGROUND® irreversible compression connectors are Listed in conformance with Underwriters Laboratories Standard UL467 and conform to applicable sections of the National Electrical Code.

  ◊ May be used in direct burial or concrete embedded grounding applications.

- All HYGROUND® irreversible connectors (with the exception of type YGA and YGS) have been tested successfully according to requirements of Standard IEEE 837.

  ◊ Meets tough industry performance requirements.

  ◊ UPRECRIMP dies give added mechanical strength. UPRECRIMP 34 for 3/4" rod, UPRECRIMP 12 for 1/2" rod, and UPRECRIMP 58 for 5/8" rod (now includes undersized U.S. marketplace rods).

- Allows connection to most sizes of structural steel with no drilling, tapping, or welding.

  ◊ Safely installed at low cost. Hot work permits are not required to install in hazardous areas

TYPE YGL-C

HYGRID™ CROSS CONNECTOR

An irreversible compression ground grid cross connector which allows adjustment of the compression elements prior to installation. Only six connectors and four dies are required to install all combinations from #6 solid through 500 kcmil. UL467 Listed. Acceptable for direct burial in earth and concrete. Prefilled with PENETROX™ compound and strip sealed.

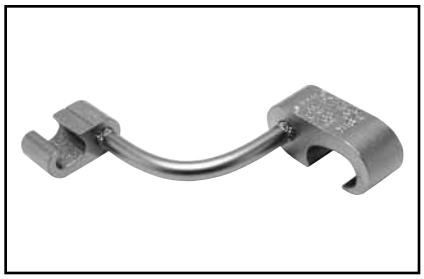

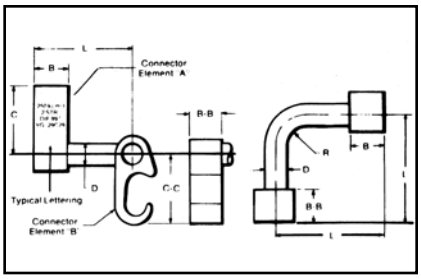

467 96

IEEE-837

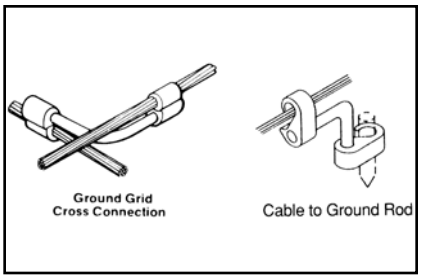

UL96 Listed for Lightning Protection.

Catalog Number	B	BB	C	C-C	D	L	R
YGL2C2	0.75	0.75	1.09	1.09	0.31	2.50	0.31
YGL29C2			1.66	1.09	0.31		0.31
YGL29C29			1.66	1.66	0.50		0.50
YGL34C2			2.09	1.09	0.31		0.31
YGL34C29			2.09	1.66	0.50		0.50
YGL34C34	1.10	1.10	2.28	2.28	0.75		0.75

ORDERING INFORMATION

Catalog Number	Cable to Cable		Cable to Ground Rod		To Rebar
	Element "A"	Element "B"	Element "A"	Element "B"	Element "A"
YGL2C2	#6 Sol. (0.162) - #2 Str. (0.292) {59500} - {59500}	#6 Sol. (0.162) - #2 Str. (0.292) {59500} - {59500}	—	—	—
YGL29C2	#1 Str. (0.332) - 250 kcmil (0.575) {98500} - {131500}	#6 Sol. (0.162) - #2 Str. (0.292) {59500} - {59500}	1/2" - 5/8" Rod	#6 Sol. (0.162) - #2 Str. (0.292)	3/8" - 1/2" #3 - 4 Rebar
YGL29C29	#2 Str. (0.292) - 250 kcmil (0.575) {65500} - {131500}	#2 Str. (0.292) - 250 kcmil (0.575) {65500} - {131500}	1/2" - 5/8" Rod	#2 Str. (0.292) - 250 kcmil (0.575)	
YGL34C2	250 kcmil (0.575) - 500 kcmil (0.813)	#6 Sol. (0.162) - #2 Str. (0.292)	5/8" - 3/4" Rod	#6 Sol. (0.162) - #2 Str. (0.292)	5/8" - 3/4" #5 - 6 Rebar
YGL34C29		#2 Str. (0.292) - 250 kcmil (0.575)		#2 Str. (0.292) - 250 kcmil (0.575)	
YGL34C34		250 kcmil (0.575) - 500 kcmil (0.813)		250 kcmil (0.575) - 500 kcmil (0.813)	

Dimensions in brackets { } represent lightning protection conductors.

Catalog Number	Installation Tools, Die Set Catalog Number (Number of Crimps)							
	Y750/Y35/Y39 HYPRESS™		PAT750-18V		Y45 HYPRESS™		Y46 HYPRESS™	
	Element "A"	Element "B"	Element "A"	Element "B"	Element "A"	Element "B"	Element "A"	Element "B"
YGL2C2	U-O (1)	U-O (1)	U-O (1)	U-O (1)	U-O (1)	U-O (1)	U-O (1)	U-O (1)
YGL29C2	U997 (1)	U-O (1)	③ U997P (1)	U-O (1)	U997 (1)	U-O (1)	U997 (1)	U-O (1)
YGL29C29	U997 (1)	U997 (1)	③ U997P (1)	③ U997P (1)	U997 (1)	U997 (1)	U997 (1)	U997 (1)
YGL34C2*	-	-	PU998 (1)	U-O (1)	S998 or PU998 (1)	U-O (1)	P998 or PU998 (1)	U-O (1)
YGL34C29*	-	-	PU998 (1)	③ U997P (1)	S998 or PU998 (1)	U997 (1)	P998 or PU998 (1)	U997 (1)
YGL34C34*	-	-	U1011 (3)	U1011 (3)	S1011 (3)	S1011 (3)	P1011 (3)	P1011 (3)

1. Where a "U" or "PU" die is recommended with Y45 HYPRESS™, a PT6515 adapter must be used.
2. Where a "U" or "PU" die is recommended with the Y46 HYPRESS™, a PUADP-1 adapter must be used.

③ Polarized die for the PAT750-18V.

* These connectors can only be installed using the Y750, Y45, or Y46 HYPRESS™ with the recommended dies.

NOTES:

- Before crimping, both connector elements can be turned on rod diameter "D" to any desired position.
- Clean rust and/or protective coatings from rebar prior to installation.
- When attaching connector to ground rod, ground rod must be embossed with appropriate PRECRIMP™ die. For connections that must meet IEEE 837 requirements UPRECRIMP-type PRE crimp dies must be used for maximum clamping retention.

Ground Rod Dia.	PRECRIMP Dies	
1/2"	UPRECRIMP 12	U2CABT
5/8"	UPRECRIMP 58	
3/4"	UPRECRIMP 34	

Blue highlighted items are industry standard and most frequently ordered.

TYPE YGLR-C

GRIDLOK™

High Strength Irreversible Compression Ground Rod to Grid Connector

Ground grid connector for a wide range of copper cable to ground rod. Provides high torque strength on ground rod. UL467 Listed. Acceptable for direct burial in earth and concrete. Prefilled with PENETROX™ compound and strip sealed.

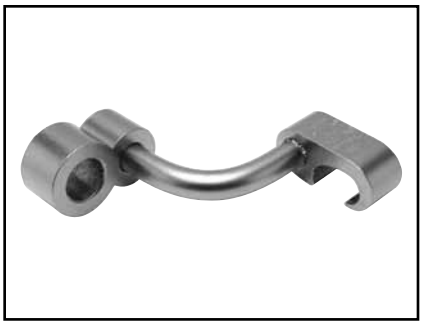

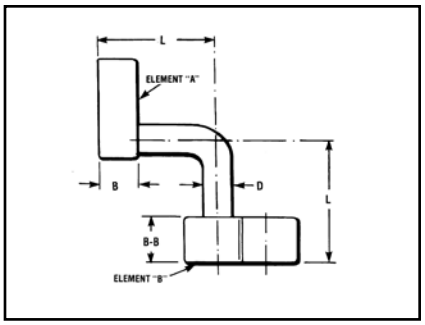

IEEE-837

Catalog Number	B	B-B	D	L	Commercial Copper Cable Range Element "A"	Metric Copper Cable Range Element "A"	CopperWeld Cable Range Element "A"	Ground Rod Dia Element "B"
YGLR29C12	0.75	0.88 [22.4]	0.31	2.53	#2 Str. (0.292 Dia.) - 250 kcmil (0.575 Dia.)	35mm2 (7.62mm Dia.) - 120 mm2 (14.40mm Dia.)	91.65 kcmil (0.343 Dia.) - 248.8 kcmil (0.572 Dia.)	1/2" [12.7]
YGLR34C12	0.75	0.88 [22.4]	0.31	2.53	250 kcmil (0.575 Dia.) - 500 kcmil (0.813 Dia.)	120 mm2(14.40mm Dia.) - 240 mm2 (20.35mm Dia.)	248.8 kcmil (0.572 Dia.) - 498.8 kcmil (0.810 Dia.)	
YGLR29C58	0.75	0.88 [22.4]	0.31	2.53	#2 Str. (0.292 Dia.) - 250 kcmil (0.575 Dia.)	35mm2 (7.62mm Dia.) - 120 mm2 (14.40mm Dia.)	91.65 kcmil (0.343 Dia.) - 248.8 kcmil (0.572 Dia.)	5/8" [15.9]
YGLR34C58	0.75	0.88 [22.4]	0.31	2.53	250 kcmil (0.575 Dia.) - 500 kcmil (0.813 Dia.)	120 mm2 (14.40mm Dia.) - 240 mm2 (20.35mm Dia.)	248.8 kcmil (0.572 Dia.) - 498.8 kcmil (0.810 Dia.)	
YGLR29C34	0.75	0.88 [22.4]	0.50	2.63	#2 Str. (0.292 Dia.) - 250 kcmil (0.575 Dia.)	35mm2 (7.62mm Dia.) - 120 mm2 (14.40mm Dia.)	91.65 kcmil (0.343 Dia.) - 248.8 kcmil (0.572 Dia.)	3/4" [19.1]
YGLR34C34	0.75	0.88 [22.4]	0.50	2.63	250 kcmil (0.575 Dia.) - 500 kcmil (0.813 Dia.)	120 mm2 (14.40mm Dia.) - 240 mm2 (20.35mm Dia.)	248.8 kcmil (0.572 Dia.) - 498.8 kcmil (0.810 Dia.)	
YGLR29C100	0.75	0.88 [22.4]	0.50	2.63	#2 Str. (0.292 Dia.) - 250 kcmil (0.575 Dia.)	35mm2 (7.62mm Dia.) - 120 mm2 (14.40mm Dia.)	91.65 kcmil (0.343 Dia.) - 248.8 kcmil (0.572 Dia.)	1" [25.4]
YGLR34C100	0.75	0.88 [22.4]	0.50	2.63	250 kcmil (0.575 Dia.) - 500 kcmil (0.813 Dia.)	120 mm2 (14.40mm Dia.) - 240 mm2 (20.35mm Dia.)	248.8 kcmil (0.572 Dia.) - 498.8 kcmil (0.810 Dia.)	

Catalog Number	Installation Tools, Die Set Cat. No. (Number of Crimps)							
	Y35/Y39 HYPRESS™		Y750/PAT750		② Y45 HYPRESS™		③ Y46 HYPRESS™	
	Element "A"	Element "B"	Element "A"	Element "B"	Element "A"	Element "B"	Element "A"	Element "B"
YGLR29C12	U997 (1)	PU998 (1)	U997 (1)	U1011 (2) or PU998 (1)	U997 (1)	S1012 (2) or PU998 (1)	U997 (1)	P1011 (2) or PU998 (1)
YGLR34C12	—	—	U1011 or PU998 (1)	U1011 (2) or PU998 (1)	S998 or PU998 (1)	S1012 (2) or PU998 (1)	P998 or PU998 (1)	P1011 (2) or PU998 (1)
YGLR29C58	U997 (1)	PU998 (1)	U997 (1)	U1011 (2) or PU998 (1)	U997 (1)	S1012 (2) or PU998 (1)	U997 (1)	P1011 (2) or PU998 (1)
YGLR34C58	—	—	U1011 or PU998 (1)	U1011 (2) or PU998 (1)	S998 or PU998 (1)	S1012 (2) or PU998 (1)	P998 or PU998 (1)	P1011 (2) or PU998 (1)
YGLR29C34	U997 (1)	PU998 (1)	U997 (1)	U1011 (2) or PU998 (1)	U997 (1)	S1012 (2) or PU998 (1)	U997 (1)	P1011 (2) or PU998 (1)
YGLR34C34	—	—	U1011 (2) or PU998 (1)	U1011 (2) or PU998 (1)	U1011 (2) or PU998 (1)	S1012 (2) or PU998 (1)	U1011 (2) or PU998 (1)	P1011 (2) or PU998 (1)
YGLR29C100	—	—	U997 (1)	U1011 (2) or PU998 (1)	U997 (1)	S1012 (2) or PU998 (1)	U997 (1)	P1011 (2) or PU998 (1)
YGLR34C100	—	—	U1011 (2) or PU998 (1)	U1011 (2) or PU998 (1)	U1011 (2) or PU998 (1)	S1012 (2) or PU998 (1)	U1011 (2) or PU998	P1011 (2) or PU998 (1)

② Where a "U" or "PU" die is recommended with Y45 HYPRESS™, a PT6515 adapter is required
③ Where a "U" or "PU" die is recommended with Y46 HYPRESS™, a PUADP-1 adapter is required
④ Polarized die for the PAT750 series tool

NOTES:
- Before crimping, both connector elements can be turned on rod diameter "D" to any desired position.
- When attaching connector to ground rod, ground rod must be embossed with appropriate PRECRIMP die. For connectors that must meet IEEE 837 requirements, UPRECRIMP-type precrimp dies must be used for maximum clamping retention. No precrimp needed if using S1012, P1011 or U1011 die sets.

Ground Rod Dia.	PRECRIMP Dies	
1/2"	UPRECRIMP 12	U2CABT
5/8"	UPRECRIMP 58	
3/4"	UPRECRIMP 34	

Blue highlighted items are industry standard and most frequently ordered.

TYPE YGHP-C

HYTAP™

Irreversible compression ground tap figure 6 can be used as a tap connector or as a tap splice connector. Four die sets and eight connectors can accommodate a conductor range from #8 solid through 500 kcmil plus 1/2", 5/8" and 3/4" copper bonded ground rods. UL467 Listed. Acceptable for direct burial in earth and concrete. Prefilled with PENETROX™ compound and strip sealed.

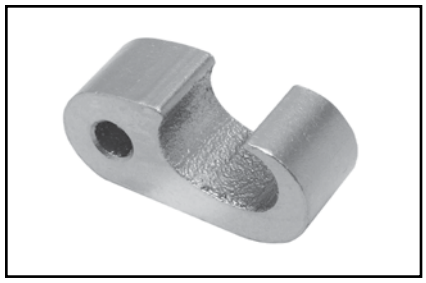

UL96 Listed for Lightning Protection.

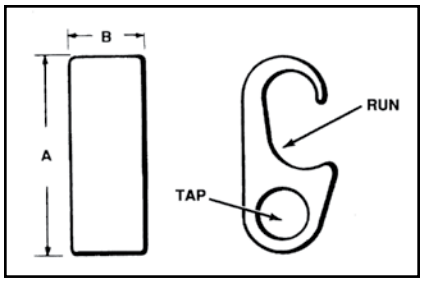

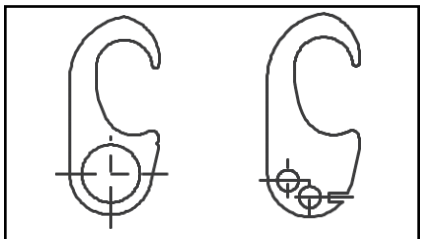

Fig. 1 Fig. 2

IEEE-837 UL 467 96 CSA DIRECT BURIAL

Catalog Number	Fig. #	Accommodates ① Run	Accommodates ① Tap	⑨ Cable to Rebar Run	⑨ Cable to Rebar Tap	B	Die Index	Installation Data Y750/Y35/Y39	PAT750-18V	Y45 ②	Y46 ③	# of Crimps
YGHP2C2	1	#6 Sol. (0.162) {59500} - #2 Str. (0.292) {59500}	⑥ #6 Sol. (0.162) {59500} - #2 Str. (0.292) {59500}	—	—	0.75	O	UO	UO	UO	UO	1
YGHP2C6W6W ⑦	2	#6 Sol. (0.162) - #2 Str. (0.292)	#8 Sol. (0.128) - #6 Str. (0.184) Qty. 2	—	—							1
YGHP29C6W6W ⑦	2	1/0 Str. (0.372) {98500} - 250 kcmil (0.575) {131500} 1/2" - 5/8" Rod	#8 Sol. (0.128) - #6 Str. (0.184) Qty. 2	#3 Rebar 3/8 - 1/2 #4 Rebar	#8 Sol. - 6 Str.		997	U997	U997P ④	U997	U997	1
YGHP29C2	1		#4 Sol. (0.204) {#4 Sol.} - #2 Str. (0.292) {#2 Str.}	#3 Rebar 3/8 - 1/2 #4 Rebar	#2 Str.	2.31						1
YGHP29C26	1		1/0 Str. (0.372) {98500} - 2/0 Str. (0.419) {98500}	#3 Rebar 3/8 - 1/2 #4 Rebar	1/0 Str. - 2/0 Str.							1
YGHP29C29 ⑧	1		3/0 Str. (0.470) {131500} - 250 kcmil (0.575) {211500}	#3 Rebar 3/8 - 1/2 #4 Rebar	3/0 Str. - 250 kcmil							1
YGHP34C2 ⑤	1	250 kcmil (0.575) {250 kcmil} - 500 kcmil (0.813) {500 kcmil} 5/8" - 3/4" Rod	#4 Sol. (0.204) - #2 Str. (0.292)	#5 Rebar 5/8 - 3/4 #6 Rebar	—		998	PU998	PU998	PU998 or S998	PU998 or P998	1
YGHP34C26 ⑤	1		1/0 Str. (0.372) {98500} - 2/0 Str. (0.419) {98500}	#5 Rebar 5/8 - 3/4 #6 Rebar	1/0 Str. - 2/0 Str.							1
YGHP34C29 ⑤	1		3/0 Str. (0.470) {131500} - 250 kcmil (0.575) {211500}	#5 Rebar 5/8 - 3/4 #6 Rebar	3/0 Str. - 250 kcmil							1
YGHP34C34 ⑤	1	250 kcmil (0.575) - 500 kcmil (0.813) 5/8" - 3/4" Rod	350 kcmil (0.681) - 500 kcmil (0.843)	#5 Rebar 5/8 - 3/4 #6 Rebar	350 kcmil - 500 kcmil	2.75	1011	U1011	U1011	S1011	P1011	3

NOTES:

① Dimensions in brackets { } represent lightning protection conductors.
② Where a "U" or "PU" die is recommended with Y45 HYPRESS™, a PT6515 adapter is required.
③ Where a "U" or "PU" die is recommended with Y46 HYPRESS™, a PUADP-1 adapter is required.
④ Polarized die for the PAT750 series tool.
⑤ These connectors can only be installed using the Y750, Y45 or Y46 series of HYPRESS™ tools; cannot be installed with the Y35 or Y39 series.
⑥ When using #6 Sol in tap, fold conductor double for improved fill.
⑦ Not UL96/CSA
⑧ When using 3/0 in tap, minimum run conductor must be 2/0 Str.
⑨ Clean rust and protective coatings from rebar prior to installation to provide proper ground connection. Precrimping is not required.

Ground Rod Dia.	PRECRIMP Dies	
1/2"	UPRECRIMP 12	U2CABT
5/8"	UPRECRIMP 58	
3/4"	UPRECRIMP 34	

For increased rotational resistance on ground rods, pre-crimp ground rod with U2CABT, UPRECRIMP dies may be used for even greater rotation and vibration resistance on ground rods.

Blue highlighted items are industry standard and most frequently ordered.

TYPE YGHP-C

HYTAP™ CONNECTOR

High Strength Copper Irreversible Compression

Ground Rod Tap Connector

Type YGHP-C irreversible compression ground tap figure 6 can be used as a ground rod tap connector for both continuous run and tapping applications. An open groove allows ground rod to be connected to a continuous run or tap. The second groove is for a tap only. Prefilled with PENETROX™ E and strip sealed. UL467 Listed for direct burial in earth or concrete.

IEEE-837

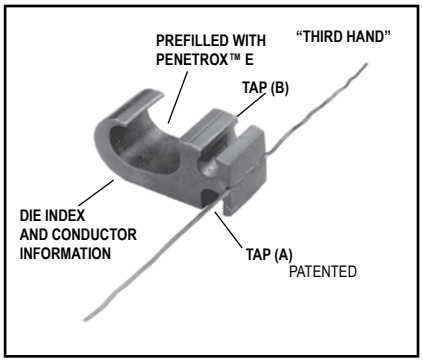

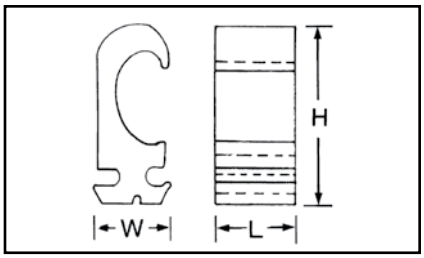

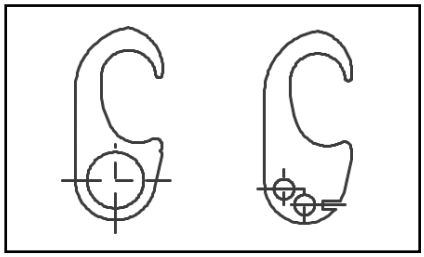

Features & Benefits

- Tap (A) accepts a continuous run on tap conductor. Tap (B) accepts a tap conductor only
  - ◊ One connector style can be used for many applications, reducing number of connectors in inventory
- Material is high conductivity wrought copper extrusion, identical material to the conductor
  - ◊ High-conductivity copper minimizes resistance and voltage drop. Eliminates the possibility of corrosion due to dissimilar metals
- System engineered tooling
  - ◊ The tooling recommendation has been designed to ensure a reliable, dependable connection every time
- The die index number is embossed on conductor after completion of crimp
  - ◊ Facilitates speedy inspection of installed connectors to insure consistently reliable and dependable connections
- Prefilled with PENETROX™ E and individually sealed in clear polyethylene sheet
  - ◊ Ensures the electrical integrity of the finished connection by inhibiting moisture and contaminates from entering the contact area. Maintains long-term high-conductivity
- UL467 Listed
  - ◊ May be used in direct burial or concrete embedded grounding applications. Provides quality assurance to recognized industry NEC standards from an independent party
- "Third Hand" constrains conductors while installer completes crimp, included with each connector
  - ◊ Simplifies installation, reducing installed cost

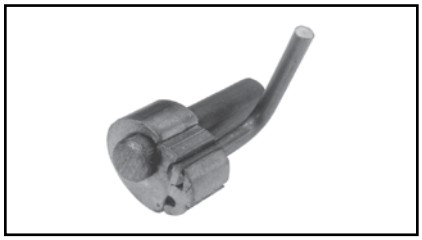

SINGLE TAP

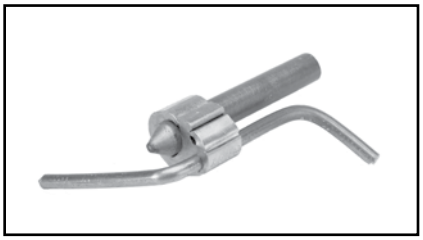

CONTINUOUS RUN

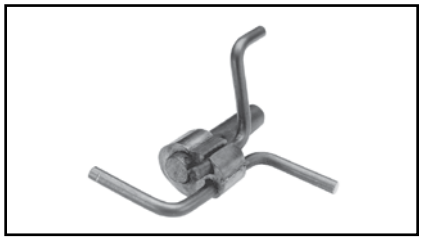

CONTINUOUS RUN AND TAP

Catalog Number	Ground Rod Dia. ①	Tap Conductor ②	Dimensions			Installation Tooling Die Number ③ (# of Crimps)		Die Index
			H	L	W	Y35/Y750/PAT750 HYPRESS™	④ Y46 HYPRESS™	
YGHP58C2W-2	1/2" - 5/8"	#2 Sol. - #6 Sol. Copper (1) Continuous Run and (1) Tap or up to (2) Taps may be connected	1.90"	0.75"	0.94"	U997 (1)	U997 (1)	997
YGHP58C2W-2TN								

① Ground rod must be precrimped with die U2CABT (Index 348); for greater rotational resistance use UPRECRIMP die; Galvanized Steel Rods require YGHP58C2W-2TN

② Either tap position may be left void when fewer than (2) conductors are used

③ See Tooling Section in Master Catalog for complete tool and die listing

④ Use PUADP-1 with "U"-dies in Y46

NOTE:
A 12″ bend radius is recommended for the conductor

Blue highlighted items are industry standard and most frequently ordered.

TYPE YGHC-C

HYTAP™ CONNECTOR

Irreversible compression ground tap figure "C" connectors. Accommodates all cable combinations from #6 solid through 500 kcmil. "C"- shaped opening permits placing two continuous parallel cables into conductor groove. UL 467 Listed. Acceptable for direct burial in earth or concrete. Prefilled with PENETROX™ compound and strip sealed. Certain sizes are also UL467 Listed and CSA Certified for wire to ground rod.

UL96 Listed for Lightning Protection.

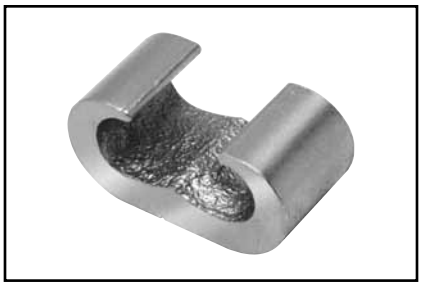

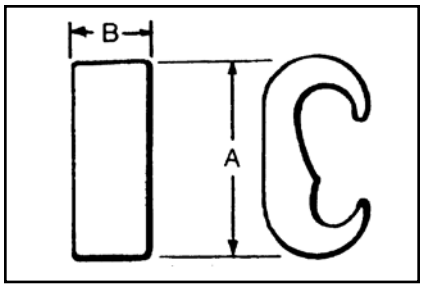

IEEE-837

467 96

Catalog Number	① Commercial Copper Cable to Cable or ② Cable to Ground Rod		Stranded Copper Cable Range Metric		A	B	Die Index No.	Installation Data			No. of Crimps
	Run	Tap	Run	Tap				Y750/Y35/ PAT750/Y39	Y45 ③	Y46 ④	
YGHC2C2	#6 Sol. (0.162) #2 Str. (0.292) 1/4" Rod⑤	#6 Sol. (0.162) #2 Str. (0.292)	10 mm² (4.12 mm) 35 mm² (7.62 mm)	10 mm² (4.12 mm) 35 mm² (7.62 mm)	1.16	0.75	C	U-C	U-C	U-C	1
YGHC26C2	1 Str. (0.328) {98500} 2/0 Str. (0.419) {98500} 3/8" Rod ⑤	#6 Sol. (0.162) {#6 Sol.} #2 Str. (0.292) {#2 Str.}	35 mm² (7.62 mm) 70 mm² (10.9 mm)	10 mm² (4.12 mm) 35 mm² (7.62 mm)	1.41	0.75	O	U-O	U-O	U-O	1
YGHC26C26	1 Str. (0.328) {98500} 2/0 Str. (0.419) {98500} 3/8" Rod ⑤	1 Str. (0.328) {98500} 2/0 Str. (0.419) {98500}	35 mm² (7.62 mm) 70 mm² (10.9 mm)	35 mm² (7.62 mm) 70 mm² (10.9 mm)	1.54	0.75	O	U-O	U-O	U-O	1
YGHC29C26	3/0 Str. (0.470) {3/0 Str.} 250 kcmil (0.575) {250 kcmil} 1/2" or 5/8" Rod⑤	6 Sol. (0.162) {59500} 2/0 Str. (0.419) {98500}	95 mm² (12.5 mm) 120 mm² (14.4 mm)	10 mm² (4.10 mm) 70 mm² (10.90 mm)	1.97	0.75	997	U997	U997	U997	1
YGHC29C29	3/0 Str. (0.470) 250 kcmil (0.575) 1/2" or 5/8" Rod ⑤	3/0 Str. (0.470) 250 kcmil (0.575)	95 mm² (12.5 mm) 120 mm² (14.4 mm)	95 mm² (12.5 mm) 120 mm² (14.4 mm)	2.06	0.88	997	U997	U997	U997	1
YGHC34C26 ⑥	300 kcmil (0.630) {300 kcmil} 500 kcmil (0.813) {500 kcmil} 3/4" Rod ⑤	6 Sol. (0.162) {59500} 2/0 Str. (0.419) {98500}	150 mm² (16 mm) 240 mm² (20.35 mm)	10 mm² (4.10 mm) 70 mm² (10.90 mm)	2.42	0.88	1011	U1011	S1011	P1011	2
YGHC34C29 ⑥	300 kcmil (0.630) 500 kcmil (0.813)	3/0 Str. (0.470) 250 kcmil (0.575)	150 mm² (16 mm) 240 mm² (20.35 mm)	95 mm² (12.5 mm) 120 mm² (14.4 mm)	2.67	0.88	1011	U1011	S1011	P1011	2
YGHC34C34 ⑥	300 kcmil (0.630) 500 kcmil (0.813)	300 kcmil (0.630) 500 kcmil (0.813)	150 mm² (16 mm) 240 mm² (20.35 mm)	150 mm² (16 mm) 240 mm² (20.35 mm)	2.91	1.10	1011	U1011	S1011	P1011	3

① Dimensions in brackets { } represent lightning protection conductors
② For ground rod to wire applications, ground rod must be precrimped; see table for appropriate precrimp dies
③ Where a "U" or "PU" die is recommended with the Y45 HYPRESS™, a PT6515 adapter must be used
④ Where a "U" or "PU" die is recommended with the Y46 HYPRESS™, a PUADP-1 adapter must be used
⑤ Ground rod to copper cable is UL467 Listed for direct burial in earth and concrete
⑥ These connectors cannot be installed with the Y35 or Y39 HYPRESS™

NOTES:
Listed under UL486A for copper wire connectors
For connectors without PENETROX™ oxide inhibitor,add suffix "NP" to the end of the catalog number (example: YGHC2C2-NP)

Ground Rod Dia.	PRECRIMP Dies	
1/2"	UPRECRIMP 12	U2CABT
5/8"	UPRECRIMP 58	
3/4"	UPRECRIMP 34	

Blue highlighted items are industry standard and most frequently ordered.

TYPE YGC

COPPER CRIMPIT™

UL 467 Listed for direct burial in earth or concrete.
Prefilled with PENETROX™ E2 oxide inhibitor.

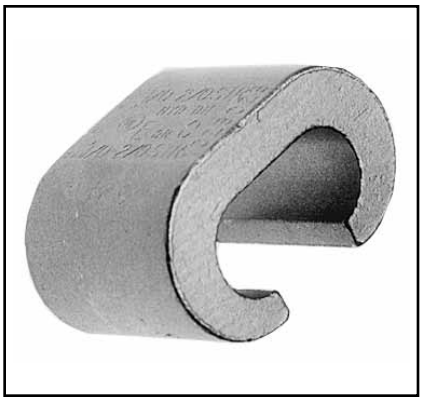

Catalog Number	Copper Conductor (Sol. & Str.)		H	L	Die Index	OUR840	MD6/MD7	Number of Crimps
	Run	Tap						
YGC8C8	8 AWG	8 AWG	0.46	0.52	162	W162	W162	2
YGC6C8	6 AWG	8 AWG	0.73	0.62	BG	XBG	WBG	2
YGC6C6	6 AWG	6 AWG	0.76	0.62	BG	XBG	WBG	2

TYPE YSHG

HIGH STRENGTH COPPER IRREVERSIBLE COMPRESSION

Double H-Tap Connector

Type YSHG Double H-Tap grounding series is comprised of five connectors designed to accommodate wire range sizes #14 through 500 kcmil, including ground rod sizes: 3/4", 1", and rebar sizes: #6, #7, #8 and #9. Prefilled with PENETROX™ E2 and strip sealed.

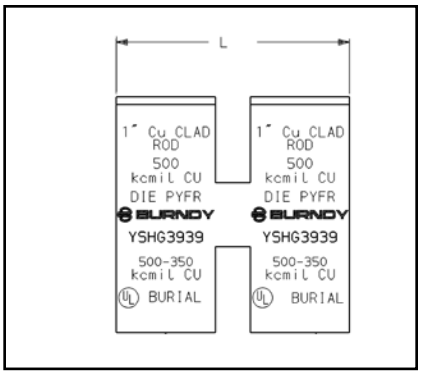

Features & Benefits

- UL467 Listed
  - ◊ Suitable for direct burial in earth or concrete.
- Material is high conductivity copper extrusion
  - ◊ Minimizes resistance, eliminates corrosion due to dissimilar metals.
- Grooves are prefilled with PENETROX™ E2 oxide inhibitor and individually sealed
  - ◊ Inhibits moisture and contaminants ensuring electrical integrity.

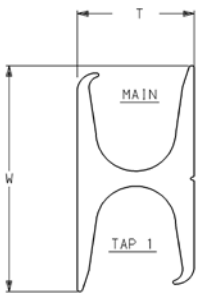

Fig. 1

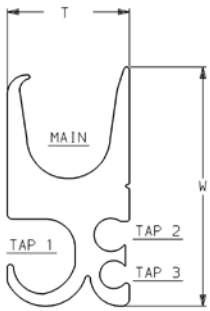

Fig. 2

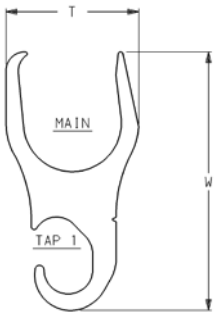

Fig. 3

Catalog Number	Fig. #	Conductor Sizes				Tooling (# of crimps)		Index Embossment	W ±.06	T ±.04	L ±.06
		Main	Tap 1	Tap 2	Tap 3	PAT750/Y750	Y46				
YSHG4429	3	#9 & #8 Rebar, 1" [25] Ground Rod	250 - 2	—	—	—	PYFR (2)	KR	3.22	1.70	2.44
YSHG3931 ①	2	#6 & #7 Rebar, 1" [25] Cu Clad Ground Rod, 3/4" Ground Rod 500 - 350 kcmil Copper	4/0 - 1/0	1 - 6	2 - 14	—	PYFR (2)	KR	2.97	1.50	2.34
YSHG3434	1	#6 Rebar, 3/4" [19] Ground Rod 400 - 250 kcmil Copper	400 - 4/0	—	—	U1104 (4)	P1104 (2) ② U1104 (4)	1104	2.43	1.15	2.44
YSHG3429	2	#6 Rebar, 3/4" [19] Ground Rod 400 - 4/0 kcmil Copper	3/0 - 1/0	1 - 4	8 - 14	U1104 (4)	P1104 (2) ② U1104 (4)	1104	2.23	1.31	2.44

① Not for use on 1" steel ground rod

② Use PUADP-1 adapter

Blue highlighted items are industry standard and most frequently ordered.

TYPE YGHR-C

HYTAIL™

High Strength Irreversible Compression Ground Rod Tap Connectors

High torque strength ground rod connectors. Accommodates a wide range of copper conductors to ground rod. UL467 Listed. Acceptable for direct burial in earth or concrete. Prefilled with PENETROX™ compound and strip sealed.

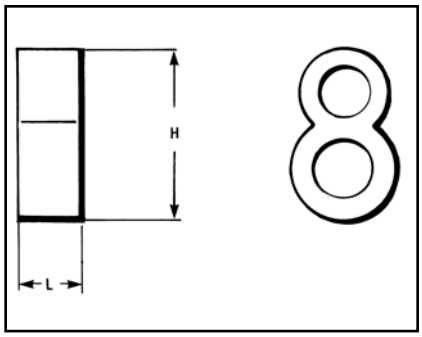

IEEE-837

Catalog Number	H	L	Commercial Copper Cable Range	Nominal Ground Rod Dia.	Installation Tools, Die Set Catalog Number (# of Crimps)		
					PAT750/Y750/ ① Y35/Y39	Y45 ① HYPRESS™	Y46 ① HYPRESS™
YGHR26C12	1.94	0.88	#2 Str. (0.29 Dia.) - 2/0 Str. (0.42 Dia.)	1/2" [12.70]	—	S1012 (2) ② PU998 (1)	P1011 (2) ③ PU998 (1)
YGHR26C58	1.97			5/8" [15.90]	U1011 (2) PU998 (1)		
YGHR26C34	2.19			3/4" [19.00]			
YGHR26C100 ④	2.55			1" [25.40]		S1011 (2) S1012 (2) ② PU998 (1)	
YGHR29C12	1.94		#4/0 Str. (0.53 Dia.) - 250 kcmil (0.58 Dia.)	1/2" [12.70]		S1012 (2) ② PU998 (1)	
YGHR29C58	2.14			5/8" [15.90]			
YGHR29C34	2.19			3/4" [19.00]			
YGHR29C100 ④	2.45			1" [25.40]		S1011 (2) S1012 (2) ② PU998 (1)	
YGHR34C58	2.14		300 kcmil (0.63 Dia.) - 500 kcmil (0.81 Dia)	5/8" [15.90]		S1012 (2) ② PU998 (1)	
YGHR34C34 ④	2.44			3/4" [19.00]			
YGHR34C100 ④	2.45			1" [25.40]		S1011 (2)	P1011 (2)

① Ground rod must be pre-crimped with die U2CABT (index 348) when the PU998 dies are used in the Y750, PAT750, Y35, Y39, Y45, Y46 and PAT46 tools; pre-crimping is not required when the P1011, S1011, S1012 or U1011 dies are used; UPRECRIMP dies may be used for additional mechanical resistance on ground rods.
② Where a PU998 die is recommended with the Y45 HYPRESS™, a PT6515 adapter must be used.
③ Where a PU998 die is recommended with the Y46 HYPRESS™, a PUADP-1 adapter must be used.
④ These connectors cannot be installed with the Y35 or Y39 HYPRESS™.

NOTES:
The catalog numbers shown are for unplated copper connectors for use on copper clad or stainless steel ground rod. To order electro-tin plated connectors for use on galvanized steel ground rod add suffix "-TN" to the catalog number. The ground rod hole diameter is larger for galvanized steel ground rod in the tin plated connector.

Complete die catalog numbers do not always appear on the connector, sometimes it is the die index.

Blue highlighted items are industry standard and most frequently ordered.

TYPE YGHR-C

HYTAIL™

High Strength Irreversible Compression Ground Rod Tap Connectors

Type YGHR-C irreversible compression grounding connector is engineered specifically for the Telecommunications Industry for (1, 2 or 3) #2 solid, tinned or bare conductor taps. UL467 Listed. Acceptable for direct burial in earth or concrete. BURNDY® has designed this connector to meet the stringent requirements of OSHA, the National Electric Code (NEC), UL, and the Telecommunications Industry. Performance and long life are this connector's basic design guidelines.

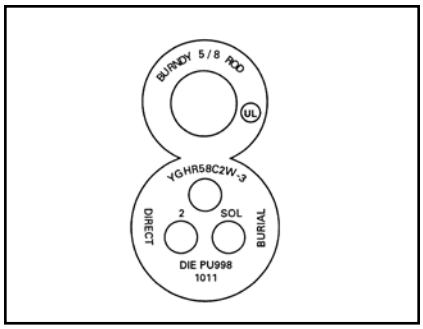

Features & Benefits

- Tap side 1, 2 or 3 conductors
  - ◊ One connector style can be used for many applications.
- Material is high conductivity wrought copper extrusion, identical material to the conductor
  - ◊ High-conductivity copper minimizes resistance and voltage drop. Eliminates the possibility of corrosion due to dissimilar metals.
- System engineered tooling
  - ◊ Each tooling recommendation has been designed to provide a reliable, dependable connection.
- The die index number is embossed on connector after completion of crimp
  - ◊ Facilitates speedy inspection of installed connectors to ensure consistently reliable and dependable connections.
- Prefilled with PENETROX™ and individually sealed in clear polyethylene sheet
  - ◊ Ensures the electrical integrity of the finished connection by inhibiting moisture and contaminates from entering the contact area. Maintains long-term high-conductivity.
- UL 467 Listed. Acceptable for direct burial
  - ◊ May be used in direct burial or concrete embedded grounding applications. Provides quality assurance to recognized industry NEC standards from an independent party.

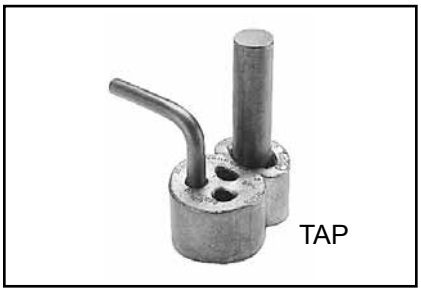

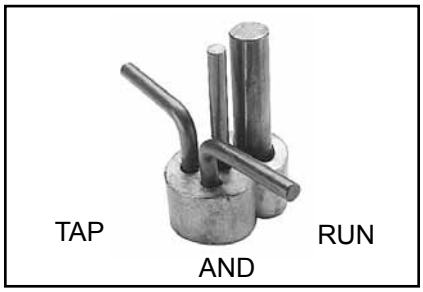

Catalog Number ⑤	Ground Rod Diameter ①	Tap Conductor ⑦	Installation Tools, Die Set Catalog Number (# of Crimps)		Die Index
			PAT750/Y750 ③ Y35④/Y39	Y46 ②	
YGHR58C2W-3	5/8"	#2 Sol Copper 1, 2, or 3 may be connected	PU998 (1) ⑥ U1011 (2)	PU998 (1) ⑥ U1011 (2) P998 (1) P1011 (2)	998/1011

① Contact BURNDY® for other ground rod diameters
② PU998 and U1011 die sets require PUADP-1 adapter for use in the Y46 HYPRESS™
③ The PAT750 and Y750 utilize PU dies and the U1011 die
④ The Y35 only uses PU998 die
⑤ To order electro-tin plated connector for use on galvanized steel ground rod add suffix "-TN" to the catalog number; The ground rod hole diameter is larger for galvanized steel ground rod in the tin plated connector
⑥ Ground rod must be precrimped with die U2CABT (Index 348) when PU998 die set is used in the Y35, Y750 or Y46 HYPRESS™ tools; for even greater mechanical resistance use UPRECRIMP58 dies
⑦ Tap positions may be left void when fewer than (3) conductors are used

Blue highlighted items are industry standard and most frequently ordered.

TYPE YGHA

HYLUG™

Heavy Duty Irreversible Compression Terminals

Heavy duty HYLUG™ irreversible compression terminals designed not only to carry short circuit load, but to also withstand high mechanical stress. Each conductor element has an inspection probe hole to ensure proper cable insertion. UL467 Listed. Acceptable for direct burial in earth or concrete. UL486A Listed. Prefilled with PENETROX™ compound and strip sealed.

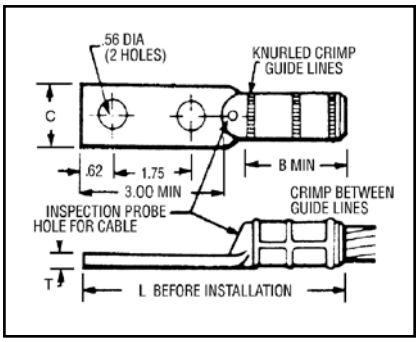

IEEE-837

Catalog Number	Copper Conductor Size	Installation Tools, Die Set Catalog Number and (# of Crimps) HYPRESS™ Y35/Y39/Y45①/Y46②/Y750/PAT750	B	C	L	T
YGHA2C-2N	2 AWG	U1CRT (1)	0.75	0.97	4.21	0.26
YGHA25-2N	1/0 AWG	U27RT (1)	0.83	0.91	4.60	0.19
YGHA26-2N	2/0 AWG	U28RT (1)	0.83	0.97	4.38	0.26
YGHA27-2N	3/0 AWG	U29RT (1)	1.18	1.08	4.94	0.29
YGHA28-2N	4/0 AWG	U30RT (2)	1.18	1.22	4.94	0.30
YGHA29-2N	250 kcmil	U31RT (2)	1.18	1.28	4.94	0.34
YGHA31-2N	350 kcmil	U34RT (2)	1.18	1.62	5.00	0.43
YGHA34-2N	500 kcmil	U36RT (3)	1.48	1.72	5.42	0.40

① Where a "U" or "PU" die is recommended with the Y45 HYPRESS™, a PT6515 adapter must be used
② Where a "U" or "PU" die is recommended with the Y46 HYPRESS™, a PUADP-1 adapter must be used

TYPE YGA

HYLUG™

Grounding Irreversible Compression Terminals

Irreversible compression HYLUG™ ground terminal specifically designed for grounding applications. Each connector has an inspection probe hole to ensure proper cable insertion. UL467 Listed. Acceptable for direct burial in earth or concrete. UL486A Listed. Prefilled with PENETROX™ compound and strip sealed.

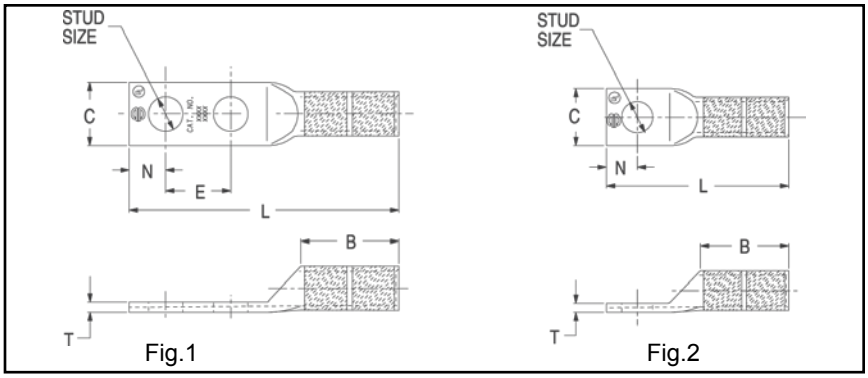

Catalog Number	Fig. #	Copper Conductor Size (Sol. & Str.)	Installation Tools, Die Set Cat. No. and (# of Crimps)			Stud Size	B	C	L	T	E
			Mechanical		Hydraulic						
			Y2MR	MD7-34R or OUR840	Y35/Y39/Y45①/ Y46②/Y750/PAT750						
YGA8C-TC10	2	8 Sol./8 Str.	Red (4)	W8CVT (2) X8CRT (2)	U8CRT (2)	#10	0.81	0.41	1.57	0.08	—
YGA8C-TC14	2	8 Sol./8 Str.	Red (4)	W8CVT (2) X8CRT (2)	U8CRT (2)	1/4	0.81	0.44	1.69	0.08	—
YGA8C-TC516	2	8 Sol./8 Str.	Red (4)	W8CVT (2) X8CRT (2)	U8CRT (2)	5/16	0.81	0.51	1.75	0.06	—
YGA8C-2N	1	8 Sol./8 Str.	Red (4)	W8CVT (2) X8CRT (2)	U8CRT (2)	1/2	0.78	0.83	4.09	0.12	1.75
YGA6C-TC10	2	6 Sol./6 Str.	Blue (4)	W5CVT (2) X5CRT (2)	U5CRT (2)	#10	1.12	0.42	1.89	0.09	—
YGA6C-TC14	2	6 Sol./6 Str.	Blue (4)	W5CVT (2) X5CRT (2)	U5CRT (2)	1/4	1.12	0.45	2.02	0.08	—
YGA6C-TC516	2	6 Sol./6 Str.	Blue (4)	W5CVT (2) X5CRT (2)	U5CRT (2)	5/16	1.12	0.51	2.08	0.07	—
YGA6C-2TC38E2G1	1	6 Sol./6 Str.	Blue (4)	W5CVT (2) X5CRT (2)	U5CRT (2)	3/8	1.12	0.58	3.42	0.06	0.75
YGA6C-2N	1	6 Sol./6 Str.	Blue (4)	W5CVT (2) X5CRT (2)	U5CRT (2)	1/2	1.09	0.83	4.40	0.12	1.75
YGA2C-2TC38	1	2 Sol./2 Str.	Brown (4)	W2CRT (2) X2CRT (2)	U2CRT (2)	3/8	1.25	0.60	3.48	0.12	1.00
YGA2C-2N	1	2 Str.	Brown (4)	W2CRT (2) X2CRT (2)	U2CRT (2)	1/2	1.22	0.83	4.71	0.12	1.75
YGA25-2N	1	1/0 Str.	—	W25VT (4) X25RT (4)	U25RT (2)	1/2	1.35	0.83	4.81	0.12	1.75
YGA26-2N	1	2/0 Str.	—	W26VT (4) X26RT (4)	U26RT (2)	1/2	1.45	0.81	4.97	0.12	1.75
YGA28-2N	1	4/0 Str.	—	W28VT (4) X28RT (4)	U28RT (2)	1/2	1.57	1.00	5.17	0.14	1.75
YGA29-2N	1	250 kcmil	—	W29VT (4)	U29RT (2)	1/2	1.57	1.09	5.21	0.16	1.75
YGA34-2N	1	500 kcmil	—	W34VT (4)	U34RT (4)	1/2	2.20	1.52	6.08	0.23	1.75

① Where a "U" or "PU" die is recommended with the Y45 HYPRESS™, a PT6515 adapter must be used
② Where a "U" or "PU" die is recommended with the Y46 HYPRESS™, a PUADP-1 adapter must be used

Blue highlighted items are industry standard and most frequently ordered.

TYPE GROUNDTAB

For any metal structure requiring grounding

The BURNDY® GROUNDTAB offers a convenient attachment point for terminations of ground wires to steel structures or steel supports. The tabs are easily welded to steel, with two mounting pattern options available. The tabs are made of steel, 1/4" thick, and can be used to attach 1-hole or 2-hole terminals. Compression terminals, mechanical terminals, or SERVIT® Posts can be used to attach ground wires to steel tabs. All connection options and necessary hardware are sold separately. Often used when traditional connection methods are not practical, or when temporary grounds are required. Common applications include large generators, mobile construction site modules, housing structures built in permafrost areas, and in any metal structure requiring a permanent or temporary ground option.

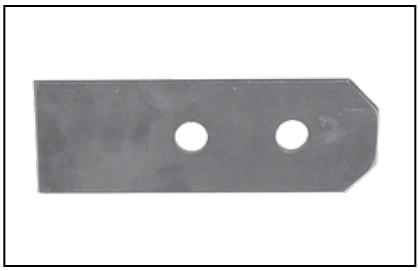

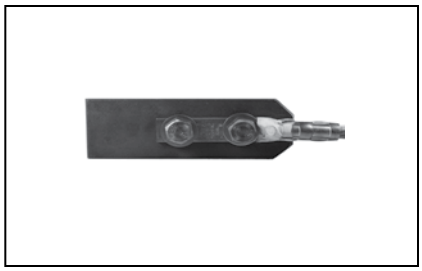

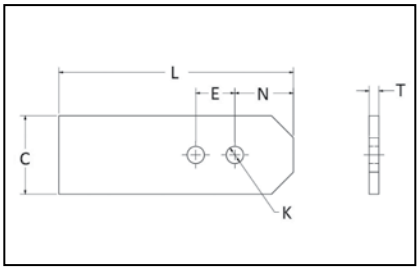

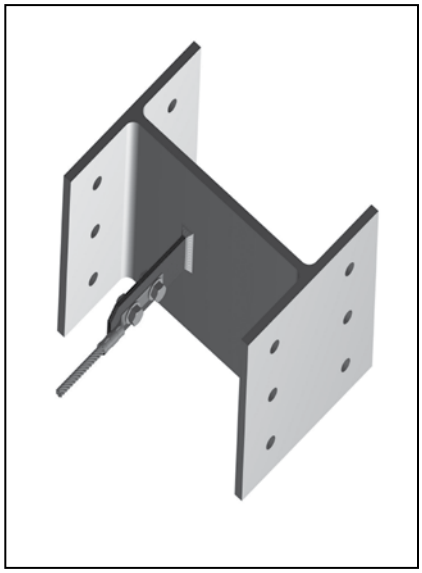

Above: GROUNDTAB with Type YGA HYGROUND® compression terminal and hardware.

Features & Benefits

- Convenient
- Can be used to attach 1-hole or 2-hole terminals
- 1/4" thick steel
- Easily welds to steel
- Many connection options
- Used when traditional options are not practical

Catalog Number	L Inches	C Inches	T Inches	N Inches	No. of Holes	Hole Size (K)	Hole Spacing (E) Inches
GROUNDTAB1/2	6.00	2.00	1/4"	1.50	2	1/2"	1.75
GROUNDTAB3/8	6.00	2.00	1/4"	1.50	2	3/8"	1.00

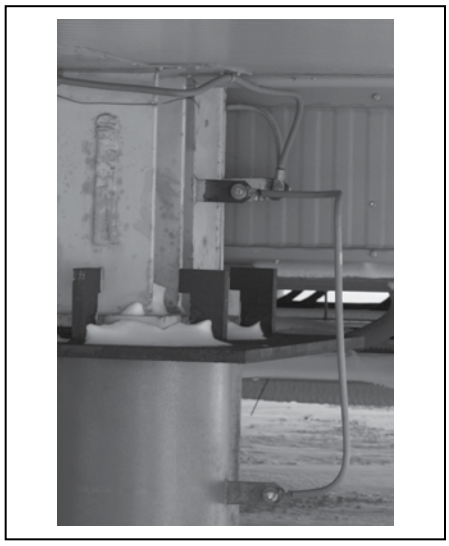

Right: Application image of **GROUNDTAB** *used with terminals*

Blue highlighted items are industry standard and most frequently ordered.

TYPE YGHS

HYLINK™

Heavy Duty Irreversible Compression Splices

Heavy duty HYLINK™ ground splice designed not only to carry short circuit load, but to also withstand high mechanical stress. Each conductor element has an inspection probe hole and a center stop to ensure proper cable insertion. UL467 Listed. Acceptable for direct burial in earth or concrete. UL486A Listed. Prefilled with PENETROX™ compound and strip sealed.

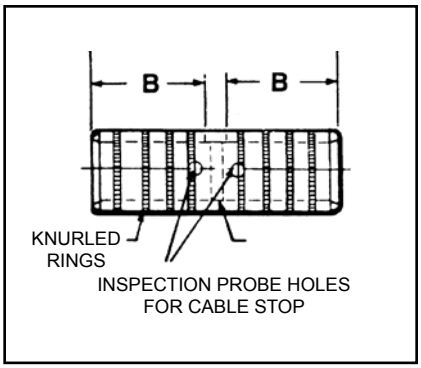

IEEE-837

Catalog Number	Copper Conductor Size	Installation Tools, Die Set Catalog Number and (# of Crimps) HYPRESS™ Y35/Y39/Y45①/Y46 ②/Y750/PAT750	B	L
YGHS2C	2 AWG	U1CRT (1)	0.75	1.73
YGHS25	1/0 AWG	U27RT (1)	0.83	1.89
YGHS26	2/0 AWG	U28RT (1)	0.83	1.89
YGHS27	3/0 AWG	U29RT (1)	1.18	2.59
YGHS28	4/0 AWG	U30RT (2)	1.18	2.59
YGHS29	250 kcmil	U31RT (2)	1.18	2.59
YGHS31	350 kcmil	U34RT (2)	1.18	2.59
YGHS34	500 kcmil	U36RT (3)	1.48	3.19

① Where a "U" or "PU" die is recommended with the Y45 HYPRESS™, a PT6515 adapter must be used
② Where a "U" or "PU" die is recommended with the Y46 HYPRESS™, a PUADP-1 adapter must be used

TYPE YGS

HYLINK™

Grounding Irreversible Compression Splices

Irreversible compression HYLINK™ ground splices specifically designed for grounding applications. Each conductor element has an inspection probe hole and a center stop to ensure proper cable insertion. UL467 Listed. Acceptable for direct burial in earth or concrete. UL486A Listed. Prefilled with PENETROX™ E compound and strip sealed.

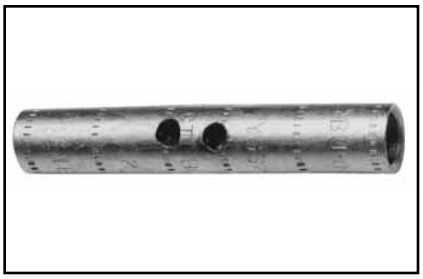

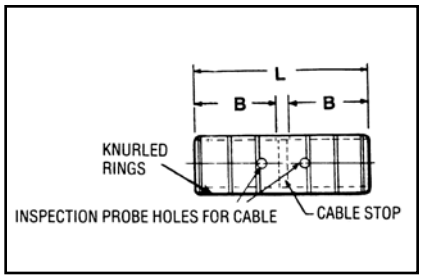

Catalog Number	Copper Conductor Size	Installation Tools, Die Set Catalog Number and (# of Crimps)				B	L
		Mechanical			Hydraulic		
		Y1MRTC	MD7-34R	OUR840	Y35/Y39/45①/Y46②/ Y750/PAT750		
YGS8C	8 Sol./Str.	Red (2)	W8CRT, W8CVT	X8CRT	U8CRT (2)	0.78	1.75
YGS6C	6 Sol./Str.	Blue (2)	W5CRT, W5CVT	X5CRT	U6CRT (2)	1.09	2.38
YGS2C	2 Sol./Str.	Brown (4)	W2CVT (2)	X2CVT (2)	U2CRT (2)	1.22	2.67
YGS25	1/0 Sol./Str.	—	W25VT (4)	X25RT (4)	U25RT (2)	1.35	2.97
YGS26	2/0 Str.	—	W26VT (4)	X26RT (4)	U26RT (2)	1.45	3.13
YGS28	4/0 Str.	—	W28VT (4)	X28RT (4)	U28RT (2)	1.57	3.37
YGS29	250 kcmil	—	W29VT (4)	—	U29RT (2)	1.57	3.37
YGS34	500 kcmil	—	W34VT (4)	—	U34RT (4)	2.20	4.63

①Where a "U" or "PU" die is recommended with the Y45 HYPRESS™, a PT6515 adapter must be used
②Where a "U" or "PU" die is recommended with the Y46 HYPRESS™, a PUADP-1 adapter must be used

TYPE YGF

GROUNDING PLATE

The irreversible compression ground plate is designed to withstand the rigors of concrete construction. The ground plates are made of high strength, high-conductivity cast copper alloy body with a pure wrought copper compression element. In addition to the tapped NEMA size holes and spacing on the face, the plate comes with a tapped hole on the underside for ease of positioning prior to pouring the concrete. UL467 Listed. Acceptable for direct burial in earth or concrete. Prefilled with PENETROX™ compound and strip sealed.

IEEE-837

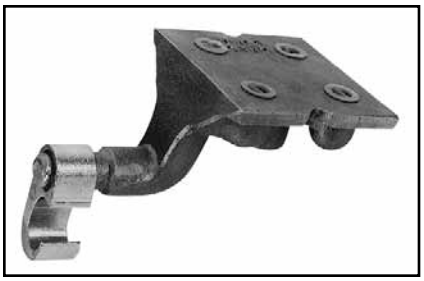

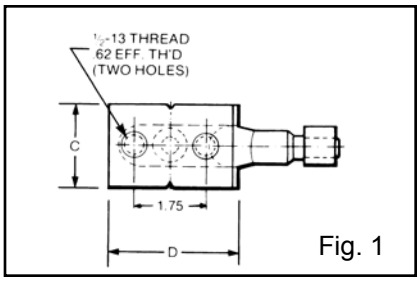

Fig. 1

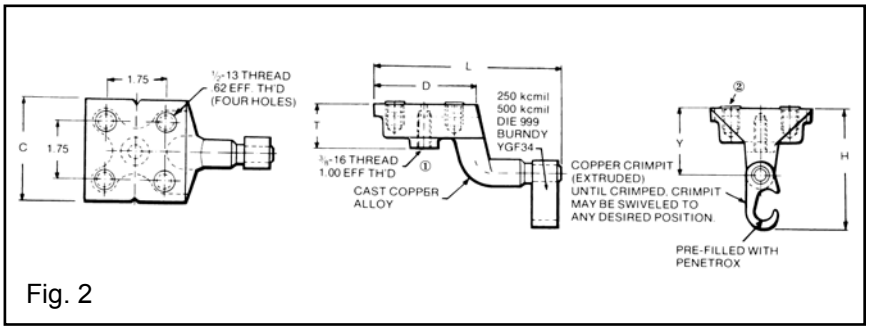

Fig. 2

NOTES:
①This tapped hole may be used to position the grounding plate on a threaded rod prior to placement of the concrete. 3/8-16 thread with 1.00 EFF. Thread is standard. If other thread is required, add appropriate suffix code to catalog number. -50 (1/2-13, .94 EFF. Thread), -62 (5/8-11, .94 EFF. Thread) and -75 (3/4-10, .81 EFF. Thread) Example: YGF34-4N-50 is YGF34-4N with 1/2-13 Thread
② Plastic plugs are provided to keep dirt out of the threaded holes until the attachment of grounding terminals

Catalog Number	Fig. #	C	D	H	L	T	Y	Copper Conductor Range	Tapped Holes		Installation Tools, Die Set Cat. No., and (# of Crimps)		
											HYPRESS™		
									Size	Hole Centers	PAT750/ Y750/Y35/ Y39	Y45 ①	Y46 ②
YGF29-2N	1	2.00	3.25	3.62	5.78	1.31	2.00	2 AWG-250 kcmil	1/2 - 13	1-3/4	U997 (1)	U997 (1)	U997 (1)
YGF29-4N	2	3.25	3.25	3.62	5.78	1.31	2.00	2 AWG-250 kcmil	1/2 - 13	1-3/4	U997 (1)	U997 (1)	U997 (1)
YGF34-2N ③	1	2.00	3.25	4.62	5.40	1.31	2.19	250 kcmil-500 kcmil	1/2 - 13	1-3/4	U1011 (3)	S1011 (2)	P1011 (2)
YGF34-4N ③	2	3.75	3.75	4.62	5.90	1.31	2.19	250 kcmil-500 kcmil	1/2 - 13	1-3/4	U1011 (3)	S1011 (2)	P1011 (2)

①Where a "U" or "PU" die is recommended with the Y45 HYPRESS™, a PT6515 adapter must be used
②Where a "U" or "PU" die is recommended with the Y46 HYPRESS™, a PUADP-1 adapter must be used
③These connectors can only be installed using the Y750, Y45 or Y46 HYPRESS™ with recommended dies, they cannot be installed with the Y35 or Y39 HYPRESS™

TYPE YGIB

GROUNDLINK™

An irreversible compression ground connection which allows attachment to a structural steel standard (angled) or wide flange (parallel) beam. Installed with a required 5-piece die set, Catalog PIBEAMKIT or UIBEAMKIT. Die index 1105. GROUNDLINK™ connectors are made of high-conductivity wrought copper and come pre-filled with PENETROX™ E compound and strip sealed. Order terminal mounting hardware separately.

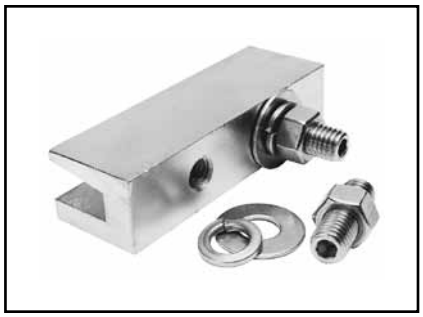

IEEE-837

Connector shipped with thread protection studs only. Order TMHG kits separately.

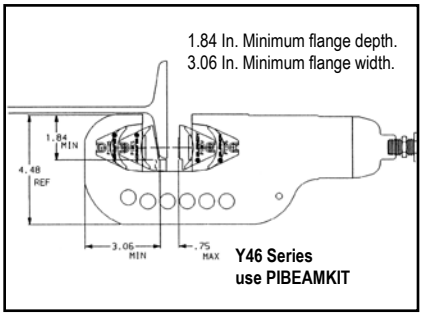

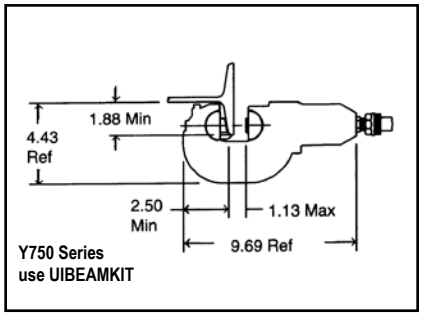

NOTES:
Terminal connector to be ordered separately. When I-beam connector is used with type YGHA terminal, the connection meets IEEE 837. YGA-2N, YA-2N and other BURNDY® 2-hole NEMA copper terminals are suitable.

Order TMHG Terminal Mounting Hardware Kit separately. Kit consists of 2 studs, 2 flat washers, 2 lockwashers and 2 hex nuts.

Using the 1/4 hex key wrench, screw the stud into the connector until stud bottoms out in connector. Install a YGHA terminal, flat washer, lockwasher and hex nut onto stud. Tighten and torque to 480 pound-inches.

Dimensions shown in i-Beam Flange Thickness column reflect the minimum dimensions required on a beam to property install the i-Beam connector.

To correctly determine the appropriate YGIB connector to use based on flange thickness, order either YGIBGAUGE1 or YGIBKIT1 (KIT1 contains wiremike).

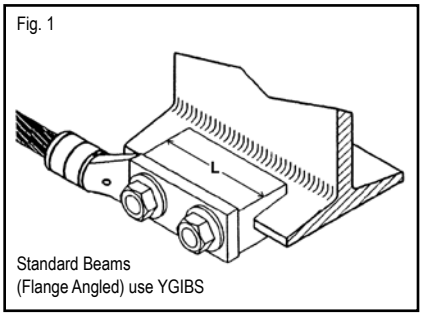

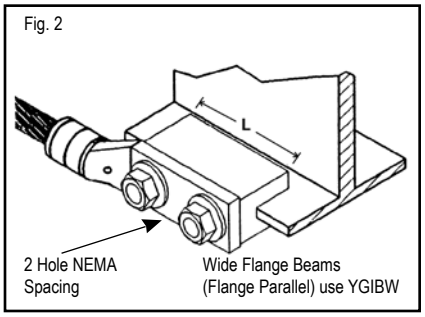

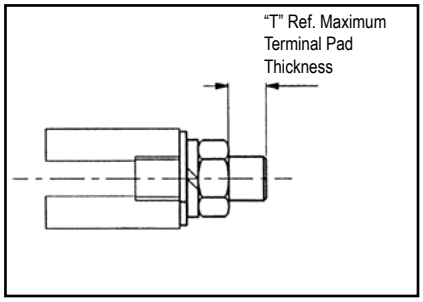

TERMINAL MOUNTING HARDWARE

Catalog Number	"T"
TMHG-42	0.42
TMHG-92	0.92

NOTE: Use TMHG-92 to double stack lugs.

TYPE YGIB

GROUNDLINK™ CONNECTOR
(Continued)

Catalog Number	Copper Conductor Size	Fig. #	L	J	I-Beam Flange Thickness	Suggested Terminals		T
						Copper Conductor	Terminal	
YGIBS28-338-2N	2 AWG-4/0 AWG	1	3.00	1/2-13	0.250" - 0.338"	#2 Str. AWG	YGHA2C-2N	0.26
						1/0 Str. AWG	YGHA25-2N	0.19
YGIBW28-338-2N	2 AWG-4/0 AWG	2	3.00	1/2-13		2/0 Str. AWG	YGHA26-2N	0.26
						4/0 Str. AWG	YGHA28-2N	0.30
YGIBS34-338-2N	250 kcmil-500 kcmil	1	6.00	1/2-13		250 kcmil	YGHA29-2N	0.34 0.40
YGIBW34-338-2N	250 kcmil-500 kcmil	2	6.00	1/2-13		500 kcmil	YGHA34-2N	0.34 0.40
YGIBS28-400-2N	2 AWG-4/0 AWG	1	3.00	1/2-13	0.338" - 0.400"	#2 Str. AWG	YGHA2C-2N	0.26
						1/0 Str. AWG	YGHA25-2N	0.19
YGIBW28-400-2N	2 AWG-4/0 AWG	2	3.00	1/2-13		2/0 Str. AWG	YGHA26-2N	0.26
						4/0 Str. AWG	YGHA28-2N	0.30
YGIBS34-400-2N	250 kcmil-500 kcmil	1	6.00	1/2-13		250 kcmil	YGHA29-2N	0.34 0.40
YGIBW34-400-2N	250 kcmil-500 kcmil	2	6.00	1/2-13		500 kcmil	YGHA34-2N	0.34 0.40
YGIBS28-462-2N	2 AWG-4/0 AWG	1	3.00	1/2-13	0.400" - 0.462"	#2 Str. AWG	YGHA2C-2N	0.26
						1/0 Str. AWG	YGHA25-2N	0.19
YGIBW28-462-2N	2 AWG-4/0 AWG	2	3.00	1/2-13		2/0 Str. AWG 4/0 Str. AWG	YGHA26-2N YGHA28-2N	0.26 0.30
YGIBS34-462-2N	250 kcmil-500 kcmil	1	6.00	1/2-13		250 kcmil	YGHA29-2N	0.34 0.40
YGIBW34-462-2N	250 kcmil-500 kcmil	2	6.00	1/2-13		500 kcmil	YGHA34-2N	0.34 0.40
YGIBS28-550-2N	2 AWG-4/0 AWG	1	3.00	1/2-13	0.462" - 0.550"	#2 Str. AWG	YGHA2C-2N	0.26
						1/0 Str. AWG	YGHA25-2N	0.19
YGIBW28-550-2N	2 AWG-4/0 AWG	2	3.00	1/2-13		2/0 Str. AWG	YGHA26-2N	0.26
						4/0 Str. AWG	YGHA28-2N	0.30
YGIBS34-550-2N	250 kcmil-500 kcmil	1	6.00	1/2-13		250 kcmil	YGHA29-2N	0.34 0.40
YGIBW34-550-2N	250 kcmil-500 kcmil	2	6.00	1/2-13		500 kcmil	YGHA34-2N	0.34 0.40
YGIBS28-613-2N	2 AWG-4/0 AWG	1	3.00	1/2-13	0.550" - 0.613"	#2 Str. AWG	YGHA2C-2N	0.26
						1/0 Str. AWG	YGHA25-2N	0.19
YGIBW28-613-2N	2 AWG-4/0 AWG	2	3.00	1/2-13		2/0 Str. AWG	YGHA26-2N	0.26
						4/0 Str. AWG	YGHA28-2N	0.30
YGIBW34-613-2N	250 kcmil-500 kcmil	2	6.00	1/2-13		500 kcmil	YGHA34-2N	0.34 0.40
YGIBS28-675-2N	2 AWG-4/0 AWG	1	3.00	1/2-13	0.613" - 0.675"	#2 Str. AWG	YGHA2C-2N	0.26
						1/0 Str. AWG	YGHA25-2N	0.19
YGIBW28-675-2N	2 AWG-4/0 AWG	2	3.00	1/2-13		2/0 Str. AWG	YGHA26-2N	0.26
						4/0 Str. AWG	YGHA28-2N	0.30
YGIBS34-675-2N	250 kcmil-500 kcmil	1	6.00	1/2-13		250 kcmil 500 kcmil	YGHA29-2N	0.34 0.40
YGIBW34-675-2N	250 kcmil-500 kcmil	2	6.00	1/2-13		500 kcmil	YGHA34-2N	0.34 0.40
YGIBW28-750-2N	2 AWG-4/0 AWG	3	3.00	1/2-13	0.690" - 0.750"	4/0 Str. AWG	YGHA28-2N	0.30
YGIBW28-1000-2N	2 AWG-4/0 AWG	3	3.00	1/2-13	1.000" -1.060"	2/0 Str. AWG	YGHA2C-2N	0.26
						4/0 Str. AWG	YGHA28-2N	0.30

Blue highlighted items are industry standard and most frequently ordered.

TYPE GSTUD-HY

VERSITAIL™

Structural Steel Grounding Connector

INSTALLATION

1. Weld the VERSITAIL™ to the steel member.

2. Select the proper connector for your specific application.

FOR COMPRESSION CONNECTORS
Select the proper BURNDY® "YGHP," connector. Clean the conductor, join the VERSITAIL™ and the grounding conductor together with the recommended tool and die set, then crimp the connector over the knurled area of the VERSITAIL™.

FOR MECHANICAL CONNECTORS
Select the properly sized BURNDY® connector. Clean the conductor, then apply PENETROX™ E oxide inhibiting compound on the contact area for increased effectiveness and service life. Put the connector over the knurled area of the VERSITAIL™ and apply the recommended torque value for correct installation.

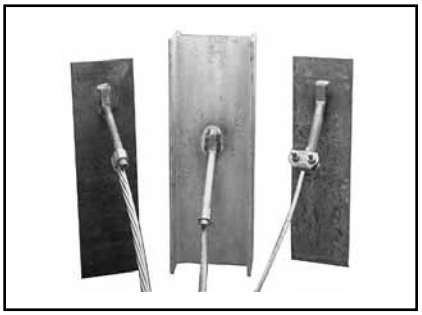

Features & Benefits

- The VERSITAIL™ may be welded to steel surfaces quickly and easily with normal construction equipment.
- The VERSITAIL™ eliminates costly disk grinding and the need to expose virgin metal, the welding process burns through the oxidation and "scale" to establish excellent electrical grounding continuity.
- The VERSITAIL™ may be installed by the welder in the field or at the steel fabricator based on customer preference.
- The VERSITAIL™ pure copper coating over low carbon, hot rolled steel is compatible with standard welding processes, no toxic gasses are generated.
- The VERSITAIL™ knurled surface is copper plated and specifically designed to ensure excellent mechanical gripping and electrical integrity for BURNDY® compression and mechanical connectors in all grounding applications.
- The VERSITAIL™ may be installed during adverse weather conditions thus eliminating costly construction delays.
- Low installation cost.
- No drilling
- No cleaning
- No special preparation
- Low Carbon, hot rolled steel
- Pure copper plated finish

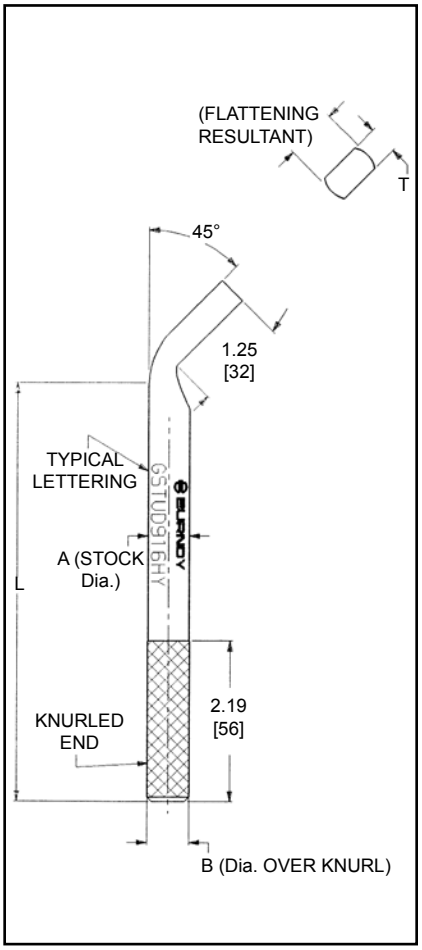

Catalog Number	Nom Rod Size	A	B	L	T	Electrical Equivalent Copper Conductor Size (AWG)*
GSTUD14HY	1/4"	0.25	0.26	4.81	0.19	#6
GSTUD38HY	3/8"	0.38	0.39	5.81	0.25	#3
GSTUD916HY	9/16"	0.56	0.57	5.68	0.38	1/0
GSTUD34HY	3/4"	0.75	0.76	5.81	0.51	4/0

* This is the equivalent rating for continuous service.
Large conductors may be connected using both compression and bolted connectors in potential ground fault applications.

Blue highlighted items are industry standard and most frequently ordered.

TYPES YGT & YTTAG

Static Grounding Receptacle

Type YGT static grounding receptacles are designed for static grounding of equipment. The receptacle is connected to the ground grid with HYGROUND® compression connectors and finished flush with surface to provide a permanent corrosion proof grounding point.

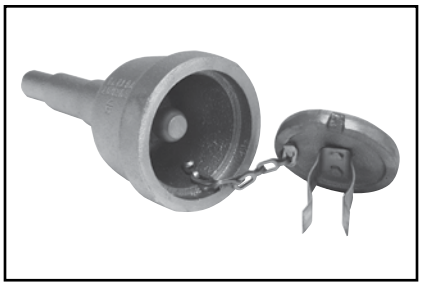

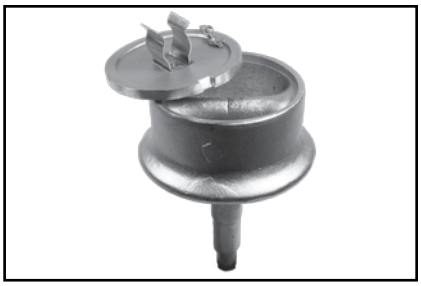

Type YGT
Static Grounding Receptacle
with Cover

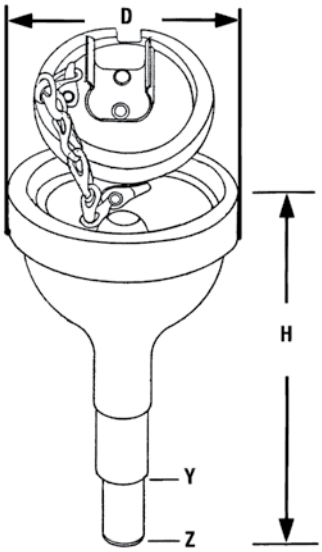

Fig. 1

Type YTTAG Combination
Static Grounding Receptacle
and Aircraft Tie Down Bar

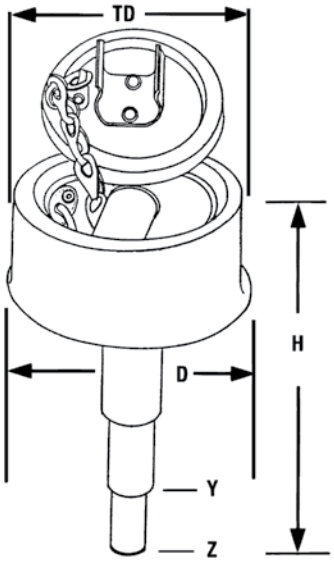

Fig. 2

Catalog Number	Fig. #	HYGROUND® Connector	H	D	Y Dia	Z Dia	TD
YGT275	1	Select suitable YGHR, YGHP or YGLR for 3/4" ground rod and sized to ground conductor.	5.50	2.75	0.75	0.56	-
YTTAG388	2		6.50	4.75	0.75	0.56	4.30

NOTES:
Install YGHR, YGHP or YGLR on Hub Y. Hub Z is inserted into 1/2″ rigid conduit. The conduit is driven into the earth to provide support and provide correct level of receptacle prior to cement pour.

TYPE YG-B

Bus Bar Connector

The BURNDY® YG-B series of compression bus bar connectors are ideally suited for cellular tower, bus bar and flat steel applications and is easier to use than exothermic connections. These high conductivity copper connectors allow attachment of a ground conductor to a bus bar or flat steel, with just one crimp using a BURNDY® Y750/ PAT750-style HYPRESS™ head and the U1105 die set. The exclusive design allows the user to attach tap conductor(s) to 1/4" (1/8" to 1/4" if using the YG14BTC28) thick copper bus bar or flat steel. Most connectors are suitable for 1 or 2 conductors for power or grounding and bonding applications. Prefilled with PENETROX™ compound with the addition of a grit material and strip sealed.

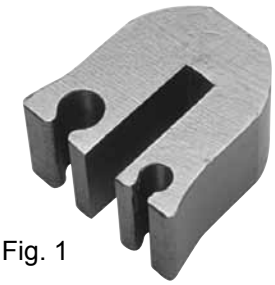

Fig. 1

Fig. 2

Fig. 3

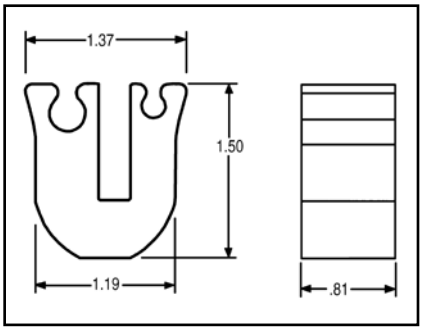

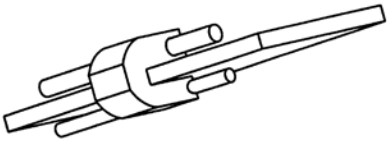

Catalog Number	Figure #	Ground Bar Thickness	BusBar Tap Conductors	Tooling	Installation Die	# of Crimps
YG14B2TC2C6C ①	1	1/4"	#2 Sol. and/or Str. Copper #6 Sol. and/or Str. Copper	PAT750, Y750	U1105	1
YG14B2TC2C2C ②	2	1/4"	#2 #2	PAT750, Y750	U1105	1
YG14BTC28 ③	3	1/8" - 1/4"	4/0 AWG Str. to 1/0 AWG Str. Copper	PAT750, Y750	U1105	1

① UL Listed, CSA Certified, Rated for Direct Burial; can accept 1 or 2 conductors
② U-shaped tap groove can only be used with #2 Solid wire; can accept 1 or 2 conductors; suitable for continuous uncut conductor applications
③ cULus Listed, Rated for Direct Burial; can accept only 1 conductor

Blue highlighted items are industry standard and most frequently ordered.

MECHANICAL GROUNDING CONNECTORS

More than 60 years of technological innovation has made BURNDY® mechanical grounding connectors one of the most widely used, highly respected lines in the industry There is virgually no grounding application problem that this diversified line cannot help solve.

All BURNDY mechanical grounding connectors have been designed for easy installation and for outstanding durability. Only the finest high copper alloys are used in their manufacture, ensuring top performance under the most extreme environmental conditions.

UL467 Listed for direct burial applications in earth or concrete.

TYPES KC, K2C

SERVIT POST™

For Copper Cable to Flat

SERVIT POST™ used to ground one or two cables to steel structures, fence posts, transformers. Also used to tap one or two cables from bus bar. One-wrench installation.

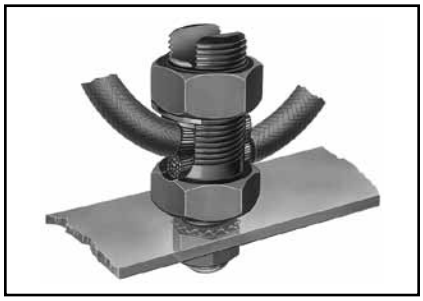

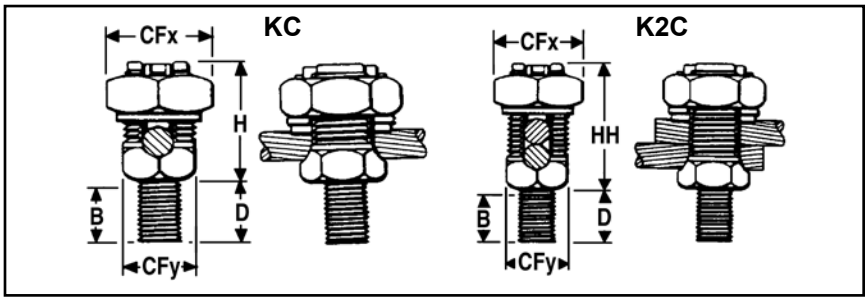

TYPE KC One Wire	TYPE K2C One or Two Wires	Stranded	Solid	Stud Diameter	B	CFx	CFy	D	H	HH
KC15**	K2C15**	12 AWG-9 AWG	12 AWG-8 AWG	1/4 -20	3/8	1/2	3/8	1/2	5/8	7/8
KC15B1	K2C15B1	12 AWG-9 AWG	12 AWG-8 AWG	1/4 -20	7/8	1/2	3/8	1	5/8	7/8
KC17	K2C17	10 AWG-7 AWG	10 AWG-6 AWG	1/4 -20	3/8	5/8	7/16	1/2	7/8	1
KC17B1	K2C17B1	10 AWG-7 AWG	10 AWG-6 AWG	1/4 -20	7/8	5/8	7/16	1	7/8	1
KC20	K2C20	10 AWG-5 AWG	10 AWG-4 AWG	5/16 -18	13/32	11/16	1/2	5/8	7/8	1-1/8
KC20B1	K2C20B1	10 AWG-5 AWG	10 AWG-4 AWG	5/16 -18	27/32	11/16	1/2	1	7/8	1-1/8
KC22	K2C22	10 AWG-3 AWG	10 AWG-2 AWG	3/8 - 16	15/32	3/4	5/8	5/8	1	1-1/4
KC22B1	K2C22B1	10 AWG-3 AWG	10 AWG-2 AWG	3/8 - 16	31/32	3/4	5/8	1-1/8	1	1-1/4
KC23	K2C23	8 AWG-2 AWG	10 AWG-1 AWG	3/8 - 16	15/32	13/16	5/8	5/8	1	1-3/8
KC23B1	K2C23B1	8 AWG-2 AWG	10 AWG-1 AWG	3/8 - 16	31/32	13/16	5/8	1-1/8	1	1-3/8
KC25	K2C25	2 AWG-1/0 AWG	2 AWG-2/0 AWG	1/2 -13	9/16	15/16	3/4	3/4	1-1/8	1-5/8
KC25B1	K2C25B1	2 AWG-1/0 AWG	2 AWG-2/0 AWG	1/2 -13	1-1/16	15/16	3/4	1-1/4	1-1/8	1-5/8
KC26	K2C26	2 AWG-2/0 AWG	2 AWG-3/0 AWG	1/2 -13	17/32	1	7/8	3/4	1-3/8	1-7/8
KC26B1	K2C26B1	2 AWG-2/0 AWG	2 AWG-3/0 AWG	1/2 -13	1-1/16	1	7/8	1-1/4	1-3/8	1-7/8
KC28	K2C28	1 AWG-4/0 AWG	1 AWG-4/0 AWG	5/8 - 11	3/4	1-1/2	1-3/16	1	1-3/4	2-1/4
KC28B1	K2C28B1	1 AWG-4/0 AWG	1 AWG-4/0 AWG	5/8 - 11	1-1/4	1-1/2	1-3/16	1-1/2	1-3/4	2-1/4
KC28G3	K2C28G3	1 AWG-4/0 AWG	1 AWG-4/0 AWG	1/2 - 13	1-1/4	1-1/2	1-3/16	1-1/2	1-3/4	2-1/4
KC31	K2C31	1 AWG-350 kcmil	N/A	5/8 - 11	3/4	1-11/16	1-3/8	1	2-1/4	2-7/8
KC31B1	K2C31B1	1 AWG-350 kcmil	N/A	5/8 - 11	1-1/4	1-11/16	1-3/8	1-1/2	2-1/4	2-7/8
KC34	K2C34	3/0 AWG-500 kcmil	N/A	3/4 -10	1	2	1-5/8	1-1/4	2-3/8	3-1/4
KC34B1	K2C34B1	3/0 AWG-500 kcmil	N/A	3/4 -10	1-1/2	2	1-5/8	1-3/4	2-3/8	3-1/4

NOTE:

** Not UL 467 rated

Add "-NSP" suffix to catalog numbers to have connector supplied with split lockwasher and nut.

Blue highlighted items are industry standard and most frequently ordered.

TYPE KCKF

Bulkhead Ground Connector

The "Bulkhead" connector is designed to allow a ground wire to be connected from the inside of a box or enclosure to the outside of a box or enclosure.

This new connector is supplied in kit form with a male SERVIT POST™, female SERVIT®, (2) stainless steel washers, split lock washer and sealing washer.

The available "Application Guideline" document helps describe the application with visuals and installation examples.

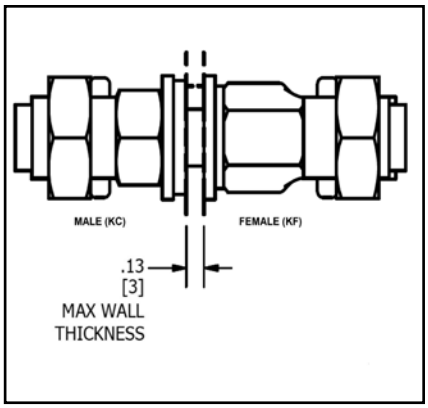

Features & Benefits

- Provides an easy way to connect ground wires "through" an enclosure wall
- Includes Male SERVIT POST™, Female SERVIT®, (2) Stainless Steel Washers, Split Lock Washer, Sealing Washer
- Split Lock Washer allows adjustment of conductor orientation
- Made of Silicon Bronze material (connectors) and Stainless Steel Hardware, Sealing Washer
- Meets NEMA 4X requirements when installed correctly
- Application Guideline document available
- Industry proven split bolt/SERVIT POST™ technology

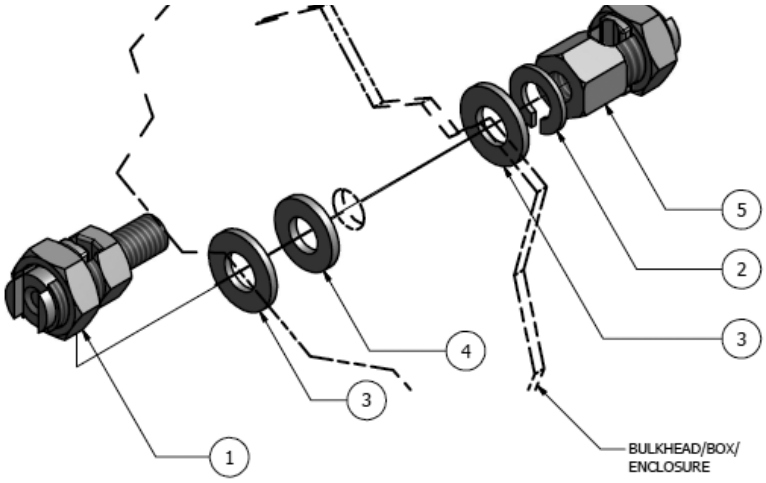

	Qty	Description
1	1	Male Servit Post
2	1	Stainless Steel Split Lock Washer*
3	2	Stainless Steel Flat Washer*
4	1	Sealing Washer*
5	1	Female SERVIT®

*One flat washer and sealing washer to be installed on outside of box or, where applicable, to side of wall exposed to atmospheric or contaminated conditions. Remaining hardware to be mounted to opposite side of the wall as shown.

Catalog Number	ACCOMMODATES			NUT TORQUE IN-LBS [N-M]	MAX. THRU HOLE
	AWG		METRIC		
	STRANDED	SOLID	STRANDED		
KCKF23	#8 (.146) - #2 (.292)	#10 (.102) - #1 (.289)	10mm^2 (4.1) - 35mm^2 (6.5)	275 [31.1]	7/16
KCKF25	#2 (.292) - 1/0 (.373)	#2 (.258) - 2/0 (.365)	35mm^2 (6.5) - 50mm^2 (9.3)	385 [43.5]	9/16
KCKF28	#1 (.332) - 4/0 (.528)	#1 (.289) - 4/0 (.460)	50mm^2 (9.3) - 95mm^2 (12.8)	500 [56.5]	11/16

Notes:
Dimensions in () are cable diameters.
Diameters of AWG wires are in inches.
Diameters for metric wires are given in mm.

Blue highlighted items are industry standard and most frequently ordered.

TYPES KC-J12, EQC632C

Transformer Ground Connectors

For Copper

Fits all standard EEI-NEMA distribution transformers as tank grounding terminal.

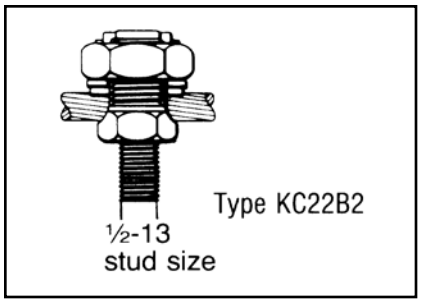

Catalog Number	Ranges
KC22J12T13	8 Sol. - 2 Sol.
KC26	2 Sol. - 2/0 Str.
KC34J12T13	3/0 - 500 Str.
EQC632C	8 Sol. - 2 Str.

TYPE KS

SERVIT®

For Copper

UL467 Listed for direct burial applications in earth or concrete. Compact, highstrength, high copper alloy SERVIT® split-bolt has free-running threads and easy to grip wrench flats. Highly resistant to cracking and corrosion.

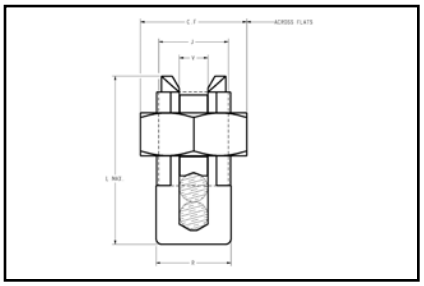

Catalog Number	Cross Flats	L	W	Copper Conductor Range	Rebar with (1) #8 Sol. Cu	Recommended Tightening Torque (in-lb)
KS15	0.50	0.85	0.38	10 - 8 Str.	14 Str.	#8
KS17	0.63	1.14	0.45	8 Str. - 6 Sol.	14 Str.	#6
KS20	0.69	1.20	0.51	8 Str. - 4 Sol.	14 Str.	#4
KS22	0.75	1.50	0.60	6 Str. - 2 Sol.	14 Str.	#2
KS23	0.82	1.54	0.62	6 Str. - 2 Str.	14 Str.	#1
KS25	0.94	1.77	0.73	4 Str. - 1/0 Str.	14 Str.	2/0
KS26	1.05	1.94	0.82	2 Str. - 2/0 Str.	14 Str.	3/0
KS27	1.36	1.86	1.17	1 Str. - 3/0 Str.	8 Sol.	—
KS29	1.36	2.07	1.17	1 Str. - 250	8 Str.	4/0
KS31	1.70	2.51	1.41	1/0 Str. - 350	1/0 Str.	—
KS34	1.82	2.79	1.48	2/0 Str. - 500	2/0 Str.	—

Blue highlighted items are industry standard and most frequently ordered.

TYPE GKA

For Copper

UL467 Listed for direct burial applications in earth or concrete. One-piece body construction insures mechanical integrity in an underground environment. Supplied with stainless steel headless screw, the GKA25SB and GKA28SB have silicon bronze hardware.

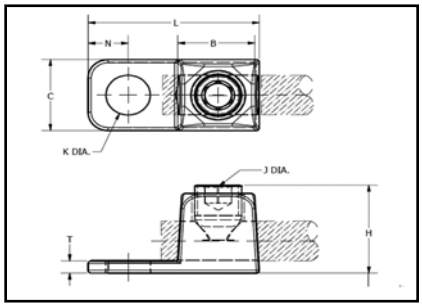

Catalog Number	Cable Range	B	C	H	J Dia.	K	L
GKA8C*	10 AWG-8 AWG	0.31	0.38	0.58	#12-24 (Slot)	0.21	0.81
GKA4C*	14 AWG-4 AWG	0.46	0.54	0.71	5/16-24 (Slot)	0.28	1.13
GKA25	4 AWG-1/0 AWG	0.69	0.75	0.94	1/2-20 (Hex)	0.42	1.69
GKA28	1 AWG-4/0 AWG	0.81	0.94	1.25	5/8-18 (Hex)	0.42	1.94
GKA25SB	4 AWG-1/0 AWG	0.69	0.75	0.94	1/2-20 (Hex)	0.42	1.69
GKA28SB	1 AWG-4/0 AWG	0.81	0.94	1.25	5/8-18 (Hex)	0.42	1.94

* GKA8C, GKA4C are cULus Listed.

TYPE KPB

For Copper

UL467 Listed for direct burial in earth or concrete. UL486 listed. This exclusive BURNDY® design accommodates #10 - #4 copper where continuous conductor runs are preferable.

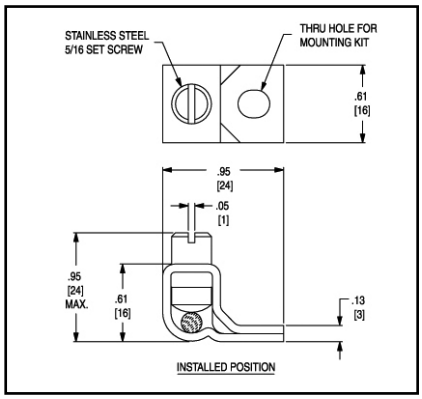

Catalog Number	Copper Cable Range	Stud Hole
KPB4CG1①	10 AWG-4 AWG	#10

①Can be assembled with optional TMH322SS stainless steel hardware kit, ordered separately.

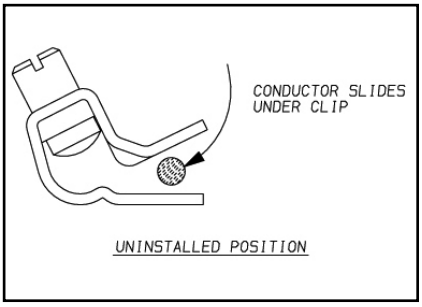

Blue highlighted items are industry standard and most frequently ordered.

TYPES CL50-1 & CL50-1TN

COPPER LAY-IN QIKLUG™

For Copper

The Lay-In QIKLUG™ is manufactured from high strength pure electrolytic copper to ensure maximum strength and conductivity. UL467 Listed for direct burial in earth or concrete. The open-faced design allows for fast layin of the conductor without the need for cutting or breaking. Stainless steel screws used for excellent corrosion resistance.

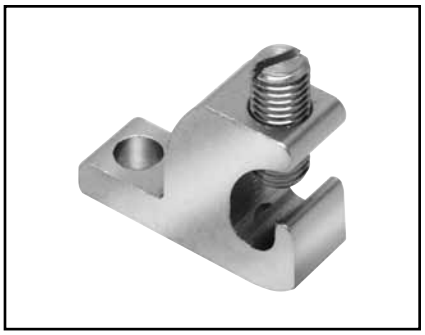

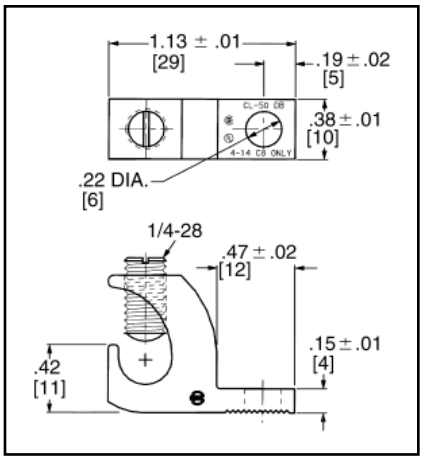

Catalog Number	Conductor Range	Stud Hole
CL50-1	14 AWG-4 AWG	#10
CL50-1TN	14 AWG-4 AWG	#10
CL50-1TN BULK	14 AWG-4 AWG	#10

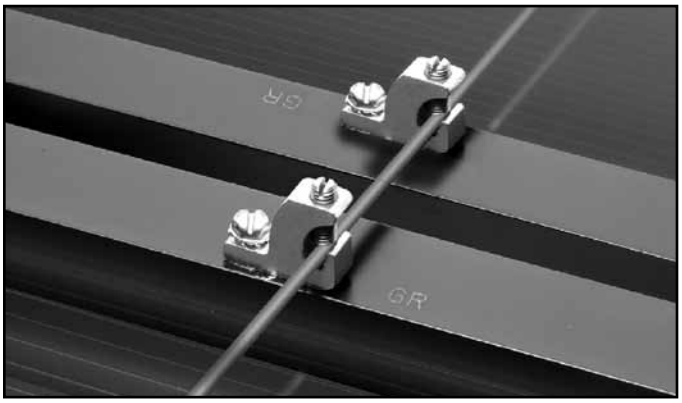

Photo above shows a typical solar panel installation using CL50-1TN connectors.

TYPE CL

COPPER LAY-IN QIKLUG™

FOR COPPER

Manufactured for maximum strength and conductivity, these lay-in lugs allow for continuous runs of conductor and are well suited as terminations as well. Tin-plated, set screw style connectors, three sizes cover a range from #14AWG to 250 kcmil. CL3/0-516TN and CL250-516TN are UL Listed and CSA certified. CL1/0-14TN UL Listed for grounding and CSA certified. 90° C rated. Suitable for copper conductors only.

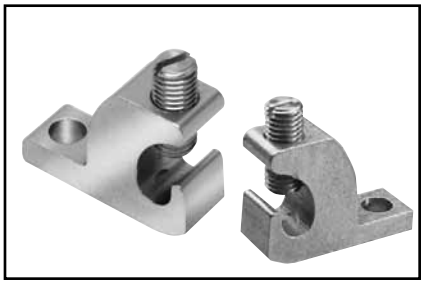

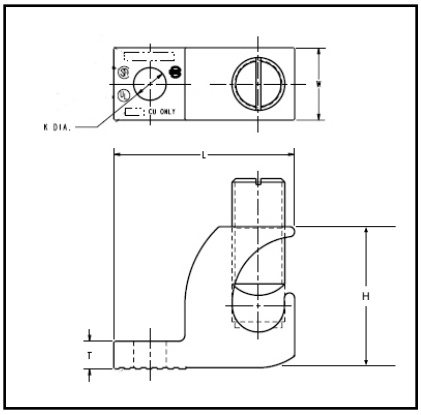

Catalog Number	Wire Range Copper	H	W	L	T	K Dia.	Hex Size
CL1/0-14TN	#14 - 1/0 AWG	1.17	0.60	1.50	0.22	0.27	7/16-20 (Slotted)
CL3/0-516TN	#6 - 3/0 AWG	1.56	0.80	2.00	0.30	0.33	9/16-18 (0.25 Hex)
CL250-516TN	#6 AWG - 250 kcmil	1.79	0.80	2.20	0.30	0.33	9/16-18 (0.25 Hex)

Blue highlighted items are industry standard and most frequently ordered.

WEEB™ Washers and other products for Solar Photovoltaic applications

WILEY is most widely recognized for the invention of the WEEB™ Washer (Washer, Electrical Equipment Bond). WILEY has always been dedicated to developing and providing innovative, high-quality solutions that address the evolving needs of the PV industry in bonding, grounding, and wire management. Our engineers work closely with solar manufacturers and installers, and develop products to enable customers to install PV systems safely, efficiently, and cost effectively. BURNDY now offers the complete line of unique solutions for Balance of System components for photovoltaic applications.

For system compatibility please check the website: www.we-llc/technical.html .

WEEB-DSK516
Installed on a purlin.

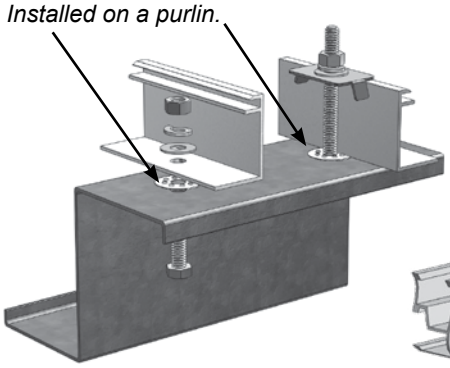

WEEB-BNDJMP6.7
Installed on a mounting rail.

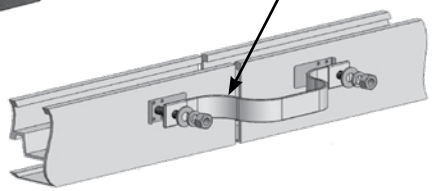

WEEB-LUG-6.7

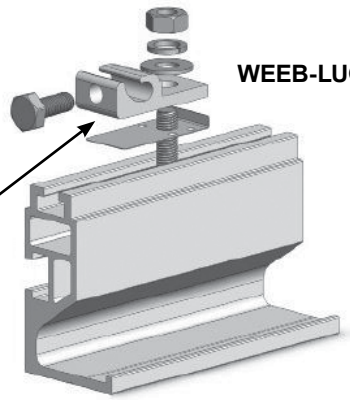

WEEB-LUG-6.7
Installed on the channel of a mounting rail.

WEEB™
Washer, Electrical Equipment Bond

- Bonds PV modules to mounting structures
- Specialized teeth on washer embeds into anodized aluminum to establish gas-tight electrical connection
- Corrosion resistant 304 Stainless Steel
- Stock parts for most popular mounting systems
- Custom WEEB™ washer designs available
- ETL Listed to UL 467
- UL Recognized to UL 2703

WEEB™ Lug

- Corrosion resistant, tin plated, copper lay-in lug
- Features WEEB™ washer technology
- Available assembled or unassembled
- ETL Listed to UL 467

WEEB™ Bonding Jumper

- Corrosion resistant, tin plated, copper braid
- Maintains electrical bond across spliced rails
- Features WEEB™ washer technology
- Equivalent to #6 AWG copper conductor
- Available assembled or unassembled
- ETL Listed to UL 467

Blue highlighted items are industry standard and most frequently ordered.

WEEB™ Washers and other products for Solar Photovoltaic applications

Cable Clips

- Attaches to module frames or racking systems
- Corrosion resistant 304 Stainless Steel
- Easy installation and removal
- Prevents damage to cables
- Sized for USE-2, PV, and Micro Inverter cable leads

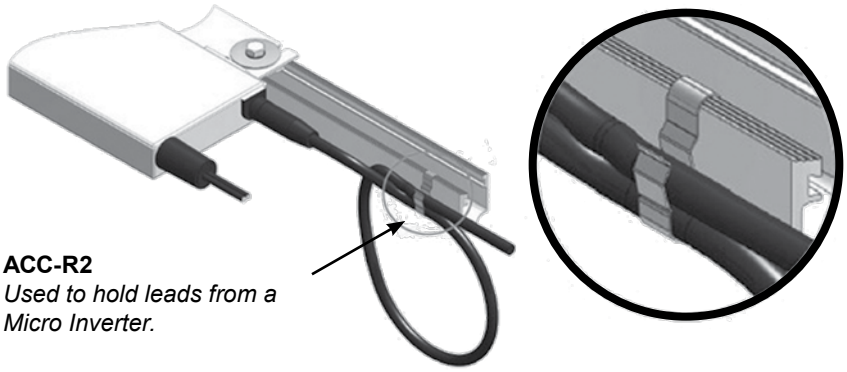

ACC-R2
Used to hold leads from a Micro Inverter.

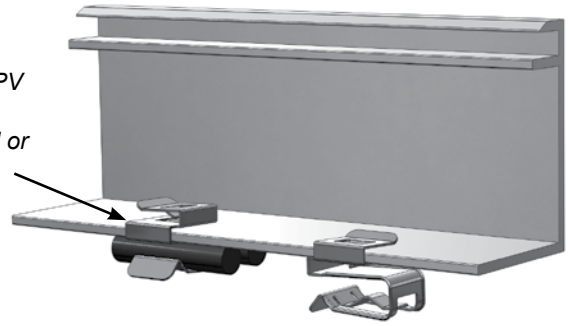

ACC-F90
Used to hold USE-2 or PV wire. Mounts to module frame in either a vertical or horizontal orientation.

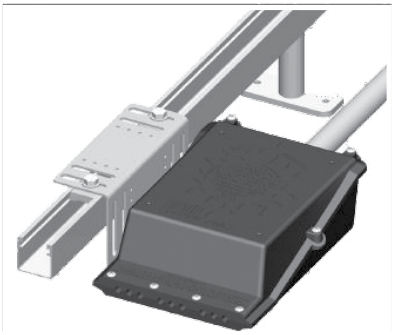

Rail Mounted

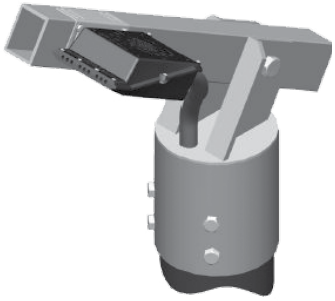

Pole Mounted

Conduit Entry Box

- Pass-through or combiner box with mounting bracket
- Compatible with a variety of conduit
- Two-piece protective enclosure for transitioning PV array wire to other wiring means
- ETL Listed to UL 1741 Listed
- NEMA 3R outdoor rated
- Available up to 4 strings

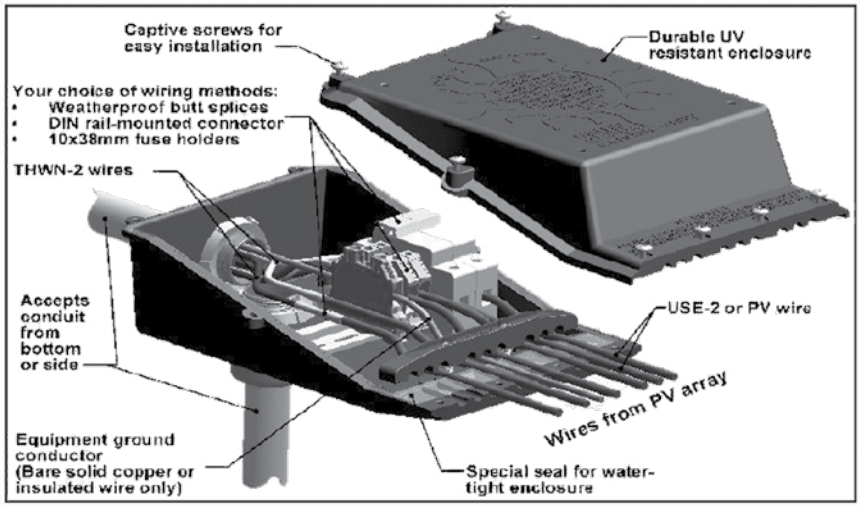

Blue highlighted items are industry standard and most frequently ordered.

TYPE GAR

For Parallel or 90° Copper Cable Connection to Rod or Pipe with the Same Connector

High copper alloy ground connector for joining a range of cable, parallel or at right angles to rod or tube. Especially good for fence posts. High copper alloy cast body with DURIUM™ U-bolts, nuts and lockwashers, permit entire connection to be buried in ground or concrete without danger of corrosion.

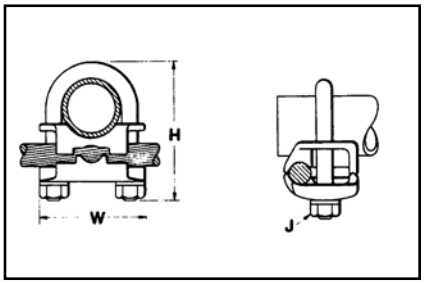

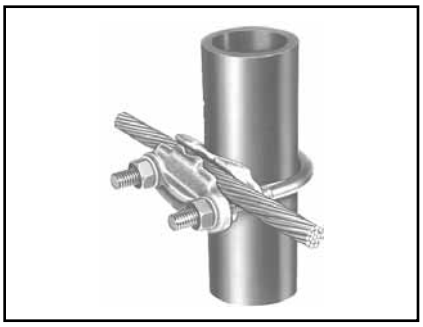

Wire at Right Angle to Pipe

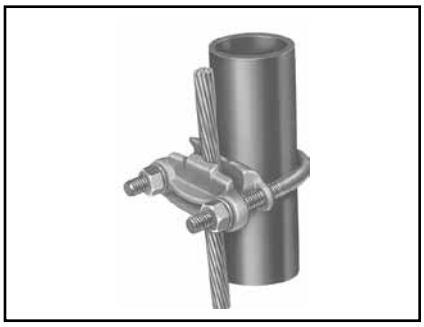

Wire Parallel to Pipe

Features & Benefits

- Wire to Rebar
- Fence Post Grounding Connector
- Wire to Pipe
- One-wrench installation
- UL467 Listed
- Acceptable for direct burial

Catalog Number	Conductor				H	J	W
	Tube I.P.S.*	Rod Size or O.D. Range	Rebar Size	Cable Range			
GAR114C	1/4	1/2	—	8 Sol. - 4 Str.	2-1/2	3/8	1-7/8
GAR1126	1/4	1/2	—	4 Sol. - 2/0 Str.	2-1/2	3/8	1-7/8
GAR1129	1/4	1/2	—	2/0 Sol. - 250	2-1/2	3/8	1-7/8
GAR644C	3/8	5/8 - 3/4	5 - 6	8 Sol. - 4 Str.	2-7/8	3/8	2-1/8
GAR6426	3/8	5/8 - 3/4	5 - 6	4 Sol. - 2/0 Str.	2-7/8	3/8	2-1/8
GAR6429	3/8	5/8 - 3/4	5 - 6	2/0 Sol. - 250	2-7/8	3/8	2-1/8
GAR6434	3/8	5/8 - 3/4	5 - 6	300-500	3-1/2	1/2	2-1/2
GAR144C	1/2-3/4	7/8 - 1	7 - 8	8 Sol. - 4 Str.	2-3/4	3/8	2-3/8
GAR1426	1/2-3/4	7/8 - 1	7 - 8	4 Sol. - 2/0 Str.	3	3/8	2-3/8
GAR1429	1/2-3/4	7/8 - 1	7 - 8	2/0 Sol. - 250	3	3/8	2-3/8
GAR1434	1/2-3/4	7/8 - 1	7 - 8	300-500	3-3/4	1/2	2-3/4
GAR154C	1	1-1/8 - 1-1/4	9 - 10	8 Sol. - 4 Str.	2-7/8	3/8	2-5/8
GAR1526	1	1-1/8 - 1-1/4	9 - 10	4 Sol. - 2/0 Str.	2-7/8	3/8	2-5/8
GAR1529	1	1-1/8 - 1-1/4	8 - 9	2/0 Sol. - 250	3-3/8	3/8	2-5/8
GAR1534	1	1-1/8 - 1-1/4	9 - 10	300-500	4-1/2	1/2	2-5/8
GAR164C	1-1/4	1-3/8 - 1-1/2	11	8 Sol. - 4 Str.	3-1/2	3/8	3
GAR1626	1-1/4	1-3/8 - 1-1/2	11	4 Sol. - 2/0 Str.	3-1/2	3/8	3
GAR1629	1-1/4	1-3/8 - 1-1/2	11	2/0 Sol. - 250	3-1/2	3/8	3
GAR1634	1-1/4	1-3/8 - 1-1/2	11	300-500	4-1/4	1/2	3-3/8

* This is the "Trade" Pipe Size reference.

Blue highlighted items are industry standard and most frequently ordered.

TYPE GAR
(Continued)

Catalog Number	Conductor				H	J	W
	Tube I.P.S.*	Rebar Size	Rod Size or O.D. Range	Cable Range			
GAR174C	1-1/2	—	1-5/8 - 1-7/8	8 Sol. - 4 Str.	4	3/8	3-1/4
GAR1726	1-1/2	—	1-5/8 - 1-7/8	4 Sol. - 2/0 Str.	4	3/8	3-1/4
GAR1729	1-1/2	—	1-5/8 - 1-7/8	2/0 Sol. - 250	4	3/8	3-1/4
GAR1734	1-1/2	—	1-5/8 - 1-7/8	300 - 500	4-5/8	1/2	2-5/8
GAR184C	2	—	2-2 - 3/8	8 Sol. - 4 Str.	4-1/4	3/8	3-3/4
GAR1826	2	—	2-2 - 3/8	4 Sol. - 2/0 Str.	4-1/4	3/8	3-3/4
GAR1829	2	—	2-2 - 3/8	2/0 Sol. - 250	4-1/2	3/8	3-3/4
GAR1834	2	—	2-2 - 3/8	300 - 500	5-1/4	1/2	4-1/8
GAR194C	2-1/2	—	2-1/2 - 2-7/8	8 Sol. - 4 Str.	5	3/8	4-1/4
GAR1926	2-1/2	—	2-1/2 - 2-7/8	4 Sol. - 2/0 Str.	5	3/8	4-1/4
GAR1929	2-1/2	—	2-1/2 - 2-7/8	2/0 Sol. - 250	5	3/8	4-1/4
GAR1934	2-1/2	—	2-1/2 - 2-7/8	300 - 500	5-5/8	1/2	4-5/8
GAR204C	3	—	3 - 3-1/2	8 Sol. - 4 Str.	5-5/8	3/8	4-3/4
GAR2026	3	—	3 - 3-1/2	4 Sol. - 2/0 Str.	5-5/8	3/8	4-3/4
GAR2029	3	—	3 - 3-1/2	2/0 Sol. - 250	5-5/8	3/8	4-3/4
GAR2034	3	—	3 - 3-1/2	300 - 500	6-3/8	1/2	5-1/4
GAR214C	3-1/2	—	3-1/2 - 4	8 Sol. - 4 Str.	6-1/4	3/8	5-3/8
GAR2126	3-1/2	—	3-1/2 - 4	4 Sol. - 2/0 Str.	6-1/4	3/8	5-3/8
GAR2129	3-1/2	—	3-1/2 - 4	2/0 Sol. - 250	6-1/4	3/8	5-3/8
GAR2134	3-1/2	—	3-1/2 - 4	300 - 500	6-3/4	1/2	5-3/4
GAR224C	4	—	4 - 4-1/2	8 Sol. - 4 Str.	6-3/8	3/8	5-7/8
GAR2226	4	—	4 - 4-1/2	4 Sol. - 2/0 Str.	6-3/8	3/8	5-7/8
GAR2229	4	—	4 - 4-1/2	2/0 Sol. - 250	6-3/8	3/8	5-7/8
GAR2234	4	—	4 - 4-1/2	300 - 500	6-7/8	1/2	6-1/4
GAR244C	5	—	—	8 Sol. - 4 Str.	7-3/4	3/8	6-7/8
GAR2426	5	—	—	4 Sol. - 2/0 Str.	7-3/4	3/8	6-7/8
GAR2429	5	—	—	2/0 Sol. - 250	7-3/4	3/8	7-1/4
GAR2434	5	—	—	300 - 500	8-5/8	1/2	7-1/4
GAR8629	6	—	—	2/0 Sol. - 250	8-13/16	1/2	8-3/8
GAR8634	6	—	—	300 - 500	8-13/16	1/2	8-3/8

* This is the "Trade" Pipe Size reference.

NOTE:
Contact BURNDY® for additional pipe and wire size combinations not shown.

TYPES GAR-BU AND GAR3902 SERIES

Ground Connectors

Type GAR-BU is a high-conductivity copper ground connector for connecting a small to medium range copper ground conductor to water pipe as well as structural and reinforcing rod shapes. Universal acceptance of several sizes of cylindrical shapes makes this suitable for industrial construction and maintenance work as well as cathodic protection. Cable clamp swivels to permit parallel grounding of one pipe or 90° degree cable run for grounding several parallel pipes. Single wrench installation. UL467 Listed and CSA Certified.

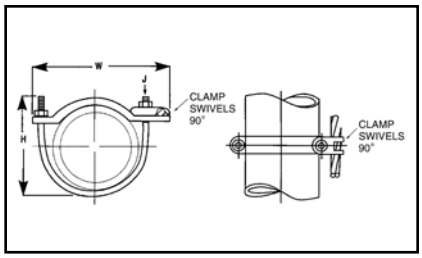

Features & Benefits

- Cable clamp swivels at 90°
  - ◊ Permits parallel grounding of one pipe or a 90° cable run for grounding several parallel pipes.
- One-wrench installation
  - ◊ Simplified installation.
- DURIUM™ silicon bronze hardware (-BU Series)*
  - ◊ Long lasting corrosion resistance and acceptable for direct burial in earth or concrete.
- UL467 Listed
  - ◊ Provides quality assurance to recognized industry NEC standards from an independent party.

Catalog Number	Cable Range	IPS Size **	O.D. Range	H	J	W	Recommended Tightening Torque
GAR3902-BU ①	#4- 4/0 AWG	1/2-1	0.84 - 1.32	3.50	3/8" - 16	3.25	240 in. - lbs.
GAR3903-BU ①	#4- 4/0 AWG	1 1/4-2	1.66 - 2.38	4.00	3/8" - 16	4.25	240 in. - lbs.
GAR3904-BU ①	#4- 4/0 AWG	2 1/2-3 1/2	2.88 - 4.00	6.50	3/8" - 16	6.00	240 in. - lbs.
GAR3905-BU ①	#4- 4/0 AWG	4-5	4.50 - 5.56	7.50	3/8" - 16	7.50	240 in. - lbs.
GAR3906-BU ①	#4- 4/0 AWG	6	6.62	8.50	3/8" - 16	8.62	240 in. - lbs.
GAR3907-BU ①	#4- 4/0 AWG	8	8.62	10.00	3/8" - 16	10.62	240 in. - lbs.
GAR3908-BU ①	#4- 4/0 AWG	10	10.75	12.00	3/8" - 16	12.75	240 in. - lbs.
GAR3909-BU ①	#4- 4/0 AWG	12	12.75	14.00	3/8" - 16	14.75	240 in. - lbs.
GAR3902	#4- 4/0 AWG	1/2-1	0.84 - 1.32	3.50	3/8" - 16	3.25	240 in. - lbs.
GAR3903	#4- 4/0 AWG	1 1/4-2	1.66 - 2.38	4.00	3/8" - 16	4.25	240 in. - lbs.
GAR3904	#4- 4/0 AWG	2 1/2-3 1/2	2.88 - 4.00	6.50	3/8" - 16	6.00	240 in. - lbs.
GAR3905	#4- 4/0 AWG	4-5	4.50 - 5.56	7.50	3/8" - 16	7.50	240 in. - lbs.
GAR3906	#4- 4/0 AWG	6	6.62	8.50	3/8" - 16	8.62	240 in. - lbs.
GAR3907	#4- 4/0 AWG	8	8.62	10.00	3/8" - 16	10.62	240 in. - lbs.
GAR3908	#4- 4/0 AWG	10	10.75	12.00	3/8" - 16	12.75	240 in. - lbs.
GAR3909	#4- 4/0 AWG	12	12.75	14.00	3/8" - 16	14.75	240 in. - lbs.

NOTE:
① Type GAR-BU is supplied with DURIUM™ silicon bronze hardware and is Listed for direct burial.

** Refer to Section O for tube dimensions.

TYPE GAR-RB

For Reinforcement Bar

NOTE:
UL 467 Listed for direct burial in earth or concrete.

Catalog Number	Rebar	I.P.S.	O.D. Range	Rod Size	Copper Conductor	
					Min.	Max.
GAR644C-RB	#3 - 6 (0.38 - 0.75)	3/8	0.63 - 0.75	5/8-3/4	8 Sol.	4 Str.

Blue highlighted items are industry standard and most frequently ordered.

TYPE GAR-TC

Water Pipe Ground Connector

Type GAR-TC is a high-conductivity copper ground connector that features a pre-drilled pad, allowing a 2-hole compression terminal to be directly connected to water pipe as well as structural and reinforcing rod shapes. Universal acceptance of several sizes of cylindrical shapes makes this suitable for industrial construction and maintenance work as well as telecommunications grounding. Terminal may be mounted parallel, 45° or 90° degrees to the pipe. Acceptable for direct burial.

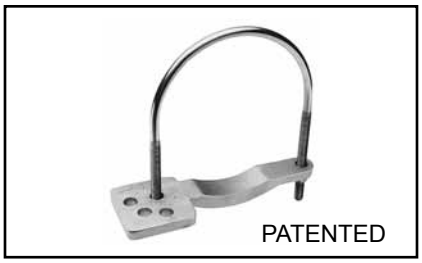

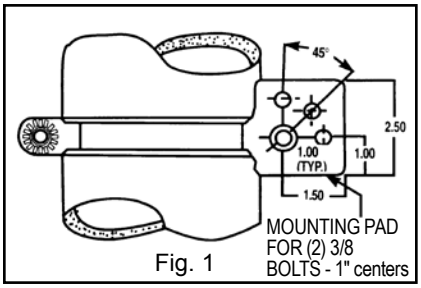

Fig. 1

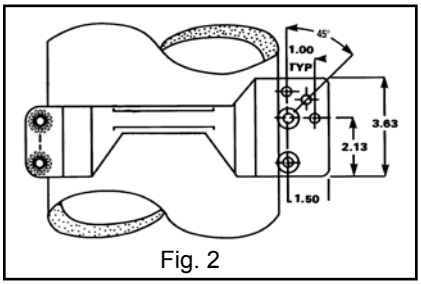

Fig. 2

Features & Benefits

- Large, smooth connector contact area between pipe and ground clamp
  - ◊ Provides large surface contact area to maximize contact area between connector and pipe.
- The GAR-TC mounting pad permits parallel, 45° or 90° angle connections to the pipe
  - ◊ Provides maximum flexibility for field installation.
- Pre-drilled pad for (2) 3/8" bolts on 1" centers
  - ◊ Allows direct mounting of (2) hole compression terminals up to 750 kcmil to pipe.
- DURIUM™ silicon bronze hardware
  - ◊ Provide long lasting corrosion resistance acceptable for direct burial in earth or concrete.
- One-wrench installation
  - ◊ Simplified installation.
- UL467 Listed
  - ◊ Provides quality assurance to recognized industry NEC standards from an independent party. Type GAR-TC is acceptable for direct burial.

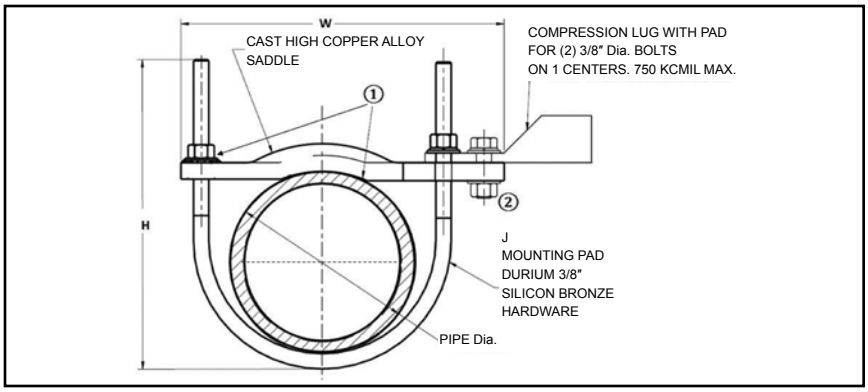

Catalog Number	Figure #	Accommodates		H	J	W	Recommended Torque
		I.P.S. **	O.D. Size				
GAR3902TC	1	1/2-1	0.84 - 1.32	3.50	3/8	3.75	240
GAR3903TC	1	1 1/4-2	1.66 - 2.38	4.00	3/8	4.75	240
GAR3904TC	1	2 1/2-3 1/2	2.88 - 4.00	6.50	3/8	6.50	240
GAR3905TC	1	4-5	4.50 - 5.56	7.50	3/8	8.00	240
GAR3906TC	1	6	6.62	8.50	3/8	9.12	240
GAR3907TC	2	8	8.62	10.00	3/8	11.25	240
GAR3908TC	2	10	10.75	12.00	3/8	13.25	240
GAR3909TC	2	12	12.75	14.00	3/8	15.25	240

NOTES:

** Refer to Section O for tube dimensions.

① Add suffix "-TNET" for electro-tin plated connector and electro-tin plated

DURIUM™ silicon bronze hardware. Tin plated catalog number includes mounting hardware for second bolt hole.

② **OPTIONAL MOUNTING HARDWARE**
TMH-289 includes (1) 38X125HEB bolt, (1) 38CHEN nut, (1) 38SW split washer and (2) 38FW flat washers, ordered separately.

Clean pipe surface beneath saddle until virgin metal is exposed, install GAR-TC ground connector and for maximum conductivity, apply PENETROX™ E oxide inhibiting compound around perimeter of saddle.

Blue highlighted items are industry standard and most frequently ordered.

TYPE GD

Cable to Rod/Tube Ground Connector

For Two Copper Cables
to Rod or Tube

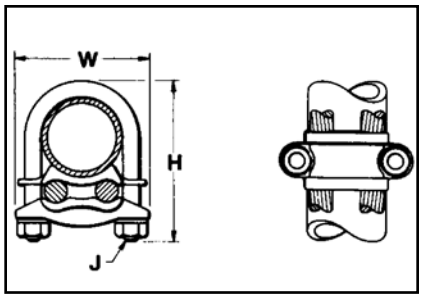

High copper alloy ground connector for joining a range of two parallel cables to rod or pipe. Especially good for grounding fence posts. High copper alloy cast body with DURIUM™ U-bolts, nuts, and lockwashers make the GD suitable for burial in ground or concrete. One-wrench installation. UL467 Listed. Acceptable for direct burial in earth or concrete.

Catalog Number	Conductor			H	J	W
	Tube I.P.S. **	Rod Size or O.D. Range	Cable			
GD1526	1	1-1/8 - 1-1/4	4 Sol. - 2/0 Str.	3-3/8	3/8	2-5/8
GD1529	1	1-1/8 - 1-1/4	2/0 Sol. - 250	3-3/8	3/8	2-5/8
GD1626	1-1/4	1-3/8 - 1-1/2	4 Sol. - 2/0 Str.	3-1/2	3/8	3
GD1629	1-1/4	1-3/8 - 1-1/2	2/0 Sol. - 250	3-1/2	3/8	3-1/4
GD174C	1-1/2	1-5/8 - 1-7/8	8 Sol. - 4 Str.	4	3/8	3-1/4
GD1726	1-1/2	1-5/8 - 1-7/8	4 Sol. - 2/0 Str.	4	3/8	3-1/4
GD1729	1-1/2	1-5/8 - 1-7/8	2/0 Sol. - 250	4	3/8	3-1/4
GD1734	1-1/2	1-5/8 - 1-7/8	300 - 500	4-5/8	1/2	3-5/8
GD184C	2	2 - 2-3/8	8 Sol. - 4 Str.	4-3/8	3/8	3-3/4
GD1826	2	2 - 2-3/8	4 Sol. - 2/0 Str.	4-3/8	3/8	3-3/4
GD1829	2	2 - 2-3/8	2/0 Sol. - 250	4-3/8	3/8	3-3/4
GD1834	2	2 - 2-3/8	300 - 500	5-3/8	1/2	4-1/8
GD194C	2-1/2	2-1/2 - 2-7/8	8 Sol. - 4 Str.	5	3/8	4-1/4
GD1926	2-1/2	2-1/2 - 2-7/8	4 Sol. - 2/0 Str.	5	3/8	4-1/4
GD1929	2-1/2	2-1/2 - 2-7/8	2/0 Sol. - 250	5	3/8	4-1/4
GD1934	2-1/2	2-1/2 - 2-7/8	300 - 500	5	1/2	4-5/8
GD204C	3	3 - 3-1/2	8 Sol. - 4 Str.	5-5/8	3/8	4-7/8
GD2026	3	3 - 3-1/2	4 Sol. - 2/0 Str.	5-5/8	3/8	4-7/8
GD2029	3	3 - 3-1/2	2/0 Sol. - 250	5-5/8	3/8	4-7/8
GD2034	3	3 - 3-1/2	300 - 500	6-3/8	1/2	5-1/4
GD214C	3-1/2	3-1/2 - 4	8 Sol. - 4 Str.	6-1/4	3/8	5-3/8
GD2126	3-1/2	3-1/2 - 4	4 Sol. - 2/0 Str.	6-1/4	3/8	5-3/8
GD2129	3-1/2	3-1/2 - 4	2/0 Sol. - 250	6-1/4	3/8	5-3/8
GD2134	3-1/2	3-1/2 - 4	300 - 500	6-7/8	1/2	5-3/4
GD224C	4	4 - 4-1/2	8 Sol. - 4 Str.	6-3/8	3/8	5-7/8
GD2226	4	4 - 4-1/2	4 Sol. - 2/0 Str.	6-3/8	3/8	5-7/8
GD2229	4	4 - 4-1/2	2/0 Sol. - 250	6-3/8	3/8	5-7/8
GD2234	4	4 - 4-1/2	300 - 500	6-7/8	1/2	6-1/4

NOTE:

** Refer to Section O for tube dimensions.
Complies with NFPA 78-86 HEAVY DUTY stacks; use suffix "-LD" for lead plating for HEAVY DUTY stack applications

Blue highlighted items are industry standard and most frequently ordered.

TYPE GP

Ground Connector

For Two Copper Cables to Rod or Pipe

High copper alloy ground connector for joining a range of parallel cables perpendicular to rod, pipe or column. Also used with one groove for run, the other for tap to equipment. High copper alloy cast body and DURIUM™ U-bolts, nuts, and lockwashers make the GP suitable for direct burial in the ground or concrete. One-wrench installation. UL467 Listed. Acceptable for direct burial in earth or concrete.

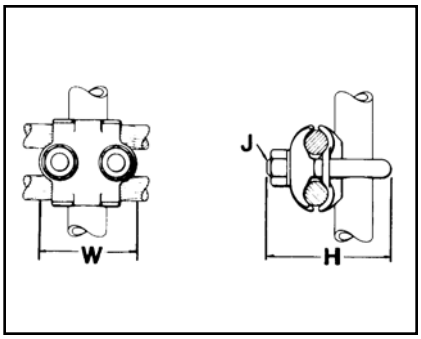

Catalog Number	Conductor			H	J	W
	Tube I.P.S. **	O.D. Size	Cable			
GP114C	1/4	1/2	8 Sol. - 4 Str.	2-1/2	3/8	1-7/8
GP1126	1/4	1/2	4 Sol. - 2/0 Str.	2-1/2	3/8	1-7/8
GP1129	1/4	1/2	2/0 Sol. - 250	2-1/2	3/8	1-7/8
GP644C	3/8	5/8 - 3/4	8 Sol. - 4 Str.	2-1/2	3/8	2-1/8
GP6426	3/8	5/8 - 3/4	4 Sol. - 2/0 Str.	2-1/2	3/8	2-1/8
GP6429	3/8	5/8 - 3/4	2/0 Sol. - 250	2-7/8	3/8	2-1/8
GP6434	3/8	5/8 - 3/4	300 - 500	3-1/2	1/2	2-5/9
GP144C	1/2-3/4	7/8 - 1	8 Sol. - 4 Str.	2-3/4	3/8	2-3/8
GP1426	1/2-3/4	7/8 - 1	4 Sol. - 2/0 Str.	3	3/8	2-3/8
GP1429	1/2-3/4	7/8 - 1	3/0 Sol. - 250	3	3/8	2-3/8
GP1434	1/2-3/4	7/8 - 1	300 - 500	3-3/4	1/2	2-5/9
GP164C	1-1/4	1-5/8	8 Sol. - 4 Str.	3-1/2	3/8	3
GP1629	1-1/4	1-5/8	2/0 Sol. - 250	3-1/2	3/8	3
GP1726	1-1/2	1-7/8	4 Sol. - 2/0 Str.	4	3/8	3-1/4
GP184C	2	2-3/8	8 Sol. - 4 Str.	4-1/8	3/8	3-11/16
GP1826	2	2-3/8	4 Sol. - 2/0 Str.	4-3/8	3/8	3-11/16
GP2026	3	3-1/2	4 Sol. - 2/0 Str.	5-1/2	3/8	4-13/16
GP2226	4	4-1/2	4 Sol. - 2/0 Str.	6-3/8	3/8	5-13/16

NOTE:

** Refer to Section O for tube dimensions.

TYPE GK

Ground Connector

For Three Copper Cables
to Rod or Pipe

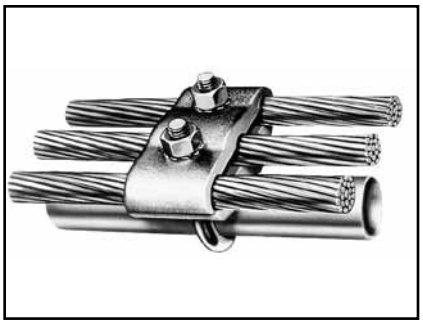

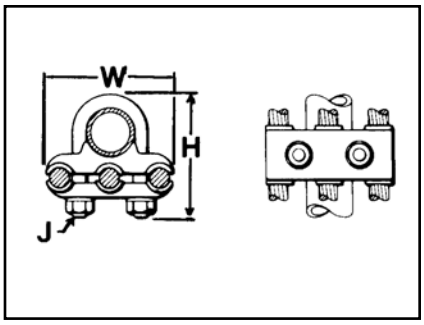

High copper alloy ground connector for joining three equal cables to rod or tube. Cable grooves take a wide range of cable. High copper alloy cast body and DURIUM™ U-bolts, nuts, and lockwashers make the GK suitable for direct burial in soil or concrete. One-wrench installation. UL467 Listed. Acceptable for direct burial in earth or concrete.

Catalog Number	Conductor			H	J	W
	Tube I.P.S. **	O.D. Size	Cable			
GK114C	1/4	1/2	8 Sol. - 4 Str.	2-1/2	3/8	2-1/2
GK1126	1/4	1/2	4 Sol. - 2/0 Str.	2-1/2	3/8	2-3/4
GK1129	1/4	1/2	2/0 Sol. - 250	2-1/2	1/2	3-3/8
GK644C	3/8	5/8 - 3/4	8 Sol. - 4 Str.	2-7/8	3/8	2-5/8
GK6426	3/8	5/8 - 3/4	4 Sol. - 2/0 Str.	2-7/8	3/8	3
GK6429	3/8	5/8 - 3/4	2/0 Sol. - 250	2-7/8	1/2	3-1/2
GK6434	3/8	5/8 - 3/4	300 - 500	3-1/2	1/2	4
GK1426	1/2 - 3/4	7/8 - 1	4 Sol. - 2/0 Str.	2-3/4	3/8	3-1/4
GK1429	1/2 - 3/4	7/8 - 1	2/0 Sol. - 250	3-3/4	1/2	3-7/8
GK1434	1/2 - 3/4	7/8 - 1	300 - 500	3-3/4	1/2	4-3/8
GK1526	1	1-1/8 - 1-1/4	4 Sol. - 2/0 Str.	3-3/8	3/8	3-1/2
GK1529	1	1-1/8 - 1-1/4	2/0 Sol. - 250	3-3/4	1/2	4-1/8
GK1626	1-1/4	1-3/8 - 1-1/2	4 Sol. - 2/0 Str.	3-1/2	3/8	3-7/8
GK1629	1-1/4	1-3/8 - 1-1/2	2/0 Sol. - 250	4-1/4	1/2	4-1/2
GK1726	1-1/2	1-5/8 - 1-7/8	4 Sol. - 2/0 Str.	4	3/8	4-1/8
GK1729	1-1/2	1-5/8 - 1-7/8	2/0 Sol. - 250	4-5/8	1/2	4-3/4
GK1826	2	2 - 2-3/8	4 Sol. - 2/0 Str.	4-1/4	3/8	4-5/8
GK1829	2	2 - 2-3/8	2/0 Sol. - 250	4-3/8	1/2	5-1/8
GK1926	2-1/2	2-1/2 - 2-7/8	4 Sol. - 2/0 Str.	5	3/8	5-1/8
GK1929	2-1/2	2-1/2 - 2-7/8	2/0 Sol. - 250	5	1/2	5-5/8

NOTE:

** Refer pages to Section-O for tube dimensions.

TYPE BDT

BONDIT® INTERSYSTEM BONDING CONNECTOR

House Mounted or
Meter Socket Mounted

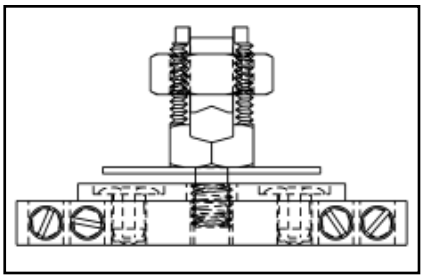

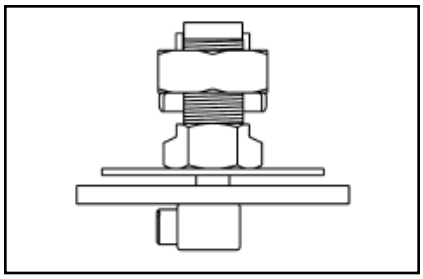

Designed to meet the requirements of NEC Article 250.94 "Bonding for Other Systems". Corrosion-resistant stainless steel set screws. Accepts main ground wire (#2-#8) and up to 4 intersystem wires (#6-#14). Same design can be mounted directly to the meter socket or mounted to the house. Innovative design does not damage meter socket and will not void warranty.

Catalog Number: **BDT1**

Features & Benefits

- Made in the USA!
- Meets Intersystem Bonding Requirements; NEC 250.94
- One connector does it all
- House mount or meter socket mount
- Incorporates proven BURNDY® SERVIT POST™ design
- Stainless steel set screws
- Accepts main ground wire (#2-#8), up to 4 intersystem wires (#6-#14)
- Easily mounts to meter box during new installation or can be wall mounted
- Easy to follow instructions included
- Does not damage meter socket; no worries about damaging the paint or voiding warranties
- Easily installed with a wrench and screwdriver
- Open design prevents buildup of hornets, bees, spiders

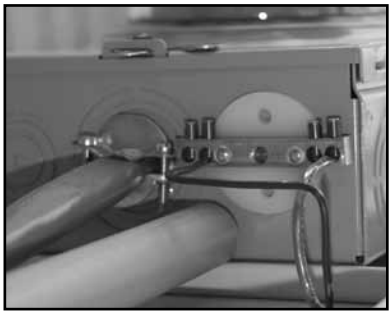

CONFIGURATION 1 - MOUNTED TO ENCLOSURE

1. Punch out a 1/2" or 3/4" knock out on the electrical enclosure.
2. Begin assembly by installing the ground electrode conductor in the SERVIT POST™ inside the electrical enclosure. Torque on SERVIT® NUT: 275 in-lb max.
3. Install the rest of the connector shown below, it is not necessary for the bus bar to be aligned parallel with the enclosure. (Note: the split washer is not used in this configuration.)
4. Tighten the intersystem ground wires with set screws in the bus bar to a maximum torque of 35 in-lb.
5. Adhere the BONDIT® location sticker to the front of the electrical enclosure.

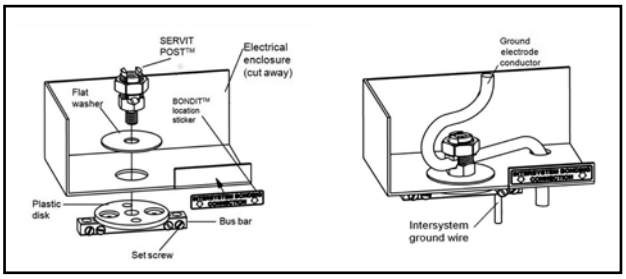

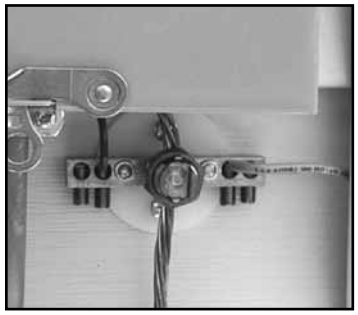

CONFIGURATION 2 - MOUNTED TO EXTERIOR WALL

1. Begin by assembling the connector as shown in figure below. Be sure SERVIT POST™ is as tight as it can be while its groove is aligned with the ground electrode conductor. (Note: the flat washer is not used in this configuration.)
2. Use two mounting screws (not included) to secure the connector to the exterior wall so that the set screws in the bus bar face downward.
3. Install the ground electrode conductor into the SERVIT POST™ while turning the nut/pressure bar assembly to a maximum torque of 275 in-lb (use 2 wrenches if necessary).
4. Tighten the intersystem ground wires with the set screws in the bus bar to a maximum torque of 35 in-lb.
5. If hidden from view, use the BONDIT® location sticker to indicate the location.

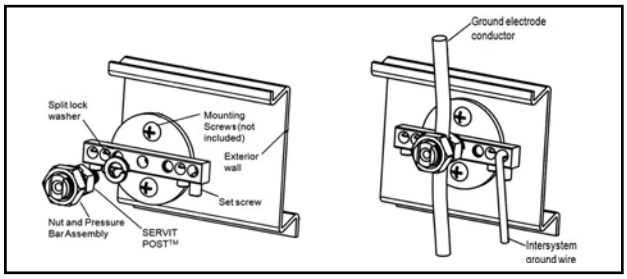

Blue highlighted items are industry standard and most frequently ordered.

BONDIT® - Wall Mounted

Intersystem Bonding Connector

NEC 250.94 refers to a requirement in the 2008 National Electrical Code. In the past, gorund wires from telephone systems or cable systems were allowed to be grounded separately from the GEC (Ground Electrode Conductor from the main electrical service). With the new code, all ground wires from separate systems such as telephone systems, CATV and radio systems must be tied together at one location to the GEC. Henc, the term intersystem refers to tying all of the "system" grounds together in one location. The BONDIT®-Wall Mount is a great solution when the GEC is exposed (not in conduit).

With the new BONDIT® - Wall Mount con-nector BURNDY provides an economical solution that meets the needs of NEC 250.94.

Catalog Number: **BDTIBB**

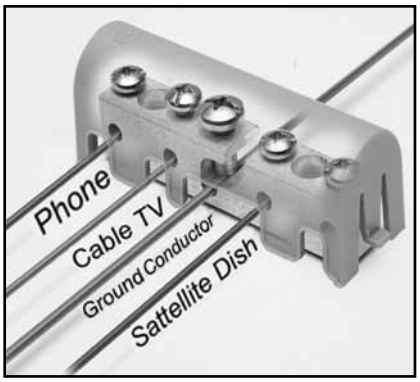

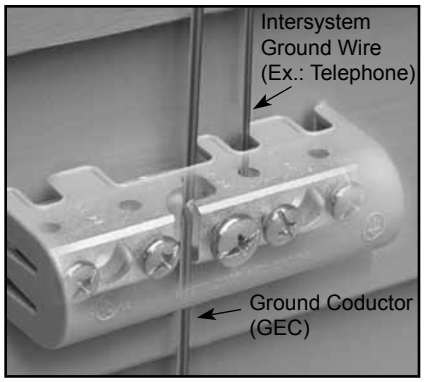

Features & Benefits

- Meets the Intersystem Bonding requirements of NEC2008 250.94
- Provides an easy to access grounding point for utilities such as telecom and cable
- Easy to install
- UL Listed and CSA Certified
- Tin-plated connector body provides long-lasting corrosion resistance
- Stainless steel set screws
- Accepts main ground wire (#2 to #6), up to (4) intersystem wires (#4 to #14)
- Supplied with durable cover, easily secured over connector body
- Approved for use with solid or stranded conductors

Catalog Number	Conductor Range		Reference Dimensions			
	Lay-In Section	Conductor Ports	L	W	H	M
BDTIBB	#6 - #2 AWG	#14 - #4 AWG	3.99 [101]	0.71 [18]	0.91 [23]	2.46 [62]

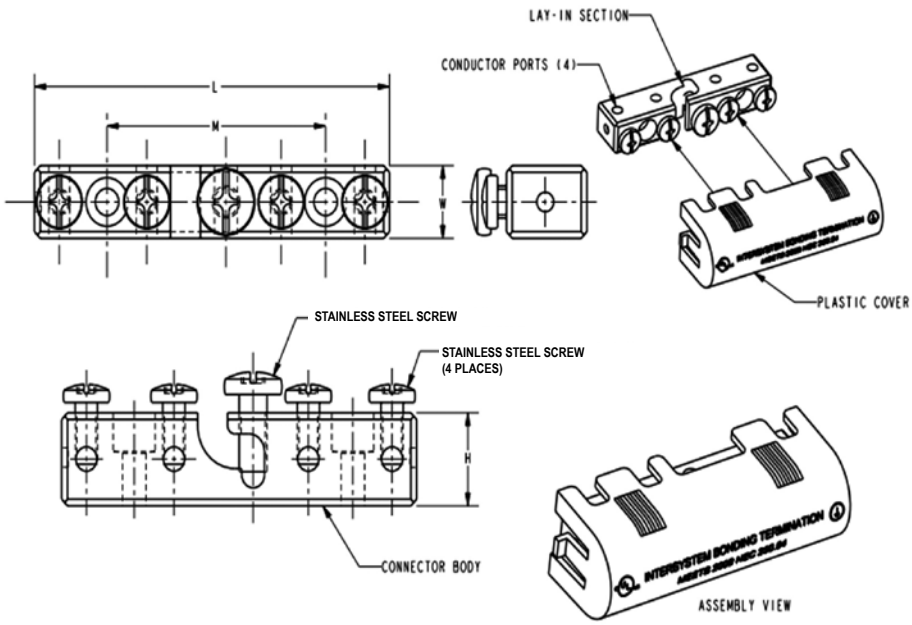

Blue highlighted items are industry standard and most frequently ordered.

CAST BRONZE CLAMPS FOR CONDUIT

Pressure bar type conduit hub adjusts for 1/2", 3/4" EMT or 1/2" rigid conduit. Hub swings 360° for easy alignment. Zinc plated hardware.

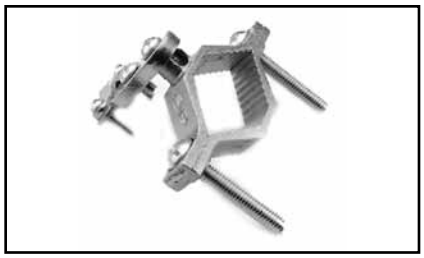

Catalog Number	Accommodates Conductor Range			Reference Dimensions			Recommended Screw Torque (Inch Pounds)	
	Water Pipe	Ground	Hub Size	H	L	W	Pipe Clamp	Wire Clamp
C-11JPT	1/2 - 1 [13 - 25]	10 - 6 Sol.	1/2 [13]	2.07 in [53]	3.19 [81]	2.70 in [69]	50 in.-lb.	50 in.-lb.
C-22JPT	1-1/4 - 2 [32 - 51]	10 - 6 Sol.	1/2 [13]	2.70 in [69]	3.83 [97]	2.70 in [69]	50 in.-lb.	50 in.-lb.
C-4JPT	2-1/2 - 4 [64 - 102]	10 - 6 Sol.	1/2 [13]	4.39 in [112]	5.15 [131]	2.70 in [69]	50 in.-lb.	50 in.-lb.

CAST BRONZE GROUND CLAMPS

For connecting grounding conductor to water pipe or copper tube. "D" indicates UL467 Listed for direct burial in earth and concrete and are supplied with silicon bronze hardware. "B" indicates brass hardware.

Catalog Number	Accommodates Conductor Range			Reference Dimensions				Recommended Screw Torque (Inch Pounds)	
	Water Pipe	Rebar	Ground	H	L	W	C	Pipe Clamp	Wire Clamp
C-11N	1/2 - 1 [13 - 25]	—	10 - 2 Str.	1.81 in [46]	2.25 [56]	0.63 in [16]	0.63 in [16]	50 in.-lb.	50 in.-lb.
C-11D	1/2 - 1 [13 - 25]	#4 - #8	10 - 2 Str.	1.81 in [46]	2.25 [56]	0.63 in [16]	0.63 in [16]	50 in.-lb.	50 in.-lb.
C-11B	1/2 - 1 [13 - 25]	—	10 - 2 Str.	1.81 in [46]	2.25 [56]	0.63 in [16]	0.63 in [16]	50 in.-lb.	50 in.-lb.
C-22*	1-1/4 - 2 [32 - 51]	—	10 - 2 Str.	2.38 in [60]	3.63 [92]	0.75 in [0.19]	1.00 in [25]	50 in.-lb.	50 in.-lb.
C-22D	1-1/4 - 2 [32 - 51]	—	10 - 2 Str.	2.38 in [60]	3.63 [92]	0.75 in [0.19]	1.00 in [25]	50 in.-lb.	50 in.-lb.
C-4*	2-1/2 - 4 [46 - 114]	—	10 - 2 Str.	4.13 in [105]	6.25 [159]	0.96 in [24]	1.88 in [48]	50 in.-lb.	50 in.-lb.
C-8*	4-1/2 - 6 [114 - 165]	—	10 - 2 Str.	4.29 in [109]	8.34 [212]	1.25 in [32]	1.88 in [48]	50 in.-lb.	50 in.-lb.

* Supplied with zinc-plated steel hardware.

BUDGET PRICE CAST BRONZE GROUND CLAMP

C5 similar to C11, but lighter duty.

Catalog Number	Accommodates Conductor Range		Reference Dimensions			Recommended Screw Torque (Inch Pounds)	
	Water Pipe	Ground	H	L	W	Pipe Clamp	Wire Clamp
C-5	1/2 - 1 [13 -25]	10 - 2 Str.	1.56 in [40]	2.25 [56]	0.56 in [14]	50 in.-lb.	50 in.-lb.

Blue highlighted items are industry standard and most frequently ordered.

Cast Bronze Ground Clamps

With Lay-in Feature

For connecting grounding conductor to water pipe, copper tube, ground rod or rebar. The open face design allows for fast lay-in of the tap conductor without the need for cutting. Simply reverse bottom clamp for smaller size rebar or rod. Connectors are provided with Silicon Bronze hardware.

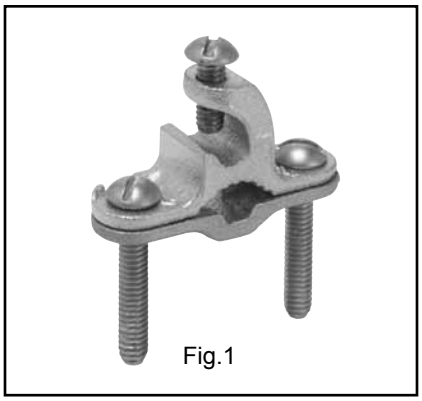
Fig.1

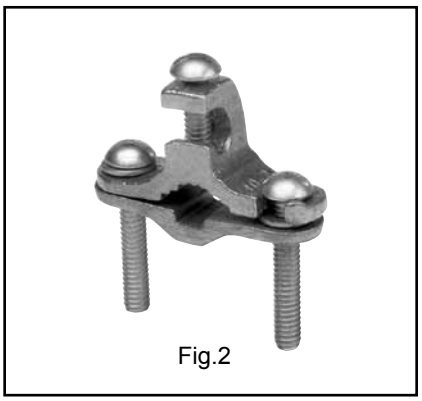
Fig.2

Catalog Number	Fig. #	Accommodates Conductor Range				Reference Dimensions			Recommended Screw Torque (Inch Pounds)
		Main			Tap				
		Water Pipe	Rebar	Ground Rod	Ground	H	L	W	
C11K16D	1	1/2" - 1" [13-25]	#4 - #6	3/8" - 1"	#10 - #2 Str.	1.64	2.28	0.66	50 in.-lbs.
C11K17D	2	1/2" - 1" [13-25]	#4 - #6	3/8" - 1"	#10 - #2 Str.	1.64	2.28	0.66	50 in.-lbs.

DIE CAST CLAMPS

Die cast zinc with zinc plated screws.

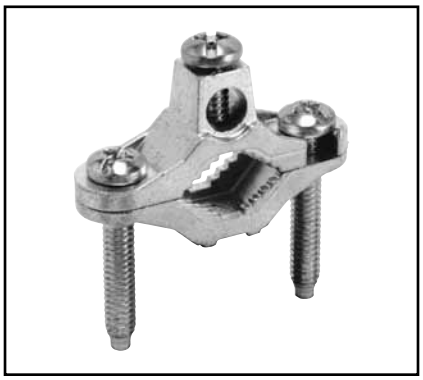

Catalog Number	Accommodates Conductor Range		Reference Dimensions				Recommended Screw Torque (Inch Pounds)	
	Water Pipe	Ground	H	L	W	C	Pipe Clamp	Wire Clamp
CZ-11	1/2" - 1" [13-25]	10 - 2 Str.	1.56" [40]	2.25" [56]	0.56" [14]	0.50" [13]	50 in.-lb.	50 in.-lb.

CAST BRONZE CLAMPS

To connect armored cable to water pipe. Zinc plated screws. Pressure bar grips armor or outer cable insulation. 360° swing hub for easy alignment.

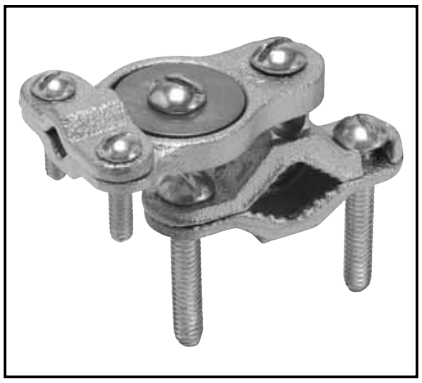

Catalog Number	Accommodates Conductor Range		Reference Dimensions			Recommended Torque	
	Water Pipe	Armored Conductor	H	L	W	Pipe Clamp	Wire Clamp
C-11JA	1/2 - 1 [13-25]	10 - 6 Sol.	1.38" [35]	3.05" [77]	1.41" [36]	50 in.-lb.	50 in.-lb.
C-22JA	1-1/4 - 2 [32-51]	10 - 6 Sol.	2.60" [66]	3.69" [94]	1.41" [36]	50 in.-lb.	50 in.-lb.
C-4JA	2-1/2 - 4 [64-102]	10 - 6 Sol.	4.29" [109]	5.01" [128]	1.41" [36]	50 in.-lb.	50 in.-lb.

CAST BRONZE GROUND CLAMPS

For connecting grounding conductor, EMT or rigid conduit to water pipe, copper tube, ground rod or rebar. Hub swings 360° for easy alignment. Simply reverse bottom clamp for smaller size rebar or rod. Connectors are provided with Silicon Bronze hardware.

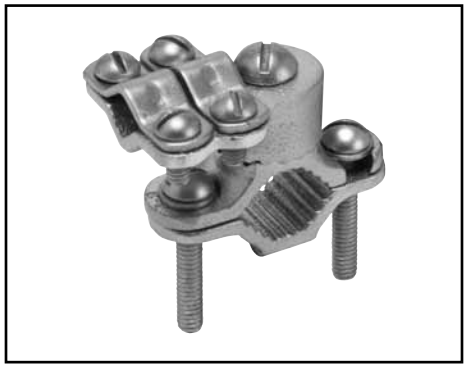

Catalog Number	Accommodates Conductor Range				Reference Dimensions			Recommended Screw Torque (Inch Pounds)
	Main			Tap				
	Water Pipe	Rebar	Ground Rod	Ground	H	L	W	
C11HD4/0DB	1/2" - 1" [13-25]	#4 - #6	3/8" - 1"	#8 - 4/0 AWG	2.25	2.65	1.56	50 in.-lbs.
C22HD4/0DB	1-1/4" - 2" [32-51]	—	—	#8 - 4/0 AWG	2.70	3.60	1.56	50 in.-lbs.

Blue highlighted items are industry standard and most frequently ordered.

CAST BRONZE CLAMPS

GROUND CLAMP

For connecting armored cable to water pipe. Zinc plated screws. "D" indicates UL467 for direct burial in earth and concrete, supplied with silicon bronze hardware.

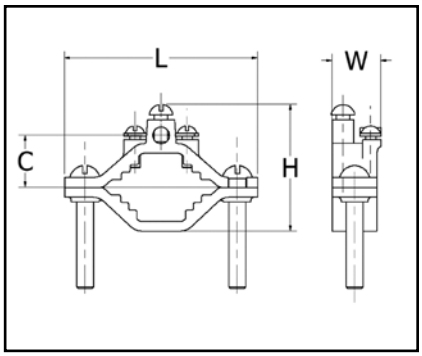

Catalog Number	Accommodates Conductor Range			Reference Dimensions				Recommended Screw Torque (Inch Pounds)	
	Water Pipe	Ground	Ground Clamp	H	L	W	C	Pipe Clamp	Wire Clamp
C-6	1/2 - 1 [13-25]	10 - 2 Str.	Bare Armored Unarmored Wire Cables or Cords	1.60" [41]	2.34" [59]	1.06" [27]	0.63" [16]	50 in.-lb.	50 in.-lb.
C-6D	1/2 - 1 [13-25]	10 - 2 Str.		1.60" [41]	2.34" [59]	1.06" [27]	0.63" [16]	50 in.-lb.	50 in.-lb.
C-7	1-1/4 - 2 [32-51]	10 - 2 Str.		2.38" [60]	3.62" [92]	0.94" [24]	1.00" [25]	50 in.-lb.	50 in.-lb.

CAST BRONZE CLAMP FOR RIGID CONDUIT

For grounding rigid conduit systems. Zinc plated screws.

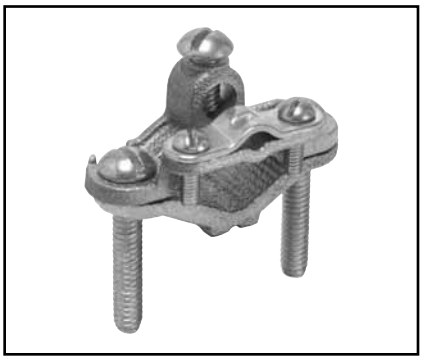

Catalog Number	Accommodates Conductor Range			Reference Dimensions				Recommended Screw Torque (Inch Pounds)	
	Water Pipe	Ground	Hub Size	H	L	W	C	Pipe Clamp	Wire Clamp
C-61	1/2 - 1 [13-25]	#6 Sol. Max.	1/2 [13]	2.07" [53]	2.34" [59]	1.34" [34]	1.06" [27]	50 in.-lb.	50 in.-lb.
C-66	1-1/4 - 2 [32-51]	#6 Sol. Max.	1/2 [13]	2.69" [68]	3.62" [92]	1.34" [34]	1.40" [36]	50 in.-lb.	50 in.-lb.

Blue highlighted items are industry standard and most frequently ordered.

CAST BRONZE CLAMPS FOR CONDUIT

For grounding rigid conduit systems. Continuity from rigid conduit systems to ground provided by cast bronze threaded conduit hub. Zinc plated screws.

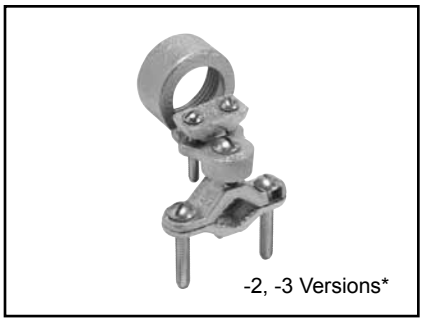

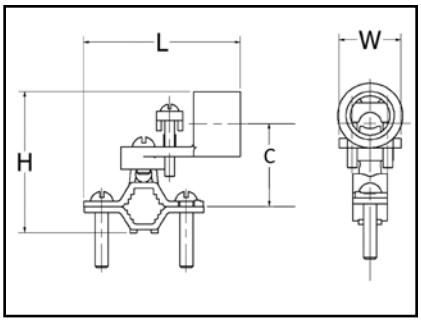

Catalog Number	Accommodates Conductor Range			Reference Dimensions				Recommended Screw Torque (Inch Pounds)	
	Water Pipe	Ground	Hub Size	H	L	W	C	Pipe Clamp	Wire Clamp
C-11LH-1	1/2 - 1 [13-25]	10 Str. - 6 Sol.	1/2 [13]	2.25" [57]	3.23" [83]	0.69" [18]	0.97" [25]	50 in.-lb.	50 in.-lb.
C-22LH-1	1-1/4 - 2 [32-51]	10 Str. - 6 Sol.	1/2 [13]	2.88" [73]	3.50" [89]	0.69" [18]	1.34" [34]	50 in.-lb.	50 in.-lb.
C-4LH-1	2-1/2 - 4 [54-102]	10 Str. - 6 Sol.	1/2 [13]	4.56" [116]	4.82" [122]	0.69" [18]	2.44" [62]	50 in.-lb.	50 in.-lb.
C-11LH-2	1/2 - 1 [13-25]	2/0 - 10 Str.	3/4 [19]	2.56" [65]	2.86" [73]	1.00" [25]	1.13" [29]	50 in.-lb.	50 in.-lb.
C-22LH-2	1-1/4 - 2 [32-51]	2/0 - 10 Str.	3/4 [19]	3.19" [65]	3.50" [89]	1.00" [25]	1.50" [38]	50 in.-lb.	50 in.-lb.
C-4LH-2	2-1/2 - 4 [64-102]	2/0 - 10 Str.	3/4 [19]	4.88" [124]	4.82" [122]	1.00" [25]	2.38" [60]	50 in.-lb.	50 in.-lb.
C-11LH-3	1/2 - 1 [13-25]	3/0 - 10 Str.	1 [25]	2.69" [68]	2.86" [73]	1.13" [29]	1.19" [30]	50 in.-lb.	50 in.-lb.
C-22LH-3	1-1/4 - 2 [32-51]	3/0 - 10 Str.	1 [25]	3.32" [59]	3.50" [89]	1.13" [29]	1.56" [40]	50 in.-lb.	50 in.-lb.
C-4LH-3	2-1/2 - 4 [64-102]	3/0 - 10 Str.	1 [25]	5.01" [127]	4.82" [122]	1.13" [29]	2.44" [62]	50 in.-lb.	50 in.-lb.

* C-LH with -1 has one screw; -2 and -3 Versions have 2 screws as shown.

CAST BRONZE CLAMP WITH COPPER STRAP

For grounding rigid conduit systems. Strap helps protect conduit system from water system vibrations. Zinc plated screws. Strap ETP copper.

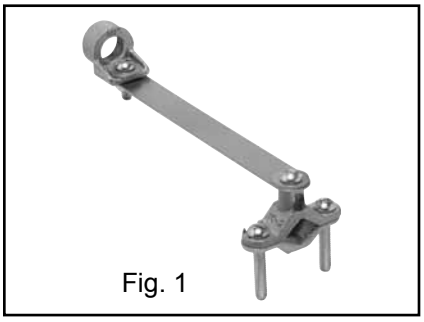

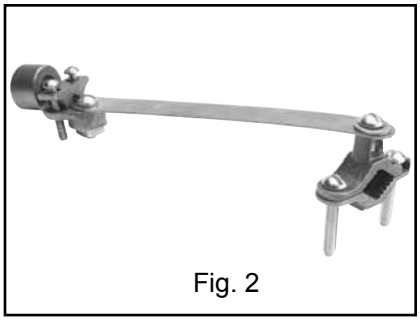

Catalog Number	Fig. #	Accommodates Conductor Range			Reference Dimensions					Recommended Screw Torque (Inch Pounds)	
		Water Pipe	Ground	Hub Size	H	L	W	C	D	Pipe Clamp	Wire Clamp
C-11CSH-1	1	1/2 -1 [13-25]	6 Sol. Max.	1/2 [13]	1.75" [44]	8.50" [216]	1.06" [27]	1.06" [27]	6.12" [155]	50 in.-lb.	50 in.-lb.
C-11CSH-2	1	1/2 -1 [13-25]	4/0 Str. Max.	3/4 [19]	1.75" [44]	8.50" [216]	1.25" [32]	1.50" [38]	6.12" [155]	50 in.-lb.	50 in.-lb.
C-11CSH-3	1	1/2 -1 [13-25]	4/0 Str. Max.	1 [25]	1.75" [44]	8.50" [216]	1.50" [38]	1.75" [44]	6.12" [155]	50 in.-lb.	50 in.-lb.
C11CSLH12	2	1/2 -1 [13-25]	2/0 Str. Max.	1/2 [13]	1.75" [44]	8.50" [216]	1.18" [30]	1.06" [27]	6.12" [155]	50 in.-lb.	45 in.-lb.

Blue highlighted items are industry standard and most frequently ordered.

TYPE GC-A

Dual Rated Ground Clamp

For Copper and Aluminum Cable

GC-A ground clamps are UL Listed for use with either copper or aluminum conductors to copper water pipe, galvanized pipe or steel conduit. All clamps are constructed from tin plated high-strength extruded aluminum alloy. PENETROX™ oxide inhibiting joint compounds are recommended for all aluminum applications.

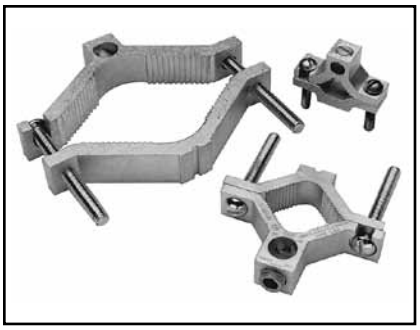

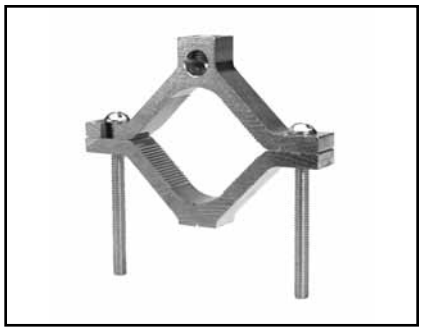

Features & Benefits

- Clamps are dual rated for both copper and aluminum conductors
  - ◊ Maximum flexibility of application
- All connectors are tin plated
  - ◊ Provide low contact resistance and prevents galvanic corrosion
- All clamps are range taking
  - ◊ Only 3 catalog numbers covers complete range of applications from 1/2 - 4 inches

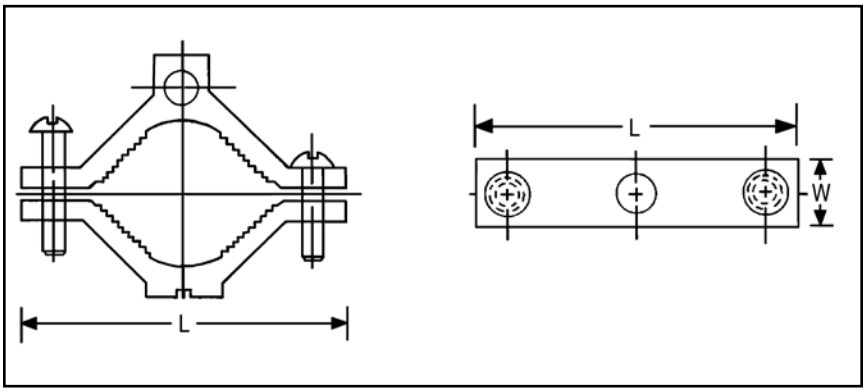

Catalog Number	Conduit, Pipe, or Water Tube Size**	Wire Range	Screw Type	W	L	Hex Size
GC15A	1/2 - 3/4 - 1	1/0 - 14	Slotted	11/16	2-1/4	Slot
GC18A	1-1/4 - 1-1/2 - 2	250 kcmil - 6	Hex Socket	13/16	3-3/4	5/16
GC22A	2-1/2 - 3 - 3-1/2 - 4	250 kcmil - 6	Hex Socket	1	6-5/16	5/16

NOTE:

** Refer to Section O for tube dimensions.

TYPE GG

GROUND CONNECTOR

For Copper Bar, Strap, Braid or Cable to Rod or Tube

High copper alloy ground connector for joining bar, strap, braid or cable to rod or tube. High copper alloy cast body, DURIUM™ U-bolts, nuts and lockwashers make the GG particularly effective for use with braid for ground rods, switch handles, fence posts and gates. One-wrench installation.

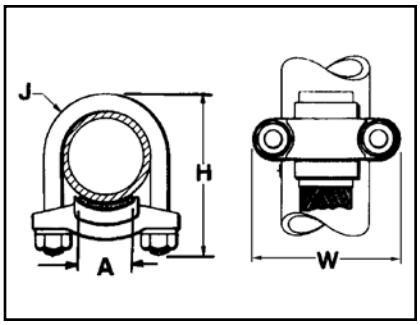

Catalog Number	Conductor		A	H	J	W
	Tube I.P.S. **	Rod				
GG15-1	1	1-1/8 - 1-1/4	1	3-3/8	3/8	2-5/8
GG16-1	1-1/4	1-3/8 - 1-1/2		3-1/2		3
GG17-1	1-1/2	1-5/8 - 1-7/8				3-1/4
GG17-15			1-1/2			
GG18-1	2	2 - 2-3/8	1	4-1/4		3-3/4
GG18-15			1-1/2			
GG18-2			2	4-3/8	1/2	4-1/8
GG19-2	2-1/2	2-1/2 - 2-7/8		5		4-5/8
GG19-25			2-1/2			
GG20-2	3	3 - 3-1/2	2	6-3/8		5-1/5
GG20-25			2-1/2			5-1/4
GG20-3			3			
GG21-2	3-1/2	3-1/2 - 4	2	5-7/8		5-3/4
GG21-25			2-1/2			
GG21-3			3			
GG21-35			3-1/2			
GG22-2	4	4 - 4-1/2	2	6-1/2		6-1/4
GG22-25			2-1/2			
GG22-3			3			
GG22-4			4			
GG24-2	5	—	2	7-5/8		7-1/4

NOTE:

** Refer to Section O for tube dimensions.

TYPE GQ

Ground Connector

For Copper Cable to Tube

High copper alloy ground connector for cross connecting a wide range of cable. High copper alloy, cast body, DURIUM™ U-bolts, nuts, and lockwashers make the GQ suitable for burial in soil or concrete. One-wrench installation. UL467 Listed. Acceptable for direct burial in earth or concrete.

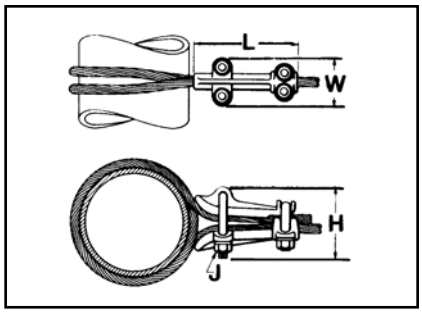

Catalog Number	Conductor		H	J	L	W
	I.P.S.	Cable				
GQ2626	6" Max.	4 Str. - 2/0 Str.	4-1/2	1/2	5	2-1/2
GQ26-1	Above 6"	4 Str. - 2/0 Str.	7-1/8	1/2	5	2-1/2
GQ2929	6" Max.	2/0 Str. - 250	4-1/8	1/2	6	2-3/4
GQ29-1	Above 6"	2/0 Str. - 250	7-1/2	1/2	6	2-3/4

TYPE GX

Ground Connector

For Copper Cables

High copper alloy ground connector for cross connecting a wide range of cable. The high copper alloy cast body, DURIUM™ U-bolts, nuts, and lockwashers make the GX suitable for burial in soil or concrete. One-wrench installation. UL467 Listed. Acceptable for direct burial in earth or concrete.

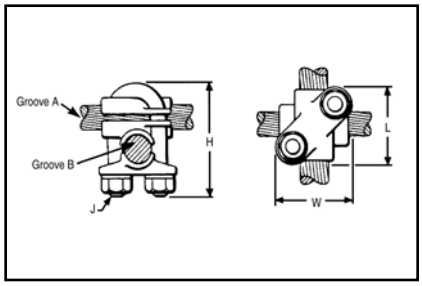

Catalog Number	Conductor		H	J	L	W
	Groove A	Groove B				
GX4C4C	8 Sol. - 4 Str.	8 Sol. - 4 Str.	1-7/8	3/8	1-5/8	1-5/8
GX264C	4 Sol. - 2/0 Str.	8 Sol. - 4 Str.	2-1/2	3/8	1-3/4	1-2/3
GX2626	4 Sol. - 2/0 Str.	4 Sol. - 2/0 Str.	2-1/2	3/8	1-3/4	1-2/3
GX294C	2/0 Sol. - 250	8 Sol. - 4 Str.	2-3/4	3/8	1-7/8	1-7/8
GX2926	2/0 Sol. - 250	4 Sol. - 2/0 Str.	2-1/2	3/8	1-7/8	1-7/8
GX2929	2/0 Sol. - 250	2/0 Sol. - 250	2-3/4	3/8	1-7/8	1-7/8
GX344C	300 - 500	8 Sol. - 4 Str.	2-3/4	3/8	2-1/8	1-7/8
GX3426	300 - 500	4 Sol. - 2/0 Str.	2-3/4	3/8	2-1/8	1-7/8
GX3429	300 - 500	2/0 Sol. - 250	2-3/4	3/8	2-1/8	1-7/8
GX3434	300 - 500	300 - 500	4-1/4	1/2	2-5/8	2-5/8

Blue highlighted items are industry standard and most frequently ordered.

TYPE GRC

High Strength Ground Rod Clamp

For Copper Cable to Rod

High copper alloy ground connector for joining a range of cable to copper clad, galvanized steel, and stainless steel ground rods. Slips over end of rod, one-wrench installation. UL467 Listed for direct burial in earth and concrete.

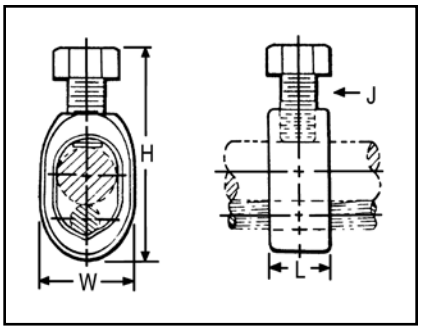

Catalog Number	Drive Rod	Conductor Range		H	W	L	J
		Min.	Max.				
GRC12	1/2	10 Sol.	2 Str.	2.00	0.89	0.63	3/8
GRC58	5/8	10 Sol.	1 Str.	2.19	0.95	0.63	3/8
GRC34	3/4	8 Sol.	1/0 Str.	2.47	1.09	0.65	3/8

TYPE GCRT1/0 GROUND CONNECTORS

Ground Clamp Range Taking, up to 1/0

The GCRT1/0 is a range taking ground rod clamp offering another choice from the BURNDY® family of connectors. The GCRT1/0 works on 1/2", 5/8" and 3/4" ground rods with a wire range of #8 through 1/0! The clamp is UL467 Listed for direct burial in earth and concrete. Catalog number **GCRT1/0**.

Features & Benefits

- Range taking design helps reduce inventory
- UL Listed and CSA Certified
- UL467 Listed for direct burial in earth and concrete

TYPE GRL

Light Duty Economical Ground Rod Clamp

UL 467 Listed. Acceptable for direct burial in earth and concrete.

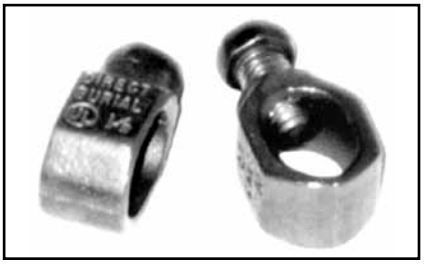

Catalog Number	Rod Size	Conductor Range	
		Minimum	Maximum
GRL3	3/8 in	10 AWG	4 AWG
GRL4	1/2 in	10 AWG	2 AWG
GRL5	5/8 in	10 AWG	2 AWG
GRL6	3/4 in	10 AWG	2 AWG

Blue highlighted items are industry standard and most frequently ordered.

FLEXIBLE COPPER BRAID JUMPER

Copper braid is made of tinned, pure copper wire woven and flattened into a rectangular shape for greater flexibility. Seamless, pure copper ferrules are formed and assembled on each end to provide appropriate contact surfaces.

Braid is used extensively to compensate for expansion and contraction of moving parts and for thermal movement of rigid devices; to prevent breakage of insulators or bushings or equipment because of misalignment during settling of substation foundations; to absorb shock and vibration of operating equipment; and to provide flexible current carrying leads between moving parts of heavy machinery or equipment.

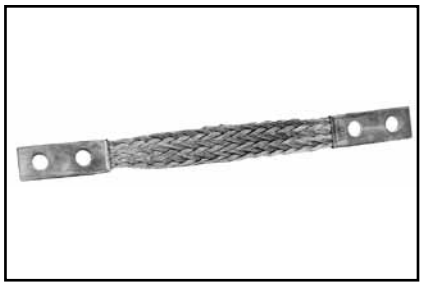

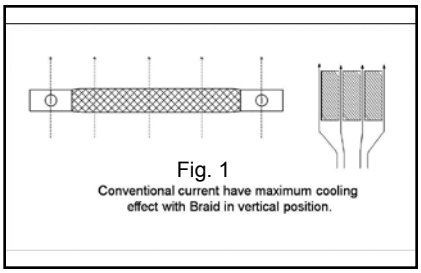

Fig. 1
Conventional current have maximum cooling effect with Braid in vertical position.

BULK BRAID

Bulk braid can be ordered with a minimum order quantity of 10 feet. Specify feet in number of inches.

Example: 10 feet of 190 ampere braid is Catalog No. BB077L120.

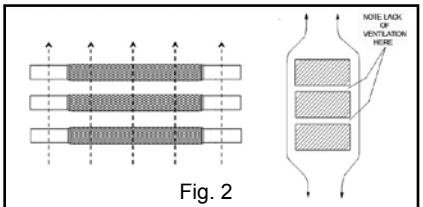

Fig. 2
Ventilation less efficient with Braid in horizontal position

INDOOR RATING AMPS	EQUIV CIRCULAR AREA	CAT NO.	APPROX WEIGHT PER FT
75	24,000	**BB024L**	0.06
95	48,000	**BB048L**	0.16
110	67,000	**BB067L**	0.22
190	77,184	**BB077L**	0.24
340	153,700	**BB154L**	0.49
360	231,552	**BB226L**	0.76
415	300,000	**BB300L**	1.06

CURRENT CARRYING CAPACITY

Flexible copper braid has generally better heat dissipation properties than flat bar, cable or other conductors, and therefore can be expected to have a greater current carerying capacity for given cross-sectional area. This is due to its greater surface area resulting from the woven construction of fine strands. However, ventilation, due to the vertical convection current of air, is appreciably better when the long axis of the braid is vertical rather than horizontal, so that the long sides of the braid, rather than the edges, are exposed to the moving air. This is particularly true when spaced braids are used in multiple as can be seen by comparing Figure 1 and 2.

To take full advantage of ventilation, the cooling convection current of air should be permitted to flow freely between the braids. Therefore, if possible, the braids should be spaced apart, rather than bunched together, as illustrated in Figure 3. The effectiveness of spacing is, of course, greater when the braids are in a vertical position.

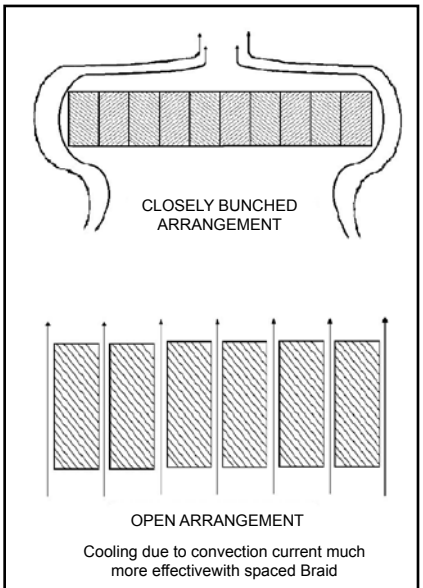

Cooling due to convection current much more effectivewith spaced Braid

Fig. 3

FLEXIBLE COPPER BRAID

CUSTOM DESIGNS

Flexible copper braid offers an economical and efficient means of protecting electrical equipment from the potentially harmful effects of shock and vibration, terminal expansion, movement of components and misalignment that may occur during the service life of the equipment.

Many varieties of braid are required to meet those needs which we can build to your specifications.

We also offer engineering assistance in the selection of the most appropriate standard or custom braid configuration for your application.

CUSTOM VARIATIONS

Drilling

* Undrilled
* Elongated (slotted) holes
* Special hole patterns and location
* Metric
* NEMA

Plating

* Tin
* Silver
* Nickel
* Unplated

Length

* Jumper (overall)
* Ferrule(s) contact

Insulated (covered)

* Tubular
* Heat shrink

Split Braid Assemblies

* Stacked
* Side-by-side

Multiple Ferrules

Preformed Configurations

* Offset contact surfaces
* Angular (e.g. 90°, 180°) bends
* Ferrule contact surfaces rotated 90° on braid axis

Combined Braid Assemblies

Combined connector - Braid Assemblies

Ferrule Variations

* Belled/unbelled
* Width/thickness
* Contact length
* Special shaping
* Bent at angle°

High Ampacity Requirements

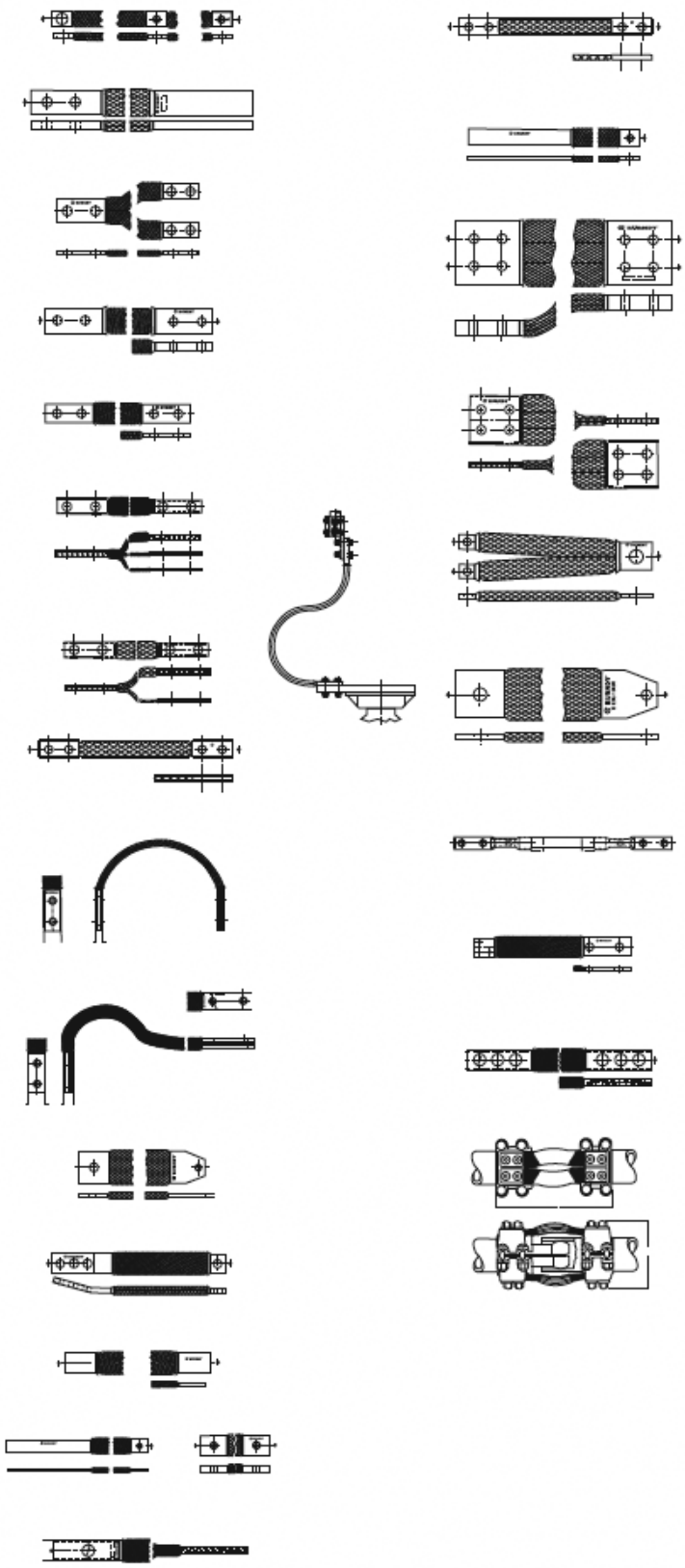

Blue highlighted items are industry standard and most frequently ordered.

TYPE B

Flexible Copper Braid
Bonding Jumpers
Bonding Straps

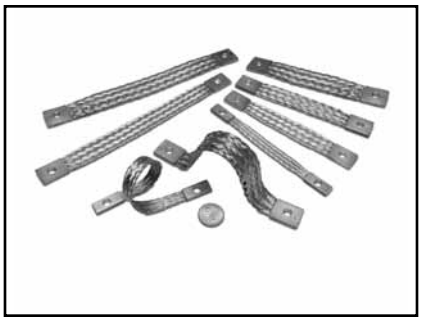

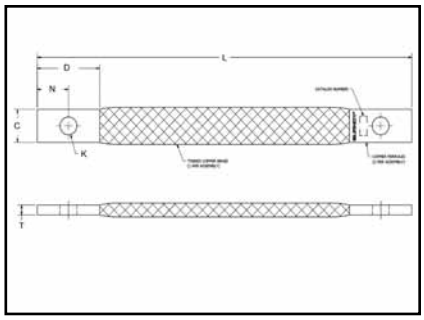

Flexible copper braid jumpers designed to take up linear expansion and contraction, compensate for misalignment and absorb vibratory movement of electrical equipment and devices. Made of flat extra flexible, tinned, pure copper braid, with unplated, seamless, pure copper ferrules formed into a rectangular shape on each end. Shown are standard 6 & 9 inch flexible copper braids; other lengths, plating and mounting hole sizes are available; contact BURNDY for more information.

Catalog Number	Number of Braids in Ferrules	AWG Equivalent	C	D	K**	L	N	T	Approximate Ampere Rating	
									Indoor	Outdoor
BB024L6T14*	1	#6	0.50	1	0.27	6	0.50	0.15	75	100
BB024L9T14*	1	#6	0.50	1	0.27	9	0.50	0.15	75	100
BB048L6T14*	1	#4	0.75	1	0.27	6	0.50	0.13	95	150
BB048L9T14*	1	#4	0.75	1	0.27	9	0.50	0.13	95	150
BB067L6T14	1	#2	0.83	1	0.27	6	0.50	0.17	110	180
BB067L9T14	1	#2	0.83	1	0.27	9	0.50	0.17	110	180
BD6T14	1	#1	0.94	1	0.27	6	0.50	0.13	190	225
BD9T14	1	#1	0.94	1	0.27	9	0.50	0.13	190	225

* Not UL Listed or CSA Certified
** K mounting hole .27″ accommodates 1/4″ hardware.

TYPE B

Flexible Copper Braid

Flexible copper braid jumpers designed to take up linear expansion and contraction, compensate for misalignment and absorb vibratory movement of electrical equipment and devices.

Made of flat extra flexible, tinned, pure copper braid, with unplated, seamless, pure copper ferrules formed into a rectangular shape on each end.

Last two numbers in catalog number indicate total length of braid in inches (e.g., BD12N or BD12 is 12" long braid jumper).

Other lengths, plating and drilling are available. Contact the factory.

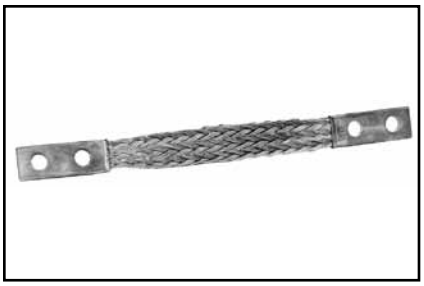

Catalog # Prefix	Equiv. AWG Size
BD	#1
BE	3/0
BF	4/0
BG	300 kcmil

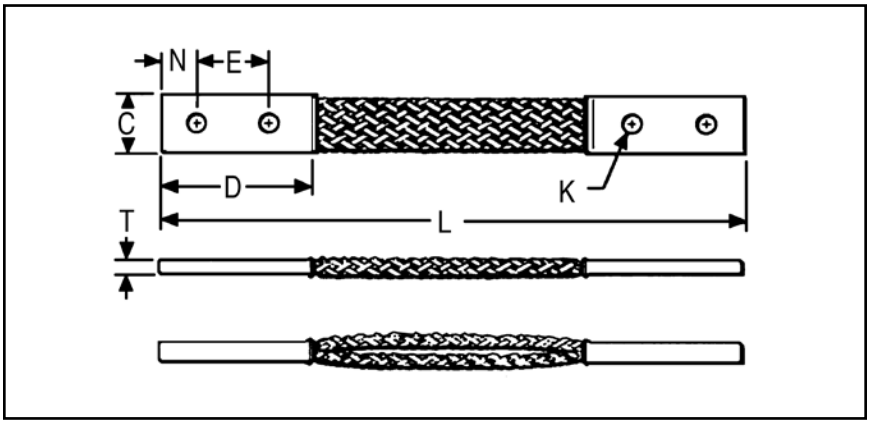

Catalog Number	Number of Braids in Ferrules	C	D	E	K	L	N	T	Approximate Ampere Rating	
									Indoor	Outdoor
BD12 ②	1	0.94	2.50	1.25	0.44	12	0.62	0.13	190	225
BD12N ②	1	0.94	3.00	1.75	0.56	12	0.62	0.13	190	225
BD18 ②	1	0.94	2.50	1.25	0.44	18	0.62	0.13	190	225
BD18N ②	1	0.94	3.00	1.75	0.56	18	0.62	0.13	190	225
BD24 ②	1	0.94	2.50	1.25	0.44	24	0.62	0.13	190	225
BD24N ②	1	0.94	3.00	1.75	0.56	24	0.62	0.13	190	225
BE12 ②	1	1.50	3.00	1.50	0.44	12	0.75	0.17	340	405
BE12N ②	1	1.50	3.00	1.75	0.56	12	0.62	0.17	340	405
BE18 ②	1	1.50	3.00	1.50	0.44	18	0.75	0.17	340	405
BE18N ②	1	1.50	3.00	1.75	0.56	18	0.62	0.17	340	405
BE24 ②	1	1.50	3.00	1.50	0.44	24	0.75	0.25	340	405
BE24N ②	1	1.50	3.00	1.75	0.56	24	0.62	0.17	340	405
BF12 ②	1	1.19	3.00	1.50	0.44	12	0.75	0.25	360	430
BF12N ②	1	1.19	3.00	1.75	0.55	12	0.62	0.25	360	430
BF18 ②	1	1.19	3.00	1.50	0.44	18	0.75	0.25	360	430
BF18N ②	1	1.19	3.00	1.50	0.44	18	0.75	0.25	360	430
BF24 ②	1	1.19	3.00	1.50	0.44	24	0.75	0.25	360	430
BF24N ②	1	1.19	3.00	1.75	0.56	24	0.62	0.25	360	430
BG12	1	1.50	3.00	1.50	0.44	12	0.75	0.25	415	495
BG12N ①	1	1.50	3.00	1.75	0.56	12	0.62	0.25	415	495
BG18	1	1.50	3.00	1.50	0.44	18	0.75	0.25	415	495
BG18N ①	1	1.50	3.00	1.75	0.56	18	0.62	0.25	415	495
BG24	1	1.50	3.00	1.50	0.44	24	0.75	0.25	415	495
BG24N ①	1	1.50	3.00	1.75	0.56	24	0.62	0.25	415	495

① Tongue drilled per (2) hole NEMA Standard
② Certified to CSA C22.2, No. 41 Grounding and Bonding Equipment Standards in addition to the UL467 Listing which all items above are Listed to.

NOTE: Equivalent sizes may be designated by suffix letters representing variations in length, mounting configurations, pad size and finish. Contact factory for details.
For Tin plated ferrules add suffix -TN to the catalog number.

Blue highlighted items are industry standard and most frequently ordered.

TYPE B

Flexible Copper Braid (Continued)

Catalog Number	Number of Braids in Ferrules	C	D	E	K	L	N	T	Approximate Ampere Rating	
									Indoor	Outdoor
B2D12 ②	2	0.94	2.5	1.25	0.44	12	0.62	0.25	380	455
B2D12N ②	2	0.94	3.00	1.75	0.56	12	0.62	0.25	380	455
B2E12	2	1.62	3.00	1.50	0.44	12	0.75	0.25	530	635
B2E12N ①	2	1.62	3.00	1.75	0.56	12	0.62	0.25	530	635
B2F12	2	1.38	3.00	1.50	0.44	12	0.75	0.38	600	720
B2F12N ①	2	1.38	3.00	1.75	0.56	12	0.62	0.38	600	720
B2G12N ①	2	1.50	3.00	1.75	0.56	12	0.62	0.50	700	840
B3D12	3	1.19	2.50	1.25	0.44	12	0.62	0.25	470	560
B3D12N ②	3	1.19	3.00	1.75	0.56	12	0.62	0.25	470	560
B3E12	3	1.64	3.00	1.50	0.44	12	0.75	0.31	700	840
B3E12N ①	3	1.64	3.00	1.75	0.56	12	0.62	0.31	700	840
B3F12	3	1.44	3.00	1.50	0.44	12	0.75	0.56	820	980
B3F12N ①	3	1.44	3.00	1.75	0.56	12	0.62	0.56	820	980
B3G12	3	1.69	3.00	1.50	0.44	12	0.75	0.69	960	1150
B3G12N ①	3	1.69	3.00	1.75	0.56	12	0.62	0.69	960	1150
B4D12	4	1.19	2.50	1.25	0.44	12	0.62	0.32	600	720
B4D12N ①	4	1.19	3.00	1.75	0.56	12	0.62	0.32	600	720
B4E12	4	1.64	3.00	1.50	0.44	12	0.75	0.38	850	1020
B4E12N ①	4	1.64	3.00	1.75	0.56	12	0.62	0.38	850	1020
B4F12	4	1.50	3.00	1.50	0.44	12	0.75	0.78	1000	1200
B4F12N ①	4	1.50	3.00	1.75	0.56	12	0.62	0.78	1000	1200
B4G12N ①	4	1.69	3.00	1.75	0.56	12	0.62	0.94	1200	1440

① Tongue drilled per (2) hole NEMA Standard
② Certified to CSA C22.2, No. 41 Grounding and Bonding Equipment Standards in addition to the UL467 Listing which all items above are Listed to.

NOTE:
Equivalent sizes may be designated by suffix letters representing variations in length, mounting configurations, pad size and finish. Contact factory for details. For Tin plated ferrules add suffix -TN to the catalog number.

TYPES GB, GBM

Ground Connector

For Copper Cable to Bar

High copper alloy ground connector for joining a range of cable to 1/4" thick bar.* Type GB separates cable from bar, GBM clamps cable directly on bar surface. One-wrench installation. UL467 Listed. The high copper alloy cast body and DURIUM™ bolts, nuts, and lockwashers make the GB and GBM suitable for direct burial in concrete or ground.

NOTE:

* The GB, GBM, GC, GCM, GL and GZ are all used for joining a range of cable to bar. The catalog numbers in each table accommodate the indicated cable range and up to 1/4" thick bar. Optional bolt lengths are available to accommodate up to 1″ thick bar. For bar thicknesses from 1/4" to 1/2", add the suffix "T4" to the catalog number in the table. For bar thicknesses from 1/2" to 1", add the suffix "T8" to the catalog number in the table.

Type GB — Type GBM

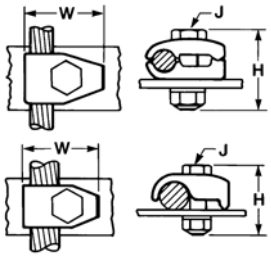

Catalog Number		Cable	H Type GB / GBL	H Type GBM	J	W Type GB/ GBL	W Type GBM	Rec. Torque
Type GB	Type GBM							
GB4C	GBM4C	8 AWG-4 AWG	1-1/2	1-1/2	3/8	1-1/4	1-1/4	240
GB26	GBM26	4 AWG-2/0 AWG	2	1-1/2	3/8	1-1/2	1-1/2	240
GBL30 ①	—	4 AWG-300 kcmil	2	—	1/2	1-7/8	—	480
GB29	GBM29	2/0 AWG-250 kcmil	2	2	1/2	2	2	480
GB34	GBM34	300 kcmil-500 kcmil	3	2-1/4	1/2	2-3/8	2-3/8	480

① GBL30 is not UL Listed

TYPES GC, GCM

Ground Connector

For Two Copper Cables to Bar

High copper alloy ground connector for joining a wide range of two parallel cables to 1/4" thick bar.* Type GC separates cable from bar, GCM clamps cable to bar surface. One-wrench installation. UL467 Listed. The high copper alloy cast body and DURIUM™ bolts, nuts, and lockwashers make the GC and GCM suitable for direct burial in concrete or ground.

NOTE:

* The GB, GBM, GC, GCM, GL and GZ are all used for joining a range of cable to bar. The catalog numbers in each table accommodate the indicated cable range and up to 1/4" thick bar. Optional bolt lengths are available to accommodate up to 1" thick bar. For bar thicknesses from 1/4" to 1/2", add the suffix "T4" to the catalog number in the table. For bar thicknesses from 1/2" to 1", add the suffix "T8" to the catalog number in the table.

Type GC — Type GCM

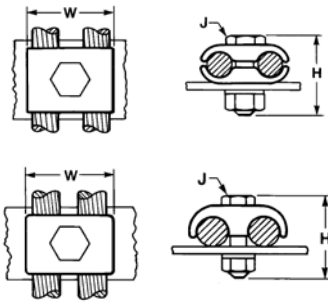

Catalog Number		Cable	H Type GC	H Type GCM	J	W Type GC/GCL	W Type GCM	Rec. Torque
Type GC	Type GCM							
GC4C4C	GCM4C	8 AWG-4 AWG	1-1/2	1-1/2	3/8	1-3/8	1	240
GC2626	GCM26	4 AWG-2/0 AWG	2	1-1/2	3/8	1-3/4	1-3/8	240
GCL30	GCM30	5 AWG-300 kcmil	2	—	1/2	1	—	480
GC2929	GCM29	2/0 AWG-250 kcmil	2-1/4	2	1/2	2-1/4	2	480
GC3434	GCM34	300 kcmil-500 kcmil	2-7/8	2-1/4	1/2	2-7/8	2-5/8	480

Blue highlighted items are industry standard and most frequently ordered.

TYPE GL

Ground Connector

For Two Copper Cables to Bar

High copper alloy ground connector for joining a wide range of two parallel cables to 1/4" thick bar.* Two-bolt design, separates cable from bar. One-wrench installation. UL467 Listed. The high copper alloy cast body and DURIUM™ bolts, nuts, and lockwashers make them suitable for direct burial in concrete or ground.

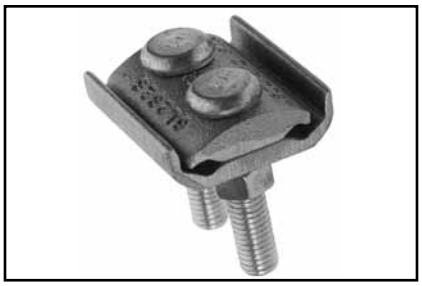

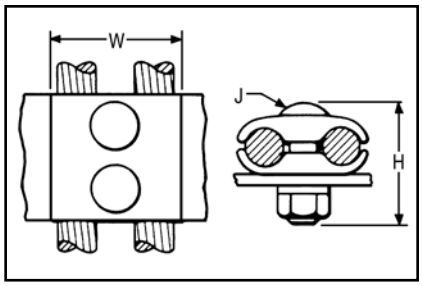

Catalog Number	Conductor	H	J	W
GL4C4C	8 AWG-4 AWG	1-1/2	3/8	1-3/8
GL2626	4 AWG-2/0 AWG	2	3/8	1-3/4
GL2929	2/0 AWG-250 kcmil	2-1/4	1/2	2-1/4
GL3434	300 kcmil-500 kcmil	2-7/8	1/2	2-7/8

NOTE:

* The GB, GBM, GC, GCM, GL and GZ are all used for joining a range of cable to bar. The catalog numbers in each table accommodate the indicated cable range and up to 1/4" thick bar. Optional bolt lengths are available to accommodate up to 1" thick bar. For bar thicknesses from 1/4" to 1/2", add the suffix "T4" to the catalog number in the table. For bar thicknesses from 1/2" to 1", add the suffix "T8" to the catalog number in the table.

TYPE GZ

Ground Connector

For Copper Cable to Bar

High copper alloy ground connector for joining a wide range of cable to 1/4" thick bar*. Cable is gripped by curving it around the clamping bolt in connector groove. UL467 Listed. The high copper alloy cast body and DURIUM™ bolts, nuts, and lockwashers make them suitable for direct burial in concrete or ground.

NOTE:

* The GB, GBM, GC, GCM, GL and GZ are all used for joining a range of cable to bar. The catalog numbers in each table accommodate the indicated cable range and up to 1/4" thick bar. Optional bolt lengths are available to accommodate up to 1" thick bar. For bar thicknesses from 1/4" to 1/2", add the suffix "T4" to the catalog number in the table. For bar thicknesses from 1/2" to 1", add the suffix "T8" to the catalog number in the table.

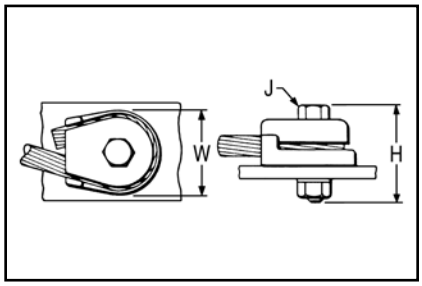

Catalog Number	Conductor	H	J	W
GZ4C-38	8-4	1-1/2	3/8	1-1/8
GZ4C-12	8-4	1-7/8	1/2	1-3/4
GZ4C-58	8-4	2	5/8	1-3/4
GZ26-38	3-2/0	2	3/8	1-5/8
GZ26-12	3-2/0	2-1/8	1/2	1-3/4
GZ26-58	3-2/0	2-1/4	5/8	1-3/4
GZ29-38	3/0-250	2-1/4	3/8	2-1/4
GZ29-12	3/0-250	2-3/8	1/2	2-1/4
GZ29-58	3/0-250	2-1/2	5/8	2-1/4

TYPE GC-CT

Cabletray Ground Clamp

This unique connector incorporates features which are unmatched. Made of tin-plated cast copper alloy, it accommodates either one or two conductors, copper or aluminum cable. In addition to a low profile head with a deep Phillips recess, the galvanized steel bolt has a ribbed neck which prevents rotation during installation when installed in a 0.44 diameter hole. When used on aluminum conductor, the cable must be scratch brushed and PENETROX™ A joint compound must be used on cable and connector. UL467 Listed for copper conductor only. Suitable for direct burial in concrete or earth.

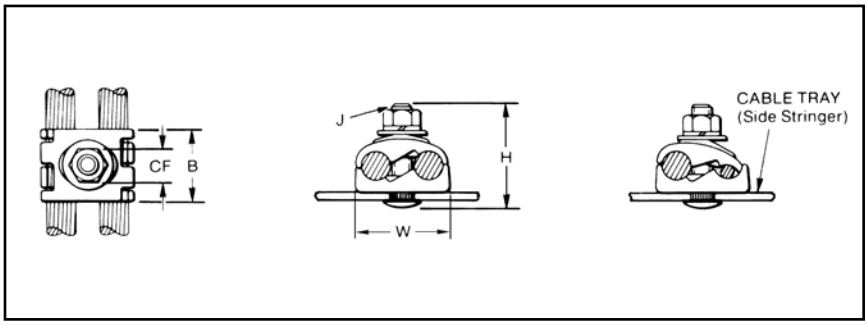

Catalog Number	Accommodates Copper or Aluminum Conductor in either groove	B	CF	H	J	W
GC2525CT	#6 Sol. (0.16 Dia.) - 1/0 Str. (0.37 Dia.)	1.12	0.56	1.95	3/8	1.45
GC2626CT	#2 Sol. (0.26 Dia.) - 2/0 Str. (0.42 Dia.)	1.12	0.56	1.95	3/8	1.70
GC2929CT	2/0 Str. (0.41 Dia.) - 250 kcmil (0.58 Dia.)	1.12	0.56	2.20	3/8	1.98

NOTE:
The bolt head is mounted on the inside wall of cabletray to avoid damage to the cable insulation. May be used with aluminum or galvanized steel cabletray.

TYPE GIE-G

Ground Connector

For Vehicle Grounding Heavy Duty Construction

High-strength copper alloy ground clamps for grounding gasoline trucks, tank cars, aircraft and other vehicles where danger of explosion due to static electricity exists. Corrosion resistant and supplied with nonsparking, adjustable, replaceable contact grip screws. Automatic safety release disconnects should a vehicle unexpectedly move from the grounded area. Accommodates 4 Str. flexible copper cable.

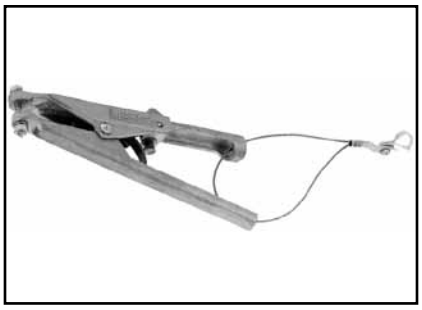

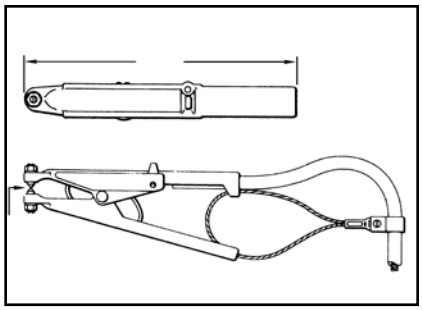

Catalog Number	Description	Material	Point Configuration
GIE4CG3	Assembly Beryllium Copper	Beryllium Copper	Assembly
GIE4CG4	Assembly Stainless Steel	Stainless Steel	Assembly

Replacement Tips Only			
Catalog Number	**Description**	**Material**	**Point Configuration**
GIE4CG3P5	Beryllium Copper CONE Point Only	Beryllium Copper	Cone Point
GIE4CG3P7	Beryllium Copper CUP Point Only	Beryllium Copper	Cup Point
GIE4CG4P5	Stainless Steel CONE Point Only	Stainless Steel	Cone Point
GIE4CG4P7	Stainless Steel CUP Point Only	Stainless Steel	Cup Point

TYPE GIE-G

Ground Connector

For Vehicle Grounding, Heavy Duty Construction

Accommodates flexible rubber sheath cable ranging from #6 to #2 conductor.

Catalog Number: **GIE2CG3**

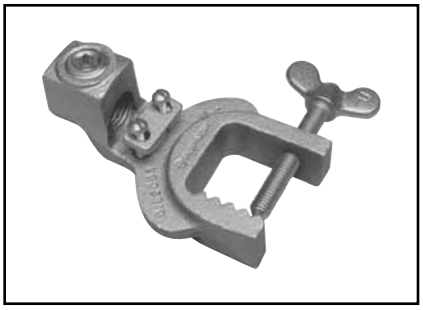

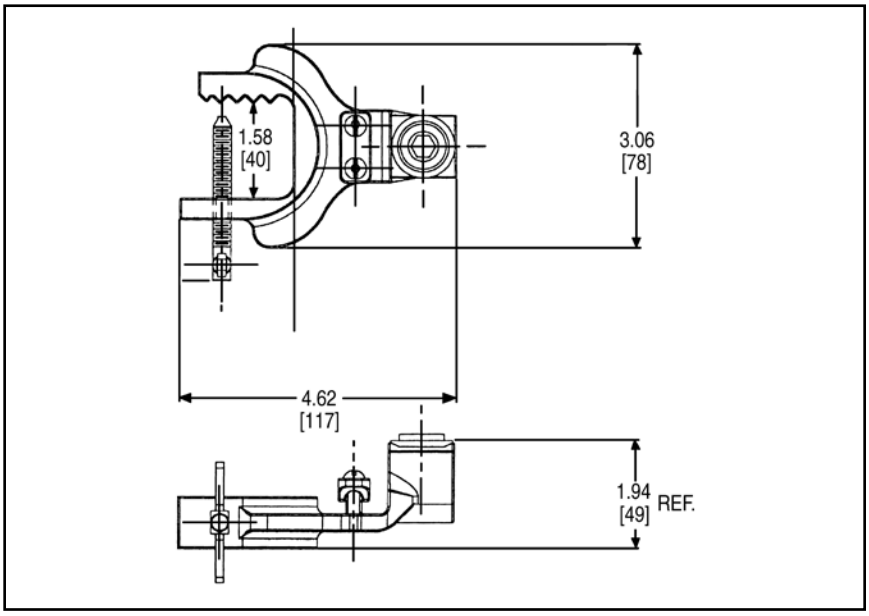

Blue highlighted items are industry standard and most frequently ordered.

TYPE GCB63T13G1

STUDBUG™ for Static Grounding Applications

GCB63T13G1 is a temporary grounding stud for use on rail cars, chemical trucks, hazardous waste tankers or a petroleum vehicle to allow for static grounding protection, while in operation. It provides a contact point, allowing the rail car, truck or tanker to be grounded to an equipotential grid or ground rod, by using static reel or a ground cable.

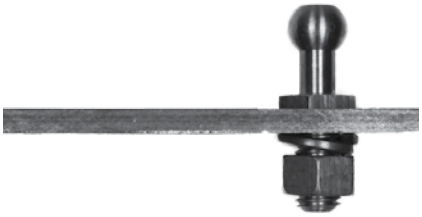

Features & Benefits

- Made of bronze, and supplied with silicon bronze hardware
- Secured by ½" hexagonal nut and split lock washer
- Can be used with universal clamps and ball stud clamps
- Can be used at various angles to reach inaccessible areas
- Add suffix "SS" for grounding stud with stainless steel hardware

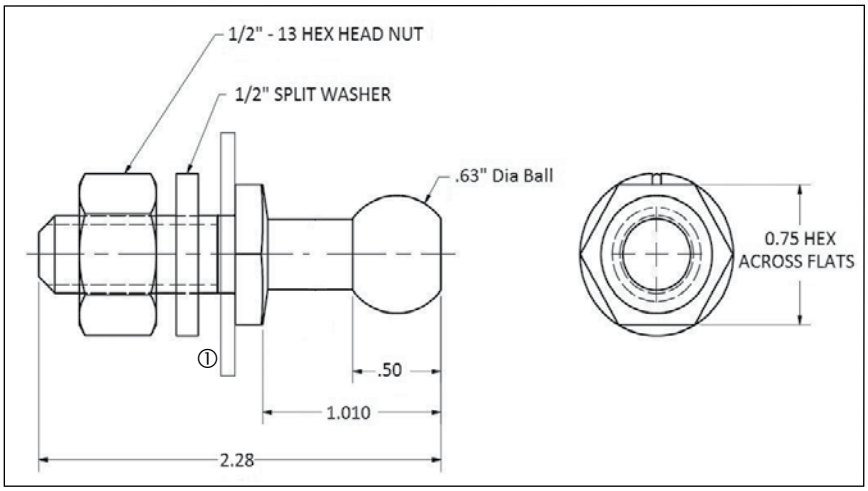

Note:
① Can be used with plate, bus bar or structural steel up to 1/4" thick.

BURNDY® Static Discharge Reels

Static Discharge Reels are an excellent addition to the BURNDY® static discharge line of products. These reels are often used to dissipate static charge buildup developed while filling or dispensing fuel or other combustible liquids from fuel trucks or rail cars. Often used in the petroleum industry but applicable in any area where static discharge creates a potential hazard.

BURNDY® offers the three most common static discharge reels found in the market. These reels are heavy duty, with 50' lengths and are supplied with a 100 amp universal jaw-type grounding clamp. All reels come standard with spring rewind and centrifugal brake. The tension can be adjusted on these reels and installation instructions are included to ensure the most efficient mounting method.

Every reel is **Proudly Made in the USA** and meets the stringent quality expectations of the BURNDY® portfolio of grounding products.

Features & Benefits

- Automatic E-Z PULL™ Rewinding
- Rugged Steel Construction
- Compact Enclosed Design
- Positive Ratchet Lock
- Includes Ratchet On/Off Switch
- Steel Cable Installed
- 100 Amp Universal Jaw-Type Grounding Clamp
- Red Baked-on Finish
- 50' Cable Length
- Made in the USA

Catalog Number	Cable Length	# of Jaw-Type Grounding Clamps	Weight (lb.)
BSD2050	50 Feet	1	12
BSD2050N	50 Feet (Nylon Covered)	1	12
BSD2050Y	35 Feet plus 15 Feet for 'Y'	2	13

RAIL CONNECTOR

Mechanical clamp connectors designed for use in power, contact or running rail applications. Connectors are cast of a high conductivity copper alloy, tin-plated, and assembled with high-strength DURIUM™ hardware. Connectors designed for extended service life.

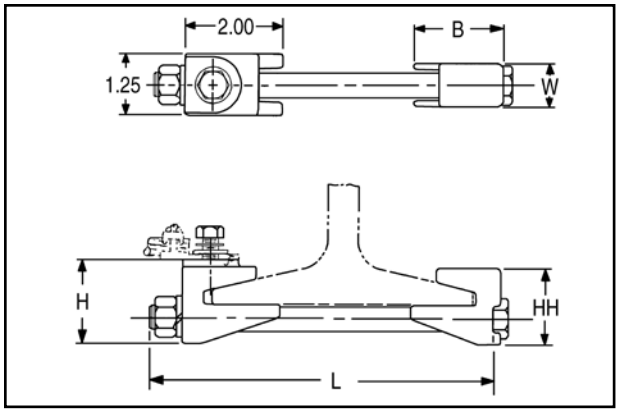

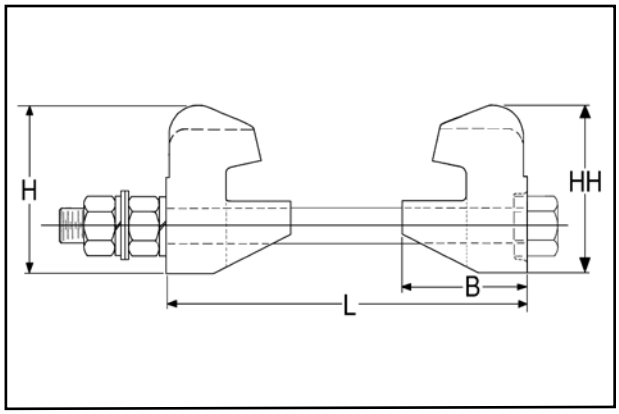

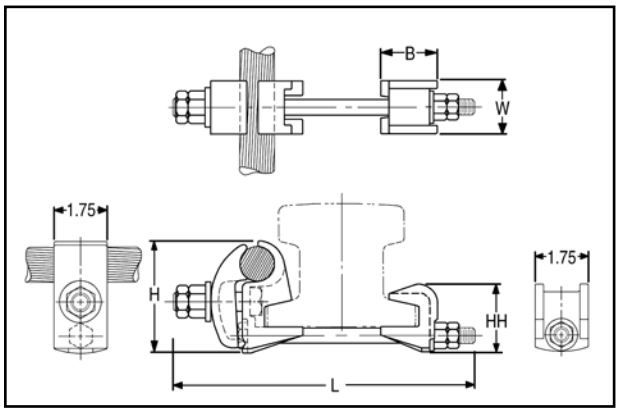

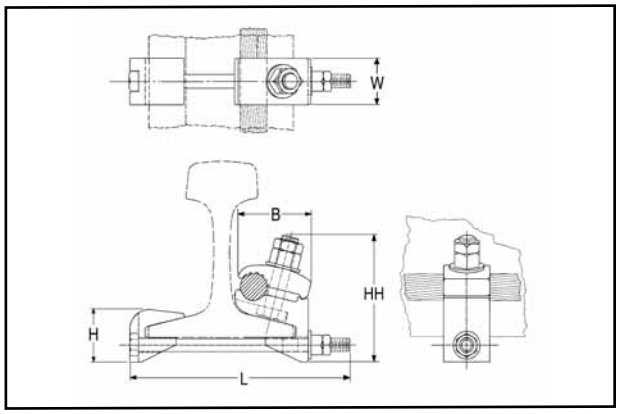

Catalog Number	Fig. No.	Accommodates	B	H	HH	L	W
J278	1	100 Lbs. A.R.E.A Running Rail	1.81	1.88	1.72	7.50	0.88
J279	1	75 or 90 Lbs. Running Rail	1.81	1.71	1.55	7.50	0.88
J280	1	150 Lbs. Contact Rail	2.12	2.08	1.92	7.00	1.25
J295	2	150 Lbs. Third Rail	2.62	3.50	3.50	7.75	3.00
RGC44G1 ①	3	150 Lbs. NMC Contact Rail and (1) 800-1000 kcmil CU Cable	1.75	2.82	2.25	10.00	1.75
RGC39G1 ①	4	115 Lbs. Contact or Running Rail and (1) 500-750 kcmil CU Cable	2.75	2.00	4.78	8.32	1.25

① Tin-plated

Blue highlighted items are industry standard and most frequently ordered.

QGFL

BARTAP™

For Copper Cable to
Flat Bar or Pad

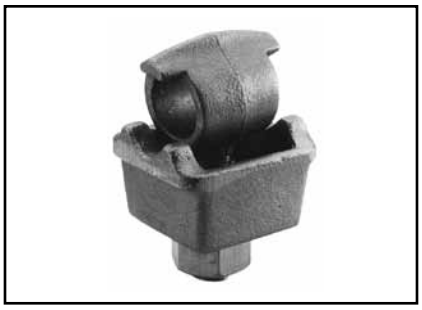

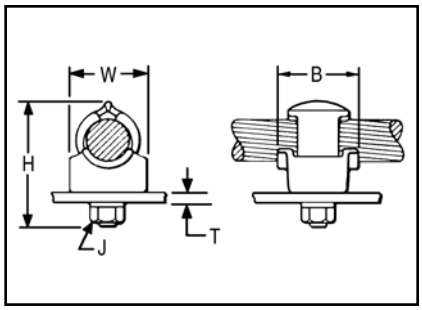

High copper alloy BARTAP™ for joining a range of cable to bar or pad. One-wrench installation. DURIUM™ nut and lockwasher. Can be installed side by side or in line on NEMA drilled bar.

Catalog Number	Copper Conductor	B	H	J	T (Max)	W
QGFL1CB1	#10 Sol. - #1 Str.	1-1/8	1-7/8	3/8	1/4	1
QGFL1CB1T6	#10 Sol. - #1 Str.	1-1/8	2-3/8	3/8	3/4	1
QGFL26B1	#8 Sol. - #2/0 Str.	1-1/4	2-1/8	3/8	1/4	1-1/8
QGFL26B1T6	#8 Sol. - #2/0 Str.	1-1/4	2-5/8	3/8	3/4	1-1/8
QGFL26B2*	#8 Sol. - #2/0 Str.	1-1/4	2-8/25	1/2	1/4	1-1/8
QGFL26B2T6*	#8 Sol. - #2/0 Str.	1-1/2	2-40/50	1/2	3/4	1-1/8
QGFL29B1*	#6 Str. - 250 kcmil	1-2/5	2-5/8	1/2	1/4	1-3/8
QGFL29B1T6*	#6 Str. - 250 kcmil	1-5/8	3-1/8	1/2	3/4	1-3/8
QGFL31B1*	2 AWG - 350 kcmil	1-3/4	2-7/8	1/2	1/4	1-5/8
QGFL31B1T6*	2 AWG - 350 kcmil	1-3/4	3-1/4	1/2	3/4	1-5/8
QGFL34B1	1/0 -500 kcmil	2	3-1/8	1/2	1/4	1-3/4
QGFL34B1T6	1/0 -500 kcmil	2	3-5/8	1/2	3/4	1-3/4
QGFL39B1	350 kcmil - 750 kcmil	2-1/4	3-1/4	1/2	1/4	1-3/4
QGFL39B1T6	350 kcmil - 750 kcmil	2-1/4	3-5/8	1/2	3/4	1-3/4
QGFL44B1	750 kcmil - 1000 kcmil	2-1/4	3-3/8	1/2	1/4	2-1/8
QGFL44B1T6	750 kcmil - 1000 kcmil	2-1/4	4-1/8	1/2	3/4	2-1/8
QGFL46B1	1000 kcmil - 1500 kcmil	2-1/4	4	1/2	1/4	2-1/2
QGFL46B1T6	1000 kcmil - 1500 kcmil	2-1/4	4-1/2	1/2	3/4	2-1/2
QGFL48B1	1500 kcmil - 2000 kcmil	2-1/4	4-3/4	1/2	1/4	3

* Can be installed side by side or in line on NEMA drilled bar.

TYPE GA-H

Ground Connector

For Copper Cable to "H" Beam

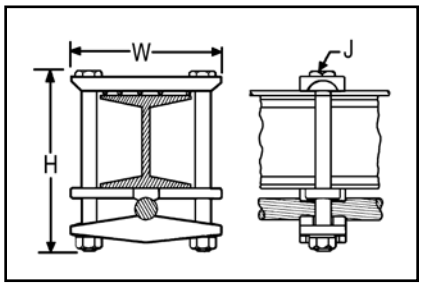

High copper alloy ground connector for joining a wide range of cable parallel to "H" beams or square tube. Hardware is made from DURIUM™ for superior corrosion protection.

Catalog Number	Conductor		H	J	W
	"H" Beam	Cable			
GA25H26	1-7/8" - 2-1/2" X 2-1/2"	4 Sol. - 2/0 Str.	4-3/4	3/8	4

Blue highlighted items are industry standard and most frequently ordered.

TYPE GXP1828RF

SUPER-CLAMP™

SUPER-CLAMP™ RAISED FLOOR GROUND CONNECTOR

Raised Floor Pedestal Ground Connector. The GXP1828RF is a versatile, easy to install, range taking ground connector. This grounding clamp accepts a wide range of pedestals and conductors. Accepted pedestal range is 3/4" through 2" (7/8 - 2" round; 3/4" - 1-1/2" square). The wire range is #6 solid to 4/0 stranded. The wires can be arranged in parallel or in a cross grid configuration - accepts 1 or 2 wires.

UL Listed for the US and Canadian markets (cULus). A high copper alloy body ensures excellent conductivity and the hardware is made of stainless steel. The connector is also rated for Direct Burial. The versatility of the connector makes it an excellent choice for applications requiring multiple conductor sizes and/or configurations.

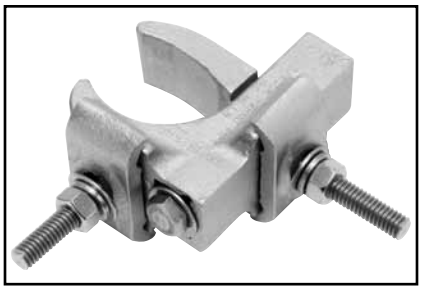

Features & Benefits

- Fits a wide range of raised floor pedestals, from 3/4" to 2" (7/8 - 2" round; 3/4" - 1-1/2" square)
- Accepts a wide range of wire sizes, from #6 solid to 4/0 stranded
- Accommodates parallel wires or cross grid arrangements; wires can be installed in cross grid configuration!
- Accepts one or two wires in any configuration
- Easy to install - open design eliminates need to disassemble before installing
- One socket size fits all hardware! (1/2" socket size)
- Made of high copper alloy
- Stainless steel hardware
- UL Listed for the US and Canadian markets (cULus)
- Rated for Direct Burial

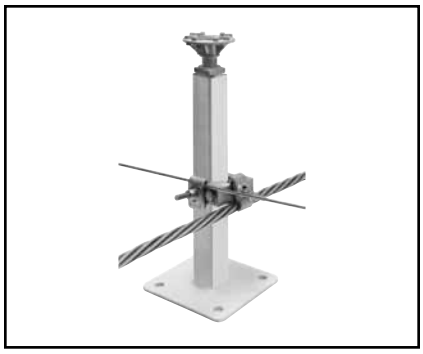

Cross Grid Configuration

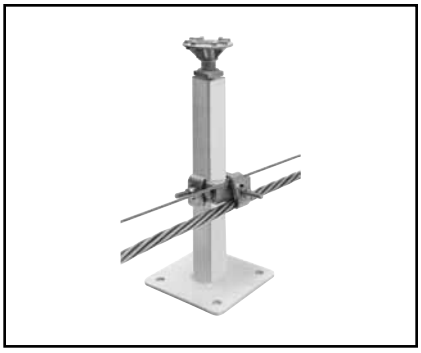

Parallel Configuration

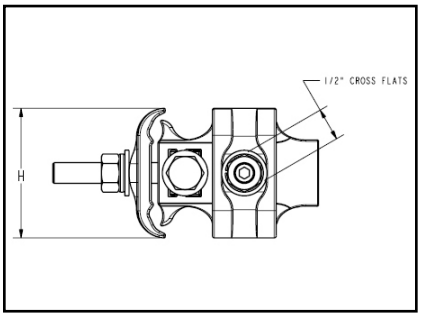

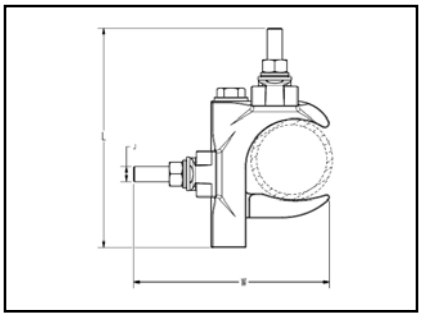

Works on either Round or Square Pedestals

Catalog Number	Copper Conductor Range (Concentric & Compact Stranded 19 Str. Max)	Pedestal Range	Reference Dimensions				Recommended Tightening Torque (in-lb.)	
			L	W	H	J	Conductor Saddle (Nut)	Pedestal Clamp (Bolt)
GXP1828RF	6 AWG 5 AWG 4 AWG 3AWG 2 AWG 1AWG 1/0 AWG 2/0 AWG 3/0 AWG 4/0 AWG	Round: 7/8" - 2" Square: 3/4" - 1-1/2"	4.53	3.94	1.96	5/16	120	180

Blue highlighted items are industry standard and most frequently ordered.

TYPE GRF

UNIGROUND™

UNIGROUND™ Raised Floor Grounding Connector

The BURNDY® UNIGROUND™ is a universal grounding clamp, specifically designed for all raised flooring systems. It can be installed on round or square pedestals and can accommodate one or two grounding wires to make an efficient grid. The underfloor signal reference grid provides the low impedance ground path that attenuates high frequency static and 60 Hz transient noise for cleaner data output. UL467 Listed.

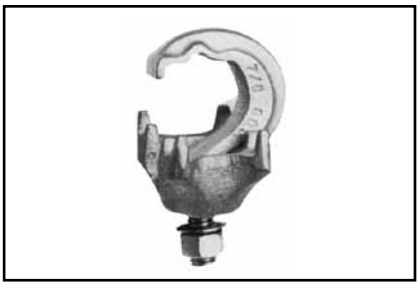

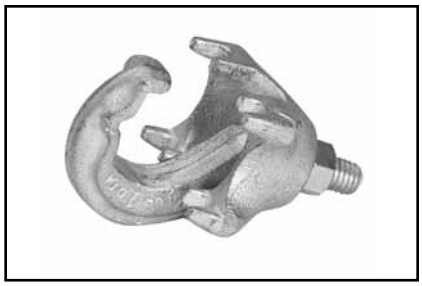

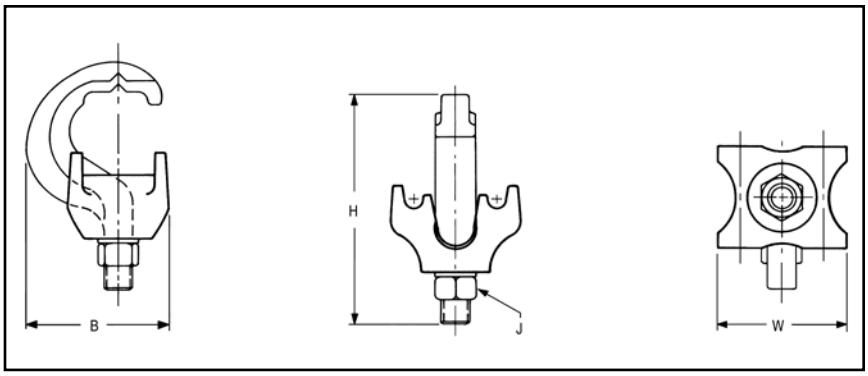

Features & Benefits

- One connector fits all applications
- Ease of specification and installation
- Single bolt design
  - -Ease of installation:
  - — No need to disassemble
  - — Single wrench installation
- Accepts 1 or 2 ground conductors
- Requires less connectors to install signal reference grid
- Tin plated cast bronze construction
- Resists corrosion and provides extended life ground connection
- Grounds all pedestals (round or square). Will handle up to 7/8" square and 1" round
- Ease of installation. One connector does it all
- Serves 3 needs:
  1. Signal Reference Grid
  2. Static Ground
  3. Fault Current Ground
- UNIGROUND™ solves all possible grounding problems found in computer applications today

Catalog Number	Number of Conductors	Conductor Size Sol. & Str.	Pedestal Type		B	H	J	W
			Round	Square				
GRF4C-3	1 or 2	#8 - #2	Up to 1"	Up to 7/8"	1.96	3.14	3/8	1.76
GRF4C-4	1 or 2	#8 - #2	Up to 3/4"	Up to 5/8"	1.79	3.13	3/8	1.40

Blue highlighted items are industry standard and most frequently ordered.

TYPES GP-G1, GP-RT

Raised Floor Grounding Clamps

High copper alloy ground connector for raised floor computer grounding applications. These connectors can be installed on round and square pedestal applications and will accommodate one or two grounding wires to make an efficient grid. The underfloor signal reference grid provides the low impedance ground path that attenuates high frequency static and 60 Hz transient noise for cleaner data output. UL467 Listed.In addition we offer the GP1726RT, which is especially designed for penetrating epoxy paint on pedestals. This patented connector offers a low impedance, time saving connection between conductors and the pedestal.

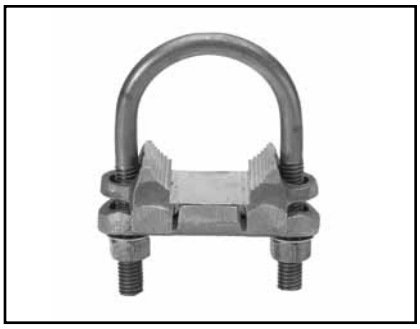

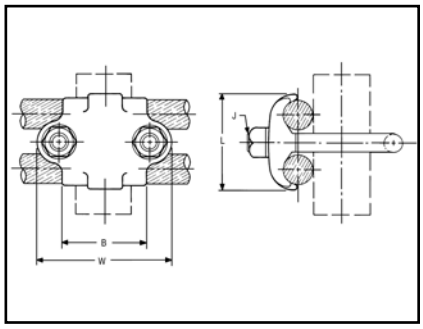

Features & Benefits

- Accepts 1 or 2 Ground Conductors
- Requires less connectors to install signal reference grid
- Made of copper alloy
- DURIUM™ U-Bolts, nuts and lockwashers
- Provides a low impedance ground path for maximum performance
- Grounds all pedestals (round or square)
- Will handle from 3/4" to 1" round or square
- Ease of installation.
- Serves 3 needs
  1. Signal Reference Grid
  2. Static Ground
  3. Fault Current Ground
- Connectors solves all possible grounding problems found in computer applications today

Catalog Number	Number of Conductors	Conductor Size Sol. & Str.	Pedestal Type Round or Square	B	J	L	W
GP654CG1	1 or 2	#8 Sol. - 4 Str.	Round/Square	1.50	3/8	1.31	2.38
GP64526G1	1 or 2	#4 Sol. - 2/0 Str.	Round/Square	1.50	3/8	1.69	2.38
GP1526G1	1 or 2	#4 Sol. - 2/0 Str.	Round	1.75	3/8	1.69	2.62
GP1726RT	1 or 2	#6 Sol. - 2/0 Str.	Round/Square	2.12	3/8	1.50	3.22
GP1726G1	1 or 2	#6 Sol. - 2/0 Str.	Round	2.12	3/8	1.50	3.22

Blue highlighted items are industry standard and most frequently ordered.

TYPE BBB

BURNDY® Bus Bar

Copper Bus Bar

Bare copper BusBar, UL Listed for grounding. Available in many sizes and hole patterns. Brackets and insulators included with most styles. Also available in undrilled, horizontal and vertical versions. BusBar is used in a variety of applications. Can be used as a common ground point and "power" applications as well.

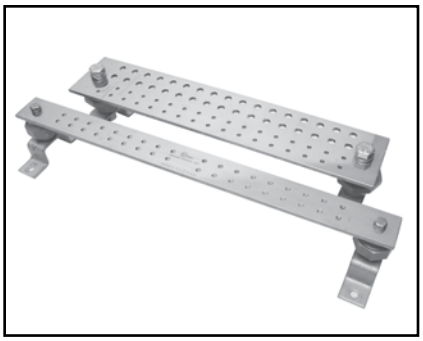

Catalog Number	Fig No.	Insulator & Bracket	T - Bar Thickness	W - Bar Width	L - Bar Length	E1	E2	E3	F1	F2	No. of Holes	K
BBB-14210A	1	0.63	1/4"	2 in	10"	0.63	—	—	1.00	—	16	0.28
BBB-14224B	2	0.62	1/4"	2 in	24"	0.62	0.75	—	1.00	1.00	36	0.28
BBB-14410C	3	0.75	1/4"	4 in	10"	0.75	1.00	—	1.25	—	22	0.44
BBB-14410D	4	1.25	1/4"	4 in	10"	1.25	1.00	—	1.13	1.13	22	0.44
BBB-14412E	5	0.75	1/4"	4 in	12"	0.75	1.00	—	2.00	1.25	18	0.44
BBB-14412F	6	1.00	1/4"	4 in	12"	1.00	0.75	—	2.00	1.25	24	0.44
BBB-14416G	7	0.75	1/4"	4 in	16"	0.75	1.00	—	1.69	—	24	0.44
BBB-14416H	8	1.00	1/4"	4 in	16"	1.00	1.00	0.75	1.69	—	32	0.44
BBB-14420J	9	1.00	1/4"	4 in	20"	1.00	1.00	0.75	1.00	—	68	0.44
BBB412UD	—	N/A	1/4"	4 in	12"	N/A	N/A	N/A	N/A	N/A	0	—
BBB-424-UD	—	N/A	1/4"	4 in	24"	N/A	N/A	N/A	N/A	N/A	0	—
BBB-HR19	12	0.38	3/16"	3/4 in	19"	0.38	—	—	—	—	8	—
BBB-VR36	13	0.32	1/4"	5/8 in	36"	0.32	—	—	—	—	16	—

* Contact factory for custom sizes.

NOTE:

For separately ordering Insulator & Brackets use catalog number **B38723000**.

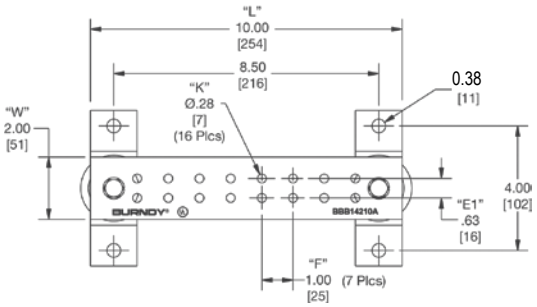

Figure 1

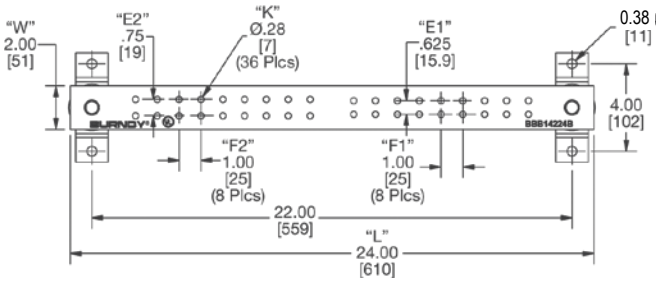

Figure 2

Blue highlighted items are industry standard and most frequently ordered.

TYPE BBB

BURNDY® Bus Bar

Copper Bus Bar (Continued)

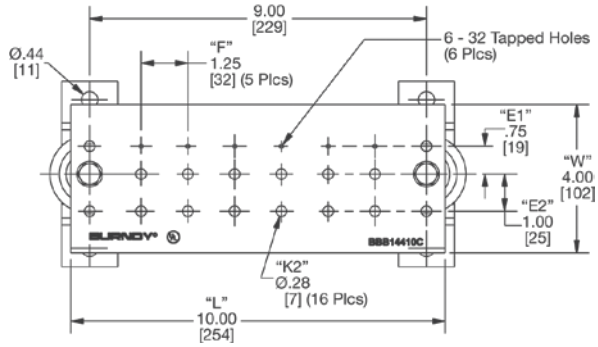

Figure 3

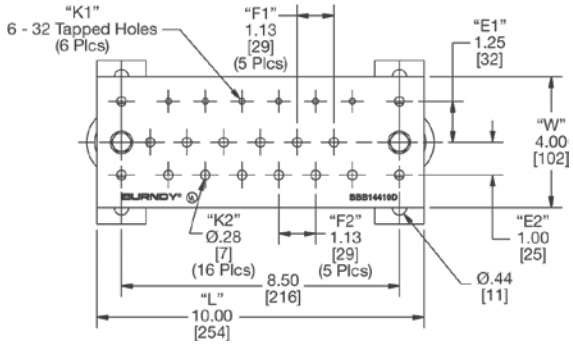

Figure 4

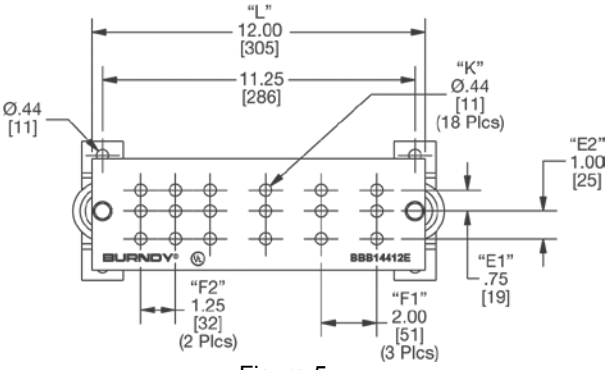

Figure 5

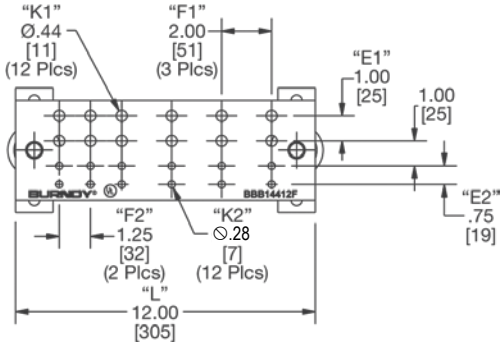

Figure 6

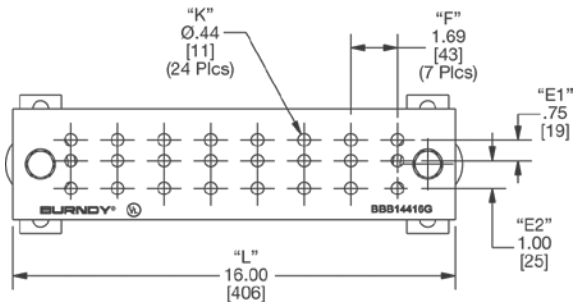

Figure 7

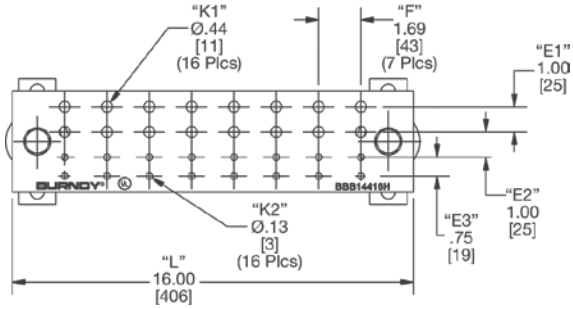

Figure 8

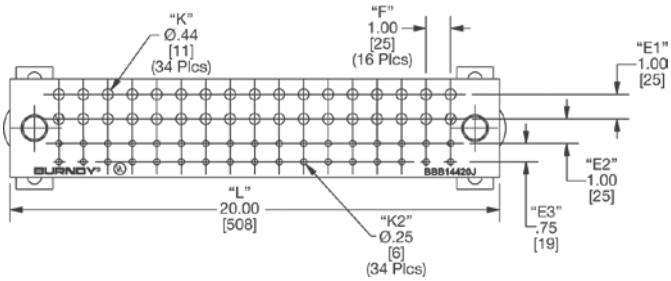

Figure 9

Blue highlighted items are industry standard and most frequently ordered.

BWB680 Series

BURNDY® Pool Water Bonding Kit

NEC 680.26(C) states: “An intentional bond of minimum conductive surface area of 9" shall be installed in contact with the pool water. This bond shall be permitted to consist of parts that are rquired to be bonded in 680.26(B)”.

In order to comply with this requirement BURNDY is offering the BWB680 Series. Made of non-corrosive stainless steel, the BURNDY water bonding kit maintains constant contact with pool water to ensure that the pool is effectively bonded at all times.

BURNDY BWB680 Series is one of the few and the most user friendly, products on the market that complies with this code. Other products are placed in the plumbing, which is not always in contact wtih the water and therefore does not meet the code. Since the BWB680 Series is placed in the skimmer, it is always in contact with the water.

Included in the BURNDY BWB680 Series Bonding Kit: One (1) bonding plate; one (1) rubber sealing washer; two (2) flat washers; two (2) lock washers; two (2) nuts; and one (1) BURNDY CL501-TN

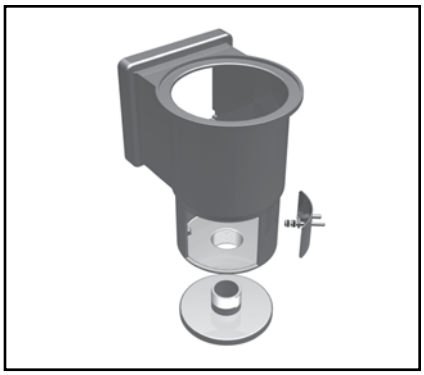

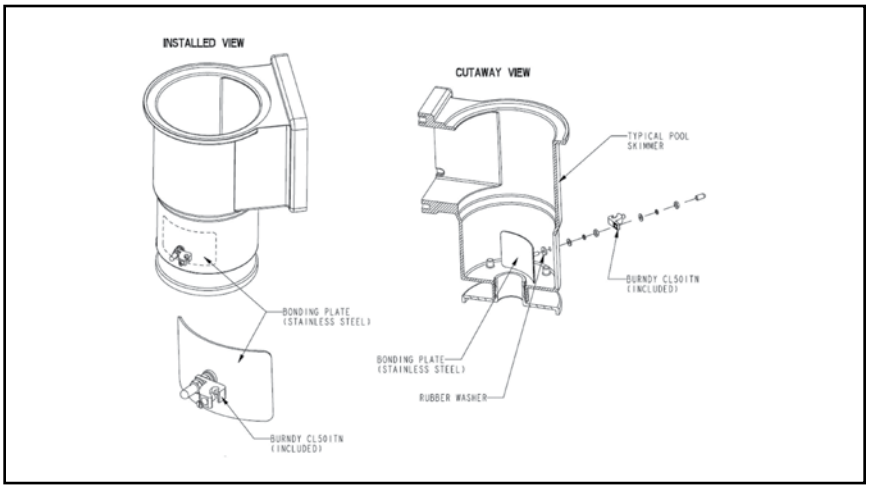

Features & Benefits

- Easy installation
- Mounting hardware included
- UL Listed
- Placed out of the way on the side wall of the skimmer below the basket

Catalog Number	Pool Type
BWB680AG	Above Ground
BWB680IG	In-Ground

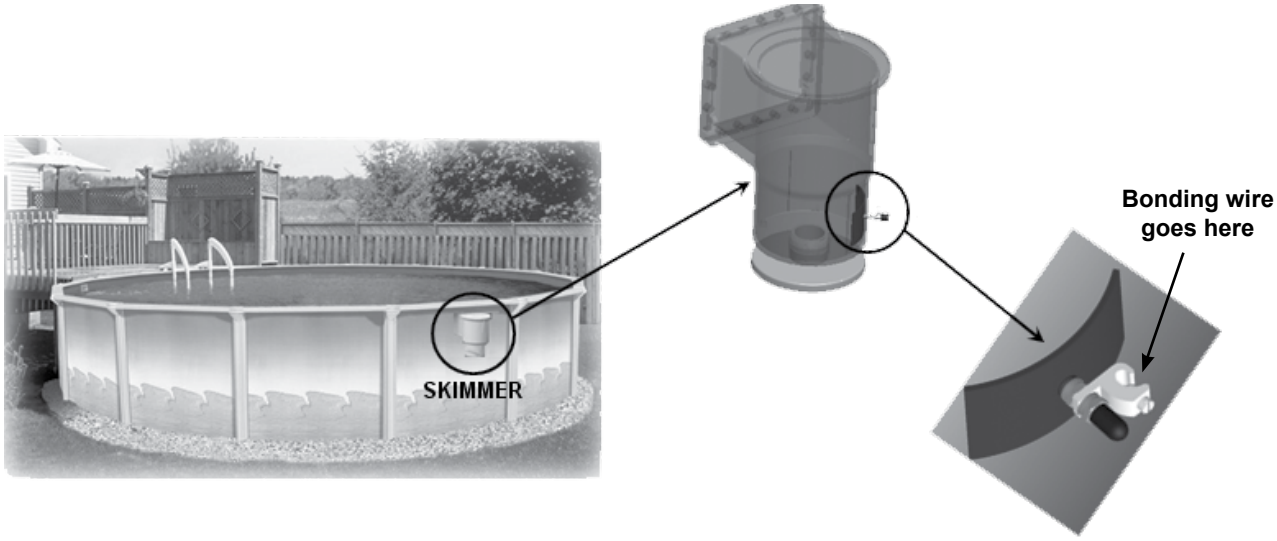

Blue highlighted items are industry standard and most frequently ordered.

BURNDYWeld® QIKLITE®

BURNDYWeld® Weld Metal

Battery Ignition System

The self-contained unit offers a built-in battery life indicator, 6' ignitor cord and separate buttons for power and ignition. Also, no starting powder is used with this system so emissions are greatly reduced. QIKLITE® works with "off-the-shelf" molds and weld metal, so contractors and installers can continue to use the same quality BURNDYWeld® products.

Since the unit operates with standard weld metal and molds, installers also have the option of using a traditional flint ignitor or the new QIKLITE® system. Another feature is the speed of ignition, with virtually no delay between depressing the "push to operate" button and ignition of the weld metal. This instant ignition feature offers quick reassurance to the installer, without the delay.

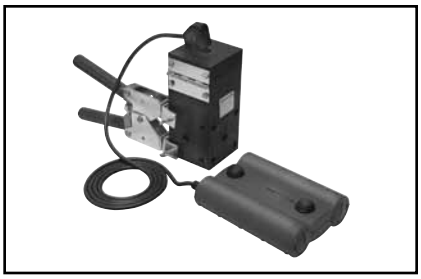

Features & Benefits

- The QIKLITE® system allows installers to make exothermic connections remotely
- Uses standard exothermic molds and weld metal
- Use the new BURNDYWeld® QIKLITE® system or use a flint ignitor, this versatility makes this system better than anything available in the industry
- Installers have virtually 100% confidence that the connection can be completed with no wasted material or weld metal shots
- No starting material required - which greatly reduces the amount of emissions generated
- Power is supplied by 4 standard "D" Size batteries
- Built-in battery life indicator
- There's virtually no delay in ignition after depressing the "push to operate" button
- Separate ON/OFF and Operate buttons
- Comes complete with durable 6' heat resistant cord
- Durable, long-lasting design
- QIKSTIK ignitor sticks are conveniently packaged and available separately or available packaged complete with standard weld metal

Catalog Number Standard Cartridge Size with Ignitor	Cartridges/ Ignitors Per Box
15Q	20
25Q	20
32Q	10
45Q	20
65Q	20
90Q	10
115Q	10
150Q	10
200Q	10
250Q	10
500Q	10
QIKSTIK*	10

* Ignitor stick only.

Catalog Number	Description
QIKLITE	Battery Ignition System
QIKLITEKIT	QIKLITE® Battery Ignition System and 20 QIKSTIK Ignitor Sticks

BURNDYWeld®

The BURNDYWeld® connection process is a simple, efficient method of welding copper to copper or copper to steel. One advantage is that NO outside power is required when using the BURNDYWeld® exothermic process. The BURNDYWeld® process uses high temperature reaction of powdered copper oxide and aluminum. The reaction takes place in a semi-permanent graphite mold. These molds will last for fifty or more welds if proper car is given. The reaction takes place very rapidly, therefore the total amount of heat applied to the conductors or surfaces is considerably less than that of brazing or soldering. It is important to remember this when welding to insulated cable or thin wall pipe.

This system is very field friendly, since it is light and portable and requires no outside power source. It requires very little time or skill to obtain an efficient, maintenance free connection when using the BURNDYWeld® process.

For more information, visit our website at: *www.burndy.com.*

The BURNDYWeld® process has been used to weld materials other than copper for electrical purposes. Materials welded include:

Stainless Steel
Copperweld®
Nichrome V
Galvanized Steel
Silicon Bronze
Copper Clad Steel
Columbium
Plain Steel
Everdur®
Kama
Stell Rail
Cor-Ten®
Brass
Bronze
Niobium
Chromax
Cast Iron
Monel

When welding to galvanized steel it is recommended to resurface exposed bare steel.

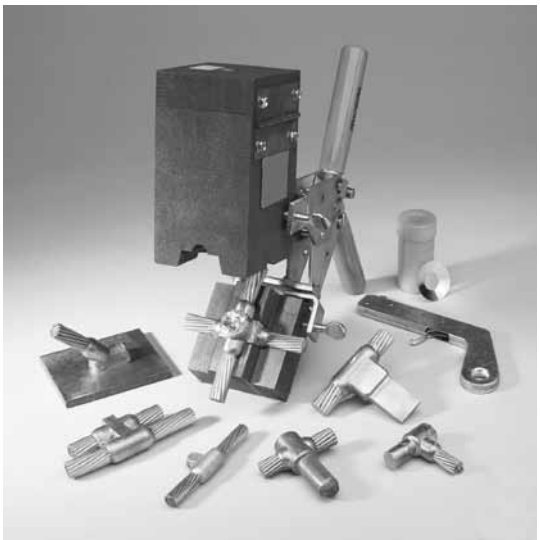

The BURNDYWeld® connection is a molecular weld. The weld metal has the same melting point as copper. These factors along with the increased cross section of the connection, BURNDYWeld® connections:

1. Will not be affected by a high current surge. Tests have shown that the electrical conductor will melt before the BURNDYWeld® connection when subjected to high short circuit current. Consult IEEE Standard 837-1989.
2. Will not loosen or corrode at the point of weld. There are no contact surfaces or mechanical pressures involved. A BURNDYWeld® connection becomes an integral part of the conductor.
3. Have a current-carrying capacity equal to or greater than that of the conductors.

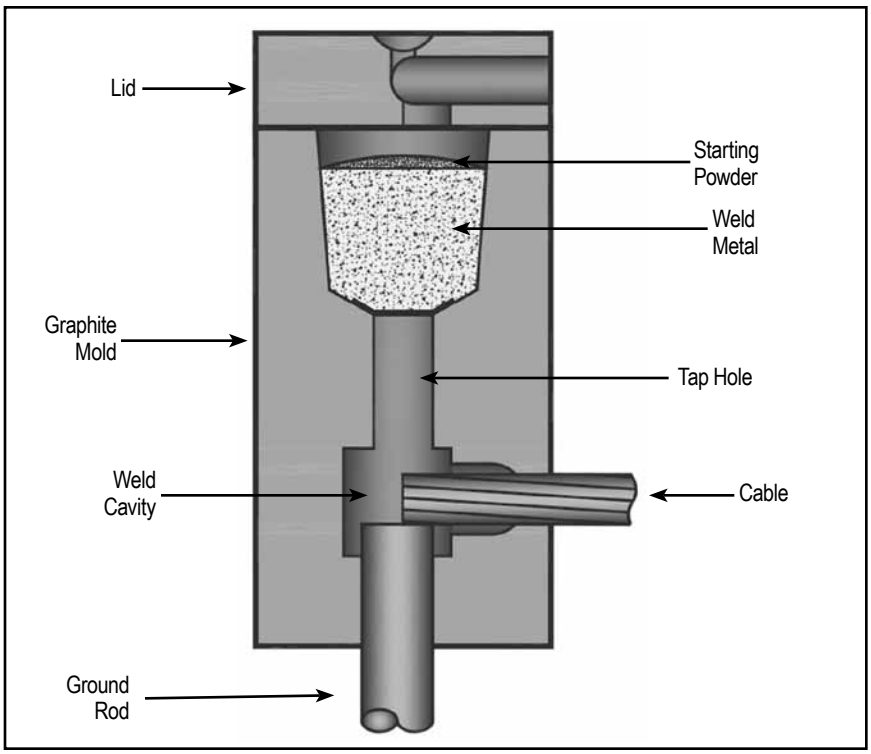

Making a BURNDYWeld® Connection

Step 1
Position cleaned conductors in mold after make sure mold is dry, by pre-heating or making a test joint.

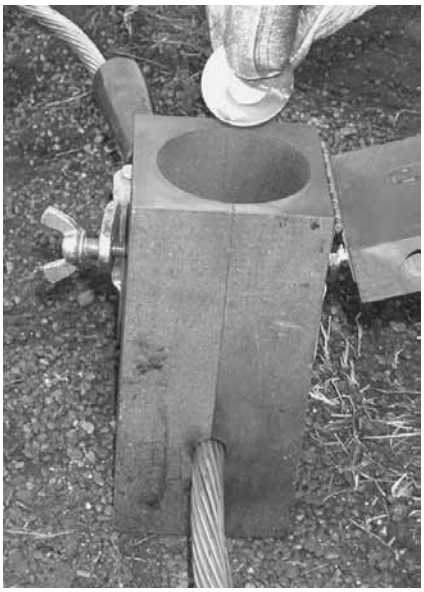

Step 2
Place metal disc in bottom of mold crucible.

Step 3
Dump powder into crucible, being careful not to loosen all the starting powder.

Step 4
Close lid and place a small amount of starting powder in the ignition pocket.

Step 5
Ignite the starting powder with the Flint Ignitor.

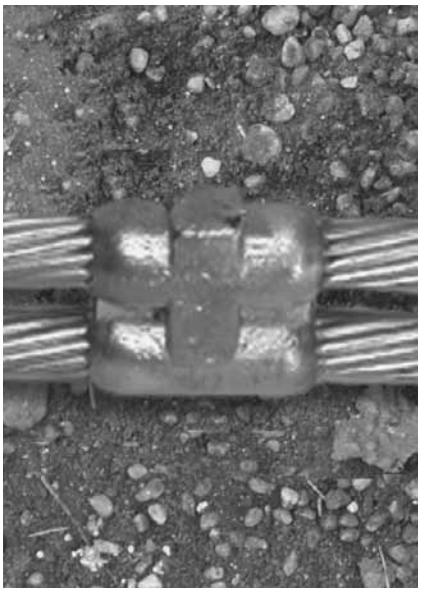

Step 6
Wait 15 seconds, then remove weld and clean mold before making next connection.

Blue highlighted items are industry standard and most frequently ordered.

BURNDYWeld® Weld Metal

BURNDYWeld® Weld Metal is packed in moisture-resistant plastic cartridges that have tight fitting caps. These cartridges, along with the necessary steel discs, are then packed in boxes that are hermetically sealed. This ensures the powder arriving in good condition, always dry and ready for fast positive ignition. BURNDYWeld® Weld Metal comes in several types; one for welding copper to copper, copper to steel, copper to cast iron and one for welding copper to steel for cathodic protection. The size and weight (in grams) of the cartridge are marked on each individual cartridge.

Weld metal and steel discs are sold only in standard box quantities.

Features & Benefits

- Packed in moisture-resistant plastic cartridges that have tight fitting caps. These cartridges, along with the necessary steel discs, are then packed in boxes that are hermetically sealed. This ensures the powder arriving in good condition, always dry and ready for fast positive ignition.

Catalog Number *	Description	Cartridges Per Box
15	Standard Cartridge	20
25	Standard Cartridge	20
32	Standard Cartridge	10
45	Standard Cartridge	20
65	Standard Cartridge	20
90	Standard Cartridge	10
115	Standard Cartridge	10
150	Standard Cartridge	10
200	Standard Cartridge	10
250	Standard Cartridge	10
500	Standard Cartridge	10

* Add Q to suffix to include Qikstik

Catalog Number	Description	Cartridges Per Box
15CI	Cast Iron Cartridge	20
25CI	Cast Iron Cartridge	20
32CI	Cast Iron Cartridge	10
45CI	Cast Iron Cartridge	20
65CI	Cast Iron Cartridge	20
90CI	Cast Iron Cartridge	10
115CI	Cast Iron Cartridge	10

Catalog Number	Description	Cartridges Per Box
15CP	Cathodic Protection Cartridge	20
25CP	Cathodic Protection Cartridge	20
32CP	Cathodic Protection Cartridge	10
45CP	Cathodic Protection Cartridge	20
65CP	Cathodic Protection Cartridge	20

Weld Metal Size	Catalog Number Steel Discs Only	Package Quantity
15 to 65	B370320-01	20
90 to 115	B370320-02	10
150 to 500	B370320-03	10

Blue highlighted items are industry standard and most frequently ordered.

BCC-1 TYPE MOLDS

Horizontal End to End

BCC-1 Type Molds are used for horizontal end to end cable connections.

Size range is #6 through 1000 kcmil solid or concentric stranded copper conductors.

Contact BURNDY® for information on molds for conductors not listed below.

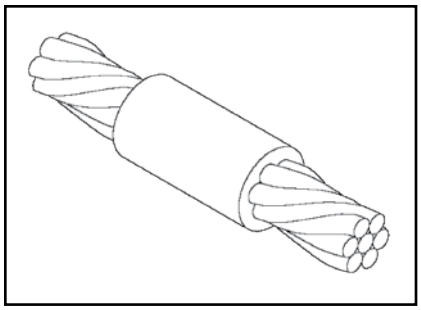

Cable		Mold Number	Price Key	Weld Metal	Handle Clamps
Run	Tap				
#4	#4	**B-5623**	18 ①	25	Incl.
#3	#3	**B-5624**	18 ①	32	Incl.
#2	#2	**B-5625**	18 ①	32	Incl.
#1	#1	**B-5626**	18 ①	32	Incl.
1/0	1/0	**B-205**	4	45	B-106
2/0	2/0	**B-206**	4	65	B-106
3/0	3/0	**B-207**	4	90	B-106
4/0	4/0	**B-208**	4	90	B-106
250 kcmil	250 kcmil	**B-209**	4	115	B-106
300 kcmil	300 kcmil	**B-210**	4	115	B-106
350 kcmil	350 kcmil	**B-211**	4	150	B-106
500 kcmil	500 kcmil	**B-213**	4	200	B-107
750 kcmil	750 kcmil	**B-214**	5	2-150	B-107
1000 kcmil	1000 kcmil	**B-215**	5	2-200	B-107

① **B38-0309-00** Flint ignitor included

NOTES:
- For sizes not listed, contact BURNDY®
- Molds listed are for concentric stranded cable; add suffix "-S" to mold number for solid conductors
- For heavy duty molds, molds with wear plates or molds for Copperweld ® cable, contact BURNDY®
- For expedited service, contact BURNDY®

Required Tools:
Handle Clamps - see chart for correct handle catalog number

Recommended Accessories:
B38-0309-00 Flint Ignitor
B38-3922-00 Mold Cleaning Brush
B38-0135-00 Cable Cleaning Brush
B38-0330-00 Cable Clamp

TYPE BCC-2 MOLDS

Horizontal Cable Tap to Horizontal Cable Run

Type BCC-2 Molds are used to join horizontal cable tap to a horizontal run cable. Size range is #6 through 750 kcmil solid or concentric stranded copper conductors. Contact BURNDY® for information on molds for conductors not listed below.

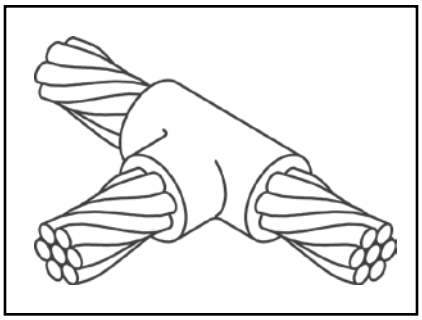

NOTES:
- For sizes not listed, contact BURNDY®
- Molds listed are for concentric stranded cable; add suffix "-S" to mold number for solid conductors
- For heavy duty molds, molds with wear plates or molds for Copperweld® cable, contact BURNDY®
- For expedited service, contact BURNDY®

Required Tools:
Handle Clamps - see chart for correct handle catalog number

Recommended Accessories:
B38-0309-00 Flint Ignitor; **B38-3922-00** Mold Cleaning Brush; **B38-0135-00** Cable Cleaning Brush; **B38-0330-00** Cable Clamp

Cable		Mold Number	Price Key	Weld Metal	Handle Clamps
Run	Tap				
#4	#4	**B-221**	4	32	B-106
#2	#2	**B-223**	4	45	B-106
	#4	**B-224**	4	45	B-106
#1	#1	**B-225**	4	45	B-106
	#2	**B-226**	4	45	B-106
	#4	**B-227**	4	45	B-106
1/0	1/0	**B-228**	4	90	B-106
	#1	**B-229**	4	45	B-106
	#2	**B-230**	4	45	B-106
	#4	**B-231**	4	45	B-106
2/0	2/0	**B-232**	4	90	B-106
	1/0	**B-333**	4	90	B-106
	#1	**B-234**	4	45	B-106
	#2	**B-235**	4	45	B-106
	#4	**B-5475**	4	45	B-106
3/0	3/0	**B-236**	4	115	B-106
	2/0	**B-237**	4	90	B-106
	1/0	**B-238**	4	90	B-106
	#1	**B-239**	4	45	B-106
	#2	**B-240**	4	45	B-106
	#4	**B-5574**	4	45	B-106
4/0	4/0	**B-241**	4	150	B-106
	3/0	**B-242**	4	115	B-106
	2/0	**B-243**	4	90	B-106
	1/0	**B-244**	4	90	B-106
	#1	**B-245**	4	90	B-106
	#2	**B-246**	4	90	B-106
	#4	**B-5021**	4	90	B-106
250 kcmil	250 kcmil	**B-247**	4	150	B-106
	4/0	**B-248**	4	150	B-106
	3/0	**B-249**	4	150	B-106
	2/0	**B-250**	4	90	B-106
	1/0	**B-251**	4	90	B-106
	#1	**B-252**	4	90	B-106
	#2	**B-253**	4	90	B-106

Cable		Mold Number	Price Key	Weld Metal	Handle Clamps
Run	Tap				
300 kcmil	300 kcmil	**B-254**	4	200	B-106
	250 kcmil	**B-255**	4	150	B-106
	4/0	**B-256**	4	150	B-106
	3/0	**B-257**	4	150	B-106
	2/0	**B-258**	4	90	B-106
	1/0	**B-259**	4	90	B-106
	#1	**B-260**	4	90	B-106
	#2	**B-261**	4	90	B-106
350 kcmil	350 kcmil	**B-262**	4	200	B-106
	300 kcmil	**B-263**	4	200	B-106
	250 kcmil	**B-264**	4	200	B-106
	4/0	**B-265**	4	150	B-106
	3/0	**B-266**	4	150	B-106
	2/0	**B-267**	4	90	B-106
	1/0	**B-268**	4	90	B-106
	#1	**B-269**	4	90	B-106
	#2	**B-270**	4	90	B-106
500 kcmil	500 kcmil	**B-280**	4	2-150	B-106
	350 kcmil	**B-282**	4	200	B-106
	300 kcmil	**B-283**	4	200	B-106
	250 kcmil	**B-284**	4	200	B-106
	4/0	**B-285**	4	150	B-106
	2/0	**B-286**	4	90	B-106
	1/0	**B-287**	4	90	B-106
	#1	**B-288**	4	90	B-106
	#2	**B-289**	4	90	B-106
750 kcmil	750 kcmil	**B-290**	5	500	B-107
	500 kcmil	**B-291**	5	2-200	B-107
	350 kcmil	**B-293**	4	250	B-106
	300 kcmil	**B-294**	4	200	B-106
	250 kcmil	**B-295**	4	200	B-106
	4/0	**B-296**	4	150	B-106
	2/0	**B-297**	4	150	B-106
	1/0	**B-298**	4	150	B-106

Blue highlighted items are industry standard and most frequently ordered.

TYPE BCC-4 MOLDS

Horizontal to Horizontal Cable Cross

Type BCC-4 Molds are used to join two horizontal cables at right angles. One cable is cut and the other is a through run. Size range is #6 through 500 kcmil solid or concentric stranded copper conductors. Contact BURNDY® for information on molds for conductors not listed below.

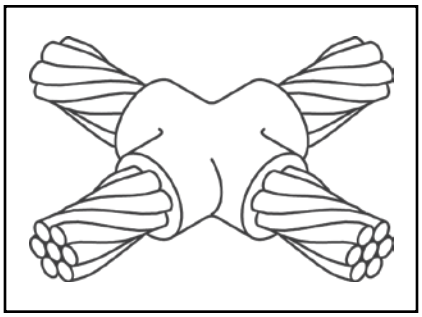

NOTES:
- For sizes not listed, contact BURNDY®
- Molds listed are for concentric stranded cable; add suffix "-S" to mold number for solid conductors
- For heavy duty molds, molds with wear plates or molds for Copperweld® cable, contact BURNDY®
- For expedited service, contact BURNDY®

Required Tools:
Handle Clamps - see chart for correct handle catalog number

Recommended Accessories:
B38-0309-00 Flint Ignitor; **B38-3922-00** Mold Cleaning Brush; **B38-0135-00** Cable Cleaning Brush; **B38-0330-00** Cable Clamp

Cable		Mold Number	Price Key	Weld Metal	Handle Clamps
Run	Tap				
#4	#4	**B-423**	4	45	B-106
#3	#3	**B-424**	4	45	B-106
#2	#2	**B-425**	4	65	B-106
	#4	**B-426**	4	65	B-106
#1	#1	**B-427**	4	65	B-106
	#2	**B-428**	4	65	B-106
	#4	**B-429**	4	65	B-106
1/0	1/0	**B-430**	4	90	B-106
	#1	**B-431**	4	90	B-106
	#2	**B-432**	4	90	B-106
	#4	**B-433**	4	90	B-106
2/0	2/0	**B-434**	4	115	B-106
	1/0	**B-435**	4	115	B-106
	#1	**B-436**	4	115	B-106
	#2	**B-437**	4	115	B-106
3/0	3/0	**B-438**	4	150	B-106
	2/0	**B-439**	4	150	B-106
	1/0	**B-440**	4	115	B-106
	#1	**B-441**	4	115	B-106
	#2	**B-442**	4	115	B-106
4/0	4/0	**B-443**	4	200	B-106
	3/0	**B-444**	4	200	B-106
	2/0	**B-445**	4	150	B-106
	1/0	**B-446**	4	150	B-106
	#1	**B-447**	4	115	B-106
	#2	**B-448**	4	115	B-106
250 kcmil	250 kcmil	**B-449**	4	200	B-106
	4/0	**B-450**	4	200	B-106
	3/0	**B-451**	4	200	B-106
	2/0	**B-452**	4	150	B-106
250 kcmil	1/0	**B-453**	4	150	B-106
	#1	**B-454**	4	115	B-106
	#2	**B-455**	4	115	B-106

Cable		Mold Number	Price Key	Weld Metal	Handle Clamps
Run	Tap				
300 kcmil	300 kcmil	**B-456**	4	250	B-106
	250 kcmil	**B-457**	4	250	B-106
	4/0	**B-458**	4	200	B-106
	3/0	**B-459**	4	200	B-106
	2/0	**B-460**	4	150	B-106
	1/0	**B-461**	4	150	B-106
	#1	**B-462**	4	115	B-106
	#2	**B-463**	4	115	B-106
350 kcmil	350 kcmil	**B-464**	4	250	B-106
	300 kcmil	**B-465**	4	250	B-106
	250 kcmil	**B-466**	4	250	B-106
	4/0	**B-467**	4	200	B-106
	3/0	**B-468**	4	200	B-106
	2/0	**B-469**	4	200	B-106
	1/0	**B-470**	4	200	B-106
	#1	**B-471**	4	150	B-106
	#2	**B-472**	4	150	B-106
500 kcmil	500 kcmil	**B-483**	5	500	B-107
	350 kcmil	**B-485**	5	2-200	B-107
	300 kcmil	**B-486**	5	2-200	B-107
	250 kcmil	**B-487**	5	2-150	B-107
	4/0	**B-488**	5	2-150	B-107
	3/0	**B-489**	5	2-150	B-107
	2/0	**B-490**	4	250	B-106
	1/0	**B-491**	4	250	B-106
	#1	**B-492**	4	200	B-106
	#2	**B-493**	4	200	B-106

Blue highlighted items are industry standard and most frequently ordered.

TYPE BCC-11 MOLDS

Horizontal to Horizontal Cable Cross

Type BCC-11 Molds are used to join uncut horizontal cables at right angles to each other. Size range is #6 through 500 kcmil solid or concentric stranded copper conductors. Contact BURNDY® for information on molds for conductors not listed below.

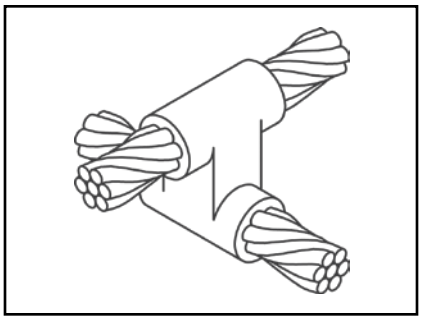

NOTES:
- For sizes not listed, contact BURNDY®
- Molds listed are for concentric stranded cable; add suffix "-S" to mold number for solid conductors
- For heavy duty molds, molds with wear plates or molds for Copperweld® cable, contact BURNDY®
- For expedited service, contact BURNDY®

Required Tools:
Handle Clamps - see chart for correct handle catalog number

Recommended Accessories:
B38-0309-00 Flint Ignitor; **B38-3922-00** Mold Cleaning Brush; **B38-0135-00** Cable Cleaning Brush; **B38-0330-00** Cable Clamp

Cable		Mold Number	Price Key	Weld Metal	Handle Clamps
Run	Tap				
#6	#6	**B-5432**	19	45	Incl.
#4	#4	**B-2687**	4	65	B-106
#2	#2	**B-2689**	4	90	B-106
	#4	**B-2690**	4	65	B-106
#1	#1	**B-2691**	4	115	B-106
	#2	**B-2692**	4	90	B-106
	#4	**B-2693**	4	90	B-106
1/0	1/0	**B-2694**	22	150	B-106
	#1	**B-2695**	22	150	B-106
	#2	**B-2696**	22	115	B-106
	#4	**B-2697**	22	115	B-106
2/0	2/0	**B-2698**	22	200	B-106
	1/0	**B-2699**	22	200	B-106
	#1	**B-2700**	22	150	B-106
	#2	**B-2701**	22	150	B-106
3/0	3/0	**B-2702**	22	250	B-106
	2/0	**B-2703**	22	200	B-106
	1/0	**B-2704**	22	200	B-106
	#1	**B-2705**	22	150	B-106
	#2	**B-2706**	22	150	B-106
4/0	4/0	**B-2707**	22	250	B-106
	3/0	**B-2708**	22	250	B-106
	2/0	**B-2709**	22	200	B-106
	1/0	**B-2710**	22	200	B-106
	#1	**B-2711**	22	150	B-106
	#2	**B-2712**	22	150	B-106

Cable		Mold Number	Price Key	Weld Metal	Handle Clamps
Run	Tap				
250 kcmil	250 kcmil	**B-2713**	22	2-150	B-106
	4/0	**B-2714**	22	2-150	B-106
	3/0	**B-2715**	22	2-150	B-106
	2/0	**B-2716**	22	250	B-106
	1/0	**B-2717**	22	150	B-106
	#1	**B-2718**	22	200	B-106
	#2	**B-2719**	22	150	B-106
500 kcmil	500 kcmil	**B-2747**	23	3-250	B-107
	250 kcmil	**B-2751**	23	500	B-107
	4/0	**B-2752**	23	500	B-107
	3/0	**B-2753**	23	500	B-107
	2/0	**B-2754**	23	2-200	B-107
	1/0	**B-2755**	22	2-150	B-106
	#1	**B-2756**	22	250	B-106
	#2	**B-2757**	22	250	B-106

Blue highlighted items are industry standard and most frequently ordered.

BCC-6 TYPE MOLDS

Horizontal Parallel Tap

BCC-6 Type Molds are used to join horizontal parallel tap to run connections. The tap cable is over the run cable. Size range is #6 through 4/0 solid or concentric stranded copper conductors. Contact BURNDY® for information on molds for conductors not listed below.

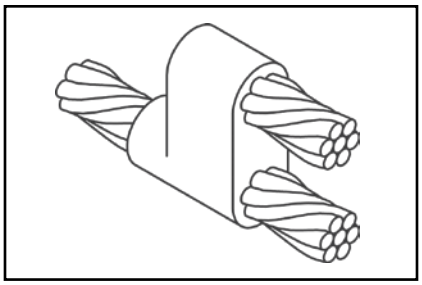

NOTES:
- For sizes not listed, contact BURNDY®
- Molds listed are for concentric stranded cable; add suffix "-S" to mold number for solid conductors
- For heavy duty molds, molds with wear plates or molds for Copperweld® cable, contact BURNDY®
- For expedited service, contact BURNDY®

Required Tools:
Handle Clamps - see chart for correct handle catalog number

Recommended Accessories:
B38-0309-00 Flint Ignitor; **B38-3922-00** Mold Cleaning Brush; **B38-0135-00** Cable Cleaning Brush; **B38-0330-00** Cable Clamp

Cable		Mold Number	Price Key	Weld Metal	Handle Clamps
Run	Tap				
#6 Sol	#6 Sol	**B-1270**	4	25	B-106
#6	#6	**B-1271**	4	25	B-106
#4	#4	**B-1272**	4	32	B-106
	#6	**B-1273**	4	32	B-106
	#6 Sol	**B-1274**	4	32	B-106
	#8 Sol	**B-1275**	4	32	B-106
#2	#2	**B-1276**	4	65	B-106
	#4	**B-1277**	4	45	B-106
	#6	**B-1278**	4	32	B-106
	#6 Sol	**B-1279**	4	32	B-106
	#8 Sol	**B-1280**	4	32	B-106
#1	#1	**B-1281**	4	65	B-106
	#2	**B-1282**	4	65	B-106
	#4	**B-1283**	4	45	B-106
	#6	**B-1284**	4	45	B-106
	#6 Sol	**B-1285**	4	45	B-106
	#8 Sol	**B-1286**	4	45	B-106
1/0	1/0	**B-1287**	4	90	B-106
	#1	**B-1288**	4	90	B-106
	#2	**B-1289**	4	65	B-106
	#4	**B-1290**	4	65	B-106
	#6	**B-1291**	4	45	B-106
	#6 Sol	**B-1292**	4	45	B-106
	#8 Sol	**B-1293**	4	45	B-106

Cable		Mold Number	Price Key	Weld Metal	Handle Clamps
Run	Tap				
2/0	2/0	**B-1294**	4	115	B-106
	1/0	**B-1295**	4	115	B-106
	#1	**B-1296**	4	90	B-106
	#2	**B-1297**	4	90	B-106
	#4	**B-1298**	4	65	B-106
	#6	**B-1299**	4	65	B-106
	#6 Sol	**B-1300**	4	65	B-106
	#8 Sol	**B-1301**	4	65	B-106
4/0	4/0	**B-1302**	4	150	B-106
	2/0	**B-1303**	4	115	B-106
	1/0	**B-1304**	4	115	B-106
	#1	**B-1305**	4	115	B-106
	#2	**B-1306**	4	115	B-106
	#4	**B-1307**	4	90	B-106
	#6	**B-1308**	4	90	B-106
	#6 Sol	**B-1309**	4	90	B-106
	#8 Sol	**B-1310**	4	90	B-106

BCC-14 TYPE MOLDS

Horizontal Parallel through Cables

BCC-14 Type Molds are used to join horizontal parallel through run cables. Cables run side by side in the mold. Size range is #8 through #6 solid or concentric stranded copper conductors. Contact BURNDY® for information on molds for conductors not listed.

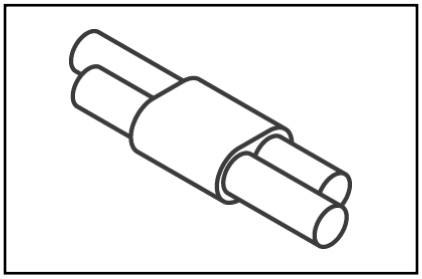

Cable		Mold Number	Price Key	Weld Metal
Run	Tap			
#8	#8	**B-5709**	18	15
#6	#6	**B-5618**	18	25

NOTES:
- For sizes not listed, contact BURNDY®
- Molds listed are for concentric stranded cable; add suffix "-S" to mold number for solid conductors
- For heavy duty molds, molds with wear plates or molds for Copperweld® cable, contact BURNDY®
- For expedited service, contact BURNDY®
- Sold complete with handles

Blue highlighted items are industry standard and most frequently ordered.

BCC-7 TYPE MOLDS

Horizontal Parallel through Cables

BCC-7 Type Molds are used to join horizontal parallel through run cables. One cable runs above the other cable in the mold. Size range is #6 through 4/0 solid or concentric stranded copper conductors. Contact BURNDY® for information on molds for conductors not listed below

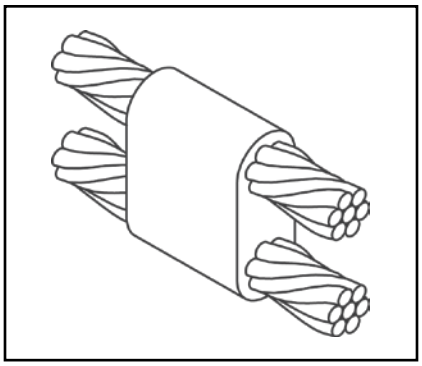

NOTES:
- For sizes not listed, contact BURNDY®
- Molds listed are for concentric stranded cable; add suffix "-S" to mold number for solid conductors
- For heavy duty molds, molds with wear plates or molds for Copperweld® cable, contact BURNDY®
- For expedited service, contact BURNDY®

Required Tools:
Handle Clamps - see chart for correct handle catalog number

Recommended Accessories:
B38-0309-00 Flint Ignitor; **B38-3922-00** Mold Cleaning Brush; **B38-0135-00** Cable Cleaning Brush; **B38-0330-00** Cable Clamp

Cable		Mold Number	Price Key	Weld Metal	Handle Clamps
Run	Tap				
#4	#4	**B-1311**	4	32	B-106
	#6	**B-5627**	4	32	B-106
	#6 Sol	**B-8882**	4	32	B-106
	#8	**B-5629**	4	32	B-106
	#8 Sol	**B-5630**	4	32	B-106
#2	#2	**B-1313**	4	65	B-106
	#4	**B-1314**	4	65	B-106
	#6	**B-5631**	4	45	B-106
	#6 Sol	**B-5632**	4	45	B-106
	#8	**B-5634**	4	45	B-106
	#8 Sol	**B-5635**	4	45	B-106
#1	#1	**B-1315**	4	65	B-106
	#2	**B-1316**	4	65	B-106
	#4	**B-1317**	4	65	B-106
	#6	**B-5636**	4	65	B-106
	#6 Sol	**B-5637**	4	65	B-106
	#8	**B-5638**	4	45	B-106
	#8 Sol	**B-5639**	4	45	B-106
1/0	1/0	**B-1318**	4	90	B-106
	#1	**B-1319**	4	65	B-106
	#2	**B-1320**	4	65	B-106
	#4	**B-1321**	4	65	B-106
	#6	**B-5642**	4	65	B-106
	#6 Sol	**B-1208**	4	65	B-106
	#8	**B-5644**	4	65	B-106
	#8 Sol	**B-5645**	4	65	B-106

Cable		Mold Number	Price Key	Weld Metal	Handle Clamps
Run	Tap				
2/0	2/0	**B-1322**	4	115	B-106
	1/0	**B-1323**	4	115	B-106
	#1	**B-1324**	4	90	B-106
	#2	**B-1325**	4	90	B-106
	#4	**B-5659**	4	90	B-106
	#6	**B-5342**	4	90	B-106
	#6 Sol	**B-5652**	4	90	B-106
	#8	**B-5668**	4	65	B-106
3/0	#8 Sol	**B-5943**	4	65	B-106
	3/0	**B-1326**	4	150	B-106
	2/0	**B-1327**	4	150	B-106
	1/0	**B-1328**	4	115	B-106
	#1	**B-1329**	4	115	B-106
	#2	**B-1330**	4	115	B-106
	#4	**B-6046**	4	115	B-106
	#6	**B-5676**	4	90	B-106
	#6 Sol	**B-5679**	4	90	B-106
	#8	**B-5680**	4	90	B-106
	#8 Sol	**B-5682**	4	90	B-106
4/0	4/0	**B-1331**	4	200	B-106
	3/0	**B-1332**	4	200	B-106
	2/0	**B-1333**	4	150	B-106
	1/0	**B-1334**	4	150	B-106
	#1	**B-1335**	4	150	B-106
	#2	**B-1336**	4	150	B-106
	#4	**B-5340**	4	150	B-106
	#6	**B-5684**	4	90	B-106
	#6 Sol	**B-6552**	4	90	B-106
	#8	**B-5686**	4	90	B-106
	#8 Sol	**B-5688**	4	90	B-106

Blue highlighted items are industry standard and most frequently ordered.

TYPE BCR-1 MOLDS

Horizontal Cable Terminal to Ground Rod

Type BCR-1 Molds are used to terminate horizontal copper cable at the top of a vertical ground rod. Size range is #6 through 1000 kcmil solid or concentric stranded copper conductors; 1/2" through 1" for the ground rod. Contact BURNDY® for information on molds for conductors not listed below.

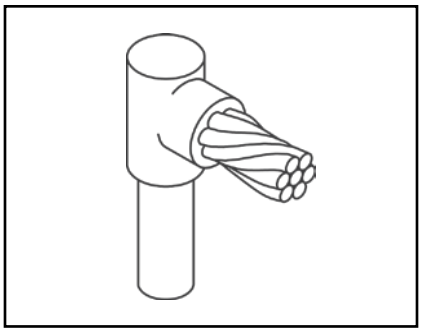

NOTES:
- For sizes not listed, contact BURNDY®
- Molds listed are for concentric stranded cable; add suffix "-S" to mold number for solid conductors
- For heavy duty molds, molds with wear plates or molds for Copperweld® cable, contact BURNDY®
- For expedited service, contact BURNDY®

Required Tools:
Handle Clamps - see chart for correct handle catalog number

Recommended Accessories:
B38-0309-00 Flint Ignitor; **B38-3922-00** Mold Cleaning Brush; **B38-0135-00** Cable Cleaning Brush; **B38-0330-00** Cable Clamp

Cable		Mold Number	Price Key	Weld Metal	Handle Clamps
Grd Rod	Tap				
1/2"	#6	**B-8402**	18 ①	25	Incl.
	#4	**B-8403**	18 ①	25	Incl.
	#2	**B-495**	4	65	B-106
	#1	**B-496**	4	65	B-106
	1/0	**B-497**	4	90	B-106
	2/0	**B-498**	4	90	B-106
	3/0	**B-499**	4	90	B-106
	4/0	**B-500**	4	90	B-106
	250 kcmil	**B-501**	4	90	B-106
	300 kcmil	**B-502**	4	90	B-106
5/8"	#6	**B-8414**	18 ①	32	Incl.
	#4	**B-8415**	18 ①	32	Incl.
	#2	**B-503**	4	65	B-106
	#1	**B-504**	4	65	B-106
	1/0	**B-505**	4	90	B-106
	2/0	**B-506**	4	90	B-106
	3/0	**B-507**	4	90	B-106
	4/0	**B-508**	4	90	B-106
	250 kcmil	**B-509**	4	90	B-106
	300 kcmil	**B-510**	4	115	B-106
	350 kcmil	**B-511**	4	115	B-106
	500 kcmil	**B-513**	4	150	B-106

① B38-0309-00 Flint ignitor included

Cable		Mold Number	Price Key	Weld Metal	Handle Clamps
Grd Rod	Tap				
3/4"	#6	**B-8422**	18 ①	32	Incl.
	#4	**B-8426**	19 ①	45	Incl.
	#2	**B-5781**	4	90	B-106
	#1	**B-514**	4	90	B-106
	1/0	**B-515**	4	90	B-106
	2/0	**B-516**	4	90	B-106
	3/0	**B-517**	4	90	B-106
	4/0	**B-518**	4	90	B-106
	250 kcmil	**B-519**	4	90	B-106
	300 kcmil	**B-520**	4	115	B-106
	350 kcmil	**B-521**	4	115	B-106
	500 kcmil	**B-523**	4	150	B-106
	750 kcmil	**B-524**	4	250	B-106
1"	1/0	**B-525**	4	150	B-106
	2/0	**B-526**	4	150	B-106
	3/0	**B-527**	4	150	B-106
	4/0	**B-528**	4	150	B-106
	250 kcmil	**B-529**	4	150	B-106
	300 kcmil	**B-530**	4	200	B-106
	350 kcmil	**B-531**	4	200	B-106
	500 kcmil	**B-533**	4	200	B-106
	750 kcmil	**B-534**	4	250	B-106
	1000 kcmil	**B-535**	5	2-150	B-106

TYPE BCR-2 MOLDS

Horizontal Cable to Ground Rod

Type BCR-2 Molds are used to join horizontal through copper cable to the top of a vertical ground rod. Size range is #6 through 1000 kcmil solid or concentric stranded copper conductors; 1/2" through 1" for the ground rod. Contact BURNDY® for information on molds for conductors not listed below.

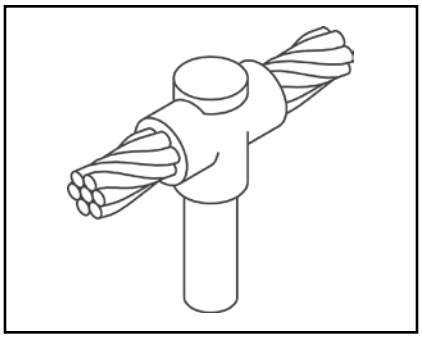

NOTES:
- For sizes not listed, contact BURNDY®
- Molds listed are for concentric stranded cable; add suffix "-S" to mold number for solid conductors
- For heavy duty molds, molds with wear plates or molds for Copperweld® cable, contact BURNDY®
- For expedited service, contact BURNDY®

Required Tools:
Handle Clamps - see chart for correct handle catalog number

Recommended Accessories:
B38-0309-00 Flint Ignitor; **B38-3922-00** Mold Cleaning Brush; **B38-0135-00** Cable Cleaning Brush; **B38-0330-00** Cable Clamp

Cable		Mold Number	Price Key	Weld Metal	Handle Clamps
Grd Rod	Tap				
1/2"	#6	**B-8434**	18 ①	32	Incl.
	#4	**B-8435**	18 ①	32	Incl.
	#2	**B-537**	4	90	B-106
	#1	**B-538**	4	90	B-106
	1/0	**B-539**	4	90	B-106
	2/0	**B-540**	4	90	B-106
	3/0	**B-541**	4	115	B-106
	4/0	**B-542**	4	115	B-106
	250 kcmil	**B-543**	4	150	B-106
	300 kcmil	**B-544**	4	200	B-106
5/8"	#6	**B-8441**	18 ①	32	Incl.
	#4	**B-8442**	18 ①	32	Incl.
	#2	**B-545**	4	90	B-106
	#1	**B-546**	4	90	B-106
	1/0	**B-547**	4	90	B-106
	2/0	**B-548**	4	115	B-106
	3/0	**B-549**	4	115	B-106
	4/0	**B-550**	4	115	B-106
	250 kcmil	**B-551**	4	150	B-106
	300 kcmil	**B-552**	4	200	B-106
	350 kcmil	**B-553**	4	200	B-106
	500 kcmil	**B-555**	4	250	B-106

① B38-0309-00 Flint ignitor included

Cable		Mold Number	Price Key	Weld Metal	Handle Clamps
Grd Rod	Tap				
3/4"	#6	**B-8452**	19 ①	45	Incl.
	#4	**B-8454**	19 ①	65	Incl.
	#2	**B-556**	4	90	B-106
	#1	**B-557**	4	90	B-106
	1/0	**B-558**	4	115	B-106
	2/0	**B-559**	4	115	B-106
	3/0	**B-560**	4	115	B-106
	4/0	**B-561**	4	115	B-106
	250 kcmil	**B-562**	4	150	B-106
	300 kcmil	**B-563**	4	200	B-106
	350 kcmil	**B-564**	4	200	B-106
	500 kcmil	**B-566**	4	250	B-106
	750 kcmil	**B-567**	5	2-200	B-107
1"	1/0	**B-569**	4	150	B-106
	2/0	**B-570**	4	150	B-106
	3/0	**B-571**	4	150	B-106
	4/0	**B-572**	4	150	B-106
	250 kcmil	**B-573**	4	200	B-106
	300 kcmil	**B-574**	4	200	B-106
	350 kcmil	**B-575**	4	200	B-106
	500 kcmil	**B-577**	4	250	B-106
	750 kcmil	**B-578**	5	2-200	B-107
	1000 kcmil	**B-579**	5	500	B-107

TYPE BCR-3 MOLDS

Horizontal Through Cable to Ground Rod

Type BCR-3 Molds are used to join horizontal through run cable to the side of a vertical ground rod. Size range is #6 through 1000 kcmil solid or concentric stranded copper conductors; 1/2" through 1" for the ground rod. Contact BURNDY® for information on molds for conductors not listed below.

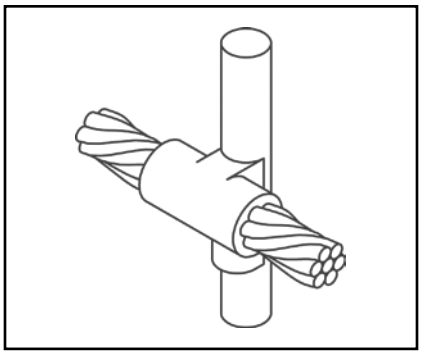

NOTES:
- For sizes not listed, contact BURNDY®
- Molds listed are for concentric stranded cable; add suffix "-S" to mold number for solid conductors
- For heavy duty molds, molds with wear plates or molds for Copperweld® cable, contact BURNDY®
- For expedited service, contact BURNDY®

Required Tools:
Handle Clamps - see chart for correct handle catalog number

Recommended Accessories:
B38-0309-00 Flint Ignitor; **B38-3922-00** Mold Cleaning Brush; **B38-0135-00** Cable Cleaning Brush; **B38-0330-00** Cable Clamp

Cable		Mold Number	Price Key	Weld Metal	Handle Clamps
Grd Rod	Tap				
1/2"	#6	**B-5321**	24	65	B-106
	#4	**B2154**	24	90	B-106
	#2	**B-2155**	24	90	B-106
	#1	**B-2156**	24	115	B-106
	1/0	**B-1581**	24	115	B-106
	2/0	**B-1582**	24	115	B-106
	4/0	**B-1583**	24	150	B-106
	250 kcmil	**B-1584**	24	150	B-106
5/8"	#6	**B-5660**	24	65	B-106
	#4	**B-2157**	24	90	B-106
	#2	**B-2158**	24	90	B-106
	#1	**B-2159**	24	115	B-106
	1/0	**B-1586**	24	115	B-106
	2/0	**B-1587**	24	115	B-106
	4/0	**B-1588**	24	150	B-106
	250 kcmil	**B-1589**	24	150	B-106
	500 kcmil	**B-1593**	13	2-200	B-107

Cable		Mold Number	Price Key	Weld Metal	Handle Clamps
Grd Rod	Tap				
3/4"	#6	**B-6630**	24	65	B-106
	#4	**B-2160**	24	90	B-106
	#2	**B-2161**	24	90	B-106
	#1	**B-2162**	24	115	B-106
	1/0	**B-1594**	24	115	B-106
	2/0	**B-1595**	24	115	B-106
	4/0	**B-1596**	24	150	B-106
	250 kcmil	**B-1597**	24	200	B-106
	500 kcmil	**B-1601**	13	500	B-107
	750 kcmil	**B-1602**	13	3-250	B-107
1"	#6	**B-6906**	24	90	B-106
	#4	**B-2163**	24	90	B-106
	#2	**B-2164**	24	90	B-106
	#1	**B-2165**	24	115	B-106
	1/0	**B-1603**	24	115	B-106
	2/0	**B-1604**	24	115	B-106
	4/0	**B-1605**	24	150	B-106
	250 kcmil	**B-1606**	24	200	B-106
	500 kcmil	**B-1610**	13	500	B-107
	750 kcmil	**B-1611**	13	3-250	B-107

Blue highlighted items are industry standard and most frequently ordered.

TYPE BCR-17 MOLDS

Horizontal Run and Tap Cables to Ground Rod

Type BCR-17 Molds are used to join horizontal run and tap cables to the top of a vertical ground rod. Size range is #4 through 750 kcmil solid or concentric stranded copper conductors; 1/2" through 1" for the ground rod. Contact BURNDY® for information on molds for conductors not listed below.

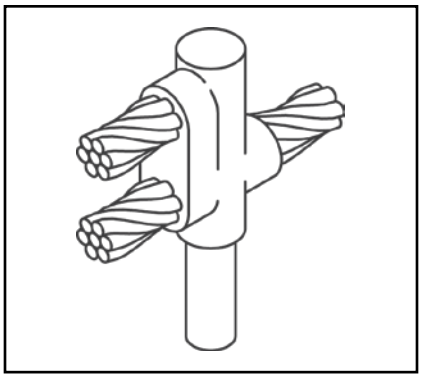

NOTES:
- For sizes not listed, contact BURNDY®
- Molds listed are for concentric stranded cable; add suffix "-S" to mold number for solid conductors
- For heavy duty molds, molds with wear plates or molds for Copperweld® cable, contact BURNDY®
- For expedited service, contact BURNDY®

Required Tools:
Handle Clamps - see chart for correct handle catalog number

Recommended Accessories:
B38-0309-00 Flint Ignitor; **B38-3922-00** Mold Cleaning Brush; **B38-0135-00** Cable Cleaning Brush; **B38-0330-00** Cable Clamp

Cable		Mold Number	Price Key	Weld Metal	Handle Clamps
Grd Rod	Tap				
1/2"	#4	**B-5416**	4	90	B-106
	#2	**B-6165**	4	90	B-106
	#1	**B-5830**	4	90	B-106
	1/0	**B-5940**	4	115	B-106
	2/0	**B-5850**	4	150	B-106
	3/0	**B-5833**	4	200	B-106
	4/0	**B-5380**	4	200	B-106
5/8"	#4	**B-5972**	4	90	B-106
	#2	**B-5935**	4	115	B-106
	#1	**B-5699**	4	115	B-106
	1/0	**B-5746**	4	150	B-106
	2/0	**B-5963**	4	200	B-106
	3/0	**B-5734**	4	250	B-106
	4/0	**B-5732**	4	250	B-106
	250 kcmil	**B-5722**	5	2-150	B-107
3/4"	#4	**B-5698**	4	90	B-106
	#2	**B-5294**	4	115	B-106
	#1	**B-5390**	4	115	B-106
	1/0	**B-6025**	4	150	B-106
	2/0	**B-5738**	4	200	B-106
	3/0	**B-6003**	4	250	B-106
	4/0	**B-2566**	4	250	B-106
	250 kcmil	**B-5904**	5	2-150	B-107
	300 kcmil	**B-5857**	5	2-200	B-107
	350 kcmil	**B-5777**	5	2-200	B-107
	500 kcmil	**B-5961**	5	3-200	B-107

Cable		Mold Number	Price Key	Weld Metal	Handle Clamps
Grd Rod	Tap				
1"	#4	**B-5556**	4	115	B-106
	#2	**B-5555**	4	150	B-106
	#1	**B-6048**	4	150	B-106
	1/0	**B-5992**	4	200	B-106
	2/0	**B-5877**	4	250	B-106
	3/0	**B-5821**	5	2-150	B-107
	4/0	**B-5820**	5	2-150	B-107
	250 kcmil	**B-5807**	5	2-200	B-107
	300 kcmil	**B-5803**	5	500	B-107
	350 kcmil	**B-5561**	5	500	B-107
	500 kcmil	**B-5515**	6	3-250	B-107
	750 kcmil	**B-5513**	6	2-500	B-107

Blue highlighted items are industry standard and most frequently ordered.

TYPE BCR-24 MOLDS

Horizontal Parallel Run Cables to Ground Rod

Type BCR-24 Molds are used to join horizontal parallel cables to the top of a vertical ground rod. Size range is #4 through 750 kcmil solid or concentric stranded copper conductors; 1/2" through 1" for the ground rod. Contact BURNDY® for information on molds for conductors not listed below.

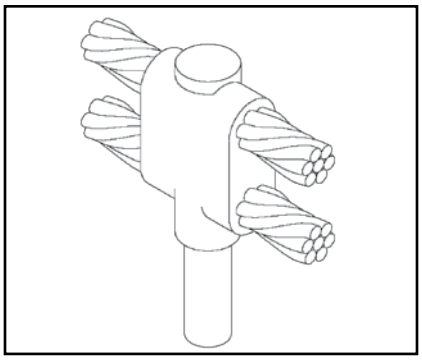

NOTES:
- For sizes not listed, contact BURNDY®
- Molds listed are for concentric stranded cable; add suffix "-S" to mold number for solid conductors
- For heavy duty molds, molds with wear plates or molds for Copperweld® cable, contact BURNDY®
- For expedited service, contact BURNDY®

Required Tools:
Handle Clamps - see chart for correct handle catalog number

Recommended Accessories:
B38-0309-00 Flint Ignitor; **B38-3922-00** Mold Cleaning Brush; **B38-0135-00** Cable Cleaning Brush; **B38-0330-00** Cable Clamp

Cable		Mold Number	Price Key	Weld Metal	Handle Clamps
Grd Rod Size	Tap				
1/2"	#4	**B-5640**	4	115	B-106
	#2	**B-5667**	4	115	B-106
	#1	**B-6002**	4	115	B-106
	1/0	**B-5767**	4	150	B-106
	2/0	**B-5604**	4	200	B-106
	3/0	**B-5560**	4	250	B-106
	4/0	**B-6766**	4	250	B-106
5/8"	#4	**B-6208**	4	115	B-106
	#2	**B-5702**	4	150	B-106
	#1	**B-5517**	4	150	B-106
	1/0	**B-5573**	4	200	B-106
	2/0	**B-8451**	4	250	B-106
	3/0	**B-2510**	5	2-150	B-107
	4/0	**B-5428**	5	2-150	B-107
	250 kcmil	**B-1212**	5	2-200	B-107
	300 kcmil	**B-2084**	5	500	B-107
	350 kcmil	**B-2558**	5	500	B-107
	500 kcmil	**B-2450**	5	3-250	B-107
3/4"	#4	**B-8011**	4	115	B-106
	#2	**B-2320**	4	150	B-106
	#1	**B-2235**	4	150	B-106
	1/0	**B-6051**	4	200	B-106
	2/0	**B-8802**	4	250	B-106
	3/0	**B-8726**	5	2-150	B-107
	4/0	**B-5677**	5	2-150	B-107
	250 kcmil	**B-8461**	5	2-200	B-107
	300 kcmil	**B-8428**	5	500	B-107
	350 kcmil	**B-8294**	5	500	B-107
	500 kcmil	**B-8214**	5	3-250	B-107
	750 kcmil	**B-8027**	6	2-500	B-107

Cable		Mold Number	Price Key	Weld Metal	Handle Clamps
Grd Rod Size	Tap				
1"	#4	**B-5330**	4	150	B-106
	#2	**B-5332**	4	200	B-106
	#1	**B-5333**	4	200	B-106
	1/0	**B-5334**	4	250	B-106
	2/0	**B-5335**	5	2-150	B-107
	3/0	**B-5336**	5	2-200	B-107
	4/0	**B-5337**	5	2-200	B-107
	250 kcmil	**B-5338**	5	500	B-107
	300 kcmil	**B-5341**	5	3-200	B-107
	350 kcmil	**B-5351**	5	3-200	B-107
	500 kcmil	**B-5352**	6	2-500	B-107
	750 kcmil	**B-5353**	64	5-250	B-107

Blue highlighted items are industry standard and most frequently ordered.

SINGLE SHOT MOLDS

RUS Accepted

BURNDYWeld® Single Shot Molds are an economical way to make cable connections onto the top of a ground rod. The Single Shot is a disposable single use ceramic mold that comes complete with everything required except the Flint Ignitor.

* UL Listed

Ground Rod Size	Cable Size		Mold Number	Type
	Solid	Stranded		
1/2"	#6, #8	#8	**BS-2009**	BCR-1•
	#3, #4	#4, #6	**BS-2010**	BCR-1•
	#1, #2	#2, #3	**BS-2011**	BCR-1•
	#6, #8	#8	**BS-2024**	BCR-2•
	#3, #4	#4, #6	**BS-2025**	BCR-2•
	#1, #2	#2, #3	**BS-2026**	BCR-1•
5/8"	#6, #8	#8	**BS-2012**	BCR-1•
	#3, #4	#4, #6	**BS-2013**	BCR-1•
	#1, #2	#2, #3	**BS-2014**	BCR-1•
	2/0, 1/0	1/0, #1	**BS-2015**	BCR-1•
	—	2/0	**BS-2016**	BCR-1•
	#6, #8	#8	**BS-2027**	BCR-2•
	#3, #4	#4, #6	**BS-2028**	BCR-2•
	#1, #2	#2, #3	**BS-2029**	BCR-2•
	2/0, 1/0	1/0, #1	**BS-2030**	BCR-2•
	#6, #8	#8	**BS-2105**	BCR-24
	#3, #4	#4, #6	**BS-2106**	BCR-14
	#1, #2	#2, #3	**BS-2107**	BCR-24
	#6, #8	#8	**BS-2006**	BCR-25
	#3, #4	#4, #6	**BS-2007**	BCR-25
	#1, #2	#2, #3	**BS-2008**	BCR-25
3/4"	#6, #8	#8	**BS-2017**	BCR-1
	#3, #4	#4, #6	**BS-2018**	BCR-1•
	#1, #2	#2, #3	**BS-2019**	BCR-1•
	2/0, 1/0	1/0, #1	**BS-2020**	BCR-1•
	—	2/0	**BS-2021**	BCR-1•
	#6, #8	#8	**BS-2031**	BCR-2•
	#3, #4	#4, #6	**BS-2032**	BCR-2•
	#1, #2	#2, #3	**BS-2033**	BCR-2•
	2/0, 1/0	1/0, #1	**BS-2034**	BCR-2•
	#6, #8	#8	**BS-2108**	BCR-24
	#3, #4	#4, #6	**BS-2109**	BCR-24
	#1, #2	#2, #3	**BS-2110**	BCR-24
	#6, #8	#8	**BS-2068**	BCR-25•
	#3, #4	#4, #6	**BS-2069**	BCR-25•
	#1, #2	#2, #3	**BS-2070**	BCR-25•

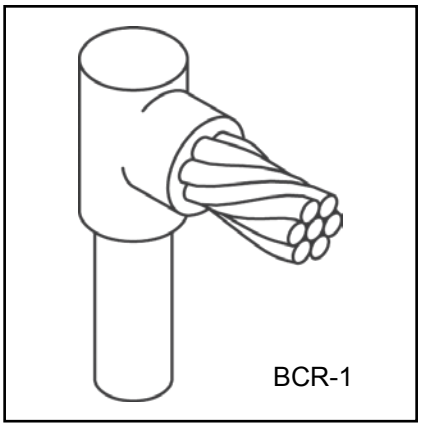
BCR-1

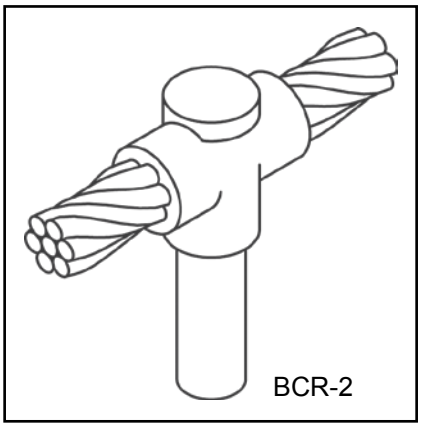
BCR-2

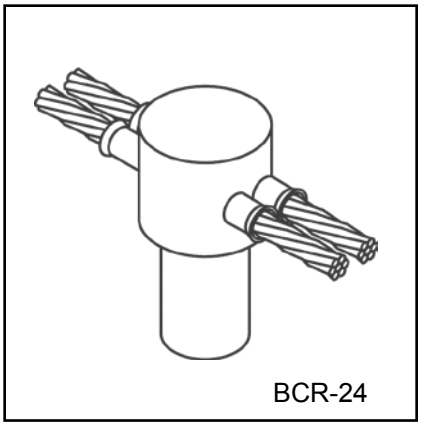
BCR-24

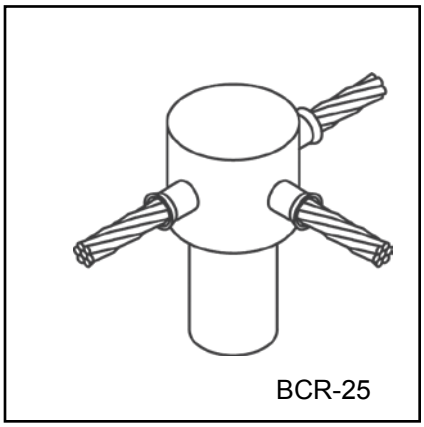
BCR-25

Blue highlighted items are industry standard and most frequently ordered.

TYPE BCS-1 MOLDS

Horizontal Cable to Horizontal Steel Surface

Type BCS-1 Molds are used to terminate a horizontal copper cable to any horizontal steel surface. Note that the cable is OFF the surface. Size range is 1/0 through 1000 kcmil solid or concentric stranded copper conductors. Contact BURNDY® for information on molds for conductors not listed below.

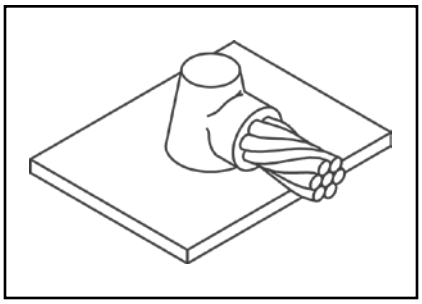

NOTES:
- For sizes not listed, contact BURNDY®
- Molds listed are for concentric stranded cable; add suffix "-S" to mold number for solid conductors
- For heavy duty molds, molds with wear plates or molds for Copperweld® cable, contact BURNDY®
- For expedited service, contact BURNDY®

Required Tools:
Handle Clamps - see chart for correct handle catalog number

Recommended Accessories:
B38-0309-00 Flint Ignitor; **B38-3922-00** Mold Cleaning Brush; **B38-0135-00** Cable Cleaning Brush; **B38-0330-00** Cable Clamp

Cable Size	Mold Number	Price Key	Weld Metal	Handle Clamps
1/0	**B-644**	4	90	B-106
2/0	**B-645**	4	90	B-106
3/0	**B-646**	4	115	B-106
4/0	**B-647**	4	115	B-106
250 kcmil	**B-648**	4	115	B-106
300 kcmil	**B-649**	4	150	B-106
350 kcmil	**B-650**	4	200	B-106
500 kcmil	**B-652**	4	200	B-106
750 kcmil	**B-653**	5	2-150	B-106
1000 kcmil	**B-654**	5	2-200	B-107

TYPE BCS-8 MOLDS

Horizontal Cable to Horizontal Steel Surface

Type BCS-8 Molds are used to terminate a horizontal copper cable to any horizontal steel surface. Note that the cable is ON the surface. Size range is #6 through 1000 kcmil solid or concentric stranded copper conductors. Contact BURNDY® for information on molds for conductors not listed below.

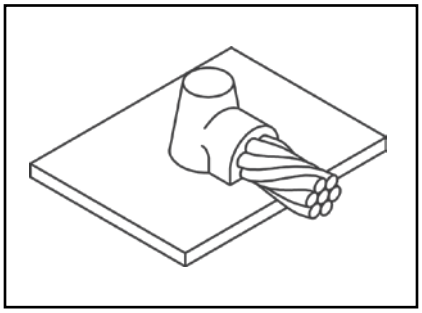

NOTES:
- For sizes not listed, contact BURNDY®
- Molds listed are for concentric stranded cable; add suffix "-S" to mold number for solid conductors
- For heavy duty molds, molds with wear plates or molds for Copperweld® cable, contact BURNDY®
- For expedited service, contact BURNDY®

Required Tools:
Handle Clamps - see chart for correct handle catalog number

Recommended Accessories:
B38-0309-00 Flint Ignitor; **B38-3922-00** Mold Cleaning Brush; **B38-0135-00** Cable Cleaning Brush; **B38-0330-00** Cable Clamp

① **B38-0309-00** Flint ignitor included

Cable Size	Mold Number	Price Key	Weld Metal	Handle Clamps
#6	**B-628**	3 ①	45	Incl.
#4	**B-629**	3 ①	45	Incl.
#2	**B-630**	3 ①	45	Incl.
#1	**B-631**	3 ①	65	Incl.
1/0	**B-7146**	4	90	B-106
2/0	**B-7075**	4	90	B-106
3/0	**B-2199**	4	115	B-106
4/0	**B-6114**	4	115	B-106
250 kcmil	**B-2200**	4	115	B-106
300 kcmil	**B-2506**	4	150	B-106
350 kcmil	**B-2507**	4	200	B-106
500 kcmil	**B-2509**	4	200	B-106
750 kcmil	**B-2542**	5	2-150	B-107
1000 kcmil	**B-2511**	5	2-200	B-107

Blue highlighted items are industry standard and most frequently ordered.

TYPE BCS-2 MOLDS

Horizontal Through Cable to Horizontal Steel Surface

Type BCS-2 Molds are used to join horizontal through copper cable to any horizontal steel surface. Note the cable is OFF the surface. Size range is 1/0 through 1000 kcmil solid or concentric stranded copper conductors. Contact BURNDY® for information on molds for conductors not listed below.

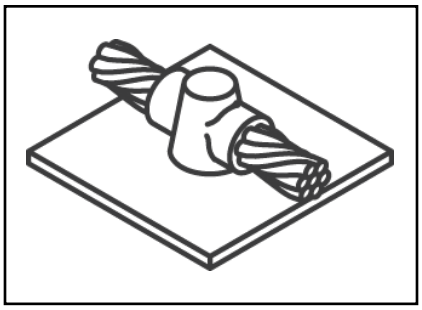

NOTES:
- For sizes not listed, contact BURNDY®
- Molds listed are for concentric stranded cable; add suffix "-S" to mold number for solid conductors
- For heavy duty molds, molds with wear plates or molds for Copperweld® cable, contact BURNDY®
- For expedited service, contact BURNDY®

Required Tools:
Handle Clamps - see chart for correct handle catalog number

Recommended Accessories:
B38-0309-00 Flint Ignitor; **B38-3922-00** Mold Cleaning Brush; **B38-0135-00** Cable Cleaning Brush; **B38-0330-00** Cable Clamp

Cable Size	Mold Number	Price Key	Weld Metal	Handle Clamps
1/0	**B-616**	4	90	B-106
2/0	**B-617**	4	115	B-106
3/0	**B-618**	4	115	B-106
4/0	**B-619**	4	150	B-106
250 kcmil	**B-620**	4	150	B-106
300 kcmil	**B-621**	4	200	B-106
350 kcmil	**B-622**	4	250	B-106
500 kcmil	**B-624**	5	2-150	B-107
750 kcmil	**B-625-H**	5	3-250	B-107
1000 kcmil	**B-626-H**	5	2-500	B-107

TYPE BCS-9 MOLDS

Horizontal Through Cable to Horizontal Steel Surface

Type BCS-9 Molds are used to join horizontal through copper cable to any horizontal steel surface. Note the cable is ON the surface. Size range is #6 through 500 kcmil solid or concentric stranded copper conductors. Contact BURNDY® Products for information on molds for conductors not listed below.

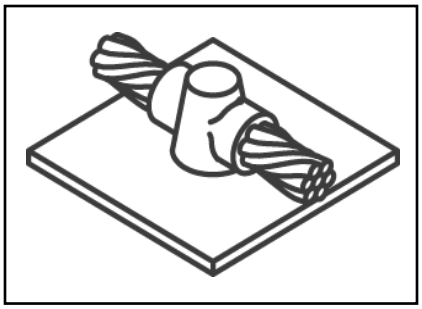

NOTES:
- For sizes not listed, contact BURNDY®
- Molds listed are for concentric stranded cable; add suffix "-S" to mold number for solid conductors
- For heavy duty molds, molds with wear plates or molds for Copperweld® cable, contact BURNDY®
- For expedited service, contact BURNDY®

Required Tools:
Handle Clamps - see chart for correct handle catalog number

Recommended Accessories:
B38-0309-00 Flint Ignitor; **B38-3922-00** Mold Cleaning Brush; **B38-0135-00** Cable Cleaning Brush; **B38-0330-00** Cable Clamp

① **B38-0309-00** Flint ignitor included

Cable Size	Mold Number	Price Key	Weld Metal	Handle Clamps
#6	**B-602**	3 ①	45	Incl.
#4	**B-603**	3 ①	45	Incl.
#2	**B-604**	3 ①	45	Incl.
#1	**B-605**	3 ①	65	Incl.
1/0	**B-8379**	4	90	B-106
2/0	**B-5331**	4	115	B-106
3/0	**B-8381**	4	115	B-106
4/0	**B-7192**	4	150	B-106
250 kcmil	**B-8413**	4	150	B-106
300 kcmil	**B-8423**	4	200	B-106
350 kcmil	**B-8410**	4	250	B-106
500 kcmil	**B-5065**	5	2-150	B-107

Blue highlighted items are industry standard and most frequently ordered.

TYPE BCS-3 MOLDS

Angular Cable Drop to Vertical Steel Surface

Type BCS-3 Molds are used to join the end of a copper cable at a 45° angle to a vertical steel surface. Size range is #6 through 1000 kcmil solid or concentric stranded copper conductors. Contact BURNDY® for information on molds for conductors not listed below.

Cable to Flat Steel

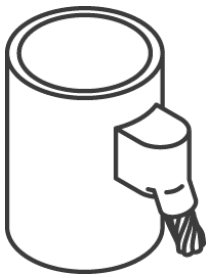

Cable to Pipe

Cable Size	Pipe Size	Mold Number	Price Key	Weld Metal	Handle Clamps
#6	Flat Steel Only	**B-585**	4	45	B-106
#4	12" & up	**B-586**①	4	45	B-106
#3	Flat Steel Only	**B-587**	4	45	B-106
#2	12" & up	**B-588**①	4	45	B-106
#1	12" & up	**B-589**①	4	65	B-106
1/0	12" & up	**B-590**①	4	90	B-106
2/0	12" & up	**B-591**①	4	90	B-106
3/0	12" & up	**B-592**①	4	115	B-106
4/0	12" & up	**B-593**①	4	115	B-106
250 kcmil	Flat Steel Only	**B-594**	4	115	B-106
300 kcmil	Flat Steel Only	**B-595**	4	150	B-106
350 kcmil	Flat Steel Only	**B-596**	4	200	B-106
500 kcmil	Flat Steel Only	**B-598**	4	200	B-106
750 kcmil	Flat Steel Only	**B-599**	5	2-150	B-106
1000 kcmil	Flat Steel Only	**B-600**	5	2-200	B-106
#4	1-1/4" to 4"	**B-2476**	4	45	B-106
#4	4" to 6"	**B-2477**	4	45	B-106
#4	6" to 10"	**B-2478**	4	45	B-106
#2 Sol	1-1/4" to 4"	**B-9233-S**	4	45	B-106
#2 Sol	4" to 6"	**B-2480-S**	4	45	B-106
#2 Sol	6" to 10"	**B-2583-S**	4	45	B-106
#2 Sol	12" & up	**B-588-S**①	4	45	B-106
#2	1-1/4" to 4"	**B-9233**	4	45	B-106
#2	4" to 6"	**B-2480**	4	45	B-106
#2	6" to 10"	**B-2583**	4	45	B-106
#1	1-1/4" to 4"	**B-2482**	4	65	B-106
#1	4" to 6"	**B-2483**	4	65	B-106
#1	6" to 10"	**B-2484**	4	65	B-106
1/0	1-1/4" to 4"	**B-2486**	4	90	B-106
1/0	4" to 6"	**B-2487**	4	90	B-106
1/0	6" to 10"	**B-2488**	4	90	B-106

Cable Size	Pipe Size	Mold Number	Price Key	Weld Metal	Handle Clamps
2/0	1-1/4" to 4"	**B-8833**	4	90	B-106
2/0	4" to 6"	**B-2490**	4	90	B-106
2/0	6" to 10"	**B-2491**	4	90	B-106
3/0	1-1/4" to 4"	**B-2493**	4	115	B-106
3/0	4" to 6"	**B-2494**	4	115	B-106
3/0	6" to 10"	**B-2495**	4	115	B-106
4/0	1-1/4" to 4"	**B-9021**	4	115	B-106
4/0	4" to 6"	**B-2497**	4	115	B-106
4/0	6" to 10"	**B-2498**	4	115	B-106

① Flat Surface Mold; These items can be used to Flat Steel or to Pipe

NOTES:

- For sizes not listed, contact BURNDY®
- Molds listed are for concentric stranded cable; add suffix "-S" to mold number for solid conductors
- For heavy duty molds, molds with wear plates or molds for Copperweld® cable, contact BURNDY®
- For expedited service, contact BURNDY®

Required Tools:
Handle Clamps - see chart for correct handle catalog number

Recommended Accessories:
B38-0309-00 Flint Ignitor
B38-3922-00 Mold Cleaning Brush
B38-0135-00 Cable Cleaning Brush
B38-0330-00 Cable Clamp

Blue highlighted items are industry standard and most frequently ordered.

TYPE BCS-23 MOLDS

Vertical Cable Drop to Vertical Steel Surface

Type BCS-23 Molds are used to join vertical cable down to a vertical steel surface. Note that the cable is OFF the surface. Size range is #6 through 500 kcmil solid or concentric stranded copper conductors. Contact BURNDY® for information on molds for conductors not listed below.

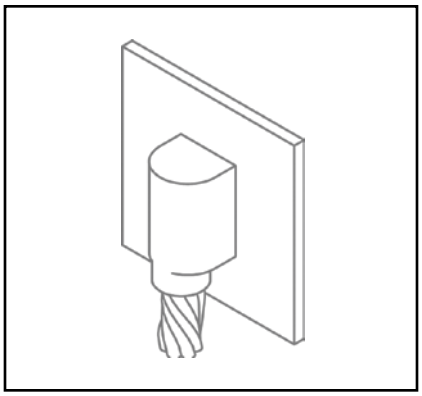

NOTES:
- For sizes not listed, contact BURNDY®
- Molds listed are for concentric stranded cable; add suffix "-S" to mold number for solid conductors
- For heavy duty molds, molds with wear plates or molds for Copperweld® cable, contact BURNDY®
- For expedited service, contact BURNDY®

Required Tools:
Handle Clamps - see chart for correct handle catalog number

Recommended Accessories:
B38-0309-00 Flint Ignitor; **B38-3922-00** Mold Cleaning Brush; **B38-0135-00** Cable Cleaning Brush; **B38-0330-00** Cable Clamp

Cable Size	Mold Number	Price Key	Weld Metal	Handle Clamps
#6	**B-5389**	4	45	B-106
#4	**B-5359**	4	65	B-106
#2	**B-2781**	4	65	B-106
#1	**B-5361**	4	90	B-106
1/0	**B-2189**	4	115	B-106
2/0	**B-2540**	4	115	B-106
3/0	**B-5362**	4	150	B-106
4/0	**B-8718**	4	150	B-106
250 kcmil	**B-8165**	4	200	B-106
300 kcmil	**B-5363**	4	200	B-106
350 kcmil	**B-9029**	4	250	B-106
500 kcmil	**B-8512**	17	2-150	B-106

TYPE BCS-4 MOLDS

Vertical Through Cable to Vertical Steel Surface

Type BCS-4 Molds are used to join a vertical through copper cable to a vertical steel surface. Note that the cable is OFF the surface. For molds with the cable on the surface, contact BURNDY®. Size range is #6 through 500 kcmil solid or concentric stranded copper conductors. Contact BURNDY® for information on molds for conductors not listed.

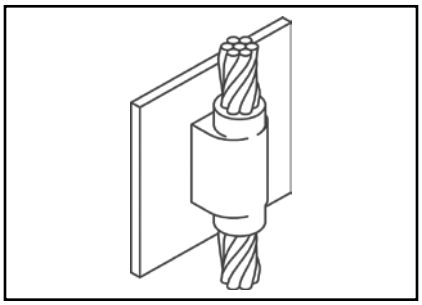

NOTES:
- For sizes not listed, contact BURNDY®
- Molds listed are for concentric stranded cable; add suffix "-S" to mold number for solid conductors
- For heavy duty molds, molds with wear plates or molds for Copperweld® cable, contact BURNDY®
- For expedited service, contact BURNDY®

Required Tools:
Handle Clamps - see chart for correct handle catalog number

Recommended Accessories:
B38-0309-00 Flint Ignitor; **B38-3922-00** Mold Cleaning Brush; **B38-0135-00** Cable Cleaning Brush; **B38-0330-00** Cable Clamp

Cable Size	Mold Number	Price Key	Weld Metal	Handle Clamps
#6	**B-1215**	4	90	B-106
#4	**B-1216**	4	90	B-106
#2	**B-1218**	4	115	B-106
#1	**B-1219**	4	115	B-106
1/0	**B-1220**	17	200	B-106
2/0	**B-1221**	17	200	B-106
3/0	**B-1222**	17	250	B-106
4/0	**B-1223**	17	250	B-106
250 kcmil	**B-1224**	17	250	B-106
300 kcmil	**B-1225-H**	6	500	B-107
350 kcmil	**B-1226-H**	6	3-200	B-107
500 kcmil	**B-1228-H**	6	3-250	B-107

Blue highlighted items are industry standard and most frequently ordered.

TYPE BCS-6 MOLDS

Horizontal Through Cable to Vertical Steel Surface

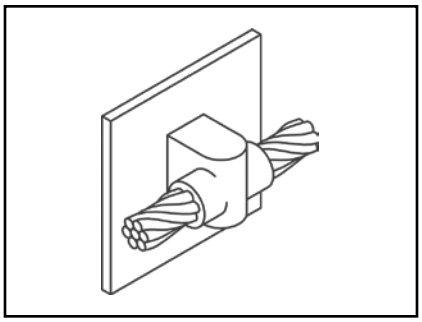

Type BCS-6 Molds are used to join horizontal through copper cable to a vertical steel surface. Note that the cable is OFF the surface. Size range is #6 through 250 kcmil solid or concentric stranded copper conductors. Contact BURNDY® for information on molds for conductors not listed below.

Cable Size	Mold Number	Price Key	Weld Metal	Handle Clamps
#6	**B-1626**	4	65	B-106
#4	**B-1627**	4	65	B-106
#2	**B-1628**	4	65	B-106
#1	**B-1629**	4	90	B-106
1/0	**B-1630**	4	115	B-106
2/0	**B-1631**	4	115	B-106
3/0	**B-1632**	4	150	B-106
4/0	**B-1633**	4	150	B-106
250 kcmil	**B-1634**	4	150	B-106

NOTES:
- For sizes not listed, contact BURNDY®
- Molds listed are for concentric stranded cable; add suffix "-S" to mold number for solid conductors
- For heavy duty molds, molds with wear plates or molds for Copperweld® cable, contact BURNDY®
- For expedited service, contact BURNDY®

Required Tools:
Handle Clamps - see chart for correct handle catalog number

Recommended Accessories:
B38-0309-00 Flint Ignitor
B38-3922-00 Mold Cleaning Brush
B38-0135-00 Cable Cleaning Brush
B38-0330-00 Cable Clamp

TYPE BCS-7 MOLDS

Overhead Vertical Tap Cable to Vertical Steel Surface

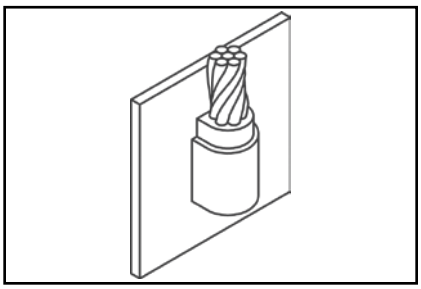

Type BCS-7 Molds are used to join an overhead vertical copper conductor drop tap to a vertical steel surface. Size range is #6 through 1000 kcmil solid or concentric stranded copper conductors. Contact BURNDY® for information on molds for conductors not listed.

NOTES:
- For sizes not listed, contact BURNDY®
- Molds listed are for concentric stranded cable; add suffix "-S" to mold number for solid conductors
- For heavy duty molds, molds with wear plates or molds for Copperweld® cable, contact BURNDY®
- For expedited service, contact BURNDY®

Required Tools:
Handle Clamps - see chart for correct handle catalog number

Recommended Accessories:
B38-0309-00 Flint Ignitor
B38-3922-00 Mold Cleaning Brush
B38-0135-00 Cable Cleaning Brush
B38-0330-00 Cable Clamp

Cable Size	Mold Number	Price Key	Weld Metal	Handle Clamps
#6	**B-1635**	4	65	B-106
#4	**B-1636**	4	65	B-106
#3	**B-1637**	4	65	B-106
#2	**B-1638**	4	65	B-106
#1	**B-1639**	4	90	B-106
1/0	**B-1640**	4	150	B-106
2/0	**B-1641**	4	150	B-106
3/0	**B-1642**	17	200	B-106
4/0	**B1643**	17	200	B-106
250 kcmil	**B-1644**	17	200	B-106
300 kcmil	**B-1645**	17	250	B-106
350 kcmil	**B-1646**	6	2-150	B-107
500 kcmil	**B-1648**	6	2-200	B-107
750 kcmil	**B-1649**	6	500	B-107
1000 kcmil	**B-1650**	6	3-200	B-107

Blue highlighted items are industry standard and most frequently ordered.

TYPE BCS-18 MOLDS

Horizontal Tap Cable to Vertical Steel Surface

Type BCS-18 Molds are used to connect a horizontal conductor to a vertical steel surface. Note that the cable is ON the surface. Size range is #6 through 500 kcmil solid or concentric stranded copper conductors. Contact BURNDY® for information on molds for conductors not listed below.

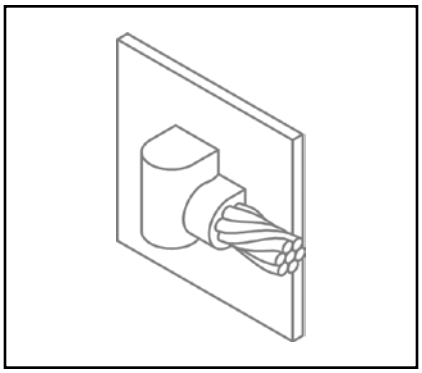

NOTES:
- For sizes not listed, contact BURNDY®
- Molds listed are for concentric stranded cable; add suffix "-S" to mold number for solid conductors
- For heavy duty molds, molds with wear plates or molds for Copperweld® cable, contact BURNDY®
- For expedited service, contact BURNDY®

Required Tools:
Handle Clamps - see chart for correct handle catalog number

Recommended Accessories:
B38-0309-00 Flint Ignitor; **B38-3922-00** Mold Cleaning Brush; **B38-0135-00** Cable Cleaning Brush; **B38-0330-00** Cable Clamp

Cable Size	Mold Number	Price Key	Weld Metal	Handle Clamps
#6	**B-5910**	4	45	B-106
#4	**B-2761**	4	45	B-106
#1	**B-6060**	4	65	B-106
1/0	**B-5419**	4	90	B-106
2/0	**B-2567**	4	90	B-106
3/0	**B-6072**	4	115	B-106
4/0	**B-9253**	4	115	B-106
250 kcmil	**B-2568**	4	115	B-106
300 kcmil	**B-6061**	4	150	B-106
350 kcmil	**B-6067**	4	200	B-106
500 kcmil	**B-8359**	4	200	B-106

TYPE BCS-5 MOLDS

Horizontal Cable Tap to Horizontal Cast Iron Surface

Type BCS-5 Molds are used to join horizontal cable taps to horizontal cast iron surfaces. Note that the cable is ON the surface. Size range is #6 through #1 solid or concentric stranded copper conductors. Contact BURNDY® for information on molds for conductors not listed below.

DO NOT use Type BCS-5 molds on Soil Pipe (ASTM A74-82). A test weld should be made on a section of pipe being used to determine the possibility of detrimental metallurgical effects.

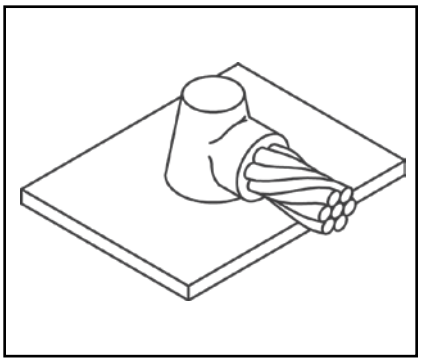

NOTES:
- For sizes not listed, contact BURNDY®
- Molds listed are for concentric stranded cable; add suffix "-S" to mold number for solid conductors
- For heavy duty molds, molds with wear plates or molds for Copperweld® cable, contact BURNDY®
- For expedited service, contact BURNDY®

Required Tools:
Handle Clamps - see chart for correct handle catalog number

Recommended Accessories:
B38-0309-00 Flint Ignitor
B38-3922-00 Mold Cleaning Brush
B38-0135-00 Cable Cleaning Brush
B38-0330-00 Cable Clamp

Cable Size	Mold Number	Price Key	Weld Metal	Handle Clamps
#6 Sol	**B-1613**	3 ①	2SCI	Incl.
#6	**B-1614**	3 ①	25CI	Incl.
#4 Sol	**B-1615**	3 ①	45CI	Incl.
#4	**B-1616**	3 ①	45CI	Incl.
#2 Sol	**B-1617**	3 ①	45CI	Incl.
#2	**B-1618**	3 ①	45CI	Incl.
#1 Sol	**B-1619**	3 ①	65CI	Incl.
#1	**B-1620**	3 ①	65CI	Incl.

① B38-0309-00 Flint ignitor included

Blue highlighted items are industry standard and most frequently ordered.

TYPE BCRE-1 MOLDS

Horizontal Parallel Tap to Rebar

Type BCRE-1 Molds are recommended for parallel, horizontal connections for solid or concentric stranded conductors #6 through 4/0 joined to reinforcing bars #3 through #6 and larger. The high copper content joint has a higher current carrying capacity than the conductors being joined and is impervious to vibration and moisture. Contact BURNDY® for information on molds for conductors not listed below.

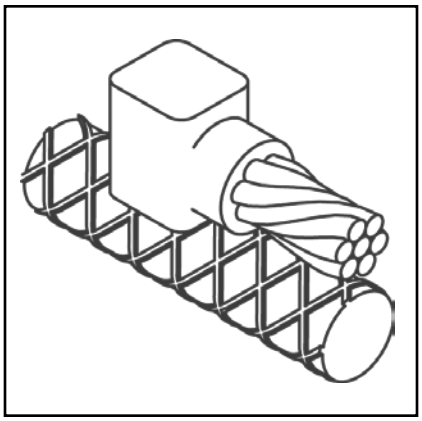

PACKING MATERIAL NOTE

A packing pad is necessary when making BURNDYWeld® connections to rebar. Packing material B38032900 is copper shim stock. Packing material numbers B38406100, B38406200 and B38406300 are a ceramic fiber material and can be used for one connection only. Be sure to specify packing material catalog number when ordering mold and weld metal.

Rebar Size	Cable Size	Mold Number	Packing Material	Price Key	Weld Metal	Handle Clamps
3	#6	**B-7500**	B38032900	4	25	B-106
	#4	**B-7501**	B38032900	4	32	B-106
	#2	**B-7502**	B38032900	4	45	B-106
	#1	**B-7503**	B38032900	4	65	B-106
	1/0	**B-7504**	B38032900	4	90	B-106
	2/0	**B-7505**	B38032900	4	90	B-106
	3/0	**B-7506**	B38032900	4	115	B-106
4 & Larger	4/0	**B-7507**	B38032900	4	115	B-106
	#6	**B-7508**	B38406100	3 ①	25	Incl.
	#4	**B-7509**	B38406100	3 ①	32	Incl.
	#2	**B-7510**	B38406100	3 ①	45	Incl.
4	#1	**B-7511**	B38406100	3 ①	65	Incl.
	1/0	**B-7512**	B38032900	4	90	B-106
	2/0	**B-7513**	B38032900	4	90	B-106
	3/0	**B-7514**	B38032900	4	115	B-106
	4/0	**B-7515**	B38032900	4	115	B-106
5	1/0	**B-7520**	B38032900	4	90	B-106
	2/0	**B-7521**	B38032900	4	90	B-106
	3/0	**B-7522**	B38032900	4	115	B-106
	4/0	**B-7523**	B38032900	4	115	B-106
6 & Larger	1/0	**B-7528**	B38406200	14+	90	Incl.
	2/0	**B-7529**	B38406200	14+	90	Incl.
	3/0	**B-7530**	B38406200	14+	115	Incl.
	4/0	**B-7531**	B38406200	14+	115	Incl.

① **B38-0309-00** Flint ignitor included

NOTES:
- For sizes not listed, contact BURNDY®
- Molds listed are for concentric stranded cable; add suffix "-S" to mold number for solid conductors
- For heavy duty molds, molds with wear plates or molds for Copperweld® cable, contact BURNDY®
- For expedited service, contact BURNDY®

Required Tools:
Handle Clamps - see chart for correct handle catalog number

Recommended Accessories:
B38-0309-00 Flint Ignitor
B38-3922-00 Mold Cleaning Brush
B38-0135-00 Cable Cleaning Brush
B38-0330-00 Cable Clamp

Blue highlighted items are industry standard and most frequently ordered.

TYPE BCRE-2 MOLDS

Horizontal Cable Tap to Horizontal Rebar Run

Type BCRE-2 Molds are recommended for right angle, horizontal connections for solid or concentric stranded conductors #6 through 4/0 joined to reinforcing bars #3 through #6. The high copper content joint has a higher current carrying capacity than the conductors being joined and is impervious to vibration and moisture.

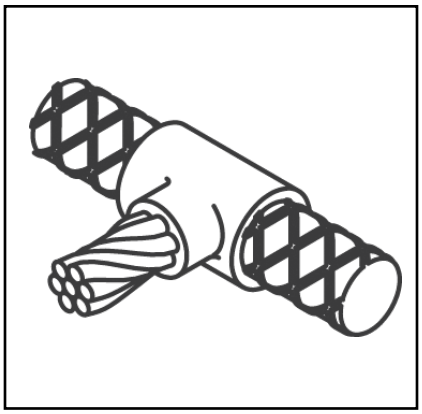

PACKING MATERIAL NOTE

A packing pad is necessary when making BURNDYWeld® connections to rebar. Packing material B38032900 is copper shim stock. Packing material numbers B38406100, B38406200 and B38406300 are a ceramic fiber material and can be used for one connection only. Be sure to specify packing material catalog number when ordering mold and weld metal.

Rebar Size	Cable Size	Mold Number	Packing Material	Price Key	Weld Metal	Handle Clamps
3	#6	**B-7588**	B38032900	4	45	B-106
	#4	**B-7589**	B38032900	4	45	B-106
	#2	**B-7590**	B38032900	4	65	B-106
	#1	**B-7591**	B38032900	4	65	B-106
	1/0	**B-7592**	B38032900	4	90	B-106
	2/0	**B-7593**	B38032900	4	90	B-106
	3/0	**B-7594**	B38032900	4	115	B-106
	4/0	**B-7595**	B38032900	4	115	B-106
4	#6	**B-7596**	B38032900	4	45	B-106
	#4	**B-7597**	B38032900	4	45	B-106
	#2	**B-7598**	B38032900	4	65	B-106
	#1	**B-7599**	B38032900	4	65	B-106
	1/0	**B-7600**	B38032900	4	90	B-106
	2/0	**B-7601**	B38032900	4	90	B-106
	3/0	**B-7602**	B38032900	4	115	B-106
	4/0	**B-7603**	B38032900	4	115	B-106
5	#6	**B-7604**	B38032900	4	90	B-106
	#4	**B-7605**	B38032900	4	90	B-106
	#2	**B-7606**	B38032900	4	90	B-106
	#1	**B-7607**	B38032900	4	90	B-106
	1/0	**B-7608**	B38032900	4	115	B-106
	2/0	**B-7609**	B38032900	4	115	B-106
	3/0	**B-7610**	B38032900	4	150	B-106
	4/0	**B-7611**	B38032900	4	150	B-106
6	#6	**B-7612**	B38032900	4	90	B-106
	#4	**B-7613**	B38032900	4	90	B-106
	#2	**B-7614**	B38032900	4	90	B-106
	#1	**B-7615**	B38032900	4	90	B-106
	1/0	**B-7616**	B38032900	4	115	B-106
	2/0	**B-7617**	B38032900	4	115	B-106
	3/0	**B-7618**	B38032900	4	150	B-106
	4/0	**B-7619**	B38032900	4	150	B-106

NOTES:
- For sizes not listed, contact BURNDY®
- Molds listed are for concentric stranded cable; add suffix "-S" to mold number for solid conductors
- For heavy duty molds, molds with wear plates or molds for Copperweld® cable, contact BURNDY®
- For expedited service, contact BURNDY®

Required Tools:
Handle Clamps - see chart for correct handle catalog number

Recommended Accessories:
B38-0309-00 Flint Ignitor
B38-3922-00 Mold Cleaning Brush
B38-0135-00 Cable Cleaning Brush
B38-0330-00 Cable Clamp

Blue highlighted items are industry standard and most frequently ordered.

TYPE BCRE-3 MOLDS

Horizontal through Cable to Vertical Rebar

Type BCRE-3 Molds are recommended for horizontal conductors to vertical rebar connections for solid or concentric stranded conductors #6 through 4/0 joined to reinforcing bars #3 through #7 & larger. The high copper content joint has a higher current carrying capacity than the conductors being joined and is impervious to vibration and moisture. Contact BURNDY® for information on molds for conductors not listed below.

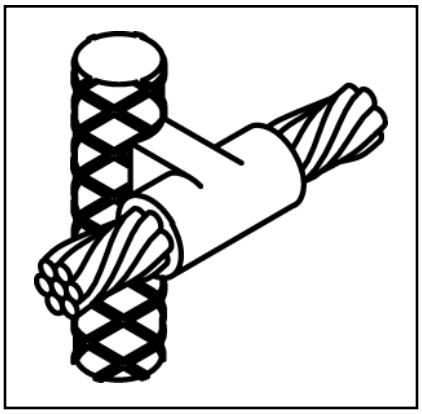

PACKING MATERIAL NOTE

A packing pad is necessary when making BURNDYWeld® connections to rebar. Packing material B38032900 is copper shim stock. Packing material numbers B38406100, B38406200 and B38406300 are a ceramic fiber material and can be used for one connection only. Be sure to specify packing material catalog number when ordering mold and weld metal.

Rebar Size	Cable Size	Mold Number	Packing Material	Price Key	Weld Metal	Handle Clamps
3	#6	**B-7620**	B38032900	24	90	B-106
	#4	**B-7621**	B38032900	24	90	B-106
	#2	**B-7622**	B38032900	24	90	B-106
	#1	**B-7623**	B38032900	24	115	B-106
	1/0	**B-7624**	B38032900	24	115	B-106
	2/0	**B-7625**	B38032900	24	115	B-106
	3/0	**B-7626**	B38032900	24	150	B-106
	4/0	**B-7627**	B38032900	24	150	B-106
4	#6	**B-7628**	B38032900	24	90	B-106
	#4	**B-7629**	B38032900	24	90	B-106
	#2	**B-7630**	B38032900	24	90	B-106
	#1	**B-7631**	B38032900	24	115	B-106
	1/0	**B-7632**	B38032900	24	115	B-106
	2/0	**B-7633**	B38032900	24	115	B-106
	3/0	**B-7634**	B38032900	24	150	B-106
	4/0	**B-7635**	B38032900	24	150	B-106
5	#6	**B-7636**	B38032900	24	90	B-106
	#4	**B-7637**	B38032900	24	90	B-106
	#2	**B-7638**	B38032900	24	90	B-106
	#1	**B-7639**	B38032900	24	115	B-106
	1/0	**B-7640**	B38032900	24	115	B-106
	2/0	**B-7641**	B38032900	24	115	B-106
	3/0	**B-7642**	B38032900	24	150	B-106
	4/0	**B-7643**	B38032900	24	150	B-106

Rebar Size	Cable Size	Mold Number	Packing Material	Price Key	Weld Metal	Handle Clamps
6	#6	**B-7644**	B38032900	24	90	B-106
	#4	**B-7645**	B38032900	24	90	B-106
	#2	**B-7646**	B38032900	24	90	B-106
	#1	**B-7647**	B38032900	24	115	B-106
	1/0	**B-7648**	B38032900	24	115	B-106
	2/0	**B-7649**	B38032900	24	115	B-106
	3/0	**B-7650**	B38032900	24	150	B-106
	4/0	**B-7651**	B38032900	24	150	B-106
7 & Larger	#6	**B-7652**	B38406300	4	90	B-106-41
	#4	**B-7653**	B38406300	4	90	B-106-41
	#2	**B-7654**	B38406300	4	90	B-106-41
	#1	**B-7655**	B38406300	4	115	B-106-41
	1/0	**B-7656**	B38406300	4	115	B-106-41
	2/0	**B-7657**	B38406300	4	115	B-106-41
	3/0	**B-7658**	B38406300	4	150	B-106-41
	4/0	**B-7659**	B38406300	4	150	B-106-41

NOTES:
- For sizes not listed, contact BURNDY®
- Molds listed are for concentric stranded cable; add suffix "-S" to mold number for solid conductors
- For heavy duty molds, molds with wear plates or molds for Copperweld® cable, contact BURNDY®
- For expedited service, contact BURNDY®

Required Tools:
Handle Clamps - see chart for correct handle catalog number

Recommended Accessories:
B38-0309-00 Flint Ignitor
B38-3922-00 Mold Cleaning Brush
B38-0135-00 Cable Cleaning Brush
B38-0330-00 Cable Clamp

Blue highlighted items are industry standard and most frequently ordered.

TYPE BCRE-4 MOLDS

Horizontal through Cable to Horizontal Rebar

Type BCRE-4 Molds are recommended for horizontal through conductors to horizontal rebar at right angle connections for solid or concentric stranded conductors #6 through 4/0 joined to reinforcing bars #3 through #6 & larger. The high copper content joint has a higher current carrying capacity than the conductors being joined and is impervious to vibration and moisture. Contact BURNDY® for information on molds for conductors not listed below.

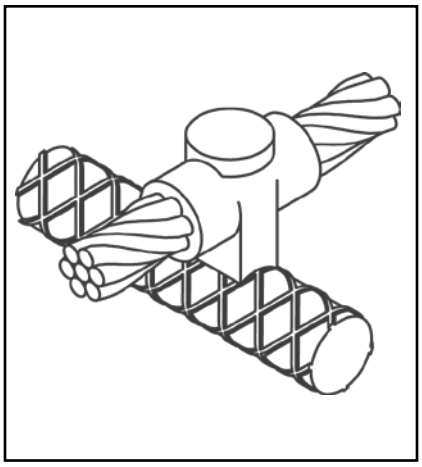

PACKING MATERIAL NOTE

A packing pad is necessary when making BURNDYWeld® connections to rebar. Packing material B38032900 is copper shim stock. Packing material numbers B38406100, B38406200 and B38406300 are a ceramic fiber material and can be used for one connection only. Be sure to specify packing material catalog number when ordering mold and weld metal.

Rebar Size	Cable Size	Mold Number	Packing Material	Price Key	Weld Metal	Handle Clamps
3	#6	**B-7708**	B38032900	4	90	B-106
	#4	**B-7709**	B38032900	4	90	B-106
	#2	**B-7710**	B38032900	4	90	B-106
	#1	**B-7711**	B38032900	4	115	B-106
	1/0	**B-7712**	B38032900	22	115	B-106
	2/0	**B-7713**	B38032900	22	115	B-106
	3/0	**B-7714**	B38032900	22	150	B-106
	4/0	**B-7715**	B38032900	22	150	B-106
4	#6	**B-7716**	B38032900	4	90	B-106
	#4	**B-7717**	B38032900	4	90	B-106
	#2	**B-7718**	B38032900	4	90	B-106
	#1	**B-7719**	B38032900	22	115	B-106
	1/0	**B-7720**	B38032900	22	115	B-106
	2/0	**B-7721**	B38032900	22	115	B-106
	3/0	**B-7722**	B38032900	22	150	B-106
	4/0	**B-7723**	B38032900	22	150	B-106
5	#6	**B-7724**	B38032900	4	90	B-106
	#4	**B-7725**	B38032900	4	90	B-106
	#2	**B-7726**	B38032900	4	90	B-106
	#1	**B-7727**	B38032900	22	115	B-106
	1/0	**B-7728**	B38032900	22	115	B-106
	2/0	**B-7729**	B38032900	22	115	B-106
	3/0	**B-7730**	B38032900	22	150	B-106
	4/0	**B-7731**	B38032900	22	150	B-106
6 & Larger	#6	**B-7732**	B38406100	14 ①	90	Incl.
	#4	**B-7733**	B38406100	14 ①	90	Incl.
	#2	**B-7734**	B38406100	14 ①	90	Incl.
	#1	**B-7735**	B38406100	14 ①	115	Incl.
	1/0	**B-7736**	B38406200	14 ①	115	Incl.
	2/0	**B-7737**	B38406200	14 ①	115	Incl.
	3/0	**B-7738**	B38406200	14 ①	150	Incl.
	4/0	**B-7739**	B38406200	14 ①	150	Incl.

NOTES:
- For sizes not listed, contact BURNDY®
- Molds listed are for concentric stranded cable; add suffix "-S" to mold number for solid conductors
- For heavy duty molds, molds with wear plates or molds for Copperweld® cable, contact BURNDY®
- For expedited service, contact BURNDY®

Required Tools:
Handle Clamps - see chart for correct handle catalog number

Recommended Accessories:
B38-0309-00 Flint Ignitor
B38-3922-00 Mold Cleaning Brush
B38-0135-00 Cable Cleaning Brush
B38-0330-00 Cable Clamp

① B38-0309-00 Flint ignitor included

Blue highlighted items are industry standard and most frequently ordered.

TYPE BCRE-6 MOLDS

Horizontal Cable Tap to Vertical Rebar

Type BCRE-6 Molds are recommended for horizontal conductors terminating at right angles to vertical rebar connections for solid or concentric stranded conductors #6 through 4/0 joined to reinforcing bars #3 through #7 and larger. The high copper content joint has a higher current carrying capacity than the conductors being joined and is impervious to vibration and moisture.

Contact BURNDY® for information on molds for conductors not listed below.

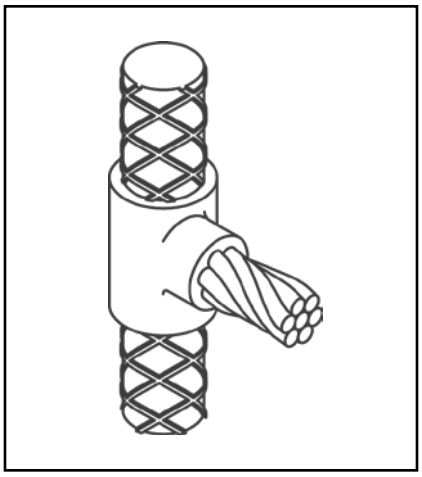

PACKING MATERIAL NOTE

A packing pad is necessary when making BURNDYWeld® connections to rebar. Packing material B38032900 is copper shim stock. Packing material numbers B38406100, B38406200 and B38406300 are a ceramic fiber material and can be used for one connection only. Be sure to specify packing material catalog number when ordering mold and weld metal.

Rebar Size	Cable Size	Mold Number	Packing Material	Price Key	Weld Metal	Handle Clamps
3	#6	**B-7884**	B38032900	4	90	B-106
	#4	**B-7885**	B38032900	4	90	B-106
	#2	**B-7886**	B38032900	4	90	B-106
	#1	**B-7887**	B38032900	4	115	B-106
	1/0	**B-7888**	B38032900	4	115	B-106
	2/0	**B-7889**	B38032900	4	115	B-106
	3/0	**B-7890**	B38032900	4	150	B-106
	4/0	**B-7891**	B38032900	4	150	B-106
4	#6	**B-7892**	B38032900	4	90	B-106
	#4	**B-7893**	B38032900	4	90	B-106
	#2	**B-7894**	B38032900	4	90	B-106
	#1	**B-7895**	B38032900	4	115	B-106
	1/0	**B-7896**	B38032900	4	115	B-106
	2/0	**B-7897**	B38032900	4	115	B-106
	3/0	**B-7898**	B38032900	4	150	B-106
	4/0	**B-7899**	B38032900	4	150	B-106
5	#6	**B-7900**	B38032900	4	90	B-106
	#4	**B-7901**	B38032900	4	90	B-106
	#2	**B-7902**	B38032900	4	90	B-106
	#1	**B-7903**	B38032900	4	115	B-106
	1/0	**B-7904**	B38032900	4	115	B-106
	2/0	**B-7905**	B38032900	4	115	B-106
	3/0	**B-7906**	B38032900	4	150	B-106
	4/0	**B-7907**	B38032900	4	150	B-106

Rebar Size	Cable Size	Mold Number	Packing Material	Price Key	Weld Metal	Handle Clamps
6	#6	**B-7908**	B38032900	4	90	B-106
	#4	**B-7909**	B38032900	4	90	B-106
	#2	**B-7910**	B38032900	4	90	B-106
	#1	**B-7911**	B38032900	4	115	B-106
	1/0	**B-7912**	B38032900	4	115	B-106
	2/0	**B-7913**	B38032900	4	115	B-106
	3/0	**B-7914**	B38032900	4	150	B-106
	4/0	**B-7915**	B38032900	4	150	B-106
7 & Larger	#6	**B-7916**	B38406300	4	90	B-106-32 ①
	#4	**B-7917**	B38406300	4	90	B-106-32 ①
	#2	**B-7918**	B38406300	4	90	B-106-32 ①
	#1	**B-7919**	B38406300	4	115	B-106-32 ①
	1/0	**B-7920**	B38406300	4	115	B-106-32 ①
	2/0	**B-7921**	B38406300	4	115	B-106-32 ①
	3/0	**B-7922**	B38406300	4	150	B-106-32 ①
	4/0	**B-7923**	B38406300	4	150	B-106-32 ①

① The **B106-32** comes complete with a **B-106** handle clamp and **B40-0106-76** vertical chain clamp. Although good for use on all sizes of rebar, vertical chain clamps are strongly recommended on large size rebar as they hold the mold to the rebar securely. If you already have a B-106 handle clamp, you can purchase the vertical chain clamps separately.

NOTES:

- For sizes not listed, contact BURNDY®
- Molds listed are for concentric stranded cable; add suffix "-S" to mold number for solid conductors
- For heavy duty molds, molds with wear plates or molds for Copperweld® cable, contact BURNDY®
- For expedited service, contact BURNDY®

Required Tools:
Handle Clamps - see chart for correct handle catalog number

Recommended Accessories:
B38-0309-00 Flint Ignitor
B38-3922-00 Mold Cleaning Brush
B38-0135-00 Cable Cleaning Brush
B38-0330-00 Cable Clamp

Blue highlighted items are industry standard and most frequently ordered.

BURNDY® GROUNDMAX™

BURNDY® GROUNDMAX™ is an economical solution for areas with very difficult grounding issues. BURNDY® GROUNDMAX™ is highly conductive in a wet or dry application and does not require moisture to lower the resistance of your grounding system. BURNDY® GROUNDMAX™ contains a corrosion inhibitor which forms a film on copper, creating a barrier against corrosion. BURNDY® GROUNDMAX™ can be poured in dry or pumped in slurry form. No tamping required. It is very contractor friendly. No special tools required.

BURNDY® GROUNDMAX™

Advantages:

- Easy to install
- Electrically conductive
- Environmentally friendly
- Will not leach into the ground
- Positive low resistance, electrical connection to earth
- Does not contain any hazardous chemicals
- Compatible with all copper grounding systems
- Contains a corrosion inhibitor to protect copper
- Will not expand or shrink
- Not affected by freezing
- Excellent shelf life
- Typical resistivity <10 Ohm-cm

Material Required per Linear Foot of Trench Width of Trench (inches)												
		4	6	8	10	12	14	16	18	20	22	24
Thickness of BURNDY® GROUNDMAX™ (Inches)	2	4.10	6.20	8.10	10.10	12.10	14.10	16.20	18.20	20.20	22.20	24.20
	3	6.20	9.30	12.10	15.20	18.20	21.20	24.20	27.30	30.30	33.30	36.40
	4	8.20	12.30	16.20	20.20	24.20	28.30	32.30	36.40	40.40	44.50	48.50
	5	10.30	15.40	20.20	25.30	30.30	35.40	40.40	45.50	50.60	55.60	60.60
	6	12.30	18.50	24.20	30.30	36.40	42.40	48.50	54.60	60.60	66.70	72.70
	7	14.40	21.60	28.30	35.40	42.40	49.50	56.60	63.70	70.70	77.80	84.90
	8	16.40	24.70	32.30	40.40	48.50	56.00	64.70	72.70	80.80	88.90	97.00
	9	18.50	27.80	36.40	45.50	54.60	63.70	72.70	81.80	90.90	100.00	109.10
	10	20.60	30.80	40.40	50.50	60.60	70.70	80.80	90.90	101.00	111.10	121.20

To calculate the pounds of material required to fill a trench:

- Determine desired thickness
- Move to the right on the chart above until you are under the known width of the trench - this number will be the weight of the material in lbs/linear ft
- Take this number and multiply by the length of the trench in feet; your answer will be the amount of BURNDY® GROUNDMAX™ material required to fill the trench to the desired level in pounds

Example:

Thickness	=	6 inches
Width of trench	=	18 inches
		54.6 lbs per linear ft (see table above)
Answer	=	54.6 lbs per linear ft x 25 ft trench = 1,365 lbs of BURNDY® GROUNDMAX™
	=	Quantity of 28 50-lb bags of BURNDY® GROUNDMAX™

BURNDY® GROUNDMAX™

Application Information

Vertical Installation

Drill or bore a hole the desired diameter and depth. Suspend ground electrode in center of hole to be filled. Pour BURNDY® GROUNDMAX™ until desired level is obtained. No tamping is required.

Horizontal or Grid Construction ①

Pour into horizontal trench until level of ground wire is reached. Place ground wire. Pour additional BURNDY® GROUNDMAX™ until wire is covered to desired height. Cover with fill. No tamping required.

For grid construction, pour BURNDY® GROUNDMAX™ and spread over ground grid until desired thickness is achieved. Cover with fill.

① Entire grounding system should be surrounded by BURNDY® GROUNDMAX™. Conductors should be insulated as they exit BURNDY® GROUNDMAX™ column.

Dry Volume of BURNDY® GROUNDMAX™ vz. Hole Size		Ground Resistance Comparison of Bare Rod vs.	
Hole Size	Lbs. of BURNDY® GROUNDMAX™ Per Ft.	Hole Size with 5/8" x 10' Rod in Center of 15' Hole	Percent Resistance Compared to Rod Only (100%)
4"	6.5	4"	52%
6"	14.5	6"	47%
8"	25.8	8"	44%
10"	40.4	10"	42%
12"	58.1	12"	40%

Steady State Leakage Resistance ② Using 4/0 Copper Wire vs. BURNDY® GROUNDMAX™					
Length	0.457" Diameter Wire Only	Percentage of Resistance with 0.457" Wire Plus BURNDY® GROUNDMAX™ in Various Diameters Compared to Wire Only (100%)			
		2"	3"	4"	6"
25'	100%	83%	78%	74%	69%
50'	100%	85%	81%	77%	73%
75'	100%	86%	82%	79%	75%
100'	100%	87%	83%	80%	77%
150'	100%	88%	84%	82%	78%
200'	100%	88%	85%	83%	79%
250'	100%	89%	85%	83%	80%
300'	100%	89%	86%	84%	80%

② The use of BURNDY® GROUNDMAX™ around the grounding system will also reduce surge impedance by increasing the effective contact area of the electrode to soil.

Horizontal Construction

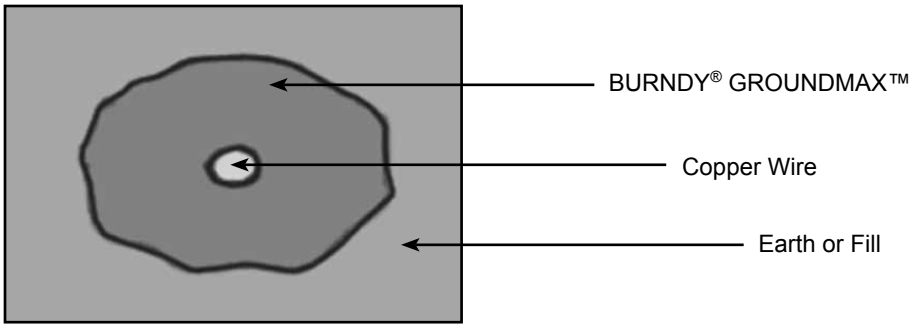

Grid Construction

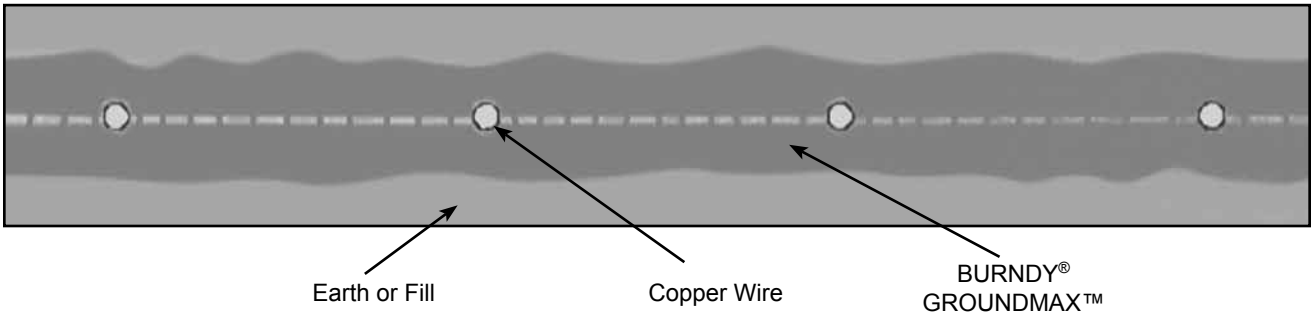

Blue highlighted items are industry standard and most frequently ordered.

BURNDY® GRIDMAX®

Grounding, Personnel Safety Mats, Equipotential Bonding, Pool and Spa Grounding

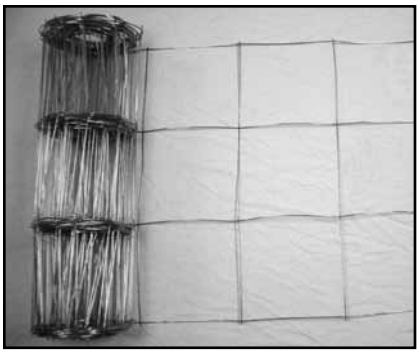

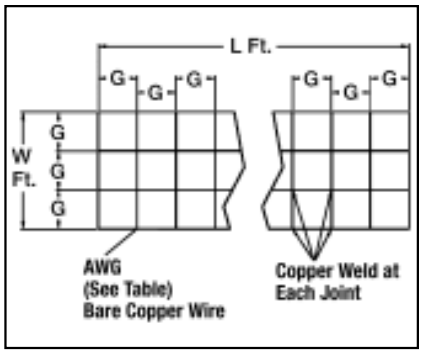

Features & Benefits

- Manufactured from bare solid copper
- Spaced on 4", 6" or 12" centers
- Copper to copper weld with 6% silver
- Furnished in sections with lengths from 4' to 100'
- Easily and economically installed using BURNDYWeld®, HYGROUND® or our Mechanical connectors
- Sizes made specifically for the Pool and Spa market 3' x 100' and 3' x 50'. But can be used where any large area grounds are required

Catalog Number	Conductor	Dimensions		
		G (spacing)	L (length)	W (width)
BGM3100	8 AWG	12"	100'	3'
BGM3050	8 AWG	12"	50'	3'
BGM640044	6 AWG	4"	4'	4'
BGM640068	6 AWG	8"	6'	4'
BGM64006	6 AWG	12"	6'	4'
BGM640066	6 AWG	6"	6'	4'

Call for custom mats

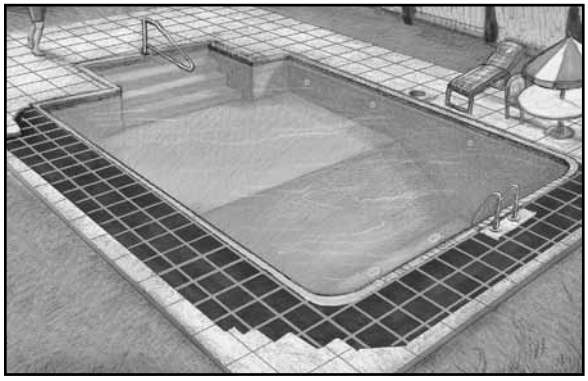

Example:
GRIDMAX™
3' wide in pool area

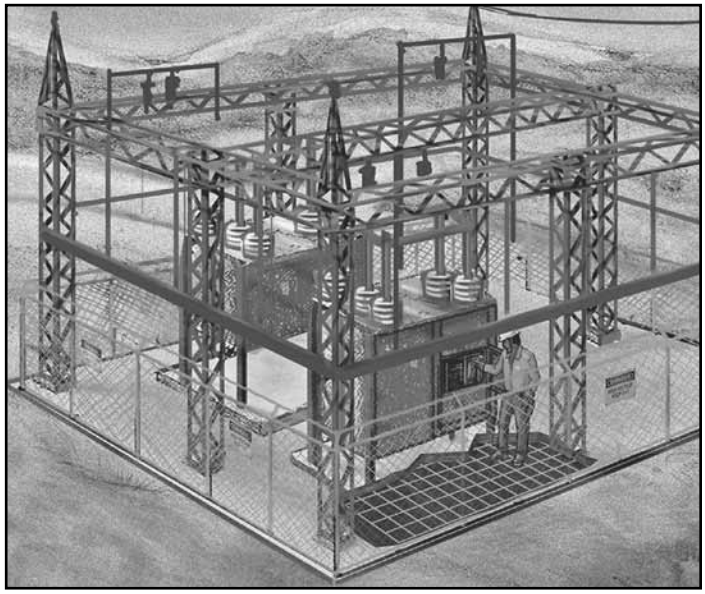

Example:
GRIDMAX™
Personnel Safety Mat

Blue highlighted items are industry standard and most frequently ordered.

B-106 & B-107 HANDLE CLAMPS

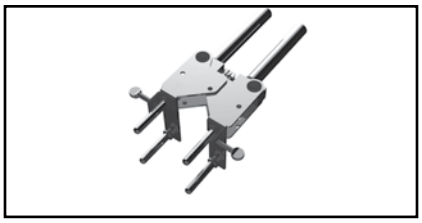

BURNDYWeld® Handle Clamps make possible the use of many different sizes and types of molds with only two different clamps. The two handle clamps are catalog numbers **B-106** & **B-107**. These will fit 95% of all standard BURNDYWeld® molds.

1. Use B-106 clamps for all molds having a price key 4, 7, 17, 22 or 24. These molds are a nominal 3 1/8" x 3 1/8" square.
2. Use B-107 clamps for all molds having a price key 5, 6, 8 or 23. These molds are a nominal 4" x 4" square.
3. All molds having a price key 2, 3, 9, 10, 11, 12, 14, 15 or 16 have an attached frame; separate handles are not required.

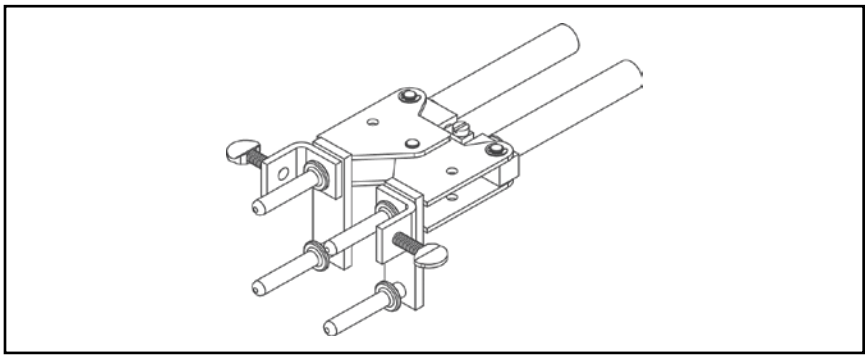

B40-0106-75 HANDLE ATTACHMENT

This Handle Attachment is used to hold Price Key 14 molds in position. It easily attaches to the B-106 Handle Clamp. This Handle Attachment can be used with weld types BCRE-1 and BCRE-4.

Catalog Number: **B40-0106-75**

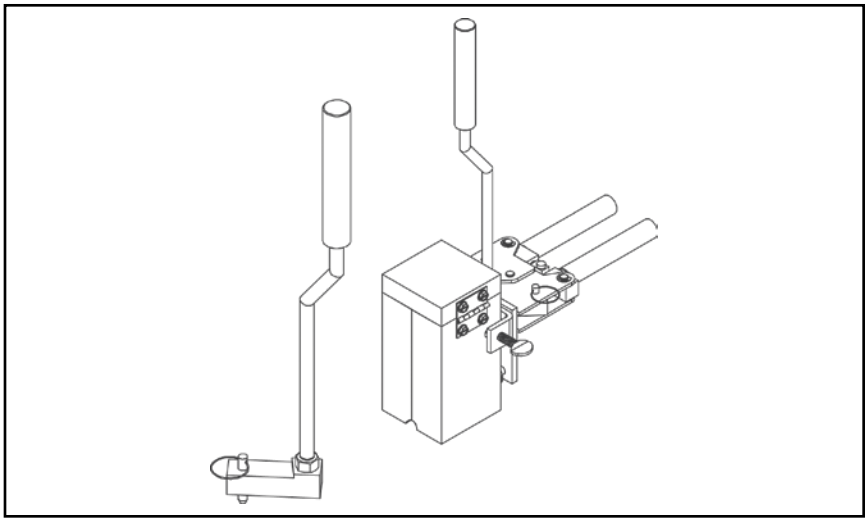

MOLD SUPPORT CLAMP

The Mold Support Clamp is used to hold a mold in position on a vertical steel column or angle. It is easily attached to the Handle Clamps. The Mold Support Clamp can be used with weld types BCS-3, BCS-18, BCS-23 and BCS-27.

Catalog Number: **B40-3657-00**

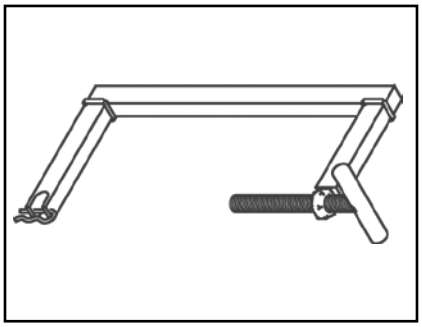

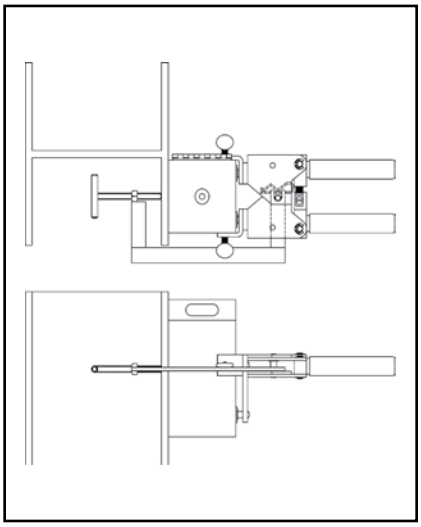

Blue highlighted items are industry standard and most frequently ordered.

VERTICAL MAGNETIC CLAMPS

Magnetic Clamps are used to hold a mold in position on a vertical steel surface. The magnetic clamp can be purchased complete with B-106 Handle Clamps or if you already have a set of handle clamps, you can order just the magnetic mounting assembly. The mounting assembly can easily be mounted on the prongs of your existing B-106 handle clamps. A minimum of 10" is required.

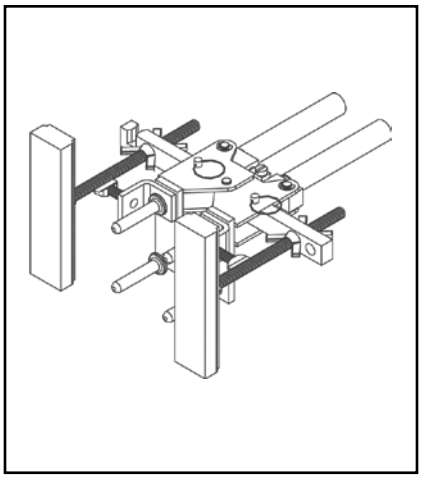

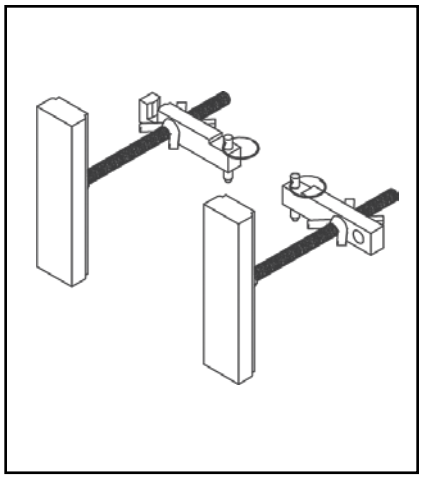

Magnetic Clamps with B106 Handle		
Catalog Number	Fits Molds w/ Price Key	For Use with Weld Types
B40-4431-00	4 & 17	BCS-3, 4, 7 & 23

Magnetic Clamp Only		
Catalog Number	Fits Handle Clamps	For Use with Weld Types
B40-4431-00	B-106 & B-107	BCS-3, 4, 7 & 23

HORIZONTAL & VERTICAL CHAIN CLAMPS

BURNDYWeld®

Chain Clamps are used to hold a mold in position on horizontal or vertical pipe up to 4" in diameter. For larger pipe a 20" chain extension is available to allow the chain clamps to be used on pipe up to 10" in diameter. The chain clamp can be purchased complete with B-106 or B-107 Handle Clamps or if you already have a set of handle clamps, you can order just the chain clamp and mounting assembly. The mounting assembly can easily attached to your existing handle clamps. 20" Chain Extension catalog number: **B40-0106-27**.

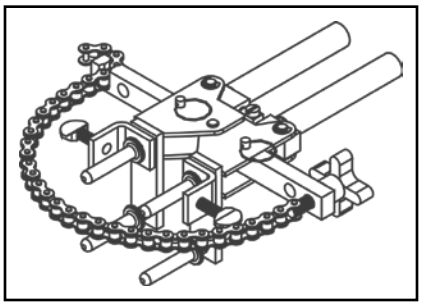

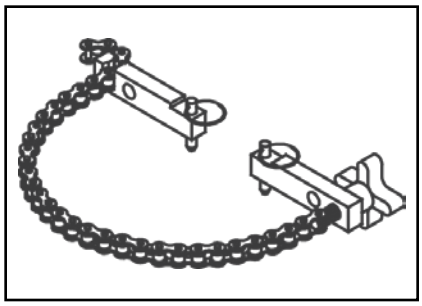

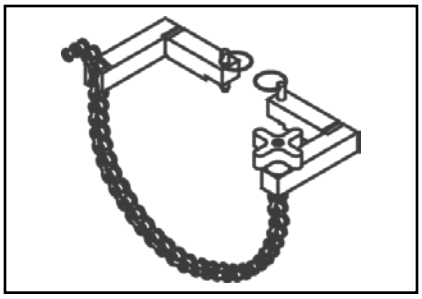

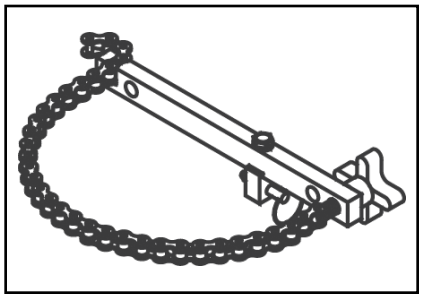

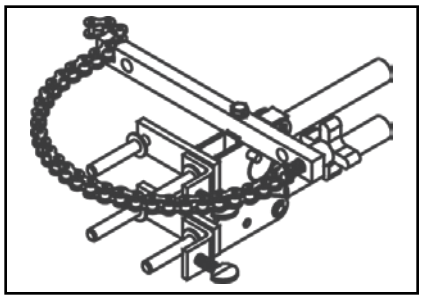

Chain Clamps			
Catalog Number	Fits Molds W/Price Key	For Use With Weld Types	Pipe Position
B106-32	4, 17, 22 & 24	BCS-3, 4, 7, 23 & BCRE-6	Vertical
B107-32	5, 6 & 23	BCS-3, 4, 7 & 23	Vertical
B106-37	4, 17, 22 & 24	BCS-1, 2, 5, 8 & 9	Horizontal
B106-41	4, 17	BCS-6, 18 & BCRE-3	Vertical

Chain Clamp Only (Handle Clamps Not Included)			
Catalog Number	Fits Handle Clamp	For Use With Weld Types	Pipe Position
B40-0106-76	B-106 & B-107	BCS-3, 4, 7, 23 & BCRE-6	Vertical
B40-0106-78	B-106 & B-107	BCS-1, 2, 5, 8 & 9	Horizontal
B40-0106-77	B-106 & B-107	BCS-6, 18 & BCRE-3	Vertical

Blue highlighted items are industry standard and most frequently ordered.

BURNDYWeld® ACCESSORIES

B38-0330-00 Cable Clamp

The BURNDYWeld® Cable Clamp is recommended for holding a wide range of cables properly in place in molds when welding cables that are under tension. This prevents the cables from pulling out of the mold when the weld is made.

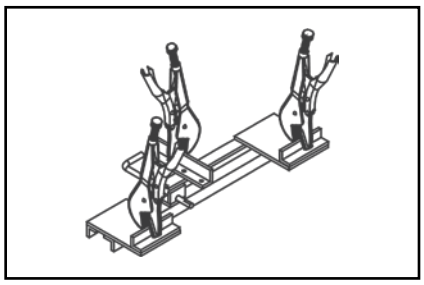

Cable Cleaning and Card Cloth Brush

The Cable Cleaning Brush is recommended for cleaning heavily oxidized cables. The V-shape brushes permit their use over a wide range of cable sizes. Brush assembly consists of a handle with two stiff wire bristle brushes that are rotatable, for longer life and are replaceable.

The Card Cloth Brush is used for cleaning large conductors and bus bar. It has short stiff bristles. These brushes are for cleaning cable only, not molds.

The Mold Cleaning Brush **B38-3922-00** is used to clean the graphite mold without scratching the mold.

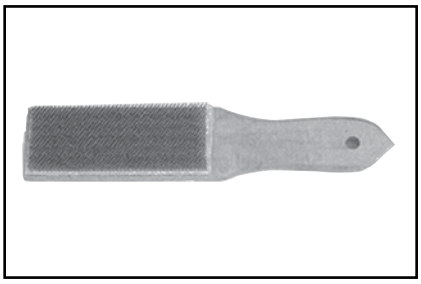

Description	Catalog Number
Cable Cleaning Brush	**B38-0315-00**
Replacement Brush	**B38-0135-01**
Card Cloth Brush	**B38-0306-00**
Mold Cleaning Brush	**B38-3922-00**

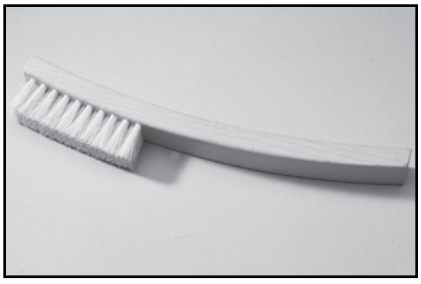

Mold Cleaners

Mold Cleaners are used to clean the slag from molds that are not split through the crucible.

B40-0319-01 for cartridge sizes #15 through #65

B40-0319-03 for cartridge sizes #90 through #500

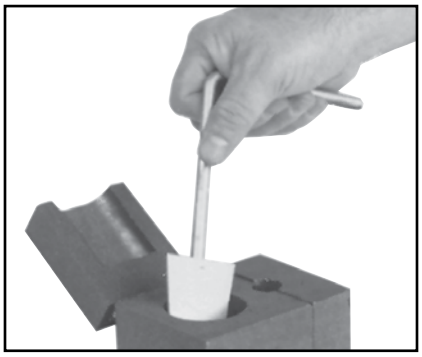

Packing Material

Packing material is used to prevent the molten weld metal from leaking out of the mold. When the cable opening becomes worn from heavy use, the packing material may be used to prolong mold use. It is also used around 7 strand cable to prevent leaking. Packing material comes in a 1 lb. or 5 lb. package.

Description	Catalog Number
1 lb. package	**B38412900**
5 lb. package	**B38412905**

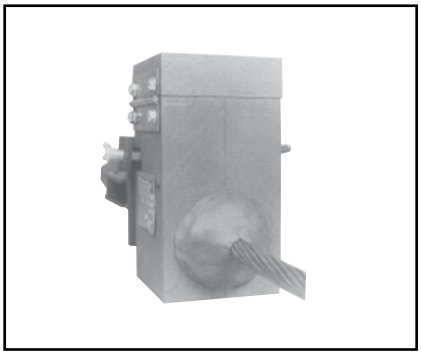

Blue highlighted items are industry standard and most frequently ordered.

BURNDYWeld® ACCESSORIES

BURNDYWeld® Tool Kit

B38-0302-00	Tool Kit with Tools Shown except Rasp
B38-0302-02	Tool Kit with Tools Shown and Rasp
B38-0303-00	Tool Box only

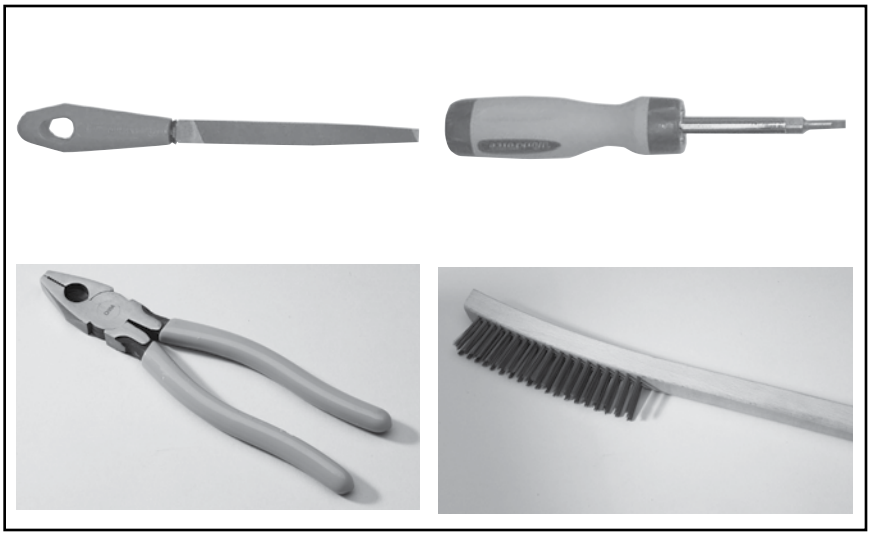

BURNDYWeld® Tools

The **B38-0309-00** Flint Ignitor is used to ignite the starting powder. Each mold that is sold with a frame has a Flint Ignitor included. For added safety a Flint Ignitor extension is available, catalog number **B38-0904-00**, that attaches to the B38-0309-00 Flint Ignitor. This allows installers to stay approximately 36" away from the mold. To order replacement flints, specify part number **B38-0309-01**.

B38-0309-00	Flint Ignitor
B38-0304-00	8" File
B38-0307-00	Crimping Tool
B38-3922-00	Mold Cleaning Brush
B38-0308-00	6" Screwdriver
B38-0305-00	Wire Brush
B38-0101-00	Rasp
B38-0306-00	Card Cloth Brush

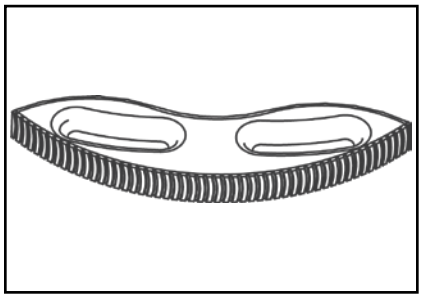

B38-0101-00 Rasp

This tempered steel, curved rasp is recommended for removing rust and mill scale from steel and cast iron surfaces. The blade is replaceable. To order replacement rasp blade, specify catalog number **B38-0101-01**.

Not recommended for use on galvanized surfaces.

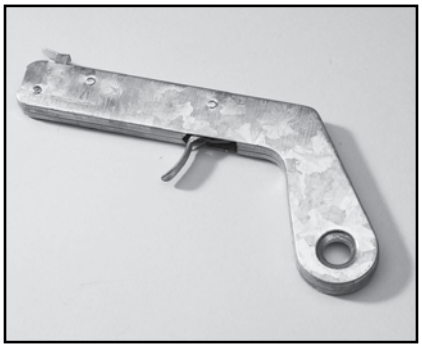

B38-0309-00 Flint Ignitor

The **B38-0309-00** Flint Igniter is used to ignite the starting powder. Each mold that is sold with a frame has a Flint Igniter included. For added safety a Flint Igniter extension is available, catalog number B38-0904-00, that attaches to the **B38-0309-00** Flint Igniter. This allows installers to stay approximately 36" away from the mold.

To order replacement flints, specify part number **B38-0309-01.**

Ground Rod Driving Sleeves

Ground Rod Driving Sleeves are placed over the top of a ground rod while driving it into the ground. This prevents the top from mushrooming or flaring out. Ground rod driving sleeves are available in sizes to fit all standard unthreaded ground rods.

Catalog Number	For Use On
B38-3662-01	1/2" Copper Clad or Steel Ground Rod
B38-3662-02	5/8" Copper Clad Ground Rod
B38-3662-05	5/8" Steel Ground Rod
B38-3662-03	3/4" Copper Clad Ground Rod
B38-3662-06	3/4" Steel Ground Rod
B38-3662-04	1" Copper Clad Ground Rod

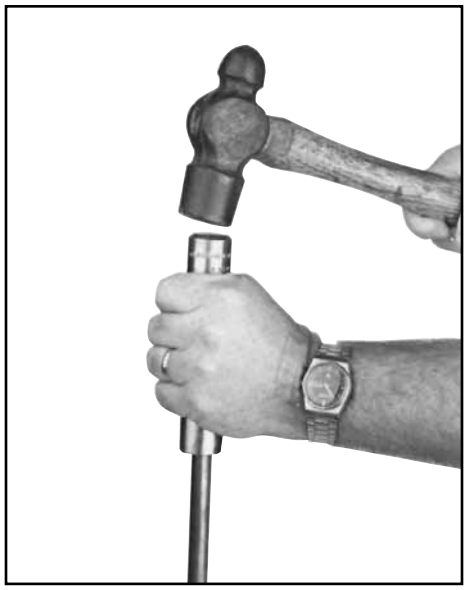

SHIM STOCK AND ADAPTER SLEEVES

BURNDYWeld® molds designed for larger cable sizes can be used on smaller diameter cables if copper adapter sleeves or shim stock are utilized. The copper shim stock, .0108" x 1-1/2" x 3", is normally wrapped around cable until the diameter is about equal to the cable opening. A tight fit is not necessary as the shim stock will unwrap slightly and prevent leakage of weld metal. To order shim stock use part number **B38-0329-00**. Shim stock comes 100 pieces per box.

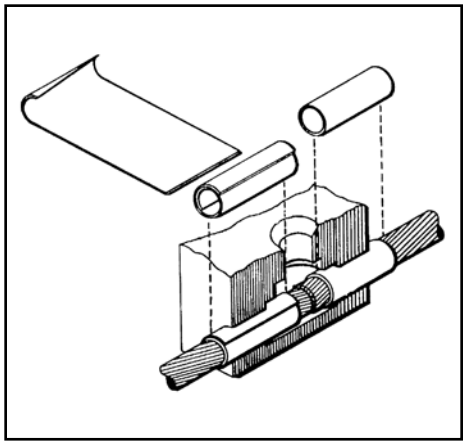

For Use on Cable Size		Part Number	Use in Mold Size	Sleeve Dimensions		
Stranded	Solid			O.D. Size	I.D.	Length
#12, #14	#10, #12, #14	**BA-200**	#6 Str. & Sol.	0.15	0.11	1.00
#9. #10	#8. #9. #10	**BA-208**	#4 Sol.	0.20	0.14	1.00
#7, #8, #10	#6, #8	**BA-201**	#4	0.22	0.17	1.00
#6	#5	**BA-202**	#2	0.29	0.19	1.00
#4, #5	#3, #4	**BA-207**	#2	0.30	0.24	1.00
#4	#2	**BA-204**	#1	0.34	0.24	1.00
#2	#1	**BA-203**	1/0	0.37	0.30	1.00
#1	1/0	**BA-209**	2/0	0.42	0.35	1.00
1/0, #1	2/0	**BA-205**	3/0 & 4/0 Sol.	0.46	0.38	1.00
2/0, 1/0	3/0	**BA-240**	4/0	0.52	0.43	1.50
4/0	—	**BA-211**	300 kcmil	0.62	0.54	1.25
250 kcmil	—	**BA-212**	350 kcmil	0.67	0.59	1.25
350, 400 kcmil	—	**BA-213**	500 kcmil	0.81	0.76	1.50
250, 300, 350 kcmil	—	**BA-214**	500 kcmil	0.81	0.70	1.50
750, 800 kcmil	—	**BA-215**	1000 kcmil	1.15	1.05	1.50

Blue highlighted items are industry standard and most frequently ordered.

TABLE OF CONTENTS

Introduction F-2

PENETROX™ Oxide Inhibitor (How to Install Connectors) F-2

PENETROX™ F-3, F-4

Type BDSC Sealing Compound F-5

Thin Wall Heat Shrink Tubing
Type HS-T-PF
6 Inch Lengths F-6
4 Foot Reels F-7
25 Foot Reels F-8

Heavy Wall Heat Shrink Tubing
Type HS-H-PF
Cut Lengths; 4 Foot Sticks F-9

Caps

Heavy Wall Heat Shrinkable End Cap
Type HSIC-FR F-10

Super-Seal Waterproofing Mastic Push-On End cap
Type BSC F-11

Force Fit Cable Caps
Type BPC F-12

Fire Retardant Heat Shrink Tubing
Type HSC-FR; Clear VISI-SHRINK™
50' or 250' Reels F-13

Type HS-FR
50', 250' or 100' Reels F-14

MISCELLANEOUS ACCESSORIES

Type BHSG1100 Heat Gun F-15

Blue highlighted items are industry standard and most frequently ordered.

INTRODUCTION

BURNDY wiring accessories have been designed to supplement and enhance BURNDY connector selection and use. All have been designed and engineered for easy installation and long life, reflecting over 85 years of experience and resulting contributions to all aspects of the electrical industry.

PENETROX™

HOW TO INSTALL CONNECTORS:

1. Select the right connector.

Always use an aluminum connector for aluminum or copper conductor. Choose a connector that's marked for the wire size you're using. Never use a copper connector on aluminum conductor.

2. Strip carefully.

Remove the insulation without nicking the wire.

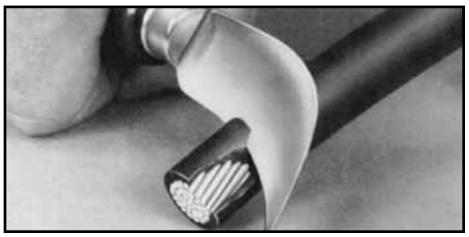

3. Brush thoroughly.

Always wire-brush the stripped portion of the wire. An unplated terminal pad, and the surface to which the terminal will be attached should also be wire-brushed.

4. Apply PENETROX™

For mechanical connectors, apply PENETROX™ joint compound liberally to the conductor to prevent the formation of surface oxides once the connection is made. Also apply PENETROX™ to any terminal pad.

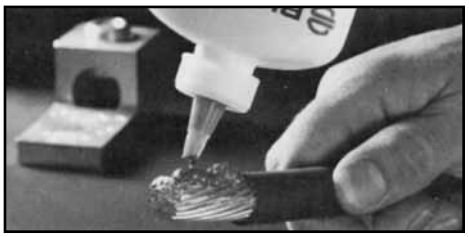

5. Tighten completely.

For mechanical connectors, use wrench or screwdriver to securely tighten the aluminum connectors, as recommended by BURNDY.

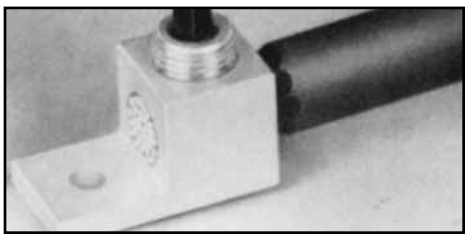

6. Crimp.

For compression connectors, choose the right die and the right tool. Insert the wire completely and make the recommended number of crimps.

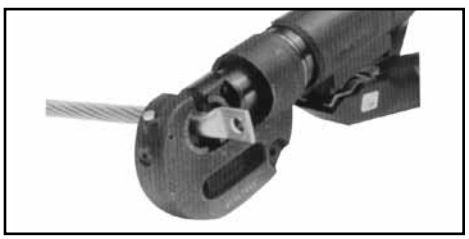

Blue highlighted items are industry standard and most frequently ordered.

TYPES PENETROX™ A, A-13, E AND HT

OXIDE-INHIBITING JOINT COMPOUNDS

PENETROX™ oxide-inhibiting compounds produce low initial contact resistance, seal out air and moisture, prevent oxidation or corrosion, exhibit superior weathering characteristics, are usable over wide temperature ranges, and provide a high conductivity "gas-tight" joint. All PENETROX™ compounds contain homogeneously suspended metal particles. The suspended metal particles assist in penetrating thin oxide films, act as electrical "bridges" between conductor strands, aid in gripping the conductor, improve electrical conductivity and enhance the integrity of the connection.

The specially formulated PENETROX™ compounds are for use with compression and bolted connectors providing an improved service life for both copper and aluminum connections. Additionally, the nontoxic compounds are an excellent lubricant for threaded applications reducing galling and seizing.

PENACARTRIDGE

PENACARTRIDGE is a 1 lb. cartridge filled with PENETROX-A. It's designed to fit standard caulking guns for easy insertion into transmission and distribution connectors. Additionally, this packaging design provides a convenient method for applying PENETROX™ to many different applications.

PENETROX™ A-13

PENETROX™ A-13 is a synthetic base compound with evenly suspended zinc particles. It is recommended for aluminum to aluminum, aluminum to copper connections plus aluminum conduit threads. It is compatible with rubber, polyethylene and other insulating materials. UL Listed for all voltages.

PENETROX™ A

PENETROX A is a natural (petroleum) base compound with evenly suspended zinc particles. It is recommended for aluminum to aluminum, aluminum to copper connections and aluminum conduit threads. It is not recommended for use with rubber or polyethylene insulated conductors. UL listed to 600V.

PENETROX™ E

PENETROX™ E is a synthetic base compound with evenly suspended copper particles. It is recommended for copper to copper, copper threads and all grounding applications. UL Listed.

PENETROX™ HT

PENETROX™ HT is a synthetic silicone based compound with evenly suspended zinc particles and nickel-aluminum alloy particles. It is recommended for aluminum to aluminum connections. It is compatible with rubber. Designed for use with High Temperature ACSS and ACCC connectors. Not UL Listed.

Blue highlighted items are industry standard and most frequently ordered.

PENETROX™ A, A-13, E AND HT

TECHNICAL INFORMATION

PENETROX A
PENETROX A consists of a natural (petroleum) base vehicle in which zinc particles are suspended. For aluminum to aluminum, aluminum to copper applications and aluminum conduit threads. It is not recommended for use with rubber and polyethylene insulated conductors. UL Listed to 600 volts.

PENETROX A-13
PENETROX A-13 consists of a non-petroleum base vehicle in which zinc particles are suspended. Recommended for aluminum to aluminum, aluminum to copper applications and aluminum conduit threads. Compatible with insulating materials such as rubber, or polyethylene. UL Listed and recommended for all voltages.

PENETROX E
PENETROX E consists of a non-petroleum base vehicle in which copper granules are suspended. Recommended for copper to copper applications, grounding and for use on copper conduit threads. UL Listed to 600 volts.

PENETROX HT
PENETROX HT consists of a non-petroleum base vehicle in which zinc and nickel-aluminum particles are suspended. Recommended for use with aluminum to aluminum High Temperature rated ACSS and ACCC conductors. Not UL Listed.

Easy to apply:

1. Scratch brush the conductor surfaces until bright and clean.
2. Immediately apply PENETROX™ to the conductive surfaces.
3. For EHV applications, remove all excess PENETROX™ after installation is complete.

SHELF LIFE
When stored in its original container in cool (under 100°F) dry environment, PENETROX™ oxide inhibiting compound will remain workable and functional for 5 years from the Date of Manufacture (MO) marked on the container.

PROPERTIES OF PENETROX™

Property	Value PENETROX™ Definition	PENETROX™ HT	PENETROX™ E & A13	PENETROX™ A
Penetration (Unworked)	The value in accordance to ASTM D217 indicates the consistency of a grease. The higher the number, the softer the grease.	240	250	230
Dropping Point (Minimum)	The temperature at which the grease passes from the semi-solid to a liquid state under test conditions.	>580° F	350° F	230° F
Pour Point (Maximum)	The lowest termperature at which the compound will flow. Pour point is the lubricant's ability to perform in cold conditions.	–58° F	–40° F	–15° F

* MSDS sheets available through customer service.

ORDERING INFORMATION

Catalog Number				Container Type	Container Size
PENETROX™ A	PENETROX™ A-13	PENETROX™ E	PENETROX™ HT †		
PENA 1/2	—	—	—	Tube	1/2 oz.
PENA-4	PENA13-4	PENE-4	PENHT-4	Squeeze Bottle	4 oz.
P8A	PENA13-8	PENE-8	PENHT-8	Squeeze Bottle	8 oz.
PENACARTRIDGE	PENA13CARTRIDGE	—	PENHT1LB	Cartridge	1 lb.*
PENA-QT	PENA13-QT	PENE-QT	—	Plastic Tub	1 Quart
PENA-GAL	PENA13-GAL	PENE-GAL	PENHTGAL	Can	1 Gallon
PENA-5GAL	PENA13-5GAL	PENE-5GAL	—	Pail	5 Gallons
PENA-55GAL	PENA13-55GAL	PENE-55GAL	—	Drum	55 Gallons

* 1 lb. cartridge will fit standard caulking guns.
† Not UL Listed.

B38-0305-00 Wire Brush

Blue highlighted items are industry standard and most frequently ordered.

TYPE BDSC

Duct Sealing Compound

BDSC Asbestos Free Sealer is a gray, permanently soft, nontoxic compound which will adhere to most clean, dry surfaces. BDSC Sealer will not adversely affect other plastic materials or corrode metals. It also has no adverse effect on human skin.

Supplied in a convenient block shape overwrapped with release paper and bagged in a clear reentry type PVC bag with application data.

Details:

- Unlimited shelf life
- Dielectric strength approximately 100V/mil. using ASTM D149-64
- Nontoxic and nonirritating
- Easily shaped by hand to suit the application
- 100% nonvolatile solids including nondrying, synthetic polymers with inert mineral fibers
- Recommended working range when applying is 20 degrees F. Tolerance range is 40 degrees to 194 degrees F. Will not sag at 280 degrees F when under such exposure for brief periods
- Permanent pliable and non-cracking. May be painted immediately

Catalog Number	Block Size	Carton Quantity
BDSC1	1 lb.	50 lbs.
BDSC5	5 lbs.	50 lbs.

TYPE HS-T-PF

THIN WALL HEAT SHRINK TUBING

Cross-Linked Polyolefin

6 Inch Lengths

Type HS-T-PF is a flexible thin wall, flame retardant heat shrink tubing made of cross-linked polyolefin. The 2:1 shrink ratio allows for faster shrink recovery, covering wire sizes: #18 AWG to 300 kcmil. Operating temperatures from –55° C to 135° C with a shrink temperature of 120° C.

Meets SAE-AMS-DTL-2305315
1000 V

Catalog Number	Nominal Diameter Inches	Min. Exp. I.D. In.	Max. Recov. I.D. In.	Nom. Wall Thickness In.	Conductor Range	Pieces per Package	
						# Pieces Black	# Pieces Each Color
HSM116T6PF26	1/16	0.06	0.03	0.02	#18	8	3
HSB116T6PF26	1/16	0.06	0.03	0.02	#18	26	0
HSM332T6PF24	3/32	0.09	0.05	0.02	#18-16	6	3
HSB332T6PF24	3/32	0.09	0.05	0.02	#18-16	24	0
HSM18T6PF20	1/8	0.12	0.06	0.02	#18-14	2	3
HSB18T6PF20	1/8	0.12	0.06	0.02	#18-14	20	0
HSM316T6PF18	3/16	0.19	0.09	0.02	#18-12	6	2
HSB316T6PF18	3/16	0.19	0.09	0.02	#18-12	18	0
HSM14T6PF14	1/4	0.25	0.12	0.18	#14-10	2	2
HSB14T6PF14	1/4	0.25	0.12	0.18	#14-10	14	0
HSM38T6PF12	3/8	0.38	0.19	0.02	#8-6	6	1
HSB38T6PF12	3/8	0.38	0.19	0.02	#8-6	12	0
HSM12T6PF10	1/2	0.50	0.12	0.02	#6-2	4	1
HSB12T6PF10	1/2	0.50	0.12	0.02	#6-2	10	0
HSM34T6PF8	3/4	0.75	0.38	0.02	#1-3/0	2	1
HSB34T6PF8	3/4	0.75	0.38	0.02	#1-3/0	8	0
HSM100T6PF7	1	1.00	0.50	0.18	2/0-300	1	1
HSB100T6PF7	1	1.00	0.50	0.18	2/0-300	7	0

HSB series — all black

HSM series — multiple colors: black, blue, clear, green, red, white, yellow

HSB11612T6PF14	1/16, 3/32, 1/8, 3/16, 1/4, 3/8, 1/2	—	—	14	0
HSB38100T6PF8	3/8, 1/2, 3/4, 1"	—	—	8	0

Multiple diameter packages contain two pieces of each size listed: Black only.

Blue highlighted items are industry standard and most frequently ordered.

TYPE HS-T-PF

THIN WALL HEAT SHRINK TUBING

Cross-Linked Polyolefin

4 Foot Reels

Type HS-T-PF is a flexible thin wall, flame retardant heat shrink tubing made of cross-linked polyolefin. The 2:1 shrink ratio allows for faster shrink recovery, covering wire sizes: #18 AWG to 300 kcmil. Operating temperatures from –55° C to 135° C with a shrink temperature of 120° C.

Meets SAE-AMS-DTL-2305315
600 VOLTS

Specify Color Code in Third Position of Catalog Number:

Example: HS**C**316T48PF

B : BLACK
BL: BLUE
C : CLEAR
G : GREEN
R : RED
W : WHITE
Y : YELLOW

Catalog Number	Nominal Diameter Inches	Min. Exp. I.D. In.	Max. Recov. I.D. In.	Nom. Wall Thickness In.	Conductor Range
HS_116T48PF	1/16	0.06	0.03	0.018	#18
HS_332T48PF	3/32	0.09	0.05	0.020	#18 - 16
HS_18T48PF	1/8	0.12	0.06	0.020	#18 - 14
HS_316T48PF	3/16	0.19	0.09	0.020	#18 - 12
HS_14T48PF	1/4	0.25	0.12	0.180	#14 - 10
HS_38T48PF	3/8	0.38	0.19	0.020	#8 - 6
HS_12T48PF	1/2	0.50	0.12	0.020	#6 - 2
HS_34T48PF	3/4	0.75	0.38	0.020	#1 - 3/0
HS_100T48PF	1	1.00	0.50	0.180	2/0 - 300
HS_150T48PF	1-1/2	1.50	0.75	0.180	350 - 750
HS_200T48PF	2	2.00	1.00	0.180	250 - 500

Blue highlighted items are industry standard and most frequently ordered.

TYPE HS-T-PF

THIN WALL HEAT SHRINK TUBING

Cross-Linked Polyolefin

25 Foot Reels

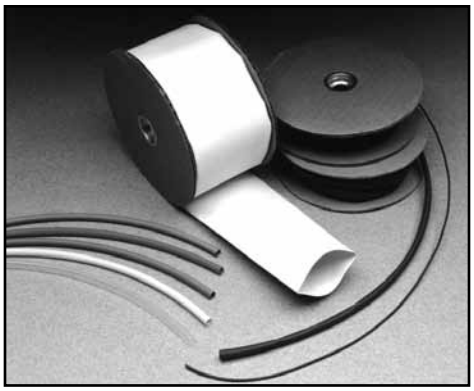

Type HS-T-PF is a flexible thin wall, flame retardant heat shrink tubing made of cross-linked polyolefin. The 2:1 shrink ratio allows for faster shrink recovery, covering wire sizes: #18 AWG to 300 kcmil. Operating tem-peratures from –55° C to 135° C with a shrink temperature of 120° C.

Meets SAE-AMS-DTL-2305315
600 VOLTS

Specify Color Code in Third Position of Catalog Number:

Example: HS**C**116T300PF

B : BLACK
BL: BLUE
C : CLEAR
G : GREEN
R : RED
W : WHITE
Y : YELLOW

Catalog Number	Nominal Diameter Inches	Min. Exp. I.D. In.	Max. Recov. I.D. In.	Nom. Wall Thickness In.	Conductor Range
HS_116T300PF	1/16	0.06	0.03	0.018	#18
HS_332T300PF	3/32	0.09	0.05	0.020	#18 - 16
HS_18T300PF	1/8	0.12	0.06	0.020	#18 - 14
HS_316T300PF	3/16	0.19	0.09	0.020	#18 - 12
HS_14T300PF	1/4	0.25	0.12	0.180	#14 - 10
HS_38T300PF	3/8	0.38	0.19	0.020	#8 - 6
HS_12T300PF	1/2	0.50	0.12	0.020	#6 - 2
HS_34T300PF	3/4	0.75	0.38	0.020	#1 - 3/0
HS_100T300PF	1	1.00	0.50	0.180	2/0 - 300

Blue highlighted items are industry standard and most frequently ordered.

TYPE HS-H-PF

HEAVY WALL HEAT SHRINK TUBING

Cross-Linked Polyolefin

Cut Lengths and 4 Foot Sticks

Type HS-H-PF is a heavy wall, flame retardant heat shrink tubing made of cross-linked polyolefin. The shrink ratio is 3:1, and the inside diameter is coated with an adhesive sealant to protect against moisture and corrosion. UL486D Listed for direct burial applications. Accommodates #14 AWG - 500 kcmil conductors. Operating temperatures from –55° C to 135° C with a shrink temperature of 120° C.

Meets SAE-AMS-DTL-2305315
1000 V

Catalog Number	Length	Nominal Diameter Inches	Min. Exp. I.D. In.	Max. Recov. I.D. In.	Nom. Wall Thickness In.	Conductor Range	Number of Pcs. Per Package
HSB35H3PF25	3"	0.35	0.35	0.15	0.07	#14-10	25
HSB35H6PF25	6"	0.35	0.35	0.15	0.07	#14-10	25
HSB35H48PF5	4"	0.35	0.35	0.15	0.07	#14-10	5
HSB34H6PF10	6"	0.75	0.75	0.22	0.09	#6-2	10
HSB34H9PF10	9"	0.75	0.75	0.22	0.09	#6-2	10
HSB34H48PF5	4"	0.75	0.75	0.22	0.09	#6-2	5
HSB110H6PF5	6"	1.10	1.10	0.40	0.12	#1-3/0	5
HSB110H9PF5	9"	1.10	1.10	0.40	0.12	#1-3/0	5
HSB110H48PF5	4"	1.10	1.10	0.40	0.12	#1-3/0	5
HSB150H9PF3	9"	1.50	1.50	0.50	0.16	2/0-350	3
HSB150H12PF3	12"	1.50	1.50	0.50	0.16	2/0-350	3
HSB150H48PF5	4"	1.50	1.50	0.50	0.16	2/0-350	5
HSB200H9PF2	9"	2.00	2.00	0.75	0.16	250-500	2
HSB200H12PF2	12"	2.00	2.00	0.75	0.16	250-500	2
HSB200H48PF2	4"	2.00	2.00	0.75	0.16	250-500	2

Available in black only.

TYPE HSIC - FR

HEAVY WALL HEAT SHRINKABLE END CAP

UL LISTED TO 600V

Type HSIC-FR, Heat Shrink Insulating End Cap Fire Retardant is a heavy wall, fire retardant end cap made of cross-linked thermally stabilized black polyolefin. Used to insulate exposed conductors in energized applications. The 3:1 shrink ratio offers greater range, accommodating copper wire sizes, #8 AWG thru 2500+ kcmil. Performs effectively over lead, aluminum, steel, polyethylene, EPR, and PVC jacketed materials. Blue thermal chromatic lines disappear indicating correct installation temperature and provide inspectability. I.D. adhesive provides superior moisture and weather resistant characteristics.

Features & Benefits

- Minimum 28 Oxygen index, UL94-VO rated.
  - ◊ Self-extinguishing flame retardant properties.
- 3:1 shrink ratio
  - ◊ Minimum inventory required.
- Thermal chromatic lines
  - ◊ Indicate proper installation.
- Low shrink temperature, 150°C
  - ◊ Only requires common hot air gun to apply.
- Meets sealing requirements: ANSI-C119.1, UL486D
  - ◊ Weather and moisture resistant.

1. Slide the HSIC-FR end cap onto the cable and hold in place using forefinger or thumb.

2. Beginning at closed end apply heat, blue thermochromatic lines will begin to disappear at 150° C. Gradually, move heat source to open end and around cap. Once lines are no longer visible and adhesive flows out of open end, discontinue heating.

3. HSIC-FR end cap installed on cable.

Catalog Number	600V Cable		Internal Diameter		Wall Thickness		Length ± 20%		Number of Pcs. per Package
	Code	Flex	(Min) Exp.	(Max) Rec	Exp.	Rec. ± 20%	Exp.	Rec.	
HSIC8-1FR	#8-#1	#8-#4	0.50	0.16	0.03	0.08	3.00	2.50	10
HSIC4-40FR	#4-4/0	#4-2/0	0.75	0.24	0.03	0.08	3.50	2.50	10
HSIC10-500FR	1/0-500 kcmil	#1-313.1 kcmil	1.10	0.35	0.04	0.12	4.00	3.00	5
HSIC30-1000FR	3/0-1000 kcmil	2/0-646 kcmil	1.50	0.47	0.05	0.16	4.50	3.25	5
HSIC200FR	300-1750 kcmil	250-1111 kcmil	2.00	0.63	0.05	0.16	4.50	3.50	5
HSIC350FR	1250 kcmil (min)	—	3.50	1.18	0.05	0.16	5.00	4.50	5

Blue highlighted items are industry standard and most frequently ordered.

TYPE BSC

Push-On Cable End Cap Containing "Super-Seal" Waterproofing Mastic

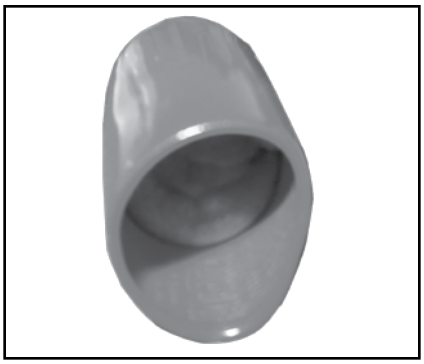

Waterproofing selas work instantly and stay in place with tape. The maximum conductors shown in the table are based upon caps that have been stretched when making the installations. The same items can be effectively installed on small conductors since the mastic has adhesive qualities when pressed by firmly pushing the caps against the conductor ends.

Bagged in clear polyethylene with an information tag. Shelf service life is indefinite since Super-Seal is non-hardening. Super-Seal has no adverse effect on cable insulation.

Additional intermediate sizes and larger sizes through 4.88" O.D. can also be supplied on special orders to specific color codes. Contact factory for information.

Material:
600V PVC

Catalog Number	Max. Conductor (O.D. based on a Snug Cap Fit)	Cap Color Code	Pieces per Bag	Standard Box Quantity
BSC687	0.75	Red	3	300
BSC1000	1.06	Orange	3	300
BSC1125	1.21	Yellow	3	300
BSC1375	1.47	Gray	3	300
BSC1500	1.63	Black	3	300
BSC1875	1.94	Yellow	3	150
BSC2000	2.06	Black	3	150
BSC2375	2.44	Blue	3	150
BSC2500	2.56	Black	3	150
BSC25002.5	2.56	Black	3	150

Blue highlighted items are industry standard and most frequently ordered.

TYPE BPC

Force Fit Cable Caps

BPC caps are sized to provide force fits on the listed diameters of conductors. Caps are color coded as indicated and are packaged in clear polyethylene bags which show size and application data. Caps conform to the conductor shape and will remain in place without using tape. A moisture seal cannot always be assured using this method however. All caps are 1.5" tall.

Additional intermediate sizes and larger sizes through 4.88" O.D. can also be supplied on special orders to specific color codes. Contact factory for information.

Material:
600V PVC

Catalog Number	Conductor O.D. Range (inches)	Conductor Size Ratings (Based on 600 V XLP Insulation)		Cap Color Code	Pieces per Bag	Standard Box Quantity
		Concentric & Compressed Str.	Compact Strand			
BPC312	.32 - .38	6 & 4	6, 4 & 2	Orange	100	500
BPC375	.38 - .44	4 & 2	2	Red	100	500
BPC437	.44 - .51	1	1 & 10	Pink	100	500
BPC500	.51 - .55	1/0	2/0	Yellow	100	500
BPC562	.57 - .65	2/0 & 3/0	3/0	Pale Blue	100	500
BPC625	.63 - .70	-	4/0	Pink	100	500
BPC687	.69 - .75	4/0	250	Red	100	500
BPC750	.76 - .84	250 & 300	300 & 350	Black	100	500
BPC843	.85 - .93	350	400	Brown	50	250
BPC875	.88 - .96	400	500	Maroon	50	250
BPC1000	1.00 - 1.08	500	600	Orange	50	250
BPC1125	1.13 - 1.21	600	750	Yellow	50	250
BPC1187	1.19 - 1.27	750	-	Black	50	250
BPC1250	1.30 - 1.38	-	1000	Red	50	250
BPC1375	1.38 - 1.47	1000	-	Gray	50	250
BPC1500	1.53 - 1.63	1250	-	Black	40	200
BPC1687	1.70 - 1.80	1500	-	Pale Blue	40	200
BPC1875	1.90 - 2.04	2000	-	Yellow	40	200
BPC2000	2.02 - 2.18	-	-	Orange	40	200
BPC2375	2.39 - 2.55	-	-	Blue	40	200
BPC2500	3.50 - 3.66	-	-	Black	40	200
BPC3500	3.50 - 3.66	-	-	Red	40	200

Blue highlighted items are industry standard and most frequently ordered.

TYPE HSC-FR

VISI-SHRINK™

Fire Retardant Clear Heat Shrink Tubing

UL Recognized to 600V

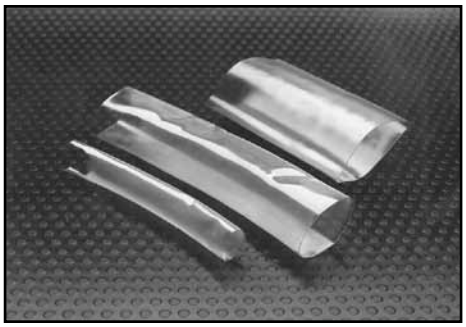

Type HSC-FR is a flexible polyvinyl chloride clear heat-shrink tubing. Excellent flame retardant properties and a 2:1 shrink ratio, the VISI-SHRINK tubing enables inspectors to read die index embossments on installed connectors easily. UL Recognized, 105° C, 600V, the operating temperature from –20° C to 105° C with a shrink temperature of 135° C.

Features & Benefits

- UL 224, VW-1 Rated
  - ◊ Self-extinguishing flame retardant properties.
- Clear Tubing
  - ◊ Allows inspection of die index embossment and shiner after installation is complete. Should any corrosion occur it will be visible during inspection.
- Low Shrink Temperature
  - ◊ Only requires common hot air guns to apply.
- Meets MIL-M-23053/Z-206C

Catalog Number	I.D. Expanded	I.D. After Recovery	Wall Thickness	Conductor Range		Standard Reel Size (Feet)
				Code	Flex	
HSC18FR	0.13	0.06	0.03	#16-#14	#16-#14	50
HSC18FR250	0.13	0.06	0.03	#16-#14	#16-#14	250
HSC14FR	0.25	0.13	0.03	#12-#8	#12-#10	50
HSC14FR250	0.25	0.13	0.03	#12-#8	#12-#10	250
HSC38FR	0.38	0.19	0.03	#6-#4	#8-#6	50
HSC38FR250	0.38	0.19	0.03	#6-#4	#8-#6	250
HSC12FR	0.50	0.25	0.03	#4-#1	#6-#4	50
HSC12FR250	0.50	0.25	0.03	#4-#1	#6-#4	250
HSC34FR	0.75	0.38	0.03	1/0-3/0	#2-1/0	50
HSC34FR250	0.75	0.38	0.03	1/0-3/0	#2-1/0	250
HSC100FR	1.00	0.50	0.04	4/0-300	1/0-4/0	25
HSC100FR100	1.00	0.50	0.04	4/0-300	1/0-4/0	100
HSC112FR	1.50	0.75	0.04	350-750	250-500	25
HSC112FR100	1.50	0.75	0.04	350-750	250-500	100
HSC200FR	2.00	1.00	0.05	800-1000	500-750	25
HSC200FR100	2.00	1.00	0.05	800-1000	500-750	100

NOTES:
1. Shrink temperature is 135° C (275° F).
2. For best results move heat gun along the length of heat shrink to avoid concentrations.
3. To extend useful life, store material below 70°F.
4. For additional Heat Shrinkable Tubing see "URD" section Type RYAC and RK169-2, RK170-2 in this section.

Blue highlighted items are industry standard and most frequently ordered.

TYPE HS-FR

THIN WALL HEAT SHRINK

Fire Retardant
Heat Shrink Tubing

UL Recognized to 600V

Type HS-FR is a flexible polyvinyl chloride thin wall heat shrink. Offering insulating, color identification and strain relieving properties for terminations and splices. The 2:1 shrink ratio allows for faster shrink recovery, covering wire sizes: #16 AWG to 1000 kcmil. UL Recognized, 105° C, 600V, operating temperatures from –20° C to 105° C with a shrink temperature of 135°.

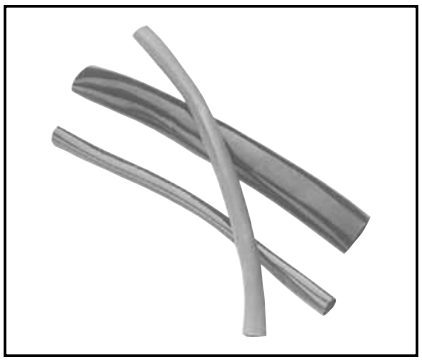

How to Order:

Example: **HSB18FR**

B	-	Black
BLU	-	Blue
G	-	Green
R	-	Red
W	-	White
Y	-	Yellow

Features & Benefits

- UL 224, VW-1 Rated
  ◊ Self-extinguishing flame retardant properties.
- Multi-use Tubing
  ◊ Insulate, strain relief.
- Easy Identification
  ◊ Available in wide range of colors.
- Low Shrink Temperature
  ◊ Only requires common hot air guns to apply.
- Meets MIL-M-23053/Z-206C

Catalog Number	I.D. Expanded	I.D. After Recovery	Wall Thickness	Conductor Range		Standard Reel Size (Feet)
				Code	Flex	
HS_18FR	0.125	0.062	0.025	#16 - #14	#16 - #14	50
HS_18FR250	0.125	0.062	0.025	#16 - #14	#16 - #14	250
HS_14FR	0.250	0.125	0.025	#12 - #8	#12 - #10	50
HS_14FR250	0.250	0.125	0.025	#12 - #8	#12 - #10	250
HS_38FR	0.375	0.187	0.025	#6 - #4	#8 - #6	50
HS_38FR250	0.375	0.187	0.025	#6 - #4	#8 - #6	250
HS_12FR	0.500	0.250	0.025	#4 - #1	#6 - #4	50
HS_12FR250	0.500	0.250	0.025	#4 - #1	#6 - #4	250
HS_34FR	0.750	0.375	0.030	1/0 - 3/0	#2 - 1/0	50
HS_34FR250	0.750	0.375	0.030	1/0 - 3/0	#2 - 1/0	250
HS_100FR	1.000	0.500	0.035	4/0 - 300	1/0 - 4/0	25
HS_100FR100	1.000	0.500	0.035	4/0 - 300	1/0 - 4/0	100
HS_112FR	1.500	0.750	0.040	350 - 750	250 - 500	25
HS_112FR100	1.500	0.750	0.040	350 - 750	250 - 500	100
HS_200FR	2.000	1.000	0.045	800 - 1000	500 - 750	25
HS_200FR100	2.000	1.000	0.045	800 - 1000	500 - 750	100

NOTES:

1. Shrink temperature is 135° C (275° F).
2. For best results move heat gun along the length of heat shrink to avoid concentrations.
3. To extend useful life, store material below 70° F.
4. For additional Heat Shrinkable Tubing see "URD" section Type RYAC and RK169-2, RK170-2 in this section.

Blue highlighted items are industry standard and most frequently ordered.

MISCELLANEOUS ACCESSORIES

TYPE BHSG1100

HEAT GUN

250° - 1100° F (121° - 650° C)

Multi-purpose, low cost heat gun has an electronic variable thermal control dial. BHSG1100 meets the requirements of UL. It has a temperature range of 250° - 1100° F (121° - 650° C). 2 speed motor. Built-in safety stand heat guard included. Professional heat gun and accessories are recommended for all of your BURNDY heat shrink applications.

TABLE OF CONTENTS - UNIRAP™

Cable Tie Features and Specs	G-2 - G-4
Military Spec Cable Ties	G-5
UNIRAP™ Standard Cable Ties	G-6 - G-7
UNIRAP™ Type UG Universal Ties	G-8 - G-9
UNIRAP™ Releasable Cable Ties	G-10
UNIRAP™ Indentifcation Cable Ties	G-11
Type 145PTAG - Blank Tag for Marking	G-11
UNIRAP™ Mounting Hole Cable Ties	G-12
UNIRAP™ Stainless Steel Barb Ties	G-13 - G-14
UNIRAP™ Halar® Ties	G15
UNIRAP™ Tefzel® Ties	G-15
UNIRAP™ Heat Stabilized Ties	G-16
Type TFV-B Hook & Loop Straps	G-17
Mounting Bases 4-Way & 2-Way	G-18
Cable Hangers	G-19
UNIRAP™ Stainless Steel Cable Ties	
304 Stainless Steel (bare)	G-20
316 Stainless Steel (bare)	G-21
304 Stainless Steel (Fully Coated)	G-22
316 Stainless Steel (Fully Coated)	G-23
304 Stainless Steel (Partially Coated)	G-24
316 Stainless Steel (Partially Coated)	G-25
Cable Tie Variety Pack	G-26
Cable Tie Tools	G-26

Blue highlighted items are industry standard and most frequently ordered.

UNIRAP™

NYLON CABLE TIES

UNIRAP™ cable ties are fabricated of one piece Nylon with no metal parts. The straps are tough, resilient, lightweight and abrasion resistant. They offer high tensile strength and are chemically resistive to solvents, alkalies, oils, grease and diluted acids. Self-locking, they secure without twisting or leaving sharp projections.

Compact heads and pre-bent tips facilitate cable bundling in a minimum of time and space. UNIRAP™ cable ties are designed for both field and production line use and may be installed easily by hand.

BURNDY® cable ties consist of three components: strap, head, and tail. These components are specifically designed to function together to make BURNDY® UNIRAP™ cable ties superior in quality and performance. Shelf life of 5 years, when stored in original packaging.

Component

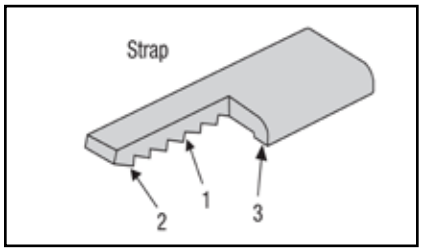

Precision Engineering

1. Includes load bearing **serrations**.
2. Features **flats** between the serrations.
3. Features the **double outer rail system**.

Enhanced Performance

1. Serrations provide complete adjustability within the fastening range.
2. Flats reduce stress concentrations and help make the tie stronger.
3. Smooth rails promote low drag, as well as minimize chafing.

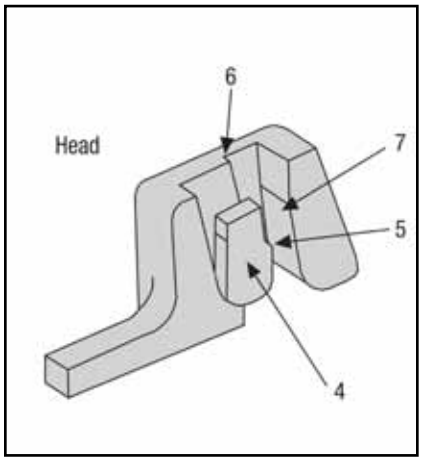

4. The **pawl** is integrally formed with the head.
5. The **pawl** is stepped in order to wedge against the serrations in the strap to form the lock.
6. The **shoulders**, or the sides of the head, guide the strap and prevent it from disengaging from the pawl during loaded conditions.
7. The **back** supports the strap during the wedging of the lock formation.

4. The locking unit will not disengage. It also promotes low insertion with high pull out force for very easy installation.
5. The tie's ultimate strength achieves optimum levels.
6. Promotes cable tie strength, endurance and longevity.
7. Ensure optimum locking capability.

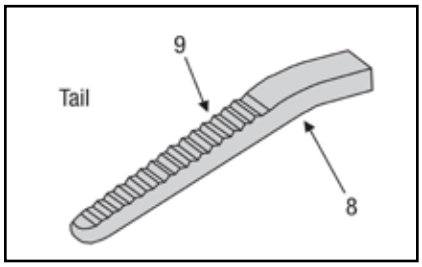

8. Features a **bent tip**.
9. Includes a **ribbed grip**.

8. Easy pick-up for installers, which leads to fast assembly.
9. Allows for easy, no-slip grip.

Blue highlighted items are industry standard and most frequently ordered.

Available Materials

Nylon 6/6 — General Purpose
General purpose nylon 6/6 features light weight, high strength and a wide temperature range. It is halogen free so it does not release dangerous gases, such as chlorine, bromine, fluorine and iodine when burned. Nylon 6/6 is hygroscopic, and therefore, absorbs or releases moisture depending on its environment. Thus, the moisture level of the material will affect tensile strength, stiffness and elongation of the product.

Nylon 6/6 — Heat Stabilized
With similar properties and benefits as nylon 6/6, products manufactured with heat stabilized nylon 6/6 material have a chemical stabilizer added for higher continuous temperature applications.

Nylon 6/6 — UV Stabilized
Chemical inhibitors are used to give nylon 6/6 material added properties to fight against premature aging of products due to the effects of ultraviolet rays.

Nylon 6/6 — UV Stabilized
(2% Carbon for Military Specification)
The physical properties of this material include carbon, which acts as a UV stabilizer, prolonging the life of the product under ultraviolet conditions. It also allows cable ties to meet the particular military specification for cable ties.

Nylon 6/6 — V0 Flame Retardant
This material meets UL 94V-0 flammability requirements. Flame retardant additives generally reduce tensile strength when compared to general-purpose nylon 6/6, but this resin has been formulated to minimize such effects.

Nylon 6/6 — High Impact
Impact modifiers are added to increase flexibility. High impact nylon 6/6 has stable tensile strength due to its reduced influence from moisture. It is excellent for high vibration applications, as within the aircraft and automobile industries and performs better than nylon 6/6 against ultraviolet rays. Good for outdoor use.

Polypropylene
Polypropylene is used in environments where chemical effects on nylon are a concern. It is not affected by inorganic acids (hydrochloric), polyhydric alcohols (ethyleneglycol), neutral salts (sodium chloride) and basic salts (sodium bicarbonate). Polypropylene also resists a number of other chemicals with good results, although it has lower tensile strength than nylon 6/6 (about half). Polypropylene has good UV resistance.

Tefzel®
Although about two-thirds the strength of nylon 6/6, Tefzel is resistant to a wide range of chemicals, such as concentrated hydrofluoric and sulfuric acids. It is also a low water absorbing material, therefore, is not adversely affected by water. Tefzel is radiation resistant up to 100 megarads and meets the fire and smoke requirements of IEEE 383. Tefzel also withstands high temperatures and ultraviolet light exposure. Products made from Tefzel material also have non-outgassing properties for zero gravity applications.

Halar®
Halar is similar to Tefzel in performance and benefits. Halar is recognized for its low smoke density attribute when burned. This makes products made out of Halar more desirable for use in areas where smoke generation is a concern, as when bundling wire and cable in air handling spaces.

Material Specifications

Material	Continuous* Operating Temperature Max.	Min.	Tensile Strength at 73° F Dry as Molded ASTM D-638 (PSI)	UL Flame Rating	Oxygen Index %	Gamma Radiation Resistance	UV Resistance	Military, Federal, ASTM, and FDA Specifications
Nylon 6/6 — General Purpose (CT)	185° F 85° C	–40° F –40° C	12,000	94V-2	28	1 x 10^5 Rads	Poor	ASTM D-4066PA0111 FDA CFR177.1500
Nylon 6/6 — Heat Stabilized (CTHS)	220° F 105° C	–40° F –40° C	12,000	94V-2	26	1 x 10^5 Rads	Poor	ASTM D-4066PA0121
Nylon 6/6 — UV Stabilized (O)	185° F 85° C	–40° F –40° C	12,000	94V-2	26	1 x 10^5 Rads	Good	ASTM D4066PA0191
Nylon 6/6 — 2% Carbon UV Stabilized (OO)	220° F 105° C	–40° F –40° C	12,000	94V-2	26	1 x 10^5 Rads	Good	ASTM D-4066PA0181 MS3367/8
Nylon 6/6 — Flame Retardant (CTV)	185° F 85° C	–40° F –40° C	10,800	94V-0	34	1 x 10^5 Rads	Poor	ASTM D-4066PA0110
Nylon 6/6 — High Impact	185° F 85° C	–40° F –40° C	8,800	94-HB	19	1 x 10^5 Rads	Good	ASTM D-4066PA0150
Polypropylene — Chemical Resistant (CTPP)	185° F 85° C	–40° F –40° C	3,400	94-HB	N/A	1 x 10^5 Rads	Good	ASTM D-4101PP0320 FDA CFR177.1520
Nylon 12 — UV Stabilized	176° F 80° C	–40° F –40° C	5,800	94-HB	N/A	9 x 10^6 Rads	Good	ASTM D-4066PA411
Tefzel® (CTZ)	302° F 150° C	–50° F –46° C	5,800	94V-0	30	2 x 10^8 Rads	Excellent	UL2043 Grade 1 ASTM D-3159 Type 1
Halar® (CTH)	284° F 140° C	–50° F –46° C	6,100	94V-0	52	2 x 10^8 Rads	Excellent	ASTM D-3275 Type 3 FDA CRF177.1380

* Elevated temperatures, over time, will affect materials' properties such as tensile strength, stiffness, elongation and appearance.

BURNDY® recommends the evaluation of cable ties in the actual application to determine the suitability of the tie for that application.

Tefzel® is a registered trademark of E.I. DuPont.
Halar® is a registered trademark of Ausimont Chemical Co.

Blue highlighted items are industry standard and most frequently ordered.

Material Performance Guide

Selection	Nylon 6/6 General Purpose	Nylon 6/6 Heat Stab.	Nylon 6/6 UV Stab.	Nylon 6/6 2% Carbon UV Stab.	Nylon 6/6 Flame Ret. V0	Nylon 6/6 High Impact	Poly-propylene	Nylon 12 UV Stab.	Tefzel®	Halar®
Tensile Strength	8	8	8	9	7	8	2	4	5	5
High Temp.	2	3	2	2	2	2	2	1	10	10
Flammability	5	5	5	5	10	2	2	2	10	10
UV Resistance	1	1	5	8	1	2	5	3	10	10
Radiation	3	3	3	3	3	3	6	3	10	10
Chemical	6	6	6	6	6	6	8	8	10	10
— Hydrocarbons	8	8	8	8	8	8	6	8	10	10
— Chlorinated	6	6	6	6	6	6	3	8	10	10
— Hydrocarbons	2	2	2	2	2	2	8	5	10	10
— Acids-Bases	6	6	6	6	6	6	8	6	10	10
— Salts	3	3	3	3	3	3	10	8	10	10
Relative Cost	Low	Low	Med.	Med.	Med.	Med.	Med.	Med.	High	High

1 = Least Recommended 10 = Most Recommended

The following chart is meant to help you understand BURNDY's cable tie catalog numbering system. Not every cable tie is available in every listed option. See below Catalog Numbering System Charts or contact BURNDY® Customer Service for more information.

Gray bars contain catalog number examples.

Type	Tensile	Bundle Dia.	Feature	Package	Color
CT	50	175		C	
CT = Nylon 6/6 Standard CTAS = Aerial Support CTH = Halar ® CTZ = Tefzel ® CTHS = Nylon 6/6 Heat Stabilized CTV = Nylon 6/6 Flame Retardant UL94V-0 CTPP = Polypropylene CTSS = Stainless Steel	18 = 18 lbs. 30 = 30 lbs. 40 = 40 lbs. 50 = 50 lbs. 100 = 100 lbs 110 = 110 lbs. 120 = 120 lbs. 175 = 175 lbs. 225 = 225 lbs. 250 = 250 lbs. 450 = 450 lbs. 500 = 500 lbs. 675 = 675 lbs. 700 - 700 lbs. 800 = 800 lbs. 900 = 900 lbs.	075 = 3/4" 087 = 7/8" 100 = 1" 125 = 1-1/4" 137 = 1-3/8" 150 = 1-1/2" 175 = 1-3/4" 200 = 2" 225 = 2-1/4" 250 = 2-1/2" 300 = 3" 325 = 3-1/4" 350 = 3-1/2" 400 = 4" 425 = 4-1/4" 500 = 5" 600 = 6" 700 = 7" 750 = 7-1/2" 800 = 8" 900 = 9" 1000 = 10" 1100 = 11" 1200 = 12" 1300 = 13" 1400 = 14"	EPR = Extended Pawl Releasable ID = Single Head ID ID2 = Double Head ID ID3 = Triple Head ID FL = ID Flag MH4 = Mounting Hole #4 MH6 = Mounting Hole #6 MH8 = Mounting Hole #8 MH10 = Mounting Hole #10 MH14 = Mounting Hole #14 PM = Push Mount Tie PML = Push Mount Tie w/Louvers PMW = Push Mount Tie w/Wing R = Releasable Tie LP = Low Profile Tie PS = Positive Stop SSB = Stainless Steel Barb FC304 = Fully Coated 304 FC316 = Fully Coated 316 PC304 = Partially Coated 304 PC316 = Partially Coated 316	V = 5 X = 10 Q = 25 L = 50 C = 100 B = 250 D = 500 M = 1000	1 = Brown 2 = Red 3 = Orange 4 = Yellow 5 = Green 6 = Blue 7 = Purple 8 = Gray None = Natural 10 = White 11 = Telco Gray 0 = UV Black[1] 00 = UV Black[2] 02 = Red 20 = Black

[1]Material: Nylon 6/6 — UV Stabilized [2]Material: Nylon 6/6 — 2% Carbon UV Stabilized (Mil. Spec.)

Type	Tensile	Bundle Dia.	Feature	Package	Color
CTB	100	RA	4	C	0
CTB = Cable Tie Base	075 = 3/4" 125 = 1-1/4" 150 = 1=1/2"	RA = Rubber Adhesive AA = Acrylic Adhesive S = Screw Mounted	2 = 2 way 4 = 4 way	L = 50 C = 100 D = 500 M = 1000	0 = UV Black

Blue highlighted items are industry standard and most frequently ordered.

Military Specification UNIRAP™ Cable Ties

The BURNDY® cable ties shown below meet the requirements of SAE AS23190A (formerly MIL-S-23190) in accordance with specification MS3367, MS3368, and QPL-23190.

Natural Cable Ties

Mil Spec	Distributor Pack Catalog Number	Bulk Pack Catalog Number	Description (Bundle Dia. - Tensile Strength)
MS3367-1-9	CT50175C	CT50175M	1.75" - 50 lbs.
MS3367-2-9	CT50400C	CT50400M	4" - 50 lbs.
MS3367-3-9	CT120400L	CT120400D	4" - 120 lbs.
MS3367-3-9	CT175400Q	N/A	4" - 175 lbs.
MS3367-3-9	CT175600Q	N/A	6" - 175 lbs.
MS3367-4-9	CT18075C	CT18075M	0.75" - 18 lbs.
MS3367-5-9	CT30125C	CT30125M	1.25" - 30 lbs.
MS3367-6-9	CT120900L	CT120900D	9" - 120 lbs.
MS3367-6-9	CT175900Q	N/A	9" - 175 lbs.
MS3367-7-9	CT50300C	CT50300M	3" - 50 lbs.

UV Resistant Black Cable Ties

Mil Spec	Distributor Pack Catalog Number	Bulk Pack Catalog Number	Description (Bundle Dia. - Tensile Strength)
MS3367-1-0	CT50175C00	CT50175M00	1.75" - 50 lbs.
MS3367-2-0	CT50400C00	CT50400M00	4" - 50 lbs.
MS3367-3-0	CT120400L00	CT120400D00	4" - 120 lbs.
MS3367-3-0	N/A	N/A	4" - 175 lbs.
MS3367-3-0	CT175600Q00	N/A	6" - 175 lbs.
MS3367-4-0	CT18075C00	CT18075M00	0.75" - 18 lbs.
MS3367-5-0	CT30125C00	CT30125M00	1.25" - 30 lbs.
MS3367-6-0	CT120900L00	CT120900D00	9" - 120 lbs.
MS3367-6-0	CT175900Q00	N/A	9" - 175 lbs.
MS3367-7-0	CT50300C00	CT50300M00	3" - 50 lbs.

Natural Identification Cable Ties

Mil Spec	Distributor Pack Catalog Number	Bulk Pack Catalog Number	Description (Bundle Dia. - Tensile Strength)
MS3368-1-A	CT50175IDC	N/A	1.75" - 50 lbs.
MS3368-2-A	CT50400IDC	N/A	4" - 50 lbs.
MS3368-3-C	CT50175ID2L	N/A	1.75" - 50 lbs. Double Strap
MS3368-4-D	CT50175ID3L	N/A	1.75" - 50 lbs. Triple Strap
MS3368-5-E	CT18075IDC	N/A	0.75" - 18 lbs.

Blue highlighted items are industry standard and most frequently ordered.

UNIRAP™

STANDARD CABLE TIES

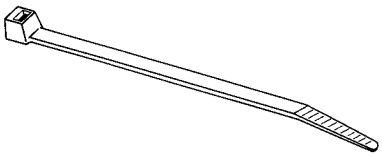

UL 62275
Type 2 & 21 All items on this page

18 Lb. Minimum Tensile Strength

Standard Package Catalog Number	Material	Maximum Bundle Diameter Inches[mm]	Minimum Tensile Strength Lbs.	Length Inches	Width Inches [mm]	Installation Tool	Bulk Package Catalog Number
CT18075C	Natural Nylon 6/6	0.75 [19]	18	4.1	0.10 [3]	TWT1, MK7, CTT50	CT18075M
CT18075C0	Black Nylon 6/6 UV						CT18075M0
CT18125C	Natural Nylon 6/6	1.25 [32]		6.1			CT18125M
CT18125C0	Black Nylon 6/6 UV						CT18125M0
CT18200C	Natural Nylon 6/6	2.00 [51]		8.1			CT18200M
CT18200C0	Black Nylon 6/6 UV						CT18200M0

30 Lb. Minimum Tensile Strength

Standard Package Catalog Number	Material	Maximum Bundle Diameter Inches[mm]	Minimum Tensile Strength Lbs.	Length Inches	Width Inches [mm]	Installation Tool	Bulk Package Catalog Number
CT30125C	Natural Nylon 6/6	1.25 [32]	30	5.8	0.14 [3.6]	TWT1, MK7, CTT50	CT30125M
CT30125C0	Black Nylon 6/6 UV						CT30125M0

40 Lb. Minimum Tensile Strength

Standard Package Catalog Number	Material	Maximum Bundle Diameter Inches[mm]	Minimum Tensile Strength Lbs.	Length Inches	Width Inches [mm]	Installation Tool	Bulk Package Catalog Number
CT40200C	Natural Nylon 6/6	1.90 [48]	40	7.6	0.15 [4]	TWT1, MK7, CTT50	CT40200M
CT40200C0	Black Nylon 6/6 UV						CT40200M0
CT40300C	Natural Nylon 6/6	3.00 [76]		11.1			CT40300M
CT40300C0	Black Nylon 6/6 UV						CT40300M0
CT40400C	Natural Nylon 6/6	4.00 [102]		14.6			CT40400M
CT40400C0	Black Nylon 6/6 UV						CT40400M0

50 Lb. Minimum Tensile Strength

Standard Package Catalog Number	Material	Maximum Bundle Diameter Inches[mm]	Minimum Tensile Strength Lbs.	Length Inches [mm]	Width Inches [mm]	Installation Tool	Bulk Package Catalog Number
CT50175C	Natural Nylon 6/6	1.75 [44]	50	8.00 [222]	0.18 [5]	TWT1, MK7, CTT50	CT50175M
CT50175C0	Black Nylon 6/6 UV						CT50175M0
CT50300C	Natural Nylon 6/6	3.00 [76]		11.75 [298]			CT50300M
CT50300C0	Black Nylon 6/6 UV						CT50300M0
CT50400C	Natural Nylon 6/6	4.00 [102]		15.50 [394]			CT50400M
CT50400C0	Black Nylon 6/6 UV						CT50400M0

Blue highlighted items are industry standard and most frequently ordered.

UNIRAP™

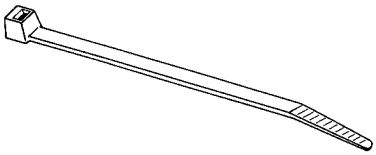

STANDARD CABLE TIES
(Continued)

120 Lb. Minimum Tensile Strength

UL 62275
Type 2 & 21

Standard Package Catalog Number	Material	Maximum Bundle Diameter Inches[mm]	Minimum Tensile Strength Lbs.	Length Inches [mm]	Width Inches [mm]	Installation Tool	Bulk Package Catalog Number
CT120200L	Natural Nylon 6/6	2.00 [51]	120	9.0 [229]	0.30 [8]	TWT2, MK9, CTT50	CT120200D
CT120200L0	BlackNylon 6/6 UV						CT120200D0
CT120300L	Natural Nylon 6/6	3.00 [76]		12.0 [305]			CT120300D
CT120300L0	black Nylon 6/6						CT120300D0
CT120400L	Natural Nylon 6/6	4.00 [102]		15.0 [381]			CT120400D
CT120400L0	black Nylon 6/6 UV						CT120400D0
CT120800L	Natural Nylon 6/6	8.00 [203]		29.2 [742]			-
CT120800L0	Black Nylon 6/6 UV						-

175 Lb. Minimum Tensile Strength

UL 62275
Type 2 & 21

Standard Package Catalog Number	Material	Maximum Bundle Diameter Inches[mm]	Minimum Tensile Strength Lbs.	Length Inches [mm]	Width Inches [mm]	Installation Tool	Bulk Package Catalog Number
CT1751100Q	Natural Nylon 6/6	11.00 [279]	175	36 [914]	0.35 [9]	Heavy	—
CT1751100Q0	Black Nylon 6/6 UV					TWT2, MK9, CTT50	
CT175500Q	Natural Nylon 6/6	5.50 [140]		18.25 [464]			
CT175500Q0	Black Nylon 6/6 UV						
CT175600Q	Natural Nylon 6/6	7.00 [178]		24.00 [610]			
CT175600Q0*	Black Nylon 6/6 UV						
CT175900Q	Natural Nylon 6/6	8.75 [222]		30.00 [762]			
CT175900Q0*	Black Nylon 6/6 UV						

* Not UL Listed, but UR 1565

250 Lb. Minimum Tensile Strength

UR 1565
Type 2 & 21

Standard Package Catalog Number	Material	Maximum Bundle Diameter Inches[mm]	Minimum Tensile Strength Lbs.	Length Inches [mm]	Width Inches [mm]	Installation Tool	Bulk Package Catalog Number
CT2501000Q	Natural Nylon 6/6	10.00 [254]	250	35.00 [889]	0.50 [13]	Heavy	—
CT2501000Q0	Black Nylon 6/6 UV					TWT2, MK9	
CT2501200Q	Natural Nylon 6/6	12.00 [305]		40.00 [1016]		TWT2, MK9	
CT2501200Q0	Black Nylon 6/6 UV						
CT250600Q	Natural Nylon 6/6	6.00 [152]		22.00 [559]			
CT250600Q0	Black Nylon 6/6 UV						
CT250800Q	Natural Nylon 6/6	8.00 [203]		29.00 [737]			
CT250800Q0	Black Nylon 6/6 UV						

Blue highlighted items are industry standard and most frequently ordered.

TYPE UG

UNIRAP™ Cable Ties

General purpose nylon 6/6 features light weight, high strength and a wide temperature range. It is halogen free so it does not release dangerous gases, such as chlorine, bromine, fluorine and iodine when burned. Nylon 6/6 is hygroscopic, and therefore, absorbs or releases moisture depending on its environment. Thus, the moisture level of the material will affect tensile strength, stiffness and elongation of the product.

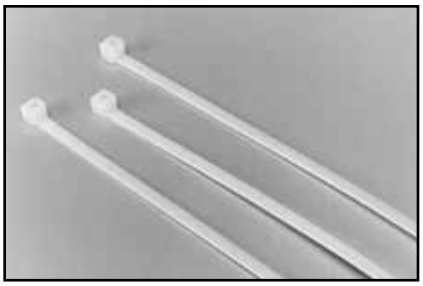

Features & Benefits

- Nylon 6/6 Standard
- Available in Black and Natural
- One piece injection molded
- Maximum strength and adjustability for versatility
- Chemically resistant to solvents, oils, grease, and diluted acids

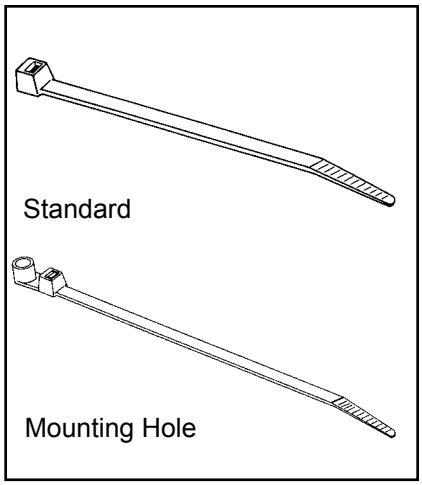

- Rounded edges and bent tip for easy installation
- Self-Locking

Standard Cable Ties

Std. Pkg. Catalog Number	Material	Max. Bundle Diameter (Inches)	Min. Tensile Strength (lbs)	Length (Inches)	Width (Inches)	Installation Tool	Tool Setting	Bulk Catalog Number
CT18075CUG	Natural Nylon 6/6	.75	18	4.00	.10	TWT1, MK7, CTT50	Mini	**CT18075MUG**
CT18075C0UG	Black Nylon 6/6 UV	.75	18	4.00	.10			**CT18075M0UG**
-	Natural Nylon 6/6	2.00	18	8.00	.10			**CT18200MUG**
CT18200C0UG	Black Nylon 6/6 UV	2.00	18	8.00	.10			**-**
CT30125CUG	Natural Nylon 6/6	1.25	30	6.00	.14		Intermediate	**CT30125MUG**
CT30125C0UG	Black Nylon 6/6 UV	1.25	30	6.00	.14			**-**
CT40200CUG	Natural Nylon 6/6	2.00	40	8.50	.15		Standard	**CT40200MUG**
CT40400C0UG	Black Nylon 6/6 UV	4.00	40	14.50	.15			**-**
CT50175CUG	Natural Nylon 6/6	1.75	50	8.00	.18			**CT50175MUG**
CT50175C0UG	Black Nylon 6/6 UV	1.75	50	8.00	.18			**CT50175M0UG**
CT50300CUG	Natural Nylon 6/6	3.00	50	11.30	.18			**CT50300MUG**
CT50300C0UG	Black Nylon 6/6 UV	3.00	50	11.30	.18			**CT50300M0UG**
CT50400CUG	Natural Nylon 6/6	4.00	50	15.50	.18			**-**
CT50400C0UG	Black Nylon 6/6 UV	4.00	50	15.50	.18			**-**
CT120200L0UG	Black Nylon 6/6 UV	2.00	120	8.87	.30			**-**
CT120400LUG	Natural Nylon 6/6	4.00	120	15.25	.30			**-**
CT120400L0UG	Black Nylon 6/6 UV	4.00	120	15.25	.30			**CT120400C0UG**
CT120500CUG	Natural Nylon 6/6	5.00	120	20.00	.30	TWT2, MK9, CTT50		**CT120500D0UG**
CT120900LUG	Natural Nylon 6/6	9.00	120	29.75	.30			**-**
CT175400Q0UG	Black Nylon 6/6 UV	4.00	175	15.00	.35		Heavy	**-**
CT175600QUG	Natural Nylon 6/6	6.00	175	21.00	.35			**-**
CT175600Q0UG	Black Nylon 6/6 UV	6.00	175	21.00	.35			**-**
CT175900Q0UG	Black Nylon 6/6 UV	9.00	175	32.00	.35			**-**
CT1751100QUG	Natural Nylon 6/6	11.00	175	36.00	.35			**-**
CT1751100Q0UG	Black Nylon 6/6 UV	11.00	175	36.00	.35			**-**
CT1751400QUG	Natural Nylon 6/6	14.00	175	52.00	.35			**-**
CT250800Q0UG	Black Nylon 6/6 UV	8.00	250	52.00	.50			**-**

Blue highlighted items are industry standard and most frequently ordered.

UNIRAP™

Type UG Cable Ties
(Continued)

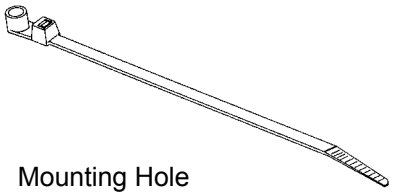

Mounting Hole

Mounting Hole Cable Ties

Std. Pkg. Catalog Number	Material	Screw Size	Max. Bundle Diameter Inches	Min. Tensile Strength (lbs)	Length Inches	Width Inches	Installation Tool	Tool Setting
CT50175MH10CUG	Natural Nylon 6/6	#10	1.75	50	8.50	.18	MK7, CTT50	Standard
CT50175MH10C0UG	Black Nylon 6/6 UV	#10	1.75	50	8.50	.18		
CT50300MH10GUG	Natural Nylon 6/6	#10	3.00	50	11.75	.18	TWT1, MK7, CTT50	
CT50300MH10C0UG	Black Nylon 6/6 UV	#10	3.00	50	11.75	.18		

Mounting Bases

Std. Pkg. Catalog Number	Mounting Method	Maximum Tie Slot Width	Dimension A	Dimension B	Dimension C	Bulk Catalog Number
CTB075RA4CUG	Rubber Adhesive	0.14”	.75”	.75”	.75”	-
CTB125RA4CUG	Rubber Adhesive	0.20"	1.125"	1.125"	0.19"	**CTB125RA4DUG**

UNIRAP™

RELEASABLE CABLE TIES

Perfect for prototype construction, releasable cable ties are ideal for temporary installations. Releasable ties are also good for applications where service requires adding or subtracting wires from an existing wire bundle.

Standard Releasable Ties

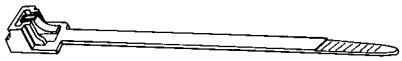

Extended Pawl Releasable Ties

UL 62275 Type 21

Standard Releasable Cable Ties

Std. Pkg. Catalog Number	Material	Max. Bundle Diameter Inches (mm)	Min. Tensile Strength (lbs)	Length Inches	Width Inches (mm)
CT50175RC	Natural Nylon 6/6	1.90 [48]	50	7.60	0.15 [4]
CT50175RC0	Black Nylon 6/6 UV				
CT50137RC	Natural Nylon 6/6	1.90 [48]	50	7.60	0.18 [5]
CT50137RC0	Black Nylon 6/6 UV				
CT50400RC	Natural Nylon 6/6	4.00 [102]		14.60	
CT50400RC0	Black Nylon 6/6 UV				

Extended Pawl Releasable Cable Ties

Std. Pkg. Catalog Number	Material	Max. Bundle Diameter Inches [mm]	Min. Tensile Strength (lbs)	Length Inches [mm]	Width Inches [mm]
CT50137EPRC	Natural Nylon 6/6	1.38 [35]	50	5.50 [140]	0.29 [7]
CT50137EPRC0	Black Nylon 6/6 UV				
CT50250EPRC	Natural Nylon 6/6	2.50 [64]		9.80 [249]	
CT50250EPRC0	Black Nylon 6/6 UV				

UR 1565

Heavy Duty Releasable Cable Ties

Std. Pkg. Catalog Number	Material	Max. Bundle Diameter Inches [mm]	Min. Tensile Strength (lbs)	Length Inches [mm]	Width Inches [mm]
CT250200RQ	Natural Nylon 6/6	2.25 [57]	250	9.00 [229]	0.50 [13]
CT250200RQ0	Black Nylon 6/6 UV				
CT250500RQ	Natural Nylon 6/6	6.00 [152]		22.00 [559]	
CT250500RQ0	Black Nylon 6/6 UV				
CT250600RQ	Natural Nylon 6/6	6.00 [152]		22.00 [559]	
CT250600RQ0	Black Nylon 6/6 UV				
CT250800RQ	Natural Nylon 6/6	8.00 [203]		29.00 [737]	
CT250800RQ0	Black Nylon 6/6 UV				
CT2501000RQ	Natural Nylon 6/6	10.00 [254]		34.00 [864]	
CT2501000RQ0	Black Nylon 6/6 UV				
CT2501200RQ0	Black Nylon 6/6 UV	12.00 [305]		40.00 [1016]	

Blue highlighted items are industry standard and most frequently ordered.

UNIRAP™

IDENTIFICATION CABLE TIES

Identification cable ties are used in both bundling and identifying wire groups at the same time.

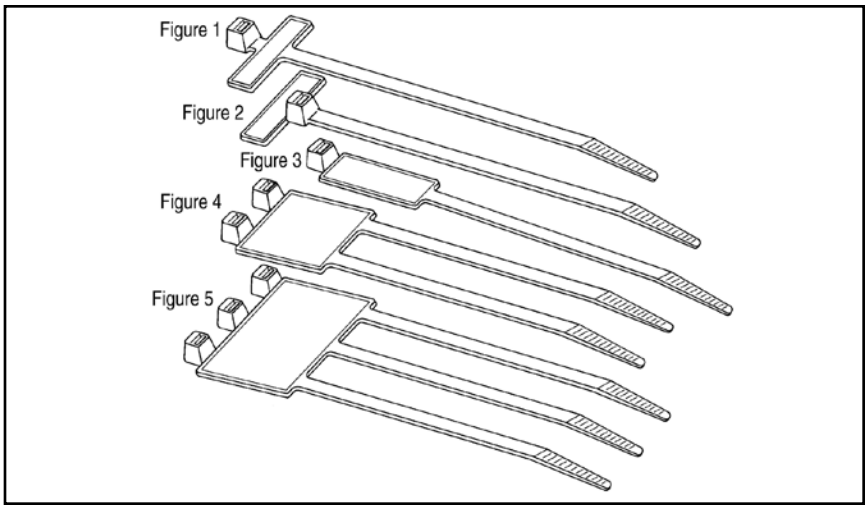

Std. Pkg. Catalog Number	Material	Figure No.	Marking Pad Size Inches	Max. Bundle Diameter Inches [mm]	Min. Tensile Strength (lbs)	Length Inches [mm]	Width Inches [mm]	Installation Tool & (Setting)
CT18075IDC	Natural Nylon 6/6	1	1 X 19/64	0.75 [19]	18	4.00 [102]	0.10 [3]	MK7 (MIN)
CT18075FLC		2	13/16 X 5/16	0.75 [19]	18	4.25 [108]	0.10 [3]	MK7 (MIN)
CT50175IDC		3	1 X 7/16	1.75 [44]	50	8.00 [203]	0.18 [5]	MK7 (STD)
CT50175ID2L		4	1-11/16 X 5/16	1.75 [44]	50	8.00 [203]	0.18 [5]	MK7 (STD)
CT50175ID3L		5	1-13/16 X 15/16	1.75 [44]	50	8.00 [203]	0.18 [5]	MK7 (STD)

MISCELLANEOUS ACCESSORIES

TYPE 145PTAG

94V0 Rated Plastic Tag for Telecom, Transportation & OEM Markets

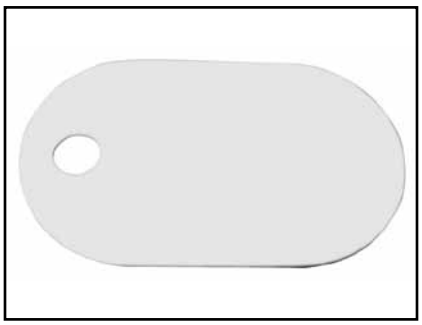

The new 145PTAG has been designed specifically for the Telecom market. The tag is manufactured from Flame Retardant Nylon with a 94V0 rating. The tag is durable, non-flammable and can be secured to cabling using a multi-ply cord. Within the telecom market these tags typically have P-Touch labels applied or are manually stenciled on both sides. The usual application is to mark the tags in the field with far end termination information, panel identification, voice and data identification and wire & cable marking. For the OEM user, in addition to the P-Touch label or stenciling, tags can be marked with information using most inks or permanent markers, tags can be secured with a waxed cord, UNIRAP™ cable tie or some other equivalent.

Specifications

Dimensions: 1" X 1-3/4" by 0.06" thick

Material: White Nylon UL 94V0

Packaging: 25 tags per polybag

Tag Marking: Tags are shipped with no markings; markings applied in the field based on application.

Catalog Number	Description
145PTAG	94V0 Rated Plastic

Blue highlighted items are industry standard and most frequently ordered.

UNIRAP™

MOUNTING HOLE CABLE TIES

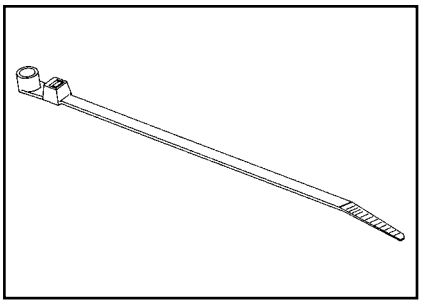

Std. Pkg. Catalog Number	Material	Screw Size	Max. Bundle Diameter Inches [mm]	Min. Tensile Strength (lbs)	Length Inches [mm]	Width Inches [mm]	Tool	Tool Setting	Bulk Catalog Number
CT18075MH4C	Natural Nylon 6/6	#4	0.75 [19]	18	4.25 [108]	0.10 [3]	MK7	Mini	**CT18075MH4M**
CT18075MH4C0	Black Nylon 6/6 UV	#4	0.75 [19]	18	4.25 [108]	0.10 [3]	MK7		—
CT30125MH8C	Nylon 6/6	#8	1.25 [32]	30	6.10 [155]	0.14 [4]	MK7	Intermediate	**CT30125MH8M**
CT30125MH8C0	Nylon 6/6 UV Standard	#8	1.25 [32]	30	6.25 [159]	0.14 [4]	MK7		—
CT50175MH10C	Nylon 6/6	#10	1.90 [48]	50	8.60 [218]	0.18 [5]	MK7	Standard	**CT50175MH10M**
CT50175MH10C0	Nylon 6/6 Standard	#10	1.90 [48]	50	8.60 [218]	0.18 [5]	MK7		**CT50175MH10M0**
CT50400MH10C	Nylon 6/6	#10	4.00 [102]	50	15.25 [387]	0.18 [5]	MK7		—
CT50400MH10C0	Nylon 6/6 Standard	#10	4.00 [102]	50	15.25 [387]	0.18 [5]	MK7		**CT50400MH10M0**
CT120400MH14L	Nylon 6/6	#14	4.00 [102]	120	15.90 [401]	0.30 [8]	MK9		**CT120400MH14D**
CT120400MH14L0	Nylon 6/6	#14	4.00 [102]	120	15.90 [401]	0.30 [8]	MK9		**CT120400MH14D0**

Blue highlighted items are industry standard and most frequently ordered.

Type CT-SSB

UNIRAP™

The Stainless Steel Barb cable ties (Type CT-SSB) are Nylon 6/6 with self locking stainless steel barbs and have an oval low profile head. There are no sharp edges helping prevent damaged cables. CT-SSB ties have a curved tip for faster initial threading to help speed installation and a no slip tail for easy grip during tensioning. CT-SSB ties are currently available in Natural and UV Black. Cable ties are cULus Listed for Wiring Positioning Devices.

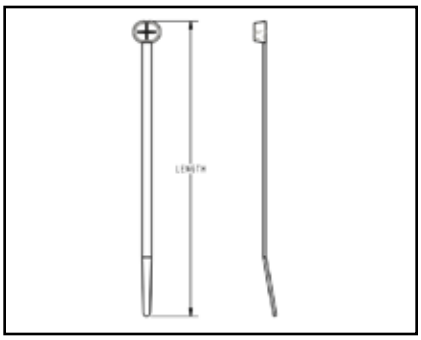

c UL US
LISTED
Type 21

Features & Benefits

- Nylon 6/6 Standard
- Self-locking stainless steel barb
- Available in Black and Natural
- Maximum strength and adjustability for versatility
- Chemically resistant to solvents, oils, grease, and diluted acids
- Rounded edges and bent tail for easy installation
- Safe for air handling spaces
- Plenum rated

Catalog Number	Material	Color	Max Bundle Diameter	Tensile Strength (lbs)	Length	Width	Installation Tool	Bulk Catalog Number
CT18100SSBC	Nylon 6/6	Natural	0.91”	18	4.02”	.09”	MK7 TWT1 CTT50 MK9	CT18100SSBM
CT18100SSBC0		Black						CT18100SSBM0
CT18200SSBC		Natural	2.01”		7.91”			CT18200SSBM
CT18200SSBC0		Black						CT18200SSBM0
CT40137SSBC		Natural	1.38”	40	5.91”	.14”	MK7 TWT1 CTT50 MK9	CT40137SSBM
CT40137SSBC0		Black						CT40137SSBM0
CT40200SSBC		Natural	1.97”		7.87”	.15”		CT40200SSBD
CT40200SSBC0		Black						CT40200SSBD0
CT40300SSBC		Natural	3.15”		11.18”	.14”		CT40300SSBD
CT40300SSBC0		Black						CT40300SSBD0
CT40400SSBC		Natural	4.09”		14.49”			CT40400SSBD
CT40400SSBC0		Black						CT40400SSBD0
CT50175SSBC		Natural	1.77”	50	7.32”	.19”	MK7 TWT1 CTT50 MK9	CT50175SSBD
CT50175SSBC0		Black						CT50175SSBD0
CT50200SSBC		Natural	1.97”		7.87”	.24”		CT50200SSBB
CT50200SSBC0		Black						CT50200SSBB0
CT50250SSBC		Natural	2.56”		9.84”	.19”		CT50250SSBB
CT50250SSBC0		Black						CT50250SSBB0
CT50300SSBC		Natural	3.19”		11.61”	.19”		CT50300SSBB
CT50300SSBC0		Black						CT50300SSBB0

Blue highlighted items are industry standard and most frequently ordered.

Type CT-SSB

UNIRAP™

(Continued)

c UL us LISTED
Type 21

Catalog Number	Material	Color	Max Bundle Diameter	Tensile Strength (lbs)	Length	Width	Installation Tool	Bulk Catalog Number
CT50425SSBC	Nylon 6/6	Natural	4.21”	50	14.96”	.19”	MK7, TWT1, CTT50, MK9	CT50425SSBB
CT50425SSBC0		Black						CT50425SSBB0
CT110200SSBC		Natural	2.01”	110	8.70”	.28”	MK9	CT110200SSBB
CT110200SSBC0		Black						CT110200SSBB0
CT110300SSBL		Natural	2.99”		11.81”	.32”		CT110300SSBC
CT110300SSBL0		Black						CT110300SSBC0
CT110325SSBC		Natural	3.15”			.28”		CT110325SSBB
CT110325SSBC0		Black						CT110325SSBB0
CT110350SSBL		Natural	3.62”		13.78”	.32”		CT110350SSBC
CT110350SSBL0		Black						CT110350SSBC0
CT110400SSBL		Natural	4.02”		14.88”	.28”		CT110400SSBC
CT110400SSBL0		Black						CT110400SSBC0
CT110500SSBL		Natural	5.00”		18.11”	.28”		CT110500SSBC
CT110500SSBL0		Black						CT110500SSBC0
CT110600SSBL		Natural	5.98”		21.18”	.28”		CT110600SSBC
CT110600SSBL0		Black						CT110600SSBC0
CT110800SSBL		Natural	7.99”		27.52”	.28”		CT110800SSBC
CT110800SSBL0		Black						CT110800SSBC0
CT120300SSBL		Natural	3.15”	120	11.81”	.39”	MK9 TWT2	CT120300SSBC
CT120300SSBL0		Black						CT120300SSBC0
CT120350SSBL		Natural	3.82”		13.78”	.39”		CT120350SSBC
CT120350SSBL0		Black						CT120350SSBC0
CT120400SSBL		Natural	4.33”		15.75”	.39”		CT120400SSBC
CT120400SSBL0		Black						CT120400SSBC0
CT120500SSBL		Natural	4.92”		17.72”	.39”		CT120500SSBC
CT120500SSBL0		Black						CT120500SSBC0

Blue highlighted items are industry standard and most frequently ordered.

UNIRAP™

HALAR® TIES

Halar® ties meet NEC regulations and can be used in applications where low smoke and low flame are a concern, as in air handling spaces. The raw material used to manufacture BURNDY® Halar® cable ties is UL 94V-0 rated. These ties come in a distinct color of red for easy identification.

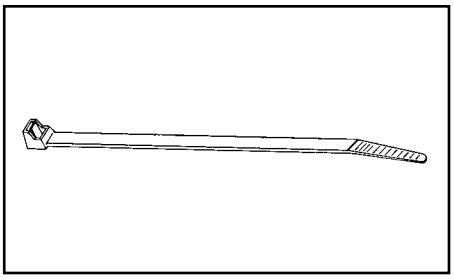

Features & Benefits

- Smooth, rounded edges help ensure safe, efficient handling
- Ergonomically designed installation tool consistently tensions and cuts off ties leaving flush edges
- Flame retardant and non-toxic for applications where safety from fire is critical

Halar® Cable Ties

Std. Pkg. Catalog Number	Material	Max. Bundle Diameter Inches[mm]	Min. Tensile Strength (lbs)	Length Inches[mm]	Width Inches[mm]	Installation Tool	Tool Setting	Bulk Catalog Number
CTH30200C	Halar	2.00 [51]	30	8.00 [203]	0.14 [4]	MK7	Intermediate	—
CTH50175C		1.75 [44]	50	8.00 [203]	0.18 [5]	MK7	Standard	**CTH50175M**

UNIRAP™

TEFZEL® TIES

Tefzel® ties provide excellent protection against radiation, ultraviolet light, and a wide range of chemicals. It is also rated for low outgassing applications. BURNDY® Tefzel® ties offer temperature stability to 150° C and come in a standard color of blue for easy identification.

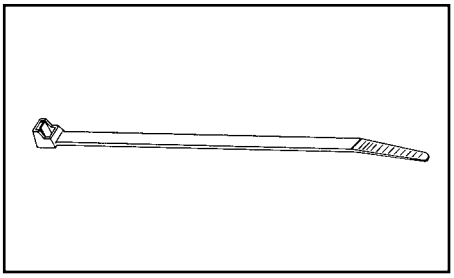

Tefzel® Cable Ties

Std. Pkg. Catalog Number	Material	Max. Bundle Diameter Inches [mm]	Min. Tensile Strength (lbs)	Length Inches	Width Inches	Installation Tool	Tool Setting	Bulk Catalog Number
CTZ18075C	Tefzel	0.75 [19]	18	4.00	0.10	MK7	Mini	—
CTZ30200C		2.00 [51]	30	8.00	0.14	MK7	Intermediate	—
CTZ50175C		1.75 [44]	50	8.00	0.18	MK7	Standard	—
CTZ120400L		4.00 [102]	120	14.50	.030	MK9	Standard	**CTZ120400D**

Blue highlighted items are industry standard and most frequently ordered.

Type CTHS

UNIRAP™

Heat Stabilized Cable Ties

Catalog Number	Material	Max Bundle Diameter Inches	Tensile Strength Lbs.	Length Inches	Width Inches
CTHS18075M	Nylon 6/6 Heat Stabilized	.75	18	4.1	.10
CTHS140125M		1.25	40	5.8	.14
CTHS50700M		1.90	50	7.6	.18
CTHS50300M		3.00	50	11.1	.18
CTHS50400M		4.00	50	14.6	.18
CTHS120400M		4.00	120	15.0	.30

TYPE TFV-B

HOOK AND LOOP STRAPS

Reusable and flexible BURNDY® Hook and Loop Straps are a unique self-gripping fastening system.

These ties are specifically used on fiberoptic applications.

The TFV-V2 flame retardant straps are UL Listed Wire Positioning Devices (ZODZ), UL94-V2 rated for use in air handling spaces in accordance with the NEC section 300-22 (c) and (d). Perfect for plenum areas.

25 straps are conveniently packaged in each polybag.

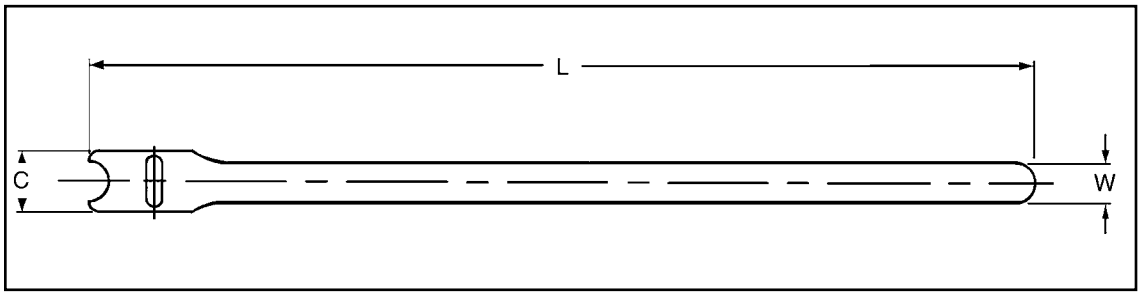

Catalog Number	Product Description	C	L	W	T	Max. Bundle Diameter	Avg. Sheer (PSI)	Avg. Peel (PIW)	Pkg. Qty.
TFV3B12V2	VELCRO® hook and loop strap, 3/4" x 12", Black, 25pk	0.75"	12.00"	0.50"	0.09"	3.0"	29	0.6	*1
TFV3B18V2	VELCRO® hook and loop strap, 3/4" x 18", Black, 25pk	0.75"	18.00"	0.50"	0.09"	5.0"	29	0.6	*1
TFV3B6V2	VELCRO® hook and loop strap, 3/4" x 6", Black, 25pk	0.75"	6.00"	0.50"	0.09"	1.0"	29	0.6	*1
TFV3BLU12	VELCRO® hook and loop strap, 3/4" x 12", Royal Blue, 25pk	0.75"	12.00"	0.50"	0.09"	3.0"	23	0.5	*1
TFV3BLU18	VELCRO® hook and loop strap, 3/4" x 18", Royal Blue, 25pk	0.75"	18.00"	0.50"	0.09"	5.0"	23	0.5	*1

* Straps sold by the package, quantity 1 package equals 25 straps.
** UL94-V2 listed.
VELCRO® is a registered trademark of Velcro USA, Inc.

MOUNTING BASES

BURNDY® offers a wide variety of mounting bases suited for many applications. Mounting bases are used in conjunction with cable ties to stabilize and secure wire bundles, both indoors and outdoors. Mounting bases can be secured to a surface using rubber based adhesive, acrylic adhesive, or also can be screw mounted.

BURNDY's 4-way mounting bases are available in four sizes to accommodate CT18 through CT50 series cable ties. Insertion of ties can be made from all sides. Each mount may be secured with two screws, with adhesive backing, or both, for ease of application and stability. For applications where higher temperatures, certain chemicals, or UV radiation are a concern and an adhesive is the preferred method for securing, the acrylic adhesive 4-way mounting bases are recommended. The 2-way mounting bases may be secured with one screw, with adhesive backing, or both, and allow ties to be inserted from two sides.

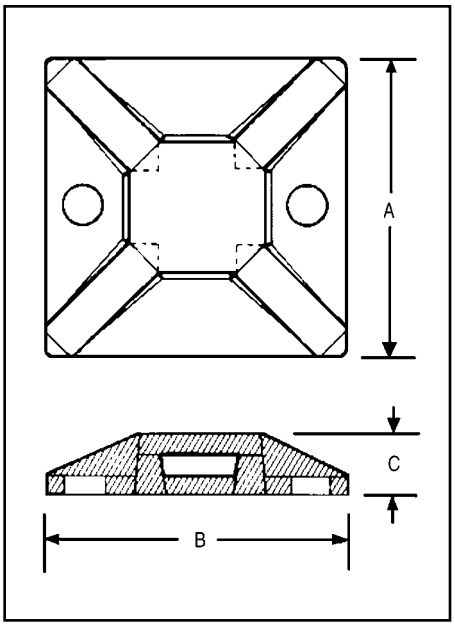

4-Way

Catalog Number	Mounting Method	Maximum Tie Slot Width	Dimension A	Dimension B	Dimension C
CTB075S4C	Screw	0.14"	0.75"	0.75"	0.15"
CTB075AA4C	Acrylic Adhesive	0.14"	0.75"	0.75"	0.15"
CTB075RA4C	Rubber Adhesive	0.14"	0.75"	0.75"	0.15"
CTB075RA4M	Rubber Adhesive	0.14"	0.75"	0.75"	0.15"
CTB125S4C	Screw	0.20"	1.12"	1.12"	0.19"
CTB125AA4C	Acrylic Adhesive	0.20"	1.12"	1.12"	0.19"
CTB125RA4C	Rubber Adhesive	0.20"	1.12"	1.12"	0.19"
CTB125RA4L	Rubber Adhesive	0.20"	1.12"	1.12"	0.19"
CTB125RA4D	Rubber Adhesive	0.20"	1.12"	1.12"	0.19"
CTB150S4B	Screw	0.35"	1.50"	1.50"	0.25"
CTB150AA4C	Acrylic Adhesive	0.35"	1.50"	1.50"	0.25"
CTB150RA4C	Rubber Adhesive	0.35"	1.50"	1.50"	0.25"
CTB150RA4B	Rubber Adhesive	0.35"	1.50"	1.50"	0.25"

All bases listed above are natural. UV Black mounting bases are also available in nearly every size. Insert "0" after the part number.

2-Way

Catalog Number	Mounting Method	Maximum Tie Slot Width	Dimension A	Dimension B	Dimension C
CTB125S2C	Screw	0.18"	1.125"	1.125"	0.21"
CTB125RA2C	Rubber Adhesive	0.18"	1.125"	1.125"	0.21"

All bases listed above are natural. UV Black mounting bases are also available in nearly every size. Insert "0" after the part number.

Blue highlighted items are industry standard and most frequently ordered.

CABLE HANGERS

Cable Hangers provide a contact area range of 1/2" to 3/8" in width. All contact edges have a full radius for product protection, and sizes are clearly marked on each clamp.

Cable Hangers are injection molded. Available in white nylon 6/6 and black nylon 6/6.

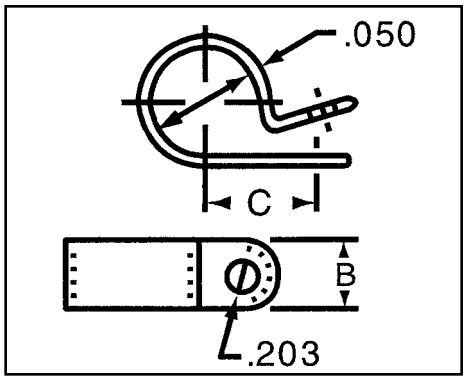

Catalog Number	Mounting Screw	Maximum Bundle Inches	Dimension B Inches (Width)	Dimension C Inches (Mount Hole Centers)
CH2C	#10 Screw	0.12	0.37	0.32
CH2M	#10 Screw	0.12	0.37	0.32
CH3C	#10 Screw	0.18	0.37	0.43
CH3M	#10 Screw	0.18	0.37	0.43
CH4C	#10 Screw	0.25	0.37	0.41
CH4M	#10 Screw	0.25	0.37	0.41
CH5C	#10 Screw	0.31	0.37	0.49
CH5M	#10 Screw	0.31	0.37	0.49
CH6C	#10 Screw	0.37	0.37	0.59
CH6M	#10 Screw	0.37	0.37	0.59
CH7C	#10 Screw	0.43	0.37	0.57
CH7M	#10 Screw	0.43	0.37	0.57
CH8C	#10 Screw	0.50	0.37	0.60
CH8M	#10 Screw	0.50	0.37	0.60
CH9C	#10 Screw	0.56	0.37	0.60
CH9M	#10 Screw	0.56	0.37	0.60
CH10C	#10 Screw	0.62	0.37	0.60
CH10M	#10 Screw	0.62	0.37	0.60
CH11C	#10 Screw	0.62	0.50	0.65
CH11M	#10 Screw	0.62	0.50	0.65
CH12C	#10 Screw	0.75	0.50	0.78
CH12M	#10 Screw	0.75	0.50	0.78
CH14C	#10 Screw	0.87	0.50	0.84
CH14M	#10 Screw	0.88	0.50	0.84
CH16C	#10 Screw	1.00	0.50	0.91
CH16M	#10 Screw	1.00	0.50	0.91
CH18C	#10 Screw	1.12	0.50	0.97
CH18M	#10 Screw	1.12	0.50	0.97
CH24L	#10 Screw	1.50	0.50	1.19
CH24C	#10 Screw	1.50	0.50	1.19

All hangers listed above are natural. UV Black cable hangers are also available in nearly every size. Insert "0" after the part number.

Blue highlighted items are industry standard and most frequently ordered.

Type CTSS

UNIRAP™

Stainless Steel 304 Cable Ties

BURNDY® Stainless Steel ties are designed to secure hoses, cables, poles, pipes and more when harsh environmental conditions may adversely affect the bundling application. Used where corrosion, vibration, weathering, radiation, and temperature extremes are a concern. BURNDY® Stainless Steel ties can be used in virtually any indoor, outdoor and underground application.

BURNDY® Stainless Steel ties are made from Grade 304 Stainless Steel. This tie is designed with a low profile clamping bearing head with fully adjustable strap accommodating many bundle diameters.

Features & Benefits

- Meet the requirements of ABS
- 304 grade stainless steel
- Suitable for general purpose applications
- Smooth, rounded edges help ensure safe efficient handling
- Available in a wide range of lengths and widths
- Self locking steel ball design speeds installation and locks into place at any length
- Provides a strong durable method of cable bundling
- Flame retardant and non-toxic for applications where safety from fire is critical

Catalog Number	Material	Max Bundle Diameter Inches [mm]	Tensile Strength Lbs. (N)	Length Inches [mm]	Width Inches [mm]	Installation Tool
CTSS225100304C	304 Stainless Steel	0.99 [25]	225 (1000)	3.94 [100]	0.18 [4.6]	CTTSS900 MK9SST
CTSS225200304C		1.97 [50]	225 (1000)	7.87 [200]	0.18 [4.6]	
CTSS225300304C		3.00 [76]	225 (1000)	11.81 [300]	0.18 [4.6]	
CTSS225400304C		4.02 [102]	225 (1000)	15.75 [400]	0.18 [4.6]	
CTSS225500304C		5.04 [128]	225 (1000)	19.68 [500]	0.18 [4.6]	
CTSS225600304C		6.07 [154]	225 (1000)	23.62 [600]	0.18 [4.6]	
CTSS500200304L		1.97 [50]	500 (2200)	7.87 [200]	0.31 [7.9]	
CTSS500300304L		3.00 [76]	500 (2200)	11.81 [300]	0.31 [7.9]	
CTSS500400304L		4.02 [102]	500 (2200)	15.75 [400]	0.31 [7.9]	
CTSS500500304L		5.04 [128]	500 (2200)	19.68 [500]	0.31 [7.9]	
CTSS500600304L		6.07 [154]	500 (2200)	23.62 [600]	0.31 [7.9]	
CTSS500700304L		7.09 [180]	500 (2200)	27.56 [700]	0.31 [7.9]	
CTSS500750304L		7.60 [193]	500 (2200)	31.50 [800]	0.31 [7.9]	
CTSS500800304L		8.12 [206]	500 (2200)	39.37 [1000]	0.31 [7.9]	
CTSS700200304L		1.97 [50]	700 (3113)	7.87 [200]	0.50 [12.7]	
CTSS700300304L		3.00 [76]	700 (3113)	11.81 [300]	0.50 [12.7]	
CTSS700400304L		4.02 [102]	700 (3113)	15.75 [400]	0.50 [12.7]	
CTSS700500304L		5.04 [128]	700 (3113)	19.68 [500]	0.50 [12.7]	
CTSS700600304L		6.07 [154]	700 (3113)	23.62 [600]	0.50 [12.7]	
CTSS700700304L		7.09 [180]	700 (3113)	27.56 [700]	0.50 [12.7]	
CTSS700800304L		8.12 [206]	700 (3113)	39.37 [1000]	0.50 [12.7]	
CTSS900200304L		1.97 [50]	920 (4100)	7.87 [200]	0.62 [15.9]	CTTSS900
CTSS900300304L		3.00 [76]	920 (4100)	11.81 [300]	0.62 [15.9]	
CTSS900400304L		4.02 [102]	920 (4100)	15.75 [400]	0.62 [15.9]	
CTSS900500304L		5.04 [128]	920 (4100)	19.68 [500]	0.62 [15.9]	
CTSS900600304L		6.07 [154]	920 (4100)	23.62 [600]	0.62 [15.9]	
CTSS900700304L		7.09 [180]	920 (4100)	27.56 [700]	0.62 [15.9]	
CTSS900800304L		8.12 [206]	920 (4100)	39.37 [1000]	0.62 [15.9]	

Blue highlighted items are industry standard and most frequently ordered.

Type CTSS

UNIRAP™

Stainless Steel 316 Cable Ties

BURNDY® Stainless Steel ties are designed to secure hoses, cables, poles, pipes, and more when harsh environmental conditions may adversely affect the bundling application. Used where corrosion, vibration, weathering, radiation and temperature extremes are a concern, BURNDY® Stainless Steel ties can be used in virtually any indoor, outdoor and underground application.

BURNDY® Stainless Steel ties are made from Grade 316 Stainless Steel. This tie is designed with a low profile clamping bearing head with fully adjustable strap accommodating many bundle diameters.

Features & Benefits

- Meet the requirements of ABS
- 316 grade stainless steel
- Suitable for rigorous corrosive conditions
- Smooth, rounded edges help ensure safe efficient handling
- Available in a wide range of lengths and widths
- Self locking steel ball design speeds installation and locks into place at any length
- Provides a strong durable method of cable bundling
- Flame retardant and non-toxic for applications where safety from fire is critical

Catalog Number	Material	Max Bundle Diameter Inches [mm]	Tensile Strength Lbs. (N)	Length Inches [mm]	Width Inches [mm]	Installation Tooling
CTSS225100316C	316 Stainless Steel	0.99 [25]	225 (1000)	3.94 [100]	0.18 [4.6]	CTTSS900 MK9SST
CTSS225200316C		1.97 [50]	225 (1000)	7.87 [200]	0.18 [4.6]	
CTSS225300316C		3.00 [76]	225 (1000)	11.81 [300]	0.18 [4.6]	
CTSS225400316C		4.02 [102]	225 (1000)	15.75 [400]	0.18 [4.6]	
CTSS225500316C		5.04 [128]	225 (1000)	19.68 [500]	0.18 [4.6]	
CTSS225600316C		6.07 [154]	225 (1000)	23.62 [600]	0.18 [4.6]	
CTSS500200316C		1.97 [50]	500 (2200)	7.87 [200]	0.31 [7.9]	
CTSS500300316C		3.00 [76]	500 (2200)	11.81 [300]	0.31 [7.9]	
CTSS500400316L		4.02 [102]	500 (2200)	15.75 [400]	0.31 [7.9]	
CTSS500500316L		5.04 [128]	500 (2200)	19.68 [500]	0.31 [7.9]	
CTSS500600316L		6.07 [154]	500 (2200)	23.62 [600]	0.31 [7.9]	
CTSS500700316L		7.09 [180]	500 (2200)	27.56 [700]	0.31 [7.9]	
CTSS500750316L		7.60 [193]	500 (2200)	31.50 [800]	0.31 [7.9]	
CTSS500800316L		8.12 [206]	500 (2200)	39.37 [1000]	0.31 [7.9]	
CTSS700200316L		1.97 [50]	700 (3113)	7.87 [200]	0.50 [12.7]	
CTSS700300316L		3.00 [76]	700 (3113)	11.81 [300]	0.50 [12.7]	
CTSS700400316L		4.02 [102]	700 (3113)	15.75 [400]	0.50 [12.7]	
CTSS700500316L		5.04 [128]	700 (3113)	19.68 [500]	0.50 [12.7]	
CTSS700600316L		6.07 [154]	700 (3113)	23.62 [600]	0.50 [12.7]	
CTSS700700316L		7.09 [180]	700 (3113)	27.56 [700]	0.50 [12.7]	
CTSS700800316L		8.12 [206]	700 (3113)	39.37 [1000]	0.50 [12.7]	
CTSS900200316L		1.97 [50]	920 (4100)	7.87 [200]	0.62 [15.9]	CTTSS900
CTSS900300316L		3.00 [76]	920 (4100)	11.81 [300]	0.62 [15.9]	
CTSS900400316L		4.02 [102]	920 (4100)	15.75 [400]	0.62 [15.9]	
CTSS900500316L		5.04 [128]	920 (4100)	19.68 [500]	0.62 [15.9]	
CTSS900600316L		6.07 [154]	920 (4100)	23.62 [600]	0.62 [15.9]	
CTSS900700316L		7.09 [180]	920 (4100)	27.56 [700]	0.62 [15.9]	
CTSS900800316L		8.12 [206]	920 (4100)	39.37 [1000]	0.62 [15.9]	

Blue highlighted items are industry standard and most frequently ordered.

Type CTSS-FC

UNIRAP™

Fully Coated 304 Cable Ties

The Stainless Steel fully coated cable ties (Type CTSS-FC) are designed with a steel ball type locking mechanism. There are no sharp edges which prevents damaged cables. These ties have smooth, rounded edges and polyester coating which add to the safety of the installer. High tensile strength along with the shield of the polyester coating offer a reliable and lasting bundling solution. CTSS-FC ties are currently available in black. BURNDY® stainless steel fully coated cable ties can be used in any indoor, outdoor or underground application.

Features & Benefits

- Meet the requirements of ABS
- 304 grade stainless steel
- Available in black only
- Suitable for general purpose applications
- Smooth, rounded edges along with the polyester coating add to the safety of the installer
- Self locking steel ball design speeds installation and locks into place at any length
- Available in a wide range of lengths and widths
- Comes with a benefit of halogen free low smoke polyester coating
- Provides a strong durable method of cable bundling

Catalog Number	Material	Max Bundle Diameter Inches [mm]	Tensile Strength Lbs. (N)	Length Inches [mm]	Width Inches [mm]	Installation Tool
CTSS100100FC304C	304 Stainless Steel	0.98 [25]	160 (712)	3.94 [100]	0.18 [4.6]	CTTSS900 MK9SST
CTSS100200FC304C		1.97 [50]	160 (712)	7.87 [200]	0.18 [4.6]	
CTSS100300FC304C		3.00 [76]	160 (712)	11.81 [300]	0.18 [4.6]	
CTSS100400FC304C		4.02 [102]	160 (712)	15.75 [400]	0.18 [4.6]	
CTSS100500FC304C		5.04 [128]	160 (712)	19.68 [500]	0.18 [4.6]	
CTSS100600FC304C		6.07 [154]	160 (712)	23.60 [600]	0.18 [4.6]	
CTSS100800FC304C		8.11 [206]	160 (712)	31.50 [800]	0.18 [4.6]	
CTSS250200FC304L		1.97 [50]	250 (1112)	7.87 [200]	0.31 [7.9]	
CTSS250300FC304L		3.00 [76]	250 (1112)	11.81 [300]	0.31 [7.9]	
CTSS250400FC304L		4.02 [102]	250 (1112)	15.75 [400]	0.31 [7.9]	
CTSS250500FC304L		5.04 [128]	250 (1112)	19.68 [500]	0.31 [7.9]	
CTSS250600FC304L		6.06 [154]	250 (1112)	23.62 [600]	0.31 [7.9]	
CTSS250700FC304L		7.09 [180]	250 (1112)	27.56 [700]	0.31 [7.9]	
CTSS250800FC304L		8.11 [206]	250 (1112)	39.37 [1000]	0.31 [7.9]	
CTSS450200FC304L		1.97 [50]	450 (2002)	7.87 [200]	0.50 [12.7]	
CTSS450300FC304L		3.00 [76]	450 (2002)	11.81 [300]	0.50 [12.7]	
CTSS450400FC304L		4.02 [102]	450 (2002)	15.75 [400]	0.50 [12.7]	
CTSS450500FC304L		5.04 [128]	450 (2002)	19.68 [500]	0.50 [12.7]	
CTSS450600FC304L		6.06 [154]	450 (2002)	23.62 [600]	0.50 [12.7]	
CTSS450700FC304L		7.09 [180]	450 (2002)	27.56 [700]	0.50 [12.7]	
CTSS450800FC304L		8.11 [206]	450 (2002)	39.37 [1000]	0.50 [12.7]	
CTSS675200FC304Q		1.97 [50]	675 (3003)	7.87 [200]	0.62 [15.9]	CTTSS900
CTSS675300FC304Q		3.00 [76]	675 (3003)	11.81 [300]	0.62 [15.9]	
CTSS675400FC304Q		4.02 [102]	675 (3003)	15.75 [400]	0.62 [15.9]	
CTSS675500FC304Q		5.04 [128]	675 (3003)	19.68 [500]	0.62 [15.9]	
CTSS675600FC304Q		6.06 [154]	675 (3003)	23.62 [600]	0.62 [15.9]	
CTSS675700FC304Q		7.09 [180]	675 (3003)	27.56 [700]	0.62 [15.9]	
CTSS675800FC304Q		8.11 [206]	675 (3003)	39.37 [1000]	0.62 [15.9]	

Blue highlighted items are industry standard and most frequently ordered.

Type CTSS-FC

UNIRAP™

Fully Coated 316 Cable Ties

The BURNDY® Stainless Steel fully coated cable ties (Type CTSS-FC) are designed with a steel ball self locking mechanism. There are no sharp edges which prevents damaged cables. These ties have smooth, rounded edges and polyester coating which add to the safety of the installer. High tensile strength along with the shield of the polyester coating offer a reliable and lasting bundling solution. CTSS-FC ties are currently available in black. BURNDY® stainless steel fully coated cable ties can be used in any indoor, outdoor or underground application.

Features & Benefits

- Meet the requirements of ABS
- 316 grade stainless steel
- Available in black only
- Suitable for rigorous corrosive conditions
- Smooth, rounded edges along with the polyester coating add to the safety of the installer
- Self locking steel ball design, speeds installation and locks into place at any length
- Provides a strong durable method of cable bundling
- Available in a wide range of lengths and widths
- Comes with a benefit of halogen free low smoke polyester coating

Catalog Number	Material	Max Bundle Diameter Inches [mm]	Tensile Strength Lbs. (N)	Length Inches [mm]	Width Inches [mm]	Installation Tool
CTSS100100FC316C	316 Stainless Steel	0.98 [25]	160 (712)	3.94 [100]	0.18 [4.6]	CTTSS900 MK9SST
CTSS100200FC316C		1.97 [50]	160 (712)	7.87 [200]	0.18 [4.6]	
CTSS100300FC316C		3.00 [76]	160 (712)	11.81 [300]	0.18 [4.6]	
CTSS100400FC316C		4.02 [102]	160 (712)	15.75 [400]	0.18 [4.6]	
CTSS100500FC316C		5.04 [128]	160 (712)	19.68 [500]	0.18 [4.6]	
CTSS100600FC316C		6.07 [154]	160 (712)	23.60 [600]	0.18 [4.6]	
CTSS100800FC316C		8.11 [206]	160 (712)	31.50 [800]	0.18 [4.6]	
CTSS250200FC316L		1.97 [50]	250 (1112)	7.87 [200]	0.31 [7.9]	
CTSS250300FC316L		3.00 [76]	250 (1112)	11.81 [300]	0.31 [7.9]	
CTSS250400FC316L		4.02 [102]	250 (1112)	15.75 [400]	0.31 [7.9]	
CTSS250500FC316L		5.04 [128]	250 (1112)	19.68 [500]	0.31 [7.9]	
CTSS250600FC316L		6.06 [154]	250 (1112)	23.62 [600]	0.31 [7.9]	
CTSS250700FC316L		7.09 [180]	250 (1112)	27.56 [700]	0.31 [7.9]	
CTSS250800FC316L		8.11 [206]	250 (1112)	39.37 [1000]	0.31 [7.9]	
CTSS450200FC316L		1.97 [50]	450 (2002)	7.87 [200]	0.50 [12.7]	
CTSS450300FC316L		3.00 [76]	450 (2002)	11.81 [300]	0.50 [12.7]	
CTSS450400FC316L		4.02 [102]	450 (2002)	15.75 [400]	0.50 [12.7]	
CTSS450500FC316L		5.04 [128]	450 (2002)	19.68 [500]	0.50 [12.7]	
CTSS450600FC316L		6.06 [154]	450 (2002)	23.62 [600]	0.50 [12.7]	
CTSS450700FC316L		7.09 [180]	450 (2002)	27.56 [700]	0.50 [12.7]	
CTSS450800FC316L		8.11 [206]	450 (2002)	39.37 [1000]	0.50 [12.7]	
CTSS675200FC316Q		1.97 [50]	675 (3003)	7.87 [200]	0.62 [15.9]	CTTSS900
CTSS675300FC316Q		3.00 [76]	675 (3003)	11.81 [300]	0.62 [15.9]	
CTSS675400FC316Q		4.02 [102]	675 (3003)	15.75 [400]	0.62 [15.9]	
CTSS675500FC316Q		5.04 [128]	675 (3003)	19.68 [500]	0.62 [15.9]	
CTSS675600FC316Q		6.06 [154]	675 (3003)	23.62 [600]	0.62 [15.9]	
CTSS675700FC316Q		7.09 [180]	675 (3003)	27.56 [700]	0.62 [15.9]	
CTSS675800FC316Q		8.11 [206]	675 (3003)	39.37 [1000]	0.62 [15.9]	

Blue highlighted items are industry standard and most frequently ordered.

Type CTSS-PC

UNIRAP™

Partially Coated 304 Cable Ties

BURNDY® Stainless Steel partially coated cable ties (Type CTSS-PC) are designed with a steel ball self locking mechanism. There are no sharp edges which prevents damaged cables. These ties have smooth, rounded edges and polyester coating which add to the safety of the installer. High tensile strength along with the shield of the polyester coating offer a reliable and lasting bundling solution. CTSS-PC ties are currently available in black. BURNDY® stainless steel partially coated cable ties can be used in any indoor, outdoor or underground application.

Features & Benefits

- Meet the requirements of ABS
- 304 grade stainless steel
- Available in black only
- Suitable for general purpose applications
- Smooth, rounded edges along with the polyester coating add to the safety of the installer
- Self locking steel ball design speeds installation and locks into place at any length
- Provides a strong durable method of cable bundling
- Available in a wide range of lengths and widths
- Comes with a benefit of halogen free low smoke polyester coating

Catalog Number	Material	Max Bundle Diameter Inches [mm]	Tensile Strength Lbs. (N)	Length Inches [mm]	Width Inches [mm]	Installation Tool
CTSS250200PC304L	304 Stainless Steel	1.97 [50]	270 (1201)	7.87 [200]	0.31 [7.9]	CTTSS900 MK9SST
CTSS250300PC304L		3.00 [76]	270 (1201)	11.81 [300]	0.31 [7.9]	
CTSS250400PC304L		4.02 [102]	270 (1201)	15.75 [400]	0.31 [7.9]	
CTSS250500PC304L		5.04 [128]	270 (1201)	19.68 [500]	0.31 [7.9]	
CTSS250600PC304L		6.06 [154]	270 (1201)	23.62 [600]	0.31 [7.9]	
CTSS250700PC304L		7.09 [180]	270 (1201)	27.56 [700]	0.31 [7.9]	
CTSS250800PC304L		8.11 [206]	270 (1201)	39.37 [1000]	0.31 [7.9]	
CTSS450200PC304L		1.97 [50]	450 (2002)	7.87 [200]	0.50 [12.7]	
CTSS450300PC304L		3.00 [76]	450 (2002)	11.81 [300]	0.50 [12.7]	
CTSS450400PC304L		4.02 [102]	450 (2002)	15.75 [400]	0.50 [12.7]	
CTSS450500PC304L		5.04 [128]	450 (2002)	19.68 [500]	0.50 [12.7]	
CTSS450600PC304L		6.06 [154]	450 (2002)	23.62 [600]	0.50 [12.7]	
CTSS450700PC304L		7.09 [180]	450 (2002)	27.56 [700]	0.50 [12.7]	
CTSS450800PC304L		8.11 [206]	450 (2002)	39.37 [1000]	0.50 [12.7]	
CTSS675200PC304Q		1.97 [50]	675 (3003)	7.87 [200]	0.62 [15.9]	CTTSS900
CTSS675300PC304Q		3.00 [76]	675 (3003)	11.81 [300]	0.62 [15.9]	
CTSS675400PC304Q		4.02 [102]	675 (3003)	15.75 [400]	0.62 [15.9]	
CTSS675500PC304Q		5.04 [128]	675 (3003)	19.68 [500]	0.62 [15.9]	
CTSS675600PC304Q		6.06 [154]	675 (3003)	23.62 [600]	0.62 [15.9]	
CTSS675700PC304Q		7.09 [180]	675 (3003)	27.56 [700]	0.62 [15.9]	
CTSS675800PC304Q		8.11 [206]	675 (3003)	39.37 [1000]	0.62 [15.9]	

Blue highlighted items are industry standard and most frequently ordered.

Type CTSS-PC

UNIRAP™

Partially Coated 316 Cable Ties

BURNDY® Stainless Steel partially coated cable ties (Type CTSS-PC) are designed with a steel ball self locking mechanism. There are no sharp edges which prevents damaged cables. These ties have smooth, rounded edges and polyester coating which add to the safety of the installer. High tensile strength along with the shield of the polyester coating offer a reliable and lasting bundling solution.CTSS-PC ties are currently available in black.BURNDY® stainless steel partially coated cable ties can be used in any indoor, outdoor or underground application.

Features & Benefits

- Meet the requirements of ABS
- 316 grade stainless steel
- Available in black only
- Suitable for rigorous corrosive conditions
- Smooth, rounded edges along with the polyester coating add to the safety of the installer
- Self locking steel ball design speeds installation and locks into place at any length
- Provides a strong durable method of cable bundling
- Available in a wide range of length and width
- Comes with a benefit of halogen free low smoke polyester coating

Catalog Number	Material	Max Bundle Diameter Inches [mm]	Tensile Strength Lbs. (N)	Length Inches [mm]	Width Inches [mm]	Installation Tool
CTSS250200PC316L	316 Stainless Steel	1.97 [50]	270 (1201)	7.87 [200]	0.31 [7.9]	CTTSS900 MK9SST
CTSS250300PC316L		3.00 [76]	270 (1201)	11.81 [300]	0.31 [7.9]	
CTSS250400PC316L		4.02 [102]	270 (1201)	15.75 [400]	0.31 [7.9]	
CTSS250500PC316L		5.04 [128]	270 (1201)	19.68 [500]	0.31 [7.9]	
CTSS250600PC316L		6.06 [154]	270 (1201)	23.62 [600]	0.31 [7.9]	
CTSS250700PC316L		7.09 [180]	270 (1201)	27.56 [700]	0.31 [7.9]	
CTSS250800PC316L		8.11 [206]	270 (1201)	39.37 [1000]	0.31 [7.9]	
CTSS450200PC316L		1.97 [50]	450 (2002)	7.87 [200]	0.50 [12.7]	
CTSS450300PC316L		3.00 [76]	450 (2002)	11.81 [300]	0.50 [12.7]	
CTSS450400PC316L		4.02 [102]	450 (2002)	15.75 [400]	0.50 [12.7]	
CTSS450500PC316L		5.04 [128]	450 (2002)	19.68 [500]	0.50 [12.7]	
CTSS450600PC316L		6.06 [154]	450 (2002)	23.62 [600]	0.50 [12.7]	
CTSS450700PC316L		7.09 [180]	450 (2002)	27.56 [700]	0.50 [12.7]	
CTSS450800PC316L		8.11 [206]	450 (2002)	39.37 [1000]	0.50 [12.7]	
CTSS675200PC316Q		1.97 [50]	675 (3003)	7.87 [200]	0.62 [15.9]	CTTSS900
CTSS675300PC316Q		3.00 [76]	675 (3003)	11.81 [300]	0.62 [15.9]	
CTSS675400PC316Q		4.02 [102]	675 (3003)	15.75 [400]	0.62 [15.9]	
CTSS675500PC316Q		5.04 [128]	675 (3003)	19.68 [500]	0.62 [15.9]	
CTSS675600PC316Q		6.06 [154]	675 (3003)	23.62 [600]	0.62 [15.9]	
CTSS675700PC316Q		7.09 [180]	675 (3003)	27.56 [700]	0.62 [15.9]	
CTSS675800PC316Q		8.11 [206]	675 (3003)	39.37 [1000]	0.62 [15.9]	

Blue highlighted items are industry standard and most frequently ordered.

UNIRAP™

CABLE TIE VARIETY PACK

UL Listed

Catalog Number: **CTASST**

Contents			
Quantity	**Length**	**Color**	**Strength**
100	4″	Natural	18# Strength
100	4″	Black	18# Strength
100	8″	Black	50# Strength
200	8″	Natural	50# Strength
50	11″	Natural	50# Strength
50	11″	Black	50# Strength

CABLE TIE TOOLS

Ergonomics and the prevention of repetitive motion injuries, coupled with the need to continually improve assembly efficiencies and procedures, are a major concern with most cable tie users. BURNDY® cable tie tools effectively address both issues. BURNDY® has world class cable tie tools to complement its line of high quality cable ties. BURNDY® cable tie tools are truly state-of-the- art in both design and performance.

BURNDY® tools make it easier for operators to install cable ties, while maintaining correct tension and flush cut-off. Worker safety is further enhanced as the tools can eliminate the sharp edges of a cut-off cable tie.

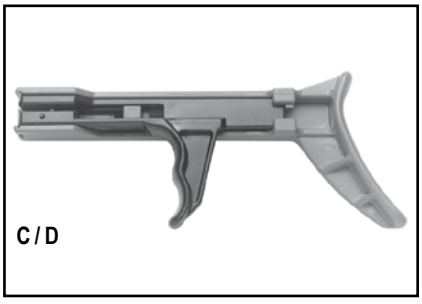

Catalog Number	Ref. Figure	Description	For Use On
MK7	A	Adjustable Tensioning Tool for Width 0.10” to 0.19”	Nylon 18-50 lbs
MK9	B	Adjustable Tensioning Tool for Width 0.19” to 0.35”	Nylon 18-250 lbs
TWT1	C	Non-adjustable Tensioning Tool for Width 0.10” to 0.19” Twist & Cut	Nylon 18-50 lbs
TWT2	D	Non-adjustable Tensioning Tool for Width 0.19” to 0.35” Twist & Cut	Nylon 120-175 lbs
CTT50	E	Adjustable Tensioning Tool for Width 0.10” to 0.19”	Nylon up to 50 lbs
CTSS900	F	Stainless Steel Tie Tool	SS Ties up to 900 lbs
MK9SST	G	Stainless Steel Tie Tool	SS Ties up to .5 width

Blue highlighted items are industry standard and most frequently ordered.

TABLE OF CONTENTS

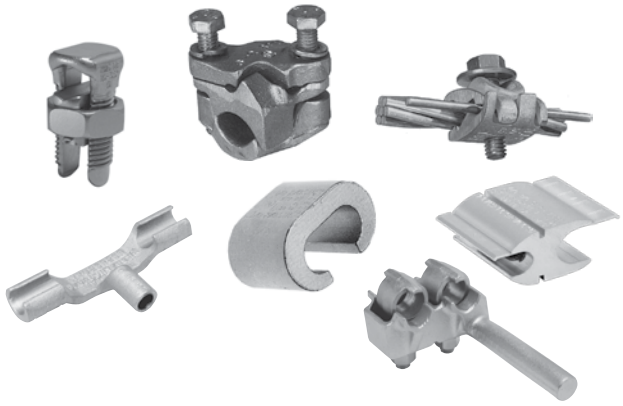

TAP CONNECTORS

Mechanical (Bolted)	H-3 - H-19
Compression	H-20 - H-39
Transformer and Equipment	H-40 - H-42

COMPRESSION SPLICES

Service Entrance	H-45 - H-48
Neutral	H-48
Jumper	H-49 - H-53
Repair Sleeve	H-53 - H-54
Full Tension	H-55 - H-66

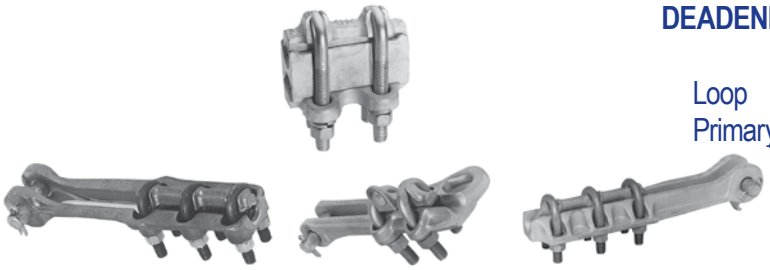

DEADEND FITTING AND ACCESSORIES

Loop	H-68 - H-69
Primary and Strain Bus	H-70 - H-71

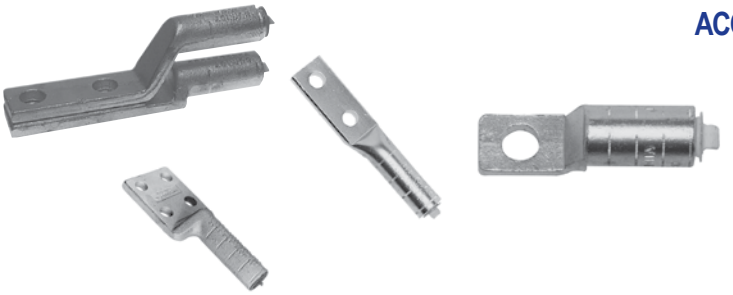

COMPRESSION TERMINALS AND ACCESSORIES H-73 - H-78

Blue highlighted items are industry standard and most frequently ordered.

TAP CONNECTORS
TABLE OF CONTENTS

MECHANICAL (BOLTED)

Mechanical Tap Connectors H-3
Types **KS & KS-3** H-4
Type **SC** H-5
Type **KSU** H-5
Type **KVS** H-6
Type **KVSW** H-6
Type **KVSU** H-7
Type **KVS-A** H-8
Type **VG** H-9
Types **UC-L, UC-K** H-10
Type **CP-A** H-11
Type **VP** H-12
Type **UW-R** H-12
Type **UC** H-13
Type **CP** H-13
Type **QPX** H-14
Type **VT** H-15
Types **UCG-R & UCG-RS** H-16
Types **UC-R & UC-RS** H-16
Type **UCT** H-17
Types **UC KIT, UCCOVER1 & UCTCOVER** H-18
Type **LSC** H-19

COMPRESSION

Compression Tap Connectors H-20
Type **YC-C** H-21
Type **YP-C** H-21
Type **YC-A** H-22
Type **YP-U** H-23
Type **YPC-U** H-24
Type **YC-U** H-25
Types **YPC-A-U & YPC-R-U** H-25
Type **CC** H-26
Seven Connector Selector Chart H-27
Types **YHO & YHD** H-28
Types **YHN & YHR** H-29
LOKTAP™ H-30
Type **YCT** H-31
Type **YOT** H-31
Type **YTU-R-R** H-32
Type **YTA-R-2N** H-33
Types **YKA-R-2N** H-34
Type **YSA-R-2N** H-35
Type **YTA-2N** H-35
Type **YKA-2N** H-36
Type **YCB-R** H-37
Types **YCB-U & YCB-R-U** H-38
Types **J990 & J1252** H-38
Types **YHO-J, YHD-J, YHN-J** H-39

TRANSFORMER AND EQUIPMENT

Type **E-C-G** H-40
Types **KC2 & EQC632C** H-41
Type **YA-2LH** H-41
Type **YE-LH** H-42
Type **YE-R, YE-W** H-42

Blue highlighted items are industry standard and most frequently ordered.

MECHANICAL (BOLTED) TAP CONNECTORS

The BURNDY line of mechanical tap connectors is the most complete, dependable and economical available. These mechanical connectors consist of service, parallel, and midspan types.

Generally the alloys and hardware used depend on whether the connector is for a strain or current carrying application, and is made of aluminum or copper. Particular alloys and hardware are selected for strength, conductivity, durability, ductility and resistance to corrosion.

In a copper connector, high strength alloys are used in mechanical clamping components and high conductivity alloy in current carrying elements.

Aluminum clamp type connectors are made of alloy 356, which is impervious to stress corrosion. In its heat-treated state, it has high strength and is used for both current carrying and clamping elements.

Hardware is high strength and corrosion-resistant. In copper connectors, DURIUM™, a silicon bronze alloy, is used. Anodized aluminum alloy 2024-T4 bolts and 6061-T6 nuts are used in aluminum connectors. They provide the best combination of strength, resistance to galling and corrosion, and their thermal coefficient of expansion is most suitable for aluminum. To insure dependable connections, bolts should be tightened to the recommended torque values shown in the specific product table or in the table below.

These mechanical tap connectors are mainly used in overhead distribution systems to provide primary service taps and/or secondary service drop connections to the end users.

A few of the key features and benefits of these connectors are:

Features and Benefits

- High strength alloys
  - ◊ Provides efficient and reliable performance
- Range taking
  - ◊ Accommodates a large range of conductors in either groove reducing inventory to a minimum
- Matched groove designs
  - ◊ Ensures maximum contact with conductors accommodated
- Hex bolts, nuts and washers
  - ◊ Provides high contact pressure and rapid assembly

Recommended Tightening Torque		Standard Wrench Size	
Bolt Size	Recommended Torque (Inch Lbs.)	Bolt	Nut
DURIUM™ and Galvanized Hardware			
1/4 - 20	80	7/16	7/16
5/16 - 18	180	1/2	1/2
3/8 - 16	240	9/16	9/16
1/2 - 13	480	3/4	3/4
5/8 - 11	660	15/16	15/16
3/4 - 10	1050	1-1/8	1-1/8
Aluminum Hardware*			
1/2 - 13	300	3/4	3/4
5/8 - 11	480	15/16	15/16
3/4 - 10	620	1-1/8	1-1/8

* Aluminum bolts are lubricated.
If no tightening torque is listed in the following catalog pages, use values in table above.

Torque Range	Recommended BURNDY® Torque Wrench
30 - 150 in-lbs	BTW30150
150 - 750 in-lbs	BTW150750

Blue highlighted items are industry standard and most frequently ordered.

TYPES KS & KS-3

SERVIT®

ACCOMMODATES: COPPER, COPPERWELD

MATERIAL: COPPER

Compact, high strength, high copper alloy SERVIT® split-bolt has free-running threads and easy to grip wrench flats. Highly resistant to season cracking and corrosion, the SERVIT® provides maximum pressure and assures a secure connection on all combinations of run and tap conductors. Type KS-3 accommodates 3 maximum size conductors.

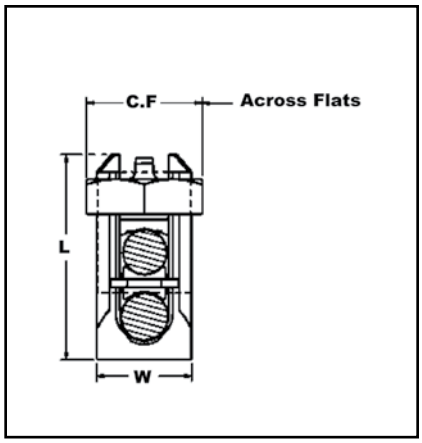

Catalog Number	L	W	Conductor						▲ Recommended Tightening Torque(in-lb)	Wrench Size (across flats)
			Copper		Copperweld Maximum Run and Tap					
			Range for Equal Run and Tap	Min. Tap with Max. Run	Sol.	Str.	Type A	Type D		
† KS90	0.85	0.38	12 Str. - 10 Str.	16 Str.	#10	—	—	—	80	1/2
† KS15	0.85	0.38	10 Str. - 8 Str.	14 Str.	#8	—	—	—		
† KS17	1.14	0.45	8 Str. - 6 Sol.	14 Str.	#6	3 #12	8A	9-1/2D	165	5/8
* KS17-3	0.98	0.70	8 Str. - 6 Sol.	16 Str.	#6	3 #12	8A	9-1/2D		
† KS20	1.20	0.51	8 Str. - 4 Sol.	14 Str.	#4	3 #10	6A	8D		11/16
* KS20-3	1.17	0.78	8 Str. - 4 Sol.	14 Str.	#4	3 #10	6A	8D		
† KS22	1.50	0.60	6 Str. - 2 Sol.	14 Str.	#2	3 #8	4A	6D	275	3/4
* KS22-3	1.33	0.84	6 Str. - 2 Sol.	14 Str.	#2	3 #8	4A	6D		
† KS23	1.54	0.62	6 Str. - 2 Str.	14 Str.	#1	3 #7	3A	5D		7/8
† KS25	1.77	0.73	4 Str. - 1/0 Str.	14 Str.	2/0	3 #5	2A	4D	385	1
† KS26	1.94	0.82	2 Str. - 2/0 Str.	14 Str.	3/0	7 #7	—	—		1-1/16
† KS27	1.86	1.17	1 Str. - 3/0 Str.	8 Sol.	—	—	—	—	500	1-3/8
† KS29	2.07	1.17	1 Str. - 250	8 Str.	4/0	7 #5	—	—	650	1-7/16
† KS31	2.51	1.41	1/0 Str. - 350	1/0 Str.	—	19 #8	—	—		2
† KS34	2.79	1.48	2/0 Str. - 500	2/0 Str.	—	19 #6	—	—	825	2-3/16
KS39	3.29	1.94	4/0 Str. - 750	4/0 Str.	—	19 #5	—	—	1000	2-3/8
KS44	3.73	2.19	300 - 1000	4/0 Str.	—	—	—	—	1100	2-9/16

▲ Listed torque values are for maximum conductor combinations accommodated. Consult UL486 Tables 7-4, 7-5, 7-6 for smaller conductor combinations.

See note page A-2

* Not UL Listed or CSA Certified.

† In addition to UL Listed for wire connectors and CSA Certified, these items are also UL rated for direct burial.

To ensure proper tightening torque use BURNDY® BTW Torque Wrenches.

Blue highlighted items are industry standard and most frequently ordered.

TYPE SC

SERVIT® COVER

HUG-A-BUG

Used indoors or outdoors this compact, one-piece plastic SERVIT® cover, saves time and material, eliminates costly taping of split-bolts. Positive latch snaps easily and quickly over connector, ideal for tight quarters. Self positioning plastic fingers wrap around wires fully insulating joint. UL Listed for 600 volt indoor application. Three covers accommodate a range of 6 SERVIT® sizes through 2/0 Str.

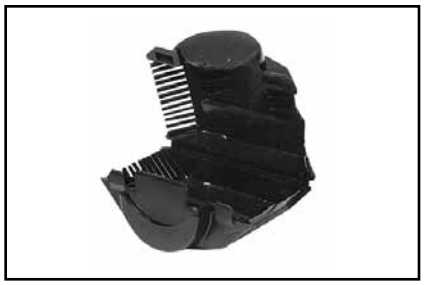

Catalog Number	Conductor Range				*For Use with	For Use with
	Range for Equal Run/Tap		Min. Tap/Max. Run			
	Min.	Max.	Min.	Max.		
SC4	8 Str.	6 Sol.	14 Str.	6 Sol.	KS17	—
SC4	8 Str.	4 Sol.	14 Str.	4 Sol.	KS20	—
SC2	6 Str.	2 Sol.	14 Str.	2 Sol.	KS22	KSA6
SC2	6 Str.	2 Str.	14 Str.	2 Str.	KS23	KSA4
SC2/0	4 Str.	1/0 Str.	14 Str.	1/0 Str.	KS25	KSA2
SC2/0	2 Str.	2/0 Str.	14 Str.	2/0 Str.	KS26	KSA1/0

* UL Listing of Type SC Cover applies to use on BURNDY® SERVIT® Type KS and to equivalent split-bolt connectors indicated strip length is maintained, maximum indicated conductor sizes are not exceeded, and connector is properly located within recess provided for it.

TYPE KSU

UNIVERSAL SERVIT®

ACCOMMODATES: COPPER, COPPERWELD,AAC,ACSR, AAAC AND STEEL

MATERIAL: COPPER (TIN PLATED)

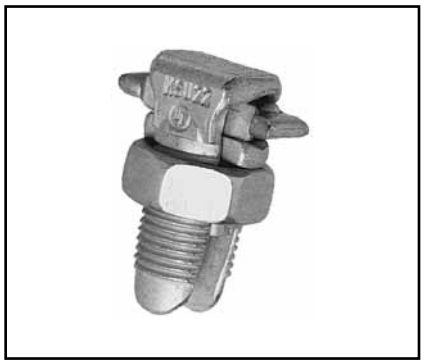

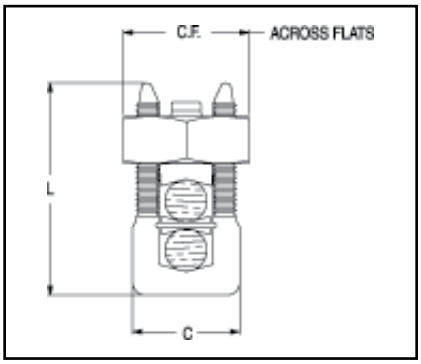

Tin-plated, high strength copper alloy SERVIT® with spacer. Spacer separates dissimilar conductors and provides long contact length that prevents high pressure point contacts between run and tap conductors. Use of PENETROX™ joint compound recommended with Aluminum and ACSR to limit oxide growth and increase life of connection. To ensure proper tightening torque use BURNDY® BTW Torque Wrenches.

486A
Copper Only

Catalog Number	L	C	Run		Tap		Max. Conductor			Recommended Tightening Torque in-lb	Wrench Size (across Flats)
			Copper & Aluminum	ACSR / AAAC / 5005	Copper & Aluminum	ACSR/ AAAC/ 5005	Steel				
							Sol. 3 Str. Nom. BWG	BWG	Dia.		
KSU17	0.92	0.42	12 Sol. - 6 Sol.	8 (6-1)	12 Sol. - 6 Sol.	8 (6-1)	8	—	5/32	165	5/8
KSU20	1.05	0.48	10 Sol. - 4 Sol.	6 (6-1)	10 Sol. - 4 Sol.	6 (6-1)	6	8	7/32		11/16
KSU22	1.25	0.57	10 Sol. - 2 Sol.	6 (6-1) - 4 (7-1)	10 Sol. - 2 Sol.	6 (6-1) - 4 (7-1)	4	6	1/4	275	3/4
KSU23	1.48	0.59	8 Str. - 2 Str.	3 (6-1) - 2 (6-1)	8 Sol. - 2 Str.	6 (6-1) - 2 (6-1)	—	4	5/16		13/16
KSU25	1.77	0.70	2 Str. - 1/0 Str.	3 (6-1) - 1 (6-1)	10 Str. - 1/0 Str.	6 (6-1) - 1 (6-1)	—		3/8	385	15/16
KSU26	1.93	0.79	2 Str. - 2/0 Str.	1 (6-1) - 1/0 (6-1)	8 Str. - 2/0 Str.	6 (6-1) - 1/0 (6-1)			7/16		1-1/16
KSU27	2.34	1.12	1 Str. - 3/0 Str.	1 (6-1) - 2/0 (6-1)	8 Sol. - 3/0 Str.	8 (6-1) - 2/0 (6-1)			1/2	500	1-3/8
KSU29	2.50	1.58	1Str. -250	2/0 (6-1) - 4/0 (6-1)	8 Str. - 250	6 (6-1) - 4/0 (6-1)				650	
KSU31	2.88	1.36	1/0 Str. - 350	3/0 (6-1) - 4/0 (6-1)	4 Str. - 350	4 (6-1) - 4/0 (6-1)			5/8		1-11/16
KSU34	3.12	1.47	400 - 500	336 (30-7) - 477 (18-1)	2 Str. - 500	2 (6-1) - 477 (18-1)	—			825	1-13/16

Blue highlighted items are industry standard and most frequently ordered.

TYPE KVS

OKLIP™

ACCOMMODATES:
COPPER, COPPERWELD

MATERIAL: COPPER

Compact, two-piece, high strength; high copper alloy BURNDY OKLIP™ recommended for heavy duty connections.Neoprene rings hold bolts in place during installation. Installed with ordinary wrench.

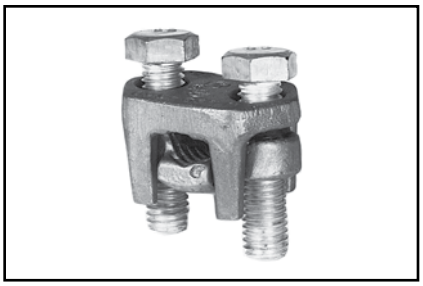

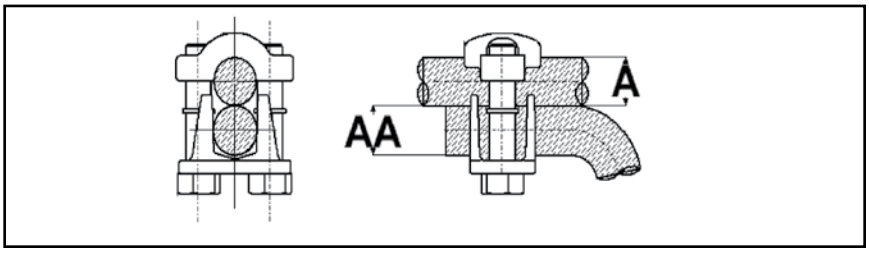

Catalog Number	Conductor					Recommended Tightening Torque (in-lb)	Wrench Size (Cross flats)
	Copper		Copperweld Max. Run & Tap				
	Run (A)	Tap (AA)	Sol.	Str.	Type V		
KVS26	1 Str. - 2/0 Str.	6 Str. - 2/0 Str.	3/0	7 #8	—	180	1/2
KVS28	1/0 Str. - 4/0 Str.	10 Str. - 4/0 Str.	4/0	7 #6	V3/0	250	9/16
KVS31	250 - 350 kcmil	10 Str. - 350 kcmil	—	19 #8	V250	325	3/4
KVS34	400 - 500 kcmil	10 Str. - 500 kcmil	—	19 #6	V350	375	3/4
KVS40	400 - 800 kcmil	3/0 Str. - 800 kcmil	—	19 #5	—	500	3/4
KVS44	500 - 1000 kcmil	3/0 Str. - 1000 kcmil	—	—	—	500	15/16

To ensure proper tightening torque use BURNDY® BTW Torque Wrenches.

TYPE KVSW

OKLIP™

ACCOMMODATES: COPPER, COPPERWELD

MATERIAL: COPPER

Similar to OKLIP™ Type KVS except for high copper alloy spacer that separates run and tap conductor. Provides high contact pressure, confines conductor strands, and assures vibration proof connection. Longer peened bolt, permits swivel action for easier installation.

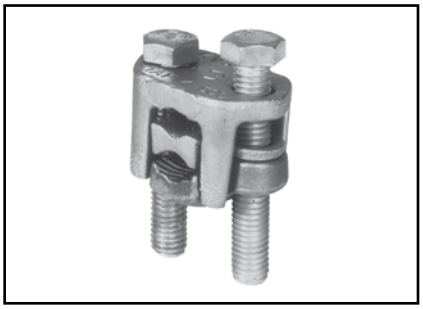

Catalog Number	Conductor		Wrench Size (Cross Flats)	Torque in - lb
	Run	Tap		
KVSW26	2 Str. - 2/0 Str.	6 Sol. - 2/0 Str.	1/2	180
KVSW28	1/0 Str. - 4/0 Str.	6 Sol. - 4/0 Str.	9/16	250
KVSW31	250 - 350 kcmil	4 Sol. - 350 kcmil	3/4	325
KVSW34	400 - 500 kcmil	4 Str. - 500 kcmil	3/4	375
KVSW40	400 - 800 kcmil	4/0 - 800 kcmil	3/4	500
KVSW44	500 - 1000 kcmil	250 - 1000 kcmil	15/16	500

To ensure proper tightening torque use BURNDY® BTW Torque Wrenches.

Blue highlighted items are industry standard and most frequently ordered.

TYPE KVSU

UNIVERSAL OKLIP™

ACCOMMODATES: COPPER, COPPERWELD, AAC†, ACSR†, AAAC

MATERIAL: TIN PLATED COPPER

Compact, high strength, tin-plated copper alloy two-piece connector with spacer and tin-plated silicon bronze DURIUM™ hardware. Recommended for heavy duty connections. Spacer separates dissimilar conductors and provides long contact length. Neoprene ring prevents loss of shorter bolt during installation. Longer peened bolt permits swivel action for easier installation.

Use of PENETROX™ joint compound recommended with aluminum and ACSR.

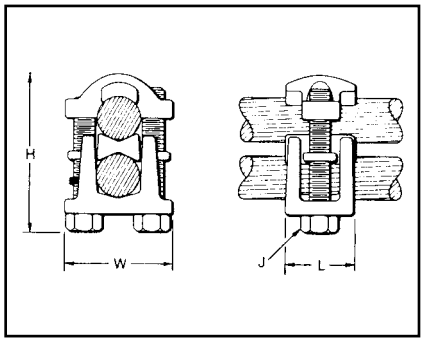

Catalog Number	Conductor								H	J	L	W	Rec. Tightening Torque (in-lb)	Wrench Size (Cross Flats)
	Run		Tap		Run		Tap							
	Copper & Alum.	ACSR, AAAC, & 5005	Copper & Alum.	ACSR, AAAC, & 5005	Copper Sol., Copperweld Sol.	Steel Nom. Dia.	Copper Sol., Copperweld Sol.	Steel Nom. Dia.						
KVSU26	2 Str. - 2/0 Str.	3 - 2/0	6 Str. - 2/0 Str.	6 - 2/0	1 - 3/0	5/16 - 7/16	#6 - 3/0	3/16 - 7/16	2	5/16	1	1-1/2	180	1/2
KVSU28	1/0 Str. - 4/0 Str.	1/0 - 4/0	6 Str. - 4/0 Str.	6 - 4/0	2/0 - 4/0	3/8 - 1/2	#6 - 4/0	5/32 - 1/2	2-3/8	3/8	1-1/8	1-3/4	250	9/16
KVSU31	250 - 350 kcmil	4/0 - 300	#5 - 350	6 - 300	—	9/16 - 5/8	#6 - 4/0	3/16 - 5/8	2-5/8	1/2	1-3/8	2-1/8	325	3/4
KVSU34	400 - 500 kcmil	336.4 - 397.5	#4 - 500	5 - 397.5	—	3/4 - 3/4	#4 - 4/0	7/32 - 3/4	3	1/2	1-1/2	2-1/4	375	3/4
KVSU40	400 - 800 kcmil	336.4 - 715.5	4/0 - 800	3/0 - 715.5	—	3/4 - 1	—	1/2 - 1	3-1/2	1/2	1-5/8	2-1/2	500	3/4
KVSU44	500 - 1000 kcmil	397.5 - 900	4/0 - 1000 kcmil	4/0 - 900	—	7/8 - 1-1/8	—	1/2 - 1-1/8	4	3/8	2	3	500	5/16

† Accommodates compressed conductors within diameter range.
To ensure proper tightening torque use BURNDY® BTW Torque Wrenches.

TYPE KVS-A

OKLIP™

ACCOMMODATES: COPPER, COPPERWELD, AAC†, ACSR†, AAAC

MATERIAL: ALUMINUM

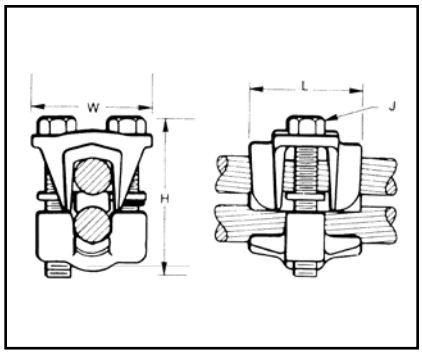

Three-piece, high-conductivity, non-copper bearing aluminum alloy connector with thick spacer and aluminum hardware. Hardware in KVS26A and KVS28A is stainless steel. Recommended for heavy duty dissimilar metal applications. Spacer separates conductors and provides long contact length. Belted entrances prevent chafing and permit easier assembly of conductors. Longer, peened bolt, permits swivel action for easier installation. Neoprene ring prevents loss of shorter bolt. PENETROX™ joint compound recommended with aluminum and ACSR.

Catalog Number	Conductor			
	Run		Tap	
	Copper & Aluminum†	ACSR†, AAAC, & 5005	Copper & Aluminum†	ACSR†, AAAC, & 5005
KVS26A	2 Str. - 2/0 Str.	#4 - 2/0	10 Str. - 2/0 Str.	#6 - 2/0
KVS28A	1/0 Str. - 4/0 Str.	1/0 - 4/0	10 Str. - 4/0 Str.	#6 - 4/0
KVS31A	250 - 350	4/0 - 336.4	6 Str. - 350 kcmil	#6 - 336.4 kcmil
KVS34A	400 - 500	336.4 - 397.5	4 Str. - 500 kcmil	#5 - 397.5 kcmil
KVS40A	400 - 800	336.4 - 715.5 kcmil	3/0 Str. - 800 kcmil	3/0 - 715.5
KVS44A	500 - 1000	397.5 - 900 kcmil	3/0 Str. - 1000 kcmil	3/0 - 900 kcmil

† Accommodates compressed conductors within diameter range.
To ensure proper tightening torque use BURNDY® BTW Torque Wrenches.

THESE CONNECTORS CAN ACCOMMODATE ACSR CONDUCTORS OVER ARMOR ROD WITHIN THE DIAMETER RANGE INDICATED.

Application Over Armor Rod

Catalog Number	Conductor Range by Diameter			H	J	L	W
	Min. Run Dia.	Min. Tap Dia.	Max Run & Tap Dia.				
KVS26A	0.28	0.11	0.44	2	5/16	1-3/8	1-5/8
KVS28A	0.36	0.11	0.56	2-3/8	3/8	1-5/8	2
KVS31A	0.56	0.18	0.68	3	1/2	2	2-5/8
KVS34A	0.72	0.21	0.81	3-3/8	1/2	2-1/2	2-5/8
KVS40A	0.72	0.47	1.03	4	1/2	3-1/8	3
KVS44A	0.80	0.47	1.16	4-1/2	5/8	3-1/2	3-3/8

Blue highlighted items are industry standard and most frequently ordered.

TYPE VG

VISEIT™ Connectors

ACCOMMODATES: COPPER

MATERIAL: COPPER

Copper VISEIT™ connectors are easy to install and will not swivel. The interlocking will not rotate out of the body. Supplied with hex head bolts, VG1 has a slotted hex bolt.

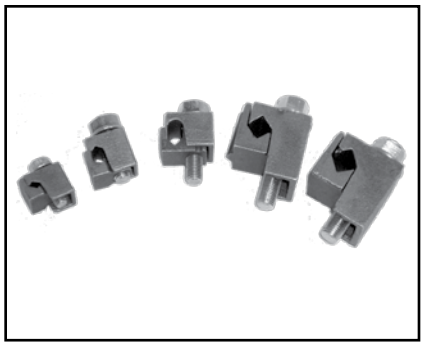

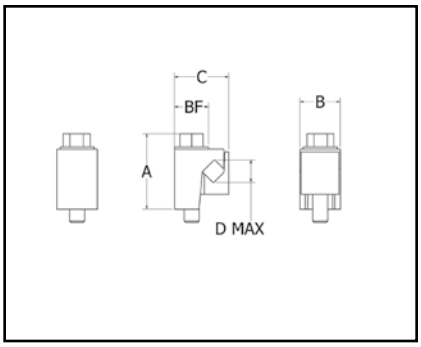

Features & Benefits

- Single tool installation
  - ◊ Keeps other hand free to contain conductors.
- Compact profile after installation
  - ◊ Facilitates laping and alignment with conductors.
- Accomodates a wide range of conductors
  - ◊ Minimizes number of connectors required.
- Side installation of conductors
  - ◊ Eliminates having to seperate pieces during installation.
- Copper alloy body design
  - ◊ Provides combination of strength and corrosion resistance

Catalog Number	Conductor Range ①		A	B	C	Bolt Head (Hex.)	Recommended Torque (In-Lb)
	Max. 2 Conductor	Min. 2 Conductor					
VG1 ②	6 Sol.	10 Sol.	0.94"	0.63"	0.75"	3/8" (Slotted)	110 lbs/in
VG2	4 Str.	8 Str.	1.09"	0.70"	0.81"	9/16"	110 lbs/in
VG3	2 Sol.	6 Sol.	0.98"	0.83"	0.94"	9/16"	150 lbs/in
VG4	1/0 Str.	4 Sol.	1.70"	1.00"	1.33"	9/16"	180 lbs/in
VG5	2/0 Str.	3 Sol.	1.80"	0.98"	1.28"	9/16"	180 lbs/in

① Connectors are capable of accepting any combination of conductors of conductors within specified maximum range (example: VG1 can accept 7 Sol. - 9 Str. combination)
② The VG1 hardware has a slotted hex. The other sizes are unslotted. Hardware is stainless steel.

TYPE UC-L

UNIVERSAL PARALLEL GROOVE CLAMP

ACCOMMODATES:
COPPER, COPPERWELD, AAC†, ACSR†, AAAC AND STEEL

MATERIAL: COPPER (TIN PLATED)

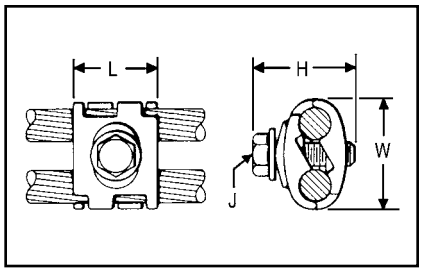

Interlocking finger design accommodates large range of conductor sizes. Tin-plated, cast of high copper alloy and clamped with plated steel bolt, PENETROX™ joint compound recommended with aluminum and ACSR.

Catalog Number	Copper & Alum. (Either Groove)	ACSR†, 6201, 5005	Copperweld	Steel		Dimensions				Wrench (Cross flats)	Torque in - lb
				Nom. Dia.	AWG	L	H	J	W		
UC8W26-L	8 Sol. - 2/0 Str.	6 - 1/0	8 Sol. - 7 #7	5/32 - 7/16	8 Sol. - 4-3 Str.	1	1-1/2	5/16	1-7/16	1/2	180
UC2W28-L	2 Sol. - 4/0 Str.	3 - 4/0	3 #8 - 7 #6	9/32 - 9/16	4 - 3 Str. - 4 - 3 Str.	1-1/8	1-1/2	3/8	1-3/4	9/16	250

† Accommodates compact and compressed conductors within diameter range.
To ensure proper tightening torque use BURNDY® BTW Torque Wrenches.
Torque values are for max. conductor sizes.

TYPE UC-K

UNIVERSAL PARALLEL GROOVE CLAMP

ACCOMMODATES: COPPER, COPPERWELD, AAC, ACSR, AAAC AND STEEL

MATERIAL: COPPER (TIN PLATED)

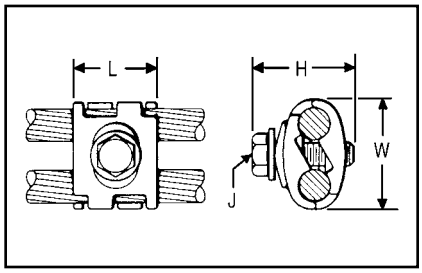

Interlocking finger design accommodates large range of conductor sizes. Tin-plated, cast of high copper alloy and clamped with silicon bronze DURIUM™ bolt, PENETROX™ joint compound recommended with ACSR. Applications include grounding for the Cable TV industry.

Catalog Number	For Use With:	Conductor Range				Dimensions				Wrench Size (Cross flats)	Torque in - lb
		Groove A		Groove B							
		Maximum Size	Minimum Size	Maximum Size	Minimum Size	L	H	J	W		
UCK-1UL †	Aluminum or Galvanized Steel Strand to Copper or Copper Bonded Steel Wire	1/0 ACSR 7/16 Galvanized Steel Strand	#6 ACSR	2/0 Str. Copper 7/16 Copperweld, 2A Copperweld	#8 Sol. Copper 9-1/2D Copperweld	1	1-7/16	5/16	1-7/16	1/2	180
UCK-2UL	Aluminum or Galvanized Steel Strand to Aluminum or Galvanized Steel Strand	1/0 ACSR 7/16 Galvanized Steel Strand	#6 ACSR	1/0 ACSR or 7/16 Galvanized Steel Strand	#6 ACSR					1/2	180
UCK-3UL	Copper to Copper	2/0 Str. Copper 7/16 Copperweld 2A Copperweld	#8 Sol. Copper 9-1/2D Copperweld	2/0 Str. Copper 7/16 Copperweld 2A Copperweld	#8 Sol. Copper 9-1/2D Copperweld					1/2	180

† Accommodates compact and compressed conductors within diameter range.
To ensure proper tightening torque use BURNDY® BTW Torque Wrenches.
Torque values are for max. conductor sizes.

Blue highlighted items are industry standard and most frequently ordered.

TYPE CP-A

PARALLEL GROOVE CLAMP

ACCOMMODATES:
COPPER, COPPERWELD,
AAC†, ACSR, AAAC AND STEEL

MATERIAL: ALUMINUM (cast),
Aluminum Hardware

Type CP-A is recommended for tap or parallel connections. High strength, high conductivity aluminum body and hardware provide corrosion resistant assembly. Long contact surface insures excellent contact and full conductivity. PENETROX™ joint compound recommended for all combinations.

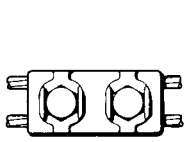

Fig. 1

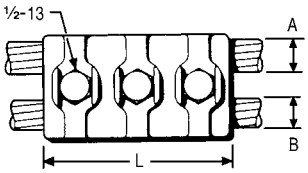

Fig. 2

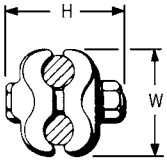

End View

Catalog Number	Groove A		Groove B		Fig. No.	Dimensions			Wrench Size (cross flats)	Torque in - lb
	ACSR, 6201, 5005	Copper & Aluminum	ACSR, 6201, 5005	Copper & Aluminum		L	H	W		
CP26A26A	1/0	3/0 Sol. - 2/0 Str.	1/0	3/0 Sol. - 2/0 Str.	1	4"	2-7/8"	2.13	3/4	150
CP27A27A	2/0 101.8 (12-7) 110.8 (12-7)	4/0 Sol. - 3/0 Str.	2/0 101.8 (12-7) 110.8 (12-7)	4/0 Sol. - 3/0 Str.						250
CP28A28A	3/0 134.6 (12-7)	4/0 Str.	3/0 134.6 (12-7)	4/0 Str.						250
CP29A29A	4/0 159 (12-7) 203 (8-7)	250 266.8	4/0 159 (12-7) 203 (8-7)	250 266.8						325
CP30A30A	176.9 (12-7) 190.8 (12-7) 266.8 (18-1, 6-7, 26-7)	300	176.9 (12-7) 190.8 (12-7) 266.8 (18-1, 6-7, 26-7)	300	2	4-1/2"		2.38		325
CP31A31A	211.3 (12-7) 300 (26-7, 30-7) 336.4 (18-1)	336.4 350	211.3 (12-7) 300 (26-7, 30-7) 336.4 (18-1)	336.4 350						325
CP32A32A	203.2 (16-19) 336.4 (26-7, 30-7) 397.5 (18-1)	397.5 400	203.2 (16-19) 336.4 (26-7, 30-7) 397.5 (18-1)	397.5 400		5"	3"	2.50		325
CP34A34A	397.5 (26-7, 30-7) 477 (18-1)	450 477 500	397.5 (26-7, 30-7) 477 (18-1)	450 477 500						325
CP37A37A	500 (30-7) 556.5 (24-7, 26-7, 30-7) 636 (36-1) 605 (24-7)	636	500 (30-7) 556.5 (24-7, 26-7, 30-7) 636 (36-1) 605 (24-7)	636		5-1/4"	3-3/8"	3.00		325

† Accommodates compact and compressed conductors within diameter range.
For other sizes contact factory.
Not recommended for copper to copper applications. Use copper connector.
To ensure proper tightening torque use BURNDY® BTW Torque Wrenches.

Blue highlighted items are industry standard and most frequently ordered.

TYPE VP

PARALLEL GROOVE CLAMP

ACCOMMODATES: COPPER

MATERIAL: COPPER

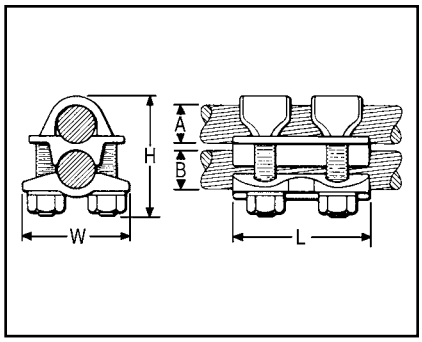

Multiple V-bolt connector especially suited for flexible or extra flexible conductors.Made of high strength, high conductivity copper. Clamping elements accommodate a range of conductor sizes in either groove. V-bolts provide high pressure and compress the conductor over long contact area. Also recommended for jumper connections.

Catalog Number	Groove A	Groove B	Dimensions			Wrench Size (Cross flats)	Torque in - lb
			L	H	W		
VP2828	1/0 Str. - 4/0 Str.	1/0 Str. - 4/0 Str.	2-3/4"	2-1/8"	1.75"	9/16	250
VP3030	1/0 Str. - 300	1/0 Str. - 300	3-1/8"	2-1/2"	2.00"	11/16	325
VP3430	300 - 500		3-1/4"	3-1/8"	2.50"	3/4	375
VP3434		300 - 500					
VP4030	500 - 800	1/0 Str. - 300	3-1/2"	4-3/8"	2.88"	7/8	500
VP4040		500 - 800	3-3/4"				
VP4440	750 - 1000		3-7/8"	5"	3.19"		
VP4646	1000 - 1500	1000 - 1500	4-1/2"	5-3/8"	3.50"	15/16	600

To ensure proper tightening torque use BURNDY® BTW Torque Wrenches.

TYPE UW-R

CLIPIT™

DEAD END CLAMP

ACCOMMODATES:
AAC†, ACSR†, AND AAAC

MATERIAL: ALUMINUM (Cast)

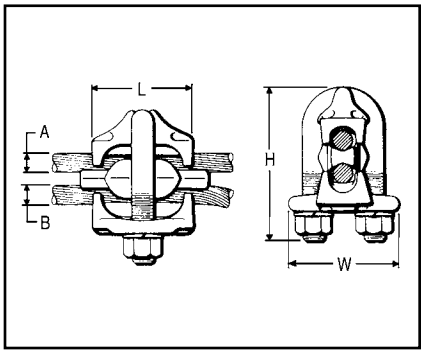

High strength aluminum casting with galvanized steel U-bolt, extra long aluminum spacer, and caps that confine strands. Holding strength of installations using two CLIPIT™ deadends exceeds rated breaking strength of conductor. Use of PENETROX™ joint compound is recommended.
RUS Accepted

Catalog Number	Run A		Tap B		Dimensions			Wrench	Torque in - lb
	ACSR, 6201, 5005	Aluminum	ACSR, 6201, 5005	Aluminum	L	H	W		
UW2R	6 - 2	6 Str. - 2 Str.	6 - 2	6 Str. - 2 Str.	1-1/2"	2-5/8"	1.82"	9/16	150
UW25R	6 - 1/0	6 Str. - 2/0 Str.	6 - 1/0	6 Str. - 2/0 Str.	1-7/8"	2-7/8"	1.98"		180

† Accommodates compact and compressed conductors within diameter range.
To ensure proper tightening torque use BURNDY® BTW Torque Wrenches.

Blue highlighted items are industry standard and most frequently ordered.

TYPE UC

PARALLEL GROOVE CLAMP

ACCOMMODATES: COPPER

MATERIAL: COPPER

Type UC connector accommodates large range of conductors in either groove, reducing inventory to a minimum. Interlocking finger design provides firm grip with maximum contact length. High strength, corrosion resistant silicone bronze hardware. One wrench installation.

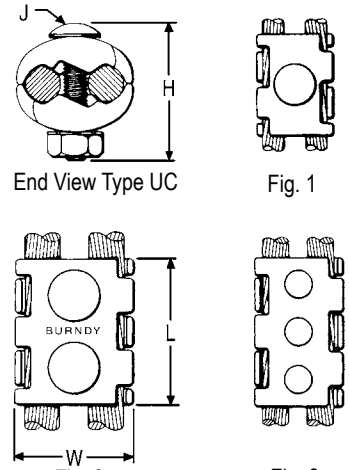

Catalog Number	Conductor (Either Groove)	Figure Number	Dimensions				Wrench Size (Cross flats)	Torque in - lb
			L	H	J	W		
UC6W25	6 Sol. - 1/0 Str.	1	1-3/4"	1-5/8"	3/8"	1-3/8"	9/16	180
UC4W28	4 Sol. - 4/0 Str.	2	2-1/8"	2"		1-3/4"		250
UC2W30	2 Sol. - 300		2-3/8"	2-1/8"		2"		325
UC2834	4/0 Str. - 500	3	4-1/4"	2-7/8"	1/2"	2-1/2"	3/4	375
UC3040	300 - 800			3-3/8"		3"		500
UC3444	500 - 1000			3-5/8"		3-1/2"		500

To ensure proper tightening torque use BURNDY® BTW Torque Wrenches

TYPE CP

PARALLEL GROOVE CLAMP

ACCOMMODATES: COPPER

MATERIAL: COPPER

High strength, high copper alloy Type CP is recommended for heavy duty parallel connections. Silicon bronze DURIUM™ hardware and cast copper body provides corrosion resistant assembly. Long contact surface provides excellent contact and assures full conductivity.

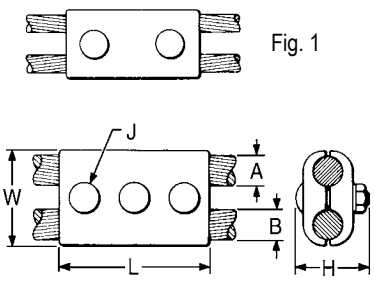

Catalog Number	Groove		Figure Number	Dimensions			Wrench Size (Cross flats)	Torque in - lb
	A	B		L	J	W		
CP2C2C	2 Str.	2 Str.	1	2-1/2"	3/8"	1-1/4"	9/16	150
CP2525	1/0 Str.	1/0 Str.		3"		1-5/8"		150
CP2626	2/0 Str.	2/0 Str.						150
CP2828	4/0 Str.	4/0 Str.	2	4"		2"		250
CP2929	250	250						325
CP3434	500	500		5"	1/2"	2-1/2"	3/4	325

For other sizes contact factory.

To ensure proper tightening torque use BURNDY® BTW Torque Wrenches

Blue highlighted items are industry standard and most frequently ordered.

TYPE QPX

VERSITAP™

ACCOMMODATES:
COPPER, COPPERWELD

MATERIAL: COPPER

The VERSITAP™ Type QPX is recommended for Tee, Cross, Parallel, Butt and Tap connections. Range-taking, only 10 connectors required to accommodate conductor sizes from #6 Str. to 1000 kcmil. Edges are rounded for easy taping. Made of high strength, high-conductivity copper alloy and silicon bronze DURIUM™ hardware.

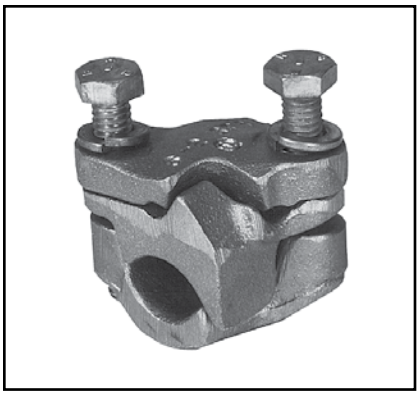

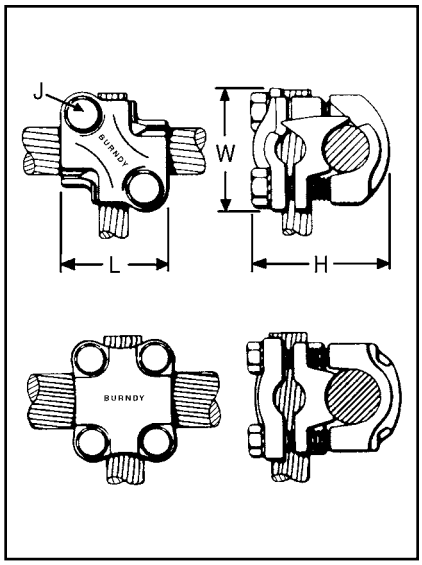

PARALLEL

TAP

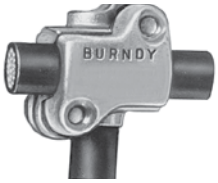
TEE

CROSS

BUTT

Catalog Number	Run			Tap			Dimensions				Wrench Size (Cross Flats)	Torque in - lb
	Copper Str - RUN	Copperweld Solid - RUN	Copperweld Str - RUN	Copper Str - TAP	Copperweld Solid - TAP	Copperweld Str - TAP	L	H	J	W		
QPX2C2C	6 Str. - 2 Str.	5 Sol. - 3 #7	8A - 4A	6 Str. - 2 Str.	5 Sol. - 3 #7	8A - 4A	1-3/8	1.50	5/16	1-3/8	1/2	150
QPX282C	1 Str. - 4/0 Str.	7 #9 - 7 #5	3A - 3/0V	6 Str. - 2 Str.	5 Sol. - 3 #7	8A - 4A		2.06		1-9/16		250
QPX2828				1 Str. - 4/0 Str.	7 #9 - 7 #5	3A - 3/0V	1-7/8	2.38	3/8	1-13/16	9/16	250
QPX342C	250 - 500 kcmil	19 #19 - 19 #6	4/0 EK	6 Str. - 2 Str.	5 Sol. - 3 #7	8A - 4A	1-3/8	2.50	5/16	1-7/8	1/2	250
QPX3428				1 Str. - 4/0 Str.	7 #9 - 7 #5	3A - 3/0 V	1-3/4	2.75	3/8	2-1/16	9/16	250
QPX3434				250 - 500 kcmil	19 #19 - 19 #6	4/0 EK	2	3.00		2-3/16		250
QPX442C	500 - 1000 kcmil	19 #6	—	6 Str. - 2 Str.	5 Sol. - 3 #7	8A - 4A	1-3/8	2.63	5/16	2-1/4	1/2	250
QPX4428			—	1 Str. - 4/0 Str.	7 #9 - 7 #5	3A - 3/0V	1-7/8	2.88	3/8	2-7/16	9/16	250
QPX4434			—	250 - 500 kcmil	19 #19 - 19 #6	4/0 EK	2	3.06				250
QPX4444			—	500 - 1000 kcmil	19 #6	—	2-5/8	3.44		2-9/16		250

To ensure proper tightening torque use BURNDY® BTW Torque Wrenches

Blue highlighted items are industry standard and most frequently ordered.

TYPE VT

T-CONNECTOR

ACCOMMODATES: COPPER

MATERIAL: COPPER

High copper alloy T-connector for cable run, cable tap. V-bolt clamping elements accommodate large range of cable and are particularly suited for extra flexible cable. One-wrench installation.

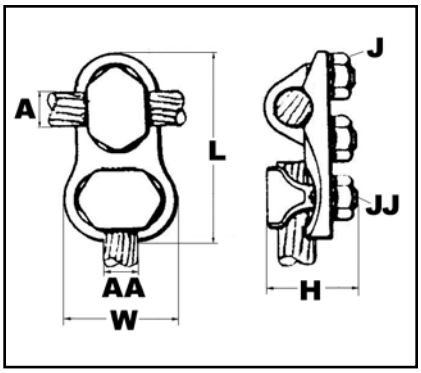

Catalog Number	Conductor		H	L	W	Torque Ratings			
	Run (A)	Tap (AA)				Wrench 1	Wrench 2	Torque 1	Torque 2
VT2C2C	8 AWG - 2 AWG	8 AWG - 2 AWG	1-3/8"	2-3/8"	1"	7/8	7/8	275	275
VT2525	6 AWG - 1/0	6 AWG - 1/0	1-5/8"	2-5/8"	1-1/4"	1	1	385	385
VT2825	1/0 - 4/0 AWG			3-1/8"	1-1/4"	9/16	1	250	385
VT2828		1/0 - 4/0 AWG		3-3/8"	1-3/4"	9/16	9/16	250	250
VT3025	1/0 - 300 kcmil	6 AWG - 1/0	1-7/8"	3-3/8"	1-1/8"	11/16	1	325	385
VT3030		1/0 - 300 kcmil		3-1/2"	2"	11/16	11/16	325	325
VT3425	300 kcmil - 500 kcmil	6 AWG - 1/0	2-3/8"	3-5/8"	1-1/4"	3/4	1	375	385
VT3428		1/0 - 4/0 AWG		3-1/2"	1-3/4"	9/16	3/4	250	250
VT3430		1/0 - 300 kcmil		3-5/8"	2"	3/4	1	480	385
VT3434		300 kcmil - 500 kcmil		3-3/4"	2-1/4"	3/4	3/4	480	480
VT4040	500 kcmil - 800 kcmil	500 kcmil - 800 kcmil	2-5/8"	4-3/8"	2-5/8"	7/8	7/8	600	600
VT4425	750 kcmil - 1000 kcmil	6 AWG - 1/0	2-7/8"	4-3/4"	1-1/4"	15/16	1	660	385
VT4428		1/0 - 4/0 AWG		4-1/8"	1-3/4"	15/16	9/16	660	240
VT4834	1500 kcmil - 2000 kcmil	300 kcmil - 500 kcmil	4-1/4"	5-1/4"	2-1/4"	1-1/8	3/4	1050	480

To ensure proper tightening torque use BURNDY® BTW Torque Wrenches

TYPES UCG-R & UCG-RS

TAPIT™ PARALLEL CLAMP

ACCOMMODATES: COPPER, AAC†, ACSR†, AAAC

MATERIAL: ALUMINUM

Multiple purpose parallel groove clamp made of high strength, high conductivity, non-copper bearing aluminum alloy. Properly proportioned to minimize stress corrosion and deterioration by galvanic action.

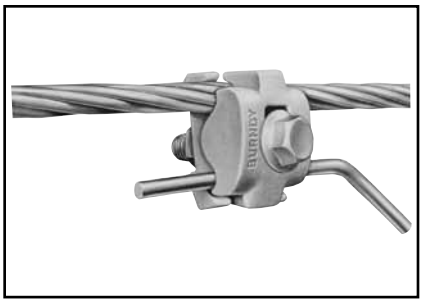

RUS Accepted

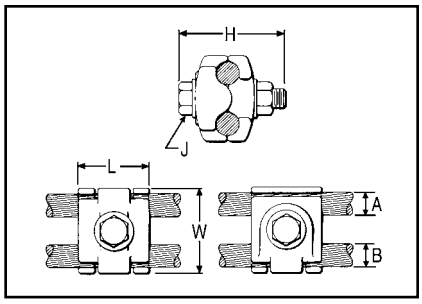

Interlocking fingers on connector body halves prevent mismatching. Square shank, hex head, round collar, high strength galvanized steel bolt allows one or two-wrench installation.

Also supplied pre-filled with PENETROX™ joint compound and Stripsealed to limit oxide growth and to increase the life of the connection.

Catalog Number		Groove A		Groove B		Dimensions				Wrench Size	Torque In-lb
With Stripseal	Without Stripseal	Copper & Aluminum†	ACSR†, 6201, & 5005	Copper & Aluminum†	ACSR†, 6201, & 5005	L	H	J	W		
UCG25R2RS**	UCG25R2R**	6 Sol. - 1/0 Str.	8 Str. - 1/0 Str.	6 Sol. - 2 Str.	8 - 2	1-1/8"	1-7/8"	5/16"	1-3/8"	1/2	180
UCG25RS	UCG25R	8 Str. - 1/0 Str.	6- 1/0	8 Str. - 1/0 Str. *	6 - 1/0	1-3/8"	2-1/8"	3/8"	1-5/8"	9/16	150
UCG28RS	UCG28R	1/0 Str. - 4/0 Str.	1/0 - 4/0	1/0 Str. - 4/0 Str.	6 - 4/0	1-3/8"	2-1/5"	3/8"	1"	3/4	250
UCG32RS	UCG32R	1/0 Str. - 397.5	1/0 - 336.4	8 Str. - 2/0 Str.	6 - 1/0	1-1/2"	2-5/8"	3/8"	2-1/8"	9/16	250

* Maximum recommended combinations: 1/0 Aluminum or ACSR Run - #2 Str. Copper Tap; 1/0 Copper Run - 1/0 Aluminum or ACSR Tap.
† Accommodates compact and compressed conductors within diameter range.

** Supplied with galvanized steel, square shank bolt.
Not recommended for copper to copper applications. Use a copper connector to increase connection life.

For proper installations use BURNDY® BTW Toque Wrenches.

TYPES UC-R & UC-RS

TAPIT™ PARALLEL CLAMP

ACCOMMODATES: COPPER, AAC†, ACSR†, AAAC

MATERIAL: ALUMINUM

High strength, high conductivity, non-copper bearing aluminum alloy, properly proportioned to minimize stress corrosion and deterioration by galvanic action.

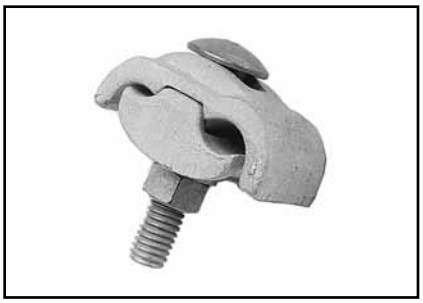

RUS Accepted

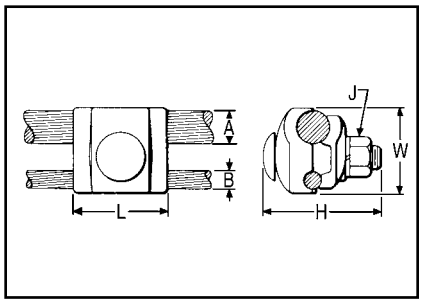

Keying tabs on connector body halves prevent mismatching. Square shank, high strength galvanized steel bolt allows one wrench installation.

Also supplied pre-filled with PENETROX™ joint compound and Stripsealed.

Catalog Number		Groove A		Groove B		Dimensions				Wrench	Torque
With Stripseal	Without Stripseal	Copper & Aluminum†	ACSR†, 6201, & 5005	Copper & Aluminum†	ACSR†, 6201, & 5005	L	H	J	W		
UC25R2RS	UC25R2R	8 Sol. - 1/0 Str.	6 - 1/0	8 Sol. - 2 Str.	6 - 2	1-1/8"	1-5/8"	5/16"	1-3/8"	1/2	180
UC28RS	UC28R	1/0 Str.- 4/0 Str.	1/0 - 4/0	8 Sol. - 1/0 Str.	6 - 1/0	1-3/8"	2-3/8"	3/8"	1-7/8"	9/16	250
UC32RS	UC32R	1/0 Str. - 397.5	336.4	6 Sol. - 2/0 Str.	6 - 1/0	1-1/2"	2-3/8"	3/8"	2-1/4"	9/16	250
—	UC33R	4/0 Str. - 400	336.4	6 Sol. - 2/0 Str.	6 - 2/0	1-3/4"	2-3/4"	1/2"	2-1/4"	3/4	250

* Maximum recommended combinations: 4/0 Aluminum or ACSR Run - #2 Str. Copper Tap.
† Accommodates compact and compressed conductors within diameter range.

Not recommended for copper to copper applications. Use a copper connector to increase connection life.

For proper installations use BURNDY® BTW Toque Wrenches.

Blue highlighted items are industry standard and most frequently ordered.

TYPE UCT FASTAP™ with Lineman Assist™

ACCOMMODATES: AAC, AAAC, ACSR, ACAR, Messenger Guy and Copper Conductors

MATERIAL: Aluminum
Galvanized steel hardware

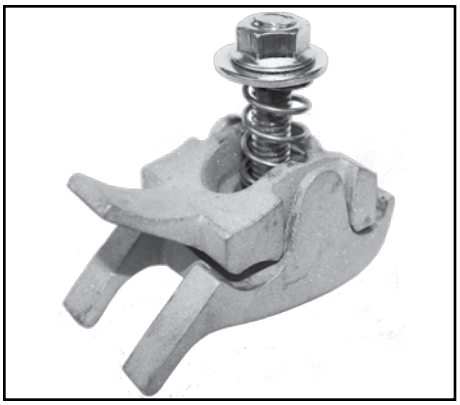

The BURNDY FASTAP™ with Lineman Assist™ utilizes a spring system that acts as a third hand to assist in installation. This system helps secure the tap conductor while installing on Primary, Secondary, and service applications. Duck bill handle simplifies installation by providing a handle to easily hold the connector while wearing dielectric gloves. Conductor side entry facilitates installation and helps keep inhibitor in the connector. Strip sealed and prefilled with PENETROX™ joint compound to limit oxide growth and increase the life of the connection.

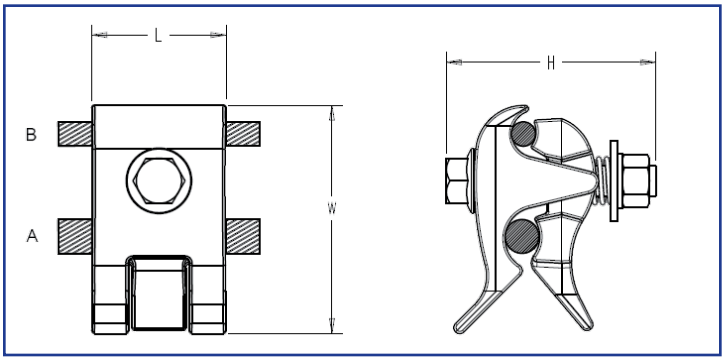

Catalog Number	Conductor Range				Conductor Diameter				Torque (in-lb)	Wrench Size	Dimensions		
	Groove A (Run)		Groove B (Tap)		Groove A (Run)		Groove B (Tap)				L	H	W
	Copper & Aluminium	ACSR, 6201 & 5005	Copper & Aluminium	ACSR, 6201 & 5005	Min	Max	Min	Max					
UCT26RS	8 Sol - 2/0 Str	6 Str - 2/0 Str	8 Sol - 2/0 Str	6 Str - 2/0 Str	0.13	0.45	0.13	0.45	250	9/16	1.62	2.62	2.50
UCT32RS	1 Sol - 400	2 Str-336.4	8 Sol - 4/0 Str	6 Str- 4/0 Str	0.29	0.73	0.13	0.56	250	9/16	1.62	2.62	2.82

Remove "S" for no PENETROX™
Add "SS" for stainless steel hardware
Add "C" to include a cover
Add "HN" for shear nut
Cover may be ordered separately (UCTCOVER)

— Not recommended for Copper to Copper applications; use copper connector

To ensure proper tightening torque, use BURNDY® BTW Torque Wrenches.

Blue highlighted items are industry standard and most frequently ordered.

TYPE UC KIT

UC connector accommodates a large range of copper conductors in either groove. Kits include connector and cover.

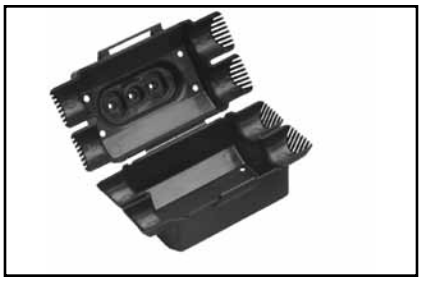

Catalog Number	Conductor (Either Groove)	Dimensions				Wrench	Torque
		L	H	J	W		
UC6W25CONKIT	6 Sol. - 1/0 Str.	1-3/4"	1-5/8"	[3/8]"	1-3/8"	9/16	240
UC4W28CONKIT	4 Sol. - 4/0 Str.	2-1/8"	2"		1-3/4"		

Note: For connectors with break-away bolt contact factory.

UCCOVER1BOX25

TAPIT™ COVER

For Selected UC and UCG Tap Connectors

High density Polyethylene cover accommodates several sizes of UC and UCG connectors. One piece design. Simply slip over the connector and snap shut. Supplied in black.

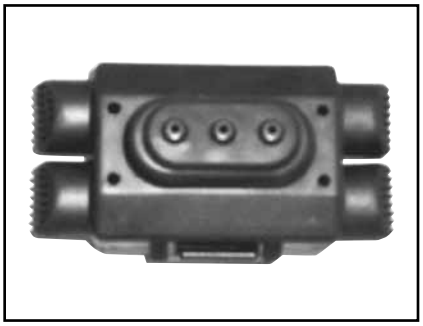

UCCOVER1 for use with:

UCG25R2RS	UCG25R2R
UCG25RS	UCG25R
UCG28RS	UCG28R
UC25R2RS	UC25R2R
UC28RS	UC28R
UC6W25	UC4W25

UCTCOVER

FASTAP™ COVER

For Selected UCT and UCG Tap Connectors

High density Polyethylene cover accommodates all FASTAP™ connectors and select UCG connectors. One piece design. Simply slip over the connection and snap shut. Supplied in black.

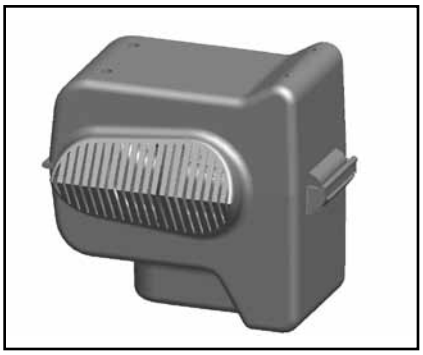

UCTCOVER for use with all styles of:

UCT26RS
UCT32RS
UCG32RS
UCG26RS

Blue highlighted items are industry standard and most frequently ordered.

TYPE LSC

CATCHER

ACCOMMODATES:
AAC AND ACSR PRIMARY
COVERED CONDUCTOR
(TREE WIRE)

MATERIAL: ALUMINUM (cast)

Cast aluminum lightning shield clamp with a galvanized steel eye bolt for use on covered aluminum and ACSR primary overhead distribution conductors ("Tree Wire").

They are designed to protect the "Tree Wire" from burn-down causing service interruption during high lightning activity. For further application details contact the factory.

Conductor groove is pre-filled with PENETROX™ A13, which is compatible with cable insulation and individually bagged.

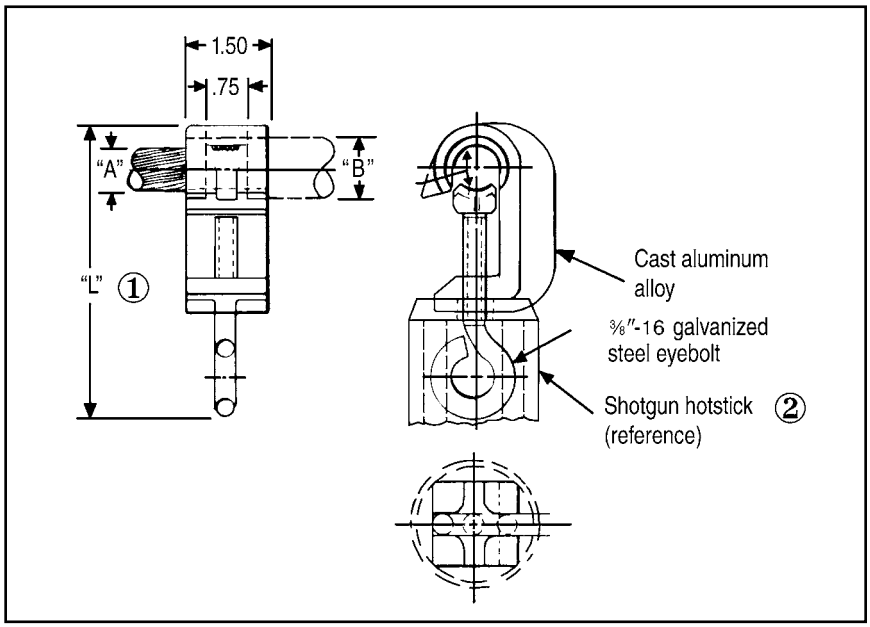

Catalog Number	Cable	Accommodates Cable Dia. "A"	Insul. Dia. "B" (Max.)	"L"
LSC1/0	1/0 Str. ACC - 1/0 ACSR	0.368 - 0.398	0.65"	4.50"
LSC1/0-1	1/0 Str. AAC - 1/0 ACSR	0.368 - 0.398	0.83"	4.50"
LSC556	4/0 Str. - 556.5 AAC	0.528 - 0.858	1.16"	5.90"
LSC556-1	4/0 Str. - 556.5 AAC	0.528 - 0.858	1.34"	5.90"

① Approx. assembly length over eyebolt with cable clamped. Also approx. eyebolt position when shipped.
② Assembly can be installed using a shotgun hotstick as shown. Assembly instructions are supplied with each connector.

COMPRESSION TAP CONNECTORS

The BURNDY line of compression connectors are wide range-taking; accommodate copper, aluminum and ACSR; are easy to install; and are dependable and economical. They are designed to be installed with BURNDY® "matche" hand, hydraulic, and power-driven hydraulic tooling. The connector line consists of C-shaped, Figure 3, Figure 6-shaped, and HYCRIMP™ tap connectors, disconnectable T-taps, terminals and stirrups.

The copper CRIMPIT™ is a range-taking, reversible, C-shaped compression tap conector for combinations of copper conductors. Twelve connectors take tap combinations from #10 AWG through 4/0, and all sizes are installed with dies that also install aluminum connectors. Sizes accommodating conductors up to #2 may be installed with the MD6 and OUR840 family of tools. All sizes may be installed with the Y35 or Y750 family of tools. They make "hot" installation easy by permitting the lineman to grip the CRIMPIT™ in the compression tool and then place it on the line. The tap is then inserted and the CRIMPIT™ is compressed. Massive C-shape forces tap and line conductors together to form dependable, low-cost, low-resistance connections.

The CABLELOK™ CRIMPIT™ is a range-taking universal and reversible, Figure 3-shaped aluminum compression tap connector with an adjustable spacer which separate the conductors. It accommodates combinations of copper, aluminum, and ACSR conductors from #6 up to 4/0, and is installed with the common O and D3 dies. The broad range capacity of each CABELOK™ CRIMPIT 2 reduces the number of connectors required and simplifies connector selection.

The spacer holds the run or tap in place permitting the lineman either to approach the line with the connector held in the tool and with the tap in the connector, or to assemble the connector and tap on the line and then bring up the tool to crimp.

Each CABELOK™ CRIMPIT™ is pre-filled with PENETROX™ joint compound and individually bagged. These packages are clearly marked with the entire conductor range of the connector as well as pertinent tooling information. The open side of the CABELOK™ CRIMPIT™ makes "hot" installations easy by allowing the connector to be carried to the energized line in the crimping tool (MD6, Y35, or Y750 families hot-line types).

The Figure 6-shaped aluminum compression tap connector is one of the widest range-taking compression tap connectors available. It accommodates copper, aluminum, or ACSR conductors in very broad ranges. Only four connectors are required to accommodate a range from #6 to 600 kcmil. This broad range is made possible by the long ram stroke of the Y35 and Y750 family of tools.

HYCRIMP™ compression tap connectors accomodate ACSR, stranded copper or aluminum, solid copper or aluminum, and compact conductors. Seventeen sizes are available to accommodate all conductors from #6 solid to 954 kcmil compact. All HYCRIMP™ connectors can be installed with industry standard O, D, N and R dies. Each connector is factory-filled with BURNDY® PENETROX™ joint compound, and individually boxed for ease of handling, identification, and installation.

The BURNDY® line of disconnectable T-taps and jumper loop slices offer an economical approach to sectionalizing or isolating equipment on energized lines. They combine the best featurres of compression and mechanical connectors. The pads can be easily assembled or separated from each other with hot-line tools.

The STIRRUP™ combines a compression C-shaped Figure 6-shaped or H-shaped element for the run conductor, and a factory installed bail which accommodates a hot-line clamp. The line element can be gripped in teh tool and carried to the line and then crimped.

Note: Aluminum bodied compression tap connectors are not recommended for making coper to copper connections. Two connectors are recommended when feeding a line in both directions.

TYPE YC-C

COPPER CRIMPIT™

ACCOMMODATES: COPPER, COPPERWELD

MATERIAL: COPPER

Range-taking compression tap connector made of pure copper. Designed to be gripped in the jaws or dies of installation tool, then slipped directly over line for easy installation. Also used for deadending.

RUS Accepted

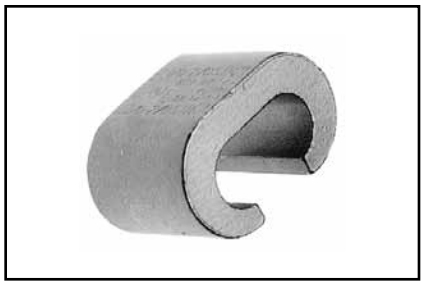

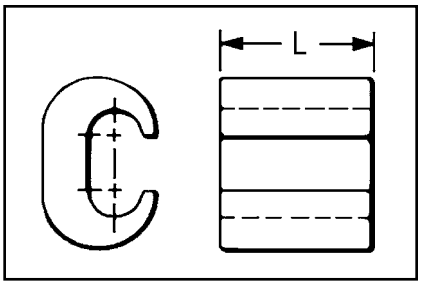

Copperweld-Copper Conductors

8A - Use CRIMPIT™ accommodating 6 Str. Copper
6A - Use CRIMPIT™ accommodating 4 Str. Copper
4A - Use CRIMPIT™ accommodating 2 Str. Copper
2A - Use CRIMPIT™ accommodating 1/0 & 2/0 Copper

** Multiple crimp die set. Makes more than one crimp per tool compression. Figure ( ) indicates number of compressions.
† U Die with adapter PT-6515.
‡ U Die with adapter PUADP-1.
* Not UL Listed.
For faster installations use BURNDY® PATRIOT® family of battery tools.

Catalog Number	Run	Tap	L	Die Index	Tools, Die Set Catalog Number, & (# of Crimps)			CRIMPIT™ for 1 Str. Copper	
					MD7, MD6	OUR840	Y35, Y750, Y45 †, Y46 ‡	Run	Tap
YC10C10*	12 Sol. - 10 Str.	12 Sol. - 10 Str.	3/8	238	W238 (1)	W238 (1)	U238 (1)	—	—
YC8C8	8 Sol. - 8 Str.	10 Sol. - 8 Str.	1/2	162	W162 (2)	W162 (2)	U162** (1)		
YC4C8	6 Sol. - 4 Str.	8 Sol. - 8 Str.	5/8	BG or 5/8	BG (2) W-BG** (1)	XBG (2)	U-BG (1)		
YC4C6		6 Sol. - 6 Str.							
YC4C4		6 Sol. - 4 Str.							
YC2C4	2 Sol. - 2 Str.	8 Sol. - 4 Str.	3/4	C	W-C (2)	—	U-C (1)	1 Str.	6.8 Str., 8 Sol.
YC2C2	2 Sol. - 2 Str.	2 Sol. - 2 Str.				—		—	—
YC26C2	1/0 Str. - 2/0 Str.	8 Sol. - 2 Str.	7/8	E or O	—	—	U-E (3) U-O (1)	1 Str.	1 or 2 Str.
YC26C26		1/0 Str. - 2/0 Str.				—		—	—
YC28C2	3/0 Str. -4/0 Str.	6 Sol. - 2 Str.	1-1/6	F or D3	—	—	U-F (3) U-D3** (1)		
YC28C26		1/0 Str. - 2/0 Str.				—			
YC28C28		3/0 Str. - 4/0 Str.				—			

TYPE YP-C

COPPER CRIMPIT™

ACCOMMODATES: COPPER

MATERIAL: COPPER

Figure "6" -shaped, wide range-taking copper, compression tap connector for primary service taps and secondary service drops. Connector can be gripped in tool and slipped over the line for easy installation.

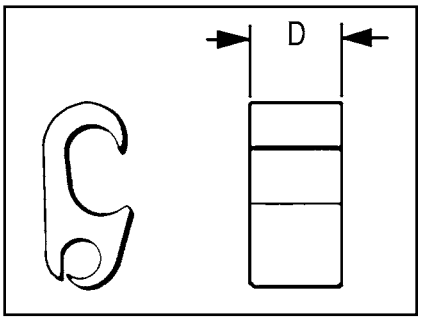

Catalog Number	D	Run	Tap	Die Index	Tools, Die Set Catalog Number, & (# of Crimps) Y35, Y750, Y45 †, Y46 ‡
YP2C2	0.75	6 Sol. - 2 Str.	6 Sol. - 2 Str.	O	U-O (1)
YP28C28	1.00	2/0 Sol. - 4/0 Str.	2/0 Sol. - 4/0 Str.	D	U-D3 (1)
YP29C26	0.75	1/0 Sol. - 250	4 Sol. - 2/0 Str.		

† U Die with adapter PT-6515.
‡ U Die with adapter PUADP-1.

For faster installations use BURNDY® PATRIOT® family of battery tools.

Blue highlighted items are industry standard and most frequently ordered.

TYPE YC-A

ALUMINUM CRIMPIT™

ACCOMMODATES: AAC (STR, COMPRESSED, COMPACT), ACSR AND AAAC

MATERIAL: ALUMINUM

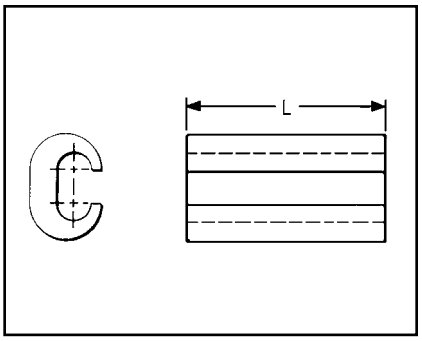

Range-taking, C-shaped aluminum compression tap, or dead-ending connector designed to eliminate effects of cold flow. Can be gripped in tool and slipped over line for easy crimping. Pre-filled with PENETROX™ joint compound and Stripsealed to limit oxide growth and to increase the life of the connection.

Catalog Number	Run		Tap		L	Die Index	Tools, Die Set Catalog Number, & (# of Crimps)	
	Aluminum	ACSR, 6201, 5005	Aluminum	ACSR, 6201, 5005			MD7, MD6	Y35, Y750, Y45 †, Y46 ‡
YC4A6	6 Sol. - 4 Str.	6	6 Sol. & Str.	—	1-1/4"	5/8 or BG	BG (4) W-BG (2)*	U-BG (2)*
YC4A4			4 Sol. & Str.	6				
YC2A4	2 Sol. & Str.	4 - 2	4 Sol. & Str.	6	1-1/2"	C	W-C (4)	U-C (2)*
YC2A2			2 Sol. & Str.	4 - 2				
YC25A4	1/0 Str.	1/0	6 Str. - 4 Str.	6 - 4	1-1/2"	C	W-C (4)	U-C (2)*
YC25A2			2 Sol. & Str.	2	2-1/4"	C	W-C (6)	U-C (3)*
YC25A25	1/0 Str. - 2/0 Str.		1/0 Str. - 2/0 Str.	1/0	1-3/4"	Q	W-Q (6)*	—
YC26A25	1/0 Str. - 2/0 Str.	1/0 - 2/0	1/0 Str.	1/0	2-1/2"	D**	—	U-D (3)
YC26A26			2/0 Str.	2/0				
YC28A2	3/0 Str. - 4/0 Str.	3/0 - 4/0	6 Sol. - 2 Str.	6 - 2	2-3/4"	H	—	U-H (3)
YC28A25			1/0 Str.	1/0				
YC28A26			2/0 Str.	2/0				
YC28A28			3/0 Str. - 4/0 Str.	3/0 - 4/0				
YC33R26	300 - 397.5	336.4 (18-1) (26-7)	2 Str. - 2/0 Str.	2 - 1/0	1-1/2"	R	—	U-R (2)

* Multiple crimp die set; makes more than one crimp per tool compression.
Figure indicates number of compressions.
** Index number "D" is not "D3" Cabelok CRIMPIT™ die.
† U Die with adapter PT-6515.
‡ U Die with adapter PUADP-1.
For faster installations use BURNDY® PATRIOT® family of battery tools.

TYPE YP-U

CABELOK™ CRIMPIT™

ACCOMMODATES: COPPER, AAC (STR,COMPRESSED, COMPACT), ACSR, AND AAAC

MATERIAL: ALUMINUM

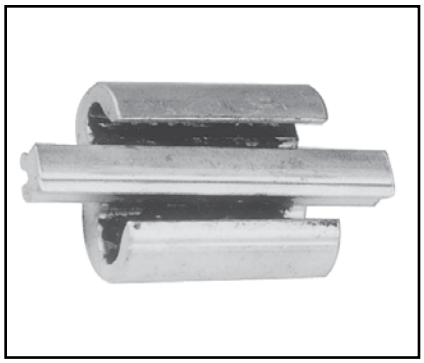

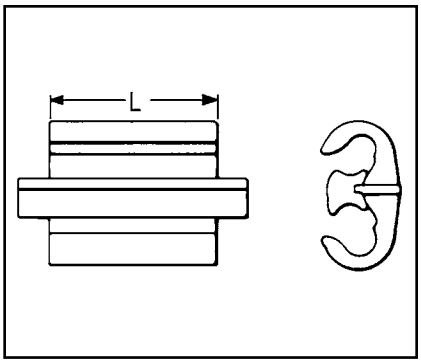

Wide range, universal and reversible, Figure "3" -shaped aluminum connector with adjustable overhanging spacer that separates conductors. Spacer holds run or tap in place permitting lineman to either approach the line ready to crimp, or to assemble connector and tap on run and then crimp. Massive aluminum design minimizes conductor corrosion due to galvanic action. Pre-filled with PENETROX™ joint compound and Stripsealed to limit oxide growth and to increase the life of the connection. Conductor range and tooling information clearly printed on connector and package.

RUS Accepted

Catalog Number	Conductor (See Chart Below for Compressed Conductor)						L	Die Index	Tools, Die Set Catalog Number, & (# of Crimps)	
	Groove A			Groove B						
	Solid	Stranded	ACSR	Solid	Stranded	ACSR			MD7, MD6	Y35, Y750, Y45 †, Y46 ‡
YP2U3*	6, 4, 3 , 2	6, 4, 3	6,4	6, 4, 3 , 2	6, 4, 3	6,4	1-1/2"	O	W-0 (4)	U-0(1)
YP26AU2	1, 1/0, 2/0, 3/0	2, 1, 1/0, 2/0	3, 2, 1, 1/0	6, 4, 3, 2, 1, 1/0	6, 4, 3, 2, 1	6, 4, 3, 2				
YP25U25**	2/0, 3/0	1, 1/0, 2/0	1, 1/0	2/0, 3/0	1, 1/0, 2/0	1, 1/0	1-5/8"	D3	MD6 (4)	U-D3 (1)
YP27AU4	2/0, 3/0, 4/0	1,0 , 2/0, 3/0	1/0, 2/0	6, 4, 3, 2	6, 4, 3	6, 4				
YP27AU2				2, 1, 1/0	3, 2, 1	4, 3, 2				
YP27AU26	3/0, 4/0	2/0, 3/0	2/0	2/0, 3/0	1/0, 2/0	1, 1/0, 2/0				
YP28U2	—	4/0	3/0, 4/0	2, 1, 1/0	4, 3, 2, 1	4, 3, 2				
YP28U26				2/0, 3/0	1/0, 2/0	1, 1/0, 2/0	3-1/2"		MD6 (9)	U - D3 (2)

Catalog Number	Compressed Conductor				L	Die Index	Tool, Die Set Catalog No., & (# of Crimps)	
	Groove A		Groove B					
	Stranded Aluminum	ACSR	Stranded Aluminum	ACSR			MD7, MD6	Y36, Y750,Y45†, Y46‡
YP2U3	6, 4, 3, 2	6, 4, 3	6, 4, 3, 2	6, 4, 3	1-1/2"	O	W-0 (4)	U-0(1)
YP26AU2	2, 1, 1/0, 2/0	2, 1, 1/0, 2,0	6, 4, 3, 2, 1	6, 4, 3, 2, 1				
YP25U25	1/0, 2/0	1/0, 2/0	1/0, 2/0	1/0, 2/0	1-5/8"	D3	MD6 (4)	U-D3 (1)
YP27AU4	2/0, 3/0	1/0, 2/0, 3/0	6, 4, 3	6, 4, 3				
YP27AU2			3, 2, 1	4, 3, 2, 1				
YP27AU26	3/0	2/0, 3/0	1/0, 2/0 , 3/0	1/0, 2/0				
YP28U2	4/0, 250, 266.8	4/0, 266.8, (18/1)	3, 2, 1	4, 3, 2, 1				
YP28U26			1/0, 2/0, 3/0	1/0, 2/0	3-1/2"		MD6 ()	U - D3 (1)
YP28U28	4/0	3/0, 4/0	3/0, 4/0	3/0, 4/0	2-3/4"		—	U - D3 (2)

* TAKES UP to #2 ACSR maximum in either groove if other wire is #2 solid or smaller.
** TAKES DOWN to #2 ACSR minimum in either groove if other groove wire is 1/0 stranded or larger.
† U Die with adapter PT-6515.
‡ U Die with adapter PUADP-1.

Not recommended for copper to copper applications. Use a copper connector to increase connection life.

For faster installations use BURNDY® PATRIOT® family of battery tools.

Blue highlighted items are industry standard and most frequently ordered.

TYPE YPC-U

UNIVERSAL CRIMPIT™

ACCOMMODATES: COPPER, AAC (STR,COMPRESSED, COMPACT), ACSR AND AAAC

MATERIAL: ALUMINUM

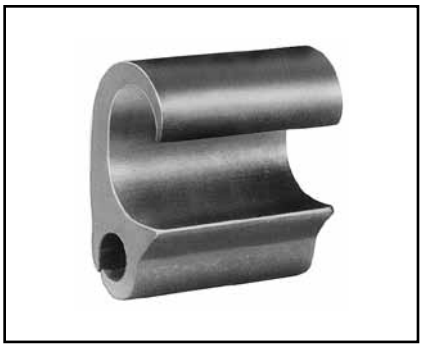

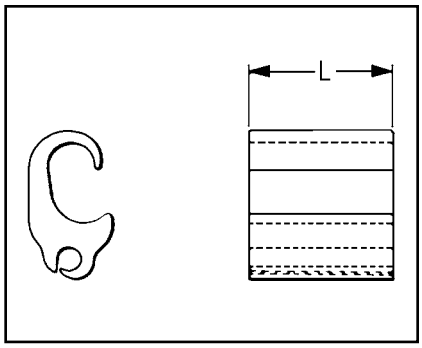

Extra wide range universal connector. Two dies and 5 connectors take run sizes 1/0-600, and tap sizes 6-400. Wide range made possible by long ram travel of BURNDY HYPRESS™ tools. Figure "6"-shape separates run and tap wires, and minimizes galvanic corrosion of conductors. Connector can be gripped in tool and slipped over line for easy installation. Pre-filled with PENETROX™ joint compound and Stripsealed to limit oxide growth and to increase the life of the connection.

① 2/0 Str. Cu Aluminum and 2/0 ACSR may also be installed in run when tap is 3/0 Str. or larger.
② YPC28U4 only may be installed with MD6 HYTOOL™ and the BCT500HS with D3 groove.

† U Die with adapter PT-6515.
‡ U Die with adapter PUADP-1.
Not recommended for copper to copper applications. Use a copper connector to increase connection life.

For faster installations use BURNDY® PATRIOT® family of battery tools.

Catalog Number	Run		Tap		L	Die Index	Tools, Die Set Catalog Number, & (# of Crimps)		
	Aluminum & Copper	ACSR, 5005	Aluminum & Copper	ACSR, 5005			Y35, Y750	Y45 †	Y46 ‡
YPC28U4	3/0 - 4/0 Str. & 4/0 - 250, 266.8 Alum. Compressed	3/0 - 4/0 & 4/0, 266.8 (18/1) ACSR Compressed	6, 4, 3 Str. 6, 4, 3, 2 Sol. & 6, 4, 3 Alum. Compressed	6, 4, 3 ACSR Compressed	1-5/8	D3 ②	U - D3 (1)	U - D3 (1)	U - D3 (1)
YPC28U26	1/0 (7) - 4/0 (7)	1/0 - 4/0	3 Sol. - 2/0 (7)	4 - 1/0	2-3/4	D3	U - D3 (2)	—	—
YPC28U28 ①	3/0 - 4/0 Str. 4/0 Sol. & 4/0, 250, 266.8 Alum. Compressed	3/0 - 4/0 Str. & 3/0, 4/0, 266.8 (18/1) ACSR Compressed	2/0 - 4/0 Str. 4/0 Sol. & 3/0, 4/0, 250, 266.8 Alum. Compressed	2/0 - 4/0 Str. & 3/0, 4/0, 266.8 (18/1) ACSR Compressed	2-3/4	D3	U - D3 (2)	U - D3 (2)	U - D3 (2)
YPC28R28A	3/0 - 4/0 Str. & 4/0 - 250, 266.8 Alum. Compressed	3/0 - 4/0 & 4/0, 266.8 (18/1) ACSR Compressed	3/0 - 4/0 Str. & 4/0 Alum. Compressed	3/0 & 4/0 ACSR Compressed	2-3/4	D3	U - D3 (2)	U - D3 (2)	U - D3 (2)
YPC33R26U	250 (37) - 400 (37)	266.8 (18-1) - 397.5 (18-1)	6 Sol. - 2/0 (19)	6 - 1/0	2-1/8	N	U-N (2)	S-N (2)	P-N (2)
YPC33R28R	250 (37) - 477 (37)	266.8 (18-1) - 397.5 (18-1	2/0 (19) - 4/0 (19)	2/0 - 4/0	8-7/8	N	U-N (3)	S-N (3)	P-N (3)
YPC33R33R	250 (37) - 400 (37)	266.8 (18-1) - 397.5 (18-1	250 (37) - 400 (37)	266.8 (18-1) - 397.5 (18-1)	8-7/8	N	U-N (3)	S-N (3)	P-N (3)
YPC38R26U	477 (19) - 600 (61)	397.5 (26-7) - 556.5 (18-1)	6 Sol. - 2/0 (19)	6 - 1/0	2-1/8	N	U-N (2)	S-N (2)	P-N (2)
YPC36A32	397.5 (19) - 600 (61)	336.5 (26-7) - 556.5 (18-1)	2/0 (7) - 400 (37)	2/0 (6-1) - 397.5 (18-1)	5	Z	—	S-Z (3)	—
YPC36A36	397.5 (19) - 600 (61)	336.5 (26-7) - 556.5 (18-1)	397.5 (19) - 600 (61)	397.5 (26-7) - 556.5 (18-1)	6-3/4	Z	—	S-Z (4)	—
YPC40A32	600 (61) - 800 (61)	556.6 (18-1) - 795 (26-7)	2/0 (7) - 400 (37)	2/0 (6-1) - 397.5 (18-1)	5	T	—	S-T (3)	—
YPC40A36	600 (61) - 800 (61)	556.6 (18-1) - 795 (26-7)	397.5 (19) - 600 (61)	336.4 (26-7) - 556.5 (18-1)	5	T	—	S-T (3)	—
YPC40A40	600 (61) - 954 (61)	556.6 (18-1) - 795 (26-7)	600 (61) - 954 (61)	556.5 (18-1) - 795 (26-7)	9-7/8	T	—	S-T (6)	—

Blue highlighted items are industry standard and most frequently ordered.

TYPE YC-U

UNIVERSAL CRIMPIT™

ACCOMMODATES: COPPER, AAC (STR, COMPRESSED, COMPACT), ACSR AND AAAC

MATERIAL: ALUMINUM

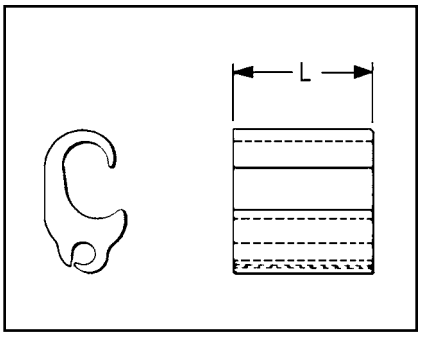

Figure "6" -shaped, wide range-taking alum-inum compression tap connector for smaller primary service taps and secondary service drops. Minimizes galvanic corrosion of conductors. Connector can be gripped in tool and slipped over line for easy installation. Installed with aluminum CRIMPIT™ dies. Pre-filled with PENETROX™ joint compound and Stripsealed to limit oxide growth and to increase the life of the connection.

Catalog Number	Run		Tap		L	Die Index	Tools, Die Set Catalog No., & (# of Crimps) Y35, Y750, Y45 †, Y46 ‡
	Aluminum & Copper	ACSR, 6201, 5005	Aluminum & Copper	ACSR, 6201, 5005			
YC4U1	4 Sol. - 4 Str.	4	6 Sol. - 1 Str.	6 - 1 Str.	1-7/8	D*	U-D (2)
YC1U1	2 Str. - 1 Str.	2					
YC28U26	1/0 Str. - 4/0 Str.	1/0 - 4/0	6 Sol. - 1/0 Str.	6 - 1/0	2-1/8	H	U-H (2)
YC33R26U	300 - 400	266.8 (6-7) - 336.4 (30-7)				R	U-R (2)

* Die Index "D" is not Die Index "D3" (CABLELOK™ & Universal CRIMPIT™ Die).
† U Die with adapter PT-6515.
‡ U Die with adapter PUADP-1.

Not recommended for copper to copper applications. Use a copper connector to increase connection life.

For faster installations use BURNDY® PATRIOT® family of battery tools.

TYPES YPC-A-U, YPC-R-U

CRIMPIT™

STREET LIGHTING TAP

ACCOMMODATES: COPPER, AAC (STR, COMPRESSED, COMPACT), ACSR AND AAAC

MATERIAL: ALUMINUM

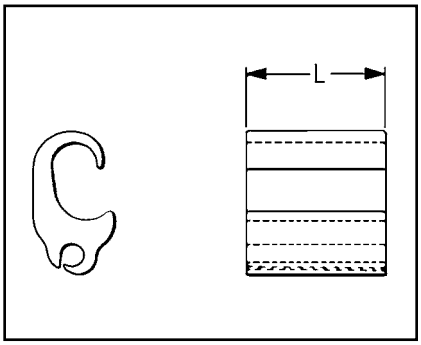

Compact compression connector designed to tap small lighting wires from secondaries. Figure "6" -shape separates run and tap, and minimizes galvanic corrosion. Connector can be gripped in tool and slipped over line for easier installation. Pre-filled with PENETROX™ joint compound and Stripsealed to limit oxide growth and to increase the life of the connection.

* Multiple crimp die set, makes more than one crimp per tool compression. Figure indicates number of compressions.
Not recommended for copper to copper applications. Use a copper connector to increase connection life.
For faster installations use BURNDY® PATRIOT® family of battery tools.

Catalog Number	Run				Tap	L	Die Index	Tools, Die Set Catalog Number, & (# of Crimps)		
	ACSR	Compressed ACSR	Aluminum & Copper	Compressed Aluminum	Aluminum & Copper			MD7, MD6	Y35, Y750, Y45 †, Y46 ‡	OUR840
YPC2A8U	6 - 4	6 - 2	4 - 2 Sol. 6 - 2 Str.	4 - 2	14 Sol. - 8 Str.	5/8	BG or 5/8	BG (1) W-BG (1)*	U-BG (1)	XBG
YPC26R8U	2 - 3/0	1 - 3/0	1 - 3/0	1/0 - 3/0	14 Sol. - 8 Str.	3/4	O	W-O (2)	U-O (1)	W-O

Blue highlighted items are industry standard and most frequently ordered.

TYPE CC

CRIMPIT™ COVER

For All O, D and N Die Tap Connectors

High density polyethylene cover accommodates most industry connectors in the O, D and N range. Four sizes cover the full #6-600 kcmil conductor range. One piece design. No extra hardware needed. Simply slip over connector and snap shut. Supplied in Black.

Catalog Number	Maximum Connector Length	Connector Series Accommodated
CCO	2-1/2	O Die
CCD	2-3/4	D Die
CCN	2-1/8	Short N Die
CCNL	5-3/16	Long N Die and YP28U26

3 Simple Selection Steps for BURNDY® HYCRIMP™ and LOKTAP™ Compression Tap Connectors:

1. Follow down from the smaller wire.
2. Go across from the larger wire.
3. Intersection of the two shows the proper connector.

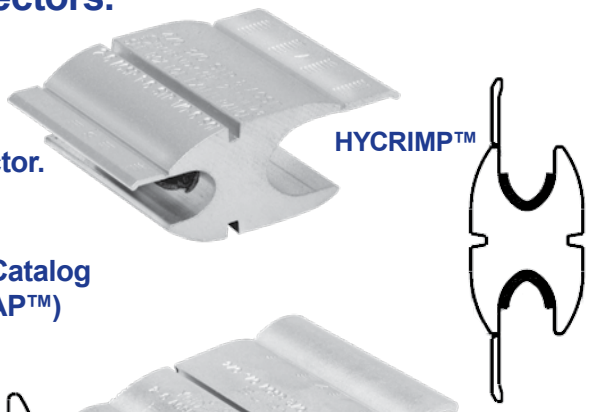

Example:

#2 ACSR to #1/0 Stranded would fall in Zone 2; Catalog Number: YHO150 (HYCRIMP™) or YHO2 (LOKTAP™)

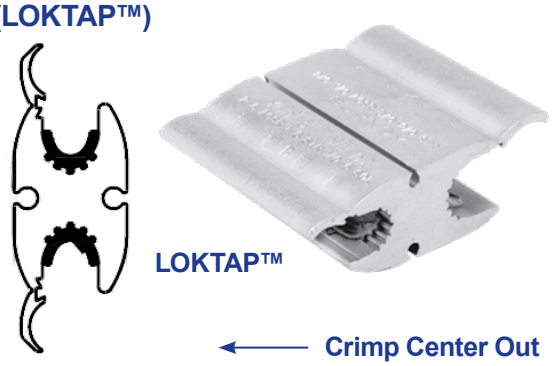

NOTE:
The **PATMD68LI** (Lithium-Ion battery), **PATMD6814V** (Nickel-Metal Hydride battery) or the **MD6-8** hand-operated tool all feature permanent "O" and "D3" die grooves to crimp all connectors on this page!

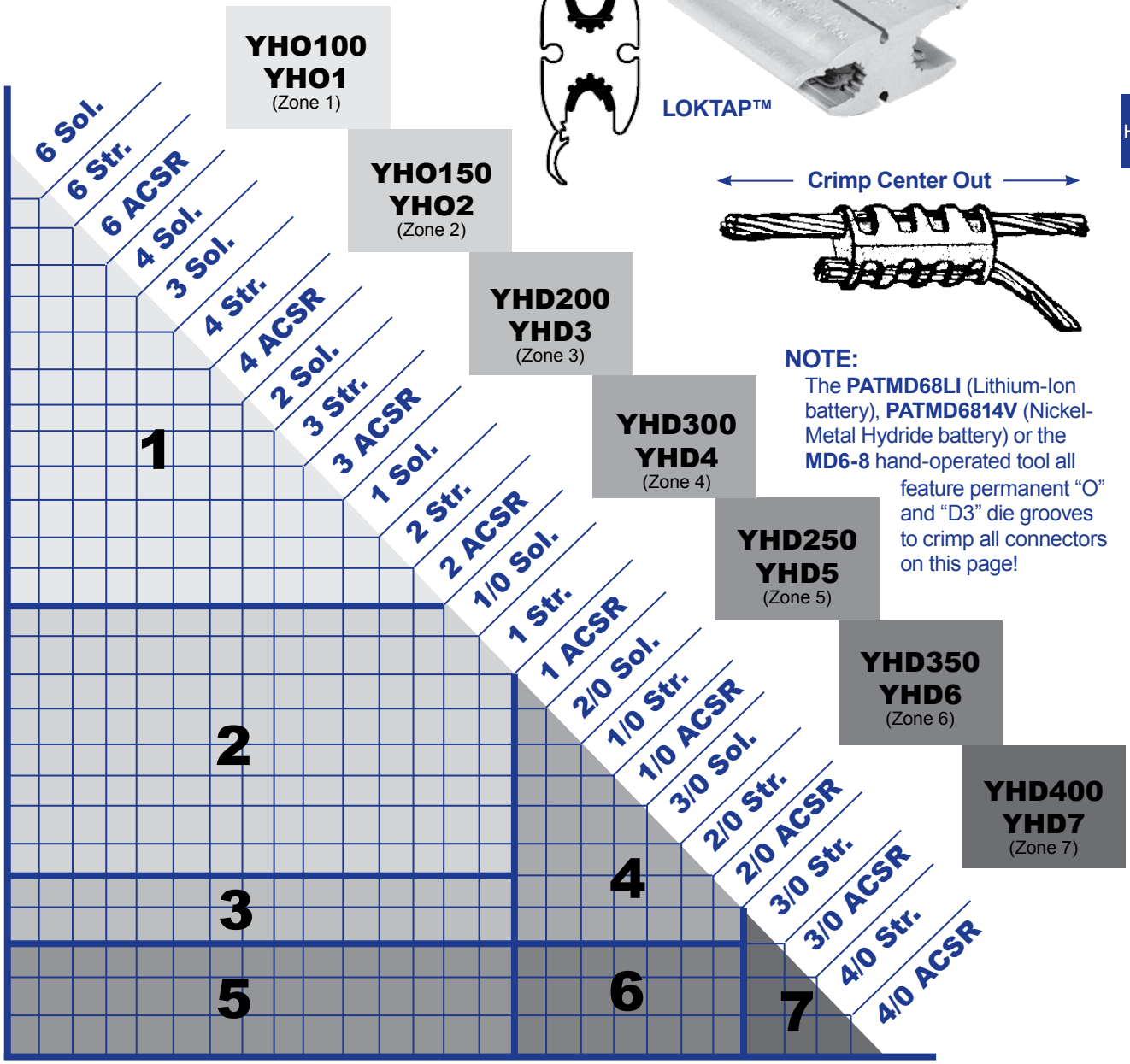

Blue highlighted items are industry standard and most frequently ordered.

TYPES YHO & YHD

HYCRIMP™

Accommodates: Aluminum (STR,Compressed, Compact) Copper, ACSR, AAAC and Steel

Material: Aluminum

Wide range, universal and reversible figure H shaped aluminum connector. Conductors are separated by the shape of the connector. Bendable tabs secure both run and tap conductors freeing the lineman's hands to work with the installation tool. Massive aluminum design minimizes corrosion due to galvanic corrosion. Prefilled with PENETROX™ joint compound and strip sealed to limit oxid growth and increase the life of the connection. Individually packaged and conductor ranges and tooling clearly printed on connector and package.

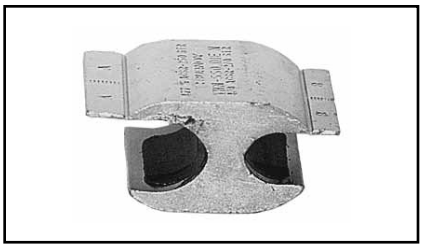

RUS Accepted

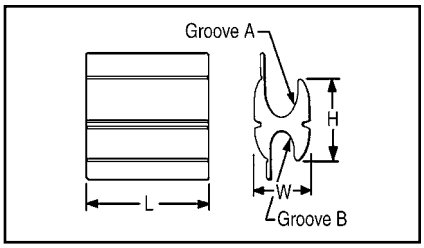

Handtool or Hydraulic 7 Connector Program

Catalog Number	① Code No.	Conductors (See Below for Compact Conductors)								Dimensions			Installation Data	
		Groove A (Run)				Groove B (Tap)							Tool, Die Set Cat. No. & (# Crimps)	
		Wire Diameter Range	Sol.	Str.	ACSR	Wire Diameter Range	Sol.	Str.	ACSR	H	L	W	MD78 MD68	Y35, Y750, Y45†, Y46‡
YHO-100	1	0.162 - 0.332	#6 - #1	#6 - #1	#6 (6/1) - #2 (7/1)	0.162 - 0.332	#6 - #1	#6 - #1	6 (6/1) - 2 (7/1)	1.12	1.25	0.70	② (4)	U-O (2)
YHO-150	2	0.260 - 0.419	#1 - 2/0	#3 - 2/0	#3 (6/1) - 1/0 (6/1)	0.162 - 0.332	#6 - 1/0	#6 - 1/0	6 (6/1) - 2 (7/1)	1.13	1.50	0.70	② (5)	U-O (2)
YHD-200	3	0.398 - 0.470	3/0 - 4/0	2/0 - 3/0	1/0 (6/1) - 2/0 (6/1)	0.162 - 0.332	#6 - 1/0	#6 - 1/0	6 (6/1) - 2 (7/1)	1.45	1.62	0.89	② (5)	UD3 (2)
YHD-250	4	0.475 - 0.563	250 - 300	4/0	3/0 (6/1) - 4/0 (6/1)	0.162 - 0.332	#6 - 1/0	#6 - 1/0	6 (6/1) - 2 (7/1)	1.47	1.62	0.89	② (5)	UD3 (2)
YHD-300	5	0.336 - 0.470	2/0 - 4/0	3 - 3/0	#1 (6/1) - 2/0 (6/1)	0.336 - 0.447	2/0 - 3/0	2/0 - 3/0	1/0 (6/1) - 2/0 (6/1)	1.42	1.62	0.89	② (5)	UD3 (2)
YHD-350	6	0.461 - 0.563	250 - 300	3/0 - 4/0	3/0 (6/1) - 4/0 (6/1)	0.338 - 0.447	2/0 - 3/0	2/0 - 3/0	1 (6/1) - 2/0 (6/1)	1.42	2.25	0.89	② (7)	UD3 (3)
YHD-400	7	0.461 - 0.563	250 - 300	3/0 - 4/0	3/0 (6/1) - 4/0 (6/1)	0.461 - 0.563	4/0	4/0	3/0 (6/1) - 4/0 (6/1)	1.40	2.50	0.84	② (7)	UD3 (3)

Compact Conductors

Catalog Number	① Code No.	Groove A (Run)			Groove B (Tap)			Installation Data		
		Wire Diameter Range	Compact ACSR	Compact CU or AL	Wire Diameter Range	Compact ACSR	Compact CU or AL	Tool, Die Set Catalog No. & (# of Crimps) MD78 MD68	Y35, Y750, Y45†, Y46‡	Die Index
YHO-100	1	0.162 - 0.336	#6 - #3	#6 - #4 - #1	0.162 - 0.268	#6 - #3	#6 - #1	② (4)	U-O (2)	O
YHO-150	2	0.260 - 0.414	#2 - 1/0	#2 - 2/0	0.162 - 0.332	#6 - #1	#6 - #1	② (5)	U-O (2)	O
YHD-200	3	0.398 - 0.470	2/0 - 3/0	3/0	0.162 - 0.332	#6 - #1	#6 - #1	② (5)	UD3 (2)	D3
YHD-250	4	0.475 - 0.563	4/0 - 266.8	4/0 - 266	0.162 - 0.332	#6 - #1	#6 - #1	② (5)	UD3 (2)	D3
YHD-300	5	0.336 - 0.470	1/0 - 3/0	1/0 - 3/0	0.338 - 0.477	1/0 - 3/0	1/0 - 3/0	② (5)	UD3 (2)	D3
YHD-350	6	0.461 - 0.563	3/0 - 266.8	4/0 - 266	0.338 - 0.447	1- 2/0	1/0 - 3/0	② (7)	UD3 (3)	D3
YHD-400	7	0.461 - 0.563	3/0 - 266.8	4/0 - 266	0.461 - 0.563	3/0 - 266.8	4/0 - 266	② (7)	UD3 (3)	D3

Handtool or Hydraulic 4 Connector Program

Catalog Number	Conductors (See Below for Compact Conductors)								Dimensions			Installation Data	
	Groove A (Run)				Groove B (Tap)							Tool, Die Set Cat. No. & (# of Crimps)	
	Wire Dia. Range	Sol.	Str.	ACSR	Wire Dia. Range	Sol.	Str.	ACSR	H	L	W	MD78 MD68	Y35, Y750, Y45†, Y46‡
YHO-125	—	#6 - 2/0	#6 - 1/0	6 (6/1) - 1/0 (6/1)	—	#6 - 1/0	6 - 1/0	#6 (6/1) - #2 (7/1)	1.15	1.62	0.70	O	—
YHD-250	0.475 - 0.563	250 - 300	4/0	3/0 (6/1) - 4/0 (6/1)	0.162 - 0.332	#6 - 1/0	6 - 1/0	#6 (6/1) - #2 (7/1)	1.47	1.62	0.89	D3	UD3 (2)
YHD-350	0.461 - 0.563	250 - 300	3/0 - 4/0	3/0 (6/1) - 4/0 (6/1)	0.338 - 0.447	2/0 - 3/0	2/0 - 3/0	#1 (6/1) - 2/0 (6/1)	1.42	2.25	0.89	D3	UD3 (3)
YHD-400	0.461 - 0.563	250 - 300	3/0 - 4/0	3/0 (6/1) - 4/0 (6/1)	0.461 - 0.563	4/0	4/0	3/0 (6/1) - 4/0 (6/1)	1.40	2.50	0.84	D3	UD3 (3)

Compact Conductors

Catalog Number	Groove A (Run)			Groove B (Tap)			Installation Data		
	Wire Diameter Range	Compact ACSR	Compact CU or AL	Wire Diameter Range	Compact ACSR	Compact CU or AL	Tool, Die Set Catalog No. & (No. of Crimps) MD78 MD68	Y35, Y750, Y45†, Y46‡	Die Index
YHO-125	—	#6 - 2/0	—	—	#6 - #1	—	O	—	O
YHD-250	0.475 - 0.563	4/0 - 266.8	4/0 - 266	0.162 - 0.332	#6 - #1	#6 - #1	D3	UD3 (2)	D3
YHD-350	0.461 - 0.563	3/0 - 266.8	4/0 - 266	0.338 - 0.447	#1 - 2/0	1/0 - 3/0	D3	UD3 (3)	D3
YHD-400	0.461 - 0.563	3/0 - 266.8	4/0 - 266	0.461 - 0.563	3/0 - 266.8	4/0 - 266	D3	UD3 (3)	D3

† U Die with adapter PT-6515
‡ U Die with adapter PUADP
For faster installations use BURNDY® PATRIOT family of battery tools.
① See page H-27 for Seven Connector Selector Chart.
② Permanent dies in tool install all sizes.
Not recommended for copper to copper applications. Use a copper connector to increase connection life.

Blue highlighted items are industry standard and most frequently ordered.

TYPE YHN & YHR

HYCRIMP™

Accommodates: Aluminum (STR, Compressed, Compact) Copper, ACSR, AAAC and Steel

Material: Aluminum

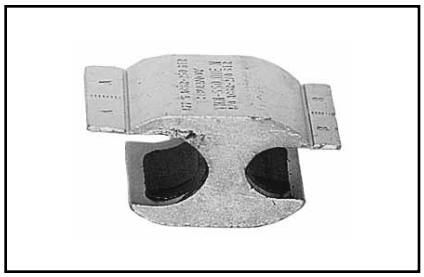

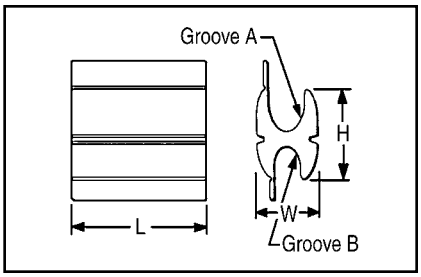

RUS Accepted

N Die Connectors*														
Catalog Number	Conductors (See Below for Compact Conductors)							Dimensions			Installation Data		
	Groove A (Run)			Groove B (Tap)							Tool, Die Set Catalog No. & (# of Crimps)		
	Wire Diameter Range	Str.	ACSR	Wire Diameter Range	Sol.	Str.	ACSR	H	L	W	Y35, Y750	Y45	Y46
YHN-450	0.52 - 0.75	4/0 - 400	4/0 (6/1) - 397.5 (18/1)	0.52 - 0.75	336 - 477	4/0 - 400	266.8 (26/7) - 477	1.86	3.50	1.25	U-N (3)	S-N (3)	P-N (3)
YHN-500	0.52 - 0.81	4/0 - 500	4/0 (6/1) - 477.0 (18/1)	0.16 - 0.45	#6 - 3/0	#6 - 2/0	#6 (6/1) - 2/0 (6/1)	1.96	1.62	1.28	U-N (2)	S-N (2)	P-N (2)
YHN-525	0.52 - 0.81	4/0 - 500	4/0 (6/1) - 477.0 (18/1)	0.52 - 0.81	-	4/0 -500	266.8 (26/7) - 556.5	1.82	4.50	1.23	U-N (3)	S-N (3)	P-N (3)
YHN-550	0.57 - 0.81	250 - 500	266.8 (18/1) - 477.0 (18/1)	0.41 - 0.50	3/0 - 300	2/0 - 4/0	2/0 (6/1) - 266.8	1.90	2.00	1.28	U-N (2)	S-N (2)	P-N (2)
YHN-600	0.57 - 0.81	250 - 500	266.8 (18/1) - 477.0 (18/1)	0.57 - 0.68	336 - 400	266 - 336.4	300.0 (26/7) - 397.5	2.00	3.50	1.28	U-N (3)	S-N (3)	P-N (3)

Compact Conductors							Installation Data			
Catalog Number	Groove A (Run)			Groove B (Tap)			Die Index	Tool, Die Set Catalog No. & (# of Crimps)		
	Wire Diameter Range	Compressed ACSR	Compact CU or AL	Wire Diameter Range	Compressed ACSR	Compact CU or AL		Y35, Y750	Y45	Y46
YHN-450	0.52 - 0.75	266.8 - 477	250 - 500	0.52 - 0.75	266.8 - 336.4	250 - 500	N	U-N (3)	S-N (3)	P-N (3)
YHN-500	0.52 - 0.81	266.8 - 556.5	250 - 556	0.16 - 0.45	266.8 - 336.4	#6 - 3/0	N	U-N (2)	S-N (2)	P-N (2)
YHN-525	0.52 - 0.81	266.8 - 556.5	250 - 556	0.52 - 0.81	266.8 - 336.4	250 - 556	N	U-N (3)	S-N (3)	P-N (3)
YHN-550	0.57 - 0.81	300 - 556.5	300 - 556	0.41 - 0.56	2/0 - 266.8	3/0 - 266.8	N	U-N (2)	S-N (2)	P-N (2)
YHN-600**	0.57 - 0.81	300 - 556.5	300 - 556	0.57 - 0.68	336.4	300 - 397.5	N	U-N (3)	S-N (3)	P-N (3)

R Die Connectors*												
Catalog Number	Conductors (See Below for Compact Conductors)							Dimensions			Tool, Die Set Catalog No. & (# of Crimps)	
	Groove A (Run)			Groove B (Tap)								
	Wire Diameter Range	Str.	ACSR	Wire Diameter Range	Sol.	Str.	ACSR	H	L	W	Y45	Y46
YHR-700	.666 - .893	336 - 600	300 - 556 (18/1)	.398 - .684	3/0 - 350	2/0 - 350	1/0 - 336.4 (18/1)	3.04	3.50	1.74	S-KR (3)	P-KR (3)
YHR-750	.666 - .893	336 - 600	300 - 556 (18/1)	.666 - .893	N/A	350 - 600	300 - 556 (18/1)	3.04	4.62	1.74	S-KR (4)	P-KR (4)
YHR-800	.879 - 1.108	600 - 900	556.5 (18/1) - 795 (26/7)	.398 - .684	3/0 - 350	2/0 - 350	1/0 - 336.4 (18/1)	3.05	3.50	1.74	S-KR (3)	P-KR (3)
YHR-850	.879 - 1.108	600 - 900	556.5 (18/1) - 795 (26/7)	.666 - .893	N/A	350 - 600	300 - 556 (18/1)	3.04	4.62	1.74	S-KR (4)	P-KR (4)
YHR-900	.879 - 1.108	600 - 900	556.5 (18/1) - 795 (26/7)	.879 - 1.108	N/A	600 - 900	556.5 (18/1) - 795 (26/7)	2.97	4.62	1.74	S-KR (4)	P-KR (4)
YHR-950	.666 - 1.165	336 - 1000	556.5 (18/1) - 954 (45/7)	.666 - 1.165	N/A	336 - 1000	336.4 (18/1) - 954 (45/7)	3.14	6.00	1.66	S-KR (5)	P-KR (5)

Compact Conductors							Installation Data		
Catalog Number	Groove A (Run)			Groove B (Run)			Die Index	Tool, Die Set Catalog No. & (# of Crimps)	
	Wire Diameter Range	Comp. ACSR	Compact CU or AL	Wire Diameter Range	Comp. ACSR	Compact CU or AL		Y45	Y46
YHR-700	.666 - .893	397 - 636	477 - 636	.398 - .684	2/0 - 397 (18/1)	3/0 - 397.5	KR	S-KR (3)	P-KR (3)
YHR-750	.666 - .893	397 - 636	477 - 636	.666 - .893	397 - 636	477 - 636	KR	S-KR (4)	P-KR (4)
YHR-800	.879 - 1.108	795 - 954	795 - 954	.398 - .684	2/0 - 397 (18/1)	3/0 - 397.5	KR	S-KR (3)	P-KR (3)
YHR-850	.879 - 1.108	795 - 954	795 - 954	.666 - .893	397 - 636	477 - 636	KR	S-KR (4)	P-KR (4)
YHR-900	.879 - 1.108	795 - 954	795 - 954	.879 - 1.108	795 - 954	795 - 954	KR	S-KR (4)	P-KR (4)
YHR-950	.666 - 1.165	-	-	.666 - 1.165	N/A	-	KR	S-KR (5)	P-KR (5)

* HYCRIMP™ connectors can be installed with competitive R dies.
** Die Index S-T and S-Z may also be used on sizes 700 - 900 only. S-KR required for 950 and S-Z.
For faster installations use BURNDY® PATRIOT® family of battery tools.
Not recommended for copper to copper applications. Use a copper connector to increase connection life.

Blue highlighted items are industry standard and most frequently ordered.

LOKTAP™

LOKTAP™ compression connectors are high quality, range-taking devices which accommodate combinations of aluminum to copper, and aluminum to aluminum conductors. BURNDY seven connector program accommodates a conductor range from #6 Sol. to 4/0 ACSR. In addition, LOKTAP™ products feature a "C" groove on both sides of the connector for use in street lighting applications from #14 Sol. to #10 Sol. LOKTAP™ connectors are designed to be installed with BURNDY mechanical or hydraulic tools and matching O and D3 die set.

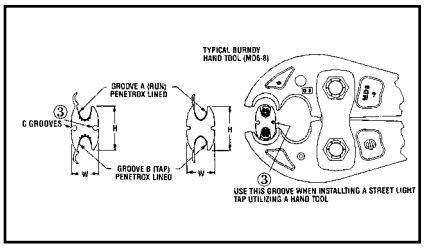

Handtool or Hydraulic 7 Connector Program ①

Catalog Number	① Code No.	Conductors (See Below for Compact Conductors)								Dimensions			Installation Data	
		Groove A (Run)				Groove B (Tap)							Tool, Die Set Catalog No. & (# of Crimps)	
		Wire Diameter Range	Sol.	Str.	ACSR	Wire Diameter Range	Sol.	Str.	ACSR	H	L	W	② MD7, MD6	Y35, Y750, Y45†, Y46‡
YHO-1	1	0.162 - 0.332	#6 - #1	#6 - #1	#6 - #2	0.162 - 0.332	#6 - #2	#6 - #2	#6 - #2	1.11	1.25	0.67	(4)	U-O (2)
YHO-2	2	0.260 - 0.419	#1 - 2/0	3 - 2/0	#3 - 1/0	0.162 - 0.332	#6 - #2	#6 - #2	#6 - #2	1.12	1.50	0.64	(5)	U-O (2)
YHD-3	3	0.398 - 0.470	3/0 - 4/0	2/0 - 3/0	1/0 - 2/0	0.162 - 0.332	#6 - #2	#6 - #2	#6 - #2	1.47	1.88	0.76	(5)	UD3 (2)
YHD-4	4	0.336 - 0.470	2/0 - 4/0	1 - 3/0	#1 - 2/0	0.336 - 0.477	#1 - 2/0	#1 - 2/0	#1 - 2/0	1.42	1.88	0.83	(5)	UD3 (2)
YHD-5	5	0.475 - 0.563	250 - 300	4/0	3/0 - 4/0	0.162 - 0.332	#6 - #2	#6 - #2	#6 - #2	1.47	1.88	0.87	(5)	UD3 (2)
YHD-6	6	0.461 - 0.563	250 - 300	3/0 - 4/0	3/0 - 4/0	0.336 - 0.447	#1 - 2/0	#1 - 2/0	#1 - 2/0	1.42	2.25	0.83	(6)	UD3 (3)
YHD-7	7	0.461 - 0.563	250 - 300	250 - 300	3/0 - 4/0	0.461 - 0.563	3/0 - 4/0	3/0 - 4/0	3/0 - 4/0	1.40	2.52	0.84	(7)	UD3 (3)
YHO-10**	—	0.232 - 0.419**	#2 - #1**	#4 - 2/0**	#4 - 1/0	0.232 - 0.419**	#4 - 1/0**	#4 - 1/0**	#4 - 1/0	1.18	1.50	0.68	(4)	U-O (2)

Catalog Number	① Code No.	Compact Conductors						Installation Data		
		Groove A (Run)			Groove B (Tap)			Tool, Die Set Catalog No. & (# of Crimps)		Die Index
		Wire Diameter Range	Compact ACSR	Compact CU or AL	Wire Diameter Range	Compact ACSR	Compact CU or AL	② MD7, MD6	Y35, Y750,Y45†, Y46‡	
YHO-1	1	0.162 - 0.332	#6 - 1	#6 - #1	0.162 - 0.332	#6 - #1	#6 - #1	(4)	U-O (2)	O
YHO-2	2	0.260 - 0.419	#2 - 1/0	#2 - 2/0	0.162 - 0.332	#6 - #1	#6 - #1	(5)	U-O (2)	O
YHD-3	3	0.398 - 0.470	2/0 - 3/0	3/0	0.162 - 0.332	#6 - #1	#6 - #1	(5)	UD3 (2)	D3
YHD-4	4	0.336 - 0.470	1/0 - 3/0	1/0 - 3/0	0.338 - 0.447	1/0 - 2/0	1/0 - 3/0	(5)	UD3 (2)	D3
YHD-5	5	0.475 - 0.563	4/0 - 266	4/0 - 256	0.162 - 0.332	#6 - #1	#6 - #1	(5)	UD3 (2)	D3
YHD-6	6	0.461 - 0.563	3/0 - 266.8	4/0 - 266	0.338 - 0.447	1/0 - 2/0	1/0 - 3/0	(6)	UD3 (3)	D3
YHD-7	7	0.461 - 0.563	3/0 - 266.8	4/0 - 266	0.461 - 0.563	3/0 - 266.8	4/0 - 266	(7)	UD3 (3)	D3
YHO-10**	—	0.232 - 0.419**	#4 - 2/0	#2 - 2/0**	0.232 - 0.419**	#4 - 2/0	#2 - 2/0**	(4)	U-O (2)	O

Handtool or Hydraulic 4 Connector Program

Catalog Number	Conductors (See Below for Compact Conductors)								Dimensions			Installation Data
	Groove A (Run)				Groove B (Tap)							Tool, Die Set Catalog No. & (# of Crimps)
	Wire Dia. Range	Sol.	Str.	ACSR	Wire Dia. Range	Sol.	Str.	ACSR	H	L	W	Y35, Y750, Y45†, Y46‡
YHO125	.162 - .398	#6 - 2/0	#6 - 1/0	#6 - 1/0	.162 - .332	#6 - 1/0	#6 - #1, 19 Str.	#6 - #2	1.15	1.62	.70	U-O (2)
YHD-5	0.475 - 0.563	250 - 300	4/0	3/0 (6/1) - 4/0 (6/1)	0.162 - 0.332	#6 - 2	#6 - 2	#6 - #2	1.47	1.88	0.87	UD3 (2)
YHD-6	0.461 - 0.563	250 - 300	3/0 - 4/0	3/0 (6/1) - 4/0 (6/1)	0.336 - 0.447	#1 - 2/0	#1 - 2/0	#1 - 2/0	1.42	2.25	0.83	UD3 (3)
YHD-7	0.461 - 0.563	250 - 300	250 - 300	3/0 (6/1) - 4/0 (6/1)	0.461 - 0.563	3/0 - 4/0	3/0 - 4/0	3/0 - 4/0	1.40	2.52	0.84	UD3 (3)

Catalog Number	Compact Conductors						Installation Data	
	Groove A (Run)			Groove B (Tap)			Tool, Die Set No. & (# of Crimps)	Die Index
	Wire Dia. Range	Compact ACSR	Compact CU or AL	Wire Dia. Range	Compact ACSR	Compact CU or AL	Y35, Y750, Y45†, Y46‡	
YHO125	.162 - .398	#6 - 1/0	#2 - 2/0	.126 - .332	#6 - #1	#6 - #1	U-O (2)	O
YHD-5	0.475 - 0.563	4/0 - 266	4/0 - 256	.162 - 0.332	#6 - #1	#6 - #1	UD3 (2)	D3
YHD-6	0.461 - 0.563	3/0 - 266.8	4/0 - 266	.338 - 0.447	1/0 - 2/0	1/0 - 3/0	UD3 (3)	D3
YHD-7	0.461 - 0.563	3/0 - 266.8	4/0 - 266	.461 - 0.563	3/0 - 266.8	4/0 - 266	UD3 (3)	D3

① See page H-27 for Seven Connector Selector Chart.
② PERMANENT DIES IN TOOL INSTALL ALL SIZES.
③ "C" grooves accommodate #10 Sol.-#14 Sol. range, .116"-.064". No "C" grooves on Cat. #YHO125. When utilizing "C" groove(s) apply PENETROX™ A13 prior to wire installation. If utilizing two (2) "C" groove taps, installation to be made with HYDRAULIC TOOL ONLY. All four (4) grooves CANNOT be utilized if using a hand tool. When hand tool is used, only one (1) "C" groove can be used; connector MUST be positioned as shown in drawing.

** YHO-10: These ranges are for aluminum only. Use only #4 Str. concentric copper tap.

† U Die with adapter PT-6515.
‡ U Die with adapter PUADP-1.

TYPE YCT

HYTEE™

ACCOMMODATES: COPPER

MATERIAL: TIN PLATED COPPER

One-piece, copper compression tap connector with U-shaped run element and tubular tap for joining hard and medium-hard drawn copper. Preformed run element simplifies installation on larger conductors. Uses same die as equivalent full-tension sleeve.

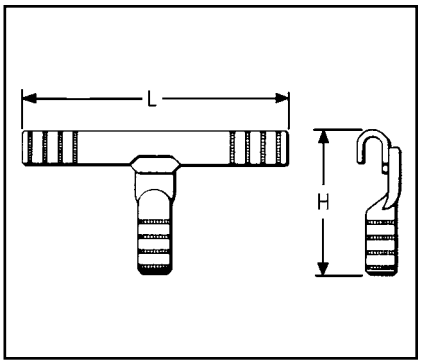

Conductors			H	L	Die Index	Run		Tap	
						Tools, Die Set Catalog Number, & (Crimps per End)		Tools, Die Set Catalog Number, & (Crimps per End)	
Catalog Number	Run	Tap				MD7, MD6	Y35, Y750, Y45 †, Y46 ‡	MD6	Y35, Y750, Y45 †, Y46 ‡
YCT2626	2/0 (7, 12, 19)	2/0 (7, 12, 19)	3.26"	5.62"	166	W166 (4)	U166/U459 (2)	W166 (6)	U-166 (3)
YCT2828	4/0 (7, 12, 19)	4/0 (7, 12, 19)	4.00"	5.72"	168	—	U168(2)	—	U-168 (3)

† U Die with adapter PT-6515.
‡ U Die with adapter PUADP-1.

For faster installations use BURNDY® PATRIOT® family of battery tools.

TYPE YOT

HYTEE™

ACCOMMODATES: COPPER

MATERIAL: TIN PLATED COPPER

Cast copper T-tap connector with two-piece line element and tubular tap for joining hard and medium drawn copper. Design simplifies installation on large conductors. Uses same die as equivalent sleeve.

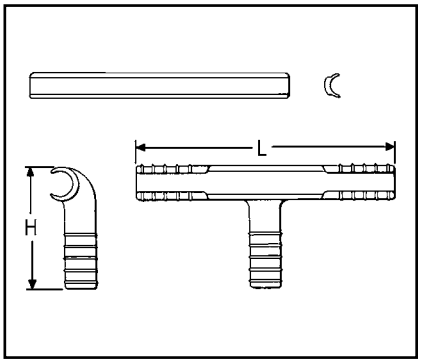

Catalog Number	Run	Tap	H	L	Die Index	Run		Tap	
						Tools, Die Set Catalog Number, & (Crimps per End)		Tools, Die Set Catalog Number, & (Crimps per End)	
						Y35, Y750, Y45 †, Y46 ‡	Y60B	Y35, Y750, Y45 †, Y46 ‡	Y60BHU
YOT3434	500 (19, 37)	500 (19, 37)	4.82"	10.38"	210	U210 (6)	L210 (2)	U210 (6)	L210 (2)

† U Die with adapter PT-6515.
‡ U Die with adapter PUADP-1.

For faster installations use BURNDY® PATRIOT® family of battery tools.

Blue highlighted items are industry standard and most frequently ordered.

TYPE YTU-R-R

T-TAP

ACCOMMODATES: COPPER, AAC (STR, COMPRESSED, COMPACT), ACSR AND AAAC

MATERIAL: ALUMINUM

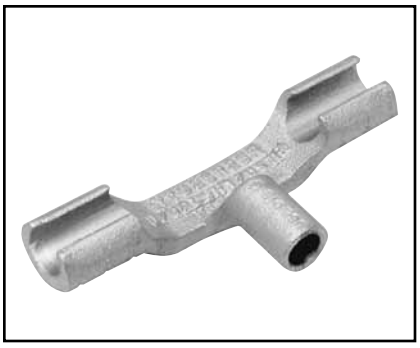

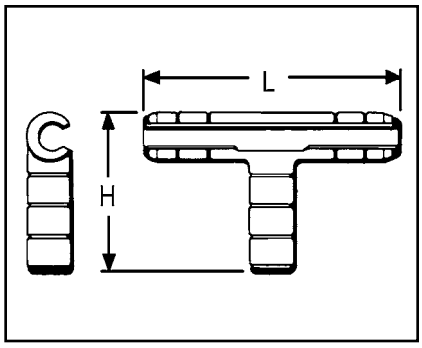

One-piece heavy-wall aluminum compression tap connector for secondary service drop and transformer tap to primary or secondary. Connector can be gripped in tool for easy installation. Pre-filled with PENETROX™ joint compound, stripsealed and capped to limit oxide growth and to increase the life of the connection.

Catalog Number	Run			Tap			H	L	Tools, Die Set Catalog Number, & (Crimps per End)					
									Run			Tap		
	ACSR, 6201, 5005	Aluminum	Copper	ACSR, 6201, 5005	Aluminum	Copper			Die Index	MD7, MD6	Y35, Y750, Y45†, Y46‡	Die Index	MD7, MD6	Y35, Y750, Y45, Y46‡
YTU25R4W	1/0 80 (8-1)	1/0 (7, 19)	1/0 (7, 12, 19)	#6	#4 (7) #4 SLD	#4 (7) #4 Sol.	2-3/8	4-7/8	C	W-C (2)	U-C (1)*	BG	BG (3) W-BG (1)*	U-BG (1)*
YTU25R25R				1/0 80 (8-1)	1/0 (7, 19)	—								
YTU26R26R	2/0	2/0 (7, 19)	2/0 (7, 12, 19)	2/0	2/0 (7, 19)	2/0 (7, 12, 19)	3-3/8	7	L	W-L (4)	U-L (2)	L	—	U-L (2)
YTU27R27R	3/0	3/0 (7, 19)	3/0 (7, 12, 19)	3/0	3/0 (7, 19)	3/0 (7, 12, 19)								
YTU28R28R	4/0	4/0 (7, 19)	4/0 (7, 12, 19)	4/0	4/0 (7, 19)	4/0 (7, 12, 19)								
YTU30R30R	266.8 (18-1. 26-7, 6-7)	266.7 (7, 19, 37) 250 (19, 37) 300 (19, 37)	250 (12, 19, 37) 300 (19, 37)	266.8 (18-1, 26-7, 6-7)	266.7 (7, 19, 37) 250 (19, 37) 300 (19, 37)	250 (12, 19, 37)	4-3/8	8-3/4	M	—	U-M (3)	M	—	U-M (3)
YTU321R2R	300 (26-7) 336.4 (18-1)	350 (19, 37) 336.4 (19, 37)	350 (19, 37)	2	2 (7 STR.)	2 (3, 7 Str.)	2-5/8	6-5/8	M			BG	BG (3) W-BG (1)*	U-BG (1)*
YTU321R26R				2/0	2/0 (7, 19)	2/0 (7, 12, 19)	3-1/2	8-5/8	M			L	—	U-L (2)
YTU321R27R				3/0	3/0 (7, 19)	3/0 (7, 12, 19)								
YTU321R28R				4/0	4/0 (7, 19)	4/0 (7, 12, 19)		8-3/5	M			M	—	U-M (3)
YTU321R321R				336.4 (18-1) 300 (26-7)	336.4 (19, 37) 350 (19, 37)	350 (19, 37)	—	—	M					U-M (2)
YTU33R26R	336.4 (30.7) (26-7) 397.5 (18.1)	397.5 (19, 37) 400 (19, 37)	400 (19, 37)	2/0	2/0 (7, 19)	2/0 (7, 12, 19)	3-1/2	8-5/8	M			L	—	U-L (2)
YTU33R28R				4/0	4/0 (7, 19)	4/0 (7, 12, 19)			M			L	—	U-L (2)
YTU33R33R			400 (19, 37)	336.4 (30-7, 26-7) 397.5 (181)	397.5 (19, 37) 400 (19, 37)	400 (19, 37)	4-3/8	8-3/4	M			M	—	U-M (3)

* Multiple crimp die set, makes more than one crimp per tool compression. Figure indicates number of compressions.
† U Die with adapter PT-6515
‡ U Die with adapter PUADP-1.

Not recommended for copper to copper applications. Use a copper connector to increase connection life. For faster installations use BURNDY® PATRIOT® family of battery tools.

Blue highlighted items are industry standard and most frequently ordered.

TYPE YTA-R-2N

DISCONNECTABLE T-TAP (WITH PAD)

ACCOMMODATES: COPPER, AAC (STR, COMPRESSED, COMPACT), ACSR AND AAAC

MATERIAL: ALUMINUM

Aluminum primary T-tap connector with slotted tap pad designed for easy disconnecting of tap conductor. Tap pad accommodates compression terminals Types YKA-R-2N and YKA-A-2N, and has positioning socket for proper alignment. On sizes larger than 336.4 ACSR, the YTA-R-2N run element has two piece interlocking key with lifting eye that simplifies hotline installations. Catalog number does not include mating terminal.

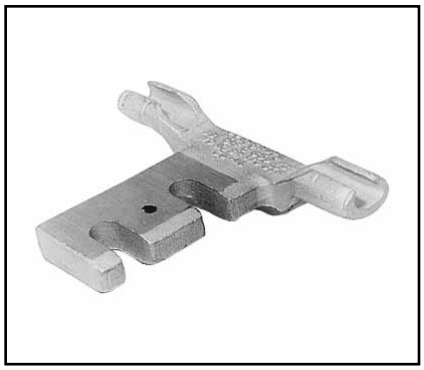

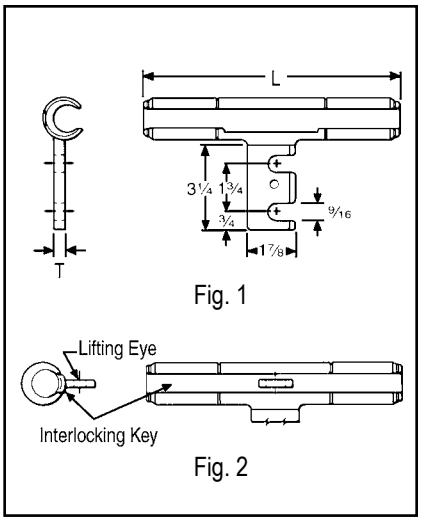

Catalog Number	ACSR, 6201, 5005	Copper	Aluminum	Fig. No.	L	T	Die Index	Tools, Die Set Catalog Number, & (# of Crimps per End)					
								MD7, MD6	Y35, Y750	Y45 †	Y46 ‡	Y48B	Y60BHU
YTA2R-2N	2	2 (3, 7) 1 (7)	2 (7) 1 (7)	1	6-1/8	3/8	BG or 243	BG (2) W-BG (1)* W243 (2)	U- BG (1)* U243 (1)	—	—	—	—
YTA25R-2N	1/0	1/0 (7, 12, 19)	1/0 (7, 19)	1		1/2	247 C 659	W-C (4) W247 (1)	U659 (1) U-C (1) U247 (1)				
YTA26R-2N	2/0	2/0 (7, 12, 19)	2/0 (7, 19)	1	7-7/8		L or 251	W-L (4)	U-L (2) U251 (3)				
YTA27R-2N	3/0	3/0 (7, 12, 19)	3/0 (7, 19)	1									
YTA28R-2N	4/0	4/0 (7, 12, 19)	4/0 (7, 19)	1									
YTA321R-2N	300 (26-7) 336.4 (18-1)	350 (19, 37)	336.4 (19, 37, 61) 350 (19, 37, 61)	1	9-1/2		M	—	U-M (3) U317 (4)				
YTA33R-2N	336.4 (26-7, 30-7) 397.5 (18-1)	400 (19, 37)	397.5 (19, 37, 61) 400 (19, 37, 61)	1									
YTA361R-2N	477 (18-1)	—	—	2	13-1/8								
YTA37R-2N	477 (24-7, 26-7, 30-7)	—	556.6 (19, 37)	2					U-M (5)				
YTA39R-2N	556.5 (24-7, 26-7)	—	636 (37) 650 (61)	2	16-1/4		608		U608 (9)			C608 (3)	L608 (3)
YTA43R-2N	605 (30-19) 605 (30-9) 636 (24-7, 26-7, 30-19) 666.6 (24-7)	—	795 (37, 61)	2	16-1/2	3/4	292 or 319		—	S929 (9) S319 (9)	P929 (9) P319 (9)	C929 (9) P319 (9)	L929 (9) P319 (9)
YTA391A-2N	—	—	795 (37, 61)	2			342			S342 (9)	P342 (9)	C342 (9)	L342 (9)

* Multiple crimp die set, makes more than one crimp per tool compression. Figure indicates number of compressions.

† U Die with adapter PT-6515.
‡ U Die with adapter PUADP-1.

For faster installations use BURNDY® PATRIOT® family of battery tools.

Blue highlighted items are industry standard and most frequently ordered.

TYPES YKA-R-2N & YKA-A-2N

DISCONNECTABLE TERMINAL (WITH FIXED HARDWARE)

ACCOMMODATES:
AAC (STR, COMPRESSED, COMPACT), COPPER, ACSR AND AAAC

MATERIAL: ALUMINUM

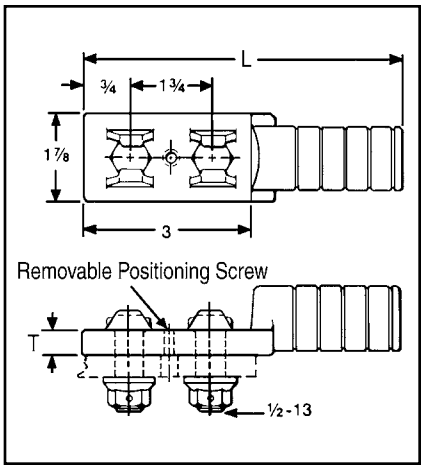

Aluminum compression terminal with fixed hardware and positioning pin for making disconnectable tap or jumper connections. Used with slotted YTA-R-2N T-tap or YSA-R-2N terminal.

Supplied with aluminum bolts and washer-face, self locking nuts. Prefilled with PENETROX™ joint compound capped, and stripsealed to limit oxide growth and to increase the life of the connection.

Catalog Number	ACSR, 6201, 5005	Copper	Aluminum	L	T	Bolt Length	Die Index	Tools, Die Set Catalog Number, & (Number of Crimps per End)					
								MD7, MD6	Y35, Y750	Y45 †	Y46 ‡	Y48B	Y60BHU
YKA2R-2N	2	1 (7) 2 (3, 7)	1 (7) 2 (7)	5-1/2	3/8	1-3/4	BG or 243	BG (8) W-BG (4)* W243 (4)	U-BG (3)* U243 (2)	—	—	—	—
YKA25R-2N	1/0	1/0 (7, 19)	1/0 (7, 19)	5-5/8			C or 659	W-C (6)	U-C (3)* U629 (2)	—	—	—	—
YKA26R-2N	2/0	2/0 (7, 19)	2/0 (7, 19)	6			L or 251	—	U-L (2) U251 (3)	—	—	—	—
YKA27R-2N	3/0 110.8 (12-7)	3/0 (7, 19)	3/0 (7, 19)										
YKA28R-2N	4/0	4/0 (7, 19)	4/0 (7, 19)										
YKA30R-2N	266.8 (18-1, 6-7, 26-7)	250 (12, 19, 37) 300 (19, 37)	250 (7, 37) 266 (19)	7-1/4			M or 317	—	U-M (3) U317 (4)	—	—	—	—
YKA321R-2N	336.4 (18-1) 300 (26-7)	350 (19, 37)	300 (37, 61) 350 (37, 61)										
YKA33R-2N	336.4 (26-7. 30-7) 397.5 (18-1)	—	397.5 (19) 400 (37)										
YKA361R-2N	397.5 (26-7, 30-7) 477 (18-1)	—	477 (19, 37) 500 (37, 61)										
YKA37R-2N	477 (24-7, 26-7, 30-7)	—	556.5 (19, 37)	7-3/8			M	—	U-M (3)	—	—	—	—
YKA34CA-2N	397.5 (26-7, 30-7) 477 (18-1)	500 (19, 37)	477 (19, 37) 500 (37, 61)	—			352 or 579	—	—	S352 (6) S579 (6)	P352 (6) P579 (6)	C352 (9) C579 (9)	L352 (9) L579 (9)
YKA391A-2N	—	—	795 (37, 61)	9-1/2	3/4	2-1/2	342	—	—	S342 (6)	P342 (6)	C342 (9)	L342 (9)

* Multiple crimp die set, makes more than one crimp per tool compression. Figure indicates number of compressions.

† U Die with adapter PT-6515.
‡ U Die with adapter PUADP-1.

For faster installations use BURNDY® PATRIOT® family of battery tools.

Blue highlighted items are industry standard and most frequently ordered.

TYPE YSA-R-2N

DISCONNECTABLE TERMINAL (WITH SLOTTED PAD)

ACCOMMODATES: AAC (STR, COMPRESSED, COMPACT), COPPER, ACSR AND AAAC

MATERIAL: ALUMINUM

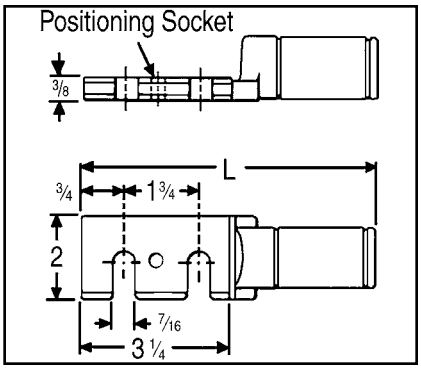

Aluminum compression terminal with slotted pad and positioning socket for making disconnectable tap or jumper connections. Used with YKA-R-2N fixed hardware terminal. Pre-filled with PENETROX™ joint compound, stripsealed and capped to limit oxide growth and to increase the life of the connection.

Catalog Number	ACSR, 6201, 5005	Copper	Aluminum	L	Die Index	Tools, Die Set Catalog Number, & (Number of Crimps)	
						MD7, MD8	Y35, Y750, Y45 †, Y46 ‡
YSA2R-2N	2	2 (3, 7) 1 (7)	2 (7) 1 (7)	6-1/4	BG or 243	BG (8) W-BG (4)* W243 (4)	U-BG (3)* U243 (2)
YSA25R-2N	1/0	1/0 (7, 19)	1/0 (7, 19)		C or 659	—	
YSA26R-2N	2/0	2/0 (7, 19)	2/0 (7, 19)	6-5/8	L or 251	—	U-L U251
YSA28R-2N	4/0	4/0 (7, 19)	4/0 (7, 19)				
YSA30R-2N	266.8 (18-1, 6-7, 26-7)	250 (12, 19, 37) 300 (19, 37)	250 (37) 266.8 (7, 19)	7-3/4			
YSA321R-2N	336.4 (18-1) 300 (26-7)	350 (19, 37)	300 (37, 61) 350 (37, 61)		M or 317	—	U-M (3) U317 (4)
YSA37R-2N	477 (24-7, 26-26-7, 30-7)	—	556.5 (19, 37)	7-7/8	M	—	U-M (3)

* Multiple crimp die set, makes more than one crimp per tool compression. Figure indicates number of compressions.

† U Die with adapter PT-6515.
‡ U Die with adapter PUADP-1.

For faster installations use BURNDY® PATRIOT® family of battery tools.

TYPE YTA-2N

DISCONNECTABLE T-TAP

ACCOMMODATES: COPPER

MATERIAL: TIN PLATTED COPPER

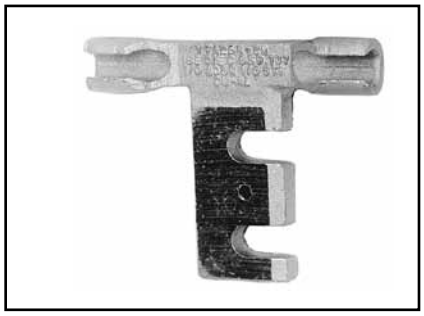

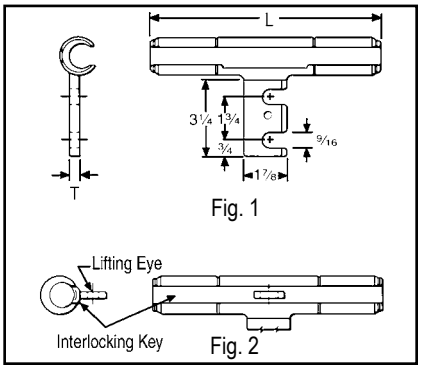

Cast copper primary t-tap connector with slotted tap pad for easy disconnecting of tap conductor. Tap pad accommodates compression terminal Type YKA-2N. On sizes larger that 4/0, the YTA-2N run element has a two-piece, interlocking key with lifting eye that simplifies hot installations. Catalog number does not include terminal or hardware.

Catalog Number	Conductor	Fig. No.	C	L	T	Die Index	Tools, Die Set Catalog Number, & (Number of Crimps)			
							MD7, MD6	Y35, Y750, Y45, Y46	Y48B	Y60BHU
YTA2C-2N	2 (7)	1	1-1/2	5-5/8	3/8	163	W163 (3) Crimps Overlap	U163 (1)*	—	—
YTA26-2N	2/0 (7, 19)			7-3/8		166	W166 (6)	U166 (3)	—	—
YTA28-2N	4/0 (7, 12, 19)			7-5/8		168	—	U168 (4)	—	—
YTA34-2N	500 (19, 37, 61)	2	2	11-7/8	1/2	210	—	U210 (6)	C210 (2)	L210 (2)

* Multiple crimp die set, makes more than one crimp per tool compression. Figure indicates number of compressions.

† U Die with adapter PT-6515.
‡ U Die with adapter PUADP-1.

For faster installations use BURNDY® PATRIOT® family of battery tools.

Blue highlighted items are industry standard and most frequently ordered.

TYPE YKA-2N

DISCONNECTABLE TERMINAL (WITH FIXED HARDWARE)

ACCOMMODATES: COPPER

MATERIAL: TIN PLATED COPPER

Tin-plated copper compression terminal with fixed hardware for making disconnectable tap or jumper connections. Used with slotted YTA-2N T-tap or YSA-R-2N terminal. Supplied with tin-plated DURIUM™ bolts and washer-face nuts.

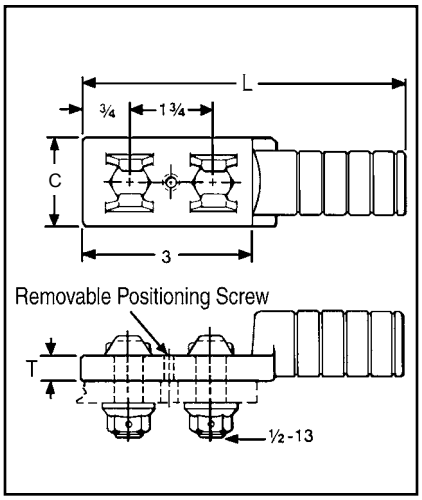

Catalog Number	Conductor	C	L	T	Die Index	Tools, Die Set Catalog Number, & (Number of Crimps)			
						MD7, MD6	Y35, Y750, Y45†, Y46‡	Y48B	Y60BHU
YKA6C-2N	6 (7)	7/8	5	3/8	163	W163 (2) Crimps Overlap	U163 (1)*	—	—
YKA2C-2N	2 (7)								
YKA26-2N	2/0 (7, 19, 37)	1	5-1/4	1/4	166	W166 (4)	U166 (3)		
YKA28-2N	4/0 (7, 12, 19, 37)	1-1/4	5-3/8	3/8	168	—	U168 (3)	C168 (1)	L168 (1)
YKA30-2N	300 (19, 37, 61)	1-1/2	5-1/2		170		U170 (5)	C170 (1)	L170 (1)
YKA34-2N	500 (19, 37 61)	1-7/8	6-1/2	1/2	210		U210 (6)	C210 (2)	L210 (2)
YKA44-2N	1000 (61)	2	7-5/8	1/2	345		—	C345 (4)	L345 (4)

* Multiple crimp die set, makes more than one crimp per tool compression. Figure indicates number of compressions.
† U Die with adapter PT-6515.
‡ U Die with adapter PUADP-1.
For faster installations use BURNDY® PATRIOT® family of battery tools.

TYPE YCB-R

STIRRUP™ HOT-LINE CLAMP ADAPTERS

ACCOMMODATES:
AAC (STR, COMPRESSED, COMPACT), ACSR AND AAAC

MATERIAL: ALUMINIUM, TIN PLATED COPPER BAIL

Permanent compression hot-line clamp adapter with aluminum run and copper bail. Accommodates any standard copper hotline clamp on bail elements. Permits hot-line tapping without arcing or chafing damage to aluminum conductor. Installed with standard tools and dies. Prefilled with PENETROX™ joint compound and stripsealed to limit oxide growth and to increase the life of the connection.

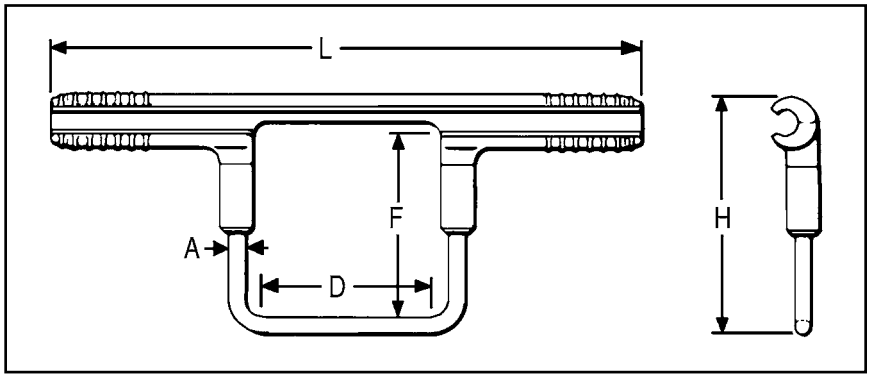

Catalog Number	Aluminum	ACSR, 6201, 5005	A	H	L	D	F	Die Index	Tools, Die Set Catalog Number, & (Crimps per End)	
									MD7, MD6	Y35, Y750, Y45 †, Y46 ‡
YCB2R	2 Str. - 6 Sol.	2-4	2 Sol.	3-3/4	9	2-1/2	2-1/2	BG	BG (6) W-BG (2)*	U-BG (2)*
YCB25R	1/0 (7, 19)	1/0 - 80 (8-1)	2 Sol.	5	9-3/4	2-1/2	3-1/2	C	W-C (4)	U-C (2)*
YCB26R	2/0 (7, 19)	2/0	1/0 Sol.	5	11-1/8	3-1/2	3-1/2	L	W-L (4)	U-L (2)
YCB27R	3/0 (7, 19)	3/0	1/0 Sol.	5	11-1/8	3-1/2	3-1/2	L	W-L (4)	U-L (2)
YCB28R	4/0 (7, 19)	4/0	1/0 Sol.	5	11-1/8	3-1/2	3-1/2	L	W-L (4)	U-L (2)
YCB321R	350 (19, 37) 336.4 (19, 37)	336.4 (18-1) 300 (26-7)	1/0 Sol.	5-3/8	12-3/4	3-1/2	3-1/2	M	—	U-M (3)
YCB33R	400 (19, 37) 397.5 (19, 37)	336.4 (26-4, 30-7) 397.5 (18-1)	1/0 Sol.	5-3/8	12-3/4	3-1/2	3-1/2	M	—	U-M (3)
YCB35R	500 (37, 61) 477 (19 , 37)	397.5 (26-7) (30-7)	1/0 Sol.	5-3/8	12-3/4	3-1/2	3-1/2	M	—	U-M (3)
YCB361R	477 (19, 37)	477 (18-1)	1/0 Sol.	5-1/4	13-1/4	3-1/2	3-1/2	317	—	U317 (3)

* Multiple crimp die set, makes more than one crimp per tool compression. Figure indicates number of compressions.

† U Die with adapter PT-6515.
‡ U Die with adapter PUADP-1.

For faster installations use BURNDY® PATRIOT® family of battery tools.

Blue highlighted items are industry standard and most frequently ordered.

TYPES YCB-U & YCB-R-U

CRIMPIT™ STIRRUP™

ACCOMMODATES:
AAC (STR, COMPRESSED), ACSR AND AAAC

MATERIAL: ALUMINUM

TENSION RATING:
ANSI C119.4 CLASS 3
(NON TENSION)

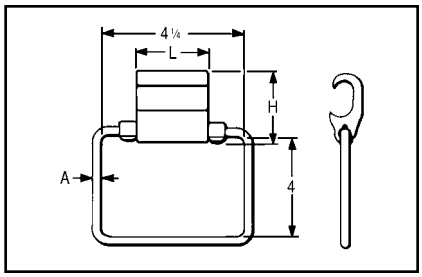

Combines Figure "6" -shaped aluminum CRIMPIT™ tap connector with tin-plated copper bail. Can be gripped in tool and slipped over line for easy installation. Five sizes take range from #4 to 600 kcmil. Prefilled with PENETROX™ joint compound and Stripsealed to limit oxide growth and to increase the life of the connection.

Catalog Number	Aluminum	ACSR, 6201, 5005	A	H	L	Die Index	Tools, Die Set Catalog Number, & (Number of Crimps)		
							Y35, Y750	Y45	Y46
YCB4U1	4 Sol. - 4 (7)	4	2 Sol.	1-1/2	1-7/8	D	U-D (2)	†	‡
YCB1U1	2 (7) - 1 (7)	2		1-5/8					
YCB28U26	1/0 (7) - 4/0 (19)	1/0 - 4/0		2	2-1/8	H	U-H (2)		
YCB33R26U	300 (37) - 400 (37)	266.8 (6-7) - 336.4 (30-7)		2-1/4		R	U-R (2)		
YCB38R26U	397.5 (19) - 600 (61)	336.4 (26-7) - 556.5 (18-1)	1/0 Sol.			N	U-N (2)	S-N (2)	P-N (2)

* Index number "D" is not "D3" Cabelok CRIMPIT™ die.

† U Die with adapter PT-6515
‡ U Die with adapter PUADP-1.

For faster installations use BURNDY® PATRIOT® family of battery tools.

TYPES J990 & J1252

HOT-LINE CLAMP BAILS

MATERIAL: TIN PLATED COPPER

Designed to make hot-line clamp adapter using HYCRIMP™, CABELOK™ CRIMPIT™ or Figure "6" -Shaped CRIMPIT™ connectors. Where hot sticks are used, the CABELOK™ CRIMPIT™ or Figure "6" -shaped CRIMPIT™ are recommended. The line can be approached with the connector and bail held in the tool. Bails are tin-plated, hard drawn copper.

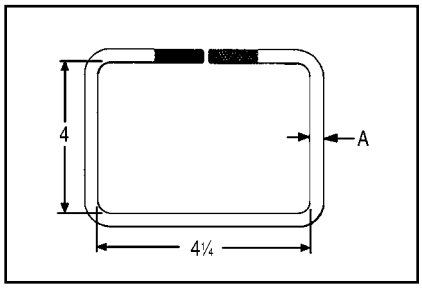

Recommended Connector & Bail Combinations						
HYCRIMP™ Cat. No.	CABELOK™ CRIMPIT™ Cat. No.	Bail	A	Run Conductors Accommodated		
				Sol. Al	Str. Al	ACSR
YHO100	YP2U3	J990	#2	6 - 2	6 - 3 (7 Str.)	6,4
YHO150	YP26AU2			1 - 2/0	3 (3 Str.) - 1/0	3 - 1/0
YHD200	YP27AU4			3/0 - 4/0	2/0 - 3/0	1/0, 2/0
YHD250	YPC28U4			—	4/0	3/0, 4/0
YHD300	YP27AU26	J1252	2/0	3/0	2/0, 3/0	2/0
YHD350	YP28U26			—	4/0	3/0, 4/0
—	YPC28U26	J990	#2		1/0 (7) - 4/0	1/0 - 4/0
		J1252	2/0			
YHN500	YPC33R26U	J990	#2		250 (37)	266.8 (18-1)
		J1252	2/0		400 (37)	397.5 (18-1)

*** For additional run & tap conductors see specific connector catalog page.**

Blue highlighted items are industry standard and most frequently ordered.

TYPES YHO-J,YHD-J, YHN-J

HYCRIMP™ STIRRUP™

ACCOMMODATES:
AAC (STR, COMPRESSED, COMPACT) AND ACSR

MATERIAL: ALUMINUM, TIN PLATED COPPER BAIL

Utilizing H-Framed Aluminum Tap Connectors with tin-plated copper bail. Bendable tabs secure run and bail freeing the lineman's hands to work with the installation tool conductor grooves. Prefilled with PENETROX™ joint compound and stripsealed to limit oxide growth and to increase the life of the connection.

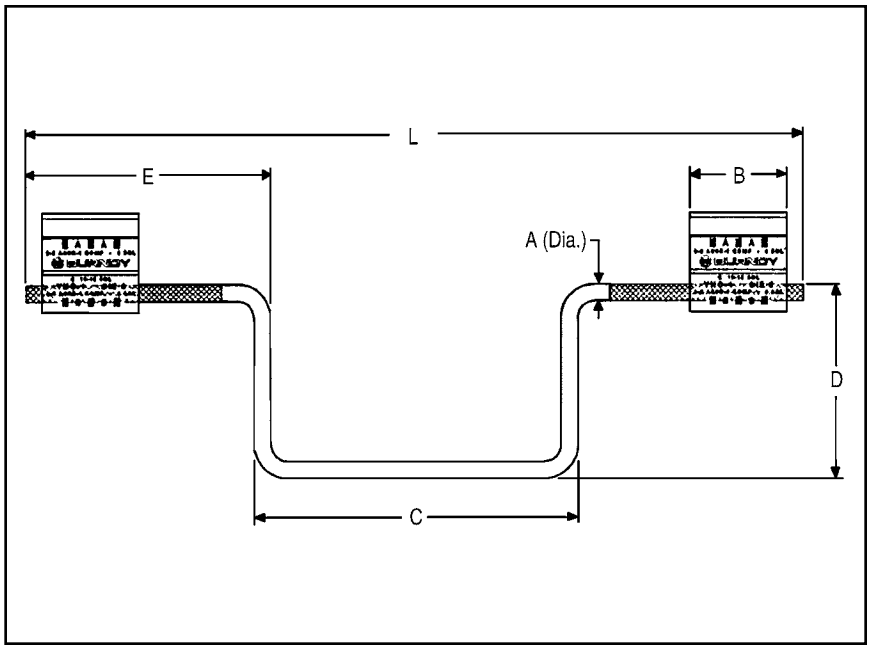

Catalog Number	Run Conductor Accommodates			A	B	C	D	E	L	Die Index	Tools, Die Set Catalog Number, & (# of Crimps)	
	Sol. Al	Str. Al	ACSR								① MD7-8 MD6-8	Y35, Y750, Y45 †, Y46 ‡
YHO100J1444	6-1	6-1 (7 Str.)	6 - 2	2 Sol. (0.258)	1.50	5.00	3.00	3.75	12.00	O	(4)	U-O (2)
YHO150J1444	1 - 2/0	3 - 2/0	3 - 1/0		1.75	5.00	3.00	3.75	12.00	O	(5)	U-O (2)
YHD200J1444	3/0 - 4/0	2/0 - 3/0	1/0 - 2/0		1.88	5.00	3.00	3.75	12.00	D3	(5)	UD-3 (2)
YHD250J1444	250 - 300	4/0	3/0 - 4/0		1.88	5.00	3.00	3.75	12.00	D3	(5)	UD-3 (2)
YHD300J1496	2/0 - 4/0	#1 -3/0	#1 - 2/0	2/0 Sol. (0.365)	1.88	5.00	4.75	5.62	15.50	D3	(5)	UD-3 (2)
YHD350J1496	250 - 300	3/0 - 4/0	3/0 - 4/0		2.50	5.00	4.75	5.62	15.50	D3	(7)	UD-3 (2)
YHN500J1496	—	4/0 - 500	4/0 - 477 (18/1)		2.00	5.00	4.75	5.62	15.50	N	—	U-N (2)

① Permanent dies in tool install all sizes.
† U Die with adapter PT-6515
‡ U Die with adapter PUADP-1.

For faster installations use BURNDY® PATRIOT® family of battery tools.

Blue highlighted items are industry standard and most frequently ordered.

TRANSFORMER AND EQUIPMENT TAP CONNECTORS

Transformer and equipment tap connectors are specifically designed to provide single or multi-tap connections from secondary transformer outlets, disconnects, circuit breaker panels, and other equipment pads or bar.

TYPE E-C-G

TRANSFORMER TAP ADAPTER

ACCOMMODATES: COPPER

MATERIAL: COPPER

TENSION RATING:
ANSI C119.4 CLASS 3
(NON TENSION)

Multi-tap, range-taking cast copper alloy connector designed to take 2, 3 or 4 conductors from a single secondary transformer outlet.

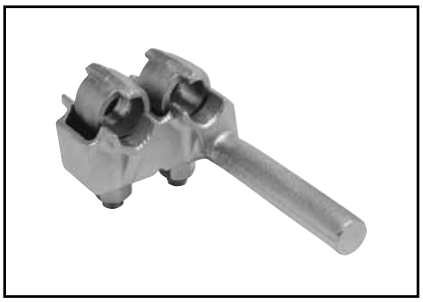

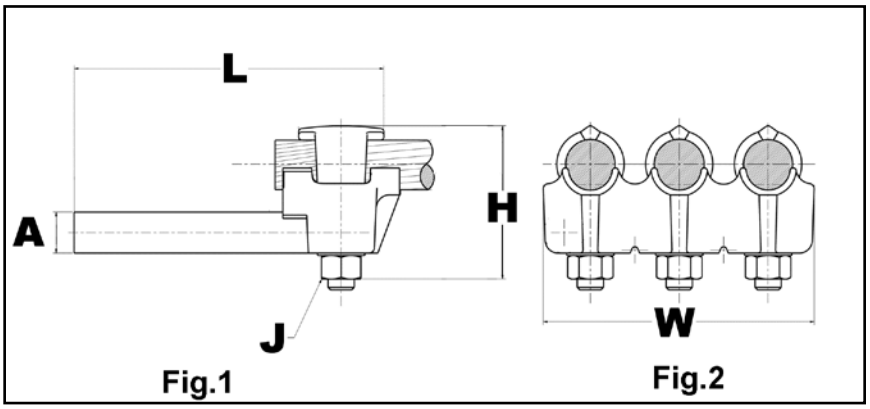

Catalog Number	Number of Conductors	Conductor Size	A dia.	D	H	J	L	W
E2C34G1	2	1/0 -500 kcmil	0.78	3-3/4	3-7/8	1/2 - 13	6 - 1/4	3-1/2
E3C34G1	3							5-1/4
E4C34G1	4							6-7/8

TYPES KC22J12T13, EQC632C

TRANSFORMER GROUND CONNECTORS

ACCOMMODATES: COPPER

MATERIAL: COPPER

Fits all standard EEI-NEMA distribution transformers as tank grounding terminal.

Type EQC632C

TYPE KC	Ranges
KC22J12T13	8 Sol. - 2 Sol.
KC26	2 Sol. - 2/0 Str.
KC34J12T13	3/0 - 500 Str.
EQC632C	8 Sol. - 2 Str.

Both, one-wrench installation.

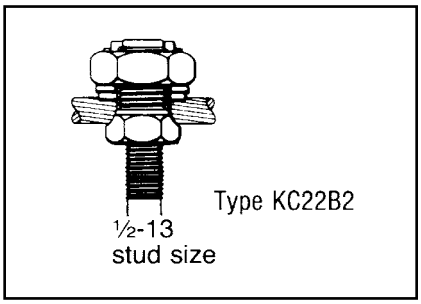

TYPE YA-2LH

HYSEALUG™

ACCOMMODATES: COPPER

MATERIAL: COPPER

Tin-plated, pure copper 2-hole NEMA compression terminal with shrouded barrel for terminating insulated copper conductor to transformers and other equipment. Shroud prevents seepage of water or moisture into conductor strands and minimizes taping.

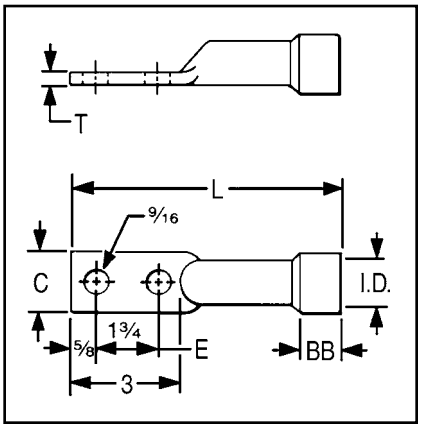

Catalog Number	Conductor	BB	Shroud Inside Diameter	C	L	T	Tools, Die Set Catalog Number, & (Number of Crimps)	
							MD7, MD6	Y35, Y750, Y45 †, Y46 ‡
YAB4C-2LH72	4 Str.	5/8	0.57	3/4	6-1/4	1/8	W161 (2)	U4CRT (2)
YAB2C-2LH74	2 Str.	3/4	0.58		6-1/2		W162 (4)	U2CRT (2)
YAB2C2LH75			0.91					
YAB25-2LH70	1/0 Str.	1	0.69	7/8	6-3/4	3/8	W163 (4)	U25RT (2)
YAB25-2LH71			0.98					
YA26-2LH89	2/0 Str.		1.04		6-1/4	—	W241 (2)	U26RT (2)
YA28-2LH114	4/0 Str.		0.86	1	6-5/8	1/8	W-BG or W243 (2)	U28RT (2)
YA28-2LH115			1.24					
YA29-2LH91	250		1.25	1-1/8			W166 (4)	U29RT (2)
YA30-2LH85	300	1-1/4	0.92	1-1/4	7		—	U30RT (2)
YA31-2LH90	350		1.40	1-3/8	7-5/8		W-0 (5)	U31RT (2)
YA34-2LH110	500	1-1/2	1.14	1-1/2	7-3/4	1/4	—	U34RT (2)
YA34-2LH111			1.88				—	

† U Die with adapter PT-6515
‡ U Die with adapter PUADP-1.

Blue highlighted items are industry standard and most frequently ordered.

TYPE YE-LH

HYSEALPLUG™

ACCOMMODATES: COPPER

MATERIAL: COPPER

TENSION RATING:
ANSI C119.4 CLASS 3
(NON TENSION)

Oil and water-tight terminal with shrouded, tin-plated, copper barrel and brazed plug. Recommended for terminating insulated copper conductor at cutout, transformer and arrestor; or for joining insulated copper riser to overhead conductor. Shroud prevents seepage of water or moisture into conductor strands and minimizes taping. To obtain a tight fit on some insulations in the shroud it may be necessary to either "pencil" the insulation down, or build it up with tape.

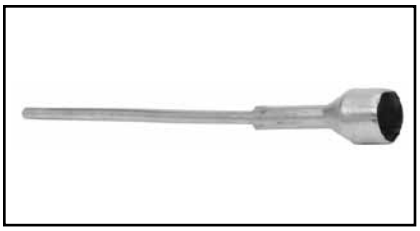

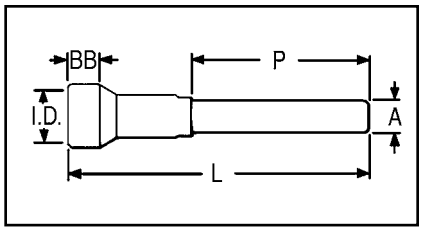

Catalog Number	Conductor	BB	Shroud Inside Dia.	A Dia.	L	P	Tools, Die Set Catalog Number, & (# of Crimps)	
							MD6, MD7	Y35, Y750, Y45 †, Y46 ‡
YE2C-LH128	2 Str.	3/4	0.58	2 Sol.	9	6	W162 (4)	U2CRT (2)
YE2C-LH129			0.91					
YE25-LH97	1/0 Str.	1	0.98	1/0 Sol.	11-1/8	8	W163 (4)	U25RT (2)
YE26-LH88	2/0 Str.		0.73	2/0 Sol.	11-3/8		W241 (2)	U26RT (2)
YE26-LH89			1.04				W241 (2)	
YE28-LH128	4/0 Str.		1.24	4/0 Sol.	11-1/2		W-BG or W243 (2)	U28RT (2)
YE31-LH96	350	1-1/4	1.03		12-1/4		W-O (5)	U31RT (2)
YE34-LH119	500	1-1/2	1.14		13-1/4		—	U34RT (2)
YE34-LH120			1.88					

† U Die with adapter PT-6515.
‡ U Die with adapter PUADP-1.

For faster installations use BURNDY® PATRIOT® family of battery tools.

TYPES YE-R,YE-W

HYPLUG™

ACCOMMODATES: AAC (STR, COMPRESSED), ACSR AND AAAC

MATERIAL: ALUMINUM

TENSION RATING:
ANSI C119.4 CLASS 3
(NON TENSION)

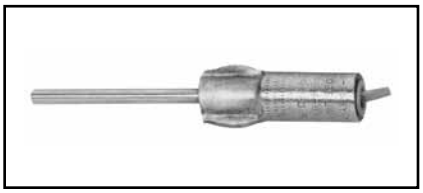

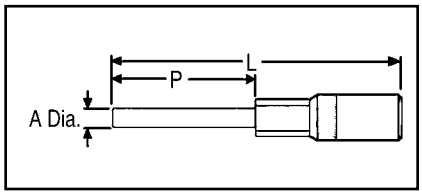

In 1989 BURNDY® began shipping an improved pin type connector. A proprietary coating system was developed through intense research efforts which vastly prolongs the life of this type of connection. To help identify the new product, a hex shaped crimp is now used on the pin interface crimp and overhead color coded end caps are utilized.

Aluminum HYPLUG™ with tin-plated copper plug for terminating aluminum or ACSR cable at cut-out, transformer and arrestor. Plug may be bent to desired angle for easier insertion. Three die sets accommodate 4 Str.-500 kcmil. Terminals are pre-filled with PENETROX™ A-13 joint compound and sealed with color coded end caps.

Catalog Number	Conductor		A Dia.	L	P	Color Code	Die Index	Tools, Die Set Catalog Number, & (# of Crimps)			
	Aluminum	ACSR						MD7, MD6	Y35, Y750, Y45 †, Y46 ‡	Y48BH	Y60BH
YE6R-25	5, 6 Str.	6	4 Sol.	4-5/8	2-1/2	Blue	K-5/8-1, 243, BG, 8A	BG WBG W243	U-BG U243 UK5/8-1T	C243	L243
YE4R-25	3, 4 Str.	4				Orange					
YE1WAG1	#1 Sol. (.289)	—	0.25	8.58 (218)	6	Red	K-5/8-1, 243, BG				
YE2WAG5	#2 Sol. (.258)	—				Orange					
YE2R-25	1, 2 Str.	2	2 Sol.	4-5/8	2-1/2	Red	K-5/8-1, 243, BG, 8A				
YE25R-25	1/0 Str.	1/0				Yellow					
YE26R-60	2/0 Str.	2/0	1/0 Sol.	9-1/2	6	Gray	249 840 11A	W249 or W-K840	U249 U-K840T	C249	L249
YE27R-60	3/0 Str.	3/0				Black					
YE28R-60	4/0 Str.	4/0	3/8	10-5/8		Pink					
YE30R-60	300	266.8 (26/7) (18/1)	4/0 Sol.			Blue	317,705, K-1-1/8-1	—	U317 U705 U-K1-18-1T	C317	L317
YE32R-60	350-400	336.4 (26/7) (18/1)				Green					
YE361R-60	477, 500	477 (18/1)	9/16			Pink					
YE39R-60	600	556.5 (24/7) (26/7)	5/8	11-7/8	6	Yellow	608	—	U608	C608	L608

* All crimps overlap
†U Die with adapter PT-6515.
‡U Die with adapter PUADP-1.

BURNDY® furnishes many special versions of YE-R including: pin length variations, factory applied pin angles, etc. Contact your BURNDY® representative for your special needs.
For faster installations use BURNDY® PATRIOT® family of battery tools.

Blue highlighted items are industry standard and most frequently ordered.

COMPRESSION SPLICES
TABLE OF CONTENTS

COMPRESSION SPLICES H-44

SERVICE ENTRANCE
Type ES H-45
Type YSU H-46
Type YSD H-47

NEUTRAL
Types YSS, YCS-R, YDS-AT H-48

JUMPER
Type YCS-R H-49
Type YCS-RL H-50
Type YCS-A H-51
Type YCR H-51
Type YCR-R-G H-52
Types YDS, YCS H-53

REPAIR SLEEVE
Type YCU-A H-53
Types YCU-R & YOU-R H-54
Type YCU-R (Static Wire) H-54
Type YDSR-RL H-55

FULL TENSION
Types YDS-A & YDS-AT H-56
Types YDS & YDS-C H-57
Types YDS-W & YDS H-58
Types YDS-R, YDS-RP1, YDS-RP2 H-59 - H-60
Type YDS-RLY H-61
Types YDS-RL & YDS-LT H-62 - H-63
Types YDS-A & YDS-AT H-63
Types YDS-R & YDS-RE H-64
Types YDS-E & YDS-H H-64
Type YDS-K H-65
Types YTS-E H-65
Types YDS-KT & YDS-F H-66
Type YDS-M-T H-66

Blue highlighted items are industry standard and most frequently ordered.

COMPRESSION SPLICES

The BURNDY line of service, full-tension, and jumper sleeves provide a dependable, economical, and easy-to-install method of splicing overhead transmission and distribution lines.

A major part of the Total BURNDY® Compression Program, they are available for copper, aluminum, ACSR, COPPERWELD, ALUMOWELD, Steel, 6201, 5005, ACSR/AW, AWA, and compressed forms for aluminum and ACSR. Each is clearly marked with the installation Die Index number and knurls are provided which show the installer the correct number of crimps and the spacing required. Connections made with BURNDY® INSULINK™ and HYSPLICE™ sleeves have a lower resistance than an equal length of conductor.

HYSPLICE™ sleeves are tapered or chamfered at the ends; externally to provide gradual reduction of pressure on the conductor, and internally to facilitate conductor insertion.

Service Sleeve Design

Service entrance connectors are available insulated (INSULINK™) or uninsulated (LINKIT™). Both are installed with the one-hand OH25 and OUR840 HYTOOL™ or the MD6 HYTOOL™. The INSULINK™ features polyethylene caps which seal out dirt and moisture, and grip the cable insulation leaving both hands free for crimping. The aluminum insert is anchored to the nylon jacket so that it will not move when crimped, ensuring that the insert is always under the die. The jacket is color coded for easy identification of conductor size.

The aluminum LINKIT™ minimizes the effects of galvanic corrosion. It is designed for easy location of crimps, and is color coded.

The service HYSPLICE™ connectors are partial-tension sleeves for splicing the neutral conductor of triplex service. They are installed with MD6, OUR840 and the OH25 HYTOOL™ on aluminum and ACSR conductors from #6 to 1/0.

Copper HYSPLICE™ Sleeve Design

Full-tension holding strength and high conductivity of BURNDY® copper HYSPLICE™ sleeves are accomplished through the combined action of correct contact length, proper number of circular crimps of precisely controlled depth that perform a current carrying and keying function between the conductor and the sleeve.

Aluminum HYSPLICE™ Sleeve Design

HYSPLICE™ sleeves for aluminum conductor not only satisfy the basic tension requirements, but also deal with the problems of "cold flow" of aluminum and the oxide file which forms on the strands. "Cold flow" is compensated for by carefully coordinating the design of the sleeve and its associated installation die. To offset the effects of the non-conductive oxide film present on the surfaces of aluminum cable. BURNDY® HYSPLICE™ sleeves are pre-filled with PENETROX™ joint compound and capped or stripsealed. A solid center barrier forces the PENETROX™ around the cable strands during insertion.

ACSR HYSPLICE™ Sleeve Design

Two-Piece, Full-tension HYSPLICE™

Two-piece, full-tension HYSPLICE™ for ACSR consists of an inner steel sleeve for joining the steel core, and an outer aluminum sleeve for connecting the aluminum strands. To install the two-piece HYSPLICE™, the cable is cut, the aluminum sleeve slid onto the cable, aluminum strands cut back and the steel sleeve installed. The aluminum sleeve is then centered over the steel sleeve, PENETROX™ joint compound injected (PENETROX™ is brushed on cable prior to centering aluminum sleeve on smaller sizes), and the sleeve is crimped.

Single-sleeve, Full-tension UNISPLICE™

The UNISPLICE™ is as easy to install as aluminum full-tension sleeves. The single, heavy walled aluminum sleeve is filled with a special inhibiting compound containing grit particles which key the steel strand in place. The UNISPLICE™ eliminates cutting back of aluminum strands, the need for a separate steel sleeve, and careful position of the aluminum outer sleeve before crimping.

Since the standard pull-out tests are inadequate for evaluating UNISPLICE™ performance, BURNDY® has developed the sustained-tension test that subjects a connector-conductor assembly to a 168 hour sustained load equal to 90% of the conductor strength. This test simulates a service life of 30-40 years at 60% of the conductor strength.

Jumper Sleeves

Since the holding strength required for jumper sleeves is less that that required for full-tension sleeves, the jumper HYSPLICE™ sleeve is shorter. Aluminum, ACSR, sleeves are pre-filled with PENETROX™ joint compound and installed with the same tools and dies as the full-tension sleeves.

TYPE ES

INSULINK™

ACCOMMODATES:
AAC (STR, COMPRESSED, COMPACT**), COPPER, ACSR, AND AAAC

MATERIAL: ALUMINIUM (INSULATED)

RUS Accepted

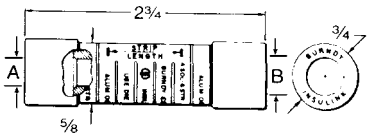

Pre-insulated service entrance compression connector installed with OH25, OUR840 and MD6 HYTOOL™ as well as Y35 and Y750 HYPRESS™ tools. Polyethylene caps prevent dirt from accumulating in barrel, grip cable for easy two-hand installation, and seal out moisture. Aluminum connector is anchored to jacket, assuring the connector is under the die when crimping. Nylon jacket insulates connector electrically and protects against water and weather. Superior color coding. Pre-filled with PENETROX™ joint compound and stripsealed to limit oxidation and to increase the life of the connection. Do not use insulated sealed connectors on bare conductors. Refer to LINKIT™ type connectors.

■ Not for use on bare conductors.
▲ Accommodates 1/0 stranded aluminum and copper, concentric, compressed and compact conductors.
** Accommodates compact conductors where stated in the table.
* For faster installations use BURNDY® PATRIOT® family of battery tools.

Catalog Number	Side A ■			Side B ■			Die Index	Installation Tooling* (# of Crimps per End)			
	ACSR, 6201, 5005	Aluminum & Copper	Color Code	ACSR, 6201, 5005	Aluminum & Copper	Color Code		Dieless OH25	MD6/MD7 Series	OUR840	Y35/Y750 Series
ES8W8W	—	10 Str. 8 Sol.	Brown	—	10 Str. 8 Sol.	Brown	BG or 5/8	(1)	WBG (1)*	XNBG (1)*	UBG (1)*
ES6W8W		8 Str. 6 Sol. #8 AL Compt	Green	—							
ES6W6W				—	8 Str. 6 Sol. #8 AL Compt	Green					
ES4W8W	6	5, 6 Str. 4 Sol.	Blue	—	10 Str. 8 Sol.	Brown					
ES4W6W				—	8 Str. 6 Sol. #8 AL Compt	Green					
ES4W4W				6	5, 6 Str. 4 Sol.	Blue					
ES2W8W	4	3, 4 Str. 2 Sol.	Orange	—	10 Str. 8 Sol.	Brown					
ES2W6W				—	8 Str. 6 Sol. #8 AL Compt	Green					
ES2W4W				6	5, 6 Str. 4 Sol.	Blue					
ES2W2W				4	3, 4 Str. 2 Sol.	Orange					
ES2R8W	2	1 Str. 2 Str. #1 AL Compt #2 AL Compt	Red	—	10 Str. 8 Sol.	Brown					
ES2R6W				—	8 Str. 6 Sol. #8 AL Compt	Green					
ES2R4W				6	5, 6 Str. 4 Sol.	Blue					
ES2R2W				4	3, 4 Str. 2 Sol.	Orange					
ES2R2R				2	1 Str. 2 Str. #1 AL Compt #2 AL Compt	Red					
ES25R6W	1/0, 1	1/0 Str. 1-19 Str.	Yellow	—	8 Str. 6 Sol. #8 AL Compt	Green					
ES25R4W				6	5, 6 Str. 4 Sol.	Blue					
ES25R2W				4	3, 4 Str. 2 Sol.	Orange					
ES25R2R				2	2 Str. 1 Str. #1 AL Compt #2 AL Compt	Red					
ES25R25R				1/0, 1	1/0 Str.	Yellow					
ES25A25A	—	1/0 Str. ▲	Yellow	—							
ES25A4W	—			6	5, 6 Str. 4 Sol.	Blue					
ES25A2W	—			4	3, 4 Str. 2 Sol.	Orange					

Blue highlighted items are industry standard and most frequently ordered.

TYPE YSU

5/8" LINKIT™

ACCOMMODATES:
AAC (STR, COMPRESSED, COMPACT**), COPPER, ACSR, AND AAAC

MATERIAL: ALUMINIUM (UNINSULATED)

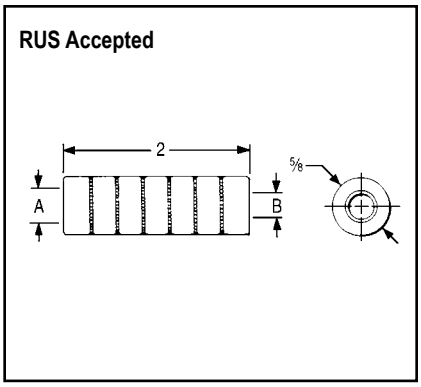

Heavy-walled aluminum tubing with solid barrier minimizes galvanic corrosion of conductors. Accommodates neutral strands of Type SE Service Entrance conductor as well as other conductors. Installed with standard tooling. Color Coded. Pre-filled with PENE TROX™ joint compound and Stripsealed to limit oxidation and to increase the life of the connection.

▲ Accommodates 1/0 standard aluminum and copper concentric, compressed and compact conductors.
** Accommodates compact conductors where stated in the table.
* For faster installations use BURNDY® PATRIOT® family of battery tools.

Catalog Number	Side A			Side B			Die Index	Installation Tooling* (# of Crimps per End)			
	ACSR, 6201, 5005	Aluminum & Copper	Color Code	ACSR, 6201, 5005	Aluminum & Copper	Color Code		Dieless OH25	MD6/MD7 Series	OUR840	Y35/Y750 Series
YSU6W6W	—	8 Str. 6 Sol. #8 Al Compt	Green	—	8 Str. 6 Sol. #8 Al Compt	Green	243 BG or 5/8	(1)	WBG (1)*	XNBG (1)*	UBG (1)*
YSU4W8W	6	5, 6 Str. 4 Sol. #4 Al Compt	Blue	—	8 Sol. 10 Str.	Brown					
YSU4W6W				—	6 Sol. 8 Str. #8 Al Compt	Green					
YSU4W4W				6	5, 6 Str. 4 Sol. #4 Al Compt	Blue					
YSU2W8W	4	3, 4 Str. 2 Sol.	Orange	—	8 Sol. 10 Str.	Brown					
YSU2W6W				—	6 Sol. 8 Str. #8 Al Compt	Green					
YSU2W4W				6	5, 6 Str. 4 Sol. #4 Al Compt	Blue					
YSU2W2W				4	3, 4 Str. 2 Sol.	Orange					
YSU2R8W	2	2 Str. 1 Str. #1 Al Compt #2 Al Compt	Red	—	8 Sol. 10 Str.	Brown					
YSU2R6W				—	6 Sol. 8 Str. #8 Al Compt	Green					
YSU2R4W				6	5, 6 Str. 4 Sol. #4 Al Compt	Blue					
YSU2R2W				4	3, 4 Str. 2 Sol.	Orange					
YSU2R2R				2	2 Str. 1 Str. #1 Al Compt #2 Al Compt	Red					
YSU25R6W	1/0	1/0 Str. 2/0 Al Compt 1/0 Al Compt	Yellow	—	8 Str. 6 Sol. #8 Al Compt	Green					
YSU25R4W				6	5, 6 Str. 4 Sol. #4 Al Compt	Blue					
YSU25R2W				4	3, 4 Str. 2 Sol.	Orange					
YSU25R2R				2	2 Str. 1 Str. #1 Al Compt #2 Al Compt	Red					
YSU25R25R				1/0	1/0 Str. 2/0 Al Compt 1/0 Al Compt	Yellow					
YSU25A25A	1-1	1/0 Str. ▲	Yellow	1/0	1/0 Str.	Yellow					

Blue highlighted items are industry standard and most frequently ordered.

TYPE YSD

.840 LINKIT™

ACCOMMODATES:
AAC (STR, COMPRESSED, COMPACT**), COPPER, ACSR, AND AAAC

MATERIAL: ALUMINUM (UNINSULATED)

Aluminum compression sleeve with solid center barrier. Designed for commercial and heavy residential services. Installed with standard tooling. Pre-filled with PENETROX™ joint compound, capped and stripsealed to limit oxidation and to increase the life of the connection.

RUS Accepted

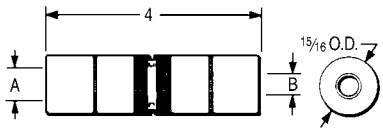

* Multiple crimp die set, makes more than one crimp per tool compression. Figure indicates number of compressions.
** Accommodates compact conductors where stated in the table.
*** For faster installations use BURNDY® PATRIOT® family of battery tools.

Catalog Number	Side A			Side B			Die Index	Installation Tooling *** (Number of Crimps per End)		
	ACSR, 6201, 5005	Aluminum & Copper	Color Code	ACSR, 6201, 5005	Aluminum & Copper	Color Code		MD6/MD7 Series	OUR840	Y35/Y750* Series
YSD25R25R	1/0	1/0 Str. 2/0 AL Compt	Yellow	1/0	1/0 2/0 ALCompt	Yellow	249 K-840	WK840 (7) W249 (4)	X840 (7) X249 (8)	UK840 (4) U249 (2)
YSD26R2W	2/0	2/0 Str. 3/0 AL Compt	Gray	4	3, 4 Str. 2 Sol. #2 AL Compt	Orange				
YSD26R2R				2	2 Str. 1 Sol. 1/0 AL Compt	Red				
YSD26R25R				1/0	1/0 Str. 2/0 AL Compt	Yellow				
YSD26R26R				2/0	2/0 Str. 3/0 AL Compt	Gray				
YSD27R2W	3/0	3/0 Str. 4/0 AL Compt	Black	4	3, 4 Str. 2 Sol. #2 AL Compt	Orange				
YSD27R2R				2	2 Str. 1 Sol. 1/0 AL Compt	Red				
YSD27R25R				1/0	1/0 2/0 ALCompt	Yellow				
YSD27R26R				2/0	2/0 Str. 3/0 AL Compt	Gray				
YSD27R27R				3/0	3/0 Str. 4/0 AL Compt	Black				
YSD28R2W	4/0	4/0 Str. 300 AL Compt	Pink	4	3, 4 Str. 2 Sol. #2 AL Compt	Orange				
YSD28R2R				2	2 Str. 1 Sol. 1/0 AL Compt	Red				
YSD28R25R				1/0	1/0 2/0 ALCompt	Yellow				
YSD28R26R				2/0	2/0 Str. 3/0 AL Compt	Gray				
YSD28R27R				3/0	3/0 Str. 4/0 AL Compt	Black				
YSD28R28R				4/0	4/0 Str. 300 AL Compt	Pink				

Blue highlighted items are industry standard and most frequently ordered.

TYPES YSS, YCS-R & YDS-AT

HYSPLICE™

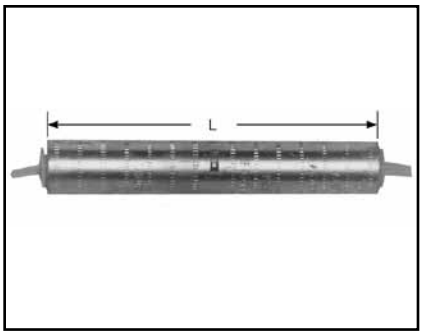

ACCOMMODATES:
AAC (STR, COMPRESSED, COMPACT**), COPPER, ACSR AND AAAC

MATERIAL: ALUMINUM

Single aluminum sleeve designed for service drop or short span overhead distribution lines. Installed with OH25 one-hand tool, and other standard tooling. Pre-filled with PENETROX™ joint compound and color coded capped and stripsealed to limit oxidation and to increase the life of the connection.

Catalog Number	Conductor	L	Die Index	Color Code	Tools, Die Set Catalog Number*** & (Crimps per End)		OH25 Applications	
					MD7, MD6	Y35, Y750, Y45†, Y46‡	Conductor	OH25 (Indents per End)
YSS6RG2	6 ACSR 4 Sol. Al	4.00	BG	Blue	BG (6) W-BG (3)*	U-BG (3)*	—	—
YSS6R	6 ACSR 4 Sol. Al	4.72	162	Blue	W162 (4)	U162 (2)*	—	—
YDS4WA **YDS4CA**	4 Sol. Al 4 Str. Al (7)	2-5/8	162	Orange	W162 (4)	U162 (1)*	—	—
YSS4R	4 ACSR 2 Sol. Al 4 Al (7)	3.78	BG or 5/8	Orange	BG (6) W-BG (3)*	U-BG (3)*	4 7 Al 4 5005 Al 4 5005 Al 4 (6-1) ACSR 4 (6-1) ACSR 4 (7-1) ACSR 4 (7-1) ACSR 2 Sol. Al 2 Sol. Al	(3) (2) (3) (3) (2) (3) (2) (3) (2)
YSS2R	2 ACSR 2 Al (7)	3.78	BG or 5/8	Red	BG (6) W-BG (3)*	U-BG (3)*	2 (6-1) ACSR 2 (7-1) ACSR 2 (7-1) ACSR 2 7 Al	(3) (3) (2) (3)
YDS25AT	1/0 (7)	7-1/4	243	Yellow	W243(6)	U243(3)	1/0 7 Al	(4)
YCS25R	1/0 ACSR	7.09	243	Yellow	BG (12) W-BG (6)*	U-BG (6)*	1/0 (6-1) ACSR 1/0 (6-1) ACSR	(2) (3)

* Multiple crimp die set; makes more than one crimp per tool compression. Figure indicates number of compressions.

** Accommodates compact conductors where stated in the table.
† U Die with adapter PT-6515
‡ U Die with adapter PUADP-1.

*** For faster installations use BURNDY® PATRIOT® family of battery tools.

Blue highlighted items are industry standard and most frequently ordered.

TYPE YCS-R

HYSPLICE™

ACCOMMODATES:
AAC (STR, COMPRESSED), ACSR AND AAAC

MATERIAL: ALUMINUM

TENSION RATING:
ANSI C119.4 CLASS 2
(PARTIAL TENSION)

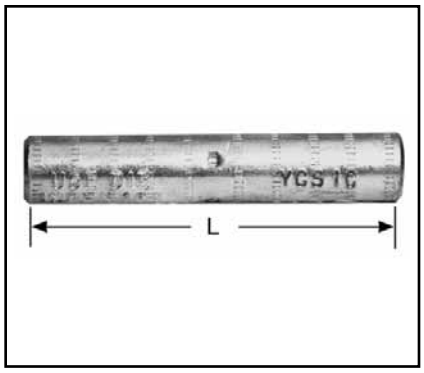

RUS Accepted

HYSPLICE™ sleeve designed to withstand jumper loop tensile and vibration stresses. Made of aluminum with staked-in cable stop. Installed with same die as equivalent full tension sleeves.

Pre-filled with PENETROX™ joint compound, stripsealed and capped to limit oxide growth and to increase the life of the connection.

Catalog Number	Conductor		L	Die Index	Tools, Die Set Catalog Number, & (Crimps per End)					
	ACSR, 6201, 5005	All Aluminum			MD7, MD6	Y35, Y750	Y45	Y46	Y48B	Y60BHU
YCS4R	4	4 (7)	5	237	W237 (4)	U237 (2)	†	‡	—	—
YCS2R	2	2 (7)	5	239	W239 (4)	U239 (2)	†	‡	—	—
YCS25R	1/0	1/0 (7, 19)	7-1/8	243	W-BG (5) W243 (7)	U-BG (6)* U243 (4)	†	‡	—	—
YCS26R	2/0	2/0 (7, 19)	7	245	W245 (8)	U245 (4)	†	‡	—	—
YCS27R	3/0 110.8 (12-7)	3/0 (7, 19)	5-3/4	247	W247 (6)	U247 (3)	†	‡	—	—
YCS28R	4/0	4/0 (7, 19)	5-3/4	249	W249 (6)	U249 (3)	†	‡	C249 (2)	L249 (2)
YCS30R	266.8 (6/7, 18-1, 26/7)	266.8	6-1/2	251	W251 (12)	U251 (6)	†	‡	C251 (3)	L251 (3)
YCS321R	336.4 (18-1) 300	336.4 (19)	6-1/2	490	—	U490 (5)	†	‡	C490 (2)	L490 (2)
YCS33R	336.4 (26-7, 30-7)	397.5 (19)	8-3/4	316	—	U316 (6)	†	‡	C316 (2)	L316 (2)
YCS35R	397.5 (18-1, 26-7, 30-7)	477 (19, 37) 500 (37, 61)	8-7/8	317	—	U317 (6)	†	‡	C317 (2)	L317 (2)
YCS361R	477 (18-1)	500 (37, 61)	8-1/4	327	—	U327 (6)	†	‡	C327 (2)	L327 (2)
YCS37R	477 (24-7, 26-7, 30-7) 556.5 (18-1)	556.5 (19, 37)	8-3/4	261	—	U261 (6)	†	‡	C261 (2)	L261 (2)
YCS39R	556.5 (24-7, 26-7)	—	10-3/4	608	—	U608 (9)	†	‡	C608 (3)	L608 (3)
YCS43R	605 (30-19) 636 (24-7, 26-7, 30-19) 666.6 (24-7,54-7)	795 (37)	10-5/8	292 or 319	—	—	S292 (6) S319 (6)	P292 (6) P319 (6)	C292 (3) C319 (3)	L292 (3) L319 (3)
YCS453R	795 (36-1, 45-7)	—	10-5/8	292	—	—	S292 (6)	P292 (6)	C292 (3)	L292 (3)
YCS45R	795 (26-7, 54-7)	900 (61, 91)	10-5/8	352	—	—	S352 (6)	P352 (6)	C352 (3)	L352 (3)

† U Die with adapter PT-6515
‡ U Die with adapter PUADP-1.
For faster installations use BURNDY® PATRIOT® family of battery tools.

Blue highlighted items are industry standard and most frequently ordered.

TYPE YCS-RL

UNISPLICE™

ACCOMMODATES:
AAC (STR, COMPRESSED, COMPACT), ACSR AND AAAC

MATERIAL: ALUMINUM

TENSION RATING:
ANSI C119.4 CLASS 2
(PARTIAL TENSION)

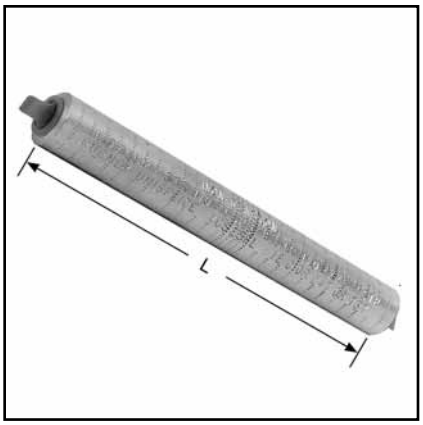

Aluminum jumper sleeve, with cable stop, designed to be installed with same dies as equivalent full-tension UNISPLICE™. Withstands jumper loop-tensile and vibration stresses. Pre-filled with PENETROX™ joint compound, stripsealed and capped to limit oxide growth and to increase the life of the connection.

Catalog Number	Conductor †††	L	Die Index	Tools, Die Set Catalog Number, & (Crimps per End)	
				MD7, MD6	Y35, Y750, Y45†, Y46‡
YCS25RL	1/0 ACSR (6-1) 1/0 6201 (7) 1/0 5005 (7) 1/0 AAC (7)	6-1/4	C or 247 or 702	W-C (12) W702 (6)*	U247 (3)
YCS26RL	2/0 ACSR (6-1) 2/0 6201 (7) 2/0 5005 (7) 2/0 AAC (7)	5-5/8	659	—	U659 (3)
YCS28RL	4/0 ACSR (6-1) 4/0 6201 (7) 4/0 5005 (7) 4/0 AAC (7)	5-1/4	654	—	U654 (3)
YCS321RL	336.4 ACSR (18-1) 336.4 AAC (19)	5-1/4	655	—	U655 (3)
YCS341RL	397.5 AAC (19) 397.5 ACSR (18-1) 400 AAC (37, 61) 336.4 ACSR (18-1) 336.4 ACSR (26-7) 336.4 ACSR (30-7)	5-5/8	327	—	U327 (4)

* MD6 NON-BOW Dies produce straight sleeves without rotating tool.
† U Die with adapter PT-6515
‡ U Die with adapter PUADP-1.

††† Accommodates ACSR with aluminized steel core.
For faster installations use BURNDY® PATRIOT® family of battery tools.

Blue highlighted items are industry standard and most frequently ordered.

TYPE YCS-A

HYSPLICE™

ACCOMMODATES:
AAC (STR, COMPRESSED, COMPACT)

MATERIAL: ALUMINIUM

TENSION RATING:
ANSI C119.4 CLASS 1A (NORMAL TENSION)

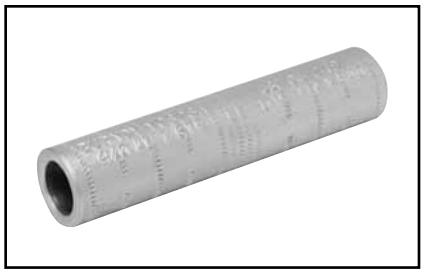

HYSPLICE™ sleeve designed to withstand jumper loop tensile and vibration stresses up to 60% RBS. Made of aluminum with staked-in cable stop. Installed with same die as equivalent full-tension sleeve. Made from electrolytic grade aluminum. Surface oxides removed at factory and sealed.

Pre-filled with PENETROX™ A joint compound, stripsealed and capped to limit oxide growth and to increase life of connection. For ACSR splices use the YCS-R or YCS-RL.

Catalog Number	Conductor	L	Die Index	Tools, Die Set Catalog Number, & (Crimps per End)					
				MD7, MD6	Y53, Y750	Y45	Y46	Y48B	Y60BHU
YCS26A	2/0 (7)	5-1/8	245	W245 (4)	U245 (2)	†	‡	—	—
YCS28A	4/0 (7, 19)	4	249	W249 (4)	U249 (2)	†	‡	C249 (1)	L249 (1)
YCS301A	336.4 (19, 37)	4-3/8	321	—	U321 (3)	†	‡	C321 (2)	L321 (2)
YCS311A	397.5 (19)	5-5/8	468	—	U468 (4)	†	‡	—	—
YCS331A	477 (19, 37, 61) 500 (19, 37, 61)	6-1/4	317	—	U317 (4)	†	‡	C317 (2)	L317 (2)
YCS351A	556.5 (19, 37)	8-3/4	261	—	U261 (6)	†	‡	C261 (2)	L261 (2)
YCS361A	636 (37)	7-3/8	469	—	—	S469 (4)	P469 (4)	C469 (2)	L469 (2)
YCS391A	795 (37, 61)	10-1/2	342	—	—	S342 (4)	P342 (6)	C342 (3)	L342 (3)

† U Die with adapter PT-6515
‡ U Die with adapter PUADP-1.

For faster installations use BURNDY® PATRIOT® family of battery tools.

TYPE YCR

JUMPER SLEEVE REDUCER

ACCOMMODATES: COPPER

MATERIAL: COPPER

TENSION RATING:
ANSI C119.4 CLASS 1A (NORMAL TENSION)

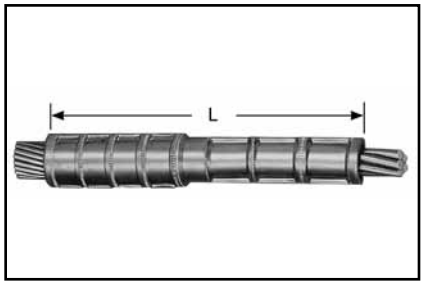

Copper sleeve designed to join different size copper conductors on transmission jumper applications. Installed with same dies as full-tension sleeves.

* Multiple crimp die set; makes more than one crimp per tool compression. Figure indicates number of compressions.
† UDie with adapter PT-6515.
‡ U Die with adapter PUADP-1.
For faster installations use BURNDY® PATRIOT® family of battery tools.

Catalog Number	Copper Conductor		L	Tool, Die Set Catalog Number, & (Crimps per End)									
				Side A					Side B				
	Side A	Side B		Die Index	MD7, MD6	Y35, Y750, Y45†, Y46‡	Y48B	Y60BHU	Die Index	MD6	Y35, Y750, Y45†, Y46‡	Y48B	Y60BHU
YCR2625	2/0 (7, 12, 19)	1/0 (7, 19)	3-3/8	166	W166 (6)	U166/U459	C166 (1)	L166 (1)	165	W165 (3)	U165/U205	C165 (1)	L165 (1)
YCR2725	3/0 (7, 19)	1/0 (7, 19)	3-1/2	167	—	U167/U568	C167 (1)	L167 (1)	165	W165 (3)	U165/U205	C165 (1)	L165 (1)
YCR2825	4/0 (7, 12, 19)	1/0 (7, 19)	3-3/8	168	—	U168 (3)	C168 (1)	L168 (1)	165	W165 (3)	U165/U205	C165 (1)	L165 (1)

Blue highlighted items are industry standard and most frequently ordered.

TYPE YCR-R-G

HYSPLICE™

ACCOMMODATES:
AAC (STR, COMPRESSED), ACSR, AAAC, COPPER

MATERIAL: ALUMINUM

TENSION RATING: ANSI C119.4 CLASS 2 (PARTIAL TENSION)

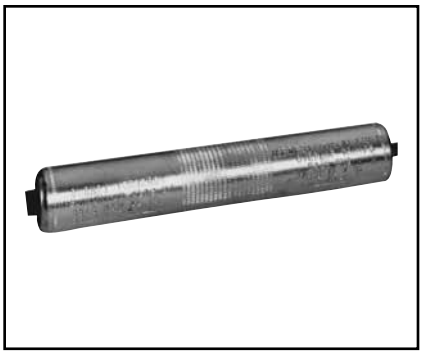

Heavy-walled aluminum sleeve designed to connect all aluminum or ACSR to copper conductors, in all service conditions encountered in transmission and distribution. Sleeve has solid center barrier and is pre-filled with PENETROX™ joint compound, stripsealed and capped to limit oxide growth and to increase life of connection.

* Crimps overlap on both ends.
† U Die with adapter PT-6515
‡ U Die with adapter PUADP-1
For faster installations use BURNDY® PATRIOT® family of battery tools.

Catalog Number	Side A		Side B		L	O.D.	Tools, Die Set Catalog Number, & (Crimps per End)		
	ACSR, 6201, 5005	Aluminum, Copper	ACSR, 6201, 5005	Aluminum, Copper			Die Index	Y35, Y750, Y45 †, Y46 ‡	Y60B
YCR25RG6	1/0 (6-1)	1/0 (7, 12, 19)	1/0 (6-1)	1/0 (7, 12, 19)	6-3/8	1-1/16	654 or 705	U654 U705 Crimps Overlap	L654 Crimps Overlap
YCR26RG2	2/0 (6-1)	2/0 (7, 12, 19)	1/0 (6-1)	1/0 (7, 12, 19)					
YCR26RG3			2/0 (6-1)	2/0 (7, 12, 19)					
YCR27RG5	3/0 (6-1)	3/0 (7, 12, 19)	1/0 (6-1)	1/0 (7, 12, 19)					
YCR27RG6			2/0 (6-1)	2/0 (7, 12, 19)					
YCR28RG5	4/0 (6-1)	4/0 (7, 12, 19)	1/0 (6-1)	1/0 (7, 12, 19)					
YCR28RG6			2/0 (6-1)	2/0 (7, 12, 19)					
YCR28RG7			3/0 (6-1)	3/0 (7, 12, 19)					
YCR28RG8			4/0 (6-1)	4/0 (7, 12, 19)					
YCR291RG2	266.8 (18-1)	250 (19, 37) 266.8 (7, 12, 19)	2/0 (6-1)	2/0 (7, 12, 19)	7-3/8	1-1/4	317 or 705	U317 U705 Crimps Overlap	L317 Crimps Overlap
YCR291RG3			3/0 (6-1)	3/0 (7, 12, 19)					
YCR291RG4			4/0 (6-1)	4/0 (7, 12, 19)					
YCR291RG5			266.8 (18-1)	250 (19, 37) 266.8 (7, 12, 19)					
YCR30RG4	266.8 (26-7)	300 (19, 37) 366.4 (19)	1/0 (6-1)	1/0 (7, 12, 19)					
YCR30RG6			3/0 (6-1)	3/0 (7, 12, 19)					
YCR30RG7			4/0 (6-1)	4/0 (7, 12, 19)					
YCR32RG1	336.4 (18-1) (26-7)	350 (19, 37) 397.5 (19)	1/0 (6-1)	1/0 (7, 12, 19)					
YCR32RG2			2/0 (6-1)	2/0 (7, 12, 19)					
YCR32RG3			3/0 (6-1)	3/0 (7, 12, 19)					
YCR32RG4			4/0 (6-1)	4/0 (7, 12, 19)					
YCR32RG5			266.8 (18-1)	250 (19, 37) 266.8 (7, 12, 19)					
YCR32RG6			266.8 (26-7)	300 (19, 37) 366.4 (19)	6-5/8				
YCR32RG7			336.4 (18-1) (26-7)	350 (19, 37) 397.5 (19)					

Blue highlighted items are industry standard and most frequently ordered.

TYPES YDS & YCS

HYSPLICE™

ACCOMMODATES: COPPER

MATERIAL: COPPER

TENSION RATING:
ANSI C119.4 CLASS 1A
(NORMAL TENSION)

Loop HYSPLICE™ connector designed to withstand jumper loop tensile and vibration stresses up to 60% RBS. Made of pure copper tubing. Installed with standard HYSPLICE™ tools and dies.

RUS Accepted.

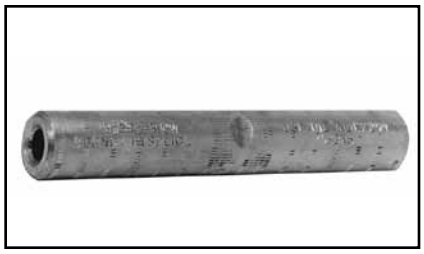

Catalog Number	Conductor	L	Die Index	Tools, Die Set Catalog Number, & (Crimps per End)			
				MD7, MD6	Y35, Y750, Y45†, Y46‡	Y48B	Y60BHU
YDS8W	8 Sol.	1-5/8	171	W171 (1)	U171 (1)*	—	—
YDS6W	6 Sol.	2-5/8	161	W161 (2)	U161 (1)*	—	—
YDS4W	4 Sol.	2-1/2	162	W162 (4)	U162 (1)*	—	—
YDS2W	2 Sol.	3-3/4	163	W163 (6)	U163 (2)*	—	—
YDS6C	6 (7)	2-3/4	161	W161 (2)	U161 (1)*	—	—
YDS4C	4 (7)	2-5/8	162	W162 (4)	U162 (1)*	—	—
YDS2C	2 (7), 3 (3)	3-5/8	163	W163 (6)	U163 (2)*	—	—
YDS1C	1 (7, 19)	3-1/8	164	W164 (6)	U164 (3)*	—	—
YCS25	1/0 (7, 19)	3-3/8	165	W165 (3)	U165 (3)	—	—
YCS26	2/0 (7, 11, 12, 19)	3-3/8	166	W166 (6)	U166 (3)	—	—
YCS27	3/0 (7, 19)	3-1/4	167	—	U167 (3)	—	—
YCS28	4/0 (7, 12, 19)	3-1/8	168	—	U168 (3)	C168 (1)	L168 (1)
YCS29	250 (7, 37, 19)	3-5/8	169	—	U169 (4)	C169 (2)	L169 (2)
YCS30	300 (19, 37)	5-3/8	170	—	U170 (4)	C170 (1)	L170 (1)
YCS31	350 (12, 19, 37)	5-3/8	267	—	U267 (6)	C267 (2)	L267 (2)
YCS32	400 (19, 37)	5-3/4	209	—	U209 (6)	C209 (2)	L209 (2)
YCS34	500 (19, 37)	5-1/8	210	—	U210 (6)	C210 (2)	L210 (2)
YCS39	750 (37)	6-7/8	627	—	—	C627 (3)	L627 (3)
YCS44	1000 (61, 37)	7-3/4	345	—	—	C345 (4)	L345 (4)

* Multiple crimp die set; makes more than one crimp per tool compression. Figure indicates number of compressions.
† UDie with adapter PT-6515.
‡ U Die with adapter PUADP-1.
For faster installations use BURNDY® PATRIOT® family of battery tools.

TYPE YCU-A

REPAIR SLEEVE

ACCOMMODATES: AAC (STR, COMPRESSED, COMPACT)

MATERIAL: ALUMINUM

For restoring conductivity to damaged conductors. Made of cast aluminum. Use same die as equivalent full-tension sleeve. Use of PENETROX™ joint compound required.

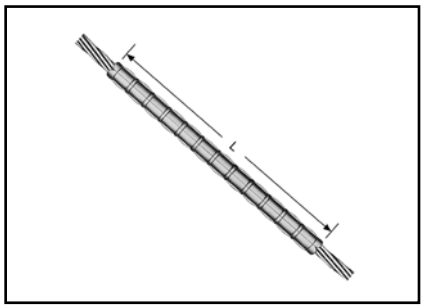

* Multiple crimp die set; makes more than one crimp per tool compression. Figure indicates number of compressions.
† UDie with adapter PT-6515.
‡ U Die with adapter PUADP-1.
For faster installations use BURNDY® PATRIOT® family of battery tools.

Catalog Number	Conductor	L	Die Index	Tools, Die Set Catalog Number, & (Number of Crimps)					
				MD7, MD6	Y35, Y750	Y45	Y46	Y48B	Y60BHU
YCU2CA	2 (7)	7-5/8	163	W163 (27)	U163 (9)*	†	‡	—	—
YCU25A	1/0 (7)	8-3/4	243	W243 (20)	U243 (10)	†	‡	—	—
YCU28A	4/0 (7, 19)	11-7/8	249	W249 (28)	U249 (14)	†	‡	C249 (7)	L249 (7)
YCU291A	266.8 (7)	11-5/8	251	—	U251 (20)	†	‡	C251 (10)	L251 (10)
YCU301A	336.4 (19,37)	11-5/8	321	—	U321 (20)	†	‡	C231 (10)	L231 (10)

Blue highlighted items are industry standard and most frequently ordered.

TYPES YCU-R & YOU-R

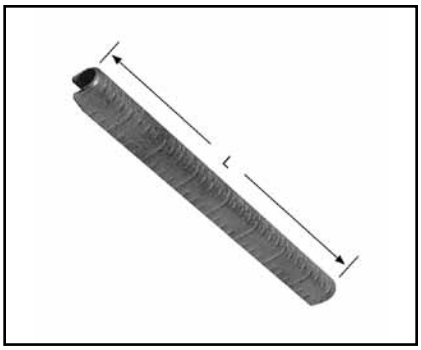

ACCOMMODATES: ACSR (STR, COMPRESSED, COMPACT)

MATERIAL: ALUMINUM

For restoring conductivity to damaged conductors. Made of cast aluminum. Sizes up thru 266.8 are U-shaped. For 300 and larger, sleeves are two-piece interlocking elements. Use same die as equivalent full-tension sleeve. Use of PENETROX™ joint compound required.

Catalog Number	Conductor	L	Die Index	Tools, Die Set Catalog Number & (Number of Crimps)					
				MD7, MD6	Y35, Y750	Y45	Y46	Y48B	Y60BHU
YCU4R	4 (6-1), (7-1) 4AAC	6-1/4	237	W237 (12)	U237 (6)	†	‡	—	—
YCU4RG1	4 (7-1)	8-1/4	239	W239 (16)	U239 (8)	†	‡	—	—
YCU2R	2 (6-1, 7-1)	8-1/4	239	W239 (16)	U239 (8)	†	‡	—	—
YCU25R	1/0 (6-1)	8-3/4	243	W243 (20)	U243 (10)	†	‡	—	—
YCU26R	2/0 (6-1)	10	245	W245 (24)	U245 (12)	†	‡	—	—
YCU27R	3/0 (6-1)	10	247	W247 (24)	U247 (12)	†	‡	—	—
YCU28R	4/0 (6-1)	11-7/8	249	W249 (28)	U249 (14)	†	‡	C249 (7)	L249 (7)
YCU30R	266.8 (6-1, 18-1, 26-7)	11-5/8	251	—	U251 (20)	†	‡	C251 (10)	L251 (10)
YOU32R	300 (26-7)	13	316	—	U316 (21)	†	‡	C316 (7)	L316 (7)
YCU321R	336.4 (18-1)	11-5/8	547, 655, 490	—	U490 (20)	†	‡	C490 (10)	L490 (10)
YOU33R	336.4 (26-7, 30-7)	13	316	—	U316 (21)	†	‡	C316 (7)	L316 (7)
YOU35R	397.5 (18-1, 26-7, 30-7)	13	317, 426	—	U317 (21)	†	‡	C317 (7)	L317 (7)
YOU361R	477 (18-1)	12-47/50	327	—	U327 (21)	†	‡	C327 (7)	L327 (7)
YOU37R	477 (24-7, 26-7, 30-7)	12-47/50	261, 318	—	U261 (21)	†	‡	C261 (7)	L261 (7)
YOU39R	556.5 (24-7, 26-7)	13-3/4	608	—	U608 (24)	†	‡	C608 (8)	L608 (8)
YOU41R	605 (24-7, 54-7)	13-3/4	292, 578, 319	—	—	S292 (24)	P292 (24)	C292 (8)	L292 (8)
YOU43R	605 (30-19) 636 (26-7, 30-19) 666.6 (24-7, 54-7)	13-3/4	292, 319, 578	—	—	S292 (24) S319 (24)	P292 (24) P319 (24)	C352 (8) C319 (8) C292 (8)	L292 (8) L319 (8)
YOU421R	636 (36-1)	13-3/4	292, 578	—	—	S292 (24)	P292 (24)	C292 (8)	L292 (8)
YOU453R	715.5 (26-7) 795 (36-1)	13-3/4	292, 578	—	—	S292 (24)	P292 (24)	C292 (8)	L292 (8) L578 (8)
YOU44R	715.5 (54-7)	13-3/4	319	—	—	S319 (24)	P319 (24)	C319 (8)	L319 (8)
YOU45R	795 (26-7, 54-7)	13-3/4	352, 579	—	—	S352 (24) S579 (24)	P352 (24) P579 (24)	C352 (8) C579 (8)	L352 (8) L579 (8)
YOU48R	900 (54-7) 954 (54-7)	14-1/4	575	—	—	—	—	C575 (10)	L575 (10)
YOU49R	1033.5 (54-7)	14-1/4	422	—	—	—	—	—	L422 (10)

† U Die with adapter PT-6515. ‡ U Die with adapter PUADP-1.

For faster installations use BURNDY® PATRIOT® family of battery tools.

TYPE YCU-R

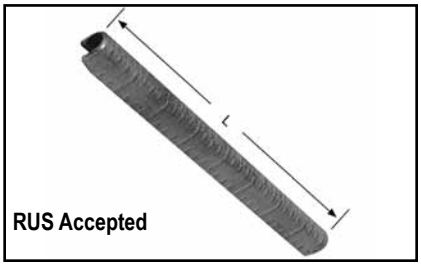

Repair Sleeve for ACSR "Static Wire"

HYSPLICE™ sleeve designed to withstand jumper loop tensile and vibration stresses. Made of aluminum with staked-in cable stop. Installed with same die as equivalent full tension sleeves. Pre-filled with PENETROX™ joint compound.

Catalog Number	Conductor	L	Die Index	Tools, Die Set Catalog Number & (Number of Crimps)			
				MD7, MD6	Y35, Y750, Y45†, Y46‡	Y48B	Y60BHU
YCU27R	110.8 (12-7)	10	247	W247 (24)	U247 (12)	—	—
YCU28R	159 (12-7)	11-7/8	249	W249 (28)	U249 (14)	C249 (7)	L249 (7)
YCU30R	190.8 (12-7)	11-5/8	251	—	U251 (20)	C251 (10)	L251 (10)

† U Die with adapter PT-6515. ‡ U Die with adapter PUADP-1.

For faster installations use BURNDY® PATRIOT® family of battery tools.

Blue highlighted items are industry standard and most frequently ordered.

TYPE YDSR-RL UNISPLICE™ Replacement Splice

UNISPLICE™

ACCOMMODATES: AAC (STR, COMPACT), ACSR, and AAAC

MATERIAL: ALUMINUM

TENSION RATING:
ANSI C119.4 CLASS 1A
(FULL TENSION)

Single sleeve aluminum UNISPLICE™ is designed to facilitate the permanent replacement of existing line splices, including the automatic type. Utilizing all the benefits of the standard UNISPLICE™, the extra long Replacement UNISPLICE™ fills the gap of a cutout splice and eliminates the need to find like conductor. It also reduces installation time of the current standard methods by half, reducing the total number of splices from two to one. All splices are prefilled with PENETROX™ joint compound, stripsealed and capped to limit oxide growth and to increase the life of the connection.

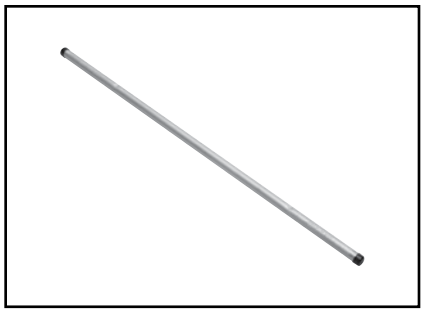

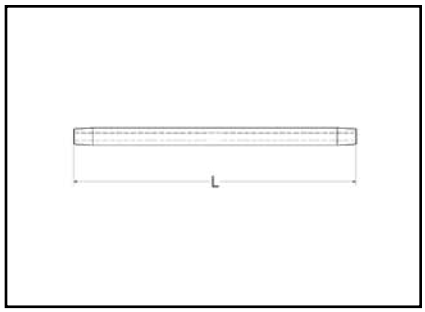

① U Die with adapter PT-6515.
② U Die with adapter PUADP-1.
* Multiple crimp die set; makes more than one crimp per tool compression. Figure indicates number of compressions.
** MD6 NON-BOW Dies produce straight sleeves without rotating tool.
† Overlap Crimps
For faster installations use BURNDY® PATRIOT® family of battery tools.

Catalog Number	Conductor		L	Die Index	Installation Tooling Data (# of crimps per end)				
	AWG / kcmil	Str.			MD7, MD6 HYTOOL™	Y35	Y750	Y45 ①	Y46 ②
YDSR4RL	4 ACSR 4 6201 4 5005 4 AAC	6-1; 7-1 7 7 7	24.63"	BG 687 243	W-BG (11)* W687 (9)** W243 (11)	UBG (9)* U243 (6)	UBG (9) U243 (6)	UBG (9) U243 (6)	UBG (9) U243 (6)
YDSR2RL	2 ACSR 2 6201 2 5005 2 AAC	6-1; 7-1 7 7 7	28.00"	BG 687 243	W-BG (20) W687 (10)** W243 (10)	UBG (8)* U243 (5)	UBG (8) U243 (5)	UBG (8) U243 (5)	UBG (8) U243 (5)
YDSR25RL	1/0 ACSR 1/0 6201 1/0 5005 1/0 AAC	6-1 7 7 7	34.13"	C 167 247 660 702	WC (30) W247 (14) W660 (15) W702 (14)**	U167/U568 (15) U247 (8) U660 (8)	U167/U568 (15) U247 (8) U660 (8)	U167/U568 (15) U247 (8) U660 (8)	U167/U568 (15) U247 (8) U660 (8)
YDSR26RL	2/0 ACSR 2/0 6201 2/0 5005 2/0 AAC	6-1 7 7 7	35.50"	659	—	U659 † (11)	U659 † (11)	U659 † (11)	U659 † (11)
YDSR27RL	3/0 ACSR 3/0 6201 3/0 5005 3/0 AAC	6-1 7 7 7	42.25"	658	—	U658 † (16)	U658 † (16)	U658 † (16)	U658 † (16)
YDSR28RL	4/0 ACSR 4/0 6201 4/0 5005 4/0 AAC	6-1 7 7 7	45.75"	654	—	U654 † (18)	U654 † (18)	U654 † (18)	U654 † (18)
YDSR321RL	336.4 ACSR 336.4 AAC 350.0 AAC	18-1 19 19	45.75"	655	—	U655 † (21)	U655 † (21)	U655 † (21)	U655 † (21)
YDSR341RL	397.5 ACSR 419.6 5005	18-1 19	49.50"	327	—	U327 (18)	U327 (18)	U327 (18)	U327 (18)
YDS361RL	477 (18-1) 556.5 (18-1) 587.2 5005	18-1 18-1 19	23.21"	720 788	—	U-788 † (31)	U-788 † (31)	U-788 † (31)	U-788 † (31)

Blue highlighted items are industry standard and most frequently ordered.

TYPES YDS-A & YDS-AT

HYSPLICE™

ACCOMMODATES: AAC (STR, COMPRESSED, COMPACT)

MATERIAL: ALUMINUM

TENSION RATING:
ANSI C119.4 CLASS 1
(FULL TENSION)

Full-Tension HYSPLICE™ sleeve made of aluminum tubing with staked-in cable stop. Sizes 1/0 and larger tapered for gradual transition of stress. Installed with HYSPLICE™tools and dies.

Pre-filled with PENETROX™ joint compound, stripsealed and capped to limit oxide growth and to increase the life of the connection.

Catalog Number	Conductor	L	Die Index	Tools, Die Set Catalog Number & (Number of Crimps)					
				MD7, MD6	Y35, Y750	Y45	Y46	Y48B	Y60BHU
YDS6WA	6 (1)	3	161	W161 (2)	U161 (1)*	†	‡	—	—
YDS4WA	4 (1)	2-5/8	162	W162 (4)	U162 (1)*	†	‡	—	—
YDS2WA	2 (1)	3-7/8	163	W163 (6)	U163 (2)	†	‡	—	—
YDS6CA	6 (7)	3	161	W161 (2)	U161 (1)*	†	‡	—	—
YDS4CA	4 (7)	2-5/8	162	W162 (4)	U162 (1)*	†	‡	—	—
YDS2CA	2 (7)	3-7/8	163	W163 (6)	U163 (2)	†	‡	—	—
YDS25AT	1/0 (7)	7-1/4	BG 243	BG (12) W243 (6)	BG (6) U243 (3)	†	‡	—	—
YDS26AT	2/0 (7)	9-1/4	245	W245 (9)	U245 (5)	†	‡	—	—
YDS27AT	3/0 (7,19)	7-1/4	247	W247 (8)	U247 (4)	†	‡	C247 (3)	L247 (3)
YDS28AT	4/0 (7, 19)	10-1/2	249	W249 (12)	U249 (6)	†	‡	C249 (3)	L249 (3)
YDS29AT	250 (19)	7-1/2	616	—	U616 (6)	†	‡	—	—
YDS291AT	266.8 (7,19)	8-5/8	251	—	U251 (7)	†	‡	C251 (4)	L251 (4)
YDS301AT	336.4 (19, 37)	9-7/8	321	—	U321 (8)	†	‡	C321 (4)	L321 (4)
YDS31AT	350 (19)	11	490	—	U490 (9)	†	‡	C490 (3)	L490 (3)
YDS311AT	397.5 (19)	12-1/4	468	—	468 (10)	†	‡	—	—
YDS331AT	477 (19)	12-3/4	317	—	U317 (9)	†	‡	C317 (3)	L317 (3)
YDS351AT	556.5 (19, 37)	12-3/4	261	—	U261 (9)	†	‡	C261 (3)	L261 (3)
YDS361AT	636 (37)	13-1/2	469	—	—	S469 (8)	P469 (8)	C469 (4)	L469 (4)
YDS391AT	795 (37), 800 (61)	13-5/8	342	—	—	S342 (8)	P342 (8)	C342 (4)	L342 (4)
YDS431AT	954 (37, 61)	17-5/8	352	—	—	S352 (10)	P352 (10)	C352 (5)	L352 (5)

* Multiple crimp die set; makes more than one crimp per tool compression.
Figure indicates number of compressions.
† U Die with adapter PT-6515.
‡ U Die with adapter PUADP-1.
For faster installations use BURNDY® PATRIOT® family of battery tools.

Blue highlighted items are industry standard and most frequently ordered.

TYPES YDS & YDS-C

HYSPLICE™

ACCOMMODATES: STRANDED COPPER

MATERIAL: COPPER

TENSION RATING:
ANSI C119.4 CLASS 1
(FULL TENSION)

Made of pure copper tubing. Designed to develop the full rated breaking strength of hard drawn or medium hard drawn copper conductor. Installed with standard tooling.

Catalog Number	Stranded Conductor	L	Die Index	Tools, Die Set Catalog Number, & (Crimps per End)			
				MD7, MD6	Y35, Y750, Y45†, Y46‡	Y48B	Y60BHU
YDS6C	6 (7)	2-3/4	161	W161 (2)	U161 (1)*	—	—
YDS4C	4 (7)	2-5/8	162	W162 (4)	U162 (1)*	—	—
YDS3C-3	3 (3)	5-1/4	163	W163 (9)	U163 (3)*	—	—
YDS2C	2 (7)	3-5/8	163	W163 (6)	U163 (2)*	—	—
YDS2C-3	2 (3)	3-5/8	163	W163 (6)	U163 (2)*	—	—
YDS1C	1 (7, 19)	4-1/4	164	W164 (6)	U164 (3)*	—	—
YDS1C-3	1 (3)	6-1/4	459	—	U459 (6)	—	—
YDS25	1/0 (7, 19)	5-3/8	165	W165 (3)	U165 / U205 (6)	—	—
YDS26	2/0 (7, 12, 19)	6	166	W166 (12)	U166 / U459 (6)	—	—
YDS27	3/0 (7, 19)	6-3/4	167	—	U167 / U568 (7)	—	—
YDS28	4/0 (7, 12, 19)	6-7/8	168	—	U168 (9)	C168 (3)	L168 (3)
YDS29	250 (7, 12, 37)	7-1/2	169	—	C169 (9)	C169 (3)	L169 (3)
YDS30	300 (19, 37)	8-1/8	170	—	U170 (13)	C170 (3)	L170 (3)
YDS31	350 (12, 19, 37)	10-1/4	267	—	U267 (12)	C267 (4)	L267 (4)
YDS32	400 (19, 37)	12-3/4	209	—	U209 (15)	C209 (5)	L209 (5)
YDS34	500 (19, 37)	11-5/8	210	—	U210 (15)	C210 (5)	L210 (5)
YDS39	750 (37)	12-3/4	627	—	—	C627 (7)	L627 (7)
YDS44	1000 (61, 37)	15-1/4	345	—	—	C345 (10)	L345 (10)

* Multiple crimp die set; makes more than one crimp per tool compression.
Figure indicates number of compressions.
† U Die with adapter PT-6515.
‡ U Die with adapter PUADP-1.
For faster installations use BURNDY® PATRIOT® family of battery tools.

TYPES YDS-W & YDS

HYSPLICE™

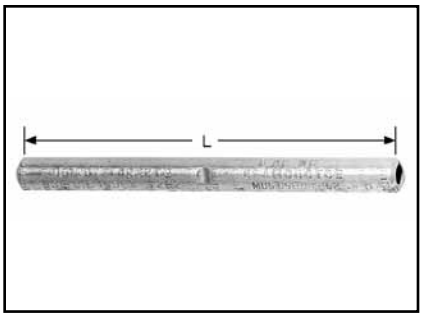

ACCOMMODATES: SOLID COPPER

MATERIAL: COPPER

TENSION RATING:
ANSI C119.4 CLASS 1
(FULL TENSION)

YDS-W is designed to develop full rated breaking strength of hard drawn and medium hard drawn solid copper conductor. Made of pure copper tubing. Installed with standard tooling.

RUS Accepted

Catalog Number	Solid Conductor	L	Die Index	Tools, Die Set Catalog Number, & (Crimps per End)			
				MD7, MD6	Y35, Y750, Y45†, Y46‡	Y48B	Y60BHU
YDS8WG1	8 Sol.	1-7/8	161	W161 (1)	U161 (1)	—	—
YDS8W	8 Sol.	1-1/2	171	W171 (1)	U171 (1)*	—	—
YDS6W	6 Sol.	2-5/8	161	W161 (2)	U161 (1)*	—	—
YDS4W	4 Sol.	2-1/2	162	W162 (4)	U162 (1)*	—	—
YDS3W	3 Sol.	2-7/8	163, 308	W163 (4)	U163 (2)* U308 (2)*	—	—
YDS2W	2 Sol.	3-3/4	163	W163 (6)	U163 (2)*	—	—
YDS1W	1 Sol.	5-7/8	164	W164 (8)	U164 (4)*	—	—
YDS75	1/0 Sol.	6-1/4	165	W165 (6)	U165/U205 (6)	—	—
YDS76	2/0 Sol.	6-5/8	166	W166 (12)	U166/U459 (6)	—	—
YDS78	4/0 Sol.	7-7/8	168	—	U168 (9)	C168 (3)	L168 (3)

* Multiple crimp die set; makes more than one crimp per tool compression.
Figure indicates number of compressions.
† U Die with adapter PT-6515.
‡ U Die with adapter PUADP-1.
For faster installations use BURNDY® PATRIOT® family of battery tools.

TYPES YDS-R SET, YDS-RP1 (Aluminum Sleeve) YDS-RP2 (Steel Sleeve)

HYSPLICE™

ACCOMMODATES: ACSR (STR, COMPRESSED AND COMPACT)

MATERIAL:
ALUMINUM (OUTER SLEEVE), STEEL (INNER SLEEVE)

TENSION RATING:
ANSI C119.4 CLASS 1 (FULL TENSION)

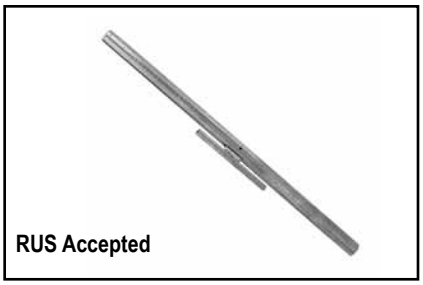

Two-piece, full tension HYSPLICE™, consists of aluminum outer sleeve and steel inner sleeve. Tapered outer sleeve provides gradual transition of stress. Filler holes provided for PENETROX™ joint compound. Sizes 1/0 and larger supplied with plugs for filler hole. Installed with standard HYSPLICE™ tools and dies (thru 556 with Y35 or Y750 HYPRESS™). Aluminum and steel sleeves can be ordered separately or in sets.

* Multiple crimp die set; makes more than one crimp per tool compression.
Figure indicates number of compressions.
† U Die with adapter PT-6515.
‡ U Die with adapter PUADP-1.
For faster installations use BURNDY® PATRIOT® family of battery tools.

Catalog Number			Conductor	L	Die Index	Tools, Die Set Catalog Number, & (Crimps per End)			
Set	Sleeves					MD7, MD6	Y35, Y750, Y45†, Y46‡	Y48B	Y60BHU
YDS021R	Steel Alum.	YDS25RP2 YDS021RP1	2 (7/1) Sparate	4.75" 17.00"	242 241	W242 (8) W241 (10)	U242 (4) U241 (5)	—	—
YDS1R	Steel Alum.	YDS1RP2 YDS1RP1	1 (6/1) Robin	4.13" 16.63"	240 241	W240 (6) W241 (10)	U240 (3) U241 (5)	—	—
YDS25R	Steel Alum.	YDS25RP2 YDS25RP1	1/0 (6/1) Raven	4.75" 17.00"	242 243	W242 (8) W243 (12)	U242 (4) U243 (6)	—	—
YDS26R	Steel Alum.	YDS26RP2 YDS26RP1	2/0 (6/1) Quail	5.25" 19.75"	242 245	W242 (8) W245 (15)	U242 (4) U245 (8)	—	—
YDS27R	Steel Alum.	YDS27RP2 YDS27RP1	3/0 (6/1) Pigeon	5.25" 16.75"	248 247	W246 (16) W247 (12)	U248 (8) U247 (6)	C248 (3)* C247 (4)*	L248 (3)* L247 (4)*
YDS28R	Steel Alum.	YDS28RP2 YDS28RP1	4/0 (6/1) Penquin	5.13" 18.88"	248 249	W248 (14) W249 (14)	W248 (7) W249 (7)	C248 (7)* C249 (4)	L248 (4)* L249 (4)
YDS291R	Steel Alum.	YDS1RP2 YDS291RP1	266.8 (18 - 1)	4-1/8" 19-3/4"	240 251	W240 (6) —	U240 (3) U251 (12)	— C251 (6)	— L251 (6)
YDS30R	Steel Alum.	YDS30RP2 YDS30RP1	266.8 (26/7) Owl 266.8 (26/7) Partridge	6.00" 19.75"	250 251	—	U250 (10) U251 (10)	C250 (3) C251 (5)	L250 (3) L251 (5)
YDS321R	Steel Alum.	YDS25RP2 YDS321RP1	336.4 (18/1) Merlin	4.75" 17.88"	242 490	W242 (8) —	U242 (4) U490 (10)	C242 (2)* C490 (4)	L242 (2)* L490 (4)
YDS32R	Steel Alum.	YDS32RP2 YDS33RP1	336.4 (26/7) Linnet 336.4 (30/7) Oriole	6.88" 22.25"	252 316	—	U252 (9) U316 (9)	C252 (3) C316 (3)	L252 (3) L316 (3)
YDS33R	Steel Alum.	YDS41RP2 YDS33RP1	336.4 (30/7) Oriole	8.63" 22.25"	305 316	—	U305 (9) U316 (9)	C305 (3) C316 (3)	L305 (3) L316 (3)
YDS34R	Steel Alum.	YDS34RP2 YDS35RP1	397.5 (26/7) Ibis 397.5 (30/7) Lark	6.25" 25.63"	253 317	—	U253 (9) U317 (12)	C253 (3) C317 (4)	L253 (3) L317 (4)
YDS35R	Steel Alum.	YDS44RP2 YDS35RP1	397.5 (30/7) Lark	8.00" 25.63"	255 317	—	U255 (12) U317 (12)	C255 (4) C317 (4)	L255 (4) L317 (4)
YDS361R	Steel Alum.	YDS27RP2 YDS361RP1	477.0 (18/1) Pelican	5.25" 25.63"	248 327	W248 (16) —	U248 (8) U327 (16)	C248 (4)* C327 (5)	L248 (4)* L327 (5)
YDS326R	Steel Alum.	YDS34RP2 YDS37RP1	477.0 (24/7) Flicker 477.0 (26/7) Hawk 477.0 (30/7) Hen	6.25" 26.38"	253 261	—	U253 (9) U261 (12)	C253 (3) C261 (4)	L253 (3) L261 (4)
YDS36R	Steel Alum.	YDS36RP2 YDS37RP1	477.0 (26/7) Hawk	7.88" 26.38"	350 261	—	U350 (12) U261 (12)	C350 (4) C261 (4)	L350 (4) L261 (4)

Blue highlighted items are industry standard and most frequently ordered.

TYPES YDS-R SET,
YDS-RP1 (Aluminum Sleeve)
YDS-RP2 (Steel Sleeve)
(Continued)

HYSPLICE™

ACCOMMODATES: ACSR (STR, COMPRESSED AND COMPACT)

MATERIAL:
ALUMINUM (OUTER SLEEVE),
STEEL (INNER SLEEVE)

TENSION RATING:
ANSI C119.4 CLASS 1
(FULL TENSION)

RUS Accepted

Catalog Number			Conductor	L	Die Index	Tools, Die Set Catalog Number, & (Crimps per End)				
Set	Sleeves					Y35, Y750,	Y45	Y46	Y48B	Y60BHU
YDS392R	Steel Alum.	YDS41RP2 YDS39RP1	556.5 (24-7)	8-5/8 26-1/8	305 608	U305 (9) U608 (15)	† †	‡ ‡	C305 (3) C608 (5)	L305 (3) L608 (5)
YDS40R	Steel Alum.	YDS44RP2 YDS39RP1	556.5 (26-7)	8 26-1/8	255 608	U255 (12) U608 (15)	† †	‡ ‡	C255 (4) C608 (5)	L255 (4) L608 (5)
YDS42R	Steel Alum.	YDS43RP2 YDS43RP1	636 (24-7)	8 32-1/2	254 319	— —	S254 (15) S319 (18)	P254 (15) P319 (18)	C254 (5) C319 (6)	L254 (5) L319 (6)
YDS43R45RS	Steel Alum.	YDS45RP2 YDS43RP1	636 (26-7)	9 32-1/2	320 319	— —	S320 (15) S319 (18)	P320 (15) P319 (18)	C320 (5) C319 (6)	L320 (5) L319 (6)
YDS43R43RS	Steel Alum.	YDS43RP2 YDS43RP1	666.6 (24-7)	8 32-1/2	254 319	— —	S254 (15) S319 (18)	P254 (15) P319 (18)	C254 (5) C319 (6)	L254 (5) L319 (6)
YDS451R49RS	Steel Alum.	YDS49RP2 YDS451RP1	795 (26-7)	10 32-1/2	419 579	— —	S419 (21) S579 (13)	P419 (21) P579 (13)	C419 (7) C579 (6)	L419 (7) L579 (6)
YDS45R45RS	Steel Alum.	YDS45RP2 YDS45RP1	795 (54-7)	9 32-1/2	320 352	— —	S320 (15) S352 (12)	P320 (15) P352 (12)	C320 (5) C352 (6)	L320 (5) L352 (6)
YDS451R34RS	Steel Alum.	YDS34RP2 YDS451RP1	900 (45-7)	6-1/4 32-1/2	253 579	U253 (9) —	† S579	‡ P579	C253 (3) C579 (6)	L253 (3) L579 (6)
YDS49R	Steel Alum.	YDS49RP2 YDS49RP1	1033.5 (54-7)	10 37	419 422	— —	— —	— —	C419 (7) —	L419 (7) L422 (8)
YDS50R	Steel Alum.	YDS36RP2 YDS49RP1	1113 (45-7)	7-7/8 37	350 422	U350 (12) —	† —	‡ —	C350 (4) —	L350 (4) L422 (8)

† U Die with adapter PT-6515.
‡ U Die with adapter PUADP-1.
For faster installations use BURNDY® PATRIOT® family of battery tools.

FOR ACSR "STATIC" WIRE

Catalog Number			Conductor	L	Die Index	Tools, Die Set Catalog Number, & (Crimps per End)			
Set	Sleeves					MD7, MD6	Y35, Y750, Y45†, Y46‡	Y48B	Y60BHU
YDS011R	Steel Alum.	YDS27RP2 YDS011RP1	80 (8/1)	5-1/4 19-3/4	248 245	W248 (16) W245 (12)	U248 (8) U245 (6)	— —	— —
YDS251R	Steel Alum.	YDS34RP2 YDS251RP1	101.8 (12/7)	6-1/4 22-1/4	253 316	— —	U253 (9) U316 (9)	C253 (3) C316 93)	L253 (3) L316 (3)
YDS261R	Steel Alum.	YDS41RP2 YDS261RP1	134.6 (12/7)	8-5/8 22-1/4	305 316	— —	U305 (9) U316 (9)	C305 (3) C316 (3)	L305 (3) L316 (3)
YDS271R	Steel Alum.	YDS44RP2 YDS271RP1	159 (12/7)	8 25-5/8	255 317	— —	U255 (12) U317 (12)	C255 (4) C317 (4)	L255 (4) L317 (4)

† U Die with adapter PT-6515.
‡ U Die with adapter PUADP-1.

Blue highlighted items are industry standard and most frequently ordered.

TYPE YDS-RLY

UNISPLICE™

ACCOMMODATES: AAC (STR, COMPRESSED), ACSR AND AAAC

MATERIAL: ALUMINUM

TENSION RATING:
ANSI C119.4 CLASS 1
(FULL TENSION)

RUS Accepted

Single sleeve splice similar to UNISPLICE™ type YDS-RL, except designed to eliminate possible conductor basketing on ACSR. Installed by crimping from end of connector towards center with standard tooling. Supplied pre-filled with PENETROX™ joint compound, stripsealed and capped to limit oxide growth and to increase the life of the connection. Factory installed tape on pressure relief holes must be in place when conductors are inserted.

* Multiple crimp die set; makes more than one crimp per tool compression. Figure indicates number of compressions.
** MD6 NON-BOW Dies produce straight sleeves without rotating tool.
‡ U Die with adapter PUADP-1.
† U Die with adapter PT-6515.
††† Accommodates ACSR with aluminized steel core.
For faster installations use BURNDY® PATRIOT® family of battery tools.

Catalog Number	Conductor †††	L	Die Index	Tools, Die Set Catalog Number, & (Crimps per End)			
				MD7, MD6	Y35, Y750, Y45†, Y46‡	Y48B	Y60BHU
YDS4RLY	4ACSR (7-1) 4ACSR (6-1) 4 6201 (7) 4 5005 (7) 4AAC (7)	12-1/2	BG, or 243, or 687	BG (20) W-BG (10)* W687 (10)**	U-BG (8)* U243 (6)	C243 (3)	L243 (3)
YDS2RLY	2ACSR (6-1) 2 6201 (7) 2 5005 (7) 2AAC (7)	12-3/8	BG, or 243, or 687	BG (20) W-BG (10)* W687 (10)**	U-BG (8)* U243 (6)	C243 (3)	L243 (3)
YDS021RLY	2ACSR (7-1) 2ACSR (6-1) 2 6201 (7) 2AAC (7)	14-3/8	C, or 167, or 247, or 702	W-C (24) W702 (11)**	U167 (12) U247 (6)	C167 (6)	C167 (6)
YDS25RLY	1/0 ACSR (6-1) 1/0 6201 (7) 1/0 5005 (7) 1/0 AAC (7)	17	C, or 167, or 247, or 660, or 702	W-C (30) W660 (16) W702 (13)**	U660 (8) U167 (16) U247 (8)	C167 (5)	C167 (5)
YDS26RLY	2/0 ACSR (6-1) 2/0 6201 (7) 2/0 5005 (7) 2/0 AAC (7)	15	659	—	U659 Crimps Overlap	—	—
YDS27RLY	3/0 ACSR (6-1) 3/0 6201 (7) 3/0 5005 (7) 3/0 AAC (7)	21	658	—	U658 Crimps Overlap	—	—
YDS28RLY	4/0 ACSR (6-1) 4/0 6201 (7) 4/0 5005 (7) 4/0 AAC (7)	21	654	—	U654 Crimps Overlap	—	—
YDS321RLY	336.4 ACSR (18-1) 336.4 AAC (19)	20-1/2	655	—	U655 Crimps Overlap	—	—

Blue highlighted items are industry standard and most frequently ordered.

TYPES YDS-RL & YDS-LT

UNISPLICE™

ACCOMMODATES: AAC (STR, COMPRESSED), ACSR AND AAAC

MATERIAL: ALUMINUM

TENSION RATING:
ANSI C119.4 CLASS 1
(FULL TENSION)

Single-sleeve aluminum UNISPLICE™ designed to splice ACSR as simply as all aluminum. Pre-filled with PENETROX™ joint compound, stripsealed and capped to limit oxide growth and to increase the life of the connection. Eliminates strand stripping, installing separate steel sleeve and filling with joint compound. Ends ACSR joint failure due to faulty positioning of sleeve and lack of joint compound. Simplifies hot-line splicing. Electrical and mechanical performance equal to two-piece sleeves.

Catalog Number	Conductor †††	L	Die Index	Tools, Die Set Catalog Number, & (Crimps per End)			
				MD7, MD6	Y35, Y750, Y45†, Y46‡	Y48B	Y60BHU
YDS4RL	4 ACSR (7-1) 4 ACSR (6-1) 4 6201 (7) 4 5005 (7) 4 AAC (7)	11-7/8	BG, or 243, or 687	BG (24) W-BG (11)* W243 (9) W687 (11)**	U-BG (9)* U243 (6)	C243 (3)	L243 (3)
YDS2RL	2 ACSR (6-1) (7-1) 2 6201 (7) 2 5005 (7) 2 AAC (7)	10-1/4	BG, or 243, or 687	BG (20) W-BG (10)* W243 (10) W687 (10)**	U-BG (8)* U243 (5)	C243 (3)	L243 (3)
YDS021RL	2 ACSR (7-1) 2 ACSR (6-1) 2 6201 (7) 2 AAC (7)	11-1/4	C, or 167, or 247, or 702	W-C (30) W247 (14) W702 (11)**	U167/U568 (16) U247 (7)	C167 (7)	C167 (7)
YDS25RL	1/0 ACSR (6-1) 1/0 6201 (7) 1/0 5005 (7) 1/0 AAC (7)	13-7/8	C, or 167, or 247, or 660, or 702	W-C (32) W660 (16) W702 (14)**	U167/U568 (15) 660 (8) U247 (8)	C167 (5)	C167 (5)
YDS26RL	2/0 ACSR (6-1) 2/0 6201 (7) 2/0 5005 (7) 2/0 AAC (7)	13-1/2	659	—	U659 (11) Crimps Overlap	—	—
YDS27RL	3/0 ACSR (6-1) 3/0 6201 (7) 3/0 5005 (7) 3/0 AAC (7)	18-1/4	658	—	U658 (16) Crimps Overlap	—	—
YDS28RL	4/0 ACSR (6-1) 4/0 6201 (7) 4/0 5005 (7) 4/0 AAC (7)	18-1/4	654	—	U654 (18) Crimps Overlap	—	—
YDS321RL	336.4 ACSR (18-1) 336.4 AAC (19) 350 AAC	18-1/4	655	—	U655 (21) Crimps Overlap	—	—

* Multiple crimp die set; makes more than one crimp per tool compression. Figure indicates number of compressions.
** MD6 NON-BOW Dies produce straight sleeves without rotating tool.

‡ U Die with adapter PUADP-1.
† U Die with adapter PT-6515.
†† Accommodates compact conductor.
††† Accommodates ACSR with aluminized steel core.

For faster installations use BURNDY® PATRIOT® family of battery tools.

Blue highlighted items are industry standard and most frequently ordered.

TYPES YDS-RL & YDS-LT

(Continued)

UNISPLICE™

ACCOMMODATES: AAC (STR, COMPRESSED), ACSR AND AAAC

MATERIAL: ALUMINUM

TENSION RATING:
ANSI C119.4 CLASS 1
(FULL TENSION)

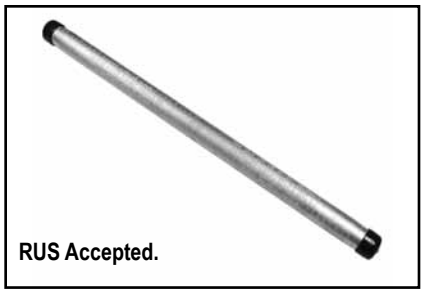

RUS Accepted.

Single-sleeve aluminum UNISPLICE™ designed to splice ACSR as simply as all aluminum. Pre-filled with PENETROX™ joint compound, stripsealed and capped to limit oxide growth and to increase the life of the connection. Eliminates strand stripping, installing separate steel sleeve and filling with joint compound. Ends ACSR joint failure due to faulty positioning of sleeve and lack of joint compound. Simplifies hot-line splicing. Electrical and mechanical performance equal to two-piece sleeves.

Catalog Number	Conductor	Code	L	Die Index	Tools, Die Set Catalog Number, & (Crimps per End)		
					Y35, Y750, Y45†, Y46‡	Y48B	Y60BHU
YDS30LT	312.8 6201	BUTTE	—	317	U317	C317	L317
YDS32LT	394.5 6201 394.5 5005 (336.4 E.C. Equiv.)	CANTON RADIAN	14-1/2	642	U642 (12)	C642 (4)	L642 (4)
YDS341RL	397.5 ACSR (18-1) 419.6 5005	REDE	22	327	U327 (18)	—	—
YDS361RL	477 (18-1) 556.5 (18-1) 587.2 5005	RUBLE	23-1/4	720 788	U-788 (31) Crimps Overlap	—	L720 Crimps Overlap
YDS36LT	559.5 6201 559.5 5005 (477 E.C. Equiv.)	DARIEN REMEX	16	667	P667**	C667 Crimps Overlap	L667 Crimps Overlap

** Y46 HYPRESS™ only.

For faster installations use BURNDY® PATRIOT® family of battery tools.

TYPES YDS-A & YDS-AT

HYSPLICE™

ACCOMMODATES: AAC (STR, COMPRESSED, COMPACT)

MATERIAL: ALUMINUM

TENSION RATING:
ANSI C119.4 CLASS 1
(FULL TENSION)

INSTALLED WITH BURNDY OR EEI DIES

Full-Tension HYSPLICE™ sleeve made of aluminum tubing with staked-in cable stop. Sizes 1/0 and larger tapered for gradual transition of stress. Installed with HYSPLICE™ tools and dies. Pre-filled with PENETROX™ joint compound, stripsealed and capped to limit oxide growth and to increase the life of the connection.

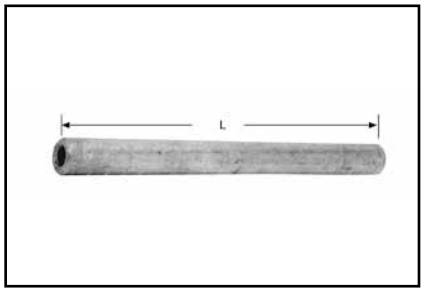

Catalog Number	Conductor	L	EEI Die Index	Index	Tools, Die Set Catalog Number (Crimps per End)	
					MD7, MD6	Y35, Y750, Y45†, Y46‡
YDS2CA	2 (7)	3-7/8	6A	693	W693 (8)	U693 (2)
YDS25AT	1/0 (7)	7-1/4	8A	243	W243(6)	U243(3)
YDS27AT	3/0 (7,19)	7-1/4	10A	694	W694 (8)	U694 (4)
YDS28AT	4/0 (7, 19)	10-1/2	11A	249	W249 (12)	U249 (6)
YDS311AT	397.5 (19)	12-1/4	13A	655	—	U655 (10)
YDS331AT	477 (19)	12-3/4	14A	317	—	U317 (9)

† U Die with adapter PT-6515.
‡ U Die with adapter PUADP-1.

For faster installations use BURNDY® PATRIOT® family of battery tools.

Blue highlighted items are industry standard and most frequently ordered.

TYPES YDS-R & YDS- RE

HYSPLICE™

ACCOMMODATES: ACSR

MATERIAL:
ALUMINUM (OUTER SPLICE),
STEEL (INNER SPLICE)

TENSION RATING:
ANSI C119.4 CLASS 1
(FULL TENSION)

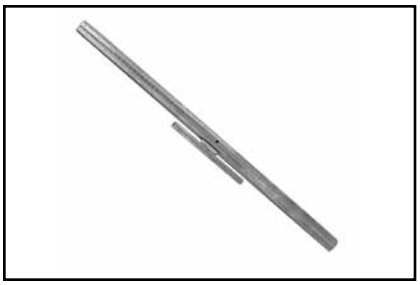

Two-piece, full-tension HYSPLICE™, made of aluminum outer sleeve and steel sleeve for steel core. Designed to be installed with BURNDY® EEI dies. BURNDY® and EEI die index numbers are clearly marked on the sleeve.

Catalog Number Aluminum & Steel Sleeve Set	Catalog Number Aluminum Sleeve	Conductor	Aluminum Outer Sleeve					Catalog Number Steel Sleeve	Steel Inner Sleeve				
			L	EEI Die #	Die Index	Tools, Die Set Catalog No., & (Crimps per End)			LL	EEI Die #	Die Index	Tools, Die Set Catalog No., & (Crimps per End)	
						MD6	Y35, Y750, Y45†, Y46‡					MD6	Y35, Y750, Y45†, Y46‡
YDS2RE	YDS021REP1	2 (6-1)	17-1/8	6A	693	W693 (20)	U693 (5)	YDS2REP2	4-1/8	1S	690	W690 (8)	U690 (4)
YDS021RE	—	2 (7-1)						YDS25REP2	4-3/4	2S	691	W691 (9)	U691 (3)
—	YDS25RP1	1/0 (6-1)		8A	243	W243 (10)	U243 (5)						
—	YDS26RP1	2/0 (6-1)	19-3/4	9A	245	W245 (12)	U245 (6)	—	5-1/4	4S	692	W692 (12)	U692 (6)
YDS27RE	YDS27RP1	3/0 (6-1)	16-3/4	10A	694	W694 (12)	U694 (6)	YDS27RP2	5-1/4	5S	248	W248 (8)	U248 (8)
YDS28RE	YDS28RP1	4/0 (6-1)	18-7/8	11A	249	W249 (14)	U249 (7)	YD28REP2	5-1/4	5S	248	W248 (8)	U248 (8)
—	—	336.4 (18-1)	17-7/8	13A	655		U655 (9)	YDS25REP2	4-3/4	2S	691	W691 (9)	U691 (3)
YDS361R	YDS361RP1	477 (18-1)	25-1/2	14A	327	W327	U327 (16)	YDS27RP2	5-1/4	5S	248	W248 (8)	U248 (3)

† U Die with adapter PT-6515.
‡ U Die with adapter PUADP-1.

For faster installations use BURNDY® PATRIOT® family of battery tools.

TYPES YDS-E, YDS-H, YDS-U

HYSPLICE™

ACCOMMODATES: STEEL

MATERIAL: STEEL

TENSION RATING:
ANSI C119.4 CLASS 1
(FULL TENSION)

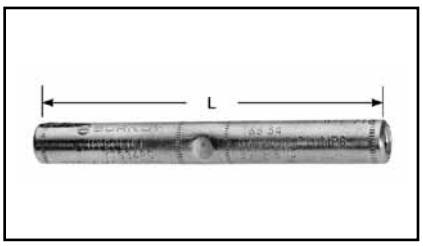

Full-tension HYSPLICE™ sleeves designed for HS, EHS, Utilities (UT) or Siemens-Martin (SM) galvanized steel guy, messenger, and "Static" conductors. Made of hot-dip galvanized seamless milled steel tubing lined with silicone carbide particles.

Catalog Number	Conductor			L	Die Index	Tools, Die Set Catalog Number, & (Crimps per End)		
	Size	Str.	Grade			Y35, Y750, Y45†, Y46‡	Y48B	Y60BHU
YDS250E	1/4	7	EHS	6-3/4	609	U609 (10)	—	—
YDS312H	5/16	7	HS	10-5/8	257	U257 (20)	C257 (5)*	L257 (5)*
YDS312E	5/16	7	EHS	8-1/2	305	U305 (6)	C305 (3)	L305 (3)
YDS375H	3/8	7	HS, UT	9	304	U304 (12)	C304 (4)	L304 (4)
YDS500H	1/2	7	HS	9-5/8	293	—	C293 (6)	L293 (6)

* Multiple crimp die set; makes more than one crimp per tool compression. Figure indicates number of compressions.

† U Die with adapter PT-6515.
‡ U Die with adapter PUADP-1.

For faster installations use BURNDY® PATRIOT® family of battery tools.

Blue highlighted items are industry standard and most frequently ordered.

TYPE YDS-K

HYSPLICE™

ACCOMMODATES: COPPERWELD

MATERIAL: COPPER

TENSION RATING:
ANSI C119.4 CLASS 1
(FULL TENSION)

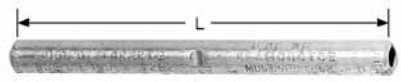

Full-tension HYSPLICE™ designed to exceed the minimum rated breaking strength of 30% conductivity extra high strength Copperweld and lower strength conductors. Made of pure copper tubing. Installed with HYSPLICE™ tools and dies.

Catalog Number	Conductor	L	Die Index	Tools, Die Set Catalog Number, & (Crimps per End)			
				MD7, MD6	Y35, Y750, Y45†, Y46‡	Y48B	Y60BHU
YDS8WK	8 Sol.	3-3/4	285, or 162	W162 (6)	U285 (2)	—	—
YDS6WK	6 Sol.	4-3/8	276, or 162	W162 (6)	U276 (6)	—	—
YDS3K10	(3 #10)	4-7/8	403	—	U403 (3)*	—	—
YDS3K8	(3 #8)	5-5/8	205	—	U205 (5)	—	—
YDS3K7	5/16 (7 #10) (3 #7)	10	167	—	U167/U568 (10)	C167 (4)	L167 (4)
YDS3K6	11/32 (7#9) (3#6)	9-1/2	331	—	U331 (9)	C331 (3)	L331 (3)
YDS3K5	3/8 (7 #8) (3 #5)	6-7/8	259	—	U259 (6)	C259 (2)	L259 (2)
YDS7K7	7/16 (7 #7)	6-7/8	328	—	—	C328 (3)	L328 (3)
YDS7K6	1/2 (7 #6)	9-3/8	260	—	—	C260 (4)	L260 (4)
YDS7K5	9/16 (7 #5)	11-3/8	344	—	—	C344 (6)	L344 (6)

* Multiple crimp die set; makes more than one crimp per tool compression. Figure indicates number of compressions.

† U Die with adapter PT-6515.
‡ U Die with adapter PUADP-1.

For faster installations use BURNDY® PATRIOT® family of battery tools.

TYPE YTS-E

ACCOMMODATES: EHS STEEL

MATERIAL: ALUMINUM

TENSION RATING:
ANSI C119.4 CLASS 1
(FULL TENSION)

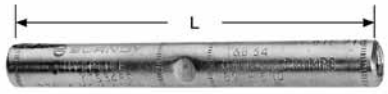

RUS Accepted

Full tension splice for EHS steel guy, messenger or "static" cable. Sleeve is prefilled with PENETROX™ joint compound, stripsealed and capped to limit oxide growth and to increase the life of the connection.

Catalog Number	Conductor †	L	Tools, Die Sets	
	EHS Steel		Die Index	Y60BHU*
YTS375E	3/8" 7 Str.	10-3/8	723	L723
YTS438E	7/16" 7 Str.	11-7/8	726	L726

* Overlap crimps.
† Sleeve is high strength aluminum alloy for optimum corrosion resistance.

For faster installations use BURNDY® PATRIOT® family of battery tools.

Blue highlighted items are industry standard and most frequently ordered.

TYPES YDS-KT & YDS-F

HYSPLICE™

ACCOMMODATES: COPPERWELD - COPPER

MATERIAL: COPPER

TENSION RATING:
ANSI C119.4 CLASS 1
(FULL TENSION)

RUS Accepted

Full-tension HYSPLICE™ made of pure copper tubing. Type YDS-KT is tapered to provide gradual transition of stress on Type "A" conductor. HYSPLICE™ Type YDS-F is recommended for Type "F" conductor.

Catalog Number	Conductor	L	Die Index	Tools, Die Set Catalog Number, & (Crimps per End)			
				MD7, MD6	Y35, Y750, Y45†, Y46‡	Y48B	Y60BHU
YDS8KT	8A	5	162 or 202	W162 (4)	U202 (4)*	—	—
YDS6KT	6A	6-1/8	162 or 203	W162 (5)	U203 (5)*	—	—
YDS4KT	4A	6-3/8	163 or 204	W163 (5)	U204 (10)	—	—
YDS2KT	2A	7-3/4	205	—	U205	—	—
YDS3K6	11/32 (7#9) (3#6)	9-1/2	331	—	U331 (9)	C331 (3)	L331 (3)
YDS2F	2F	6-1/4	329	—	U329 (4)	—	—
YDS25F	1/0F	8-3/4	568	—	U167/U568 (8)	—	—
YDS26F	2/0F	9-5/8	552	—	U552 (11)	—	—
YDS28F	4/0F	11-7/8	331	—	U331 (12)	C331 (4)	L331(4)

* Multiple crimp die set; makes more than one crimp per tool compression. Figure indicates number of compressions.

† U Die with adapter PT-6515.
‡ U Die with adapter PUADP-1.

For faster installations use BURNDY® PATRIOT® family of battery tools.

TYPE YDS-M-T

ACCOMMODATES: ALUMOWELD

MATERIAL: ALUMINUM

TENSION RATING:
ANSI C119.4 CLASS 1
(FULL TENSION)

RUS Accepted

Full-tension splice for Alumoweld trans-mission lines. Five connectors accommodate eight conductor sizes. Sleeve is pre-filled with PENETROX™ joint compound and capped.

Catalog ††† Number	Conductor	L	Tools, Die Sets		
	ALUMOWELD		Die Index	Y35, Y750, Y45†, Y46‡	Y60BHU
YDS7M10T	7 #10, 3 #7	10	676 or 721	U676 (8)	L721
YDS7M9T	7 #9, 3 #6	10-3/8	677	U677 (10)	—
YDS7M8T	7 #8, 3 #5	12-1/4	668 or 723	U668 (13)	L723
YDS7M7T	7 #7	14-1/2	678 or 726	U678 (19)	L726
YDS7M6T	7 #6	15-1/8	679 or 726	U679 (2)	L726

* Overlap crimps.
† U Die with adapter PT-6515.
‡ U Die with adapter PUADP-1.

††† Sleeve is high strength aluminum alloy for optimum corrosion resistance.

For faster installations use BURNDY® PATRIOT® family of battery tools.

Blue highlighted items are industry standard and most frequently ordered.

DEADEND FITTING AND ACCESSORIES

TABLE OF CONTENTS

LOOP

Type **UP-R** H-68

Type **BC** H-69

Type **M** H-69

PRIMARY AND STRAIN BUS

Type **CUW-E** H-70

Type **DUW** H-70

Type **CUW-A-E & CUW-R-E** H-71

Type **DUW-A & DUW-A-E** H-71

Blue highlighted items are industry standard and most frequently ordered.

DEADEND FITTINGS AND ACCESSORIES

The deadend method selected for any particular application will depend upon the nature of the application, the size of the conductor, holding strength required, and preference for mechanical or compression devices.

Secondaries are commonly deadended by bending wire around a spool insulator and snubbing with the same connectors used for the secondary to service drop connection. On copper conductor, connectors such as Ubolt Clip BC, SERVIT™ KS, OKLIP™ KVS or CRIMPIT™ YC-C are recommended. These connectors provide high holding strength without damaging conductor strands. On aluminum wires, CLIPIT™ UW-R, mechanical connector is recommended.

The same methods can also be used on primaries. However, the straight line clamp Type CUW-A-E is more popular for this application. They are easier to install on either hot or de-energized lines. They are particularly well suited to hot-line maintenance, and allow easy re-sagging of conductors.

Straight line types are also popular for deadending strain buses. These are normally large, hard to handle conductors that do not lend themselves to snub or "quadrant" types. Types DUW or CUW-E are recommended for copper conductor and DUW-A and DUW-AE for aluminum and ACSR. The pulling eye on the DUW-A-E is in line with the cable to make installation easier.

TYPE UP-R

HEAVY DUTY PARALLEL CLAMP

ACCOMMODATES:
AAC (STR, COMPRESSED, COMPACT†), ACSR†, AAAC AND COPPER

MATERIAL: ALUMINUM

RUS Accepted

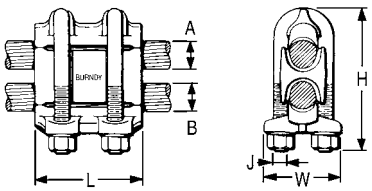

Heavy duty aluminum connector for feeder, subtransmission and primary distribution. Massive design and large spacer give maximum protection against galvanic action and overload conditions. Spacing of U-bolts, tapered bell mouths and modified V groove minimize cold flow, eliminate cable damage, and produce wiping action on conductors. Spacer taps confine cable strands to prevent splaying. Captured, heat treated aluminum alloy U-bolts. PENETROX™ joint compound recommended for all combinations.

Catalog Number	Groove A		Groove B		Dimensions			
	ACSR †, 6201, 5005	Copper or Aluminum †	ACSR †, 6201, 5005	Copper or Aluminum †	H	J	L	W
UP34R	110.8 (12-7) - 397.5 (18-1)	3/0 Str. - 400	110.8 (12.7) - 397.5 (18-1)	3/0 Str. - 400	4-5/8	1/2-13	4	2-5/8
UP45R36R	336.4 (30-7) - 795 (30-19)	397.5 - 954	110.8 (12-7) - 447 (18-1)	3/0 Str. - 500	5-1/4	1/2-13	4	2-7/8
UP45R	336.4 (30-7) - 795 (30-19)	397.5 - 954	336.4 (30-7) - 795 (30-19)	397.5 - 954	6-1/4	5/8-11	4-1/2	3-1/4

† Accommodates compact and compressed conductors within diameter range.
To ensure proper tightening torque use BURNDY® BTW torque wrenches.

TYPE BC

CLIP

Deadend Clamp for Guy Wire

Deadend CLIP with DURIUM™ silicone bronze U-bolt, nuts, and washers. Saddle made of high strength corrosion resistant copper alloy.

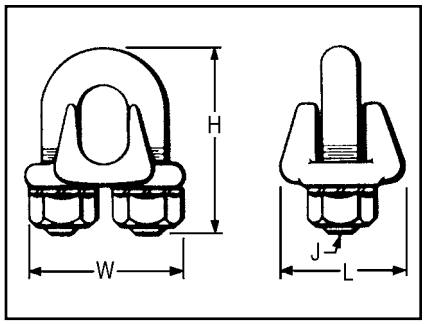

Catalog Number	Copper	Guy Wire	Dimensions			
			H	J	L	W
BC2C	2 Sol.	5/16	2	3/8	1-1/4	1-3/4
BC25	1/0 Str.	3/8			1-3/8	
BC28	2/0 Str. - 4/0 Str.	1/2	2-3/8	1/2	1-3/4	2-1/4

TYPE M

DEADEND THIMBLE

Deadend Copper Conductor or Guy Wire

High strength corrosion resistant copper alloy thimble groove to fit any size guy wire used for deadending. Generous radius prevents kinking or overstressing outer strands of wire.

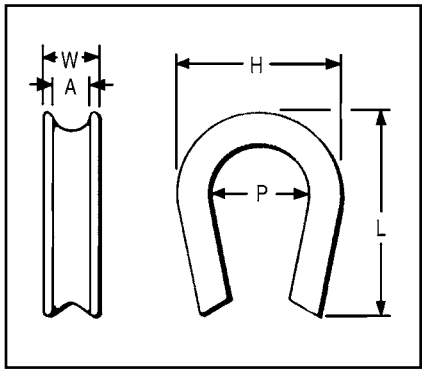

Catalog Number	Groove Size A	Dimensions			
		H	L	P	W
M20	5/16	1-5/8	1-7/8	7/8	5/8
M30	3/8	1-7/8	2-1/8	1	
M40	7/16	1-3/4	2-5/8	1-1/8	
M50	1/2	1-7/8	2-1/4		
M60	5/8	2-1/4	2-5/8	1-3/8	7/8
M70	3/4	2-5/8	3-1/4	1-1/2	1
M80	7/8	3	3-3/8	1-3/4	1-1/4
M90	1	3-3/8	3-3/4	2	1-3/8

Blue highlighted items are industry standard and most frequently ordered.

TYPE CUW-E

DEADEND CLAMP

ACCOMMODATES: COPPER

MATERIAL: COPPER

High strength, two-bolt, cast copper alloy strain clamp with single saddle designed for short span distribution and strain bus application. Galvanized steel clevis pin, and U-bolts.

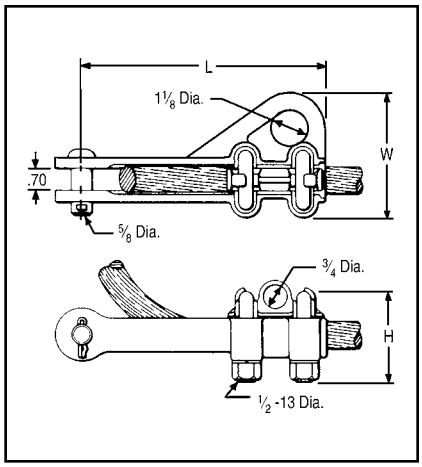

Catalog Number	Conductor Range	Dimensions		
		H	L	W
CUW34-E	4/0 Str. - 500	3	7-3/8	4
CUW44-E	500 - 1000	3-3/8	8-3/4	4-1/2

To ensure proper tightening torque use BURNDY® BTW torque wrenches.

TYPE DUW

DEADEND CLAMP

ACCOMMODATES: COPPER

MATERIAL: COPPER

High strength corrosion resistant copper alloy strain clamp with three DURIUM™ U-bolts and single serrated saddle. Galvanized steel clevis pin.

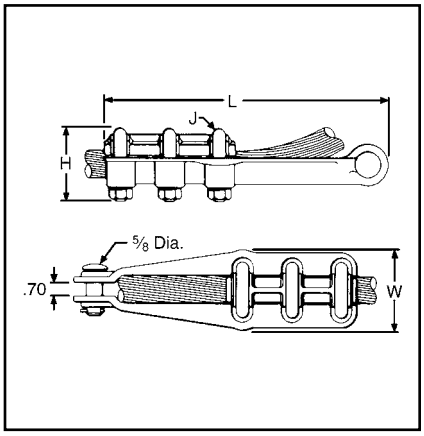

Catalog Number	Conductor	Dimensions			
		H	J	L	W
DUW28	1 Str. - 4/0 Str.	2-1/2	3/8	9-7/8	2-1/4
DUW31	4/0 Str. - 350	2			2-3/8
DUW34	350-500	2-5/8	1/2		2-3/4
DUW44	500-1000	2-7/8		11-3/8	3-1/4

To ensure proper tightening torque use BURNDY® BTW torque wrenches.

TYPES CUW-A-E & CUW-R-E

DEADEND CLAMP

ACCOMMODATES:
AAC (STR, COMPRESSED†), ACSR† AND AAAC

MATERIAL: ALUMINUM

RUS Accepted

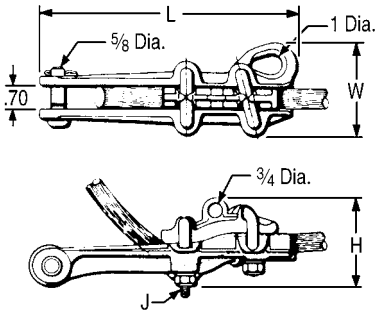

High strength aluminum clamp for deadending primary distribution lines. Straight-line design, with hot stick lifting-eye, pulling-eye, and captured, angled U-bolts, facilitates installation and maintenance, especially on hot-line work. Snub-pocket V-shaped, range-taking conductor groove and galvanized steel U-bolts provide high holding strength.

Catalog Number	Aluminum †	ACSR †, 6201, 5005	Dimensions			
			H	J	L	W
CUW26RE-1	2 Str. - 2/0 (19)	4 - 2/0	3	3/8-16	8	3
CUW30A-E	1/0 (7) - 300	1/0 - 266.8 (18-1)	3-5/8	1/2-13	10	3-1/2
CUW32R-E	3/0 (7) - 350	3/0 - 336.4 (26-7)	4	1/2-13	10	3-5/8
CUW361R-E	4/0 - 500	4/0 - 477 (18-1)	4-1/8	1/2-13	11	3-5/8
CUW391A-E	336.4 - 795	300 (26-7) 636 (26-7)	4-7/8	1/2-13	11	4-1/8

† Accommodates compressed conductors within diameter range.
To ensure proper tightening torque use BURNDY® BTW torque wrenches.

TYPES DUW-A & DUW-A-E

DEADEND CLAMP

ACCOMMODATES:
AAC (STR, COMPRESSED†), ACSR† AND AAAC

MATERIAL: ALUMINUM

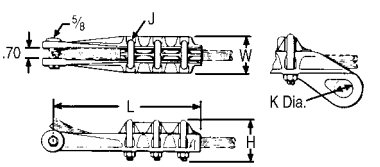

High strength cast aluminum alloy clamp recommended for strain bus applications. Three galvanized steel U-bolts, single saddle and headed clevis pin provide high holding strength. Type DUW-A-E has pulling-eye in line with conductor for easier installation.

Catalog Number		Conductor		Dimensions				
Without Pulling Eye	With Pulling Eye	Aluminum †	ACSR †, 6201, 5005	H	J	K	L	W
DUW28A	—	1 - 4/0	2 (7-1) - 4/0	2	3/8	0.88	9-1/2	2-1/4
DUW44A	**DUW44A-E**	500-1000	397.5 (30.7) - 900 (54-7)	3-3/8	1/2	1.25	11-1/4	3-5/8

† Accommodates compressed conductors within diameter range.
To ensure proper tightening torque use BURNDY® BTW torque wrenches.

Blue highlighted items are industry standard and most frequently ordered.

COMPRESSION TERMINALS AND ACCESSORIES

TABLE OF CONTENTS

Types **YCA-2N & YCAB-4N**	**H-73**
Type **YCA-RL-2N**	**H-74**
Types **YCA-R-N & YCAK-R-N**	**H-75 - H-76**
Type **YAK-A-2G**	**H-77**
Types **YCAK-A & YRA**	**H-78**

Blue highlighted items are industry standard and most frequently ordered.

COMPRESSION TERMINALS & ACCESSORIES

Compression terminals are used to make convenient and reliable connections to switch pads, transformers, and other electrical equipment. They accommodate either copper, aluminum, ACSR, ACAR, Alumoweld, or steel conductor and come with one, two or four hole NEMA drilled pads to match the equipment drilling. Standard copper and aluminum terminals are also listed in the compression section C.

TYPES YCA-2N & YCAB-4N

HYLUG™

ACCOMMODATES: COPPER

MATERIAL: COPPER

Compression HYLUG™ terminals designed for terminating copper conductors to switch pads and other substation or switch yard apparatus. NEMA standard mounting holes. Made of pure copper. Installed with same die as equivalent full-tension jumper loop and repair sleeves.

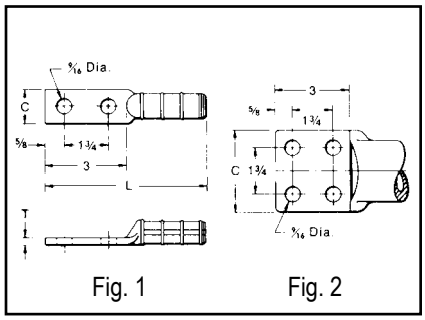

Fig. 1 Fig. 2

Catalog Number	Conductor	Fig. No.	C	L	T	Die Index	Tools, Die Set Catalog Number, & (Number of Crimps)			
							MD7, MD6	Y35, Y750, Y45†, Y46‡	Y48B	Y60BHU
YCA25-2N	1/0 (7, 19)	1	7/8	5-3/8	1/8	165	W165 (3)	U165/U205 (3)	—	—
YCA26-2N	2/0 (7, 19, 37)		1	5-1/4	1/4	166	W166 (6)	U166/U459 (3)	—	—
YCA27-2N	3/0 (7, 19)		1-1/8	5-3/8		167	—	U167/U568 (3)	C167 (1)	L167 (1)
YCA28-2N	4/0 (7, 12, 19)		1-1/4		3/8	168	—	U168 (3)	C168 (1)	L168 (1)
YCAB28-4N	4/0 (7, 12, 19)	2	3	5-5/8			—			
YCA29-2N	250 (7, 19, 37)	1	1-3/8			169	—	U169 (4)	C169 (1)	L169 (1)
YCA30-2N	300 (19, 37)		1-1/2	5-1/2		170	—	U170 (5)	C170 (1)	L170 (1)
YCA31-2N	350 (12, 19, 37)		1-5/8	6-1/2	1/2	267	—	U267 (6)	C267 (2)	L267 (2)
YCA32-2N	400 (19, 37)			6-3/4		209	—	U209 (6)	C209 (2)	L209 (2)
YCAB32-4N	400 (19, 37)	2	3	7-1/8			—			
YCA34-2N	500 (19, 37)	1	1-7/8	6-1/2	3/8	210	—	U210 (6)	C210 (2)	L210 (2)
YCAB34-4N	500 (19, 37)	2	3	6-7/8	1/2		—			
YCA39-2N	750 (37, 61)	1	2-3/8	7-1/4	5/8	627	—	—	C627 (3)	L627 (3)
YCAB39-4N	750 (37, 61)	2	3	7-1/2	1/2		—	—		
YCAB44-4N	1000 (61)			7-7/8	5/8	345	—	—	C345 (4)	L345 (4)

YCAB have brazed pads.

† U Die with adapter PT-6515
‡ U Die with adapter PUADP-1

To ensure proper tightening torque use BURNDY® BTW torque wrenches.

Blue highlighted items are industry standard and most frequently ordered.

TYPE YCA-RL-2N

HYLUG™

ACCOMMODATES: AAC (STR, COMPRESSED, COMPACT), ACSR AND AAAC

MATERIAL: ALUMINUM

Aluminum compression HYLUG™ for terminating overhead conductors to switch pads and other substation or switch yard apparatus. NEMA standard mounting holes. Installed with same die as equivalent fulltension UNISPLICE™. Pre-filled with PENETROX™ joint compound, stripsealed and capped to limit oxide growth and to increase the life of the connection.

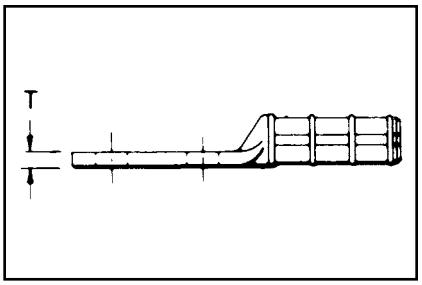

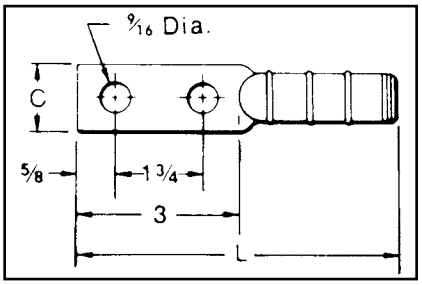

Catalog Number	Conductor	C	L	T	Die Index	Tools, Die Set Catalog Number, & (Number of Crimps)	
						MD7, MD6	Y35, Y750, Y45†, Y46‡
YCA4RL-2N	4 ACSR (6-1, 7-1) 4 6201 (7) 4 AAC (7)	7/8	6	3/8	BG, 243, 687	W-BG (8) Fixed BG (8) W687 (4	U243
YCA2RL-2N	2 ACSR (6-1, 7-1) 2 6201 (7) 2 AAC (7)						
YCA25RL-2N	1/0 ACSR (6-1) 1/0 6201 (7) 1/0 AAC (7) 1/0 5005 (7)	1-1/8	7		C, 247, 702	WC (12) W702 (4)**	U247 (3)
YCA26RL-2N	2/0 ACSR (6-1) 2/0 6201 (7) 2/0 AAC (7) 2/0 5005 (7)		6-1/2		659	—	U659 (3)
YCA27RL-2N	3/0 ACSR (6-1) 3/0 6201 (7) 3/0 AAC (7)	1-1/4			658		U658 (3)
YCA28RL-2N	4/0 ACSR (6-1) 4/0 6201 (7) 4/0 AAC (7) 4/0 5005 (7)	1-1/2			654		U654 (3)
YCA321RL-2N	336.4 ACSR (18-1) 336.4 AAC (19) 500 AAC	1-5/8			655		U655 (3)

† U Die with adapter PT-6515.
‡ U Die with adapter PUADP-1.

** MD6 NON-BOW Dies produce straight sleeves without rotating tool.

For faster installations use BURNDY® PATRIOT® family of battery tools.

Blue highlighted items are industry standard and most frequently ordered.

TYPES YCA-R-N & YCAK-R-N

ACCOMMODATES: AAC (STR, COMPRESSED, COMPACT), ACSR AND AAAC

MATERIAL: ALUMINUM

Aluminum compression HYLUG™ for terminating jumper loops and equipment taps at switchpads and other substation apparatus, or to YDW-R deadends. NEMA standard mounting holes. Installed with same dies as equivalent full-tension sleeves. Pre-filled with PENETROX™ joint compound, stripsealed and capped to limit oxide growth and to increase the life of the connection.

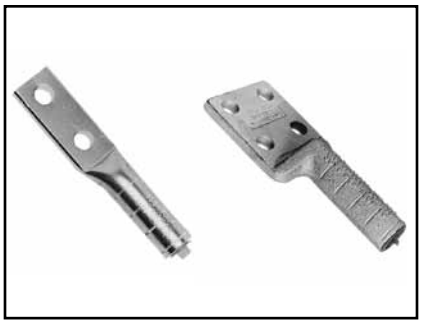

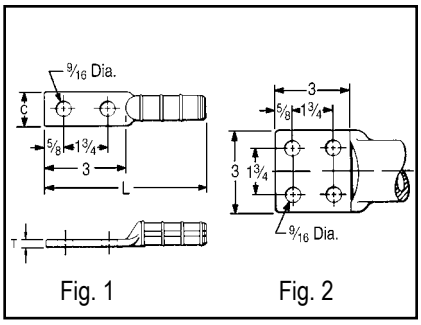

Fig. 1 Fig. 2

Catalog Number	Conductor		Fig No.	C	L	T	Die Index	Die Set, Tools Catalog Number, & (Number of Crimps)					
	ACSR, 6201, 5005	Aluminum						MD7, MD6 Series	Y35, Y750	Y45	Y46	Y48B	Y60BHU
YCA4R-2N	4	4 (7)	1	1-1/4	5-5/8	1/4	237	W237 (3)	U237 (2)	†	‡	—	—
YCA2R-2N	2	2 (7)					239	W239 (3)	U239 (2)	†	‡	—	—
YCA25R-2N	1/0	1/0 (7,19)		7/8	6-1/4		KS18 243 BG or 8A	BG (8) W-BG (4)* U243 (2)	U-BG (4)	†	‡	—	—
YCAK25R-4N			2	3	6-7/8	3/8		BG (8) W-BG (4)* U243 (2)	U243 (2)	†	‡	C243 (2)	L243 (1)
YCA26R-2N	2/0	2/0 (7,19)	1	1	6-3/8	1/4	245AA	W245 (4)	U245 (2)	†	‡	C245 (2)	L245 (1)
YCA27R-2N	3/0 - 110.8 (12-7)	3/0 (7,19)		1-1/8	6-3/4		247	W247 (6)	U247 (3)	†	‡	C247 (3)	L247 (2)
YCA28R-2N	4/0 (6-1, 6-7)	4/0 (7,19)		1-1/4	6-7/8		249	K840 249 11A	U249 (3)	†	‡	C249 (1)	L249 (2)
YCAK28R-4N			2	3	7-3/8	3/8	249			†	‡		
YCA30R-2N	266.8 (18-1, 6-7 26-7)	266.8 (7,19)	1	1-1/2	6-3/4		251	—	U251 (4)	†	‡	C251 (2)	L251 (2)
YCAK30R-4N			2	3	7-3/8			—		†	‡		
YCA321R-2N	336.4 (18-1)	336.4 (19) - 350 (19, 37, 61)	1	1-1/2	7		321	—	U321 (4)	†	‡	C321 (2)	L321 (2)
YCAK321R-4N			2	3	7-1/8			—		†	‡		
YCA33R-2N	336.4 (26-7, 30-7) 397.5 (18-1)	397.5 (19)	1	1-5/8	7-1/4		316	—	U316 (4)	†	‡	C316 (2)	L316 (2)
YCAK33R-4N			2	3	7-3/8			—		†	‡		
YCA35R-2N	397.5 (26-7, 30-7)	477 (19, 37) - 500 (37, 61)	1	1-7/8	7-1/2		317	—	U317 (4)	†	‡	C317 (2)	L317 (2)
YCAK35R-4N			2	3	7-3/8			—		†	‡		
YCA361R-2N	477 (18-1)	500 (37, 61)	1	1-7/8	7-5/8	7/16	327	—	U327 (4)	†	‡	C327 (2)	L327 (2)
YCAK361R-4N			2	3				—		†	‡		
YCA37R-2N	556.5 (18-1) 477 (24-7, 26-7, 30-7)	556.5 (19, 37)	1	2	8-1/8	3/8	261	—	U261 (5)	†	‡	C261 (2)	L261 (2)
YCAK37R-4N			2	3				—		†	‡		
YCA39R-2N	556.5 (24-7,26-7)	—	1	2-1/8	8-3/8	1/2	608	—	U608 (6)	†	‡	C608 (2)	L608 (2)
YCAK39R-4N			2	3	8-1/8			—		†	‡		
YCAK361A-4N	—	636 (37)					469	—	—	S469 (6)	P469 (6)	C469 (2)	L469 (2)

* Multiple crimp die set; makes more than one crimp per tool compression.
Figure indicates number of compressions.
† U Die with adapter PT-6515.
‡ U Die with adapter PUADP-1.

YCA HYLUGS™ are made from heavy walled tubing.
YCA4R-2N, YCA2R-2N and all YCAK HYLUGS™ are cast aluminum alloy.

For faster installations use BURNDY® PATRIOT® family of battery tools.

(Table continued on next page.)

Blue highlighted items are industry standard and most frequently ordered.

TYPES YCA-R-N & YCAK-R-N
(Continued)

ACCOMMODATES: AAC (STR, COMPRESSED, COMPACT), ACSR AND AAAC

MATERIAL: ALUMINUM

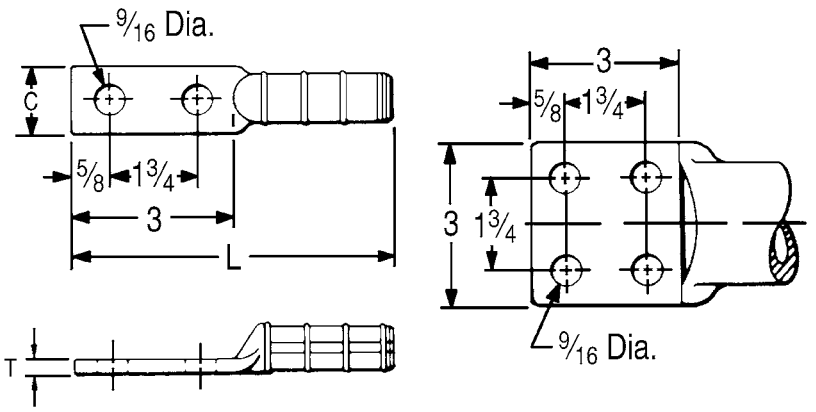

Fig. 1 Fig. 2

Catalog Number	Conductor		Fig No.	C	L	T	Die Index	Die Set,Tools Catalog Number, & (Number of Crimps)			
	ACSR, 6201, 5005	Aluminum						Y45	Y46	Y48B	Y60BHU
YCA43R-2N	605 (30-19) 636 (24-7, 26-7, 30-19) 666.6 (24-7)	795 (37, 61) 700 (61) 750 (61)	1	2-/12	10-1/4	3/4	292 or 319	S292 (6) S319 (6)	P292 (6) P319 (6)	C292 (3) C319 (3)	L292 (3) L319 (3)
YCAK43R-4N			2	3	9-5/8						
YCA391A-2N	—	795 (37) 750 (61)	1	2-3/8	10-1/8	5/8	342	S342 (6)	P342 (6)	C342 (3)	L342 (3)
YCAK391A-4N	—		2	3	9-7/8						
YCAK453R-4N	795 (36-1) 715.5 (26-7) 795 (45-7)	—			9-5/8		292*, 578	S292 (6)	P292 (6)	C292 (6)	L292 (3)
YCA44A2NG2	—	1000	1	2-3/8	11		342	S342 (6)	P342 (6)	C342 (3)	L342 (3)
YCA45R-2N	795 (26-7, 54-7)	900 (61, 91) 954 (37, 61) 1000 (61)		2-1/2	10-1/4		352	S352 (6) S579 (6)	P352 (6) P579 (6)	C352 (3) C579 (3)	352 (3) L579 (3)
YCAK45R-4N			2	3	9-5/8						
YCA48R-4N	900 (54-7) 954 (54-7) (45-7) 1033.5 (45-7) (36-1)	—			10	3/4	575	—	—	C575 (3)	L575 (3)
YCA441A-4N	—	1033.5 (37, 61) - 113 (61)									
YCA451A-4N	1113 (54-19)	1272 (61)			10-1/4	5/8	422	—	—	—	L422 (3)

* Multiple crimp die set; makes more than one crimp per tool compression.
Figure indicates number of compressions.

YCA HYLUGS™ are made from heavy walled tubing.
YCA4R-2N, YCA2R-2N and all YCAK HYLUGS™ are cast aluminum alloy.

For faster installations use BURNDY® PATRIOT® family of battery tools.

Blue highlighted items are industry standard and most frequently ordered.

TYPE YAK-A-2G

STACKING HYLUG™

ACCOMMODATES:
AAC (STR, COMPRESSED)

MATERIAL: ALUMINUM

Cast aluminum HYLUG™ with a special tongue configuration for stacking of conductors on two and four hole NEMA transformer or equipment terminal pads. Up to eight conductors may be stacked on one four hole NEMA pad. HYLUG™ is prefilled with PENETROX™ joint compound, stripsealed and capped to limit oxide growth and to increase the life of the connection.

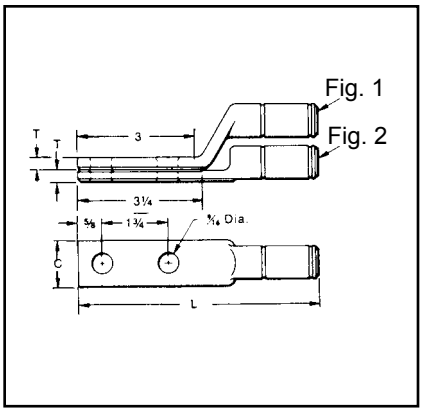

Catalog Number	Fig No.	Conductor	C	L	T	Die Index	Die Set,Tools Catalog Number, & (Number of Crimps)			
							MD7, MD6 Series	Y35, Y750	Y45	Y46
YAK2CA2G1	1	2 Str.	7/8	5-5/8	1/4	BG K-5/8 243	BG (3) W-BG (1) W243 (1)	U-BG (1) UK 581T (3) U243 (1)	† † †	‡ ‡ ‡
YAK2CA2G2	2									
YAK25A-2G1	1	1/0 Str.								
YAK25A-2G2	2									
YAK28A-2G1	1	4/0 Str.**	1-1/8	6-1/4	5/16	249 K-840	W249* W-K840*	U249*	† †	‡ ‡
YAK28A-2G2	2									
YAK29A-2G1	1	250	1-5/8	6-7/8	3/8	299 705	—	U31ART* U705	† †	‡ ‡
YAK31A-2G1	1	350								
YAK31A-2G2	2									
YAK311A-2G1	1	397.5		7-3/4	7/16	317 705		U317* U705*	† †	‡ ‡
YAK311A-2G2	2									
YAK34A-2G1	1	500								
YAK34A-2G2	2									
YAK-361A-2G1	1	600 636		8-1/4	5/8	608 722 786		U608* U786*	† S786* S722*	‡ P786* P722*
YAK-361A-2G2	2									
YAK39A-2G1	1	700 750								
YAK39A-2G2	2									
YAK44A-2NG8	1	1000		8-7/8		302		—	S44ART*	P44ART*
YAK44A-2NG7	2							—		

* Overlap crimps.
** Accommodates 4/0 Str., Al or Cu.

† U Die with adapter PT-6515.
‡ U Die with adapter PUADP-1.

For faster installations use BURNDY® PATRIOT® family of battery tools.

Blue highlighted items are industry standard and most frequently ordered.

TYPES YCAK-A & YRA

ALUMINUM HYLUG™

ACCOMMODATES: AAC (STR, COMPRESSED), ACSR AND COPPER

MATERIAL: ALUMINUM

Aluminum HYLUG™ for joining aluminum and copper cable to transformer and equipment pads. HYLUG™ is pre-filled with PENETROX™ joint compound, stripsealed and capped to limit oxide growth and to increase the life of the connection. Installed with standard tooling, five die sets install fourteen terminal sizes.

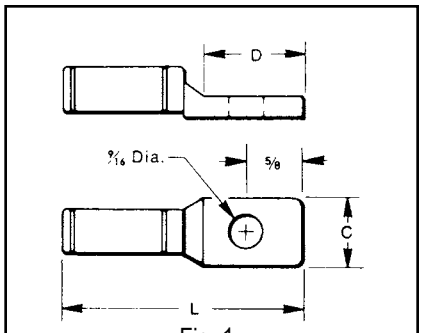

Fig. 1

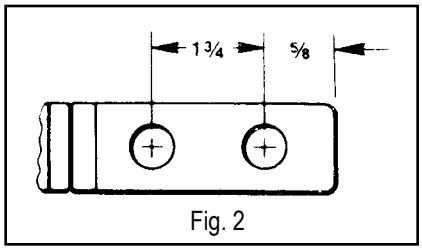

Fig. 2

Catalog Number	Fig No.	Conductor			C	D	L	Die Index	Die Set, Tool Catalog Number & (Number of Crimps)			
		Copper	Aluminum Conc.& Compact	ACSR					MD7, MD6 Series	Y35, Y750	Y45	Y46
YRA8CU-1	1	6 Sol. - 8 Sol.	8 Str.	—	15/16	1-1/16	2-9/16	BG 243	BG (3) K 5/8 243 (1)	U-BG (1) U-K-5/8-1T (3) U243 (1)	† † †	‡ ‡ ‡
YRA6CU-1		4 Sol. - 6 Str.	4 Sol. - 6 Str.	6 (6-1)								
YRA4CU-1		2 Sol. - 4 Str.	2 Sol. - 4 Str.	4 (6-1, 7-1)								
YRA1CU-1		1 Str. - 2 Str.	1 Str. - 2 Str.**	2 (6-1, 7-1)								
YRA25A-1		—	1/0 Str.	—								
YRAL4CU		2 Sol. - 4 Str.	2 Sol. - 4 Str.	4 (6-1, 7-1)		1-1/4	3-1/4	249 K-840	W249* WK840*	U249* UK-840	† †	‡ ‡
YRAL1CU		1 Str. - 2 Str.	1 Str. - 2 Str.	2 (6-1, 7-1)								
YRA25U		1/0 Str.	1/0 Str.	1/0 (6-1)								
YRA26U		2/0 Str.	2/0 Str.	2/0 (6-1)								
YRA27U		3/0 Str.	3/0 Str.	—								
YRA28U		4/0 Str.	4/0 Str.	—								
YCAK28A-2G1*	2		4/0 Str.	—	1-1/4	3	5-5/8	317 705	—	U317* U705*	† S705* †	‡ P705* ‡
YCAK29A-2G1*		250	250	4/0 (6-1)								
YCAK31AG1*	1	350	350	—		1-5/16	4-1/2					
YCAK31A-2G1*	2			—		—	6-1/4					
YCAK34A-2G3*		500	500	—	1-1/2		6-1/2	608 786	— —	U608* U786*	† S786* †	‡ P786* ‡
YCAK36A-2G1*		—	600	—		3						
YCAK39A-2G2*		—	750	—		—	6-15/16					
YCAK44A-2G2*		—	1000	—	1-11/16		7-1/2	302	—	—	S44ART*	P44ART*

* Overlap crimps.
** YRA1CU-1 not recommended for 2 comp. conductor.
† U Die with adapter PT-6515.
‡ U Die with adapter PUADP-1.
For faster installations use BURNDY® PATRIOT® family of battery tools.

Blue highlighted items are industry standard and most frequently ordered.

TABLE OF CONTENTS

ACSR Conductor Accessories

Deadends Single Pad	I-3
Deadends Double Pad	I-4
Deadends Single Pad EHV	I-5
Deadends Double Pad EHV	I-6
Splices	I-7
Splices EHV	I-8
Terminals	I-9
Terminals EHV	I-10
Loop Sleeve	I-11
Loop Sleeve EHV	I-12
T-Tap	I-13
T-Tap with Pad	I-14
Repair Sleeve	I-15

ACSS Conductor Accessories

Deadends Single Pad	I-16
Deadends Double Pad	I-17
Deadends Single Pad EHV	I-18
Deadends Double Pad EHV	I-19
Splices	I-20
Splices EHV	I-21
Terminals	I-22
Terminals EHV	I-23
Loop Sleeve	I-24
Loop Sleeve EHV	I-25
T-Tap	I-26
T-Tap with Pad	I-27
Repair Sleeve	I-28

AAC/ACAR Conductor Accessories

Deadends Single Pad	I-29
Deadends Single Pad EHV	I-30
Deadends Double Pad	I-31
Deadends Double Pad EHV	I-32
Splices (Stranded)	I-33
Splices (ACAR)	I-34
Splices EHV (Stranded)	I-35
Splices EHV (ACAR)	I-36
Terminals	I-37
Terminals EHV	I-38
Loop Sleeve	I-39
Loop Sleeve EHV	I-40
T-Tap with Pad	I-41
T-Tap	I-42
Repair Sleeve	I-43

Steel / Alumoweld Conductor Accessories

Terminal	I-44
Splices (Alumoweld)	I-45
Splices (EHS Steel)	I-46

ACCC® Conductor Accessories

Deadend Kit	I-47
Splices	I-49
Terminals	I-50
T-Tap with Tap	I-51
Repair Sleeve	I-52

Blue highlighted items are industry standard and most frequently ordered.

TABLE OF CONTENTS
(Continued)

IMPLO® Implosive Connectors

ACSR

Joints, Deadends, Jumper Terminals, Repair Sleeves **I-54 - I-56**

ACSS

Joints, Deadends, Jumper Terminals, Repair Sleeves **I-57**

ACSS/TW

Joints, Deadends, Jumper Terminals, Repair Sleeves **I-58**

AAC/AAAC/ASC

Joints, Deadends, Jumper Terminals, Repair Sleeves **I-59**

Static (Sky) Wire

Joints, Deadends **I-60**

Motion Control Accessories

Stockbridge Damper **I-61**

Spacer Damper **I-62**

Rigid Spacers **I-63**

TYPE YTW-R-REK, YTW-R, YTW-RE, YNA-R-H

Single Pad Full Tension Deadend for ACSR Conductor

Full tension compression deadend for ACSR transmission lines up to and including 230 kV. Standard 15º NEMA tap pad provides either 0º or 30º tap when YNA-R15 terminal is used.

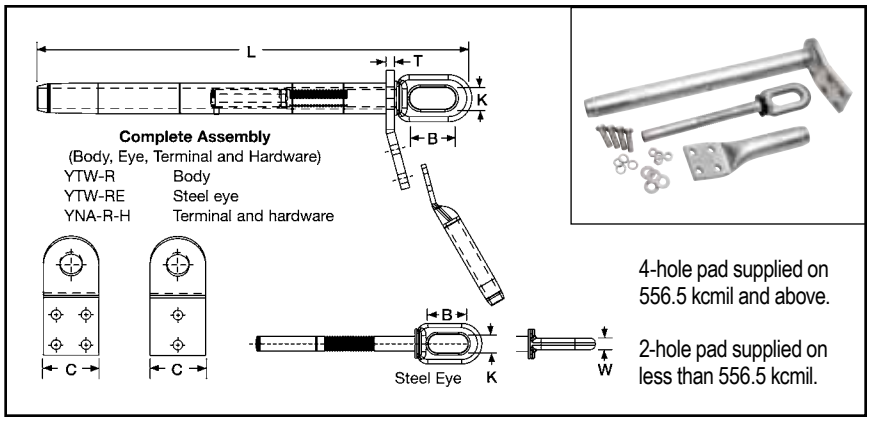

ACSR				Single Pad		Inches			Body Die*‡	Steel Eye*	Inches			Eye Die	Terminal with Hardware	Term Die*‡
Conductor Name	Size kcmil	Stranding Alum.	Stranding Steel	Complete Assembly	Alum. Body	L	C	T			B	K	W			
Linnet	336.4	26	7	**YTW32R34REK**	**YTW32R**	17.53	2.25	0.50	L717	**YTW34RE**	2.50	0.88	0.62	L718	**YNA32R15H**	L717
Oriole	336.4	30	7	**YTW32R33REK**	**YTW32R**	17.53	2.25	0.50	L717	**YTW33RE**	2.50	0.88	0.62	L718	**YNA32R15H**	L717
Ibis	397.5	26	7	**YTW34R34REK**	**YTW34R**	17.60	2.25	0.50	L719	**YTW34RE**	2.50	0.88	0.62	L718	**YNA34R15H**	L719
Flicker	477	24	7	**YTW36R362REK**	**YTW36R**	19.41	2.25	0.50	L720	**YTW362RE**	2.50	0.88	0.62	L721	**YNA36R15H**	L720
Hawk	477	26	7	**YTW36R36REK**	**YTW36R**	19.41	2.25	0.50	L720	**YTW36RE**	2.50	0.88	0.62	L721	**YNA36R15H**	L720
Parakeet	556.5	24	7	**YTW39R43REK**	**YTW39R**	19.66	2.25	0.50	L722	**YTW43RE**	2.50	0.88	0.69	L723	**YNA39R15H**	L722
Dove	556.5	26	7	**YTW39R43REK**	**YTW39R**	19.66	2.25	0.50	L722	**YTW43RE**	2.50	0.88	0.69	L723	**YNA39R15H**	L722
Peacock	605	24	7	**YTW43R43REK**	**YTW43R**	20.49	3.25	0.50	L724	**YTW43RE**	2.50	0.88	0.69	L723	**YNA43R15H**	L724
Squab	605	26	7	**YTW43R43REK**	**YTW43R**	20.49	3.25	0.50	L724	**YTW43RE**	2.50	0.88	0.69	L723	**YNA43R15H**	L724
Rook	636	24	7	**YTW43R43REK**	**YTW43R**	20.49	3.25	0.50	L724	**YTW43RE**	2.50	0.88	0.69	L723	**YNA43R15H**	L724
Grosbeak	636	26	7	**YTW43R43REK**	**YTW43R**	20.49	3.25	0.50	L724	**YTW43RE**	2.50	0.88	0.69	L723	**YNA43R15H**	L724
Flamingo	666.6	24	7	**YTW43R43REK**	**YTW43R**	20.49	3.25	0.50	L724	**YTW43RE**	2.50	0.88	0.69	L723	**YNA43R15H**	L724
Starling	715.5	26	7	**YTW451R48REK**	**YTW451R**	25.41	3.25	0.50	L725	**YTW48RE**	2.69	1.25	0.75	L726	**YNA451R15H**	L725
Cuckoo	795	24	7	**YTW451R45REK**	**YTW451R**	25.41	3.25	0.50	L725	**YTW45RE**	2.69	1.25	0.75	L726	**YNA451R15H**	L725
Drake	795	26	7	**YTW451R48REK**	**YTW451R**	25.41	3.25	0.50	L725	**YTW48RE**	2.69	1.25	0.75	L726	**YNA451R15H**	L725
Tern	795	45	7	**YTW451R481REK**	**YTW451R**	25.41	3.25	0.50	L725	**YTW481RE**	2.69	1.25	0.75	L726	**YNA451R15H**	L725
Condor	795	54	7	**YTW451R45REK**	**YTW451R**	25.41	3.25	0.50	L725	**YTW45RE**	2.69	1.25	0.75	L726	**YNA451R15H**	L725
Ruddy	900	45	7	**YTW48R481REK**	**YTW48R**	25.50	3.25	0.50	L727	**YTW481RE**	2.69	1.25	0.75	L726	**YNA49R15H**	L727
Rail	954	45	7	**YTW48R481REK**	**YTW48R**	25.50	3.25	0.50	L727	**YTW481RE**	2.69	1.25	0.75	L726	**YNA49R15H**	L727
Cardinal	954	54	7	**YTW48R48REK**	**YTW48R**	25.50	3.25	0.50	L727	**YTW48RE**	2.69	1.25	0.75	L726	**YNA49R15H**	L727
Ortolan	1033.5	45	7	**YTW49R483REK**	**YTW49R**	27.35	3.25	0.50	L727	**YTW483RE**	2.69	1.25	1.00	L726	**YNA49R15H**	L727
Curlew	1033.5	54	7	**YTW49R50REK**	**YTW49R**	27.35	3.25	0.50	L727	**YTW50RE**	2.69	1.25	1.00	L726	**YNA49R15H**	L727
Bluejay	1113	45	7	**YTW49R483REK**	**YTW49R**	27.35	3.25	0.50	L727	**YTW483RE**	2.69	1.25	1.00	L726	**YNA49R15H**	L727
Finch	1113	54	19	**YTW52R50REK**	**YTW52R**	31.55	3.25	0.50	L728	**YTW50RE**	2.69	1.25	1.00	L726	**YNA52R15H**	L728
Bunting	1192.5	45	7	**YTW52R521REK**	**YTW52R**	31.55	4.00	0.62	L728	**YTW521RE**	2.69	1.25	1.00	L726	**YNA52R15H**	L728
Bittern	1272	45	7	**YTW52R521REK**	**YTW52R**	31.55	4.00	0.62	L728	**YTW521RE**	2.69	1.25	1.00	L726	**YNA52R15H**	L728
Pheasant	1272	54	19	**YTW52R56REK**	**YTW52R**	31.55	4.00	0.62	L728	**YTW56RE**	2.69	1.25	1.00	L726	**YNA52R15H**	L728
Dipper	1351.5	45	7	**YTW52R521REK**	**YTW52R**	31.55	4.00	0.62	L728	**YTW521RE**	2.69	1.25	1.00	L726	**YNA52R15H**	L728
Martin	1351.5	54	19	**YTW52R56REK**	**YTW52R**	31.55	4.00	0.62	L728	**YTW56RE**	2.69	1.25	1.00	L726	**YNA52R15H**	L728
Nuthatch	1510.5	45	7	**YTW549R521REK**	**YTW549R**	31.55	4.00	0.62	L729	**YTW521RE**	2.69	1.25	1.00	L726	**YNA56R15H**	L729
Parrot	1510.5	54	19	**YTW549R56REK**	**YTW549R**	31.55	4.00	0.62	L729	**YTW56RE**	2.69	1.25	1.00	L726	**YNA56R15H**	L729
Lapwing	1590	45	7	**YTW549R549REK**	**YTW549R**	31.55	4.00	0.62	L729	**YTW549RE**	2.69	1.25	1.00	L726	**YNA56R15H**	L729
Falcon	1590	54	19	**YTW56R590REK**	**YTW56R**	31.99	4.00	0.62	L729	**YTW590RE**	2.69	1.25	1.00	L726	**YNA56R15H**	L729
Chukar	1780	84	19	**YTW58R58REK**	**YTW58R**	32.99	4.00	0.62	L735	**YTW58RE**	2.69	1.25	1.00	L726	**YNA58R15H**	L735
Bluebird	2156	84	19	**YTW59R59REK**	**YTW59R**	33.34	4.00	0.62	L735	**YTW59RE**	2.69	1.25	1.00	L726	**YNA59R15H**	L735
Kiwi	2167	72	7	**YTW59R591REK**	**YTW59R**	33.34	4.00	0.62	L735	**YTW591RE**	2.69	1.25	1.00	L726	**YNA59R15H**	L735

Complete Assembly: Includes Aluminum body, Steel eye, 15 degree terminal and aluminum hardware.
For stainless steel hardware add SS to end of catalog number for complete assembly (example: YTW32R34REKSS) or to terminal (YNA32R15HSS) if ordered separately.

For assembly without terminal and hardware add NT to end of complete assembly catalog number (example: YTW32R34REKNT).
Two hole NEMA pads standard on conductors up to 556.5 kcmil; Four hole NEMA pads on larger conductor sizes.

* Overlap crimps.
‡ Wide dies may be used on aluminum only (no steel), add suffix "W" to part number (example: L725W).

Blue highlighted items are industry standard and most frequently ordered.

TYPES YTW-RD-REK, YTW-RD, YTW-RE, YNA-R-H

Double Pad Full Tension Deadend for ACSR Conductor

Full tension compression deadend for ACSR transmission lines up to and including 230 kV. Standard 15º NEMA tap pad provides either 0º or 30º tap when YNA-R15 terminal is used.

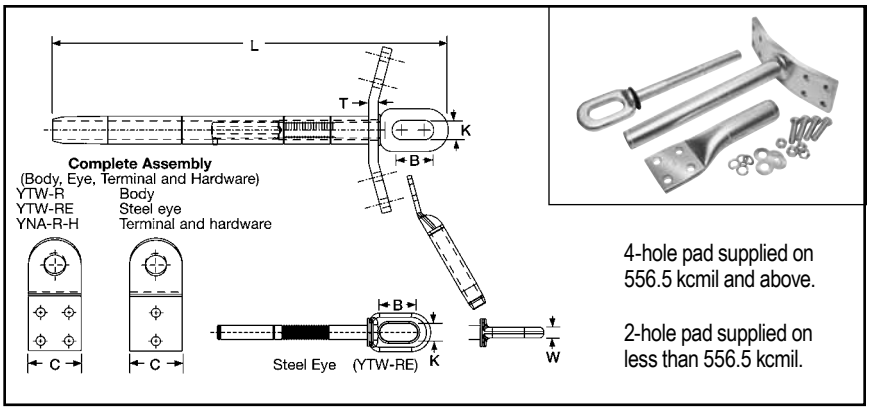

ACSR				Double Pad		Inches			Body Die*‡	Steel Eye*	Inches			Eye Die	Terminal with Hardware	Term Die*‡
Conductor Name	Size kcmil	Stranding Alum.	Stranding Steel	Complete Assembly	Alum. Body	L	C	T			B	K	W			
Linnet	336.4	26	7	**YTW32RD34REK**	**YTW32RD**	17.53	2.25	0.50	L717	**YTW34RE**	2.50	0.88	0.62	L718	**YNA32R15H**	L717
Oriole	336.4	30	7	**YTW32RD33REK**	**YTW32RD**	17.53	2.25	0.50	L718	**YTW33RE**	2.50	0.88	0.62	L719	**YNA32R15H**	L717
Ibis	397.5	26	7	**YTW34RD34REK**	**YTW34RD**	17.60	2.25	0.50	L719	**YTW34RE**	2.50	0.88	0.62	L718	**YNA34R15H**	L719
Flicker	477	24	7	**YTW36RD362REK**	**YTW36RD**	15.44	2.25	0.50	L720	**YTW362RE**	2.50	0.88	0.62	L721	**YNA36R15H**	L720
Hawk	477	26	7	**YTW36RD36REK**	**YTW36RD**	19.41	2.25	0.50	L720	**YTW36RE**	2.50	0.88	0.62	L721	**YNA36R15H**	L720
Parakeet	556.5	24	7	**YTW39RD43REK**	**YTW39RD**	19.66	2.25	0.50	L722	**YTW43RE**	2.50	0.88	0.69	L723	**YNA39R15H**	L722
Dove	556.5	26	7	**YTW39RD43REK**	**YTW39RD**	19.66	2.25	0.50	L722	**YTW43RE**	2.50	0.88	0.69	L723	**YNA39R15H**	L722
Peacock	605	24	7	**YTW43RD43REK**	**YTW43RD**	20.49	3.25	0.50	L724	**YTW43RE**	2.50	0.88	0.69	L723	**YNA43R15H**	L724
Squab	605	26	7	**YTW43RD43REK**	**YTW43RD**	20.49	3.25	0.50	L724	**YTW43RE**	2.50	0.88	0.69	L723	**YNA43R15H**	L724
Rook	636	24	7	**YTW43RD43REK**	**YTW43RD**	20.49	3.25	0.50	L724	**YTW43RE**	2.50	0.88	0.69	L723	**YNA43R15H**	L724
Grosbeak	636	26	7	**YTW43RD43REK**	**YTW43RD**	20.49	3.25	0.50	L724	**YTW43RE**	2.50	0.88	0.69	L723	**YNA43R15H**	L724
Flamingo	666.6	24	7	**YTW43RD43REK**	**YTW43RD**	20.49	3.25	0.50	L724	**YTW43RE**	2.50	0.88	0.69	L723	**YNA43R15H**	L724
Starling	715.5	26	7	**YTW451RD48REK**	**YTW451RD**	25.41	3.25	0.50	L725	**YTW48RE**	2.69	1.25	0.75	L726	**YNA451R15H**	L725
Cuckoo	795	24	7	**YTW451RD45REK**	**YTW451RD**	25.41	3.25	0.50	L725	**YTW45RE**	2.69	1.25	0.75	L726	**YNA451R15H**	L725
Drake	795	26	7	**YTW451RD48REK**	**YTW451RD**	25.41	3.25	0.50	L725	**YTW48RE**	2.69	1.25	0.75	L726	**YNA451R15H**	L725
Tern	795	45	7	**YTW451RD481REK**	**YTW451RD**	25.41	3.25	0.50	L725	**YTW481RE**	2.69	1.25	0.75	L726	**YNA451R15H**	L725
Condor	795	54	7	**YTW451RD45REK**	**YTW451RD**	25.41	3.25	0.50	L725	**YTW45RE**	2.69	1.25	0.75	L726	**YNA451R15H**	L725
Ruddy	900	45	7	**YTW48RD481REK**	**YTW48RD**	25.50	3.25	0.50	L727	**YTW481RE**	2.69	1.25	0.75	L726	**YNA49R15H**	L727
Rail	954	45	7	**YTW48RD481REK**	**YTW48RD**	25.50	3.25	0.50	L727	**YTW481RE**	2.69	1.25	0.75	L726	**YNA49R15H**	L727
Cardinal	954	54	7	**YTW48RD48REK**	**YTW48RD**	25.50	3.25	0.50	L727	**YTW48RE**	2.69	1.25	0.75	L726	**YNA49R15H**	L727
Ortolan	1033.5	45	7	**YTW49RD483REK**	**YTW49RD**	27.35	3.25	0.50	L727	**YTW483RE**	2.69	1.25	1.00	L726	**YNA49R15H**	L727
Curlew	1033.5	54	7	**YTW49RD50REK**	**YTW49RD**	27.35	3.25	0.50	L727	**YTW50RE**	2.69	1.25	1.00	L726	**YNA49R15H**	L727
Bluejay	1113	45	7	**YTW49RD483REK**	**YTW49RD**	27.35	3.25	0.50	L727	**YTW483RE**	2.69	1.25	1.00	L726	**YNA49R15H**	L727
Finch	1113	54	19	**YTW52RD50REK**	**YTW52RD**	31.55	3.25	0.50	L728	**YTW50RE**	2.69	1.25	1.00	L726	**YNA52R15H**	L728
Bunting	1192.5	45	7	**YTW52RD521REK**	**YTW52RD**	31.55	4.00	0.62	L728	**YTW521RE**	2.69	1.25	1.00	L726	**YNA52R15H**	L728
Bittern	1272	45	7	**YTW52RD521REK**	**YTW52RD**	31.55	4.00	0.62	L728	**YTW521RE**	2.69	1.25	1.00	L726	**YNA52R15H**	L728
Pheasant	1272	54	19	**YTW52RD56REK**	**YTW52RD**	31.55	4.00	0.62	L728	**YTW56RE**	2.69	1.25	1.00	L726	**YNA52R15H**	L728
Dipper	1351.5	45	7	**YTW52RD521REK**	**YTW52RD**	31.55	4.00	0.62	L728	**YTW521RE**	2.69	1.25	1.00	L726	**YNA52R15H**	L728
Martin	1351.5	54	19	**YTW52RD56REK**	**YTW52RD**	31.55	4.00	0.62	L728	**YTW56RE**	2.69	1.25	1.00	L726	**YNA52R15H**	L728
Nuthatch	1510.5	45	7	**YTW549RD521REK**	**YTW549RD**	31.55	4.00	0.62	L729	**YTW521RE**	2.69	1.25	1.00	L726	**YNA56R15H**	L729
Parrot	1510.5	54	19	**YTW549RD56REK**	**YTW549RD**	31.55	4.00	0.62	L729	**YTW56RE**	2.69	1.25	1.00	L726	**YNA56R15H**	L729
Lapwing	1590	45	7	**YTW549RD549REK**	**YTW549RD**	31.55	4.00	0.62	L729	**YTW549RE**	2.69	1.25	1.00	L726	**YNA56R15H**	L729
Falcon	1590	54	19	**YTW56RD590REK**	**YTW56RD**	31.99	4.00	0.62	L729	**YTW590RE**	2.69	1.25	1.00	L726	**YNA56R15H**	L729
Chukar	1780	84	19	**YTW58RD58REK**	**YTW58RD**	32.99	4.00	0.62	L735	**YTW58RE**	2.69	1.25	1.00	L726	**YNA58R15H**	L735
Bluebird	2156	84	19	**YTW59RD59REK**	**YTW59RD**	33.34	4.00	0.62	L735	**YTW59RE**	2.69	1.25	1.00	L726	**YNA59R15H**	L735
Kiwi	2167	72	7	**YTW59RD591REK**	**YTW59RD**	33.34	4.00	0.62	L735	**YTW591RE**	2.69	1.25	1.00	L726	**YNA59R15H**	L735

Complete Assembly: Includes Aluminum body, Steel eye, 15 degree terminal and aluminum hardware.
For stainless steel hardware add SS to end of catalog number for complete assembly (example: YTW32R34REKSS) or to terminal (YNA32R15HSS) if ordered separately.

For assembly without terminal and hardware add NT to end of complete assembly catalog number (example: YTW32R34REKNT).
Two hole NEMA pads standard on conductors up to 556.5 kcmil; Four hole NEMA pads on larger conductor sizes.

* Overlap crimps.
‡ Wide dies may be used on aluminum only (no steel), add suffix "W" to part number (example: L725W).

Blue highlighted items are industry standard and most frequently ordered.

TYPES YTW-RT-REK, YTW-RT, YTW-RE, YNA-RT-H EHV

Single Pad, EHV Full Tension Deadend for ACSR Conductor

Full tension compression deadend for ACSR transmission lines at 345 kV and over. Standard 15º NEMA tap pad provides either 0º or 30º tap when YNA-R15 terminal is used.

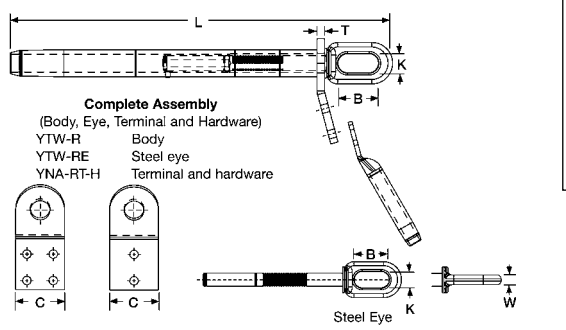

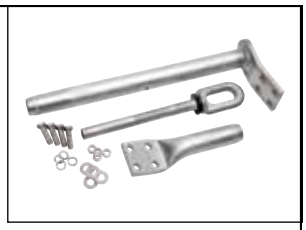

4-hole pad supplied on 556.5 kcmil and above.

2-hole pad supplied on less than 556.5 kcmil.

ACSR				Single Pad		Inches			Body Die*‡	Steel Eye*	Inches			Eye Die	Terminal with Hardware	Term Die*‡
Conductor Name	Size kcmil	Stranding		Complete Assembly	Alum. Body	L	C	T			B	K	W			
		Alum.	Steel													
Linnet	336.4	26	7	**YTW32RT34REK**	**YTW32RT**	17.53	2.25	0.50	L717	**YTW34RE**	2.50	0.88	0.62	L718	**YNA32RT15H**	L717
Oriole	336.4	30	7	**YTW32RT33REK**	**YTW32RT**	17.53	2.25	0.50	L717	**YTW33RE**	2.50	0.88	0.62	L718	**YNA32RT15H**	L717
Ibis	397.5	26	7	**YTW34RT34REK**	**YTW34RT**	17.60	2.25	0.50	L719	**YTW34RE**	2.50	0.88	0.62	L718	**YNA34RT15H**	L719
Flicker	477	24	7	**YTW36RT362REK**	**YTW36RT**	19.41	2.25	0.50	L720	**YTW362RE**	2.50	0.88	0.62	L721	**YNA36RT15H**	L720
Hawk	477	26	7	**YTW36RT36REK**	**YTW36RT**	19.41	2.25	0.50	L720	**YTW36RE**	2.50	0.88	0.62	L721	**YNA36RT15H**	L720
Parakeet	556.5	24	7	**YTW39RT43REK**	**YTW39RT**	19.66	2.25	0.50	L722	**YTW43RE**	2.50	0.88	0.69	L723	**YNA39RT15H**	L722
Dove	556.5	26	7	**YTW39RT43REK**	**YTW39RT**	19.66	2.25	0.50	L722	**YTW43RE**	2.50	0.88	0.69	L723	**YNA39RT15H**	L722
Peacock	605	24	7	**YTW43RT43REK**	**YTW43RT**	20.49	3.25	0.50	L724	**YTW43RE**	2.50	0.88	0.69	L723	**YNA43RT15H**	L724
Squab	605	26	7	**YTW43RT43REK**	**YTW43RT**	20.49	3.25	0.50	L724	**YTW43RE**	2.50	0.88	0.69	L723	**YNA43RT15H**	L724
Rook	636	24	7	**YTW43RT43REK**	**YTW43RT**	20.49	3.25	0.50	L724	**YTW43RE**	2.50	0.88	0.69	L723	**YNA43RT15H**	L724
Grosbeak	636	26	7	**YTW43RT43REK**	**YTW43RT**	20.49	3.25	0.50	L724	**YTW43RE**	2.50	0.88	0.69	L723	**YNA43RT15H**	L724
Flamingo	666.6	24	7	**YTW43RT43REK**	**YTW43RT**	20.49	3.25	0.50	L724	**YTW43RE**	2.50	0.88	0.69	L723	**YNA43RT15H**	L724
Starling	715.5	26	7	**YTW451RT48REK**	**YTW451RT**	25.41	3.25	0.50	L725	**YTW48RE**	2.69	1.25	0.75	L726	**YNA451RT15H**	L725
Cuckoo	795	24	7	**YTW451RT45REK**	**YTW451RT**	25.41	3.25	0.50	L725	**YTW45RE**	2.69	1.25	0.75	L726	**YNA451RT15H**	L725
Drake	795	26	7	**YTW451RT48REK**	**YTW451RT**	25.41	3.25	0.50	L725	**YTW48RE**	2.69	1.25	0.75	L726	**YNA451RT15H**	L725
Tern	795	45	7	**YTW451RT481REK**	**YTW451RT**	25.41	3.25	0.50	L725	**YTW481RE**	2.69	1.25	0.75	L726	**YNA451RT15H**	L725
Condor	795	54	7	**YTW451RT45REK**	**YTW451RT**	25.41	3.25	0.50	L725	**YTW45RE**	2.69	1.25	0.75	L726	**YNA451RT15H**	L725
Ruddy	900	45	7	**YTW48RT481REK**	**YTW48RT**	25.50	3.25	0.50	L727	**YTW481RE**	2.69	1.25	0.75	L726	**YNA49RT15H**	L727
Rail	954	45	7	**YTW48RT481REK**	**YTW48RT**	25.50	3.25	0.50	L727	**YTW481RE**	2.69	1.25	0.75	L726	**YNA49RT15H**	L727
Cardinal	954	54	7	**YTW48RT48REK**	**YTW48RT**	25.50	3.25	0.50	L727	**YTW48RE**	2.69	1.25	0.75	L726	**YNA49RT15H**	L727
Ortolan	1033.5	45	7	**YTW49RT483REK**	**YTW49RT**	27.35	3.25	0.50	L727	**YTW483RE**	2.69	1.25	1.00	L726	**YNA49RT15H**	L727
Curlew	1033.5	54	7	**YTW49RT50REK**	**YTW49RT**	27.35	3.25	0.50	L727	**YTW50RE**	2.69	1.25	1.00	L726	**YNA49RT15H**	L727
Bluejay	1113	45	7	**YTW49RT483REK**	**YTW49RT**	27.35	3.25	0.50	L727	**YTW483RE**	2.69	1.25	1.00	L726	**YNA49RT15H**	L727
Finch	1113	54	19	**YTW52RT50REK**	**YTW52RT**	31.55	3.25	0.50	L728	**YTW50RE**	2.69	1.25	1.00	L726	**YNA52RT15H**	L728
Bunting	1192.5	45	7	**YTW52RT521REK**	**YTW52RT**	31.55	4.00	0.62	L728	**YTW521RE**	2.69	1.25	1.00	L726	**YNA52RT15H**	L728
Bittern	1272	45	7	**YTW52RT521REK**	**YTW52RT**	31.55	4.00	0.62	L728	**YTW521RE**	2.69	1.25	1.00	L726	**YNA52RT15H**	L728
Pheasant	1272	54	19	**YTW52RT56REK**	**YTW52RT**	31.55	4.00	0.62	L728	**YTW56RE**	2.69	1.25	1.00	L726	**YNA52RT15H**	L728
Dipper	1351.5	45	7	**YTW52RT521REK**	**YTW52RT**	31.55	4.00	0.62	L728	**YTW521RE**	2.69	1.25	1.00	L726	**YNA52RT15H**	L728
Martin	1351.5	54	19	**YTW52RT56REK**	**YTW52RT**	31.55	4.00	0.62	L728	**YTW56RE**	2.69	1.25	1.00	L726	**YNA52RT15H**	L728
Nuthatch	1510.5	45	7	**YTW549RT521REK**	**YTW549RT**	31.55	4.00	0.62	L729	**YTW521RE**	2.69	1.25	1.00	L726	**YNA56RT15H**	L729
Parrot	1510.5	54	19	**YTW549RT56REK**	**YTW549RT**	31.55	4.00	0.62	L729	**YTW56RE**	2.69	1.25	1.00	L726	**YNA56RT15H**	L729
Lapwing	1590	45	7	**YTW549RT549REK**	**YTW549RT**	31.55	4.00	0.62	L729	**YTW549RE**	2.69	1.25	1.00	L726	**YNA56RT15H**	L729
Falcon	1590	54	19	**YTW56RT590REK**	**YTW56RT**	31.99	4.00	0.62	L729	**YTW590RE**	2.69	1.25	1.00	L726	**YNA56RT15H**	L729
Chukar	1780	84	19	**YTW58RT58REK**	**YTW58RT**	32.99	4.00	0.62	L735	**YTW58RE**	2.69	1.25	1.00	L726	**YNA58RT15H**	L735
Bluebird	2156	84	19	**YTW59RT59REK**	**YTW59RT**	33.34	4.00	0.62	L735	**YTW59RE**	2.69	1.25	1.00	L726	**YNA59RT15H**	L735
Kiwi	2167	72	7	**YTW59RT591REK**	**YTW59RT**	33.34	4.00	0.62	L735	**YTW591RE**	2.69	1.25	1.00	L726	**YNA59RT15H**	L735

Complete Assembly: Includes Aluminum body, Steel eye, 15 degree terminal and aluminum hardware.
For stainless steel hardware add SS to end of catalog number for complete assembly (example: YTW32R34REKSS) or to terminal (YNA32R15HSS) if ordered separately.

For assembly without terminal and hardware add NT to end of complete assembly catalog number (example: YTW32R34REKNT).
Two hole NEMA pads standard on conductors up to 556.5 kcmil; Four hole NEMA pads on larger conductor sizes.

* Overlap crimps.
‡ Wide dies may be used on aluminum only (no steel), add suffix "W" to part number (example: L725W).

Blue highlighted items are industry standard and most frequently ordered.

TYPES YTW-RDT-REK, YTW-RDT, YTW-RE, YNA-RT-H EHV

Double Pad, EHV Full Tension Deadend for ACSR

Full tension compression deadend for ACSR transmission lines at 345 kV and over. Standard 15º NEMA tap pad provides either 0º or 30º tap when YNA-R15 terminal is used.

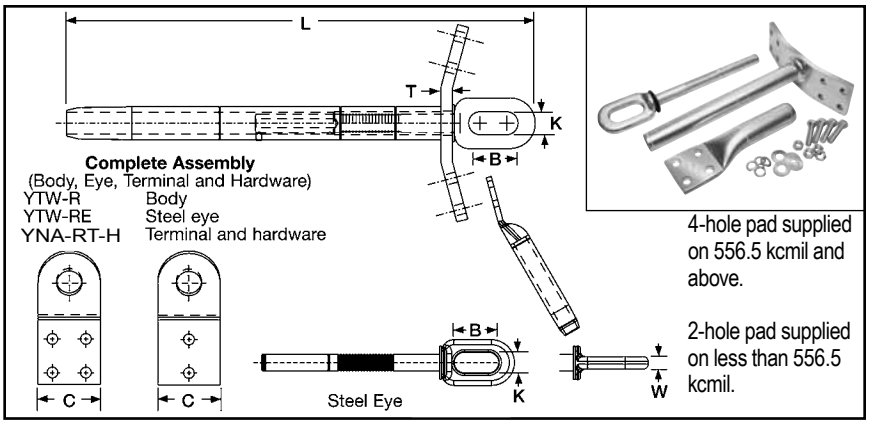

ACSR				Double Pad		Inches			Body Die*‡	Steel Eye*	Inches			Eye Die	Terminal with Hardware	Term Die*‡
Conductor Name	Size kcmil	Stranding Alum.	Stranding Steel	Complete Assembly	Alum. Body	L	C	T			B	K	W			
Linnet	336.4	26	7	**YTW32RDT34REK**	**YTW32RDT**	17.53	2.25	0.50	L717	**YTW34RE**	2.50	0.88	0.62	L718	**YNA32RT15H**	L717
Oriole	336.4	30	7	**YTW32RDT33REK**	**YTW32RDT**	17.53	2.25	0.50	L717	**YTW33RE**	2.50	0.88	0.62	L718	**YNA32RT15H**	L717
Ibis	397.5	26	7	**YTW34RDT34REK**	**YTW34RDT**	17.60	2.25	0.50	L719	**YTW34RE**	2.50	0.88	0.62	L718	**YNA34RT15H**	L719
Flicker	477	24	7	**YTW36RDT362REK**	**YTW36RDT**	15.44	2.25	0.50	L720	**YTW362RE**	2.50	0.88	0.62	L721	**YNA36RT15H**	L720
Hawk	477	26	7	**YTW36RDT36REK**	**YTW36RDT**	19.41	2.25	0.50	L720	**YTW36RE**	2.50	0.88	0.62	L721	**YNA36RT15H**	L720
Parakeet	556.5	24	7	**YTW39RDT43REK**	**YTW39RDT**	19.66	2.25	0.50	L722	**YTW43RE**	2.50	0.88	0.69	L723	**YNA39RT15H**	L722
Dove	556.5	26	7	**YTW39RDT43REK**	**YTW39RDT**	19.66	2.25	0.50	L722	**YTW43RE**	2.50	0.88	0.69	L723	**YNA39RT15H**	L722
Peacock	605	24	7	**YTW43RDT43REK**	**YTW43RDT**	20.49	3.25	0.50	L724	**YTW43RE**	2.50	0.88	0.69	L723	**YNA43RT15H**	L724
Squab	605	26	7	**YTW43RDT43REK**	**YTW43RDT**	20.49	3.25	0.50	L724	**YTW43RE**	2.50	0.88	0.69	L723	**YNA43RT15H**	L724
Rook	636	24	7	**YTW43RDT43REK**	**YTW43RDT**	20.49	3.25	0.50	L724	**YTW43RE**	2.50	0.88	0.69	L723	**YNA43RT15H**	L724
Grosbeak	636	26	7	**YTW43RDT43REK**	**YTW43RDT**	20.49	3.25	0.50	L724	**YTW43RE**	2.50	0.88	0.69	L723	**YNA43RT15H**	L724
Flamingo	666.6	24	7	**YTW43RDT43REK**	**YTW43RDT**	20.49	3.25	0.50	L724	**YTW43RE**	2.50	0.88	0.69	L723	**YNA43RT15H**	L724
Starling	715.5	26	7	**YTW451RDT48REK**	**YTW451RDT**	25.41	3.25	0.50	L725	**YTW48RE**	2.69	1.25	0.75	L726	**YNA451RT15H**	L725
Cuckoo	795	24	7	**YTW451RDT45REK**	**YTW451RDT**	25.41	3.25	0.50	L725	**YTW45RE**	2.69	1.25	0.75	L726	**YNA451RT15H**	L725
Drake	795	26	7	**YTW451RDT48REK**	**YTW451RDT**	25.41	3.25	0.50	L725	**YTW48RE**	2.69	1.25	0.75	L726	**YNA451RT15H**	L725
Tern	795	45	7	**YTW451RDT481REK**	**YTW451RDT**	25.41	3.25	0.50	L725	**YTW481RE**	2.69	1.25	0.75	L726	**YNA451RT15H**	L725
Condor	795	54	7	**YTW451RDT45REK**	**YTW451RDT**	25.41	3.25	0.50	L725	**YTW45RE**	2.69	1.25	0.75	L726	**YNA451RT15H**	L725
Ruddy	900	45	7	**YTW48RDT481REK**	**YTW48RDT**	25.50	3.25	0.50	L727	**YTW481RE**	2.69	1.25	0.75	L726	**YNA49RT15H**	L727
Rail	954	45	7	**YTW48RDT481REK**	**YTW48RDT**	25.50	3.25	0.50	L727	**YTW481RE**	2.69	1.25	0.75	L726	**YNA49RT15H**	L727
Cardinal	954	54	7	**YTW48RDT48REK**	**YTW48RDT**	25.50	3.25	0.50	L727	**YTW48RE**	2.69	1.25	0.75	L726	**YNA49RT15H**	L727
Ortolan	1033.5	45	7	**YTW49RDT483REK**	**YTW49RDT**	27.35	3.25	0.50	L727	**YTW483RE**	2.69	1.25	1.00	L726	**YNA49RT15H**	L727
Curlew	1033.5	54	7	**YTW49RDT50REK**	**YTW49RDT**	27.35	3.25	0.50	L727	**YTW50RE**	2.69	1.25	1.00	L726	**YNA49RT15H**	L727
Bluejay	1113	45	7	**YTW49RDT483REK**	**YTW49RDT**	27.35	3.25	0.50	L727	**YTW483RE**	2.69	1.25	1.00	L726	**YNA49RT15H**	L727
Finch	1113	54	19	**YTW52RDT50REK**	**YTW52RDT**	31.55	3.25	0.50	L728	**YTW50RE**	2.69	1.25	1.00	L726	**YNA52RT15H**	L728
Bunting	1192.5	45	7	**YTW52RDT521REK**	**YTW52RDT**	31.55	4.00	0.62	L728	**YTW521RE**	2.69	1.25	1.00	L726	**YNA52RT15H**	L728
Bittern	1272	45	7	**YTW52RDT521REK**	**YTW52RDT**	31.55	4.00	0.62	L728	**YTW521RE**	2.69	1.25	1.00	L726	**YNA52RT15H**	L728
Pheasant	1272	54	19	**YTW52RDT56REK**	**YTW52RDT**	31.55	4.00	0.62	L728	**YTW56RE**	2.69	1.25	1.00	L726	**YNA52RT15H**	L728
Dipper	1351.5	45	7	**YTW52RDT521REK**	**YTW52RDT**	31.55	4.00	0.62	L728	**YTW521RE**	2.69	1.25	1.00	L726	**YNA52RT15H**	L728
Martin	1351.5	54	19	**YTW52RDT56REK**	**YTW52RDT**	31.55	4.00	0.62	L728	**YTW56RE**	2.69	1.25	1.00	L726	**YNA52RT15H**	L728
Nuthatch	1510.5	45	7	**YTW549RDT521REK**	**YTW549RDT**	31.55	4.00	0.62	L729	**YTW521RE**	2.69	1.25	1.00	L726	**YNA56RT15H**	L729
Parrot	1510.5	54	19	**YTW549RDT56REK**	**YTW549RDT**	31.55	4.00	0.62	L729	**YTW56RE**	2.69	1.25	1.00	L726	**YNA56RT15H**	L729
Lapwing	1590	45	7	**YTW549RDT549REK**	**YTW549RDT**	31.55	4.00	0.62	L729	**YTW549RE**	2.69	1.25	1.00	L726	**YNA56RT15H**	L729
Falcon	1590	54	19	**YTW56RDT590REK**	**YTW56RDT**	31.99	4.00	0.62	L729	**YTW590RE**	2.69	1.25	1.00	L726	**YNA56RT15H**	L729
Chukar	1780	84	19	**YTW58RDT58REK**	**YTW58RDT**	32.99	4.00	0.62	L735	**YTW58RE**	2.69	1.25	1.00	L726	**YNA58RT15H**	L735
Bluebird	2156	84	19	**YTW59RDT59REK**	**YTW59RDT**	33.34	4.00	0.62	L735	**YTW59RE**	2.69	1.25	1.00	L726	**YNA59RT15H**	L735
Kiwi	2167	72	7	**YTW59RDT591REK**	**YTW59RDT**	33.34	4.00	0.62	L735	**YTW591RE**	2.69	1.25	1.00	L726	**YNA59RT15H**	L735

Complete Assembly: Includes Aluminum body, Steel eye, 15 degree terminal and aluminum hardware.
For stainless steel hardware add SS to end of catalog number for complete assembly (example: YTW32R34REKSS) or to terminal (YNA32R15HSS) if ordered separately.

For assembly without terminal and hardware add NT to end of complete assembly catalog number (example: YTW32R34REKNT).
Two hole NEMA pads standard on conductors up to 556.5 kcmil; Four hole NEMA pads on larger conductor sizes.

* Overlap crimps.
‡ Wide dies may be used on aluminum only (no steel), add suffix "W" to part number (example: L725W).

Blue highlighted items are industry standard and most frequently ordered.

TYPE YTS-R-RS

Full Tension Splice Kit for ACSR Conductor

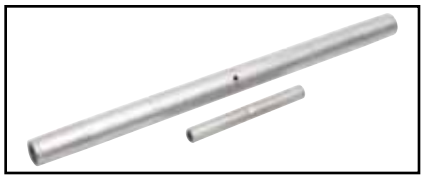

Full tension, two-piece, compression splice for ACSR transmission lines up to and including 230 kV. Outer aluminum sleeve has filler hole and plug for PENETROX™ joint compound. Kit includes the outer aluminum and inner steel sleeve.

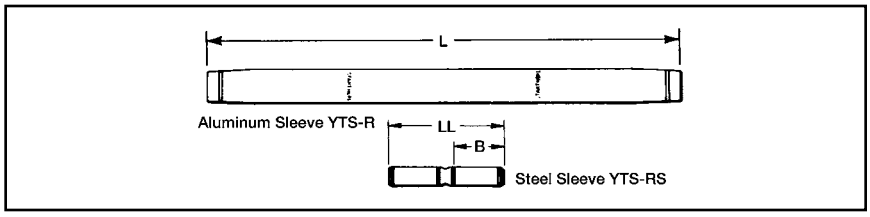

ACSR				Splice Kit	Aluminum Sleeve			Steel Sleeve		
Conductor Name	Size kcmil	Stranding			Inches		Die*‡	Inches		Die*
		Alum.	Steel		L	O.D.		LL	B	
Linnet	336.4	26	7	**YTS32R34RS**	17.30	1.19	L717	5.74	2.45	L718
Oriole	336.4	30	7	**YTS32R33RS**	17.30	1.19	L717	5.74	2.45	L718
Ibis	397.5	26	7	**YTS34R34RS**	17.30	1.28	L719	5.74	2.45	L718
Flicker	477	24	7	**YTS36R362RS**	18.16	1.41	L720	5.88	2.46	L721
Hawk	477	26	7	**YTS36R36RS**	18.16	1.41	L720	5.76	2.46	L721
Parakeet	556.5	24	7	**YTS39R43RS**	19.88	1.50	L722	5.90	2.47	L723
Dove	556.5	26	7	**YTS39R43RS**	19.88	1.50	L722	5.90	2.47	L723
Peacock	605	24	7	**YTS43R43RS**	21.44	1.61	L724	5.90	2.47	L723
Squab	605	26	7	**YTS43R43RS**	21.44	1.61	L724	5.90	2.47	L723
Rook	636	24	7	**YTS43R43RS**	21.44	1.61	L724	5.90	2.47	L723
Grosbeak	636	26	7	**YTS43R43RS**	21.44	1.61	L724	5.90	2.47	L723
Flamingo	666.6	24	7	**YTS43R43RS**	21.44	1.61	L724	5.90	2.47	L723
Starling	715.5	26	7	**YTS451R48RS**	28.96	1.80	L725	9.00	4.00	L726
Cuckoo	795	24	7	**YTS451R449RS**	28.96	1.80	L725	9.00	4.00	L726
Drake	795	26	7	**YTS451R48RS**	28.96	1.80	L725	9.00	4.00	L726
Tern	795	45	7	**YTS451R48RS**	28.96	1.80	L725	9.00	4.00	L726
Condor	795	54	7	**YTS451R449RS**	28.96	1.80	L725	9.00	4.00	L726
Rail	954	45	7	**YTS48R481RS**	29.16	1.97	L727	9.00	4.01	L726
Cardinal	954	54	7	**YTS48R48RS**	29.16	1.97	L727	9.00	4.00	L726
Ortolan	1033.5	45	7	**YTS49R483RS**	29.02	1.97	L727	9.00	4.01	L726
Curlew	1033.5	54	7	**YTS49R48RS**	29.02	1.97	L727	9.00	4.00	L726
Bluejay	1113	45	7	**YTS49R483RS**	29.02	1.97	L727	9.00	4.01	L726
Finch	1113	54	19	**YTS52R48RS**	42.33	2.25	L728	9.00	4.00	L726
Bunting	1192.5	45	7	**YTS52R521RS**	42.33	2.25	L728	9.00	4.00	L726
Bittern	1272	45	7	**YTS52R521RS**	42.33	2.25	L728	9.00	4.00	L726
Pheasant	1272	54	19	**YTS52R59RS**	42.33	2.25	L728	9.10	4.07	L726
Dipper	1351.5	45	7	**YTS52R521RS**	42.33	2.25	L728	9.00	4.00	L726
Martin	1351.5	54	19	**YTS52R59RS**	42.33	2.25	L728	9.10	4.07	L726
Nuthatch	1510.5	45	7	**YTS549R521RS**	34.13	2.50	L729	9.00	4.00	L726
Parrot	1510.5	54	19	**YTS549R59RS**	34.13	2.50	L729	9.10	4.07	L726
Lapwing	1590	45	7	**YTS549R549RS**	34.13	2.50	L729	9.00	4.00	L726
Falcon	1590	54	19	**YTS56R59RS**	34.13	2.50	L729	9.10	4.07	L726
Chukar	1780	84	19	**YTS58R48RS**	35.46	2.50	L735	9.00	4.00	L726
Bluebird	2156	84	19	**YTS59R59RS**	42.91	2.50	L735	9.10	4.07	L726
Kiwi	2167	72	7	**YTS59R521RS**	42.91	2.50	L735	9.00	4.00	L726

Splice Kit: Includes aluminum sleeve and steel sleeve.
* Overlap crimps.
‡ Wide dies may be used on aluminum only (no steel), add suffix "W" to part number (example: L725W).

Blue highlighted items are industry standard and most frequently ordered.

TYPE YTS-RT-RS EHV

Full Tension Splice Kit for ACSR Conductor

Full tension, two-piece, compression splice for ACSR transmission lines at 345 kV and over. Outer aluminum sleeve has filler hole and plug for PENETROX™ joint compound. Kit includes the outer aluminum and inner steel sleeve.

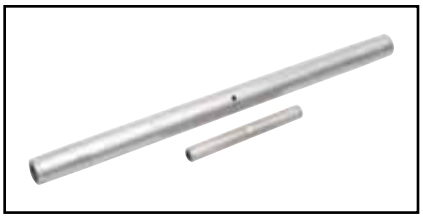

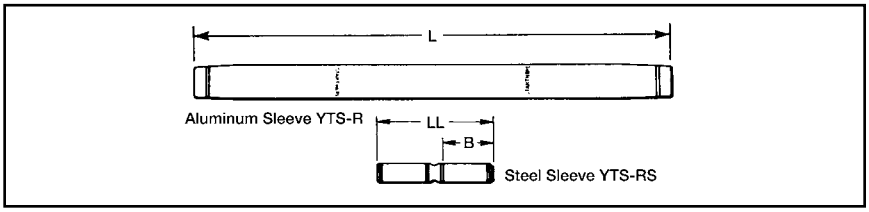

ACSR				Splice Kit	Aluminum Sleeve			Steel Sleeve		
Conductor Name	Size kcmil	Stranding			Inches		Die*‡	Inches		Die*
		Alum.	Steel		L	O.D.		LL	B	
Linnet	336.4	26	7	**YTS32RT34RS**	17.92	1.19	L717	5.74	2.45	L718
Oriole	336.4	30	7	**YTS32RT33RS**	17.92	1.19	L717	5.74	2.45	L718
Ibis	397.5	26	7	**YTS34RT34RS**	17.92	1.28	L719	5.74	2.45	L718
Flicker	477	24	7	**YTS36RT362RS**	18.92	1.41	L720	5.88	2.46	L721
Hawk	477	26	7	**YTS36RT36RS**	18.92	1.41	L720	5.76	2.46	L721
Parakeet	556.5	24	7	**YTS39RT43RS**	20.74	1.50	L722	5.90	2.47	L723
Dove	556.5	26	7	**YTS39RT43RS**	20.74	1.50	L722	5.90	2.47	L723
Peacock	605	24	7	**YTS43RT43RS**	22.28	1.61	L724	5.90	2.47	L723
Squab	605	26	7	**YTS43RT43RS**	22.28	1.61	L724	5.90	2.47	L723
Rook	636	24	7	**YTS43RT43RS**	22.28	1.61	L724	5.90	2.47	L723
Grosbeak	636	26	7	**YTS43RT43RS**	22.28	1.61	L724	5.90	2.47	L723
Flamingo	666.6	24	7	**YTS43RT43RS**	22.28	1.61	L724	5.90	2.47	L723
Starling	715.5	26	7	**YTS451RT48RS**	28.96	1.80	L725	9.00	4.00	L726
Cuckoo	795	24	7	**YTS451RT449RS**	28.96	1.80	L725	9.00	4.00	L726
Drake	795	26	7	**YTS451RT48RS**	28.96	1.80	L725	9.00	4.00	L726
Tern	795	45	7	**YTS451RT48RS**	28.96	1.80	L725	9.00	4.00	L726
Condor	795	54	7	**YTS451RT449RS**	28.96	1.80	L725	9.00	4.00	L726
Rail	954	45	7	**YTS48RT481RS**	29.16	1.97	L727	9.00	4.01	L726
Cardinal	954	54	7	**YTS48RT48RS**	29.16	1.97	L727	9.00	4.00	L726
Ortolan	1033.5	45	7	**YTS49RT483RS**	29.02	1.97	L727	9.00	4.01	L726
Curlew	1033.5	54	7	**YTS49RT48RS**	29.02	1.97	L727	9.00	4.00	L726
Bluejay	1113	45	7	**YTS49RT483RS**	29.02	1.97	L727	9.00	4.01	L726
Finch	1113	54	19	**YTS52RT48RS**	42.33	2.25	L728	9.00	4.00	L726
Bunting	1192.5	45	7	**YTS52RT521RS**	42.33	2.25	L728	9.00	4.00	L726
Bittern	1272	45	7	**YTS52RT521RS**	42.33	2.25	L728	9.00	4.00	L726
Pheasant	1272	54	19	**YTS52RT59RS**	42.33	2.25	L728	9.00	4.07	L726
Dipper	1351.5	45	7	**YTS52RT521RS**	42.33	2.25	L728	9.00	4.00	L726
Martin	1351.5	54	19	**YTS52RT59RS**	42.33	2.25	L728	9.00	4.07	L726
Nuthatch	1510.5	45	7	**YTS549RT521RS**	34.13	2.50	L729	9.00	4.00	L726
Parrot	1510.5	54	19	**YTS549RT59RS**	34.13	2.50	L729	9.10	4.07	L726
Lapwing	1590	45	7	**YTS549RT549RS**	34.13	2.50	L729	9.00	4.00	L726
Falcon	1590	54	19	**YTS56RT59RS**	34.13	2.50	L729	9.10	4.07	L726
Chukar	1780	84	19	**YTS58RT48RS**	35.46	2.50	L735	9.00	4.00	L726
Bluebird	2156	84	19	**YTS59RT59RS**	42.91	2.50	L735	9.10	4.07	L726
Kiwi	2167	72	7	**YTS59RT521RS**	42.91	2.50	L735	9.00	4.00	L726

Splice Kit: Includes aluminum sleeve and steel sleeve.
* Overlap crimps.
‡ Wide dies may be used on aluminum only (no steel), add suffix "W" to part number (example: L725W).

Blue highlighted items are industry standard and most frequently ordered.

TYPES YNA-R15 & YNA-R

Compression Terminal for ACSR Conductor

Compression terminal for ACSR transmission lines up to and including 230 kV. Two hole NEMA tongue through 556.5 kcmil and four hole on larger sizes. Includes PENETROX™ joint compound in barrel and oxide retardant on pad.

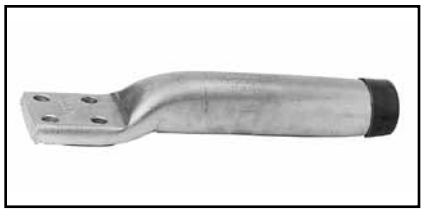

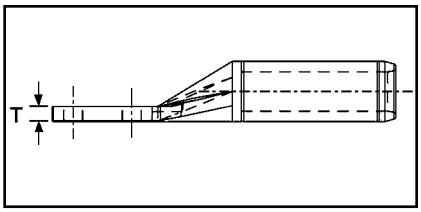

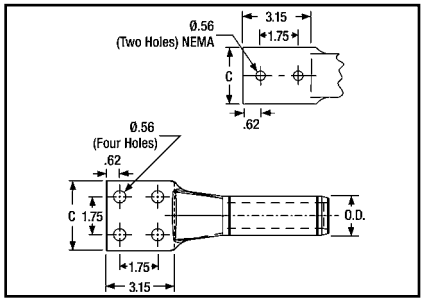

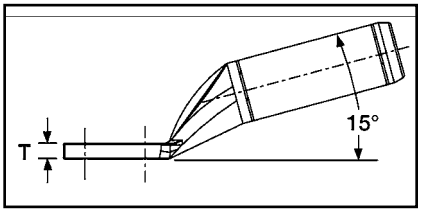

ACSR				15° Terminal		Straight Terminal		Inches		Die*‡
Conductor Name	Size kcmil	Stranding Alum.	Stranding Steel	Catalog Number	Inches L	Catalog Number	Inches L	C†	T	
Linnet	336.4	26	7	**YNA32R15**	8.92	**YNA32R**	8.96	1.68	0.39	L717
Oriole	336.4	30	7	**YNA32R15**	8.92	**YNA32R**	8.96	1.68	0.39	L717
Ibis	397.5	26	7	**YNA34R15**	9.31	**YNA34R**	9.08	1.78	0.46	L719
Flicker	477	24	7	**YNA36R15**	9.62	**YNA36R**	9.47	1.96	0.48	L720
Hawk	477	26	7	**YNA36R15**	9.62	**YNA36R**	9.47	1.96	0.48	L720
Parakeet	556.5	24	7	**YNA39R15**	10.09	**YNA39R**	9.84	2.08	0.53	L722
Dove	556.5	26	7	**YNA39R15**	10.09	**YNA39R**	9.84	2.08	0.53	L722
Peacock	605	24	7	**YNA43R15**	10.16	**YNA43R**	10.07	3.07	0.36	L724
Squab	605	26	7	**YNA43R15**	10.16	**YNA43R**	10.07	3.07	0.36	L724
Rook	636	24	7	**YNA43R15**	10.16	**YNA43R**	10.07	3.07	0.36	L724
Grosbeak	636	26	7	**YNA43R15**	10.16	**YNA43R**	10.07	3.07	0.36	L724
Flamingo	666.6	24	7	**YNA43R15**	10.16	**YNA43R**	10.07	3.07	0.36	L724
Starling	715.5	26	7	**YNA451R15**	10.21	**YNA451R**	10.28	3.22	0.45	L725
Cuckoo	795	24	7	**YNA451R15**	10.21	**YNA451R**	10.28	3.22	0.45	L725
Drake	795	26	7	**YNA451R15**	10.21	**YNA451R**	10.28	3.22	0.45	L725
Tern	795	45	7	**YNA451R15**	10.21	**YNA451R**	10.28	3.22	0.45	L725
Condor	795	54	7	**YNA451R15**	10.21	**YNA451R**	10.28	3.22	0.45	L725
Ruddy	900	45	7	**YNA49R15**	10.35	**YNA49R**	10.46	3.22	0.52	L727
Rail	954	45	7	**YNA49R15**	10.35	**YNA49R**	10.46	3.22	0.52	L727
Cardinal	954	54	7	**YNA49R15**	10.35	**YNA49R**	10.46	3.22	0.52	L727
Ortolan	1033.5	45	7	**YNA49R15**	10.35	**YNA49R**	10.46	3.22	0.52	L727
Curlew	1033.5	54	7	**YNA49R15**	10.35	**YNA49R**	10.46	3.22	0.52	L727
Bluejay	1113	45	7	**YNA49R15**	10.35	**YNA49R**	10.46	3.22	0.52	L727
Finch	1113	54	19	**YNA52R15**	12.09	**YNA52R**	12.24	3.22	0.71	L728
Bunting	1192.5	45	7	**YNA52R15**	12.09	**YNA52R**	12.24	3.22	0.71	L728
Bittern	1272	45	7	**YNA52R15**	12.09	**YNA52R**	12.24	3.22	0.71	L728
Pheasant	1272	54	19	**YNA52R15**	12.09	**YNA52R**	12.24	3.22	0.71	L728
Dipper	1351.5	45	7	**YNA52R15**	12.09	**YNA52R**	12.24	3.22	0.71	L728
Martin	1351.5	54	19	**YNA52R15**	12.09	**YNA52R**	12.24	3.22	0.71	L728
Nuthatch	1510.5	45	7	**YNA56R15**	12.50	**YNA56R**	12.74	3.44	0.81	L729
Parrot	1510.5	54	19	**YNA56R15**	12.50	**YNA56R**	12.74	3.44	0.81	L729
Lapwing	1590	45	7	**YNA56R15**	12.50	**YNA56R**	12.74	3.44	0.81	L729
Falcon	1590	54	19	**YNA56R15**	12.50	**YNA56R**	12.74	3.44	0.81	L729
Chukar	1780	84	19	**YNA58R15**	13.25	**YNA58R**	13.34	3.47	0.76	L735
Bluebird	2156	84	19	**YNA59R15**	13.12	**YNA59R**	13.25	3.57	0.61	L735
Kiwi	2167	72	7	**YNA59R15**	13.12	**YNA59R**	13.25	3.57	0.61	L735

† Two hole NEMA pads standard on conductors up to 556.5 kcmil; Four hole NEMA pads on larger conductor sizes.

To specify hardware for bolting to corresponding Deadends add the suffix H to the catalog number (example: YNA52RH).

* Overlap crimps.
‡ Wide dies may be used on aluminum only (no steel), add suffix "W" to part number (example: L725W).

Blue highlighted items are industry standard and most frequently ordered.

TYPES YNA-RT15, YNA-RT EHV

Compression Terminal for ACSR Conductor

Compression terminal for ACSR transmission lines at 345 kV and over. Two hole NEMA tongue supplied through 636 kcmil and four hole on larger sizes. Includes PENETROX™ joint compound in barrel and oxide retardant on pad.

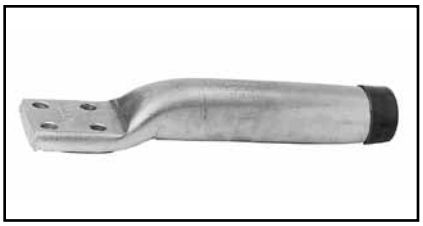

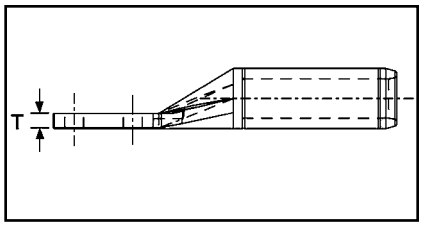

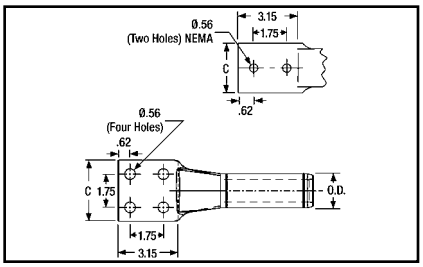

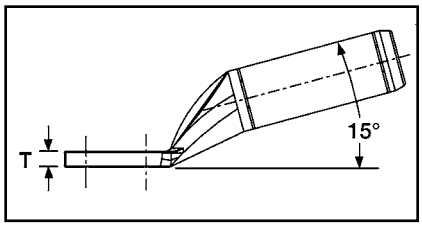

ACSR				15° Terminal		Straight Terminal		Inches		Die*‡
Conductor Name	Size kcmil	Stranding Alum.	Stranding Steel	Catalog Number	Inches L	Catalog Number	Inches L	C†	T	
Linnet	336.4	26	7	**YNA32RT15**	9.04	**YNA32RT**	9.14	1.68	0.39	L717
Oriole	336.4	30	7	**YNA32RT15**	9.04	**YNA32RT**	9.14	1.68	0.39	L717
Ibis	397.5	26	7	**YNA34RT15**	9.21	**YNA34RT**	9.3	1.78	0.46	L719
Flicker	477	24	7	**YNA36RT15**	9.63	**YNA36RT**	9.7	1.96	0.48	L720
Hawk	477	26	7	**YNA36RT15**	9.63	**YNA36RT**	9.7	1.96	0.48	L720
Parakeet	556.5	24	7	**YNA39RT15**	10.02	**YNA39RT**	10.09	2.08	0.53	L722
Dove	556.5	26	7	**YNA39RT15**	10.02	**YNA39RT**	10.09	2.08	0.53	L722
Peacock	605	24	7	**YNA43RT15**	10.21	**YNA43RT**	10.32	3.22	0.36	L724
Squab	605	26	7	**YNA43RT15**	10.21	**YNA43RT**	10.32	3.22	0.36	L724
Rook	636	24	7	**YNA43RT15**	10.21	**YNA43RT**	10.32	3.22	0.36	L724
Grosbeak	636	26	7	**YNA43RT15**	10.21	**YNA43RT**	10.32	3.22	0.36	L724
Flamingo	666.6	24	7	**YNA43RT15**	10.21	**YNA43RT**	10.32	3.22	0.36	L724
Starling	715.5	26	7	**YNA451RT15**	10.65	**YNA451RT**	10.57	3.22	0.45	L725
Cuckoo	795	24	7	**YNA451RT15**	10.65	**YNA451RT**	10.57	3.22	0.45	L725
Drake	795	26	7	**YNA451RT15**	10.65	**YNA451RT**	10.57	3.22	0.45	L725
Tern	795	45	7	**YNA451RT15**	10.65	**YNA451RT**	10.57	3.22	0.45	L725
Condor	795	54	7	**YNA451RT15**	10.65	**YNA451RT**	10.57	3.22	0.45	L725
Ruddy	900	45	7	**YNA49RT15**	10.94	**YNA49RT**	10.77	3.22	0.52	L727
Rail	954	45	7	**YNA49RT15**	10.94	**YNA49RT**	10.77	3.22	0.52	L727
Cardinal	954	54	7	**YNA49RT15**	10.94	**YNA49RT**	10.77	3.22	0.52	L727
Ortolan	1033.5	45	7	**YNA49RT15**	10.94	**YNA49RT**	10.77	3.22	0.52	L727
Curlew	1033.5	54	7	**YNA49RT15**	10.94	**YNA49RT**	10.77	3.22	0.52	L727
Bluejay	1113	45	7	**YNA49RT15**	10.94	**YNA49RT**	10.77	3.22	0.52	L727
Finch	1113	54	19	**YNA52RT15**	12.62	**YNA52RT**	13.82	3.22	0.71	L728
Bunting	1192.5	45	7	**YNA52RT15**	12.62	**YNA52RT**	13.82	3.22	0.71	L728
Bittern	1272	45	7	**YNA52RT15**	12.62	**YNA52RT**	13.82	3.22	0.71	L728
Pheasant	1272	54	19	**YNA52RT15**	12.62	**YNA52RT**	13.82	3.22	0.71	L728
Dipper	1351.5	45	7	**YNA52RT15**	12.62	**YNA52RT**	13.82	3.22	0.71	L728
Martin	1351.5	54	19	**YNA52RT15**	12.62	**YNA52RT**	13.82	3.22	0.71	L728
Nuthatch	1510.5	45	7	**YNA56RT15**	13.36	**YNA56RT**	13.76	3.44	0.86	L729
Parrot	1510.5	54	19	**YNA56RT15**	13.36	**YNA56RT**	13.76	3.44	0.86	L729
Lapwing	1590	45	7	**YNA56RT15**	13.36	**YNA56RT**	13.76	3.44	0.86	L729
Falcon	1590	54	19	**YNA56RT15**	13.36	**YNA56RT**	13.76	3.44	0.86	L729
Chukar	1780	84	19	**YNA58RT15**	14.08	**YNA58RT**	13.7	3.47	0.80	L735
Bluebird	2156	84	19	**YNA59RT15**	13.75	**YNA59RT**	13.54	3.57	0.64	L735
Kiwi	2167	72	7	**YNA59RT15**	13.75	**YNA59RT**	13.54	3.57	0.64	L735

† Two hole NEMA pads standard for conductors up to 556.5 kcmil; Four hole NEMA pads on larger conductor sizes. Shielding cap STS43A-4N required for EHV applications (two caps required).

To specify hardware for bolting to corresponding Deadends add the suffix H to catalog number (example: YNA52RTH).

* Overlap crimps.
‡ Wide dies may be used on aluminum only (no steel), add suffix "W" to part number (example: L725W).

Blue highlighted items are industry standard and most frequently ordered.

TYPE YNS-R

Jumper Loop Sleeve for ACSR Conductor

Jumper sleeve for ACSR transmission lines up to and including 230 kV. Sleeve is pre-filled with PENETROX™ joint compound and capped.

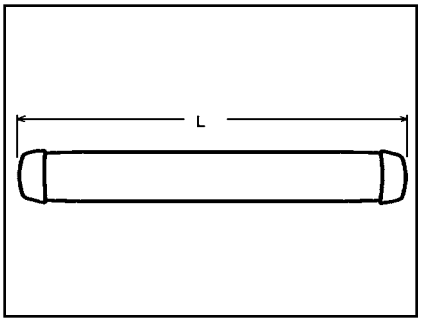

ACSR				Catalog Number	Inches		Die*‡
Conductor Name	Size kcmil	Stranding					
		Alum.	Steel		L	O.D.	
Linnet	336.4	26	7	**YNS32R**	8.60	1.19	L717
Oriole	336.4	30	7	**YNS32R**	8.60	1.19	L717
Ibis	397.5	26	7	**YNS34R**	8.68	1.30	L719
Flicker	477	24	7	**YNS36R**	9.20	1.41	L720
Hawk	477	26	7	**YNS36R**	9.20	1.41	L720
Parakeet	556.5	24	7	**YNS39R**	9.76	1.50	L722
Dove	556.5	26	7	**YNS39R**	9.76	1.50	L722
Peacock	605	24	7	**YNS43R**	9.98	1.61	L724
Squab	605	26	7	**YNS43R**	9.98	1.61	L724
Rook	636	24	7	**YNS43R**	9.98	1.61	L724
Grosbeak	636	26	7	**YNS43R**	9.98	1.61	L724
Flamingo	666.6	24	7	**YNS43R**	9.98	1.61	L724
Starling	715.5	26	7	**YNS451R**	10.00	1.80	L725
Cuckoo	795	24	7	**YNS451R**	10.00	1.80	L725
Drake	795	26	7	**YNS451R**	10.00	1.80	L725
Tern	795	45	7	**YNS451R**	10.00	1.80	L725
Condor	795	54	7	**YNS451R**	10.00	1.80	L725
Ruddy	900	45	7	**YNS49R**	10.00	1.97	L727
Rail	954	45	7	**YNS49R**	10.00	1.97	L727
Cardinal	954	54	7	**YNS49R**	10.00	1.97	L727
Ortolan	1033.5	45	7	**YNS49R**	10.00	1.97	L727
Curlew	1033.5	54	7	**YNS49R**	10.00	1.97	L727
Bluejay	1113	45	7	**YNS49R**	10.00	1.97	L727
Finch	1113	54	19	**YNS52R**	15.48	2.25	L728
Bunting	1192.5	45	7	**YNS52R**	15.48	2.25	L728
Bittern	1272	45	7	**YNS52R**	15.48	2.25	L728
Pheasant	1272	54	19	**YNS52R**	15.48	2.25	L728
Dipper	1351.5	45	7	**YNS52R**	15.48	2.25	L728
Martin	1351.5	54	19	**YNS52R**	15.48	2.25	L728
Nuthatch	1510.5	45	7	**YNS56R**	14.80	2.50	L729
Parrot	1510.5	54	19	**YNS56R**	14.80	2.50	L729
Lapwing	1590	45	7	**YNS56R**	14.80	2.50	L729
Falcon	1590	54	19	**YNS56R**	14.80	2.50	L729
Chukar	1780	84	19	**YNS58R**	14.74	2.50	L735
Bluebird	2156	84	19	**YNS59R**	14.56	2.50	L735
Kiwi	2167	72	7	**YNS59R**	14.56	2.50	L735

* Overlap crimps.
‡ Wide dies may be used on aluminum only, add suffix "W" to part number (example: L725W).

Blue highlighted items are industry standard and most frequently ordered.

TYPE YNS-RT EHV

Jumper Loop Sleeve for ACSR Conductor

Jumper sleeve for ACSR transmission lines over 230 kV. Sleeve is pre-filled with PENETROX™ joint compound and capped.

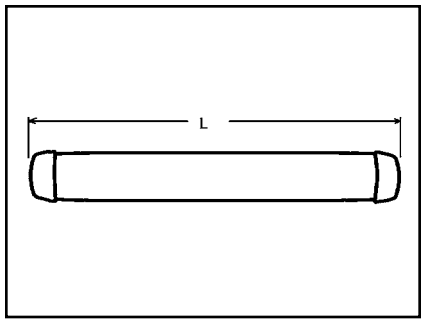

ACSR				Jumper Sleeve	Inches		Die*‡
Conductor Name	Size kcmil	Stranding					
		Alum.	Steel		L	O.D.	
Linnet	336.4	26	7	**YNS32RT**	8.96	1.19	L717
Oriole	336.4	30	7	**YNS32RT**	8.96	1.19	L717
Ibis	397.5	26	7	**YNS34RT**	9.10	1.30	L719
Flicker	477	24	7	**YNS36RT**	9.64	1.41	L720
Hawk	477	26	7	**YNS36RT**	9.64	1.41	L720
Parakeet	556.5	24	7	**YNS39RT**	10.26	1.50	L722
Dove	556.5	26	7	**YNS39RT**	10.26	1.50	L722
Peacock	605	24	7	**YNS43RT**	10.48	1.61	L724
Squab	605	26	7	**YNS43RT**	10.48	1.61	L724
Rook	636	24	7	**YNS43RT**	10.48	1.61	L724
Grosbeak	636	26	7	**YNS43RT**	10.48	1.61	L724
Flamingo	666.6	24	7	**YNS43RT**	10.48	1.61	L724
Starling	715.5	26	7	**YNS451RT**	10.60	1.80	L725
Cuckoo	795	24	7	**YNS451RT**	10.60	1.80	L725
Drake	795	26	7	**YNS451RT**	10.60	1.80	L725
Tern	795	45	7	**YNS451RT**	10.60	1.80	L725
Condor	795	54	7	**YNS451RT**	10.60	1.80	L725
Ruddy	900	45	7	**YNS49RT**	10.66	1.97	L727
Rail	954	45	7	**YNS49RT**	10.66	1.97	L727
Cardinal	954	54	7	**YNS49RT**	10.66	1.97	L727
Ortolan	1033.5	45	7	**YNS49RT**	10.66	1.97	L727
Curlew	1033.5	54	7	**YNS49RT**	10.66	1.97	L727
Bluejay	1113	45	7	**YNS49RT**	10.66	1.97	L727
Finch	1113	54	19	**YNS52RT**	16.20	2.25	L728
Bunting	1192.5	45	7	**YNS52RT**	16.20	2.25	L728
Bittern	1272	45	7	**YNS52RT**	16.20	2.25	L728
Pheasant	1272	54	19	**YNS52RT**	16.20	2.25	L728
Dipper	1351.5	45	7	**YNS52RT**	16.20	2.25	L728
Martin	1351.5	54	19	**YNS52RT**	16.20	2.25	L728
Nuthatch	1510.5	45	7	**YNS56RT**	15.58	2.50	L729
Parrot	1510.5	54	19	**YNS56RT**	15.58	2.50	L729
Lapwing	1590	45	7	**YNS56RT**	15.58	2.50	L729
Falcon	1590	54	19	**YNS56RT**	15.58	2.50	L729
Chukar	1780	84	19	**YNS58RT**	15.46	2.50	L735
Bluebird	2156	84	19	**YNS59RT**	15.14	2.50	L735
Kiwi	2167	72	7	**YNS59RT**	15.14	2.50	L735

* Overlap crimps.
‡ Wide dies may be used on aluminum only, add suffix "W" to part number (example: L725W).

Blue highlighted items are industry standard and most frequently ordered.

TYPE YNT-R-R

Compression T-Tap for ACSR Conductor

Two piece compression T-Tap for ACSR transmission lines that include up to 230 kV. Tap element is pre-filled with PENETROX™ joint compound and sealed.

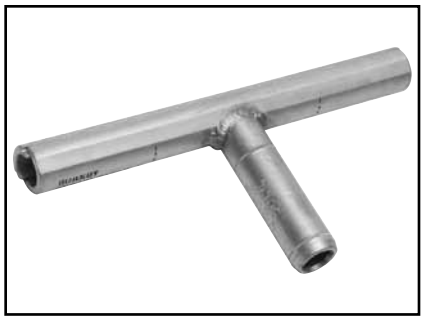

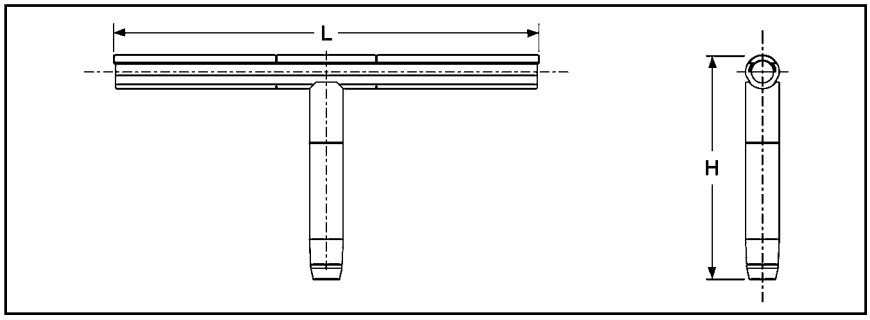

ACSR				T-Tap*	Inches		Die **‡
Conductor Name	Size kcmil	Stranding			L	H	
		Alum.	Steel				
Linnet	336.4	26	7	**YNT32R32R**	15.46	6.39	L717
Oriole	336.4	30	7	**YNT32R32R**	15.46	6.39	L717
Ibis	397.5	26	7	**YNT34R34R**	15.60	6.53	L719
Flicker	477	24	7	**YNT36R36R**	16.29	6.85	L720
Hawk	477	26	7	**YNT36R36R**	16.29	6.85	L720
Parakeet	556.5	24	7	**YNT39R39R**	16.69	7.13	L722
Dove	556.5	26	7	**YNT39R39R**	16.69	7.13	L722
Peacock	605	24	7	**YNT43R43R**	17.48	7.20	L724
Squab	605	26	7	**YNT43R43R**	17.48	7.20	L724
Rook	636	24	7	**YNT43R43R**	17.48	7.20	L724
Grosbeak	636	26	7	**YNT43R43R**	17.48	7.20	L724
Flamingo	666.6	24	7	**YNT43R43R**	17.48	7.20	L724
Starling	715.5	26	7	**YNT451R451R**	17.60	7.70	L725
Cuckoo	795	24	7	**YNT451R451R**	17.60	7.70	L725
Drake	795	26	7	**YNT451R451R**	17.60	7.70	L725
Tern	795	45	7	**YNT451R451R**	17.60	7.70	L725
Condor	795	54	7	**YNT451R451R**	17.60	7.70	L725
Ruddy	900	45	7	**YNT49R49R**	17.66	7.90	L727
Rail	954	45	7	**YNT49R49R**	17.66	7.90	L727
Cardinal	954	54	7	**YNT49R49R**	17.66	7.90	L727
Ortolan	1033.5	45	7	**YNT49R49R**	17.66	7.90	L727
Curlew	1033.5	54	7	**YNT49R49R**	17.66	7.90	L727
Bluejay	1113	45	7	**YNT49R49R**	17.66	7.90	L727
Finch	1113	54	19	**YNT52R52R**	21.61	11.10	L728
Bunting	1192.5	45	7	**YNT52R52R**	21.61	11.10	L728
Bittern	1272	45	7	**YNT52R52R**	21.61	11.10	L728
Pheasant	1272	54	19	**YNT52R52R**	21.61	11.10	L728
Dipper	1351.5	45	7	**YNT52R52R**	21.61	11.10	L728
Martin	1351.5	54	19	**YNT52R52R**	21.61	11.10	L728
Nuthatch	1510.5	45	7	**YNT56R56R**	23.65	11.08	L729
Parrot	1510.5	54	19	**YNT56R56R**	23.65	11.08	L729
Lapwing	1590	45	7	**YNT56R56R**	23.65	11.08	L729
Falcon	1590	54	19	**YNT56R56R**	23.65	11.08	L729
Chukar	1780	84	19	**YNT58R58R**	23.53	11.02	L735
Bluebird	2156	84	19	**YNT59R59R**	23.21	10.86	L735
Kiwi	2167	72	7	**YNT59R59R**	23.21	10.86	L735

* For EHV applications, add suffix "T" to catalog number (example: YNT49R49RT).
** Overlap crimps.
‡ Wide dies may be used on aluminum only, add suffix "W" to part number (example: L725W).

Blue highlighted items are industry standard and most frequently ordered.

TYPE YNTA-R

T-Tap with Pad for ACSR Conductor

Two piece compression T-Tap to a NEMA pad for ACSR transmission lines. Up to and including 230 kV.

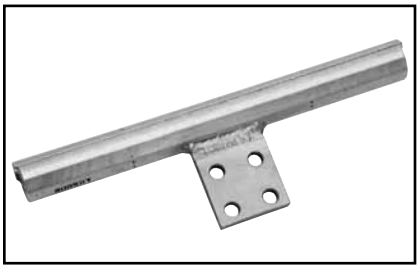

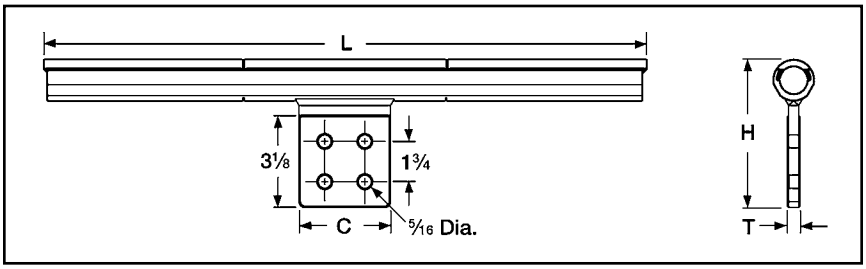

ACSR				T-Tap with Pad	Inches				Die *‡
Conductor Name	Size kcmil	Stranding			L	C	H	T	
		Alum.	Steel						
Linnet	336.4	26	7	**YNTA32R**	15.46	2.00	4.94	0.50	L717
Oriole	336.4	30	7	**YNTA32R**	15.46	2.00	4.94	0.50	L717
Ibis	397.5	26	7	**YNTA34R**	15.60	2.00	5.05	0.50	L719
Flicker	477	24	7	**YNTA36R**	16.29	2.25	5.16	0.56	L720
Hawk	477	26	7	**YNTA36R**	16.29	2.25	5.16	0.56	L720
Parakeet	556.5	24	7	**YNTA39R**	16.69	2.25	5.25	0.56	L722
Dove	556.5	26	7	**YNTA39R**	16.69	2.25	5.25	0.56	L722
Peacock	605	24	7	**YNTA43R**	17.48	3.25	5.36	0.56	L724
Squab	605	26	7	**YNTA43R**	17.48	3.25	5.36	0.56	L724
Rook	636	24	7	**YNTA43R**	17.48	3.25	5.36	0.56	L724
Grosbeak	636	26	7	**YNTA43R**	17.48	3.25	5.36	0.56	L724
Flamingo	666.6	24	7	**YNTA43R**	17.48	3.25	5.36	0.56	L724
Starling	715.5	26	7	**YNTA451R**	17.60	3.25	5.55	0.56	L725
Cuckoo	795	24	7	**YNTA451R**	17.60	3.25	5.55	0.56	L725
Drake	795	26	7	**YNTA451R**	17.60	3.25	5.55	0.56	L725
Tern	795	45	7	**YNTA451R**	17.60	3.25	5.55	0.56	L725
Condor	795	54	7	**YNTA451R**	17.60	3.25	5.55	0.56	L725
Ruddy	900	45	7	**YNTA49R**	17.66	3.25	5.72	0.56	L727
Rail	954	45	7	**YNTA49R**	17.66	3.25	5.72	0.56	L727
Cardinal	954	54	7	**YNTA49R**	17.66	3.25	5.72	0.56	L727
Ortolan	1033.5	45	7	**YNTA49R**	17.66	3.25	5.72	0.56	L727
Curlew	1033.5	54	7	**YNTA49R**	17.66	3.25	5.72	0.56	L727
Bluejay	1113	45	7	**YNTA49R**	17.66	3.25	5.72	0.56	L727
Finch	1113	54	19	**YNTA54R**	21.61	3.25	6.00	0.69	L728
Bunting	1192.5	45	7	**YNTA54R**	21.61	3.25	6.00	0.69	L728
Bittern	1272	45	7	**YNTA54R**	21.61	3.25	6.00	0.69	L728
Pheasant	1272	54	19	**YNTA54R**	21.61	3.25	6.00	0.69	L728
Dipper	1351.5	45	7	**YNTA54R**	21.61	3.25	6.00	0.69	L728
Martin	1351.5	54	19	**YNTA54R**	21.61	3.25	6.00	0.69	L728
Nuthatch	1510.5	45	7	**YNTA56R**	23.65	3.59	6.25	0.69	L729
Parrot	1510.5	54	19	**YNTA56R**	23.65	3.59	6.25	0.69	L729
Lapwing	1590	45	7	**YNTA56R**	23.65	3.59	6.25	0.69	L729
Falcon	1590	54	19	**YNTA56R**	23.65	3.59	6.25	0.69	L729
Chukar	1780	84	19	**YNTA58R**	23.53	3.59	6.25	0.69	L735
Bluebird	2156	84	19	**YNTA59R**	23.21	3.59	6.25	0.69	L735
Kiwi	2167	72	7	**YNTA59R**	23.21	3.59	6.25	0.69	L735

Two hole NEMA pads standard for conductors up to 556.5 kcmil; Four hole NEMA pads on larger conductor sizes.

For EVH applications, add suffix "T" to catalog number (example: YNTA49RT).

For EHV applications (2) two tap pad shielding caps (catalog number STS43A4N) should be ordered.
* Overlap crimps.
‡ Wide dies may be used on aluminum only, add suffix "W" to part number (example: L725W).

Blue highlighted items are industry standard and most frequently ordered.

TYPE YNU-R

Repair Sleeve for ACSR Conductor

For HV and EHV applications. Two-piece repair sleeve for temporary restoration of conductivity to damaged ACSR transmission lines. Use of PENETROX™ joint compound required.

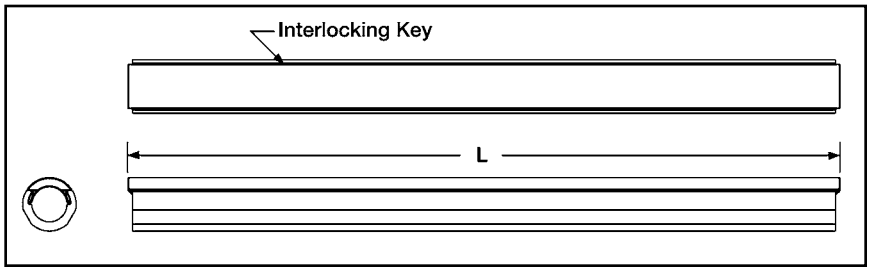

ACSR				Repair Sleeve	Inches	Die **‡
Conductor Name	Size kcmil	Stranding			L	
		Alum.	Steel			
Linnet	336.4	26	7	**YNU32R**	14.00	L717
Oriole	336.4	30	7	**YNU32R**	14.00	L717
Ibis	397.5	26	7	**YNU34R**	14.00	L719
Flicker	477	24	7	**YNU36R**	14.00	L720
Hawk	477	26	7	**YNU36R**	14.00	L720
Parakeet	556.5	24	7	**YNU39R**	16.00	L722
Dove	556.5	26	7	**YNU39R**	16.00	L722
Peacock	605	24	7	**YNU43R**	16.00	L724
Squab	605	26	7	**YNU43R**	16.00	L724
Rook	636	24	7	**YNU43R**	16.00	L724
Grosbeak	636	26	7	**YNU43R**	16.00	L724
Flamingo	666.6	24	7	**YNU43R**	16.00	L724
Starling	715.5	26	7	**YNU451R**	16.00	L725
Cuckoo	795	24	7	**YNU451R**	16.00	L725
Drake	795	26	7	**YNU451R**	16.00	L725
Tern	795	45	7	**YNU451R**	16.00	L725
Condor	795	54	7	**YNU451R**	16.00	L725
Ruddy	900	45	7	**YNU49R**	16.00	L727
Rail	954	45	7	**YNU49R**	16.00	L727
Cardinal	954	54	7	**YNU49R**	16.00	L727
Ortolan	1033.5	45	7	**YNU49R**	16.00	L727
Curlew	1033.5	54	7	**YNU49R**	16.00	L727
Bluejay	1113	45	7	**YNU49R**	16.00	L727
Finch	1113	54	19	**YNU54R**	16.00	L728
Bunting	1192.5	45	7	**YNU54R**	16.00	L728
Bittern	1272	45	7	**YNU54R**	16.00	L728
Pheasant	1272	54	19	**YNU54R**	16.00	L728
Dipper	1351.5	45	7	**YNU54R**	16.00	L728
Martin	1351.5	54	19	**YNU54R**	16.00	L728
Nuthatch	1510.5	45	7	**YNU56R**	19.00	L729
Parrot	1510.5	54	19	**YNU56R**	19.00	L729
Lapwing	1590	45	7	**YNU56R**	19.00	L729
Falcon	1590	54	19	**YNU56R**	19.00	L729
Chukar	1780	84	19	**YNU58R**	19.00	L735
Bluebird	2156	84	19	**YNU59R**	19.00	L735
Kiwi	2167	72	7	**YNU59R**	19.00	L735

* Overlap crimps.
‡ Wide dies may be used on aluminum only, add suffix "W" to part number (example: L725W).

Blue highlighted items are industry standard and most frequently ordered.

TYPES YTW-R-REKHT, YTW-RHT, YTW-REHT, BYNA-R-HHT

Single Pad Full Tension Deadend for ACSS Conductor

Full tension compression deadend for 250º C rated ACSS transmission lines up to and including 230 kV. Standard 15º NEMA tap pad provides either 0º or 30º tap when BYNA-R15 terminal is used.

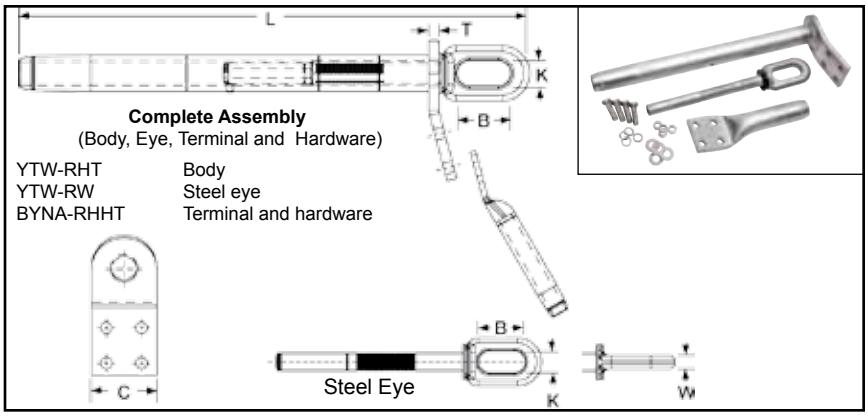

ACSS				Single Pad		Inches			Body Die*‡	Steel Eye	Inches			Eye Die*	Terminal † with Hardware	Term Die*‡
Conductor Name	Size kcmil	Stranding Alum.	Stranding Steel	Complete Assembly	Alum. Body	L	C	T			B	K	W			
Linnet	336.4	26	7	**YTW32R34REKHT**	**YTW32RHT**	21.53	3.25	0.50	L717	**YTW34REHT**	2.50	0.88	0.62	L718	**BYNA32R15HHT**	L717
Oriole	336.4	30	7	**YTW32R33REKHT**	**YTW32RHT**	21.53	3.25	0.50	L717	**YTW33REHT**	2.50	0.88	0.62	L718	**BYNA32R15HHT**	L717
Ibis	397.5	26	7	**YTW34R34REKHT**	**YTW34RHT**	21.60	3.25	0.50	L719	**YTW34REHT**	2.50	0.88	0.62	L718	**BYNA34R15HHT**	L719
Flicker	477	24	7	**YTW36R362REKHT**	**YTW36RHT**	23.41	3.25	0.50	L720	**YTW362REHT**	2.50	0.88	0.62	L721	**BYNA36R15HHT**	L720
Hawk	477	26	7	**YTW36R36REKHT**	**YTW36RHT**	23.41	3.25	0.50	L720	**YTW36REHT**	2.50	0.88	0.62	L721	**BYNA36R15HHT**	L720
Parakeet	556.5	24	7	**YTW39R43REKHT**	**YTW39RHT**	23.66	3.25	0.50	L722	**YTW43REHT**	2.50	0.88	0.69	L723	**BYNA39R15HHT**	L722
Dove	556.5	26	7	**YTW39R43REKHT**	**YTW39RHT**	23.66	3.25	0.50	L722	**YTW43REHT**	2.50	0.88	0.69	L723	**BYNA39R15HHT**	L722
Peacock	605	24	7	**YTW43R43REKHT**	**YTW43RHT**	24.49	3.25	0.50	L724	**YTW43REHT**	2.50	0.88	0.69	L723	**BYNA43R15HHT**	L724
Squab	605	26	7	**YTW43R43REKHT**	**YTW43RHT**	24.49	3.25	0.50	L724	**YTW43REHT**	2.50	0.88	0.69	L723	**BYNA43R15HHT**	L724
Rook	636	24	7	**YTW43R43REKHT**	**YTW43RHT**	24.49	3.25	0.50	L724	**YTW43REHT**	2.50	0.88	0.69	L723	**BYNA43R15HHT**	L724
Grosbeak	636	26	7	**YTW43R43REKHT**	**YTW43RHT**	24.49	3.25	0.50	L724	**YTW43REHT**	2.50	0.88	0.69	L723	**BYNA43R15HHT**	L724
Flamingo	666.6	24	7	**YTW43R43REKHT**	**YTW43RHT**	24.49	3.25	0.50	L724	**YTW43REHT**	2.50	0.88	0.69	L723	**BYNA43R15HHT**	L724
Starling	715.5	26	7	**YTW451R48REKHT**	**YTW451RHT**	29.41	3.25	0.50	L725	**YTW48REHT**	2.69	1.25	0.75	L726	**BYNA451R15HHT**	L725
Cuckoo	795	24	7	**YTW451R45REKHT**	**YTW451RHT**	29.41	3.25	0.50	L725	**YTW45REHT**	2.69	1.25	0.75	L726	**BYNA451R15HHT**	L725
Drake	795	26	7	**YTW451R48REKHT**	**YTW451RHT**	29.41	3.25	0.50	L725	**YTW48REHT**	2.69	1.25	0.75	L726	**BYNA451R15HHT**	L725
Tern	795	45	7	**YTW451R481REKHT**	**YTW451RHT**	29.41	3.25	0.50	L725	**YTW481REHT**	2.69	1.25	0.75	L726	**BYNA451R15HHT**	L725
Condor	795	54	7	**YTW451R45REKHT**	**YTW451RHT**	29.41	3.25	0.50	L725	**YTW45REHT**	2.69	1.25	0.75	L726	**BYNA451R15HHT**	L725
Ruddy	900	45	7	**YTW48R481REKHT**	**YTW48RHT**	29.50	3.25	0.50	L727	**YTW481REHT**	2.69	1.25	0.75	L726	**BYNA49R15HHT**	L727
Rail	954	45	7	**YTW48R481REKHT**	**YTW48RHT**	29.50	3.25	0.50	L727	**YTW481REHT**	2.69	1.25	0.75	L726	**BYNA49R15HHT**	L727
Cardinal	954	54	7	**YTW48R48REKHT**	**YTW48RHT**	29.50	3.25	0.50	L727	**YTW48REHT**	2.69	1.25	0.75	L726	**BYNA49R15HHT**	L727
Ortolan	1033.5	45	7	**YTW49R483REKHT**	**YTW49RHT**	31.35	3.25	0.50	L727	**YTW483REHT**	2.69	1.25	1.00	L726	**BYNA49R15HHT**	L727
Curlew	1033.5	54	7	**YTW49R50REKHT**	**YTW49RHT**	31.35	3.25	0.50	L727	**YTW50REHT**	2.69	1.25	1.00	L726	**BYNA49R15HHT**	L727
Bluejay	1113	45	7	**YTW49R483REKHT**	**YTW49RHT**	31.35	3.25	0.50	L727	**YTW483REHT**	2.69	1.25	1.00	L726	**BYNA49R15HHT**	L727
Finch	1113	54	19	**YTW52R50REKHT**	**YTW52RHT**	35.55	3.25	0.50	L728	**YTW50REHT**	2.69	1.25	1.00	L726	**BYNA52R15HHT**	L728
Bunting	1192.5	45	7	**YTW52R521REKHT**	**YTW52RHT**	35.55	4.00	0.62	L728	**YTW521REHT**	2.69	1.25	1.00	L726	**BYNA52R15HHT**	L728
Bittern	1272	45	7	**YTW52R521REKHT**	**YTW52RHT**	35.55	4.00	0.62	L728	**YTW521REHT**	2.69	1.25	1.00	L726	**BYNA52R15HHT**	L728
Pheasant	1272	54	19	**YTW52R56REKHT**	**YTW52RHT**	35.55	4.00	0.62	L728	**YTW56REHT**	2.69	1.25	1.00	L726	**BYNA52R15HHT**	L728
Dipper	1351.5	45	7	**YTW52R521REKHT**	**YTW52RHT**	35.55	4.00	0.62	L728	**YTW521REHT**	2.69	1.25	1.00	L726	**BYNA52R15HHT**	L728
Martin	1351.5	54	19	**YTW52R56REKHT**	**YTW52RHT**	35.55	4.00	0.62	L728	**YTW56REHT**	2.69	1.25	1.00	L726	**BYNA52R15HHT**	L728
Nuthatch	1510.5	45	7	**YTW549R521REKHT**	**YTW549RHT**	35.55	4.00	0.62	L729	**YTW521REHT**	2.69	1.25	1.00	L726	**BYNA56R15HHT**	L729
Parrot	1510.5	54	19	**YTW549R56REKHT**	**YTW549RHT**	35.55	4.00	0.62	L729	**YTW56REHT**	2.69	1.25	1.00	L726	**BYNA56R15HHT**	L729
Lapwing	1590	45	7	**YTW549R549REKHT**	**YTW549RHT**	35.55	4.00	0.62	L729	**YTW549REHT**	2.69	1.25	1.00	L726	**BYNA56R15HHT**	L729
Falcon	1590	54	19	**YTW56R590REKHT**	**YTW56RHT**	35.99	4.00	0.62	L729	**YTW590REHT**	2.69	1.25	1.00	L726	**BYNA56R15HHT**	L729
Chukar	1780	84	19	**YTW58R58REKHT**	**YTW58RHT**	36.99	4.00	0.62	L735	**YTW58REHT**	2.69	1.25	1.00	L726	**BYNA58R15HHT**	L735
Bluebird	2156	84	19	**YTW59R59REKHT**	**YTW59RHT**	37.34	4.00	0.62	L735	**YTW59REHT**	2.69	1.25	1.00	L726	**BYNA59R15HHT**	L735
Kiwi	2167	72	7	**YTW59R591REKHT**	**YTW59RHT**	37.34	4.00	0.62	L735	**YTW591REHT**	2.69	1.25	1.00	L726	**BYNA59R15HHT**	L735

Complete Assembly: Includes Aluminum body, Steel eye, 15 degree terminal and aluminum hardware. For stainless steel hardware add SS to end of catalog number for complete assembly (example: YTW32R34REKHTSS) or to terminal (BYNA32R15HTSSHHTSS) if ordered separately.

For assembly without terminal and hardware add NT to end of complete assembly catalog number (example: YTW32R34REKHTNT).
† BYNA terminals must be crimped from cable end moving toward pad end.

* Overlap crimps.
‡ Wide dies may be used on aluminum only (no steel), add suffix "W" to part number (example: L725W).

Blue highlighted items are industry standard and most frequently ordered.

TYPES YTW-RD-REKHT, YTW-RDHT, YTW-REHT, BYNA-R-HHT

Double Pad Full Tension Deadend for ACSS Conductor

Full tension compression deadend for 250° C rated ACSS transmission lines up to and including 230 kV. Standard 15° NEMA tap pads provide either 0° or 30° tap when BYNAR15 terminal is used.

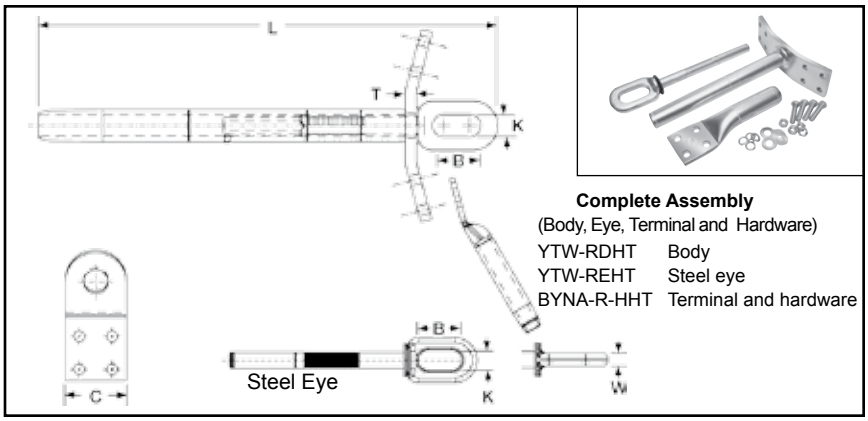

ACSS				Double Pad		Inches			Body Die*‡	Steel Eye	Inches			Eye Die*	Terminal † with Hardware	Term Die*‡
Conductor Name	Size kcmil	Stranding Alum.	Stranding Steel	Complete Assembly	Alum. Body	L	C	T			B	K	W			
Linnet	336.4	26	7	**YTW32RD34REKHT**	**YTW32RDHT**	21.53	3.25	0.50	L717	**YTW34REHT**	2.50	0.88	0.62	L718	**BYNA32R15HHT**	L717
Oriole	336.4	30	7	**YTW32RD33REKHT**	**YTW32RDHT**	21.53	3.25	0.50	L717	**YTW33REHT**	2.50	0.88	0.62	L718	**BYNA32R15HHT**	L717
Ibis	397.5	26	7	**YTW34RD34REKHT**	**YTW34RDHT**	21.60	3.25	0.50	L719	**YTW34REHT**	2.50	0.88	0.62	L718	**BYNA34R15HHT**	L719
Flicker	477	24	7	**YTW36RD362REKHT**	**YTW36RDHT**	23.41	3.25	0.50	L720	**YTW362REHT**	2.50	0.88	0.62	L721	**BYNA36R15HHT**	L720
Hawk	477	26	7	**YTW36RD36REKHT**	**YTW36RDHT**	23.41	3.25	0.50	L720	**YTW36REHT**	2.50	0.88	0.62	L721	**BYNA36R15HHT**	L720
Parakeet	556.5	24	7	**YTW39RD43REKHT**	**YTW39RDHT**	23.66	3.25	0.50	L722	**YTW43REHT**	2.50	0.88	0.69	L723	**BYNA39R15HHT**	L722
Dove	556.5	26	7	**YTW39RD43REKHT**	**YTW39RDHT**	23.66	3.25	0.50	L722	**YTW43REHT**	2.50	0.88	0.69	L723	**BYNA39R15HHT**	L722
Peacock	605	24	7	**YTW43RD43REKHT**	**YTW43RDHT**	24.49	3.25	0.50	L724	**YTW43REHT**	2.50	0.88	0.69	L723	**BYNA43R15HHT**	L724
Squab	605	26	7	**YTW43RD43REKHT**	**YTW43RDHT**	24.49	3.25	0.50	L724	**YTW43REHT**	2.50	0.88	0.69	L723	**BYNA43R15HHT**	L724
Rook	636	24	7	**YTW43RD43REKHT**	**YTW43RDHT**	24.49	3.25	0.50	L724	**YTW43REHT**	2.50	0.88	0.69	L723	**BYNA43R15HHT**	L724
Grosbeak	636	26	7	**YTW43RD43REKHT**	**YTW43RDHT**	24.49	3.25	0.50	L724	**YTW43REHT**	2.50	0.88	0.69	L723	**BYNA43R15HHT**	L724
Flamingo	666.6	24	7	**YTW43RD43REKHT**	**YTW43RDHT**	24.49	3.25	0.50	L724	**YTW43REHT**	2.50	0.88	0.69	L723	**BYNA43R15HHT**	L724
Starling	715.5	26	7	**YTW451RD48REKHT**	**YTW451RDHT**	29.41	3.25	0.50	L725	**YTW48REHT**	2.69	1.25	0.75	L726	**BYNA451R15HHT**	L725
Cuckoo	795	24	7	**YTW451RD45REKHT**	**YTW451RDHT**	29.41	3.25	0.50	L725	**YTW45REHT**	2.69	1.25	0.75	L726	**BYNA451R15HHT**	L725
Drake	795	26	7	**YTW451RD48REKHT**	**YTW451RDHT**	29.41	3.25	0.50	L725	**YTW48REHT**	2.69	1.25	0.75	L726	**BYNA451R15HHT**	L725
Tern	795	45	7	**YTW451RD481REKHT**	**YTW451RDHT**	29.41	3.25	0.50	L725	**YTW481REHT**	2.69	1.25	0.75	L726	**BYNA451R15HHT**	L725
Condor	795	54	7	**YTW451RD45REKHT**	**YTW451RDHT**	29.41	3.25	0.50	L725	**YTW45REHT**	2.69	1.25	0.75	L726	**BYNA451R15HHT**	L725
Ruddy	900	45	7	**YTW48RD481REKHT**	**YTW48RDHT**	29.50	3.25	0.50	L727	**YTW481REHT**	2.69	1.25	0.75	L726	**BYNA49R15HHT**	L727
Rail	954	45	7	**YTW48RD481REKHT**	**YTW48RDHT**	29.50	3.25	0.50	L727	**YTW481REHT**	2.69	1.25	0.75	L726	**BYNA49R15HHT**	L727
Cardinal	954	54	7	**YTW48RD48REKHT**	**YTW48RDHT**	29.50	3.25	0.50	L727	**YTW48REHT**	2.69	1.25	0.75	L726	**BYNA49R15HHT**	L727
Ortolan	1033.5	45	7	**YTW49RD483REKHT**	**YTW49RDHT**	31.35	3.25	0.50	L727	**YTW483REHT**	2.69	1.25	1.00	L726	**BYNA49R15HHT**	L727
Curlew	1033.5	54	7	**YTW49RD50REKHT**	**YTW49RDHT**	31.35	3.25	0.50	L727	**YTW50REHT**	2.69	1.25	1.00	L726	**BYNA49R15HHT**	L727
Bluejay	1113	45	7	**YTW49RD483REKHT**	**YTW49RDHT**	31.35	3.25	0.50	L727	**YTW483REHT**	2.69	1.25	1.00	L726	**BYNA49R15HHT**	L727
Finch	1113	54	19	**YTW52RD50REKHT**	**YTW52RDHT**	35.55	3.25	0.50	L728	**YTW50REHT**	2.69	1.25	1.00	L726	**BYNA52R15HHT**	L728
Bunting	1192.5	45	7	**YTW52RD521REKHT**	**YTW52RDHT**	35.55	4.00	0.62	L728	**YTW521REHT**	2.69	1.25	1.00	L726	**BYNA52R15HHT**	L728
Bittern	1272	45	7	**YTW52RD521REKHT**	**YTW52RDHT**	35.55	4.00	0.62	L728	**YTW521REHT**	2.69	1.25	1.00	L726	**BYNA52R15HHT**	L728
Pheasant	1272	54	19	**YTW52RD56REKHT**	**YTW52RDHT**	35.55	4.00	0.62	L728	**YTW56REHT**	2.69	1.25	1.00	L726	**BYNA52R15HHT**	L728
Dipper	1351.5	45	7	**YTW52RD521REKHT**	**YTW52RDHT**	35.55	4.00	0.62	L728	**YTW521REHT**	2.69	1.25	1.00	L726	**BYNA52R15HHT**	L728
Martin	1351.5	54	19	**YTW52RD56REKHT**	**YTW52RDHT**	35.55	4.00	0.62	L728	**YTW56REHT**	2.69	1.25	1.00	L726	**BYNA52R15HHT**	L728
Nuthatch	1510.5	45	7	**YTW549RD521REKHT**	**YTW549RDHT**	35.55	4.00	0.62	L729	**YTW521REHT**	2.69	1.25	1.00	L726	**BYNA56R15HHT**	L729
Parrot	1510.5	54	19	**YTW549RD56REKHT**	**YTW549RDHT**	35.55	4.00	0.62	L729	**YTW56REHT**	2.69	1.25	1.00	L726	**BYNA56R15HHT**	L729
Lapwing	1590	45	7	**YTW549RD549REKHT**	**YTW549RDHT**	35.55	4.00	0.62	L729	**YTW549REHT**	2.69	1.25	1.00	L726	**BYNA56R15HHT**	L729
Falcon	1590	54	19	**YTW56RD590REKHT**	**YTW56RDHT**	35.99	4.00	0.62	L729	**YTW590REHT**	2.69	1.25	1.00	L726	**BYNA56R15HHT**	L729
Chukar	1780	84	19	**YTW58RD58REKHT**	**YTW58RDHT**	36.99	4.00	0.62	L735	**YTW58REHT**	2.69	1.25	1.00	L726	**BYNA58R15HHT**	L735
Bluebird	2156	84	19	**YTW59RD59REKHT**	**YTW59RDHT**	37.34	4.00	0.62	L735	**YTW59REHT**	2.69	1.25	1.00	L726	**BYNA59R15HHT**	L735
Kiwi	2167	72	7	**YTW59RD591REKHT**	**YTW59RDHT**	37.34	4.00	0.62	L735	**YTW591REHT**	2.69	1.25	1.00	L726	**BYNA59R15HHT**	L735

Complete Assembly: Includes Aluminum body, Steel eye, 15 degree terminal and aluminum hardware. For stainless steel hardware add SS to end of catalog number for complete assembly (example: YTW32R34REKHTSS) or to terminal (BYNA32R15HTSSHHTSS) if ordered separately.

For assembly without terminal and hardware add NT to end of complete assembly catalog number (example: YTW32R34REKHTNT).
† BYNA terminals must be crimped from cable end moving toward pad end.

* Overlap crimps.
‡ Wide dies may be used on aluminum only (no steel), add suffix "W" to part number (example: L725W).

Blue highlighted items are industry standard and most frequently ordered.

TYPES YTW-RT-REKHT, YTW-RTHT, YTW-REHT, BYNA-RT-HHT EHV

Single Pad, EHV Full Tension Deadend for ACSS Conductor

Full tension compression deadend for 250º C rated ACSS transmission lines at 345 kV and over. Standard 15º NEMA tap pad provides either 0º or 30º tap when BYNA-RT15 terminal is used.

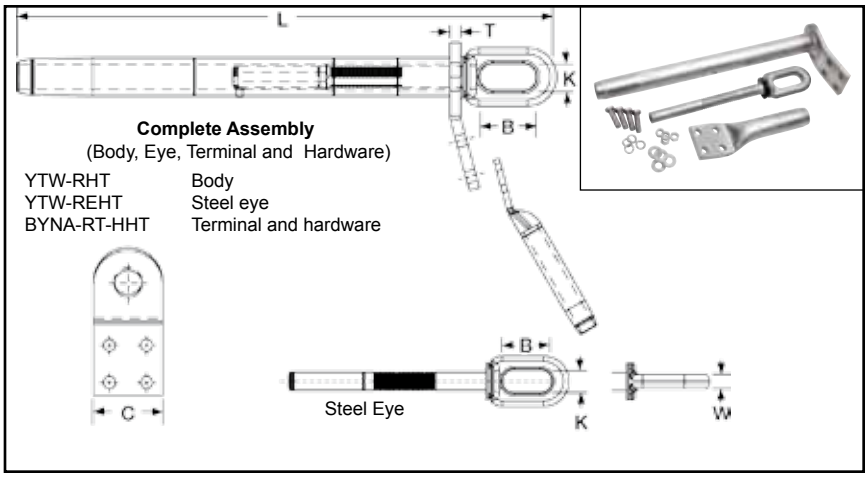

ACSS				Single Pad		Inches			Body Die*‡	Steel Eye	Inches			Eye Die*	Terminal † with Hardware	Term Die*‡
Conductor Name	Size kcmil	Stranding Alum.	Stranding Steel	Complete Assembly	Alum. Body	L	C	T			B	K	W			
Linnet	336.4	26	7	**YTW32RT34REKHT**	**YTW32RTHT**	21.53	3.25	0.50	L717	**YTW34REHT**	2.50	0.88	0.62	L718	**BYNA32RT15HHT**	L717
Oriole	336.4	30	7	**YTW32RT33REKHT**	**YTW32RTHT**	21.53	3.25	0.50	L717	**YTW33REHT**	2.50	0.88	0.62	L718	**BYNA32RT15HHT**	L717
Ibis	397.5	26	7	**YTW34RT34REKHT**	**YTW34RTHT**	21.60	3.25	0.50	L719	**YTW34REHT**	2.50	0.88	0.62	L718	**BYNA34RT15HHT**	L719
Flicker	477	24	7	**YTW36RT362REKHT**	**YTW36RTHT**	23.41	3.25	0.50	L720	**YTW362REHT**	2.50	0.88	0.62	L721	**BYNA36RT15HHT**	L720
Hawk	477	26	7	**YTW36RT36REKHT**	**YTW36RTHT**	23.41	3.25	0.50	L720	**YTW36REHT**	2.50	0.88	0.62	L721	**BYNA36RT15HHT**	L720
Parakeet	556.5	24	7	**YTW39RT43REKHT**	**YTW39RTHT**	23.66	3.25	0.50	L722	**YTW43REHT**	2.50	0.88	0.69	L723	**BYNA39RT15HHT**	L722
Dove	556.5	26	7	**YTW39RT43REKHT**	**YTW39RTHT**	23.66	3.25	0.50	L722	**YTW43REHT**	2.50	0.88	0.69	L723	**BYNA39RT15HHT**	L722
Peacock	605	24	7	**YTW43RT43REKHT**	**YTW43RTHT**	24.49	3.25	0.50	L724	**YTW43REHT**	2.50	0.88	0.69	L723	**BYNA43RT15HHT**	L724
Squab	605	26	7	**YTW43RT43REKHT**	**YTW43RTHT**	24.49	3.25	0.50	L724	**YTW43REHT**	2.50	0.88	0.69	L723	**BYNA43RT15HHT**	L724
Rook	636	24	7	**YTW43RT43REKHT**	**YTW43RTHT**	24.49	3.25	0.50	L724	**YTW43REHT**	2.50	0.88	0.69	L723	**BYNA43RT15HHT**	L724
Grosbeak	636	26	7	**YTW43RT43REKHT**	**YTW43RTHT**	24.49	3.25	0.50	L724	**YTW43REHT**	2.50	0.88	0.69	L723	**BYNA43RT15HHT**	L724
Flamingo	666.6	24	7	**YTW43RT43REKHT**	**YTW43RTHT**	24.49	3.25	0.50	L724	**YTW43REHT**	2.50	0.88	0.69	L723	**BYNA43RT15HHT**	L724
Starling	715.5	26	7	**YTW451RT48REKHT**	**YTW451RTHT**	29.41	3.25	0.50	L725	**YTW48REHT**	2.69	1.25	0.75	L726	**BYNA451RT15HHT**	L725
Cuckoo	795	24	7	**YTW451RT45REKHT**	**YTW451RTHT**	29.41	3.25	0.50	L725	**YTW45REHT**	2.69	1.25	0.75	L726	**BYNA451RT15HHT**	L725
Drake	795	26	7	**YTW451RT48REKHT**	**YTW451RTHT**	29.41	3.25	0.50	L725	**YTW48REHT**	2.69	1.25	0.75	L726	**BYNA451RT15HHT**	L725
Tern	795	45	7	**YTW451RT481REKHT**	**YTW451RTHT**	29.41	3.25	0.50	L725	**YTW481REHT**	2.69	1.25	0.75	L726	**BYNA451RT15HHT**	L725
Condor	795	54	7	**YTW451RT45REKHT**	**YTW451RTHT**	29.41	3.25	0.50	L725	**YTW45REHT**	2.69	1.25	0.75	L726	**BYNA451RT15HHT**	L725
Ruddy	900	45	7	**YTW48RT481REKHT**	**YTW48RTHT**	29.50	3.25	0.50	L727	**YTW481REHT**	2.69	1.25	0.75	L726	**BYNA49RT15HHT**	L727
Rail	954	45	7	**YTW48RT481REKHT**	**YTW48RTHT**	29.50	3.25	0.50	L727	**YTW481REHT**	2.69	1.25	0.75	L726	**BYNA49RT15HHT**	L727
Cardinal	954	54	7	**YTW48RT48REKHT**	**YTW48RTHT**	29.50	3.25	0.50	L727	**YTW48REHT**	2.69	1.25	0.75	L726	**BYNA49RT15HHT**	L727
Ortolan	1033.5	45	7	**YTW49RT483REKHT**	**YTW49RTHT**	31.35	3.25	0.50	L727	**YTW483REHT**	2.69	1.25	1.00	L726	**BYNA49RT15HHT**	L727
Curlew	1033.5	54	7	**YTW49RT50REKHT**	**YTW49RTHT**	31.35	3.25	0.50	L727	**YTW50REHT**	2.69	1.25	1.00	L726	**BYNA49RT15HHT**	L727
Bluejay	1113	45	7	**YTW49RT483REKHT**	**YTW49RTHT**	31.35	3.25	0.50	L727	**YTW483REHT**	2.69	1.25	1.00	L726	**BYNA49RT15HHT**	L727
Finch	1113	54	19	**YTW52RT50REKHT**	**YTW52RHT**	35.55	3.25	0.50	L728	**YTW50REHT**	2.69	1.25	1.00	L726	**BYNA52RT15HHT**	L728
Bunting	1192.5	45	7	**YTW52RT521REKHT**	**YTW52RTHT**	35.55	4.00	0.62	L728	**YTW521REHT**	2.69	1.25	1.00	L726	**BYNA52RT15HHT**	L728
Bittern	1272	45	7	**YTW52RT521REKHT**	**YTW52RTHT**	35.55	4.00	0.62	L728	**YTW521REHT**	2.69	1.25	1.00	L726	**BYNA52RT15HHT**	L728
Pheasant	1272	54	19	**YTW52RT56REKHT**	**YTW52RTHT**	35.55	4.00	0.62	L728	**YTW56REHT**	2.69	1.25	1.00	L726	**BYNA52RT15HHT**	L728
Dipper	1351.5	45	7	**YTW52RT521REKHT**	**YTW52RTHT**	35.55	4.00	0.62	L728	**YTW521REHT**	2.69	1.25	1.00	L726	**BYNA52RT15HHT**	L728
Martin	1351.5	54	19	**YTW52RT56REKHT**	**YTW52RTHT**	35.55	4.00	0.62	L728	**YTW56REHT**	2.69	1.25	1.00	L726	**BYNA52RT15HHT**	L728
Nuthatch	1510.5	45	7	**YTW549RT521REKHT**	**YTW549RTHT**	35.55	4.00	0.62	L729	**YTW521REHT**	2.69	1.25	1.00	L726	**BYNA56RT15HHT**	L729
Parrot	1510.5	54	19	**YTW549RT56REKHT**	**YTW549RTHT**	35.55	4.00	0.62	L729	**YTW56REHT**	2.69	1.25	1.00	L726	**BYNA56RT15HHT**	L729
Lapwing	1590	45	7	**YTW549RT549REKHT**	**YTW549RTHT**	35.55	4.00	0.62	L729	**YTW549REHT**	2.69	1.25	1.00	L726	**BYNA56RT15HHT**	L729
Falcon	1590	54	19	**YTW56RT590REKHT**	**YTW56RTHT**	35.99	4.00	0.62	L729	**YTW590REHT**	2.69	1.25	1.00	L726	**BYNA56RT15HHT**	L729
Chukar	1780	84	19	**YTW58RT58REKHT**	**YTW58RTHT**	36.99	4.00	0.62	L735	**YTW58REHT**	2.69	1.25	1.00	L726	**BYNA58RT15HHT**	L735
Bluebird	2156	84	19	**YTW59RT59REKHT**	**YTW59RTHT**	37.34	4.00	0.62	L735	**YTW59REHT**	2.69	1.25	1.00	L726	**BYNA59RT15HHT**	L735
Kiwi	2167	72	7	**YTW59RT591REKHT**	**YTW59RTHT**	37.34	4.00	0.62	L735	**YTW591REHT**	2.69	1.25	1.00	L726	**BYNA59RT15HHT**	L735

Complete Assembly: Includes Aluminum body, Steel eye, 15 degree terminal and aluminum hardware. For stainless steel hardware add SS to end of catalog number for complete assembly (example: YTW32R34REKHTSS) or to terminal (BYNA32R15HTSSHHTSS) if ordered separately.

For assembly without terminal and hardware add NT to end of complete assembly catalog number (example: YTW32R34REKHTNT).
† BYNA terminals must be crimped from cable end moving toward pad end.

* Overlap crimps.
‡ Wide dies may be used on aluminum only (no steel), add suffix "W" to part number (example: L725W).

Blue highlighted items are industry standard and most frequently ordered.

TYPES YTW-RDT-REKHT, YTW-RDTHT, BYNA-RT-HHT EHV

Double Pad, EHV Full Tension Deadend for ACSS Conductor

Full tension compression deadend for 250° C rated ACSS transmission lines at 345 kV and over. Standard 15° NEMA tap pad provides either 0° or 30° tap when BYNA-R15 terminal is used.

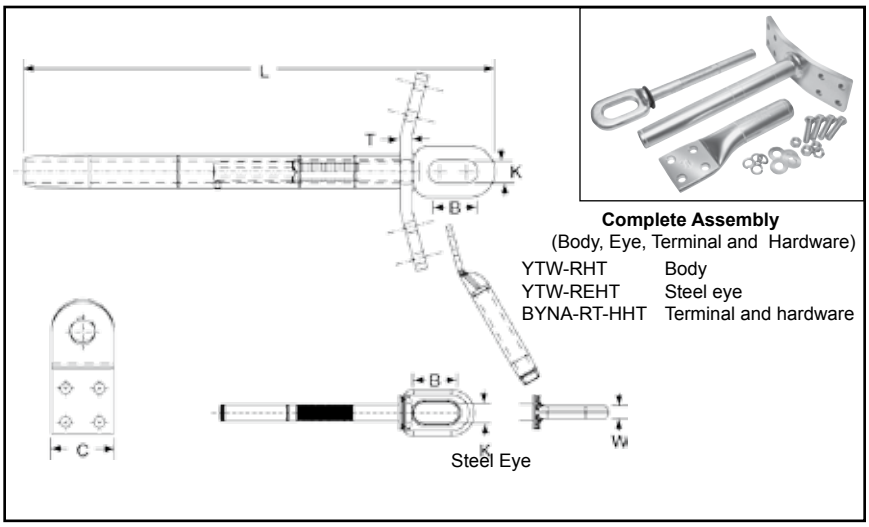

ACSS				Double Pad		Inches			Body Die*‡	Steel Eye	Inches			Eye Die*	Terminal † with Hardware	Term Die*‡
Conductor Name	Size kcmil	Stranding		Complete Assembly	Alum. Body	L	C	T			B	K	W			
		Alum.	Steel													
Linnet	336.4	26	7	**YTW32RDT34REKHT**	**YTW32RDTHT**	21.53	3.25	0.50	L717	**YTW34REHT**	2.50	0.88	0.62	L718	**BYNA32RT15HHT**	L717
Oriole	336.4	30	7	**YTW32RDT33REKHT**	**YTW32RDTHT**	21.53	3.25	0.50	L717	**YTW33REHT**	2.50	0.88	0.62	L718	**BYNA32RT15HHT**	L717
Ibis	397.5	26	7	**YTW34RDT34REKHT**	**YTW34RDTHT**	21.60	3.25	0.50	L719	**YTW34REHT**	2.50	0.88	0.62	L718	**BYNA34RT15HHT**	L719
Flicker	477	24	7	**YTW36RDT362REKHT**	**YTW36RDTHT**	23.41	3.25	0.50	L720	**YTW362REHT**	2.50	0.88	0.62	L721	**BYNA36RT15HHT**	L720
Hawk	477	26	7	**YTW36RDT36REKHT**	**YTW36RDTHT**	23.41	3.25	0.50	L720	**YTW36REHT**	2.50	0.88	0.62	L721	**BYNA36RT15HHT**	L720
Parakeet	556.5	24	7	**YTW39RDT43REKHT**	**YTW39RDTHT**	23.66	3.25	0.50	L722	**YTW43REHT**	2.50	0.88	0.69	L723	**BYNA39RT15HHT**	L722
Dove	556.5	26	7	**YTW39RDT43REKHT**	**YTW39RDTHT**	23.66	3.25	0.50	L722	**YTW43REHT**	2.50	0.88	0.69	L723	**BYNA39RT15HHT**	L722
Peacock	605	24	7	**YTW43RDT43REKHT**	**YTW43RDTHT**	24.49	3.25	0.50	L724	**YTW43REHT**	2.50	0.88	0.69	L723	**BYNA43RT15HHT**	L724
Squab	605	26	7	**YTW43RDT43REKHT**	**YTW43RDTHT**	20.49	3.25	0.50	L724	**YTW43REHT**	2.50	0.88	0.69	L723	**BYNA43RT15HHT**	L724
Rook	636	24	7	**YTW43RDT43REKHT**	**YTW43RDTHT**	24.49	3.25	0.50	L724	**YTW43REHT**	2.50	0.88	0.69	L723	**BYNA43RT15HHT**	L724
Grosbeak	636	26	7	**YTW43RDT43REKHT**	**YTW43RDTHT**	24.49	3.25	0.50	L724	**YTW43REHT**	2.50	0.88	0.69	L723	**BYNA43RT15HHT**	L724
Flamingo	666.6	24	7	**YTW43RDT43REKHT**	**YTW43RDTHT**	24.49	3.25	0.50	L724	**YTW43REHT**	2.50	0.88	0.69	L723	**BYNA43RT15HHT**	L724
Starling	715.5	26	7	**YTW451RDT48REKHT**	**YTW451RDTHT**	29.41	3.25	0.50	L725	**YTW48REHT**	2.69	1.25	0.75	L726	**BYNA451RT15HHT**	L725
Cuckoo	795	24	7	**YTW451RDT45REKHT**	**YTW451RDTHT**	29.41	3.25	0.50	L725	**YTW45REHT**	2.69	1.25	0.75	L726	**BYNA451RT15HHT**	L725
Drake	795	26	7	**YTW451RDT48REKHT**	**YTW451RDTHT**	29.41	3.25	0.50	L725	**YTW48REHT**	2.69	1.25	0.75	L726	**BYNA451RT15HHT**	L725
Tern	795	45	7	**YTW451RDT481REKHT**	**YTW451RDTHT**	29.41	3.25	0.50	L725	**YTW481REHT**	2.69	1.25	0.75	L726	**BYNA451RT15HHT**	L725
Condor	795	54	7	**YTW451RDT45REKHT**	**YTW451RDTHT**	29.41	3.25	0.50	L725	**YTW45REHT**	2.69	1.25	0.75	L726	**BYNA451RT15HHT**	L725
Ruddy	900	45	7	**YTW48RDT481REKHT**	**YTW48RDTHT**	29.50	3.25	0.50	L727	**YTW481REHT**	2.69	1.25	0.75	L726	**BYNA49RT15HHT**	L727
Rail	954	45	7	**YTW48RDT481REKHT**	**YTW48RDTHT**	29.50	3.25	0.50	L727	**YTW481REHT**	2.69	1.25	0.75	L726	**BYNA49RT15HHT**	L727
Cardinal	954	54	7	**YTW48RDT48REKHT**	**YTW48RDTHT**	29.50	3.25	0.50	L727	**YTW48REHT**	2.69	1.25	0.75	L726	**BYNA49RT15HHT**	L727
Ortolan	1033.5	45	7	**YTW49RDT483REKHT**	**YTW49RDTHT**	31.35	3.25	0.50	L727	**YTW483REHT**	2.69	1.25	1.00	L726	**BYNA49RT15HHT**	L727
Curlew	1033.5	54	7	**YTW49RDT50REKHT**	**YTW49RDTHT**	31.35	3.25	0.50	L727	**YTW50REHT**	2.69	1.25	1.00	L726	**BYNA49RT15HHT**	L727
Bluejay	1113	45	7	**YTW49RDT483REKHT**	**YTW49RDTHT**	31.35	3.25	0.50	L727	**YTW483REHT**	2.69	1.25	1.00	L726	**BYNA49RT15HHT**	L727
Finch	1113	54	19	**YTW52RDT50REKHT**	**YTW52RDTHT**	35.55	3.25	0.50	L728	**YTW50REHT**	2.69	1.25	1.00	L726	**BYNA52RT15HHT**	L728
Bunting	1192.5	45	7	**YTW52RDT521REKHT**	**YTW52RDTHT**	35.55	4.00	0.62	L728	**YTW521REHT**	2.69	1.25	1.00	L726	**BYNA52RT15HHT**	L728
Bittern	1272	45	7	**YTW52RDT521REKHT**	**YTW52RDTHT**	35.55	4.00	0.62	L728	**YTW521REHT**	2.69	1.25	1.00	L726	**BYNA52RT15HHT**	L728
Pheasant	1272	54	19	**YTW52RDT56REKHT**	**YTW52RDTHT**	35.55	4.00	0.62	L728	**YTW56REHT**	2.69	1.25	1.00	L726	**BYNA52RT15HHT**	L728
Dipper	1351.5	45	7	**YTW52RDT521REKHT**	**YTW52RDTHT**	35.55	4.00	0.62	L728	**YTW521REHT**	2.69	1.25	1.00	L726	**BYNA52RT15HHT**	L728
Martin	1351.5	54	19	**YTW52RDT56REKHT**	**YTW52RDTHT**	35.55	4.00	0.62	L728	**YTW56REHT**	2.69	1.25	1.00	L726	**BYNA52RT15HHT**	L728
Nuthatch	1510.5	45	7	**YTW549RDT521REKHT**	**YTW549RDTHT**	35.55	4.00	0.62	L729	**YTW521REHT**	2.69	1.25	1.00	L726	**BYNA56RT15HHT**	L729
Parrot	1510.5	54	19	**YTW549RDT56REKHT**	**YTW549RDTHT**	35.55	4.00	0.62	L729	**YTW56REHT**	2.69	1.25	1.00	L726	**BYNA56RT15HHT**	L729
Lapwing	1590	45	7	**YTW549RDT549REKHT**	**YTW549RDTHT**	35.55	4.00	0.62	L729	**YTW549REHT**	2.69	1.25	1.00	L726	**BYNA56RT15HHT**	L729
Falcon	1590	54	19	**YTW56RDT590REKHT**	**YTW56RDTHT**	35.99	4.00	0.62	L729	**YTW590REHT**	2.69	1.25	1.00	L726	**BYNA56RT15HHT**	L729
Chukar	1780	84	19	**YTW58RDT58REKHT**	**YTW58RDTHT**	36.99	4.00	0.62	L735	**YTW58REHT**	2.69	1.25	1.00	L726	**BYNA58RT15HHT**	L735
Bluebird	2156	84	19	**YTW59RDT59REKHT**	**YTW59RDTHT**	37.34	4.00	0.62	L735	**YTW59REHT**	2.69	1.25	1.00	L726	**BYNA59RT15HHT**	L735
Kiwi	2167	72	7	**YTW59RDT591REKHT**	**YTW59RDTHT**	37.34	4.00	0.62	L735	**YTW591REHT**	2.69	1.25	1.00	L726	**BYNA59RT15HHT**	L735

Complete Assembly: Includes Aluminum body, Steel eye, 15 degree terminal and aluminum hardware. For stainless steel hardware add SS to end of catalog number for complete assembly (example: YTW32R34REKHTSS) or to terminal (BYNA32R15HTSSHHTSS) if ordered separately.

For assembly without terminal and hardware add NT to end of complete assembly catalog number (example: YTW32R34REKHTNT).

† BYNA terminals must be crimped from cable end moving toward pad end.

* Overlap crimps.

‡ Wide dies may be used on aluminum only (no steel), add suffix "W" to part number (example: L725W).

Blue highlighted items are industry standard and most frequently ordered.

TYPE YTS-R-RSHT

Full Tension Splice Kit for ACSS Conductor

Full tension, two-piece, compression splice for 250° C ACSS transmission lines up to and including 230 kV. Outer aluminum sleeve has filler hole and plug for PENETROX™ joint compound. Kit includes the outer aluminum and inner steel sleeve.

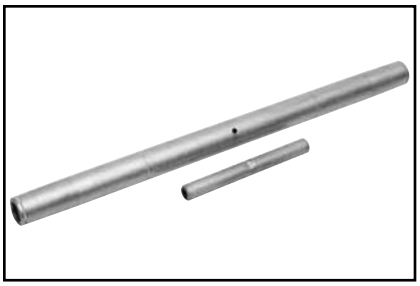

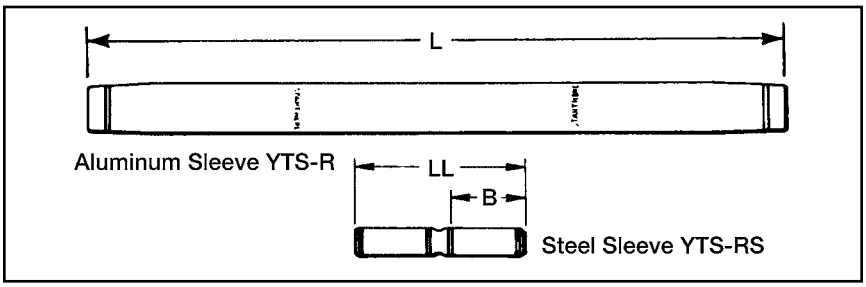

ACSS				Splice Kit	Aluminum Sleeve			Steel Sleeve		
Conductor Name	Size kcmil	Stranding			Inches		Die*‡	Inches		Die*
		Alum.	Steel		L	O.D.		LL	B	
Linnet	336.4	26	7	**YTS32R34RSHT**	25.30	1.19	L717	5-1/4"	2.64	L718
Ibis	397.5	26	7	**YTS34R34RSHT**	25.20	1.28	L719	5-1/4"	2.64	L718
Flicker	477	24	7	**YTS36R362RSHT**	26.16	1.41	L720	5-7/8"	2.66	L721
Hawk	477	26	7	**YTS36R36RSHT**	26.16	1.41	L720	5-7/8"	2.66	L721
Parakeet	556.5	24	7	**YTS39R43RSHT**	27.88	1.50	L720	5-7/8"	2.66	L721
Dove	556.5	26	7	**YTS39R43RSHT**	27.88	1.50	L720	5-7/8"	2.66	L721
Peacock	605	24	7	**YTS43R43RSHT**	29.44	1.61	L724	5-7/8"	2.66	L723
Squab	605	26	7	**YTS43R43RSHT**	29.44	1.61	L724	5-7/8"	2.66	L723
Rook	636	24	7	**YTS43R43RSHT**	29.44	1.61	L724	5-7/8"	2.66	L723
Grosbeak	636	26	7	**YTS43R43RSHT**	29.44	1.61	L724	5-7/8"	2.66	L723
Flamingo	666.6	24	7	**YTS43R43RSHT**	29.44	1.61	L724	5-7/8"	2.66	L723
Starling	715.5	26	7	**YTS451R48RSHT**	36.00	1.80	L725	9"	4.19	L726
Cuckoo	795	24	7	**YTS451R449RSHT**	36.00	1.80	L725	9"	4.19	L726
Drake	795	26	7	**YTS451R48RSHT**	36.00	1.80	L725	9"	4.19	L726
Tern	795	45	7	**YTS451R48RSHT**	36.00	1.80	L725	9-1/8"	4.19	L726
Condor	795	54	7	**YTS451R449RSHT**	36.00	1.80	L725	9"	4.19	L726
Rail	954	45	7	**YTS48R481RSHT**	36.00	1.97	L727	9-1/8"	4.19	L726
Cardinal	954	54	7	**YTS48R48RSHT**	36.00	1.97	L727	9"	4.19	L726
Ortolan	1033.5	45	7	**YTS49R483RSHT**	36.00	1.97	L727	9-1/8"	4.19	L726
Curlew	1033.5	54	7	**YTS49R48RSHT**	36.00	1.97	L727	9"	4.19	L726
Bluejay	1113	45	7	**YTS49R483RSHT**	36.00	1.97	L727	9-1/8"	4.19	L726
Finch	1113	54	19	**YTS52R48RSHT**	49.07	2.25	L728	9"	4.19	L726
Bunting	1192.5	45	7	**YTS52R521RSHT**	49.07	2.25	L728	9"	4.19	L726
Bittern	1272	45	7	**YTS52R521RSHT**	49.07	2.25	L728	9"	4.19	L726
Pheasant	1272	54	19	**YTS52R59RSHT**	49.07	2.25	L728	9-1/8"	4.25	L726
Dipper	1351.5	45	7	**YTS52R521RSHT**	49.07	2.25	L728	9"	4.19	L726
Martin	1351.5	54	19	**YTS52R59RSHT**	49.07	2.25	L728	9-1/8"	4.25	L726
Nuthatch	1510.5	45	7	**YTS549R521RSHT**	39.73	2.50	L729	9"	4.19	L726
Parrot	1510.5	54	19	**YTS54959RSHT**	39.73	2.50	L729	9-1/8"	4.25	L726
Lapwing	1590	45	7	**YTS549R549RSHT**	39.73	2.50	L729	9"	4.19	L726
Falcon	1590	54	19	**YTS56R59RSHT**	39.73	2.50	L729	9-1/8"	4.25	L726
Chukar	1780	84	19	**YTS58R48RSHT**	42.20	2.50	L735	4-1/4"	4.19	L726
Bluebird	2156	84	19	**YTS59R59RSHT**	49.93	2.50	L735	4-1/4"	4.25	L726
Kiwi	2167	72	7	**YTS59R521RSHT**	49.93	2.50	L735	4-1/4"	4.19	L726

Splice Kit: Includes aluminum sleeve and steel sleeve.
* Overlap crimps.
‡ Wide dies may be used on aluminum only (no steel), add suffix "W" to part number (example: L725W).

Blue highlighted items are industry standard and most frequently ordered.

TYPE YTS-RT-RSHT EHV

Full Tension Splice Kit for ACSS Conductor

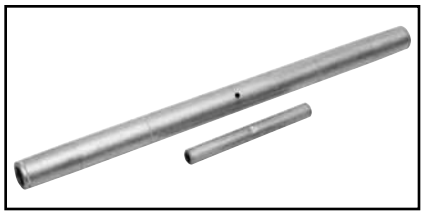

Full tension, two-piece, compression splice for 250°C ACSS transmission lines at 345 kV and over. Outer aluminum sleeve has filler hole and plug for PENETROX™ joint compound. Kit includes the outer aluminum and inner steel sleeve.

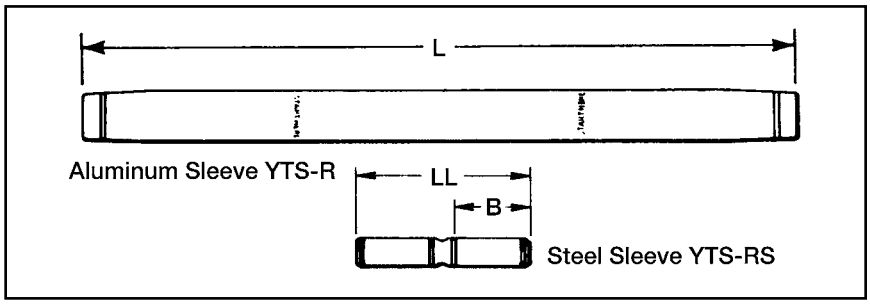

ACSS				Splice Kit	Aluminum Sleeve			Steel Sleeve		
Conductor Name	Size kcmil	Stranding			Inches		Die*‡	Inches		Die*
		Alum.	Steel		L	O.D.		LL	B	
Linnet	336.4	26	7	**YTS32RT34RSHT**	25.92	1.19	L717	5.74	2.45	L718
Oriole	336.4	30	7	**YTS32RT33RSHT**	25.92	1.19	L717	5.74	2.45	L718
Ibis	397.5	26	7	**YTS34RT34RSHT**	25.92	1.28	L719	5.74	2.45	L718
Flicker	477	24	7	**YTS36RT362RSHT**	26.92	1.41	L720	5.88	2.46	L721
Hawk	477	26	7	**YTS36RT36RSHT**	26.92	1.41	L720	5.76	2.46	L721
Parakeet	556.5	24	7	**YTS39RT43RSHT**	28.74	1.50	L722	5.90	2.47	L723
Dove	556.5	26	7	**YTS39RT43RSHT**	28.74	1.50	L722	5.90	2.47	L723
Peacock	605	24	7	**YTS43RT43RSHT**	30.28	1.61	L724	5.90	2.47	L723
Squab	605	26	7	**YTS43RT43RSHT**	30.28	1.61	L724	5.90	2.47	L723
Rook	636	24	7	**YTS43RT43RSHT**	30.28	1.61	L724	5.90	2.47	L723
Grosbeak	636	26	7	**YTS43RT43RSHT**	30.28	1.61	L724	5.90	2.47	L723
Flamingo	666.6	24	7	**YTS43RT43RSHT**	30.28	1.61	L724	5.90	2.47	L723
Starling	715.5	26	7	**YTS451RT48RSHT**	36.96	1.80	L725	9.00	4.00	L726
Cuckoo	795	24	7	**YTS451RT449RSHT**	36.96	1.80	L725	9.00	4.00	L726
Drake	795	26	7	**YTS451RT48RSHT**	36.96	1.80	L725	9.00	4.00	L726
Tern	795	45	7	**YTS451RT48RSHT**	36.96	1.80	L725	9.00	4.00	L726
Condor	795	54	7	**YTS451RT449RSHT**	36.96	1.80	L725	9.00	4.00	L726
Rail	954	45	7	**YTS48RT481RSHT**	37.96	1.97	L727	9.00	4.01	L726
Cardinal	954	54	7	**YTS48RT48RSHT**	37.96	1.97	L727	9.00	4.01	L726
Ortolan	1033.5	45	7	**YTS49RT483RSHT**	37.02	1.97	L727	9.00	4.01	L726
Curlew	1033.5	54	7	**YTS49RT48RSHT**	37.02	1.97	L727	9.00	4.00	L726
Bluejay	1113	45	7	**YTS49RT483RSHT**	37.02	1.97	L727	9.00	4.01	L726
Finch	1113	54	19	**YTS52RT48RSHT**	50.33	2.25	L728	9.00	4.00	L726
Bunting	1192.5	45	7	**YTS52RT521RSHT**	50.33	2.25	L728	9.00	4.00	L726
Bittern	1272	45	7	**YTS52RT521RSHT**	50.33	2.25	L728	9.00	4.00	L726
Pheasant	1272	54	19	**YTS52RT59RSHT**	50.33	2.25	L728	9.10	4.07	L726
Dipper	1351.5	45	7	**YTS52RT521RSHT**	50.33	2.25	L728	9.00	4.00	L726
Martin	1351.5	54	19	**YTS52RT59RSHT**	50.33	2.25	L728	9.10	4.07	L726
Nuthatch	1510.5	45	7	**YTS549RT521RSHT**	42.13	2.50	L729	9.00	4.00	L726
Parrot	1510.5	54	19	**YTS549RT59RSHT**	42.13	2.50	L729	9.10	4.07	L726
Lapwing	1590	45	7	**YTS549RT549RSHT**	42.13	2.50	L729	9.00	4.00	L726
Falcon	1590	54	19	**YTS56RT59RSHT**	42.13	2.50	L729	9.10	4.07	L726
Chukar	1780	84	19	**YTS58RT48RSHT**	43.46	2.50	L735	9.00	4.00	L726
Bluebird	2156	84	19	**YTS59RT59RSHT**	50.91	2.50	L735	9.10	4.07	L726
Kiwi	2167	72	7	**YTS59RT521RSHT**	50.91	2.50	L735	9.00	4.00	L726

Splice Kit: Includes aluminum sleeve and steel sleeve.
* Overlap crimps.
‡ Wide dies may be used on aluminum only (no steel), add suffix "W" to part number (example: L725W).

Blue highlighted items are industry standard and most frequently ordered.

TYPES BYNA-R15HT, BYNA-RHT

Compression Terminal for ACSS Conductor

Compression terminal for ACSS transmission lines up to and including 230 kV.

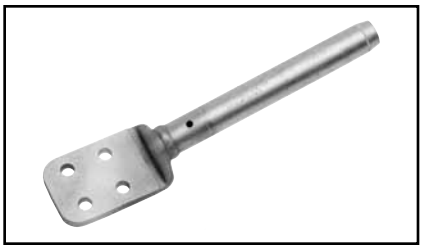

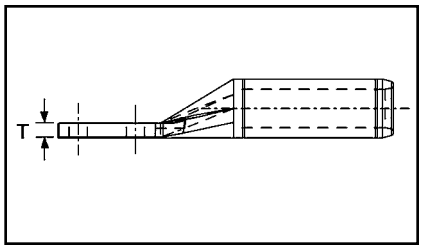

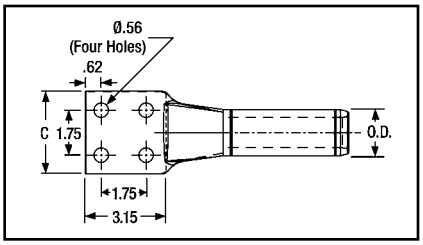

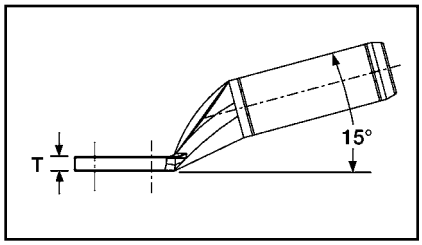

ACSS				15° Terminal		Straight Terminal		Inches			Die*‡
Conductor Name	Size kcmil	Stranding		Catalog Number	Inches L	Catalog Number	Inches L	C	D	T	
		Alum.	Steel								
Linnet	336.4	26	7	**BYNA32R15HT**	16.21	**BYNA32RHT**	16.56	3.25	4.50	0.75	L717
Oriole	336.4	30	7	**BYNA32R15HT**	16.21	**BYNA32RHT**	16.56	3.25	4.50	0.75	L717
Ibis	397.5	26	7	**BYNA34R15HT**	16.24	**BYNA34RHT**	16.60	3.25	4.50	0.75	L719
Flicker	477	24	7	**BYNA36R15HT**	16.51	**BYNA36RHT**	16.92	3.25	4.50	0.75	L720
Hawk	477	26	7	**BYNA36R15HT**	16.51	**BYNA36RHT**	16.92	3.25	4.50	0.75	L720
Parakeet	556.5	24	7	**BYNA39R15HT**	16.89	**BYNA39RHT**	17.30	3.25	4.50	0.75	L722
Dove	556.5	26	7	**BYNA39R15HT**	16.89	**BYNA39RHT**	17.30	3.25	4.50	0.75	L722
Peacock	605	24	7	**BYNA43R15HT**	14.41	**BYNA43RHT**	15.46	3.07	3.95	0.36	L724
Squab	605	26	7	**BYNA43R15HT**	14.41	**BYNA43RHT**	15.46	3.07	3.95	0.36	L724
Rook	636	24	7	**BYNA43R15HT**	14.41	**BYNA43RHT**	15.46	3.07	3.95	0.36	L724
Grosbeak	636	26	7	**BYNA43R15HT**	14.41	**BYNA43RHT**	15.46	3.07	3.95	0.36	L724
Flamingo	666.6	24	7	**BYNA43R15HT**	14.41	**BYNA43RHT**	15.46	3.07	3.95	0.36	L724
Starling	715.5	26	7	**BYNA451R15HT**	15.10	**BYNA451RHT**	15.46	3.22	3.95	0.45	L725
Cuckoo	795	24	7	**BYNA451R15HT**	15.10	**BYNA451RHT**	15.46	3.22	3.95	0.45	L725
Drake	795	26	7	**BYNA451R15HT**	15.10	**BYNA451RHT**	15.46	3.22	3.95	0.45	L725
Tern	795	45	7	**BYNA451R15HT**	15.10	**BYNA451RHT**	15.46	3.22	3.95	0.45	L725
Condor	795	54	7	**BYNA451R15HT**	15.10	**BYNA451RHT**	15.46	3.22	3.95	0.45	L725
Ruddy	900	45	7	**BYNA49R15HT**	15.14	**BYNA49RHT**	15.66	3.22	3.95	0.52	L727
Rail	954	45	7	**BYNA49R15HT**	15.14	**BYNA49RHT**	15.66	3.22	3.95	0.52	L727
Cardinal	954	54	7	**BYNA49R15HT**	15.14	**BYNA49RHT**	15.66	3.22	3.95	0.52	L727
Ortolan	1033.5	45	7	**BYNA49R15HT**	15.14	**BYNA49RHT**	15.66	3.22	3.95	0.52	L727
Curlew	1033.5	54	7	**BYNA49R15HT**	15.14	**BYNA49RHT**	15.66	3.22	3.95	0.52	L727
Bluejay	1113	45	7	**BYNA49R15HT**	15.14	**BYNA49RHT**	15.66	3.22	3.95	0.52	L727
Finch	1113	54	19	**BYNA52R15HT**	16.81	**BYNA52RHT**	18.71	3.22	3.95	0.71	L728
Bunting	1192.5	45	7	**BYNA52R15HT**	16.81	**BYNA52RHT**	18.71	3.22	3.95	0.71	L728
Bittern	1272	45	7	**BYNA52R15HT**	16.81	**BYNA52RHT**	18.71	3.22	3.95	0.71	L728
Pheasant	1272	54	19	**BYNA52R15HT**	16.81	**BYNA52RHT**	18.71	3.22	3.95	0.71	L728
Dipper	1351.5	45	7	**BYNA52R15HT**	16.81	**BYNA52RHT**	18.71	3.22	3.95	0.71	L728
Martin	1351.5	54	19	**BYNA52R15HT**	16.81	**BYNA52RHT**	18.71	3.22	3.95	0.71	L728
Nuthatch	1510.5	45	7	**BYNA56R15HT**	17.56	**BYNA56RHT**	18.65	3.44	3.95	0.86	L729
Parrot	1510.5	54	19	**BYNA56R15HT**	17.56	**BYNA56RHT**	18.65	3.44	3.95	0.86	L729
Lapwing	1590	45	7	**BYNA56R15HT**	17.56	**BYNA56RHT**	18.65	3.44	3.95	0.86	L729
Falcon	1590	54	19	**BYNA56R15HT**	17.56	**BYNA56RHT**	18.65	3.44	3.95	0.86	L729
Chukar	1780	84	19	**BYNA58R15HT**	18.28	**BYNA58RHT**	18.59	3.47	3.95	0.80	L735
Bluebird	2156	84	19	**BYNA59R15HT**	17.95	**BYNA59RHT**	18.43	3.57	3.95	0.64	L735
Kiwi	2167	72	7	**BYNA59R15HT**	17.95	**BYNA59RHT**	18.43	3.57	3.95	0.64	L735

To specify hardware for bolting to corresponding dead-ends add the suffix "H" to the catalog number (example: BYNA52RHHT).

* Overlap crimps.
‡ Wide dies may be used on aluminum only (no steel), add suffix "W" to part number (example: L725W).

Blue highlighted items are industry standard and most frequently ordered.

TYPES BYNA-RT15HT, BYNA-RTHT EHV

Compression Terminal for ACSS Conductor

Compression terminal for 250°C ACSS transmission lines at 345 kV and over.

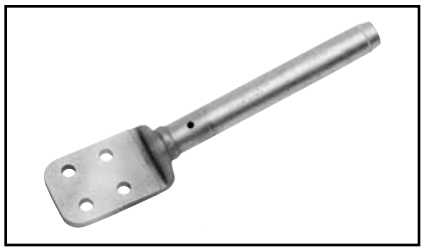

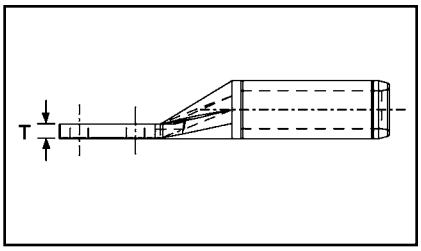

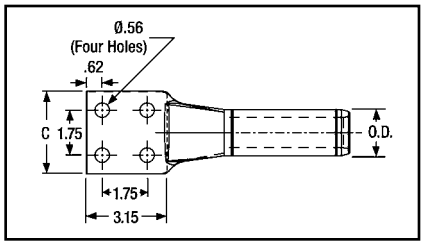

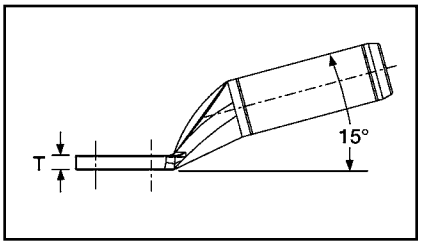

ACSS				15° Terminal		Straight Terminal		Inches			Die*‡
Conductor Name	Size kcmil	Stranding		Catalog Number	Inches L	Catalog Number	Inches L				
		Alum.	Steel					C	D	T	
Linnet	336.4	26	7	**BYNA32RT15HT**	16.41	**BYNA32RTHT**	16.56	3.25	4.50	0.75	L717
Oriole	336.4	30	7	**BYNA32RT15HT**	16.41	**BYNA32RTHT**	16.56	3.25	4.50	0.75	L717
Ibis	397.5	26	7	**BYNA34RT15HT**	16.45	**BYNA34RTHT**	16.60	3.25	4.50	0.75	L719
Flicker	477	24	7	**BYNA36RT15HT**	16.76	**BYNA36RTHT**	16.92	3.25	4.50	0.75	L720
Hawk	477	26	7	**BYNA36RT15HT**	16.76	**BYNA36RTHT**	16.92	3.25	4.50	0.75	L720
Parakeet	556.5	24	7	**BYNA39RT15HT**	17.12	**BYNA39RTHT**	17.30	3.25	4.50	0.75	L722
Dove	556.5	26	7	**BYNA39RT15HT**	17.12	**BYNA39RTHT**	17.30	3.25	4.50	0.75	L722
Peacock	605	24	7	**BYNA43RT15HT**	14.41	**BYNA43RTHT**	15.46	3.07	3.95	0.36	L724
Squab	605	26	7	**BYNA43RT15HT**	14.41	**BYNA43RTHT**	15.46	3.07	3.95	0.36	L724
Rook	636	24	7	**BYNA43RT15HT**	14.41	**BYNA43RTHT**	15.46	3.07	3.95	0.36	L724
Grosbeak	636	26	7	**BYNA43RT15HT**	14.41	**BYNA43RTHT**	15.46	3.07	3.95	0.36	L724
Flamingo	666.6	24	7	**BYNA43RT15HT**	14.41	**BYNA43RTHT**	15.46	3.07	3.95	0.36	L724
Starling	715.5	26	7	**BYNA451RT15HT**	15.10	**BYNA451RTHT**	15.46	3.22	3.95	0.45	L725
Cuckoo	795	24	7	**BYNA451RT15HT**	15.10	**BYNA451RTHT**	15.46	3.22	3.95	0.45	L725
Drake	795	26	7	**BYNA451RT15HT**	15.10	**BYNA451RTHT**	15.46	3.22	3.95	0.45	L725
Tern	795	45	7	**BYNA451RT15HT**	15.10	**BYNA451RTHT**	15.46	3.22	3.95	0.45	L725
Condor	795	54	7	**BYNA451RT15HT**	15.10	**BYNA451RTHT**	15.46	3.22	3.95	0.45	L725
Ruddy	900	45	7	**BYNA49RT15HT**	15.14	**BYNA49RTHT**	15.66	3.22	3.95	0.52	L727
Rail	954	45	7	**BYNA49RT15HT**	15.14	**BYNA49RTHT**	15.66	3.22	3.95	0.52	L727
Cardinal	954	54	7	**BYNA49RT15HT**	15.14	**BYNA49RTHT**	15.66	3.22	3.95	0.52	L727
Ortolan	1033.5	45	7	**BYNA49RT15HT**	15.14	**BYNA49RTHT**	15.66	3.22	3.95	0.52	L727
Curlew	1033.5	54	7	**BYNA49RT15HT**	15.14	**BYNA49RTHT**	15.66	3.22	3.95	0.52	L727
Bluejay	1113	45	7	**BYNA49RT15HT**	15.14	**BYNA49RTHT**	15.66	3.22	3.95	0.52	L727
Finch	1113	54	19	**BYNA52RT15HT**	16.81	**BYNA52RTHT**	18.71	3.22	3.95	0.71	L728
Bunting	1192.5	45	7	**BYNA52RT15HT**	16.81	**BYNA52RTHT**	18.71	3.22	3.95	0.71	L728
Bittern	1272	45	7	**BYNA52RT15HT**	16.81	**BYNA52RTHT**	18.71	3.22	3.95	0.71	L728
Pheasant	1272	54	19	**BYNA52RT15HT**	16.81	**BYNA52RTHT**	18.71	3.22	3.95	0.71	L728
Dipper	1351.5	45	7	**BYNA52RT15HT**	16.81	**BYNA52RTHT**	18.71	3.22	3.95	0.71	L728
Martin	1351.5	54	19	**BYNA52RT15HT**	16.81	**BYNA52RTHT**	18.71	3.22	3.95	0.71	L728
Nuthatch	1510.5	45	7	**BYNA56RT15HT**	17.56	**BYNA56RTHT**	18.65	3.44	3.95	0.86	L729
Parrot	1510.5	54	19	**BYNA56RT15HT**	17.56	**BYNA56RTHT**	18.65	3.44	3.95	0.86	L729
Lapwing	1590	45	7	**BYNA56RT15HT**	17.56	**BYNA56RTHT**	18.65	3.44	3.95	0.86	L729
Falcon	1590	54	19	**BYNA56RT15HT**	17.56	**BYNA56RTHT**	18.65	3.44	3.95	0.86	L729
Chukar	1780	84	19	**BYNA58RT15HT**	18.28	**BYNA58RTHT**	18.59	3.47	3.95	0.80	L735
Bluebird	2156	84	19	**BYNA59RT15HT**	17.95	**BYNA59RTHT**	18.43	3.57	3.95	0.64	L735
Kiwi	2167	72	7	**BYNA59RT15HT**	17.95	**BYNA59RTHT**	18.43	3.57	3.95	0.64	L735

To specify hardware for bolting to corresponding dead-ends add the suffix "H" to the catalog number (example: BYNA52RHHT).

* Overlap crimps.
‡ Wide dies may be used on aluminum only (no steel), add suffix "W" to part number (example: L725W).

Blue highlighted items are industry standard and most frequently ordered.

TYPE BYNS-RHT

Jumper Loop Sleeve for ACSS Conductor

Jumper sleeve for 250°C ACSS transmission lines up to and including 230 kV. Sleeve is pre-filled with PENETROX™ joint compound and capped.

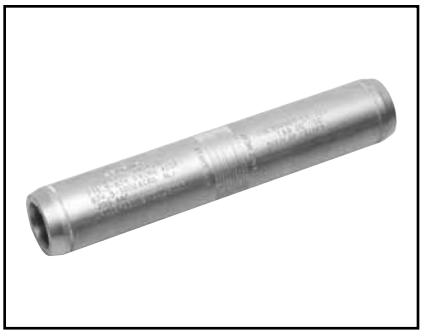

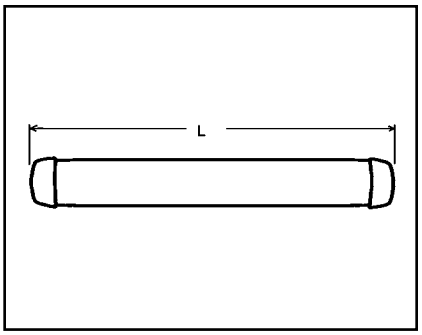

ACSS				Jumper Sleeve	Inches L	Die*‡
Conductor Name	Size kcmil	Stranding				
		Alum.	Steel			
Linnet	336.4	26	7	**BYNS32RHT**	16.90	L717
Oriole	336.4	30	7	**BYNS32RHT**	16.90	L717
Ibis	397.5	26	7	**BYNS34RHT**	17.10	L719
Flicker	477	24	7	**BYNS36RHT**	17.60	L720
Hawk	477	26	7	**BYNS36RHT**	17.60	L720
Parakeet	556.5	24	7	**BYNS39RHT**	18.20	L722
Dove	556.5	26	7	**BYNS39RHT**	18.20	L722
Peacock	605	24	7	**BYNS43RHT**	18.50	L724
Squab	605	26	7	**BYNS43RHT**	18.50	L724
Rook	636	24	7	**BYNS43RHT**	18.50	L724
Grosbeak	636	26	7	**BYNS43RHT**	18.50	L724
Flamingo	666.6	24	7	**BYNS43RHT**	18.50	L724
Starling	715.5	26	7	**BYNS451RHT**	18.60	L725
Cuckoo	795	24	7	**BYNS451RHT**	18.60	L725
Drake	795	26	7	**BYNS451RHT**	18.60	L725
Tern	795	45	7	**BYNS451RHT**	18.60	L725
Condor	795	54	7	**BYNS451RHT**	18.60	L725
Ruddy	900	45	7	**BYNS49RHT**	18.70	L727
Rail	954	45	7	**BYNS49RHT**	18.70	L727
Cardinal	954	54	7	**BYNS49RHT**	18.70	L727
Ortolan	1033.5	45	7	**BYNS49RHT**	18.70	L727
Curlew	1033.5	54	7	**BYNS49RHT**	18.70	L727
Bluejay	1113	45	7	**BYNS49RHT**	18.70	L727
Finch	1113	54	19	**BYNS52RHT**	24.20	L728
Bunting	1192.5	45	7	**BYNS52RHT**	24.20	L728
Bittern	1272	45	7	**BYNS52RHT**	24.20	L728
Pheasant	1272	54	19	**BYNS52RHT**	24.20	L728
Dipper	1351.5	45	7	**BYNS52RHT**	24.20	L728
Martin	1351.5	54	19	**BYNS52RHT**	24.20	L728
Nuthatch	1510.5	45	7	**BYNS56RHT**	23.60	L729
Parrot	1510.5	54	19	**BYNS56RHT**	23.60	L729
Lapwing	1590	45	7	**BYNS56RHT**	23.60	L729
Falcon	1590	54	19	**BYNS56RHT**	23.60	L729
Chukar	1780	84	19	**BYNS58RHT**	23.40	L735
Bluebird	2156	84	19	**BYNS59RHT**	23.40	L735
Kiwi	2167	72	7	**BYNS59RHT**	23.20	L735

* Overlap crimps.
‡ Wide dies may be used on aluminum only (no steel), add suffix "W" to part number (example: L725W).

Blue highlighted items are industry standard and most frequently ordered.

TYPE BYNS-RTHT EHV

Jumper Loop Sleeve for ACSS Conductor

Jumper sleeve for 250°C ACSS transmission lines at 345 kV and over. Sleeve is pre-filled with PENETROX™ joint compound and capped.

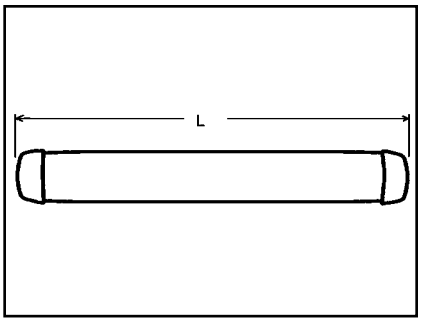

ACSS				Jumper Sleeve	Inches L	Die*‡
Conductor Name	Size kcmil	Stranding				
		Alum.	Steel			
Linnet	336.4	26	7	**BYNS32RTHT**	18.84	L717
Oriole	336.4	30	7	**BYNS32RTHT**	18.84	L717
Ibis	397.5	26	7	**BYNS34RTHT**	18.98	L719
Flicker	477	24	7	**BYNS36RTHT**	19.52	L720
Hawk	477	26	7	**BYNS36RTHT**	19.52	L720
Parakeet	556.5	24	7	**BYNS39RTHT**	20.12	L722
Dove	556.5	26	7	**BYNS39RTHT**	20.12	L722
Peacock	605	24	7	**BYNS43RTHT**	20.24	L724
Squab	605	26	7	**BYNS43RTHT**	20.24	L724
Rook	636	24	7	**BYNS43RTHT**	20.24	L724
Grosbeak	636	26	7	**BYNS43RTHT**	20.24	L724
Flamingo	666.6	24	7	**BYNS43RTHT**	20.24	L724
Starling	715.5	26	7	**BYNS451RTHT**	20.36	L725
Cuckoo	795	24	7	**BYNS451RTHT**	20.36	L725
Drake	795	26	7	**BYNS451RTHT**	20.36	L725
Tern	795	45	7	**BYNS451RTHT**	20.36	L725
Condor	795	54	7	**BYNS451RTHT**	20.36	L725
Ruddy	900	45	7	**BYNS49RTHT**	20.42	L727
Rail	954	45	7	**BYNS49RTHT**	20.42	L727
Cardinal	954	54	7	**BYNS49RTHT**	20.42	L727
Ortolan	1033.5	45	7	**BYNS49RTHT**	20.42	L727
Curlew	1033.5	54	7	**BYNS49RTHT**	20.42	L727
Bluejay	1113	45	7	**BYNS49RTHT**	20.42	L727
Finch	1113	54	19	**BYNS52RTHT**	25.96	L728
Bunting	1192.5	45	7	**BYNS52RTHT**	25.96	L728
Bittern	1272	45	7	**BYNS52RTHT**	25.96	L728
Pheasant	1272	54	19	**BYNS52RTHT**	25.96	L728
Dipper	1351.5	45	7	**BYNS52RTHT**	25.96	L728
Martin	1351.5	54	19	**BYNS52RTHT**	25.96	L728
Nuthatch	1510.5	45	7	**BYNS56RTHT**	25.34	L729
Parrot	1510.5	54	19	**BYNS56RTHT**	25.34	L729
Lapwing	1590	45	7	**BYNS56RTHT**	25.34	L729
Falcon	1590	54	19	**BYNS56RTHT**	25.34	L729
Chukar	1780	84	19	**BYNS58RTHT**	25.22	L735
Bluebird	2156	84	19	**BYNS59RTHT**	24.9	L735
Kiwi	2167	72	7	**BYNS59RTHT**	24.9	L735

* Overlap crimps.
‡ Wide dies may be used on aluminum only (no steel), add suffix "W" to part number (example: L725W).

Blue highlighted items are industry standard and most frequently ordered.

TYPE YNT-R-RHT

Compression T-Tap for ACSS Conductor

Two piece compression T-Tap for ACSS transmission lines that include up to 230 kV. Tap element is pre-filled with PENETROX™ joint compound and sealed.

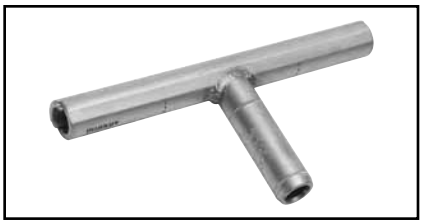

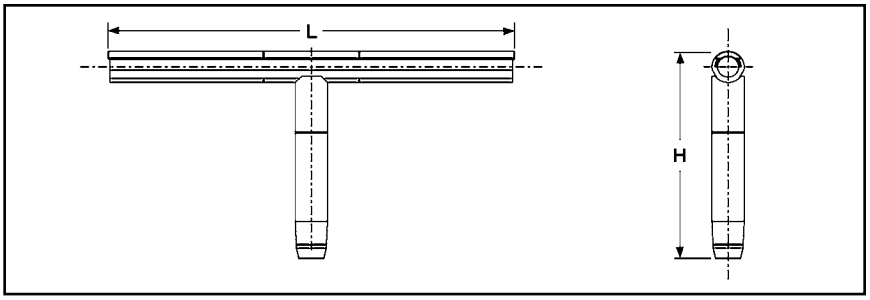

ACSS				T-Tap*	Inches		Die*‡
Conductor Name	Size kcmil	Stranding			L	H	
		Alum.	Steel				
Linnet	336.4	26	7	**YNT32R32RHT**	23.46	10.39	L717
Oriole	336.4	30	7	**YNT32R32RHT**	23.46	10.39	L717
Ibis	397.5	26	7	**YNT34R34RHT**	23.60	10.53	L719
Flicker	477	24	7	**YNT36R36RHT**	24.29	10.85	L720
Hawk	477	26	7	**YNT36R36RHT**	24.29	10.85	L720
Parakeet	556.5	24	7	**YNT39R39RHT**	24.69	11.13	L722
Dove	556.5	26	7	**YNT39R39RHT**	24.69	11.13	L722
Peacock	605	24	7	**YNT43R43RHT**	25.48	11.20	L724
Squab	605	26	7	**YNT43R43RHT**	25.48	11.20	L724
Rook	636	24	7	**YNT43R43RHT**	25.48	11.20	L724
Grosbeak	636	26	7	**YNT43R43RHT**	25.48	11.20	L724
Flamingo	666.6	24	7	**YNT43R43RHT**	25.48	11.20	L724
Starling	715.5	26	7	**YNT451R451RHT**	25.60	11.70	L725
Cuckoo	795	24	7	**YNT451R451RHT**	25.60	11.70	L725
Drake	795	26	7	**YNT451R451RHT**	25.60	11.70	L725
Tern	795	45	7	**YNT451R451RHT**	25.60	11.70	L725
Condor	795	54	7	**YNT451R451RHT**	25.60	11.70	L725
Ruddy	900	45	7	**YNT49R49RHT**	25.66	11.90	L727
Rail	954	45	7	**YNT49R49RHT**	25.66	11.90	L727
Cardinal	954	54	7	**YNT49R49RHT**	25.66	11.90	L727
Ortolan	1033.5	45	7	**YNT49R49RHT**	25.66	11.90	L727
Curlew	1033.5	54	7	**YNT49R49RHT**	25.66	11.90	L727
Bluejay	1113	45	7	**YNT49R49RHT**	25.66	11.90	L727
Finch	1113	54	19	**YNT52R52RHT**	29.61	15.10	L728
Bunting	1192.5	45	7	**YNT52R52RHT**	29.61	15.10	L728
Bittern	1272	45	7	**YNT52R52RHT**	29.61	15.10	L728
Pheasant	1272	54	19	**YNT52R52RHT**	29.61	15.10	L728
Dipper	1351.5	45	7	**YNT52R52RHT**	29.61	15.10	L728
Martin	1351.5	54	19	**YNT52R52RHT**	29.61	15.10	L728
Nuthatch	1510.5	45	7	**YNT56R56RHT**	31.65	15.08	L729
Parrot	1510.5	54	19	**YNT56R56RHT**	31.65	15.08	L729
Lapwing	1590	45	7	**YNT56R56RHT**	31.65	15.08	L729
Falcon	1590	54	19	**YNT56R56RHT**	31.65	15.08	L729
Chukar	1780	84	19	**YNT58R58RHT**	31.53	15.02	L735
Bluebird	2156	84	19	**YNT59R59RHT**	31.21	14.86	L735
Kiwi	2167	72	7	**YNT59R59RHT**	31.21	14.86	L735

* Overlap crimps.
‡ Wide dies may be used on aluminum only (no steel), add suffix "W" to part number (example: L725W).

For EHV applications add "T" to the catalog number (example: YNT49R49RTHT).

Blue highlighted items are industry standard and most frequently ordered.

TYPE YNTA-RHT

T-Tap with Pad for ACSS Conductor

Two piece compression T-Tap to a NEMA pad for ACSS transmission lines. Up to and including 230 kV.

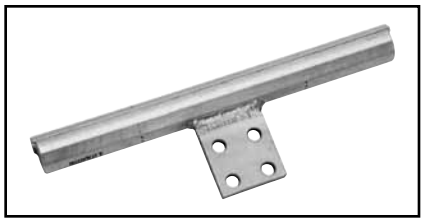

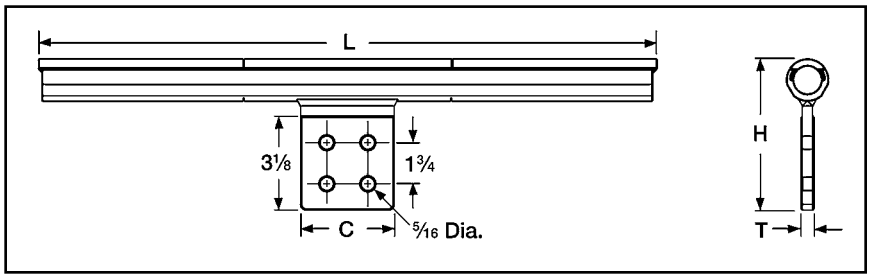

ACSS				T-Tap with Pad	Inches				Die*‡
Conductor Name	Size kcmil	Stranding			L	C	H	T	
		Alum.	Steel						
Linnet	336.4	26	7	**YNTA32RHT**	23.46	3.25	4.94	0.50	L717
Oriole	336.4	30	7	**YNTA32RHT**	23.46	3.25	4.94	0.50	L717
Ibis	397.5	26	7	**YNTA34RHT**	23.60	3.25	5.05	0.50	L719
Flicker	477	24	7	**YNTA36RHT**	24.29	3.25	5.16	0.56	L720
Hawk	477	26	7	**YNTA36RHT**	24.29	3.25	5.16	0.56	L720
Parakeet	556.5	24	7	**YNTA39RHT**	24.69	3.25	5.25	0.56	L722
Dove	556.5	26	7	**YNTA39RHT**	24.69	3.25	5.25	0.56	L722
Peacock	605	24	7	**YNTA43RHT**	25.48	3.25	5.36	0.56	L724
Squab	605	26	7	**YNTA43RHT**	25.48	3.25	5.36	0.56	L724
Rook	636	24	7	**YNTA43RHT**	25.48	3.25	5.36	0.56	L724
Grosbeak	636	26	7	**YNTA43RHT**	25.48	3.25	5.36	0.56	L724
Flamingo	666.6	24	7	**YNTA43RHT**	25.48	3.25	5.36	0.56	L724
Starling	715.5	26	7	**YNTA451RHT**	25.60	3.25	5.55	0.56	L725
Cuckoo	795	24	7	**YNTA451RHT**	25.60	3.25	5.55	0.56	L725
Drake	795	26	7	**YNTA451RHT**	25.60	3.25	5.55	0.56	L725
Tern	795	45	7	**YNTA451RHT**	25.60	3.25	5.55	0.56	L725
Condor	795	54	7	**YNTA451RHT**	25.60	3.25	5.55	0.56	L725
Ruddy	900	45	7	**YNTA49RHT**	25.66	3.25	5.72	0.56	L727
Rail	954	45	7	**YNTA49RHT**	25.66	3.25	5.72	0.56	L727
Cardinal	954	54	7	**YNTA49RHT**	25.66	3.25	5.72	0.56	L727
Ortolan	1033.5	45	7	**YNTA49RHT**	25.66	3.25	5.72	0.56	L727
Curlew	1033.5	54	7	**YNTA49RHT**	25.66	3.25	5.72	0.56	L727
Bluejay	1113	45	7	**YNTA49RHT**	25.66	3.25	5.72	0.56	L727
Finch	1113	54	19	**YNTA54RHT**	29.61	3.25	6.00	0.69	L728
Bunting	1192.5	45	7	**YNTA54RHT**	29.61	3.25	6.00	0.69	L728
Bittern	1272	45	7	**YNTA54RHT**	29.61	3.25	6.00	0.69	L728
Pheasant	1272	54	19	**YNTA54RHT**	29.61	3.25	6.00	0.69	L728
Dipper	1351.5	45	7	**YNTA54RHT**	29.61	3.25	6.00	0.69	L728
Martin	1351.5	54	19	**YNTA54RHT**	29.61	3.25	6.00	0.69	L728
Nuthatch	1510.5	45	7	**YNTA56RHT**	31.65	3.59	6.25	0.69	L729
Parrot	1510.5	54	19	**YNTA56RHT**	31.65	3.59	6.25	0.69	L729
Lapwing	1590	45	7	**YNTA56RHT**	31.65	3.59	6.25	0.69	L729
Falcon	1590	54	19	**YNTA56RHT**	31.65	3.59	6.25	0.69	L729
Chukar	1780	84	19	**YNTA58RHT**	31.53	3.59	6.25	0.69	L735
Bluebird	2156	84	19	**YNTA59RHT**	31.21	3.59	6.25	0.69	L735
Kiwi	2167	72	7	**YNTA59RHT**	31.21	3.59	6.25	0.69	L735

For EVH applications, add suffix "T" to catalog number (example: YNTA49RTHT).

For EHV applications (2) two tap pad shielding caps (catalog number STS-A-NCG) should be ordered.

* Overlap crimps.
‡ Wide dies may be used on aluminum only, add suffix "W" to part number (example: L725W).

Blue highlighted items are industry standard and most frequently ordered.

TYPE YNU-RHT

Repair Sleeve for ACSS Conductor

For HV and EHV applications. Two-piece repair sleeve for temporary restoration of conductivity to damaged ACSS transmission lines. Use of PENETROX™ joint compound required.

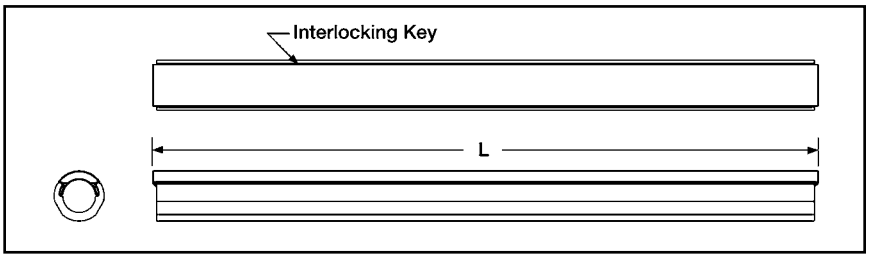

ACSS				Repair Sleeve	Inches	Die*‡
Conductor Name	Size kcmil	Stranding			L	
		Alum.	Steel			
Linnet	336.4	26	7	**YNU32RHT**	22.00	L717
Oriole	336.4	30	7	**YNU32RHT**	22.00	L717
Ibis	397.5	26	7	**YNU34RHT**	22.00	L719
Flicker	477	24	7	**YNU36RHT**	22.00	L720
Hawk	477	26	7	**YNU36RHT**	22.00	L720
Parakeet	556.5	24	7	**YNU39RHT**	24.00	L722
Dove	556.5	26	7	**YNU39RHT**	24.00	L722
Peacock	605	24	7	**YNU43RHT**	24.00	L724
Squab	605	26	7	**YNU43RHT**	24.00	L724
Rook	636	24	7	**YNU43RHT**	24.00	L724
Grosbeak	636	26	7	**YNU43RHT**	24.00	L724
Flamingo	666.6	24	7	**YNU43RHT**	24.00	L724
Starling	715.5	26	7	**YNU451RHT**	24.00	L725
Cuckoo	795	24	7	**YNU451RHT**	24.00	L725
Drake	795	26	7	**YNU451RHT**	24.00	L725
Tern	795	45	7	**YNU451RHT**	24.00	L725
Condor	795	54	7	**YNU451RHT**	24.00	L725
Ruddy	900	45	7	**YNU49RHT**	24.00	L727
Rail	954	45	7	**YNU49RHT**	24.00	L727
Cardinal	954	54	7	**YNU49RHT**	24.00	L727
Ortolan	1033.5	45	7	**YNU49RHT**	24.00	L727
Curlew	1033.5	54	7	**YNU49RHT**	24.00	L727
Bluejay	1113	45	7	**YNU49RHT**	24.00	L727
Finch	1113	54	19	**YNU54RHT**	24.00	L728
Bunting	1192.5	45	7	**YNU54RHT**	24.00	L728
Bittern	1272	45	7	**YNU54RHT**	24.00	L728
Pheasant	1272	54	19	**YNU54RHT**	24.00	L728
Dipper	1351.5	45	7	**YNU54RHT**	24.00	L728
Martin	1351.5	54	19	**YNU54RHT**	24.00	L728
Nuthatch	1510.5	45	7	**YNU56RHT**	27.00	L729
Parrot	1510.5	54	19	**YNU56RHT**	27.00	L729
Lapwing	1590	45	7	**YNU56RHT**	27.00	L729
Falcon	1590	54	19	**YNU56RHT**	27.00	L729
Chukar	1780	84	19	**YNU58RHT**	27.00	L735
Bluebird	2156	84	19	**YNU59RHT**	27.00	L735
Kiwi	2167	72	7	**YNU59RHT**	27.00	L735

* Overlap crimps.
‡ Wide dies may be used on aluminum only (no steel), add suffix "W" to part number (example: L725W).

Blue highlighted items are industry standard and most frequently ordered.

TYPES YTW-A-AEK, YTW-A, YTW-AE, YNA-RH

Single Pad Full Tension Deadend for Stranded Aluminum Cable

Full tension compression deadend for SAC transmission lines. One design for applications up to and including 230 kV. Two hole NEMA tap pad supplied through 636 kcmil. Larger sizes have 4 hole NEMA pad. Standard 15° tap pad when used with YNA-R15H terminal provides either 0° or 30° tap. Aluminum body is pre-filled with PENETROX™ joint compound and capped.

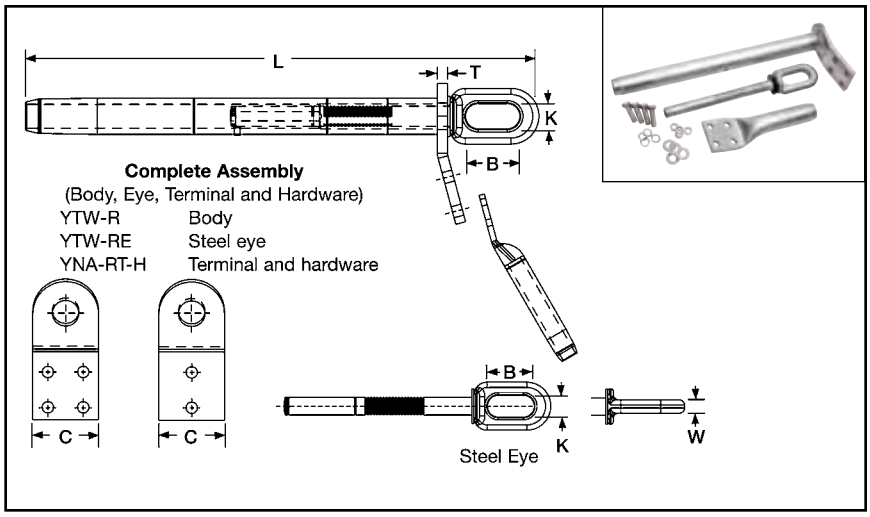

Aluminum			Single Pad		Inches			Steel Eye	Inches			Tools		Terminal with Hardware	Terminal Die*‡
Conductor Name	kcmil	Str.	Complete Assembly	Aluminum Body	C	L	T		B	K	W	Die Index	Y60BHU*‡		
Tulip	336.4	19	YTW301A331AEK	YTW301A	2.25	9.62	0.50	YTW331AE	2.50	0.88	0.62	717	L717	YNA32R15H	L717
	350	37													
Canna	397.5	19	YTW311A331AEK	YTW311A								719	L719	YNA34R15H	L719
	400	37													
Cosmos	450	37	YTW331A331AEK	YTW331A		9.75									
	477	19													
Syringa	477	37													
Hyacinth	500	37	YTW351A351AEK	YTW351A		11.62		YTW351AE				720	L720	YNA36R15H	L720
Dahlia	556.5	19													
Mistletoe	556.5	37													
Orchid	600	61	YTW361A39AEK	YTW361A		12.25		YTW39AE			0.69	722	L722	YNA39R15H	L722
	636	37													
Violet	715.5	37	YTW39A39AEK	YTW39A	3.25	12.75						724	724	YNA43R15H	724
Nasturtium	715.5	61													
Cattail	750	61													
Arbutus	795	37	YTW391A431AEK	YTW391A		14.38		YTW431AE	2.69		0.75				
Lilac	795	61													
	800	61													
Anemone	874.5	37	YTW431A431AEK	YTW431A		14.75				1.25		725	L725	YNA451R15H	L725
Crocus	874.5	61													
Magnolia	954	37													
Goldenrod	954	61													
Bluebell	1033.5	37	YTW445A463AEK	YTW445A		15.62		YTW463AE			1.00	727	L727	YNA49R15H	L727
Larkspur	1033.5	61													
Marigold	1113	37													
	1113	61													
Hawthorn	1192.6	61	YTW451A463AEK	YTW451A											
Nacrcissus	1272	61													
Columbine	1351.5	61	YTW457A463AEK	YTW457A	4.00	16.50	0.62					728	L728	YNA52R15H	L728
Carnation	1431	61													
Coreopsis	1590	61	YTW463A463AEK	YTW463A		17.13								YNA54R15H	
Jessamine	1750	61	YTW47A47AEK	YTW47A		16.38		YTW47AE						YNA56R15H	L729
Cowslip	2000	91	YTW48A484AEK	YTW48A				YTW484AE				735	L735	YNA58R15H	L735
Sagebrush	2250	91	YTW484A484AEK	YTW484A										YNA59R15H	
Lupine	2300	61	YTW486A486AEK	YTW486A		18.50									
	2500	91						YTW486AE	4.00	3.12	1.25	740	L740	YNA594R15H	L740

* Overlap Crimp.
‡ Wide dies may be used on aluminum only, add suffix "W" to part number (example: L725W).

Complete Assembly: Includes Aluminum Body, Steel eye, 15 degree terminal and aluminum hardware. For stainless steel hardware add SS to the end of the catalog number. For complete assembly (example: YTW391A431AEKSS) or to terminal (YNA43R15HSS) if ordered separately. For assembly without terminal and hardware add NT to the end of the complete catalog number (example: YTW391A431AEKNT).

Blue highlighted items are industry standard and most frequently ordered.

TYPES YTW-AT-AEK, YTW-AT, YTW-AE, YNA-RTH EHV

Single Pad, EHV Full Tension Deadend for Stranded Aluminum Cable

Full tension compression deadend for SAC transmission lines at 345 kV and over. Two hole NEMA tap pad supplied through 636 kcmil. Larger sizes have 4 hole NEMA pad. Standard 15° tap pad when used with YNAR15H terminal provides either 0° or 30° tap. Aluminum body is pre-filled with PENETROX™ joint compound and capped.

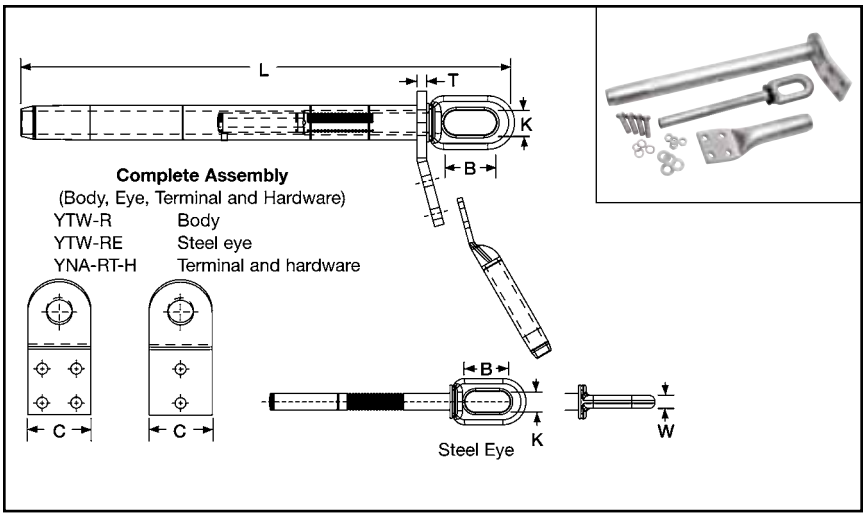

Aluminum			Single Pad		Inches			Steel Eye	Inches			Tools		Terminal with Hardware	Terminal Die*‡
Conductor Name	kcmil	Str.	Complete Assembly	Aluminum Body	C	L	T		B	K	W	Die Index	Y60BHU*‡		
Tulip	336.4	19	YTW301AT331AEK	YTW301AT	2.25	9.62	0.50	YTW331AE	2.50	0.88	0.62	717	L717	YNA32RT15H	L717
	350	37													
Canna	397.5	19	YTW311AT331AEK	YTW311AT								719	L719	YNA34RT15H	L719
	400	37													
Cosmos	450	37	YTW331AT331AEK	YTW331AT		9.75									
	477	19													
Syringa	477	37													
Hyacinth	500	37	YTW351T351AEK	YTW351AT		11.62		YTW351AE				720	L720	YNA36RT15H	L720
Dahlia	556.5	19													
Mistletoe	556.5	37													
Orchid	600	61	YTW361AT39AEK	YTW361AT		12.25		YTW39AE			0.69	722	L722	YNA39RT15H	L722
	636	37													
Violet	715.5	37	YTW39AT39AEK	YTW39AT	3.25	12.75						724	L724	YNA43RT15H	L724
Nasturtium	715.5	61													
Cattail	750	61													
Arbutus	795	37	YTW391AT431AEK	YTW391AT		14.38		YTW431AE			0.75				
Lilac	795	61													
	800	61													
Anemone	874.5	37	YTW431AT431AEK	YTW431AT		14.75						725	L725	YNA451RT15H	L725
Crocus	874.5	61													
Magnolia	954	37													
Goldenrod	954	61													
Bluebell	1033.5	37	YTW445AT463AEK	YTW445AT		15.62		YTW463AE	2.69	1.25	1.00	727	L727	YNA49RT15H	L727
Larkspur	1033.5	61													
Marigold	1113	37													
	1113	61													
Hawthorn	1192.6	61	YTW451AT463AEK	YTW451AT											
Nacrcissus	1272	61													
Columbine	1351.5	61	YTW457AT463AEK	YTW457AT	4.00	16.50	0.62					728	L728	YNA52RT15H	L728
Carnation	1431	61													
Coreopsis	1590	61	YTW463AT463AEK	YTW463AT		17.13								YNA54RT15H	
Jessamine	1750	61	YTW47AT47AEK	YTW47AT		16.38		YTW47AE						YNA56RT15H	L729
Cowslip	2000	91	YTW48AT484AEK	YTW48AT				YTW484AE				735	L735	YNA58RT15H	L735
Sagebrush	2250	91	YTW484AT484AEK	YTW484AT										YNA59RT15H	
Lupine	2300	61	YTW486AT486AEK	YTW486AT		18.50									
	2500	91						YTW486AE	4.00	3.12	1.25	740	L740	YNA594RT15H	L740

* Overlap Crimp.
‡ Wide dies may be used on aluminum only, add suffix "W" to part number (example: L725W).

Complete Assembly: Includes Aluminum Body, Steel eye, 15 degree terminal and aluminum hardware.
For stainless steel hardware add SS to the end of the catalog number. For complete assembly (example: YTW391A431AEKSS) or to terminal (YNA43R15HSS) if ordered separately. For assembly without terminal and hardware add NT to the end of the complete catalog number (example: YTW391A431AEKNT).

Blue highlighted items are industry standard and most frequently ordered.

TYPES YTW-AD-AEK, YTW-AD, YTW-AE, YNA-RH

Double Pad Full Tension Deadend for Stranded Aluminum Cable

Full tension compression deadend for SAC transmission lines. One design for applications up to and including 230 kV. Two hole NEMA tap pad supplied through 636 kcmil. Larger sizes have 4 hole NEMA pad. Standard 15° tap pad when used with YNAR15H terminal provides either 0° or 30° tap. Aluminum body is pre-filled with PENETROX™ joint compound and capped.

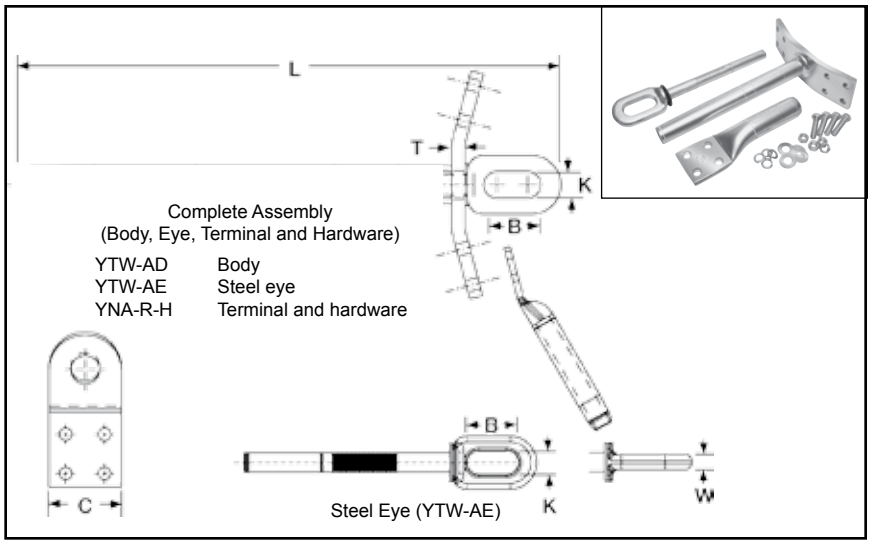

Aluminum			Double Pad		Inches			Steel Eye	Inches			Tools		Terminal with Hardware	Terminal Die*‡
Conductor Name	kcmil	Str.	Complete Assembly	Aluminum Body	C	L	T		B	K	W	Die Index	Y60BHU*‡		
Tulip	336.4	19	YTW301AD331AEK	YTW301AD	2.25	9.62	0.50	YTW331AE	2.50	0.88	0.62	717	L717	YNA32R15H	L717
	350	37													
Canna	397.5	19	YTW311AD331AEK	YTW311AD								719	L719	YNA34R15H	L719
	400	37													
Cosmos	450	37	YTW331AD331AEK	YTW331AD		9.75									
	477	19													
Syringa	477	37													
Hyacinth	500	37	YTW351AD351AEK	YTW351AD		11.62		YTW351AE				720	L720	YNA36R15H	L720
Dahlia	556.5	19													
Mistletoe	556.5	37													
Orchid	600	61	YTW361AD39AEK	YTW361AD		12.25		YTW39AE			0.69	722	L722	YNA39R15H	L722
	636	37													
Violet	715.5	37	YTW39AD39AEK	YTW39AD	3.25	12.75						724	L724	YNA43R15H	L724
Nasturtium	715.5	61													
Cattail	750	61													
Arbutus	795	37	YTW391AD431AEK	YTW391AD		14.38		YTW431AE	2.69	1.25	0.75				
Lilac	795	61													
	800	61													
Anemone	874.5	37	YTW431AD431AEK	YTW431AD		14.75						725	L725	YNA451R15H	L725
Crocus	874.5	61													
Magnolia	954	37													
Goldenrod	954	61													
Bluebell	1033.5	37	YTW445AD463AEK	YTW445AD		15.62		YTW463AE			1.00	727	L727	YNA49R15H	L727
Larkspur	1033.5	61													
Marigold	1113	37													
	1113	61													
Hawthorn	1192.6	61	YTW451AD463AEK	YTW451AD											
Nacrcissus	1272	61													
Columbine	1351.5	61	YTW457AD463AEK	YTW457AD	4.00	16.50	0.62					728	L728	YNA52R15H	L728
Carnation	1431	61													
Coreopsis	1590	61	YTW463AD463AEK	YTW463AD		17.13								YNA54R15H	
Jessamine	1750	61	YTW47AD47AEK	YTW47AD		16.38		YTW47AE						YNA56R15H	L729
Cowslip	2000	91	YTW48AD484AEK	YTW48AD				YTW484AE				735	L735	YNA58R15H	L735
Sagebrush	2250	91	YTW484AD484AEK	YTW484AD										YNA59R15H	
Lupine	2300	61	YTW486AD486AEK	YTW486AD		18.50									
	2500	91						YTW486AE	4.00	3.12	1.25	740	L740	YNA594R15H	L740

* Overlap Crimp.
‡ Wide dies may be used on aluminum only, add suffix "W" to part number (example: L725W).

Complete Assembly: Includes Aluminum Body, Steel eye, 15 degree terminal and aluminum hardware.
For stainless steel hardware add SS to the end of the catalog number. For complete assembly (example: YTW391A431AEKSS) or to terminal (YNA43R15HSS) if ordered separately. For assembly without terminal and hardware add NT to the end of the complete catalog number (example: YTW391A431AEKNT).

Blue highlighted items are industry standard and most frequently ordered.

TYPES YTW-ADT-AEK, YTW-ADT, YTW-AE, YNA-RTH EHV

Double Pad, EHV Full Tension Deadend for Stranded Aluminum Cable

Full tension compression deadend for SAC transmission line at 345 kV and over. Two hole NEMA tap pad supplied through 636 kcmil. Larger sizes have 4 hole NEMA pad. Standard 15° tap pad when used with YNAR15H terminal provides either 0° or 30° tap. Aluminum body is pre-filled with PENETROX™ joint compound and capped.

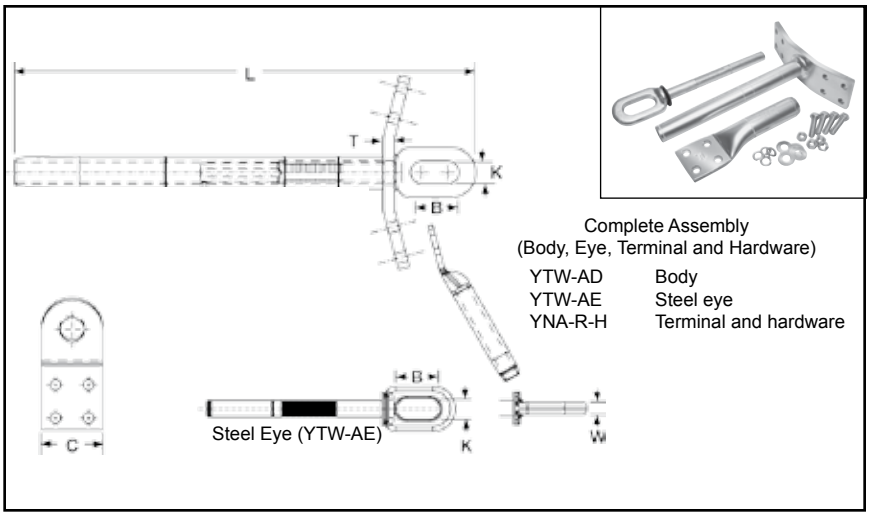

Aluminum			Double Pad		Inches			Steel Eye	Inches			Tools		Terminal with Hardware	Terminal Die*‡
Conductor Name	kcmil	Str.	Complete Assembly	Aluminum Body	C	L	T		B	K	W	Die Index	Y60BHU*‡		
Tulip	336.4	19	YTW301ADT331AEK	YTW301ADT	2.25	9.62	0.50	YTW331AE	2.50	0.88	0.62	717	L717	YNA32R15H	L717
	350	37													
Canna	397.5	19	YTW311ADT331AEK	YTW311ADT								719	L719	YNA34R15H	L719
	400	37													
Cosmos	450	37	YTW331ADT331AEK	YTW331ADT		9.75									
	477	19													
Syringa	477	37													
Hyacinth	500	37	YTW351ADT351AEK	YTW351ADT		11.62		YTW351AE				720	L720	YNA36R15H	L720
Dahlia	556.5	19													
Mistletoe	556.5	37													
Orchid	600	61	YTW361ADT39AEK	YTW361ADT		12.25		YTW39AE			0.69	722	L722	YNA39R15H	L722
	636	37													
Violet	715.5	37	YTW39ADT39AEK	YTW39ADT	3.25	12.75						724	L724	YNA43R15H	L724
Nasturtium	715.5	61													
Cattail	750	61													
Arbutus	795	37	YTW391ADT431AEK	YTW391ADT		14.38		YTW431AE			0.75				
Lilac	795	61													
	800	61													
Anemone	874.5	37	YTW431ADT431AEK	YTW431ADT		14.75						725	L725	YNA451R15H	L725
Crocus	874.5	61													
Magnolia	954	37													
Goldenrod	954	61													
Bluebell	1033.5	37	YTW445ADT463AEK	YTW445ADT		15.62		YTW463AE	2.69	1.25	1.00	727	L727	YNA49R15H	L727
Larkspur	1033.5	61													
Marigold	1113	37													
	1113	61													
Hawthorn	1192.6	61	YTW451ADT463AEK	YTW451ADT											
Nacrcissus	1272	61													
Columbine	1351.5	61	YTW457ADT463AEK	YTW457ADT	4.00	16.50	0.62					728	L728	YNA52R15H	L728
Carnation	1431	61													
Coreopsis	1590	61	YTW463ADT463AEK	YTW463ADT		17.13								YNA54R15H	
Jessamine	1750	61	YTW47ADT47AEK	YTW47ADT		16.38		YTW47AE						YNA56R15H	L729
Cowslip	2000	91	YTW48ADT484AEK	YTW48ADT				YTW484AE				735	L735	YNA58R15H	L735
Sagebrush	2250	91	YTW484ADT484AEK	YTW484ADT										YNA59R15H	
Lupine	2300	61	YTW486ADT486AEK	YTW486ADT		18.50									
	2500	91						YTW486AE	4.00	3.12	1.25	740	L740	YNA594R15H	L740

* Overlap Crimp.
‡ Wide dies may be used on aluminum only, add suffix "W" to part number (example: L725W).

Complete Assembly: Includes Aluminum Body, Steel eye, 15 degree terminal and aluminum hardware.
For stainless steel hardware add SS to the end of the catalog number. For complete assembly (example: YTW391A431AEKSS) or to terminal (YNA43R15HSS) if ordered separately. For assembly without terminal and hardware add NT to the end of the complete catalog number (example: YTW391A431AEKNT).

Blue highlighted items are industry standard and most frequently ordered.

TYPE YTS-A

Full Tension Splice for Stranded Aluminum Transmission Line

Full tension splice for Stranded Aluminum Transmission line up to and including 230 kV. Manufactured of aluminum tube with staked-in cable stop. Pre-filled with PENETROX™ joint compound and capped.

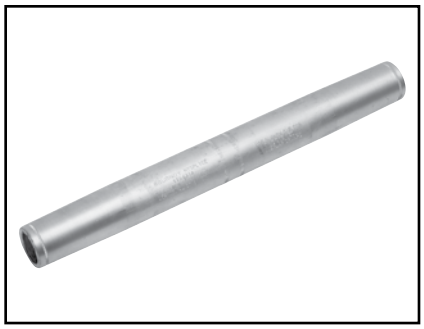

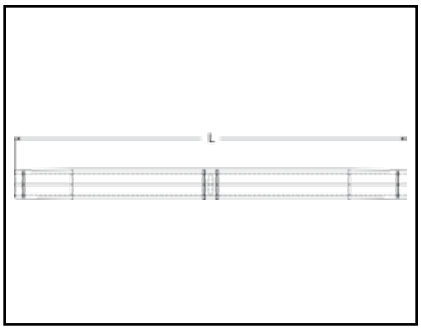

Catalog Number	Conductor			Inches L	Tool, Die Sets			
	Conductor Name	Aluminum			Die Index	Y45*	Y46*	Y60BHU* ‡
		kcmil	Strands					
YTS301A	Tulip	336.4	19	9.13	717	S725	P725	L717
YTS301A		350	37			S725	P725	
YTS311A	Canna	397.5	19	9.29	719	S719	P719	L719
YTS311A		400	37			S719	P719	
YTS331A	Cosmos	450	37	9.27		S719	P719	
YTS331A		477	19			S719	P719	
YTS331A	Syringa	477	37			S719	P719	
YTS351A	Hyacinth	500	37	11.18	720	S720	P720	L720
YTS351A	Dahlia	556.5	19			S720	P720	
YTS351A	Mistletoe	556.5	37			S720	P720	
YTS361A	Orchid	600	61	12.14	722	S722	P722	L722
YTS361A		636	37			S722	P722	
YTS39A	Violet	715.5	37	13.36	724	S724	P724	L724
YTS39A	Nasturtium	715.5	61			S724	P724	
YTS39A	Cattail	750	61			S724	P724	
YTS391A	Arbutus	795	37	15.81		S724	P724	
YTS391A	Lilac	795	61			S724	P724	
YTS391A		800	61			S724	P724	
YTS431A	Anemone	874.5	37	16.51	725	S725	P725	L725
YTS431A	Crocus	874.5	61			S725	P725	
YTS431A	Magnolia	954	37			S725	P725	
YTS431A	Goldenrod	954	61			S725	P725	
YTS445A	Bluebell	1033.5	37	18.51	727	—	—	L727
YTS445A	Larkspur	1033.5	61			—	—	
YTS445A	Marigold	1113	37			—	—	
YTS445A		1113	61			—	—	
YTS451A	Hawthorn	1192.6	61	18.40		—	—	
YTS451A	Nacrcissus	1272	61			—	—	
YTS457A	Columbine	1351.5	61	19.96	728	—	—	L728
YTS457A	Carnation	1431	61			—	—	
YTS463A	Coreopsis	1590	61	21.50		—	—	
YTS47A	Jessamine	1750	61	19.96	728	—	—	L728
YTS48A		2000	169	21.62	735	—	—	L735
YTS484A		2300	61	20.19		—	—	
YTS486A	Lupine	2500	91	24.28	740	—	—	L740

* Overlap Crimp.
‡ Wide dies may be used on aluminum only, add suffix "W" to part number (example: L725W).

Blue highlighted items are industry standard and most frequently ordered.

TYPE YTS-AR

Full Tension Splice for ACAR

Full tension splice for ACAR transmission lines up to and including 230 kV. Manufactured of aluminum tube with staked in cable stop. Pre-filled with PENETROX™ joint compound and capped.

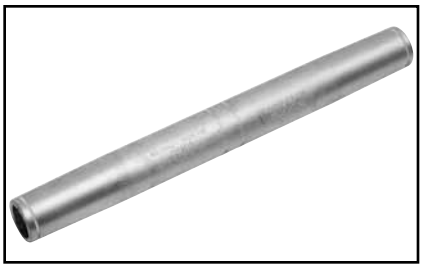

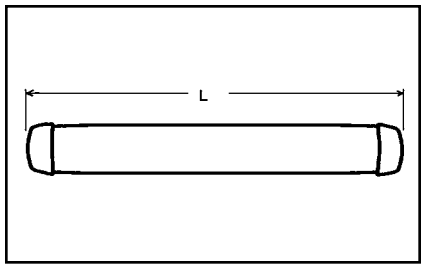

Catalog Number	Conductor ACAR kcmil	Conductor ACAR Str.	Inches L	Tool, Die Sets: Die Index	Y45*	Y46*	Y60BHU* ‡
YTS32AR	395.1	12-7	15.18"	717	S717	P71 7	L717
	395.2	15-7					
YTS39AR	634.9	12-7	16.39"	722	S722	P722	L722
	649.5	18-19					
	653.1	15-4					
		12-7					
		18-19					
YTS451AR	840.2	24-13	19.58"	725	S725	P725	L725
	853.7	30-7					
		24-13					
	862.7	18-19					
	927.2	30-7					
		24-13					
		18-19					
YTS48AR	983.1	30-7	21.36"	727	—	—	L727
	1012.2	24-13					
	1024.5	30-7					
		24-13					
		18-19					
	1081	30-7					
		24-13					
		18-19					
YTS49AR	1109	30-7	21.42"				
		24-13					
		18-19					
	1172	30-7					
		24-13					
		18-19					
	1198	30-7					
		24-13					
		18-19					
		42-19					
YTS51AR	1277	42-19	21.56"				
		54-7					
	1280	30-7					
		24-13					
		18-19					
YTS55AR	1534	42-19	25.30"	728			L728
YTS59AR	2267	54-7	23.50"	—			**
		48-13					
	2277	42-19					
	2338	54-7					
		48-13					
		42-19					
	2335	72-19					
		30-61					
YTS592AR	2493	54-37	28.34"				***

* Overlap Crimp.
‡ Wide dies may be used on aluminum only, add suffix "W" to part number (example: L725W).

** Use die H814 in Alcoa Press H2H, die M814 in Alcoa Press 150B and die MH814 in Alcoa Press 100A. These dies are manufactured by BURNDY®.

***Use die H990 in Alcoa Press H2H, die M990 in Alcoa Press 150B and die MH990 in Alcoa Press 100A. These dies are manufactured by BURNDY®.

Blue highlighted items are industry standard and most frequently ordered.

TYPE YTS-AT EHV

Full Tension Splice for Stranded Aluminum Transmission Line

Full tension splice for Stranded Aluminum Transmission line at 345 kV and over. Manufactured of aluminum tube with staked-in cable stop. Pre-filled with PENETROX™ joint compound and capped.

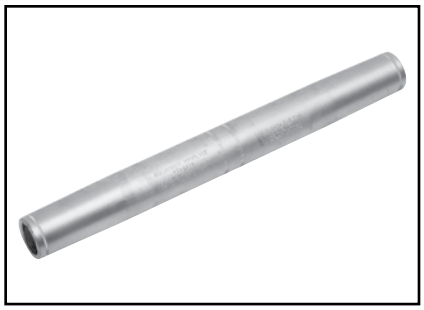

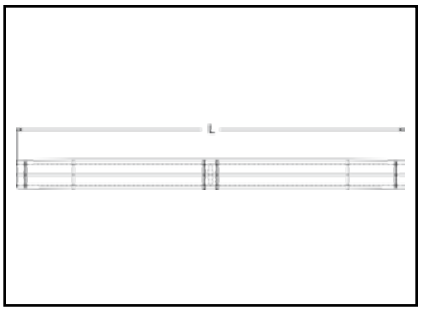

Catalog Number	Conductor			Inches L	Tool, Die Sets			
	Conductor Name	Aluminum			Die Index	Y45*	Y46*	Y60BHU* ‡
		kcmil	Strands					
YTS301AT	Tulip	336.4	19	9.75	717	S725	P725	L717
YTS301AT		350	37			S725	P725	
YTS311AT	Canna	397.5	19	9.99	719	S719	P719	L719
YTS311AT		400	37			S719	P719	
YTS331AT	Cosmos	450	37	10.01		S719	P719	
YTS331AT		477	19			S719	P719	
YTS331AT	Syringa	477	37			S719	P719	
YTS351AT	Hyacinth	500	37	11.88	720	S720	P720	L720
YTS351AT	Dahlia	556.5	19			S720	P720	
YTS351AT	Mistletoe	556.5	37			S720	P720	
YTS361AT	Orchid	600	61	12.92	722	S722	P722	L722
YTS361AT		636	37			S722	P722	
YTS39AT	Violet	715.5	37	14.36	724	S724	P724	L724
YTS39AT	Nasturtium	715.5	61			S724	P724	
YTS39AT	Cattail	750	61			S724	P724	
YTS391AT	Arbutus	795	37	16.36		S724	P724	
YTS391AT	Lilac	795	61			S724	P724	
YTS391AT		800	61			S724	P724	
YTS431AT	Anemone	874.5	37	17.92	725	S725	P725	L725
YTS431AT	Crocus	874.5	61			S725	P725	
YTS431AT	Magnolia	954	37			S725	P725	
YTS431AT	Goldenrod	954	61			S725	P725	
YTS445AT	Bluebell	1033.5	37	19.57	727	—	—	L727
YTS445AT	Larkspur	1033.5	61			—	—	
YTS445AT	Marigold	1113	37			—	—	
YTS445AT		1113	61			—	—	
YTS451AT	Hawthorn	1192.6	61	19.24		—	—	
YTS451AT	Nacrcissus	1272	61			—	—	
YTS457AT	Columbine	1351.5	61	21.08	728	—	—	L728
YTS457AT	Carnation	1431	61			—	—	
YTS463AT	Coreopsis	1590	61	22.56		—	—	
YTS47AT	Jessamine	1750	61	21.08	728	—	—	L728
YTS48AT		2000	169	23.02	735	—	—	L735
YTS484AT		2300	61	23.00		—	—	
YTS486AT	Lupine	2500	91	24.28	740	—	—	L740

* Overlap Crimp.
‡ Wide dies may be used on aluminum only, add suffix "W" to part number (example: L725W).

Blue highlighted items are industry standard and most frequently ordered.

TYPE YTS-ART EHV

Full Tension Splice for ACAR

Full tension splice for ACAR transmission lines at 345 kV and over. Manufactured of aluminum tube with staked-in cable stop. Pre-filled with PENETROX™ joint compound and capped.

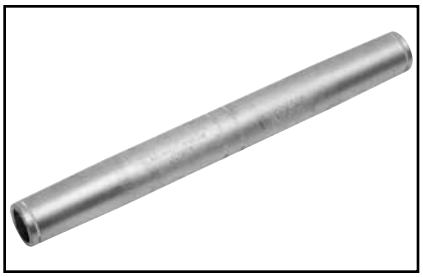

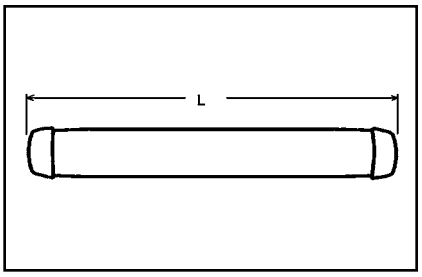

Catalog Number	Conductor ACAR kcmil	Conductor ACAR Strands	Inches L	Tool, Die Sets: Die Index	Y45*	Y46*	Y60BHU* ‡
YTS32ART	395.1	12-7	15.52"	717	S717	P71 7	L717
	395.2	15-7					
YTS39ART	634.9	12-7	16.95"	722	S722	P722	L722
	649.5	18-19					
	653.1	15-4					
		12-7					
		18-19					
YTS451ART	840.2	24-13	20.36"	725	S725	P725	L725
	853.7	30-7					
		24-13					
	862.7	18-19					
	927.2	30-7					
		24-13					
		18-19					
YTS48ART	983.1	30-7	22.36"	727	—	—	L727
	1012.2	24-13					
	1024.5	30-7					
		24-13					
		18-19					
	1081	30-7					
		24-13					
		18-19					
YTS49ART	1109	30-7	22.38"				
		24-13					
		18-19					
	1172	30-7					
		24-13					
		18-19					
	1198	30-7					
		24-13					
		18-19					
		42-19					
YTS51ART	1277	42-19	22.46"				
		54-7					
	1280	30-7					
		24-13					
		18-19					
YTS55ART	1534	42-19	26.40"	728			L728
YTS59ART	2267	54-7	24.75"	814			**
		48-13					
	2277	42-19					
	2338	54-7					
		48-13					
		42-19					
	2335	72-19					
		30-61					
YTS592ART	2493	54-37	29.40"	990			***

* Overlap Crimp.
‡ Wide dies may be used on aluminum only, add suffix "W" to part number (example: L725W).

** Use die H814 in Alcoa Press H2H, die M814 in Alcoa Press 150B and die MH814 in Alcoa Press 100A. These dies are manufactured by BURNDY®.

***Use die H990 in Alcoa Press H2H, die M990 in Alcoa Press 150B and die MH990 in Alcoa Press 100A. These dies are manufactured by BURNDY®.

Blue highlighted items are industry standard and most frequently ordered.

TYPES YNA-R15 & YNA-R

Compression Terminal for ACAR and Stranded Aluminum Cable

Compression terminal ACAR and Stranded Aluminum Cable. Two hole NEMA tongue supplied through 650 kcmil Aluminum. For transmission line up to and including 230 kV supplied on tongue through 650 kcmil aluminum. Four hole NEMA supplied on larger sizes. When used with YTW Deadends the 15° angle tongue provides either a 0° or 30° tap. Uses same dies as equivalent full-tension sleeve or deadend. Barrel pre-filled with PENETROX™ joint compound and capped. Pad coated with oxide-retardant.

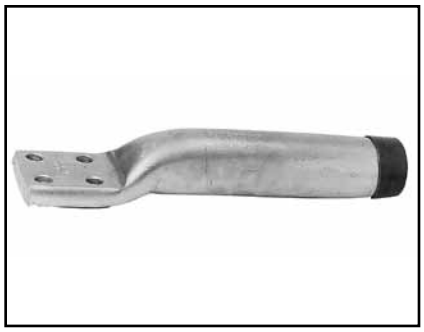

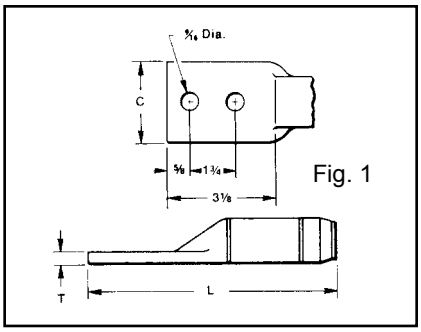

Fig. 1

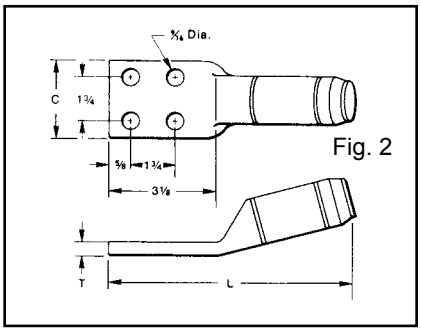

Fig. 2

Catalog Number †		Conductor		Fig. #	C	L 15°	L Straight	T	Tools, Die Sets			
15°	Straight	ACAR	Aluminum						Die Index	Y45*	Y46*	Y60BHU*‡
YNA32R15	YNA32R	395.1 - 395.2	336.4 - 350	1	1.68"	8.92"	8.96"	0.39"	717	S717	P717	L717
YNA34R15	YNA34R	—	397.5 - 477		1.78"	9.31"	9.08"	0.46"	719	S719	P719	L719
YNA36R15	YNA36R	—	500 - 556.5		1.96"	9.62"	9.47"	0.48"	720	S720	P720	L720
YNA39R15	YNA39R	634.9 - 653.1	600 - 650		2.08"	10.09"	9.84"	0.53"	722	S722	P722	L722
YNA43R15	YNA43R	—	700 - 800	2	3.07"	10.16"	10.07"	0.36"	724	S724	P724	L724
YNA451R15	YNA451R	840.2 - 927.2	795 - 1000		3.22"	10.21"	10.28"	0.45"	725	S725	P725	L725
YNA49R15	YNA49R	983.1 - 1198	1033.5 - 1272			10.35"	10.46"	0.52"	727	—	—	L727
YNA52R15	YNA52R	1277 - 1280	1351.5 - 1510			12.09"	12.24"	0.71"	728			L728
YNA54R15	YNA54R	1534	1590 - 1600	1		13.30"	13.46"	0.71"	728			L728
YNA56R15	YNA56R	1650 (42/19 STR)	1700 - 1800	2	3.44"	12.50"	12.74"	0.86"	729			L729
YNA58R15	YNA58R	—	2000	1	3.47"	13.25"	13.34"	0.76"	735			L735
YNA59R15	YNA59R	—	2250 - 2300		3.57"	13.12"	13.25"	0.61"	735			L735
YNA594R15	YNA594R	2267 - 2500	2500		3.70"	12.81"	14.35"	0.68"	740			L740

† To specify mounting hardware for bolting to corresponding deadend pad, add suffix "H" to catalog number (example: YNA54RTH)
* Overlap Crimp.
‡ Wide dies may be used on aluminum only, add suffix "W" to part number (example: L725W).

TYPES YNA-RT15, YNA-RT, EHV

Compression Terminal for ACAR and Stranded Aluminum Cable

Compression terminal ACAR and Stranded Aluminum Cable. Two hole NEMA tongue supplied through 650 kcmil Aluminum. For transmission line up to and including 230 kV supplied on tongue through 650 kcmil Aluminum. Four hole NEMA supplied on larger sizes. When used with YTW Deadends the 15° angle tongue provides either a 0° or 30° tap. Uses same dies as equivalent full-tension sleeve or deadend. Barrel pre-filled with PENETROX™ joint compound and capped. Pad coated with oxide-retardant.

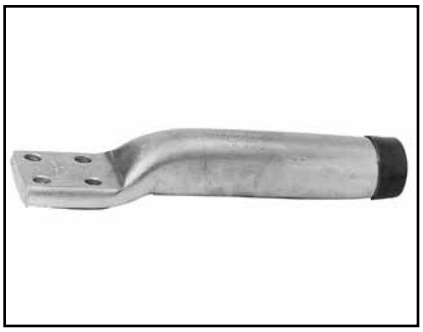

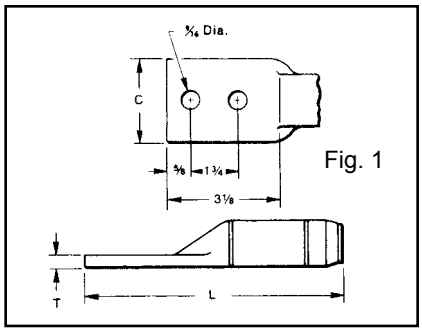

Fig. 1

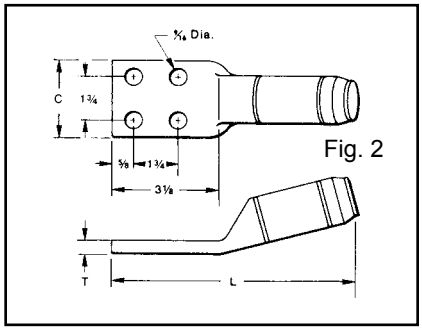

Fig. 2

Catalog Number †		Conductor		Fig. No.	C	L 15°	L Straight	T	T 15	Tools, Die Sets			
15°	Straight	ACAR	Aluminum							Die Index	Y45*	Y46*	Y60BHU*‡
YNA32RT15	**YNA32RT**	395.1 - 395.2	336.4 - 350	1	1.68"	9.04"	9.14"	0.39"	0.39"	717	S717	P717	L717
YNA34RT15	**YNA34RT**	—	397.5 - 477		1.78"	9.21"	9.30"	0.46"	0.46"	719	S719	P719	L719
YNA36RT15	**YNA36RT**	—	500 - 556.5		1.96"	9.63"	9.70"	0.48"	0.48"	720	S720	P720	L720
YNA39RT15	**YNA39RT**	650 (37)	600 - 650		2.08"	10.02"	10.09"	0.53"	0.53"	722	S722	P722	L722
YNA43RT15	**YNA43RT**	—	700 - 800	2	3.22"	10.21"	10.32"	0.36"	0.36"	724	S724	P724	L724
YNA451RT15 ‡‡	**YNA451RT ‡‡**	850 (37) 900 (37)	795 - 1000			10.65"	10.57"	0.45"	0.45"	725	S725	P725	L725
YNA49RT15 ‡‡	**YNA49RT ‡‡**	1000 (61) 1100 (61)	1033.5 - 1272			10.94"	10.77"	0.52"	0.52"	727	—	—	L727
YNA52RT15 ‡‡	**YNA52RT ‡‡**	4 (7)	1351.5 - 1510			12.62"	13.82"	0.71"	0.71"	728			L728
YNA54RT15 ‡‡	**YNA54RT ‡‡**	1534	1590 - 1600			—	—	0.71"	0.71"	728			L728
YNA56RT15 ‡‡	**YNA56RT ‡‡**	1650 (42/19 STR)	1700 - 1800		3.44"	13.36"	13.76"	0.86"	0.86"	729			L729
YNA58RT15 ‡‡	**YNA58RT ‡‡**	—	2000		3.47"	14.08"	13.70"	0.80"	0.80"	735			L735
YNA59RT15 ‡‡	**YNA59RT ‡‡**	—	2250 - 2300		3.57"	13.75"	13.54"	0.64"	0.64"	735			L735
YNA594RT15 ‡‡	**YNA594RT ‡‡**	2267 - 2500	2500		3.70"	—	—	0.68"	0.68"	740			L740

† To specify mounting hardware for bolting to corresponding deadend pad, add suffix "H" to catalog number (example: YNA54RTH)

* Overlap crimps

‡ Wide dies may be used, add suffix "W" to part number (example: L725W)

‡‡ If shielding caps are required for this item, use Catalog Number STS43A-4N

Blue highlighted items are industry standard and most frequently ordered.

TYPE YNS-R

Jumper Loop Sleeve for ACAR and Stranded Aluminum Conductor

Jumper sleeve for ACAR and Stranded Aluminum Cable up to and including 230 kV. Sleeve prefilled with PENETROX™ joint compound and capped.

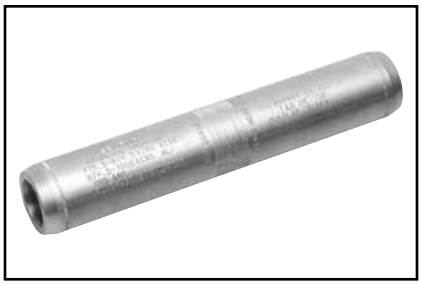

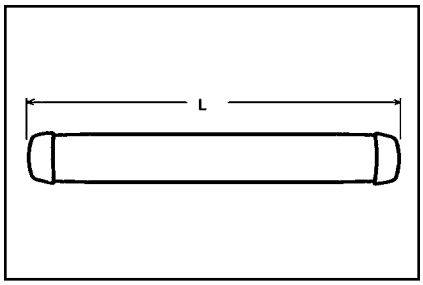

Catalog Number	Conductor		Inches L	Tools, Die Sets			
	ACAR	Aluminum		Y45*	Y46*	Y60BHU*‡	Die Index
YNS32R	336.4 - 350	336.4 - 350	8.60	S717	P717	L717	717
YNS34R	397.5 - 477	397.5 - 477	8.68	S719	P719	L719	719
YNS36R	500 - 556.5	500 - 556.5	9.20	S720	P720	L720	720
YNS39R	600 - 650	600 - 650	9.76	S722	P722	L722	722
YNS43R	700 - 800	700 - 800	9.98	S724	P724	L724	724
YNS451R	795 - 1000	795 - 1000	10.04	S725	P725	L725	725
YNS49R	1033.5 - 1272	1033.5 - 1272	10.08	—	—	L727	727
YNS52R	1351.5 - 1510	1351.5 - 1510	15.48	—	—	L728	728
YNS54R	1590 - 1600	1590 - 1600	15.48	—	—	L728	728
YNS56R	1700 - 1800	1700 - 1800	14.80	—	—	L729	729
YNS58R	2000	2000	14.74	—	—	L735	735
YNS59R	2250 - 2300	2250 - 2300	14.56	—	—	L735	735
YNS594R	2500	2500	14.04	—	—	L740	740

* Overlap crimps
‡ Wide dies may be used, add suffix "W" to part number (example: L725W).

TYPE YNS-RT EHV

Jumper Loop Sleeve for ACAR and Stranded Aluminum Conductor

Jumper sleeve for ACAR and Stranded Aluminum Cable over 230 kV. Sleeve prefilled with PENETROX™ joint compound and capped.

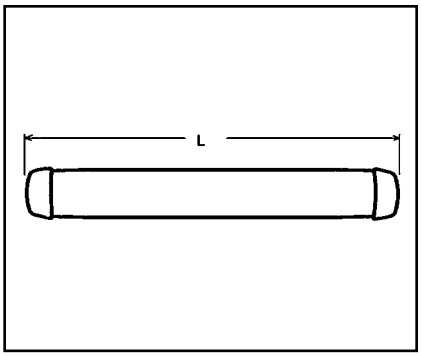

Catalog Number	Conductor (Kcmil)		Inches L	Tools, Die Sets			
	ACAR	Aluminum		Die Index	Y45*	Y46*	Y60BHU*‡
YNS32RT	395.1 - 395.2	336.4 - 350	8.96	717	S717	P717	L717
YNS34RT	–	397.5 - 477	9.10	719	S719	P719	L719
YNS36RT	–	500 - 556.5	9.64	720	S720	P720	L720
YNS39RT	634.9 - 653.1	600 - 650	10.26	722	S722	P722	L722
YNS43RT	–	700 - 800	10.48	724	S724	P724	L724
YNS451RT	840.2 - 927.2	795 - 1000	10.60	725	S725	P725	L725
YNS49RT	983.1 - 1198	1033.5 - 1272	10.66	727	—	—	L727
YNS52RT	1277 - 1280	1351.5 - 1510	16.20	728	—	—	L728
YNS54RT	1534	1590 - 1600	16.11	728	—	—	L728
YNS56RT	1650 (42-19 STR)	1700 - 1800	15.58	729	—	—	L729
YNS58RT	–	2000	15.46	735	—	—	L735
YNS59RT	–	2250 - 2300	15.14	735	—	—	L735
YNS594RT	2267 - 2500	2500	16.53	740	—	—	L740

* Overlap crimps
‡ Wide dies may be used, add suffix "W" to part number (example: L725W).

TYPE YNTA-R

T-Tap With Pad for ACAR and Stranded Aluminum Cable

Two-piece compression T-Tap with pad for ACAR and Stranded aluminum transmission lines.

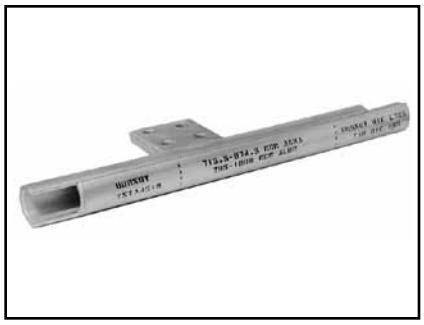

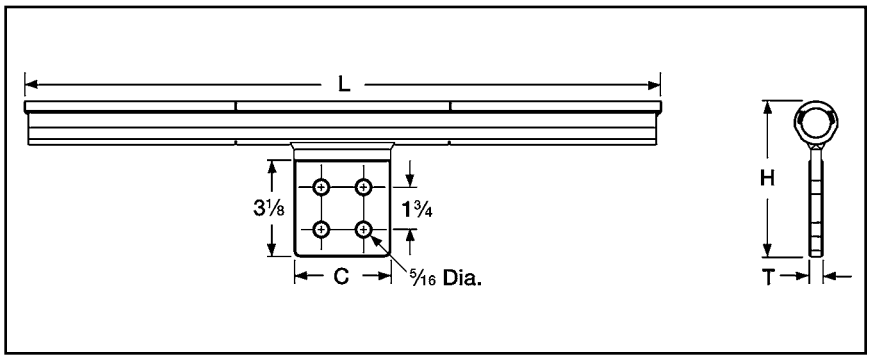

Catalog Number	Conductor (kcmil)		Inches				Tools, Die Sets			
	ACAR	Aluminum	L	C	H	T	Die Index	Y45*	Y46*	Y60BHU*‡
YNTA32R	350 (19) - 400 (19)	336.4 - 350	15.46	2.00	4.94	0.50	717	S717	P717	L717
YNTA34R	—	397.5 - 477	15.60	2.00	5.05	0.50	719	S719	P719	L719
YNTA36R	—	500 - 556.5	16.29	2.25	5.16	0.56	720	S720	P720	L720
YNTA39R	600 (37) - 650 (37)	600 - 650	16.69	2.25	5.25	0.56	722	S722	P722	L722
YNTA43R	—	700 - 800	17.48	3.25	5.36	0.56	724	S724	P724	L724
YNTA451R	800 (37) - 950 (37)	795.5 - 1000	17.60	3.25	5.55	0.56	725	S725	P725	L725
YNTA49R	950 (37) - 1100 (61)	1033.5 - 1272.2	17.66	3.25	5.72	0.56	727	—	—	L727
YNTA54R	—	1351.5 - 1600	21.61	3.25	6.00	0.69	728	—	—	L728
YNTA56R	1650	1700 - 1800	23.65	3.59	6.25	0.69	729	—	—	L729
YNTA58R	—	2000	23.53	3.59	6.25	0.69	735	—	—	L729
YNTA59R	—	2300	23.21	3.59	6.25	0.69	735	—	—	L735
YNTA594R	2267 - 2500	2500	24.30	3.59	6.35	0.69	740	—	—	L740

Two hole NEMA pads standard for conductors up to 650 kcmil.
Four hole NEMA pads on larger condcutor sizes.
* Overlap crimps.
** For Extra High Voltage (EHV) applications order two tap pad shielding caps STS43A4N. Catalog number indicates 1 cap. Two caps required per assembly.
‡ Wide dies may be used add suffix "W" to the part number (example: L725W).

TYPE YNT-R-R

Two-Piece Compression T-Tap for ACAR and Stranded Aluminum Transmission Lines

Installed with same dies as equivalent full tension splice. Tap element pre-filled with PENETROX™ joint compound.

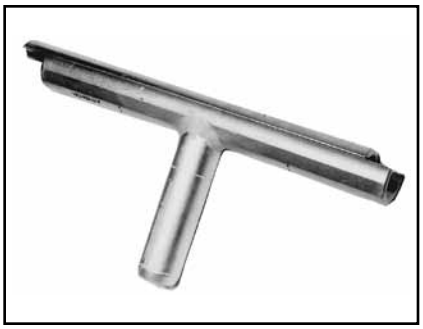

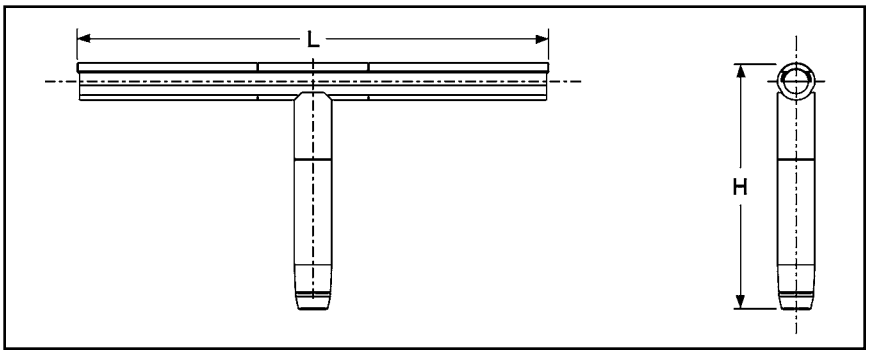

Catalog Number	Conductor (kcmil) Run and Tap ACAR	Conductor (kcmil) Run and Tap Aluminum	Inches L	Tools, Die Sets Die Index	Y45*	Y46*	Y60BHU*‡
YNT32R32R	—	336.4 - 350	15.46	717	S717	P717	L717
YNT34R34R	—	397.5 - 447	15.60	719	S719	P719	L719
YNT36R36R	—	500 - 556.5	16.29	720	S720	P720	L720
YNT39R39R	—	600 - 650	16.69	722	S722	P722	L722
YNT43R43R	—	700 - 800	17.48	724	S724	P724	L724
YNT451R451R	4 (7) AWG	795 - 1000	17.60	725	S725	P725	L725
YNT49R49R	—	1033.5 - 1272	17.66	727	—	—	L727
YNT52R52R	—	1351.5 - 1510	21.61	728	—	—	L728
YNT54R54R	—	1590 - 1600	21.61	728	—	—	L728
YNT56R56R	1650 (42/19)	1700 - 1800	23.65	729	—	—	L729
YNT58R58R	—	2000	23.53	—	—	—	L735
YNT59R59R	—	2300	23.21	735	—	—	L735
YNT594R594R	2267 - 2500	2500	24.30	740	—	—	L740

* Overlap Crimps.
** For Extra High Voltage (EHV) applications add suffix "T" to the catalog number (example: YNT49R49RT).
‡ Wide dies may be used add suffix "W" to the part number (example: L725W).

Blue highlighted items are industry standard and most frequently ordered.

TYPE YNU-R

Repair Sleeve for ACAR and Stranded Aluminum Cable

Two piece repair sleeves for restoring conductivity to damaged ACAR or Stranded Aluminum Cable transmission lines. Installed with same dies as equivalent full tension splice. Use of PENETROX™ joint compound required. For High Voltage and Extra High Voltage (EHV) Applications.

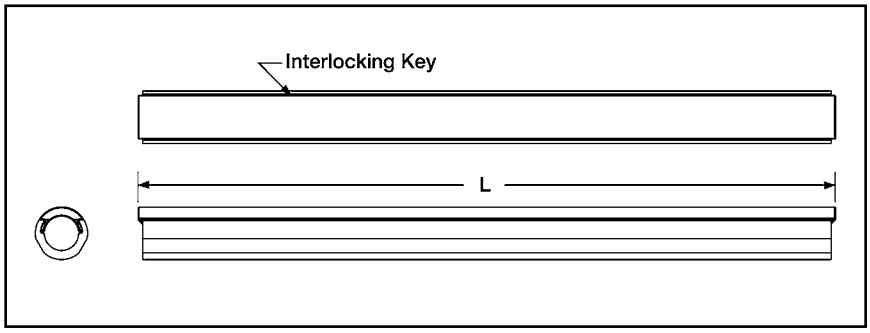

Catalog Number	Conductor (kcmil)		Inches L	Tools, Die Sets			
	ACAR	Aluminum		Die Index	Y45*	Y46*	Y60BHU*‡
YNU32R	—	336.4 - 350	14.00 in	717	P717	P717	L717
YNU34R	—	397.5 - 477	14.00 in	719	P719	P719	L719
YNU36R	—	500 - 556.5	14.00 in	720	P720	P720	L720
YNU39R	—	600 - 650	16.00 in	722	P722	P722	L722
YNU43R	—	700 - 800	16.00 in	724	P724	P724	L724
YNU451R	850 (37) - 900 (37)	795.5 - 1000	16.00 in	725	P725	P725	L725
YNU49R	—	1033.5 - 1200	16.00 in	727	—	—	L727
YNU54R	—	1351.5 - 1600	16.00 in	728	—	—	L728
YNU56R	—	1700 - 800	19.00 in	729	—	—	L729
YNU59R	—	2300 - 2500	19.00 in	735	—	—	L735
YNU594R	2267 - 2500	2500	20.00 in	740	—	—	L740
YNU595R	2500	2500	24.60 in	—	—	—	L791

* Overlap Crimps.
‡ Wide dies may be used, add suffix "W" to part number (example: L725W).

TYPE YNA-M-T

Compression Terminal for Alumoweld and EHS Steel

Compression terminal for joining Alumoweld and EHS steel to YTW-M-T or YTW-E deadend. Installed with same dies as equivalent full tension splice and deadend. Barrel is pre-filled with PENETROX™ joint compound and capped.

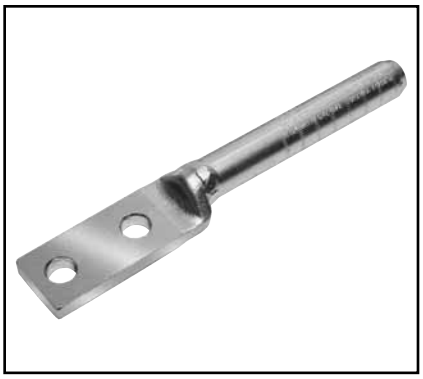

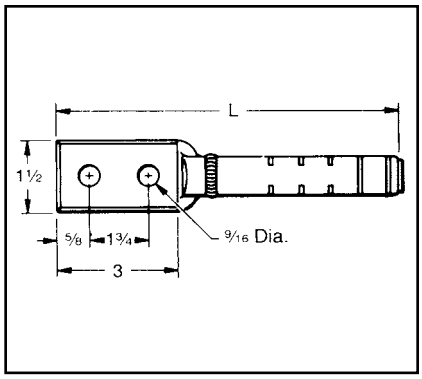

Catalog Number	Conductor		L (IN)	Die Index	Tools Dies and Sets (Number of Crimps)	
	Alumoweld	EHS Steel			Y35, Y 750, Y45†, Y46‡‡	Y60BHU*
YNA7M10T	7 #10, 3 #7	5/16" 7 str.	8.50	676 or 721	U676 (4)	L721
YNA7M8T	7 #8, 3 #5	3/8" 7 str.	9.81	668 or 723	U668 (7)	L723
YNA7M7T	7 #7, 3 #5	7/16" 7 str.	9.95	678 or 726	U678 (10)	L726
YNA7M6T	7 #6	1/2" 7 str.	9.80	679 or 726	U679 (11)	L789

* Overlap crimps.
† U Die with adapter PT-6515.
‡‡ U Die with adapter PUADP-1.

TYPE YDS-M-T

Full Tension Sleeve for Alumoweld

Full-tension splice for Alumoweld transmission lines. Five connectors accommodate eight conductor sizes. Sleeve is pre-filled with PENETROX™ joint compound and capped.

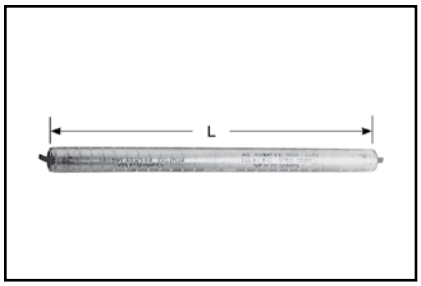

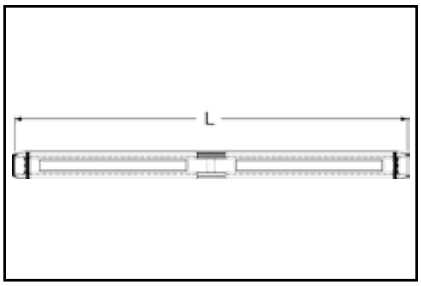

RUS Accepted

Catalog Number †††	Conductor	L (in)	Tools Dies and Sets (Number of Crimps)		
	Alumoweld		Die Index	Y35	Y60*
YDS7M10T	7 #10, 3 #7	9.91	676 or	U676 (8)	—
			721	—	L721
YDS7M9T	7 #9, 3 #6	10.41	677	U677 (10)	—
YDS7M8T	7 #8, 3 #5	12.21	668 or	U668 (13)	—
			723	—	L723
YDS7M7T	7 #7	14.56	678 or	U678 (19)	—
			726	—	L726
YDS7M6T	7 #6	15.17	679 or	U679 (2)	—
			726	—	L726

* Overlap crimps.
††† Sleeve is high strength aluminum alloy for optimum corrosion resistance.

TYPE YTS-E

Full Tension Splice for EHS Steel

Full tension splice for EHS steel guy, messenger or "static" cable. Sleeve is prefilled with PENETROX™ joint compound and capped.

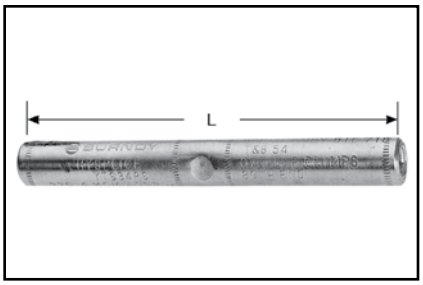

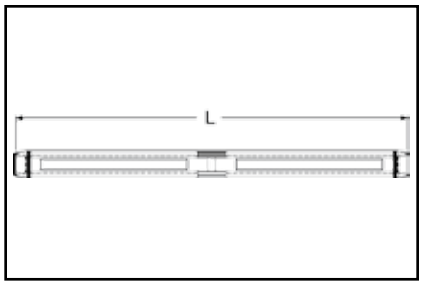

Catalog Number †	Accommodates EHS Steel	L (in)	Tools, Die Sets	
			Die Index	Y60BHU*
YTS312E	5/16" 7 Str	11.30	721	L721
YTS375E	3/8" 7 Str.	10.38	723	L723
YTS438E	7/16" 7 Str.	11.78	726	L726
YTS500E	1/2" 7 Str	16.63	789	L789

* Overlap crimps.
† Sleeve is high strength aluminum alloy for optimum corrosion resistance.

Full Tension Deadend Kit

Compression Deadend for ACCC® Conductor

Full tension Deadends for ACCC® transmission lines up to and including 230 kV. Standard 15° NEMA tap pad provides either 0° or 30° tap when BYNA-RT15HACCC terminal is used.

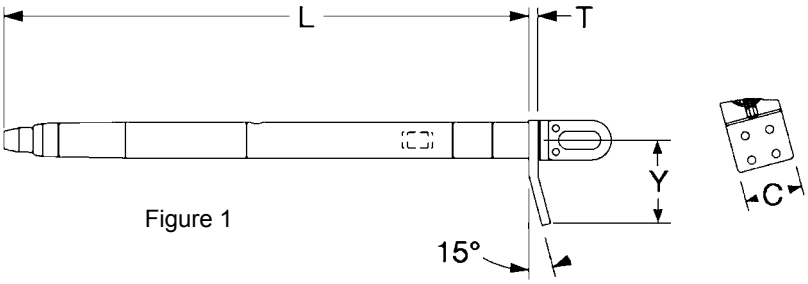

Figure 1

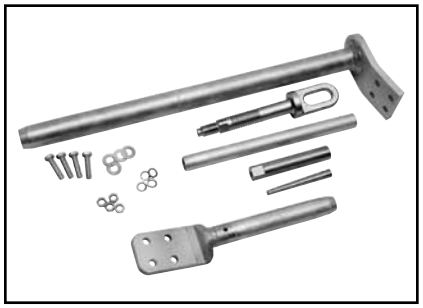

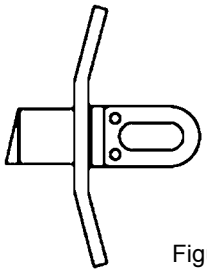
Figure 2

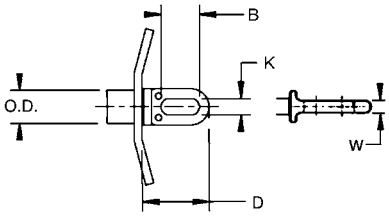

Figure 2A

Conductor Name	Size kcmil	Catalog Number Kit Assembly	Fig. No.	Dimensions - Deadend Body (Fig. 1)				Dimensions - Steel Eye (Fig. 2A)				Kit Components	Installation Tooling Y60BHU		
				L	T	C	Y	D	B	K	W	Terminal	Die* Deadend	Die* Terminal	Inspection Pin Dia.
Linnet	431	5600-1020	1	31.25 [794]	0.62 [16]	4.00 [102]	5.60 [142]	4.5 [114]	2.5 [64]	1.12 [28]	0.62 [16]	BYNA32RT15HACCC	L727W	L717W	0.748
		5600-1020D	2												
Copenhagen	440	5600-1022	1												
		5600-1022D	2												
Glasgow	473	5600-1044	1									BYNA245MRT15HACCC		L719W	
		5600-1044D	2												
Casablanca	546	5600-1028	1									BYNA36RT15HACCC		L720W	0.892
		5600-1028D	2												
Hawk	611	5600-1030	1												
		5600-1030D	2												
Lisbon	629	5600-1032	1												
		5600-1032D	2												
Dove	713	5600-1040	1									BYNA39RT15HACCC		L722W	0.962
		5600-1040D	2												
Amsterdam	733	5600-1042	1												
		5600-1042D	2												
Grosbeak	816	5600-1050	1									BYNA43RT15HACCC		L724W	1.042
		5600-1050D	2												
Brussels	839	5600-1052	1												
		5600-1052D	2												
Oslo	627	5600-1026	1	36.19 [919]				5.10 [130]	2.91 [74]	1.26 [32]	0.75 [19]	BYNA39RT15HACCC	L735W	L722W	0.962
		5600-1026D	2												
Stockholm	913	5600-1054	1									BYNA451RT15HACCC		L725W	1.164
		5600-1054D	2												
Warsaw	1016	5600-1056	1												
		5600-1056D	2												
Drake	1020	5600-1060	1												
		5600-1060D	2												
Dublin	1043	5600-1062	1												
		5600-1062D	2												

Notes:
ACCC is a Registered Trade Mark of CTC Cable Corp.
1. Deadend Assembly consists of Aluminum Body, Steel Eye and Terminal with mounting hardware.
2. Designed for corona free operation up to 230 kV, contact factory for 345 kV and 500 kV operation.
3. For stainless steel hardware, contact factory.
4. Dimensions in brackets [ ] denotes metric units and are rounded to nearest whole numbers.

* Overlap crimps.

Blue highlighted items are industry standard and most frequently ordered.

Full Tension Deadend Kit
(Continued)

Compression Deadend for ACCC® Conductor

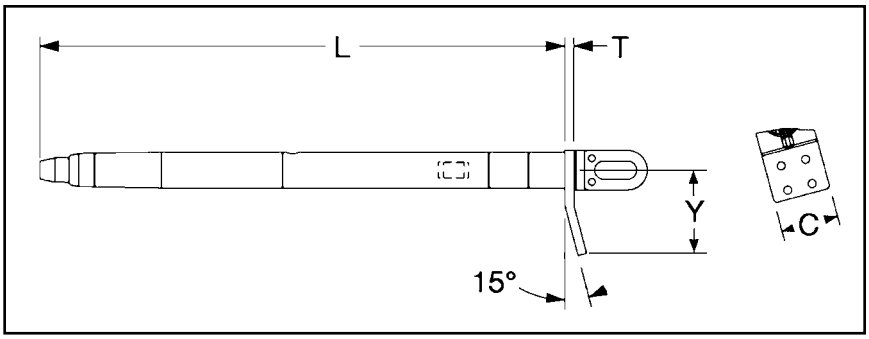

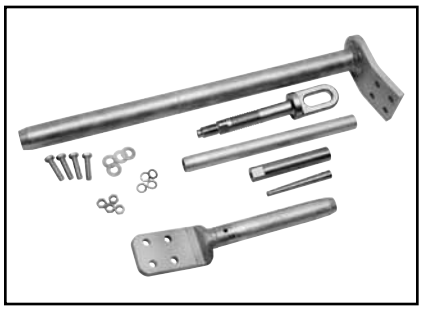

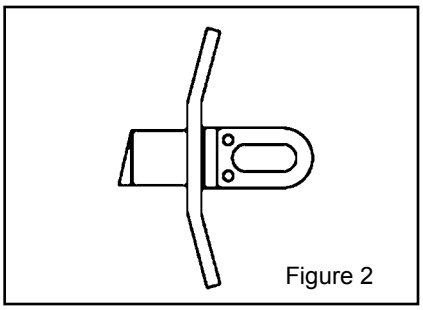
Figure 2

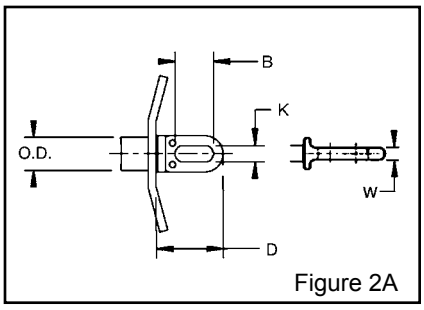

Figure 2A

Conductor Name	Size kcmil	Catalog Number Kit Assembly	Fig. No.	Dimensions - Deadend Body (Fig. 1)				Dimensions - Steel Eye (Fig. 2A)				Kit Components	Installation Tooling Y60BHU		
				L	T	C	Y	D	B	K	W	Terminal	Die* Deadend	Die* Terminal	Inspection Pin Dia.
Hamburg	1092	5600-1058	1	36.19 [919]	0.62 [16]	4.00 [102]	5.60 [142]	5.10 [130]	2.91 [74]	1.26 [32]	0.75 [19]	BYNA590MRT15HACCC	L735W	L727W	1.24
		5600-1058D	2												
Milan	1134	5600-1064	1												
		5600-1064D	2												
Rome	1183	5600-1066	1												
		5600-1066D	2												
Cardinal	1222	5600-1070	1									BYNA49RT15HACCC		L727W	1.313
		5600-1070D	2												
Vienna	1255	5600-1072	1												
		5600-1072	2												
Budapest	1332	5600-1074	1												
		5600-1074D	2												
Prague	1377	5600-1076													
		5600-1076D													
Munich	1461	5600-1078	1									BYNA760MRT15HACCC		L728W	1.35
		5600-1078D	2												
London	1512	5600-1079	1									BYNA52RT15HACCC		L728W	1.454
		5600-1079D	2												
Bittern	1572	5600-1080	1												
		5600-1080D	2												
Paris	1620	5600-1082	1												
		5600-1082D	2												

Notes:
ACCC is a Registered Trade Mark of CTC Cable Corp.
1. Deadend Assembly consists of Aluminum Body, Steel Eye and Terminal with mounting hardware.
2. Designed for corona free operation up to 230 kV, contact factory for 345 kV and 500 kV operation.
3. For stainless steel hardware, contact factory.
4. Dimensions in brackets [ ] denotes metric units and are rounded to nearest whole numbers.

* Overlap crimps.

Blue highlighted items are industry standard and most frequently ordered.

Full Tension Splice Kit

Compression Splice for ACCC® Conductor

Full tension two piece splice for ACCC® transmission lines up to and including 230 kV.

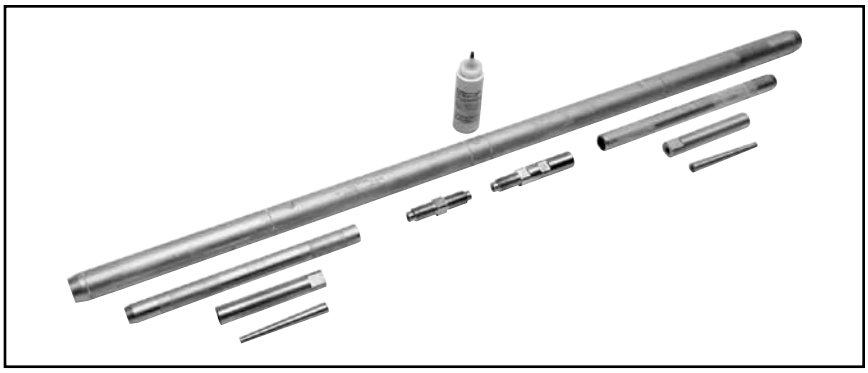

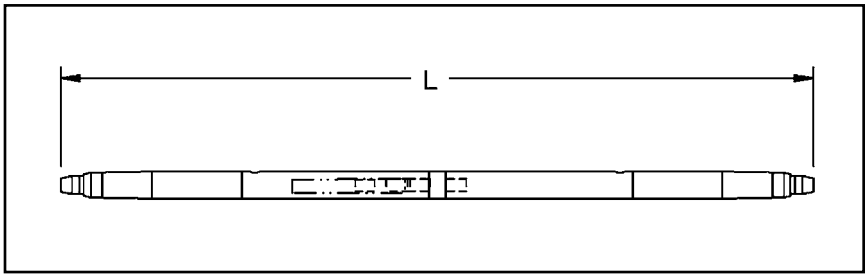

Conductor Name	Size kcmil	Catalog Number	Dimensions (Inches) L	Installation Tool	
				Die*	Tool
Linnet	431	**5600-2020**	60.80 [1544]	L727W	Y60BHU
Copenhagen	440	**5600-2022**			
Glasgow	473	**5600-2044**			
Casablanca	546	**5600-2028**			
Hawk	611	**5600-2030**			
Lisbon	629	**5600-2032**			
Dove	713	**5600-2040**			
Amsterdam	733	**5600-2042**			
Grosbeak	816	**5600-2050**			
Brussels	839	**5600-2052**			
Oslo	627	**5600-2026**	67.00 [1702]	L735W	
Stockholm	913	**5600-2054**			
Warsaw	1016	**5600-2056**			
Drake	1020	**5600-2060**			
Dublin	1043	**5600-2062**			
Hamburg	1092	**5600-2058**			
Milan	1134	**5600-2064**			
Rome	1183	**5600-2066**			
Cardinal	1222	**5600-2070**			
Vienna	1255	**5600-2072**			
Budapest	1332	**5600-2074**			
Prague	1377	**5600-2076**			
Munich	1461	**5600-2078**			
London	1512	**5600-2079**			
Bittern	1572	**5600-2080**			
Paris	1620	**5600-2082**			

1. Designed for corona free operation up to 230 kV, contact factory for 345 kV and 500 kV operation.
2. Dimensions in brackets [ ] denotes metric units and are rounded to nearest whole number.
* Overlap crimps.
ACCC is a Registered Trade Mark of CTC Cable Corp.

TYPES BYNA-RTACCC, BYNA-RT15ACCC

Compression Terminals Straight and 15 Degree for ACCC® Conductor

Compression terminal for ACCC® transmission lines up to and including 230 kV.

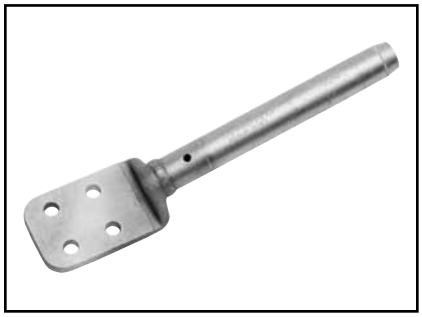

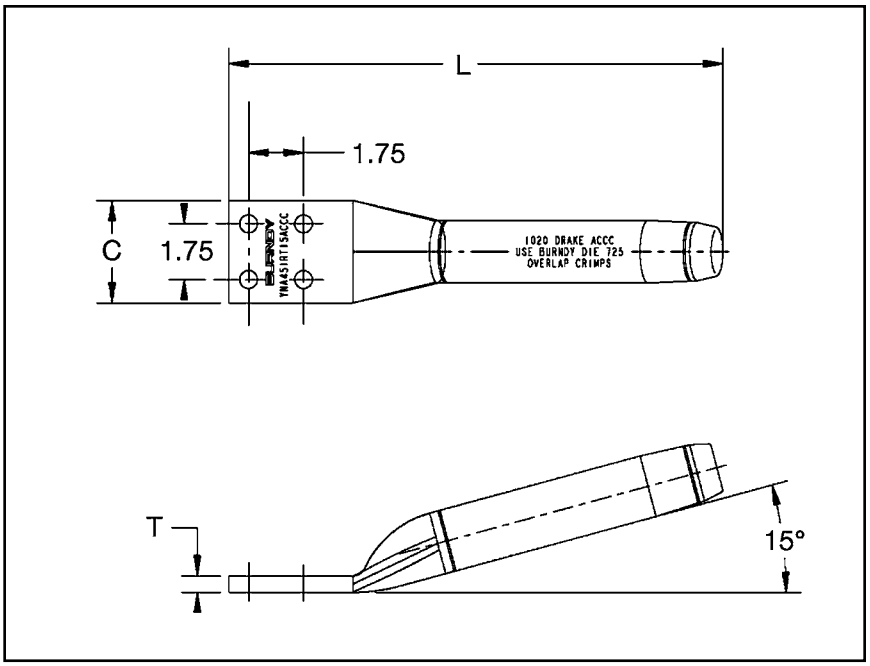

Conductor Name	Size kcmil	Straight Catalog Number	15 Degree Catalog Number	Dimensions (Inches)				Installation Tooling			
				Straight L	15 Degree L	C	T	Die Index	Y45*	Y46*	Y60BHU*
Linnet	431	BYNA32RTACCC	BYNA32RT15ACCC	15.50 [393]	15.50 [393]	3.25 [83]	0.50 [13]	717	S717	P717	L717W
Copenhagen	440										
Glasgow	473	BYNA245MRTACCC	BYNA245MRT15ACCC	15.80 [402]	15.80 [402]			719	S719	P719	L719W
Casablanca	546	BYNA36RTACCC	BYNA36RT15ACCC	15.80 [402]	15.80 [402]			720	S720	P720	L720W
Hawk	611										
Lisbon	629										
Oslo	627	BYNA39RTACCC	BYNA39RT15ACCC	16.20 [411]	16.20 [411]			722	S722	P722	L722W
Dove	713										
Amsterdam	733										
Grosbeak	816	BYNA43RTACCC	BYNA43RT15ACCC	16.20 [411]	16.20 [411]			724	S724	P724	L724W
Brussels	839										
Stockholm	913	BYNA451RTACCC	BYNA451RT15ACCC	15.30 [389]	15.00 [380]	3.22 [82]	0.45 [11]	725	S725	P725	L725W
Warsaw	1016										
Drake	1020										
Dublin	1043										
Hamburg	1092	BYNA590MRTACCC	BYNA590MRT15ACCC	15.60 [397]	15.70 [399]		0.52 [13]	727	—	—	L727W
Milan	1134										
Rome	1183										
Cardinal	1222	BYNA49RTACCC	BYNA49RT15ACCC	15.60 [397]	15.70 [399]		0.52 [13]	727	—	—	L727W
Vienna	1255										
Budapest	1332										
Prague	1377										
Munich	1461	BYNA760MRTACCC	BYNA760MRT15ACCC	17.10 [435]	17.30 [438]		0.71 [18]	728	—	—	L728W
London	1512	BYNA52RTACCC	BYNA52RT15ACCC	17.10 [435]	17.30 [438]		0.71 [18]	728	—	—	L728W
Bittern	1572										
Paris	1620										

Notes:
ACCC is a Registered Trade Mark of CTC Cable Corp.
1. To specifiy mounting hardware to correspondending deadend or pad add H to the part number (example: BYNA451RTHACCC).
2. To specify stainless steel hardware add suffix SS to the catalog number (example: BYNA451RTACCCSS).
3. Designed for corona free operation up to 230 kV, contact factory for 345 kV and 500 kV operation.
4. Dimensions in brackets [ ] denotes metric units and are rounded to nearest whole numbers.
* Overlap crimps.

Blue highlighted items are industry standard and most frequently ordered.

TYPE YNTA-RTACCC

Compression T-Tap for ACCC® Conductor

Two piece compression T-Tap to a NEMA pad for ACCC® transmission lines up to and including 230 kV.

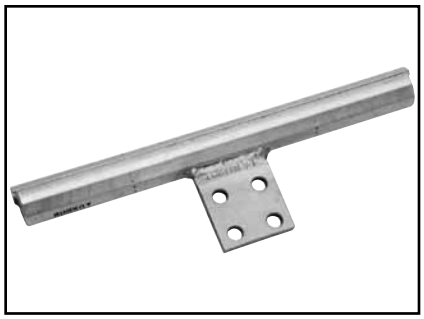

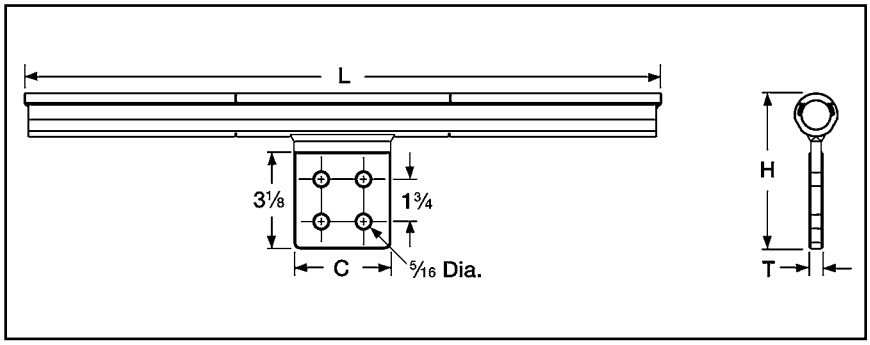

Conductor Name	Size kcmil	Catalog Number	Dimensions (Inches) L	C	H	T	Installation Tooling Die Index	Y45*	Y46*	Y60BHU*
Linnet	431	YNTA32RTACCC	24.92 [633]	4.00 [102]	5.82 [148]	0.56 [14]	717	S717	P717	L717W
Copenhagen	440									
Glasgow	473	YNTA245MRTACCC	25.50 [648]		5.93 [150]		719	S719	P719	L719W
Casablanca	546	YNTA36RTACCC	25.50 [648]		6.03 [153]		720	S720	P720	L720W
Hawk	611									
Lisbon	629									
Oslo	627	YNTA39RTACCC	26.06 [662]		6.13 [156]		722	S722	P722	L722W
Dove	713									
Amsterdam	733									
Grosbeak	816	YNTA43RTACCC	26.28 [667]		6.24 [158]		724	S724	P724	L724W
Brussels	839									
Stockholm	913	YNTA451RTACCC	26.38 [670]		6.43 [163]		725	S725	P725	L725W
Warsaw	1016									
Drake	1020									
Dublin	1043									
Hamburg	1092	YNTA49RTACCC	26.36 [669]		6.60 [168]		727	—	—	L727W
Milan	1134									
Rome	1183									
Cardinal	1222									
Vienna	1255									
Budapest	1332									
Prague	1377									
Munich	1461	YNTA52RTACCC	29.32 [745]		7.00 [178]	0.69 [17]	728	—	—	L728W
London	1512									
Bittern	1572									
Paris	1620									

ACCC is a Registered Trade Mark of CTC Cable Corp.

1. Designed for corona free operation up to 230 kV, contact factory for 345 kV and 500 kV operation.
2. Dimensions in brackets [ ] denotes metric units and are rounded to nearest whole number.

* Overlap crimps.

Blue highlighted items are industry standard and most frequently ordered.

TYPE YNU-RACCC

Compression Repair Sleeve for ACCC® Conductor

Two piece compression repair sleeve for temporary restoration of conductivity to damaged ACCC® transmission lines.

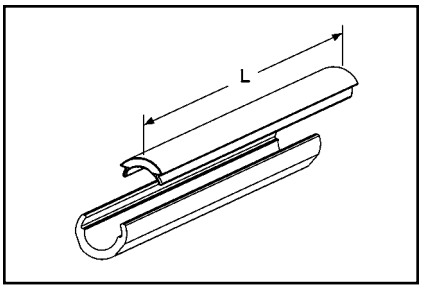

Conductor Name	Size kcmil	Catalog Number	Dimensions (Inches) L	Installation Tooling			
				Die Index	Y45*	Y46*	Y60BHU*
Linnet	431	YNU32RACCC	22.00 [559]	717	S717	P717	L717W
Copenhagen	440						
Glasgow	473	YNU245MRACCC		719	S719	P719	L719W
Casablanca	546	YNU36RACCC		720	S720	P720	L720W
Hawk	611						
Lisbon	629						
Oslo	627	YNU39RACCC	24.00 [610]	722	S722	P722	L722W
Dove	713						
Amsterdam	733						
Grosbeak	816	YNU43RACCC		724	S724	P724	L724W
Brussels	839						
Stockholm	913	YNU451RACCC		725	S725	P725	L725W
Warsaw	1016						
Drake	1020						
Dublin	1043						
Hamburg	1092	YNU49RACCC		727	—	—	L727W
Milan	1134						
Rome	1183						
Cardinal	1222						
Vienna	1255						
Budapest	1332						
Prague	1377						
Munich	1461	YNU52RACCC		728	—	—	L728W
London	1512						
Bittern	1572						
Paris	1620						

ACCC is a Registered Trade Mark of CTC Cable Corp.
Dimensions in brackets [ ] denotes metric units and are rounded to nearest whole number.
* Overlap crimps.

IMPLO®

Connections for all common conductor types including high temperature applications

IMPLO® connectors consist of a small engineered energy charge that is pre-wrapped around a specifically designed metallic sleeve. The charge creates an implosive compression, creating a permanent high quality connection. The split-second detonation creates a flash and an air blast similar to a firework.

Implosive connectors produce a smoother, stronger and more electrically efficient connection. The connectors can also significantly reduce construction time, resulting in fewer environmental impacts and lower project costs.

Installation productivity can be greatly increased as IMPLO® connections require no hydraulic equipment to connect high voltage conductors, which can be a cumbersome, time consuming and expensive process. IMPLO® technology is more versatile, makes a superior connection and is faster and easier to install, yielding significant savings in construction time and cost.

Multiple IMPLO® connectors can be installed simultaneously. This is particularly useful in the deadending of towers, where efficiency gains of up to 60% are easily achievable.

The IMPLO® splice can be pulled through stringing blocks without damaging the conductor and without any splice degradation. This enables faster installation and allows multiple reels to be pulled in a single run. This versatility gives the project manager a great deal of lattitude in selecting locations to situate pulling stations and tensioning equipment. The management of environmental concerns is made easier through this versatility and construction projects can be carried out with less disruption to the environment.

IMPLO® connections need no equipment for installation and may be installed in any terrain and in almost any weather condition. Installation can be done in the air as well as on the ground. Creating a virtually void free connection, IMPLO® connections eliminate the need for oxide inhibitor. Additionally, the resulting smooth connection requires no filing and operates corona free.

Due to the ability to be pulled through stringing blocks and the ability to swiftly create multiple deadend connections, installation time savings up to 60% are achievable versus hydraulic compression. IMPLO® connectors can be safely installed on a live line or in close proximity to other live lines.

Complete compression by the implosion process virtually eliminates oxide growth and mitigates moisture egress into the connection. IMPLO® connections are designed to meet or exceed the RBS of the conductor. The completed joint is uniformly smooth, with no sanding or filling. By providing a fully compressed, uniformly smooth and straight fitting, there is no birdcaging of the conductor. The process does not bow or elongate the connector and compression occurs only in the radial direction. This allows splices to be installed in close proximity to each other or to other line hardware.

IMPLO® has more than 35 years of proven field application around the world. BURNDY has experienced and dedicated field resources for training and project coordination, including a logistics team knowledgeable in the needs of the transmission market. BURNDY has technical resources dedicated to the advancement of industry standards including internal testing and standards qualification capabilities.

IMPLO® connections can accommodate a wide range of ACSR, ACSS, ACSS/TW, ASC, and ASC/TW conductors; providing a consistent, smooth, high quality installation every time with no tools or dies. Various configurations, tap pad angles, and eyebolt versions available; 15 degree tap pad is standard.

IMPLO® Applications

- Deadending, splicing, and terminating high voltage transmission lines
- Working on or in close proximity to live lines
- New construction
- Maintenance of existing lines
- Substations
- Reconductoring/upgrading existing lines
- Joining steel static wire and guy wire

Full Tension Joints (Splice)

The splice consists of an aluminum alloy sleeve with the energy charge pre-wrapped. These joints are designed to be installed at the tensioner and pulled through stringing blocks. Special application charts for each conductor show the relationship between the pulling tension, weight span and the allowable line angle through which the joints may be pulled. This makes sleeving an integral part of overall pulling operation, and greatly simplifies stringing.

Deadends*

Deadends consist of an aluminum alloy sleeve with the energy charge pre-wrapped and an oval or round eyebolt. A 15º NEMA four-hole pad is welded to the main sleeve. The eyebolt is attached to the aluminum alloy sleeve and can be freely turned 360º to the desired position relative to the pad prior to installation.

Jumper Terminal**

Jumper Terminals consist of an aluminum sleeve with the energy charge pre-wrapped and a 15º NEMA pad at one end. Jumper terminals may be installed at 0º or 30º take-off angles when matched to a deadend joint with a 15º NEMA pad.

Repair Sleeve

Repair Sleeves consist of two aluminum alloy half sleeves that slide together. An energy charge pre-wrapped on a flexible plastic sleeve is wrapped around the Repair Sleeve when installed. Repair Sleeves are used to repair minor damage to the outer strands of a conductor, such as damage caused during construction or wear of spacer. Repair Sleeves can also be provided with a NEMA four-hole pad.

Blue highlighted items are industry standard and most frequently ordered.

IMPLO®

Connections for ACSR

Conductor			Full Tension Joint (Splice)	Deadend*	Jumper Terminal**	Repair Sleeve
Conductor Code	Stranding	kcmil				
Linnet	26/7	336.4	1050	2050	3050	9050
Oriole	30/7	336.4				
Chickadee	18/1	397.5				
Brant	24/7	397.5				
Ibis	26/7	397.5	1050/I	2050/I	3050	9050
Lark	30/7	397.5	1051	2051	3051	9051
Hawk	26/7	477				
Dove	26/7	556.5	1052	2052	3051	9052
Hydro One	26/7	585				
Rook	24/7	636	1053	2053	3053	9053
Flamingo	24/7	666.6				
Stilt	24/7	715.5				
Crow	54/7	715.5				
Grossbeak	26/7	636	1054	2054	3054	9054
Gannet	26/7	666.6				
Type 16 Crowsnest	-	636				
Starling	26/7	715.5	1056	2056	3056	9056
Cuckoo	24/7	795				
Condor	54/7	795				
Crane	54/7	874.5				
Drake	26/7	795	1057	2057	3057	9057
Cardinal TW	-	954				
Mallard	30/19	795	1058	2058	3058	9058
Ruddy	45/7	900	1059	2059	3059	9059
Rail	45/7	954				
Canary	54/7	900	1060	2060	3060	9060
Cardinal	54/7	954				
Curlew	54/7	1033.5	1061	2061	3061	9061
Ortolan	45/7	1033.5	1062	2062	3062	9062
Bluejay	54/7	1113				
Finch	54/19	1113	1063	2063	3063	9063
Grackle	54/19	1192.5	1064	2064	3064	9064
Bunting	45/7	1192.5	1065	2065	3065	9065
Bittern	45/7	1272				
Potomac TW	36/7	1272				
Pheasant	54/19	1272	1066	2066	3066	9066
Martin	54/19	1351.5				
Dipper	45/7	1351.5	1067	2067	3067	9067
Bobolink	45/7	1431				
Plover	54/19	1431	1070	2070	3070	9070
Parrot	54/19	1510.5				
Nuthatch	45/7	1510.5	1072	2072	3072	9072
Lapwing	45/7	1590				

* The default numbering includes NEMA pad at 15° and oval eye (example: 2050/C). For round eye remove /C suffix after catalog number.

**Standard includes tap pad at 15°, 4-hole NEMA. Contact factory for specials.

Blue highlighted items are industry standard and most frequently ordered.

IMPLO®

Connections for ACSR (Continued)

Conductor			Full Tension Joint (Splice)	Deadend*	Jumper Terminal**	Repair Sleeve
Conductor Code	**Stranding**	**kcmil**				
Falcon	54/19	1590	**1073**	**2073**	**3073**	**9073**
Chuckar	84/19	1780	**1074**	**2074**	**3074**	**9074**
Bluebird	84/19	2156	**1075**	**2075**	**3075**	**9075**
Kiwi	72/7	2167	**1076**	**2076**	**3076**	**9076**
Nelson	72/7	1843.3	**1077**	**2077**	**3077**	**9077**
Mockingbird	72/7	2034.5				
Hydro One	72/7	1843.2				
Seahawk	68/7	1869	**1079**	**2079**	**3079**	**9079**
Piece River	48/7	623.8	**1080**	**2080**	**3080**	**9080**
Toutle TW	17/7	795				
Thrasher	76/19	2312	**1083**	**2083**	**3083**	**9083**
Skylark	36/1	1272	**1084**	**2084**	**3084**	**9084**
Mica-Mica	24/7-26/7E	666.9-648.2	**1090**	**2090**	**3090**	**9090**
Hornbill	48/7	1590	**1094**	**2094**	**3094**	**9094**
Tern	45/7	795	**1095**	**2095**	**3095**	**9095**
Coot	36/1	795	**1103**	**2103**	**3103**	**9103**
Pelican	18/1	477	**1112**	**2112**	**3112**	**9112**
Osprey	18/1	556.5				
Flicker	24/1	477	**1113**	**2113**	**3113**	**9113**
Hen	30/7	477	**1114**	**2114**	**3114**	**9114**
Heron	30/7	500				
Peacock	24/7	605	**1117**	**2117**	**3117**	**9117**
Duck	54/7	605				
Goose	54/7	636				
Hydro One	54/7	605				
Parakeet TW	18/7	556.5				
Eagle	30/7	556.5	**1118**	**2118**	**3118**	**9118**
Squab	26/7	605	**1120**	**2120**	**3120**	**9120**
Wood Duck	30/7	605	**1121**	**2121**	**3121**	**9121**
Teal	30/19	605				
Scuter	30/7	636				
Egret	30/19	636				
King Bird	18/1	636	**1123**	**2123**	**3123**	**9123**
Swift	36/1	636				
Hydro One	18/1-18/7	583.2				
Rogue TW	17/7	954	**1124**	**2124**	**3124**	**9124**
Red Wing	30/19	715.5	**1131**	**2131**	**3131**	**9131**
Grand Rapids	22/7	685.4	**1133**	**2133**	**3133**	**9133**
Macaw	42/7	795				
Catbird	36/1	954	**1138**	**2138**	**3138**	**9138**
Phoenix	42/7	954	**1139**	**2139**	**3139**	**9139**
Towhee	-	954	**1140**	**2140**	**3140**	**9140**
Snowbird	42/7	1033.5	**1141**	**2141**	**3141**	**9141**

* The default numbering includes NEMA pad at 15° and oval eye (example: 2050/C). For round eye remove /C suffix after catalog number.

**Standard includes tap pad at 15°, 4-hole NEMA. Contact factory for specials.

Blue highlighted items are industry standard and most frequently ordered.

IMPLO®

Connections for ACSR (Continued)

Conductor			Full Tension Joint (Splice)	Deadend*	Jumper Terminal**	Repair Sleeve
Conductor Code	Stranding	kcmil				
4/0	6/1	211.6	**1142**	**2142**	**3142**	**9142**
Penguin	6/1	211.6				
Ostrich	26/7	300	**1143**	**2143**	**3143**	**9143**
Merlin	18/1	336.4				
Patridge	26/7	266.8	**1144**	**2144**	**3144**	**9144**
Owl	6/7	266.8				
Road Runner	76/19	2057	**1146**	**2146**	**3146**	**9146**
Moa	76/7	1590	**1167**	**2167**	**3167**	**9167**
Sansum	72/37	1273.5	**1190**	**2190**	**3190**	**9190**

* The default numbering includes NEMA pad at 15° and oval eye (example: 2050/C). For round eye remove /C suffix after catalog number.

**Standard includes tap pad at 15°, 4-hole NEMA. Contact factory for specials.

IMPLO®

Connections for ACSS
Round Strand

Conductor			Full Tension Joint (Splice)	Deadend*	Jumper Terminal**	Repair Sleeve
Conductor Code	Stranding	kcmil				
Linnet	26/7	336.4	1050/ACSS	2050/ACSS	3050/ACSS	9050/ACSS
Oriole	30/7	336.4				
Ibis	26/7	397.5				
Hawk	26/7	477	1051/ACSS	2051/ACSS	3051/ACSS	9051/ACSS
Dove	26/7	556.5	1052/ACSS	2052/ACSS	3052/ACSS	9052/ACSS
Rook	24/7	636	1053/ACSS	2053/ACSS	3053/ACSS	9053/ACSS
Flamingo	24/7	666.6				
Grosbeak	26/7	636	1054/ACSS	2054/ACSS	3054/ACSS	9054/ACSS
Starling	26/7	715.5	1056/ACSS	2056/ACSS	3056/ACSS	9056/ACSS
Cuckoo	24/7	795				
Condor	54/7	795				
Crane	54/7	874.5				
Drake	26/7	795	1057/ACSS	2057/ACSS	3057/ACSS	9057/ACSS
Rail	45/7	954	1059/ACSS	2059/ACSS	3059/ACSS	9059/ACSS
Cardinal	54/7	954	1060/ACSS	2060/ACSS	3060/ACSS	9060/ACSS
Curlew	54/7	1033.5	1061/ACSS	2061/ACSS	3061/ACSS	9061/ACSS
Ortolan	45/7	1033.5	1062/ACSS	2062/ACSS	3062/ACSS	9062/ACSS
Bluejay	45/7	1113				
Finch	54/19	1113	1063/ACSS	2063/ACSS	3063/ACSS	9063/ACSS
Bunting	45/7	1192.5	1065/ACSS	2065/ACSS	3065/ACSS	9065/ACSS
Bittern	45/7	1272				
Pheasant	54/19	1272	1066/ACSS	2066/ACSS	3066/ACSS	9066/ACSS
Martin	54/19	1351.5				
Dipper	45/7	1351.5	1067/ACSS	2067/ACSS	3067/ACSS	9067/ACSS
Parrot	54/19	1510.5	1070/ACSS	2070/ACSS	3070/ACSS	9070/ACSS
Nuthatch	45/7	1510.5	1072/ACSS	2072/ACSS	3072/ACSS	9072/ACSS
Lapwing	45/7	1590				
Falcon	54/19	1590	1073/ACSS	2073/ACSS	3073/ACSS	9073/ACSS
Chuckar	84/19	1780	1074/ACSS	2074/ACSS	3074/ACSS	9074/ACSS
Bluebird	84/19	2156	1075/ACSS	2075/ACSS	3075/ACSS	9075/ACSS
Kiwi	72/7	2167	1076/ACSS	2076/ACSS	3076/ACSS	9076/ACSS

* The default numbering includes NEMA pad at 15° and oval eye (example: 2050/C). For round eye remove /C suffix after catalog number.

**Standard includes tap pad at 15°, 4-hole NEMA. Contact factory for specials.

IMPLO®

Connections for ACSS/TW

Conductor			Full Tension Joint (Splice)	Deadend*	Jumper Terminal**	Repair Sleeve
Conductor Code	Stranding	kcmil				
Linnet	26/7	336.4	1050/ACSS/TW	2050/ACSS/TW	3050/ACSS/TW	9050/ACSS/TW
Oriole	30/7	336.4				
Ibis	26/7	397.5				
Hawk	26/7	477	1051/ACSS/TW	2051/ACSS/TW	3051/ACSS/TW	9051/ACSS/TW
Dove	26/7	556.5	1052/ACSS/TW	2052/ACSS/TW	3052/ACSS/TW	9052/ACSS/TW
Rook	24/7	636	1053/ACSS/TW	2053/ACSS/TW	3053/ACSS/TW	9053/ACSS/TW
Flamingo	24/7	666.6				
Grosbeak	26/7	636	1054/ACSS/TW	2054/ACSS/TW	3054/ACSS/TW	9054/ACSS/TW
Starling	26/7	715.5	1056/ACSS/TW	2056/ACSS/TW	3056/ACSS/TW	9056/ACSS/TW
Cuckoo	24/7	795				
Condor	54/7	795				
Drake	26/7	795	1057/ACSS/TW	2057/ACSS/TW	3057/ACSS/TW	9057/ACSS/TW
Rail	45/7	954	1059/ACSS/TW	2059/ACSS/TW	3059/ACSS/TW	9059/ACSS/TW
Cardinal	54/7	954	1060/ACSS/TW	2060/ACSS/TW	3060/ACSS/TW	9060/ACSS/TW
Curlew	54/7	1033.5	1061/ACSS/TW	2061/ACSS/TW	3061/ACSS/TW	9061/ACSS/TW
Ortolan	45/7	1033.5	1062/ACSS/TW	2062/ACSS/TW	3062/ACSS/TW	9062/ACSS/TW
Bluejay	45/7	1113				
Finch	54/19	1113	1063/ACSS/TW	2063/ACSS/TW	3063/ACSS/TW	9063/ACSS/TW
Bunting	54/19	1192.5	1065/ACSS/TW	2065/ACSS/TW	3065/ACSS/TW	9065/ACSS/TW
Bittern	45/7	1272				
Pheasant	54/19	1272	1066/ACSS/TW	2066/ACSS/TW	3066/ACSS/TW	9066/ACSS/TW
Martin	54/19	1351.5				
Dipper	45/7	1351.5	1067/ACSS/TW	2067/ACSS/TW	3067/ACSS/TW	9067/ACSS/TW
Parrot	54/19	1510.5	1070/ACSS/TW	2070/ACSS/TW	3070/ACSS/TW	9070/ACSS/TW
Nuthatch	45/7	1510.5	1072/ACSS/TW	2072/ACSS/TW	3072/ACSS/TW	9072/ACSS/TW
Lapwing	45/7	1590				
Falcon	54/19	1590	1073/ACSS/TW	2073/ACSS/TW	3073/ACSS/TW	9073/ACSS/TW
Chuckar	84/19	1780	1074/ACSS/TW	2074/ACSS/TW	3074/ACSS/TW	9074/ACSS/TW
Bluebird	84/19	2156	1075/ACSS/TW	2075/ACSS/TW	3075/ACSS/TW	9075/ACSS/TW
Kiwi	72/7	2167	1076/ACSS/TW	2076/ACSS/TW	3076/ACSS/TW	9076/ACSS/TW

* The default numbering includes NEMA pad at 15° and oval eye (example: 2050/C). For round eye remove /C suffix after catalog number.

**Standard includes tap pad at 15°, 4-hole NEMA. Contact factory for specials.

IMPLO®

Connections for AAC/AAAC/ASC

Conductor			Full Tension Joint (Splice)	Deadend*	Jumper Terminal**	Repair Sleeve
Conductor Code	Stranding	kcmil				
Laurel	19	266.8	1179	2179	3179	9179
Tulip	19	336.4	1174	2174	3174	9174
Daffodil	19	350				
Canna	19	397.5	1149	2149	3149	9149
Cosmos	19	477				
Syringa	37	477				
Sinnia	19	500	1150	2150	3150	9150
Hyacinth	37	500				
Dahlia	19	556.5				
Mistletoe	37	556.5				
Meadowsweet	37	600	1085	2085	3085	9085
Orchid	37	636				
Violet	37	715.5				
Nastartium	61	715.5				
Arbutus TW	17	795				
Baker TW	34	795				
Arbutus	37	795	1157	2157	3157	9157
Lilac	61	795				
Anemone	37	874.5	1158	2158	3158	9158
Crocus	61	874.5				
Magnolia	37	954				
Golden Rod	61	954				
Greeley	37	927.7				
Bluebell	37	1033.5	1086	2086	3086	9086
Larkspur	61	1033.5				
Marigold	61	1113				
Hawthorne	61	1192.5	1093	2093	3093	9093
Narcissus	61	1272				
Columbine	61	1351.5	1165	2165	3165	9165
Hood TW	34	1589				
Sulphur	61	764mm^2	1165-NZ	2165-NZ	3165-NZ	9165-NZ
Carnation	61	1431	1166	2166	3166	9166
Gladiolus	61	1510.5				
Coreopsis	61	1590				
Jasamine	61	1750	1169	2169	3169	9169
Cowslip	91	2000	1170	2170	3170	9170
Sagebrush	91	2250	1171	2171	3171	9171
Hydro One	91	2303				
Lupine	91	2500				
Bitterroot	91	2750				
Jefferson TW	52	2402	1181	2181	3181	9181
TransAlta	91	3000	1182	2182	3182	9182

* The default numbering includes NEMA pad at 15° and oval eye (example: 2050/C). For round eye remove /C suffix after catalog number.

**Standard includes tap pad at 15°, 4-hole NEMA. Contact factory for specials.

Blue highlighted items are industry standard and most frequently ordered.

IMPLO®

Connections for Static (Sky) Wire

Wire Size		Full Tension Joint (Splice)	Deadend*
AW	HDG		
7#10	5/16”	**1990**	**2990**
7#9	11/32”	**1903**	**2903**
7#8	3/8”	**1904**	**2904**
7#7		**1991**	**2991**
	7/16”	**1906**	**2906**
	1/2”	**1997**	**2997**
7#5		**1993**	**2993**
19#9		**1995**	**2995**
19#8	5/8”	**1994**	**2994**
19#7		**1923**	**2923**
19#5	3/4”	**1998**	**2998**
37#8	7/8”	**1978**	**2978**

Rebar 1-1/8”	**1930**
Rebar 1-1/4” to 1-1/8”	**1931**

* The default numbering includes NEMA pad at 15° and oval eye (example: 2050/C). For round eye remove /C suffix after catalog number.

TYPE TDM-RG1

Stockbridge Damper

The Stockbridge Damper is designed to enhance conductor life by lessening potential vibration-induced fatigue.

Features & Benefits

- Clamps designed around common conductor sizes
  - ◊ Ease of specification
- Single bolt design
  - ◊ Ease of installation
  - ◊ Single wrench installation
- Accurate components assembly represents greater energy dissipation
  - ◊ Provides extended life for overhead lines
- Messenger cable and weights have a corrosion resistant finish
  - ◊ Weight design eliminates water entrapment
  - ◊ Smooth surfaces and rounded edges to eliminate possible corona discharge

Standards

The Stockbridge Dampers meet the following standards:

- **IEC 61897** Overhead lines—Requirements and Test for Stockbridge Aeolian Vibration Dampers.
- **IEEE Std 664-1993** IEEE Guide for Laboratory Measurement of the Power Dissipation Characteristics of Aeolian Vibration Dampers for Single Conductors.

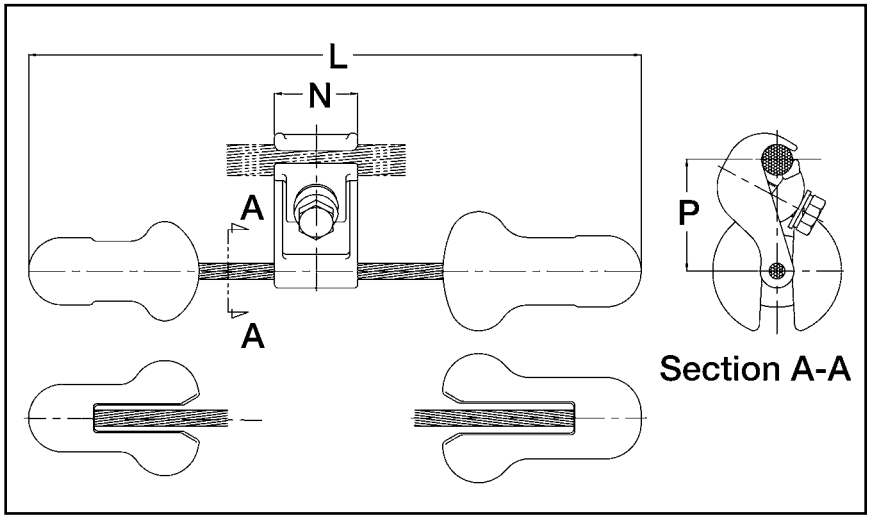

Conductors: ACSR, AAC, ACAR/Static Wires (Galvanized Steel, Alumoweld, Copperweld)							
Catalog Number	Clamp Diameter Range	N	P	L	Wrench Size	Tightening Torque	Weight
TDM99RG1	Ø 0.24" – Ø 0.61" (6 mm – 15.5 mm)	1.70" 43 mm	2.20" 56 mm	12.20" 310 mm	7/16" 11.17 mm	265 in.-lb. 3.0 daN.m	3.7 lb. (1.68 kg)
TDM177RG1	Ø 0.59" – Ø 0.79" (15 mm – 20 mm)	2.00" 51 mm	3.00" 76 mm	14.40" 365 mm	1/2" 12.70 mm	355 in.-lb. 4.0 daN.m	6.2 lb. (2.81 kg)
TDM177RG2	Ø 0.71" – Ø 1.18" (18 mm – 30 mm)	2.00" 51 mm	3.60" 91 mm	14.40" 365 mm	5/8" 16 mm	530 in.-lb. 6.0 daN.m	6.4 lb. (2.9 kg)
TDM210RG1	Ø 0.79" – Ø 1.11" (20 mm – 28.2 mm)	2.40" 60 mm	3.20" 81 mm	19.70" 500 mm	5/8" 16 mm	530 in.-lb. 6.0 daN.m	9.5 lb. (4.30 kg)
TDM210RG2	Ø 1.30" – Ø 1.50" (33 mm – 38.1 mm)	2.40" 60 mm	3.75" 95 mm	19.70" 500 mm	5/8" 16 mm	530 in.-lb. 6.0 daN.m	9.9 lb. (4.50 kg)
TDM246RG1	Ø 0.71" – Ø 1.18" (18 mm – 30 mm)	2.70" 68 mm	3.60" 91 mm	21.00" 534 mm	5/8" 16 mm	530 in.-lb. 6.0 daN.m	13.2 lb. (5.99 kg)
TDM330RG1	Ø 1.18" – Ø 1.26" (30 mm – 32 mm)	2.70" 68 mm	3.60" 91 mm	21.00" 535 mm	5/8" 16 mm	530 in.-lb. 6.0 daN.m	13.2 lb. (5.99 kg)
TDM393RG1	Ø 1.26" – Ø 1.54" (32 mm – 39 mm)	2.70" 68 mm	3.75" 95 mm	21.00" 534 mm	5/8" 16 mm	530 in.-lb. 6.0 daN.m	13.5 lb. (6.12 kg)
TDM430RG1	Ø 1.54" – Ø 1.85" (39 mm – 47 mm)	2.70" 68 mm	4.09" 104 mm	21.00" 534 mm	5/8" 16 mm	530 in.-lb. 6.0 daN.m	14.0 lb. (6.35 kg)

For installation point contact factory at numbers below.

Blue highlighted items are industry standard and most frequently ordered.

TYPE S-D-R-SG

Spacer Damper

Since the 1960's BURNDY Spacer Dampers have been used on bundled conductor transmission lines around the world. Over 850,000 units have been installed on over 40,000 phase miles of conductor. Projects have included 2, 3, 4 and 6 bundle arrangements at voltage levels from 230 kV to 800 kV AC and up to +/-600 kV DC.

BURNDY motion control products are engineered per customer requirements and industry standards. Our engineering team has the experience and technology to provide the proper motion control answers to your bundled conductor transmission line projects.

Our history of design, testing and field installation experience enables us to provide Spacer Damper products along with placement recommendations for optimum performance.

In most cases Spacer Dampers are custom designed for the specific transmission line requirements. Contact the factory for more information.

For installation points per span contact factory.

Conductor placement installation points are calculated with the recently developed proprietary BURNDY software.

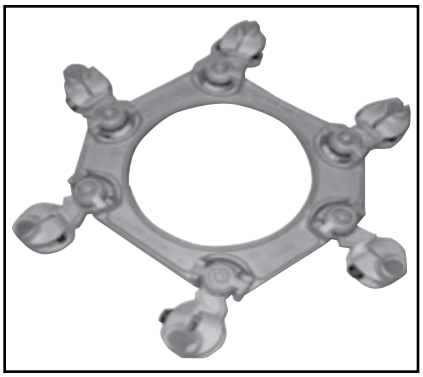

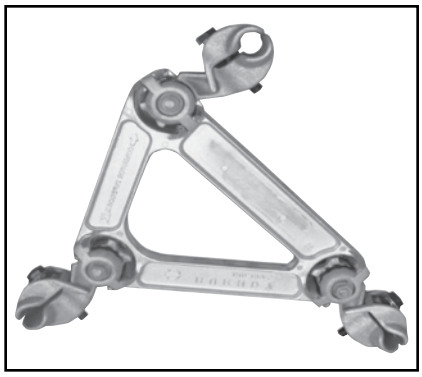

Conductors: ACSR, AAC, ACAR						
Catalog Number	**Bundle Size**	**Conductor kcmil**	**Conductor Diameter**	**Spacing**	**Wrench Size**	**Tightening Torque**
S2D451R-SG1	2	795	1.107" 28.1 mm	18" 457 mm	5/8" 16 mm	55 ft.-lb. 74.6 daN.m
S3D451R-SG1	3	795	1.107" 28.1 mm	18" 457 mm	5/8" 16 mm	55 ft.-lb. 74.6 daN.m
S3D55R-SG1	3	1590	1.54" 39 mm	18" 457 mm	5/8" 16 mm	55 ft.-lb. 74.6 daN.m
S4D48R-SG1	4	954	1.196" 30.4 mm	18" 457 mm	5/8" 16 mm	55 ft.-lb. 74.6 daN.m
S6D441R-SG1	6	957	1.06" 26.9 mm	30" Dia. 762 mm	5/8" 16 mm	55 ft.-lb. 74.6 daN.m

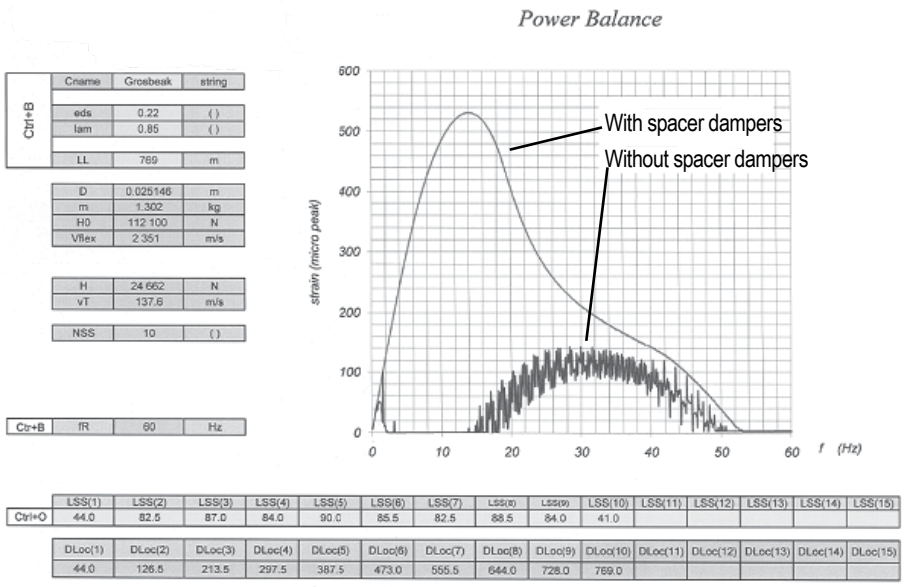

Blue highlighted items are industry standard and most frequently ordered.

TYPE S2GBP-ASG

Rigid Spacers

Since the 1960s, BURNDY has been providing motion control products for transmission lines. This rigid spacer line addresses the needs for many new transmission lines being designed with twin bundle conductor per phase. BURNDY® rigid spacers are engineered to perform to customer and industry standards and carry with them the design, testing and field installation experience to provide the right solution for each transmission lines. Placement recommendations are provided for optimum performance on each project.

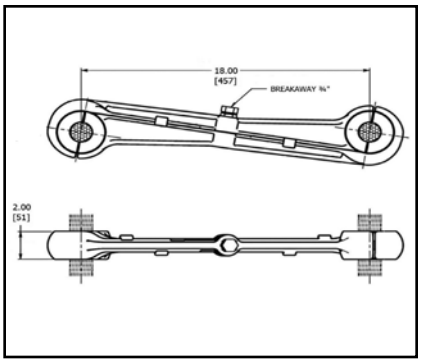

Catalog Number	Conductor Min. Diameter	Conductor Max. Diameter	Liner Material
S2GBP451ASG4	1.08 in	1.11 in	EPDM
S2GBP451ASG1HT	1.08 in	1.11 in	SILICONE
S2GBP47ASG1	1.15 in	1.19 in	EPDM
S2GBP47ASG2HT	1.15 in	1.19 in	SILICONE
S2GBP48ASG2	1.19 in	1.23 in	EPDM
S2GBP48ASG1HT	1.19 in	1.23 in	SILICONE
S2GBP52ASG1	1.27 in	1.31 in	EPDM
S2GBP52ASG2HT	1.27 in	1.31 in	SILICONE
S2GBP51ASG1	1.32 in	1.36 in	EPDM
S2GBP51ASG2HT	1.32 in	1.36 in	SILICONE
S2GBP463ASG6	1.50 in	1.55 in	EPDM
S2GBP463ASG1HT	1.50 in	1.55 in	SILICONE

Material:

Clamp Frame : Aluminum Alloy
Shearhead Bolt : Aluminum Alloy; ASTM B210 Black Anodized
Clamp Liner : See Table

Silicone liner rated to 250° C maximum Designed for corona free operation to 500 KVAC.

Recommended tightening torque to shear off the breakaway bolt head: 63 lb-ft

THE WEJTAP™ SYSTEM

FOR ELECTRIC UTILITY DISTRIBUTION AND TRANSMISSION CONNECTIONS

Blue highlighted items are industry standard and most frequently ordered.

TABLE OF CONTENTS

WEJTAP™ Connection System	J-3
WEJTAP™ and Test Data	J-4
WEJTAP™ Ordering Information	J-5
WEJTAP™ Cover	J-5
WEJTAP™ Connector Selection Chart (by Diameter)	J-6 - J-8
★NEW★ WEJTAP™ Copper WEJTAP™	J-9, J-10
WEJTAP™ STIRRUP™ and Power Boosters	J-11
WEJTAP™ STIRRUP™ Selection Chart	J-11
WEJTAP™ Installation Tools	J-12
Installation Tool Accessories	J-12
WEJTAP™ POWERLUG™	J-13
WEJTAP™ Hotstick Accessories	J-14
WEJTAP™ Kit Ordering Instructions	J-15
WEJTAP™ In-Line Disconnect	J-16

WEJTAP™ Booster Function Video
:55 Seconds

Closing the Breech Video
:22 Seconds

Removal of Booster Video
:27 Seconds

Connector Installation Video
2 min. 19 Seconds

Connector Removal Video
1 min. 57 Seconds

Slow Motion Installation Video
:18 Seconds

WEJTAP™ Tool Cleaning Video
2 min. 50 Sec.

Tightening of Tool Video
:26 Seconds

Blue highlighted items are industry standard and most frequently ordered.

BURNDY WEJTAP™

CONNECTION SYSTEM

BURNDY®, a leading manufacturer of quality electrical connectors for over 70 years, introduces the WEJTAP™ SYSTEM, a system that adds further dimension to the existing BURNDY® group of proven, reliable connection systems.

WEJTAP™ COMPONENTS are designed to provide a reliable system connection. The system consists of WEJTAP™ connectors, installation tools (including a variety of hotline and lineman accessories) and a unique power-booster.

WEJTAP™ CONNECTORS use an aluminum alloy wedge that is power-driven between the run and the tap cables locking them into a "C" shaped tempered aluminum alloy spring-body. The spring-body maintains consistent pressure throughout the life of the connection to ensure reliability during severe electrical and climatic conditions. The wedge's wiping action combined with factory installed PENTX 1530 provides superior contact integrity. The wedge is automatically locked onto the spring-body by a skiving action produced by a lance at the forward end of the WEJTAP™ installation tool.

The **WEJTAP™ TOOL** is a one-piece assembly that consists of a head and power unit. Two color-coded interchangeable heads accept all WEJTAP™ connectors and STIRRUP™. The design of the tool recognizes the need for simplicity and speed of operation as well as outstanding safety features such as automatic gas release vented away from the operator, fast simple breech loading and fast advance when engaging the connector assembly. No loose parts to drop or misplace and a booster ejection system that provides further safety to the operator. Fewer simplified hotline devices and handy lineman accessories complete an outstanding tool package.

The **WEJTAP™ POWER-BOOSTER** Patented is a self-contained device that provides the force necessary to drive the wedge into direct contact with the conductors. The booster is activated only when properly positioned in the tool assembly. A power cell in the booster is recessed to guard against premature discharge. The tool/booster system is designed to activate and deactivate the booster automatically should the operator decide to remove the tool from a connector prior to completing the installation. The deactivated booster may be safely removed from the tool.

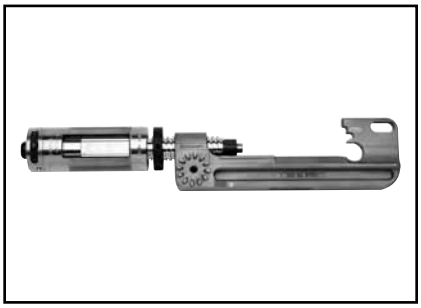

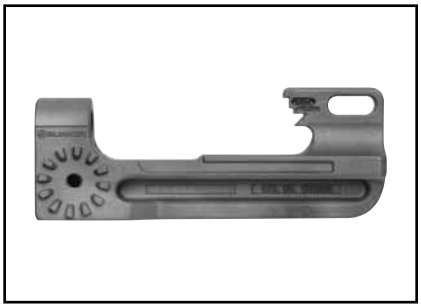

Features and Benefits

- Large conductor chamfer on ends of wedge
  - ◊ Instant hand or visual identification of large run grooves. Ensures correct wedge orientation.
- Color-coded WEJTAP™ connector and booster packaged together
  - ◊ Easy selection by installer.
- Factory coated grooves with PENTX 1530
  - ◊ Maintains low contact resistance, assists in protection against climatic conditions and is compatible with common insulations.
- One-piece tool
  - ◊ No project delays due to dropped or lost parts.
- Fewer and improved hotstick accessories
  - ◊ Simplifies hotline installation and saves time.
- Contained booster ejection system
  - ◊ Safe for operator guards against the booster being ejected in direction of the installer.
- Automatic gas release vented away from operator
  - ◊ Eliminates manual gas venting and improves safety.
- Simplified loading
  - ◊ Speeds installation — no threads — just depress safety bar, twist and pull open — load — push and twist to close prior to applying connector.
- Acme-type threads
  - ◊ Provides smooth, fast engagement of tool and connector — saves installer's time.

WEJTAP™ AND TEST DATA

WEJTAP™ connectors have been subjected to extensive tests simulating the most severe service and weather conditions. In addition. the WEJTAP™ system meets or exceeds the industry standards of ANSI C119.4 Class 3, NEMA CC3 1973 Class AA, 500 Heat Cycles.

As with all BURNDY® connectors, the WEJTAP™ has been designed to operate cooler than the attached conductors. The WEJTAP™ connectors have also been subjected to the ASTM B117-73 Salt Spray Test. The results are shown to the right.

ANSI C119.4 - 1986 Heat Cycle Test
Average Temperature Rise vs. Current Cycles

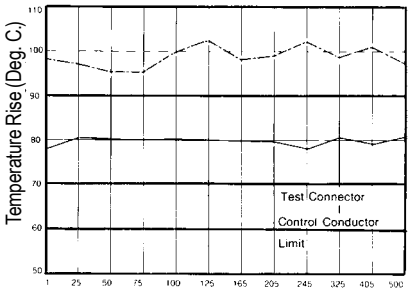

Detailed test report packages are available upon request.

ASTM Salt Spray Test
Average % Relative Resistance vs. Hours of Salt Spray Exposure

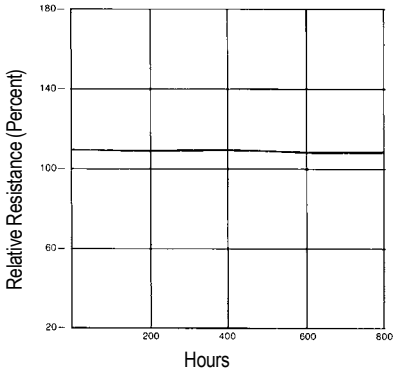

WEJTAP™

C-member bodies are color-coded and the wedges are marked with nominal conductor run and tap ranges. WEJTAP™ connector packages are labeled with a variety of common conductors with their nominal ranges.

- WEJTAP™ connector wedges are marked with nominal ACSR, Aluminum and Copper concentric standard conductors.
- Red WEJTAP™ connector range Run 8-1/0 Tap 8-2
- Blue WEJTAP™ connector range Run 2-300 Tap 6-300
- Yellow WEJTAP™ connector range Run 266.8-1590 Tap 6-1590

All WEJTAP™ wedges contain a clearly defined chamfer on the large end of the run conductor groove to identify the "large run" groove. Installers will appreciate the convenience of visual or hand identification for correct wedge positioning.

WEJTAP™ wedges are driven between the run and tap conductors and activate the spring characteristics of the "C" shaped body. This action maintains contact pressure even when the connection is subjected to severe climatic and electrical conditions.

RUS Accepted

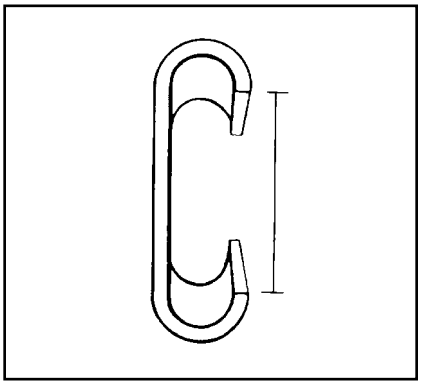

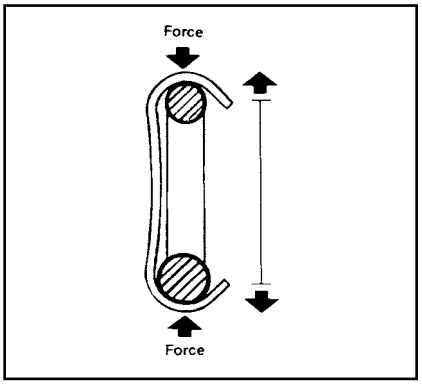

The BURNDY® WEJTAP™ System has a wide variety of connectors available for many different conductor ranges.

Color coded boosters and connectors ensure proper matching during installation.

The BURNDY® Power Booster is designed and engineered for the highest reliability and safety. Proven rimfire design means misfires are almost nonexistent. Close manufacturing component tolerances provide maximum resistance to moisture or submersion.

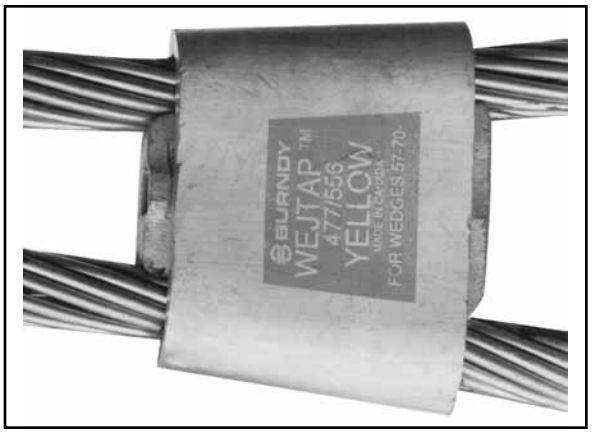

ORDERING INFORMATION

- Power boosters may be ordered separately in boxes of 25.

Red boosters	**Cat. # WPBRN Box 25**
Blue boosters	**Cat. # WPBBN Box 25**
Yellow boosters	**Cat. # WPBYN Box 25**

Select appropriate connector; match with equal number of color coded boosters (see below).

WPB—Red, Blue, Yellow Boosters

For information about conductors which are not listed, and for further ordering information, please contact BURNDY® at 1-800-346-4175.

WEJTAP™ COVER

WEJTAP™ Covers are installed on WEJTAP™ connectors to prevent them from coming in contact with other taps or exposed ground points. The covers are rugged snap-on devices available in four sizes to cover all connector sizes.

Cover Catalog Number	WEJTAP™ Size	Nominal Conductor Range Run	Nominal Conductor Range Tap	Cover Color
WCCR	Small Old Style Red	8-1/0	8-2	Black Weather Rated
WCCB	Red & Blue	2-300	6-300	
WCCSY	Small (Yellow)	300-556.50	6-556.50	
WCCLY	Large (Yellow)	556.50-1033.50	556.5-1033.50	

Blue highlighted items are industry standard and most frequently ordered.

BURNDY WEJTAP™ SELECTION CHART

By Diameter

Catalog Number	Sum of Diameters		Run		Tap	
	Max	Min	Max	Min	Max	Min
Installed with red booster						
WCR29	0.723	0.584	0.398	0.257	0.398	0.257
WCR30	0.649	0.516	0.398	0.257	0.325	0.206
WCR31	0.602	0.464	0.398	0.257	0.258	0.162
WCR32	0.530	0.410	0.326	0.204	0.258	0.162
WCR33	0.459	0.331	0.258	0.169	0.230	0.162
WCR34	0.324	0.256	0.162	0.128	0.162	0.128
WCR35	0.560	0.452	0.398	0.257	0.162	0.128
WCR36	0.487	0.387	0.398	0.257	0.162	0.128
WCR37	0.416	0.297	0.258	0.169	0.162	0.128
Installed with blue booster						
WCB10	0.795	0.621	0.482	0.316	0.437	0.257
WCB11	0.901	0.763	0.568	0.364	0.457	0.257
WCB12	0.707	0.526	0.568	0.364	0.204	0.162
WCB13	0.761	0.600	0.568	0.364	0.258	0.204
WCB14	0.839	0.690	0.568	0.364	0.398	0.257
WCB15	0.769	0.622	0.568	0.364	0.204	0.162
WCB16	0.823	0.664	0.568	0.364	0.258	0.204
WCB17	0.963	0.804	0.568	0.364	0.464	0.257
WCB18	1.011	0.867	0.568	0.364	0.572	0.364
WCB19	1.068	0.938	0.568	0.364	0.572	0.379
WCB20	1.130	0.975	0.568	0.364	0.572	0.386
WCB21	0.846	0.711	0.650	0.532	0.204	0.162
WCB22	0.900	0.765	0.650	0.532	0.258	0.204
WCB23	0.972	0.818	0.650	0.532	0.330	0.257
WCB24	1.052	0.897	0.650	0.532	0.500	0.324
WCB25	1.104	0.963	0.650	0.532	0.562	0.364
WCB26	1.163	1.015	0.650	0.532	0.562	0.409
WCB27	1.221	1.080	0.650	0.532	0.575	0.460
WCB28	1.284	1.141	0.650	0.532	0.650	0.525
WCB40	0.888	0.762	0.684	0.603	0.204	0.162
WCB41	0.942	0.794	0.684	0.600	0.258	0.204
WCB42	1.011	0.857	0.684	0.600	0.333	0.257
WCB43	1.094	0.936	0.684	0.600	0.500	0.324
WCB44	1.146	1.009	0.684	0.600	0.562	0.364
WCB45	1.204	1.057	0.684	0.600	0.562	0.409
WCB46	1.284	1.119	0.684	0.600	0.592	0.460
WCB47	1.368	1.188	0.684	0.600	0.684	0.600
Installed with yellow booster						
WCY48	0.932	0.765	0.750	0.537	0.204	0.162
WCY49	1.012	0.807	0.750	0.537	0.271	0.203
WCY50	1.069	0.860	0.750	0.537	0.355	0.257
WCY51	1.141	0.927	0.750	0.537	0.557	0.324

Blue highlighted items are industry standard and most frequently ordered.

BURNDY WEJTAP™ SELECTION CHART

By Diameter

Catalog Number	Sum of Diameters		Run		Tap	
	Max	Min	Max	Min	Max	Min
Installed with yellow booster						
WCY52	1.190	1.001	0.750	0.537	0.588	0.364
WCY53	1.236	1.012	0.750	0.537	0.619	0.409
WCY54	1.302	1.063	0.750	0.537	0.630	0.46
WCY55	1.370	1.140	0.750	0.537	0.714	0.499
WCY56	1.456	1.245	0.750	0.537	0.750	0.524
WCY57	1.190	0.979	0.893	0.666	0.326	0.257
WCY58	1.087	0.931	0.893	0.666	0.258	0.198
WCY59	1.061	0.891	0.893	0.666	0.199	0.162
WCY60	1.854	1.686	0.950	0.722	0.950	0.722
WCY61	1.741	1.524	0.940	0.683	0.940	0.666
WCY62	1.594	1.379	0.940	0.683	0.750	0.573
WCY63	1.500	1.297	0.940	0.683	0.750	0.481
WCY64	1.421	1.216	0.940	0.683	0.650	0.436
WCY65	1.360	1.147	0.940	0.683	0.562	0.382
WCY66	1.305	1.097	0.940	0.683	0.562	0.336
WCY67	1.270	1.054	0.940	0.683	0.450	0.315
WCY68	1.253	1.115	0.940	0.683	0.326	0.257
WCY69	1.187	1.059	0.940	0.683	0.262	0.204
WCY70	1.130	1.013	0.940	0.683	0.204	0.162
WCY71	2.216	2.074	1.133	0.907	1.156	0.947
WCY72	2.133	1.999	1.133	0.907	1.142	0.927
WCY73	2.098	1.946	1.133	0.907	1.142	0.907
WCY74	2.035	1.891	1.133	0.907	1.142	0.858
WCY75	1.969	1.822	1.133	0.889	0.927	0.763
WCY76	1.901	1.741	1.133	0.889	0.900	0.700
WCY77	1.829	1.677	1.133	0.889	0.750	0.575
WCY78	1.750	1.599	1.133	0.889	0.729	0.525
WCY79	1.670	1.526	1.133	0.889	0.722	0.364
WCY80	1.610	1.466	1.133	0.889	0.608	0.364
WCY81	1.555	1.411	1.133	0.889	0.608	0.364
WCY82	1.506	1.362	1.133	0.889	0.436	0.324
WCY83	1.440	1.288	1.133	0.889	0.398	0.257
WCY84	1.369	1.221	1.133	0.889	0.333	0.203
WCY85	1.306	1.158	1.133	0.889	0.258	0.162
WCY86	2.496	2.332	1.250	0.893	1.250	1.000
WCY87	2.418	2.251	1.250	0.893	1.250	0.856
WCY88	2.354	2.194	1.250	0.893	1.211	0.971
WCY89	2.297	2.137	1.250	0.893	1.200	0.923
WCY90	2.238	2.083	1.250	0.893	1.159	0.868
WCY91	2.173	2.013	1.250	0.893	1.130	0.856
WCY92	2.104	1.950	1.250	0.893	0.904	0.720
WCY93	2.029	1.869	1.250	0.893	0.900	0.700
WCY94	1.967	1.831	1.250	0.893	0.750	0.588
WCY95	1.888	1.728	1.250	0.893	0.722	0.525
WCY96	1.811	1.648	1.250	0.893	0.609	0.364
WCY97	1.748	1.591	1.250	0.893	0.598	0.385
WCY98	1.695	1.533	1.250	0.893	0.598	0.364
WCY99	1.644	1.489	1.250	0.893	0.398	0.324

Blue highlighted items are industry standard and most frequently ordered.

BURNDY WEJTAP™ SELECTION CHART

By Diameter

Catalog Number	Sum of Diameters		Run		Tap	
	Max	Min	Max	Min	Max	Min
Installed with yellow booster						
WCY100	1.572	1.400	1.250	0.893	0.351	0.257
WCY101	1.503	1.343	1.250	0.893	0.261	0.204
WCY102	1.454	1.284	1.250	0.893	0.198	0.162
WCY103	2.604	2.484	1.302	1.242	1.302	1.242
WCY104	2.567	2.407	1.302	1.242	1.265	1.165
WCY105	2.489	2.329	1.302	1.242	1.187	1.087
WCY106	2.418	2.258	1.302	1.242	1.116	1.016
WCY107	2.373	2.213	1.302	1.242	1.071	0.971
WCY108	2.318	2.158	1.302	1.242	1.016	0.916
WCY109	2.255	2.095	1.302	1.242	0.953	0.853
WCY110	2.179	2.019	1.302	1.242	0.877	0.777
WCY111	2.102	1.942	1.302	1.242	0.800	0.700
WCY112	2.044	1.884	1.302	1.242	0.742	0.642
WCY113	1.961	1.801	1.302	1.242	0.659	0.559
WCY114	1.940	1.740	1.350	1.242	0.590	0.498
WCY115	1.863	1.663	1.350	1.242	0.513	0.421
WCY116	1.812	1.612	1.350	1.242	0.462	0.370
WCY117	1.762	1.562	1.350	1.242	0.412	0.320
WCY118	1.703	1.503	1.350	1.242	0.353	0.261
WCY119	1.631	1.431	1.350	1.242	0.281	0.189
WCY120	1.580	1.380	1.350	1.242	0.230	0.138
WCY121	2.844	2.642	1.422	1.314	1.422	1.328
WCY122	2.764	2.562	1.422	1.314	1.342	1.248
WCY123	2.680	2.479	1.422	1.314	1.258	1.164
WCY124	2.596	2.394	1.422	1.314	1.174	1.080
WCY125	2.535	2.333	1.422	1.314	1.113	1.019
WCY126	2.481	2.279	1.422	1.314	1.059	0.965
WCY127	2.426	2.224	1.422	1.314	1.004	0.910
WCY128	2.376	2.174	1.422	1.314	0.954	0.860
WCY129	2.286	2.084	1.422	1.314	0.864	0.770
WCY130	2.216	2.014	1.422	1.314	0.794	0.700
WCY131	2.152	1.950	1.422	1.314	0.730	0.636
WCY132	2.070	1.868	1.422	1.314	0.648	0.554
WCY133	1.990	1.786	1.422	1.314	0.568	0.472
WCY134	1.931	1.729	1.422	1.314	0.509	0.415
WCY135	1.876	1.674	1.422	1.314	0.454	0.360
WCY136	1.831	1.629	1.422	1.314	0.409	0.315
WCY137	1.771	1.569	1.422	1.314	0.349	0.255
WCY138	1.706	1.504	1.422	1.314	0.284	0.190
WCY139	1.664	1.462	1.422	1.314	0.242	0.148
WCY140	3.045	2.090	1.533	1.471	1.547	1.471
WCY145	2.596	2.534	1.533	1.032	1.094	1.032

Blue highlighted items are industry standard and most frequently ordered.

WEJTAP™
COPPER WEJTAP™

CONNECTION SYSTEM

The BURNDY® Copper WEJTAP™ powder actuated copper connectors are designed for overhead copper to copper tap applications.

Features include:

- Newly expanded range taking capabilities
- New larger size connector for #6 - #2 applications
- Uses standard BURNDY® WEJTAP™ tooling without the need for installation platforms
- Meets latest ANSI C119.4 (2011) including optional fault current test annex
- Prefilled with PENETROX™ E to improve the performance over the life of the connection

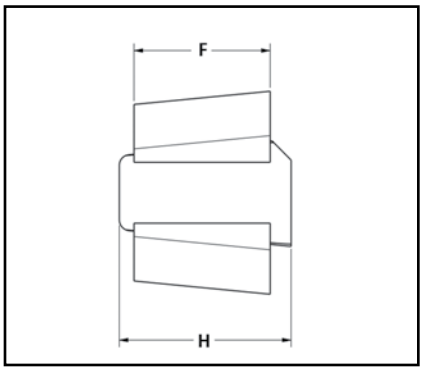

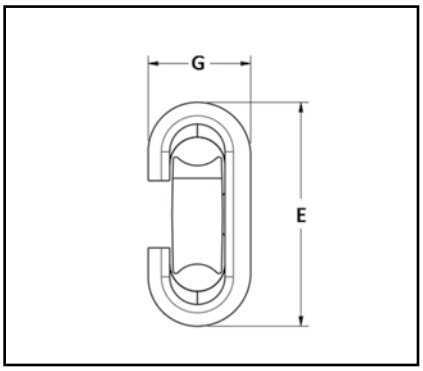

Catalog Number	Copper Conductor Dia. Accommodated (in)			Dimensions				Tooling	Installation Booster Color	Fault Current Rating (KA)
	Run Range	Tap Range	Sum Range	E	F	G	H			
WCB4C4	0.162 - 0.258	0.162 - 0.232	0.324 - 0.464	2.40	1.63	1.02	2.05	WTHRB-1S	Blue	12.50
WCB2C2	0.258 - 0.368	0.162 - 0.292	0.452 - 0.600							
WCB10C2	0.292 - 0.376	0.162 - 0.292	0.524 - 0.665							
WCB20C2	0.300 - 0.430	0.162 - 0.292	0.576 - 0.734							
WCB20C20		0.300 - 0.414	0.710 - 0.844							25.00
WCB30C2	0.360 - 0.516	0.162 - 0.292	0.622 - 0.775							12.50
WCB40C2	0.375 - 0.538	0.162 - 0.292	0.680 - 0.822							
WCB40C20		0.330 - 0.464	0.814 - 0.952							25.00
WCB40C40		0.375 - 0.538	0.936 - 1.072							
WCB250C2	0.435 - 0.574	0.162 - 0.292	0.730 - 0.875							12.50
WCB250C20		0.293 - 0.430	0.875 - 1.033							25.00
WCB250C250		0.431 - 0.574	1.033 - 1.150							38.00

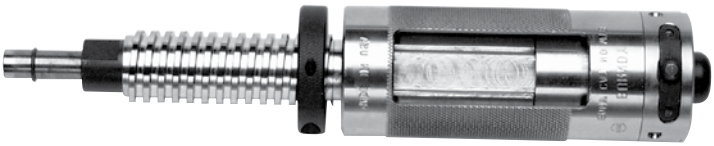

Blue highlighted items are industry standard and most frequently ordered.

BURNDY Catalog Number: WCB4C4

RUN	TAP
#6 CU SOL	#6 CU SOL
#6 CU STR	#6 CU SOL - #6 CU STR
#4 CU SOL	#6 CU SOL - #4 CU SOL
#4 CU STR	#4 CU STR - #6 CU SOL
#2 CU SOL	#6 CU SOL - #6 CU STR

BURNDY Catalog Number: WCB2C2

RUN	TAP
#2 CU SOL	#4 CU SOL - #2 CU SOL
#2 CU STR	#6 CU SOL - #2 CU STR
1/0 CU STR	#6 CU SOL - #4 CU STR

BURNDY Catalog Number: WCB10C2

RUN	TAP
#2 CU STR	#4 CCS* - #2 CU STR
1/0 CU SOL	#6 CU SOL - #2 CU STR
1/0 CU STR	#6 CU SOL - #2 CU STR

BURNDY Catalog Number: WCB20C2

RUN	TAP
1/0 CU STR	#2 CU SOL - #2 CU STR
2/0 CU STR	#6 CU SOL - #2 CU STR

BURNDY Catalog Number: WCB20C20

RUN	TAP
1/0 CU STR	1/0 CU STR
2/0 CU STR	1/0 CU STR - 2/0 CU STR

BURNDY Catalog Number: WCB30C2

RUN	TAP
4/0 CU SOL	#6 CU SOL - #2 CU STR

BURNDY Catalog Number: WCB40C2

RUN	TAP
4/0 CU STR	#6 CU SOL - #2 CU STR

BURNDY Catalog Number: WCB40C20

RUN	TAP
3/0 CU STR	1/0 CU STR - 3/0 CU STR
4/0 CU STR	1/0 CU STR - 2/0 CU STR

BURNDY Catalog Number: WCB40C40

RUN	TAP
4/0 CU STR	4/0 CU SOL - 4/0 CU STR

BURNDY Catalog Number: WCB250C2

RUN	TAP
250 CU STR	#6 CU SOL - #2 CU STR

BURNDY Catalog Number: WCB250C20

RUN	TAP
250 CU STR	1/0 CU STR - 2/0 CU STR

BURNDY Catalog Number: WCB250C250

RUN	TAP
250 CU STR	4/0 CU SOL - 250 CU STR

* Copper Clad Steel

Blue highlighted items are industry standard and most frequently ordered.

WEJTAP™ STIRRUP™ AND POWER BOOSTERS

(Large) Run Conductor position is identified on all wedges via a distinct chamfer.

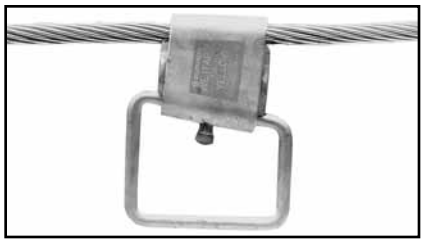

QIK Selector - for common ACSR, Aluminum and Copper Conductors

Catalog Number	Nominal Cable Range	Bail Size
Small Red Cable Range 6-2		
WSS1 WSS2	6 5, 4, 2	2
Medium Blue Cable Range 1-300		
* WSM1	2, 1, 1/0, 2/0	2
WSM2	2/0, 3/0	2
WSM3 WSM4	3/0 - 4/0	2 2/0
WSM5 WSM6	266.8	2 1/0
WSM7	350	1/0
WSM11	266.8 - 336.4	4/0

* WSM1 now accepts #2 conductor

Catalog Number	Nominal Cable Range	Bail Size
Large Yellow Cable Range 300-1033.5		
WSL1 WSL2 WSL3	336.4	1/0 2/0 4/0
WSL4 WSL5 WSL6	397.5 - 477	1/0 2/0 4/0
WSL7 WSL8 WSL9	556.5	1/0 2/0 4/0
WSL10 WSL11	636	4/0 2/0
WSL12 WSL13	795	2/0 4/0
WSL14	1033.5	4/0

BURNDY WEJTAP™ STIRRUP™ SELECTION CHART

By Diameter

Catalog Number	Sum of Diameters		Run		Tap	
	Max.	Min.	Max.	Min.	Max.	Min.
Small stirrups						
WSS1	0.454	0.412	0.204	0.162	0.250	0.250
WSS2	0.575	0.456	0.325	0.206	0.250	0.250
Medium sized stirrups						
WSM1	0.697	0.575	0.447	0.325	0.250	0.250
WSM10	0.887	0.784	0.563	0.460	0.324	0.324
WSM2	0.752	0.615	0.502	0.365	0.250	0.250
WSM3	0.813	0.660	0.563	0.410	0.250	0.250
WSM4	0.938	0.835	0.563	0.460	0.375	0.375
WSM5	0.892	0.787	0.642	0.537	0.250	0.250
WSM6	0.968	0.861	0.642	0.537	0.324	0.324
WSM7	1.008	0.898	0.684	0.574	0.324	0.324
WSM8	0.934	0.824	0.684	0.574	0.250	0.250
WSM9	0.771	0.649	0.447	0.325	0.324	0.324
Large stirrups						
WSL1	1.050	0.927	0.726	0.603	0.324	0.324
WSL10	1.479	1.389	1.019	0.929	0.460	0.460
WSL11	1.394	1.304	1.019	0.929	0.375	0.375
WSL12	1.515	1.399	1.140	1.024	0.375	0.375
WSL13	1.600	1.484	1.140	1.024	0.460	0.460
WSL14	1.708	1.606	1.248	1.146	0.460	0.460
WSL2	0.976	0.853	0.726	0.603	0.250	0.250
WSL3	1.186	1.063	0.726	0.603	0.460	0.460
WSL4	1.186	1.046	0.862	0.722	0.324	0.324
WSL5	1.237	1.097	0.862	0.722	0.375	0.375
WSL6	1.322	1.182	0.862	0.722	0.460	0.460
WSL7	1.251	1.170	0.927	0.846	0.324	0.324
WSL8	1.302	1.221	0.927	0.846	0.375	0.375
WSL9	1.387	1.306	0.927	0.846	0.460	0.460

Blue highlighted items are industry standard and most frequently ordered.

WEJTAP™ INSTALLATION TOOLS

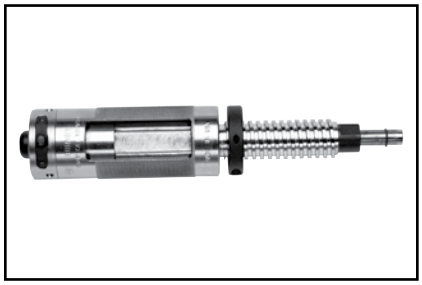

Type WTB

The WEJTAP™ patented tool body is a one-piece assembly basic drive mechanism used to install WEJTAP™ and STIRRUP™ connectors ranging from #8 AWG through 1590 kcmil ACSR.

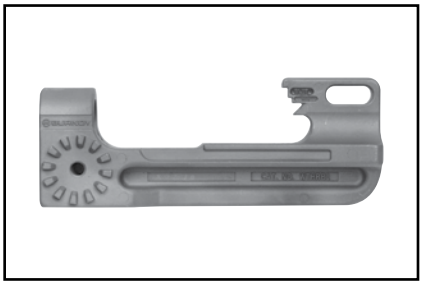

Type WTHRB1S

WEJTAP™ tool head operating platform for small and medium range (red/blue coded) connectors.

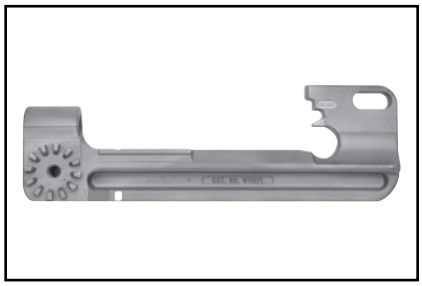

Type WTHY1S

WEJTAP™ tool head operating platform for medium and large range (yellow coded) connectors.

WEJTAP™ INSTALLATION TOOL ACCESSORIES

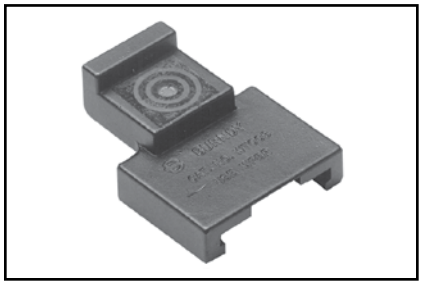

Type WTOCBR

WEJTAP™ removal clip for red type II and medium (blue coded) tap connectors used with type WTHRB tool head.

Type WTOCY

WEJTAP™ removal clip for large (yellow coded) tap connectors used with type WTHY tool head.

Type WTCK

WEJTAP™ tool cleaning/maintenance kit for use with type WTB tool body.

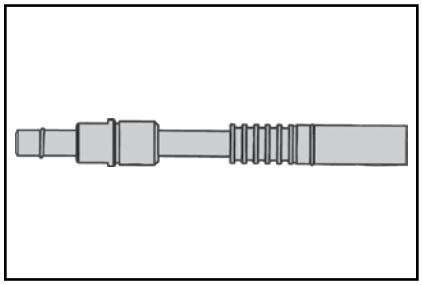

Type WTBASY1

WEJTAP™ ram replacement assembly.

Blue highlighted items are industry standard and most frequently ordered.

WEJTAP™ POWERLUG™

WEJTAP™ POWERLUG™ terminals are made of cast aluminum alloy for termination of ACSR and Aluminum conductors.

2 Hole POWERLUG™

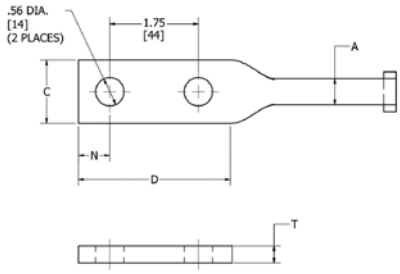

Fig. 1

4 Hole POWERLUG™

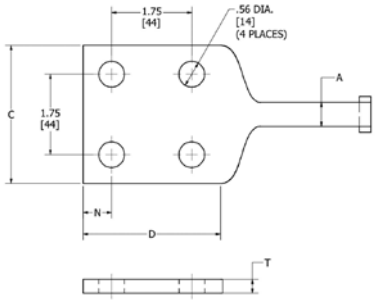

Fig. 2

4 Hole Flag

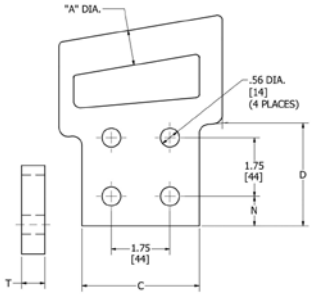

Fig. 3

Catalog Number	Tap Groove for Connector Selection	Standard Conductor		Figure No.	Holes in Pad	Dimension			
		ACSR	ASC/AAC			C	D	N	T
WCAB30R-2N	4/0 Standard ACSR (.563 in OD)	6 Str. - 266.8	6 Str. - 300	1	2	1-1/4	3	5/8	0.34
WCAB30R-4N				2	4	3	3	5/8	0.30
WCBB30R-4N				3	4	3	3	5/8	0.30
WCAY39R-2N	336.4 Standard ACSR (.721 in OD)	266.8 - 556.5	336.4 - 636	1	2	1-3/4	3	5/8	0.34
WCAY39R-4N				2	4	3	3	5/8	0.30
WCBY39R-4N				3	4	3	3	5/8	0.30
WCAY49R-2N	795 Standard ACSR (1.108 in OD)	605 - 1033.5	715.5 - 1113	1	2	1-3/4	3-1/2	7/8	0.69
WCAY49R-4N				2	4	3-1/2	3-1/2	7/8	0.69
WCBY49R-4N				3	4	3-1/2	3-1/2	7/8	0.69

NOTE: The recommended connector and booster are ordered separately. Catalog number is for the POWERLUG™ only. Use the Tap Groove Connector diameter, along with the application run conductor diameter, to choose the correct WEJTAP™ connector.

MULTIPLE CONDUCTOR TAP APPLICATION

Connector	*Run Groove	*Tap Groove
WCY 64 PB	Three - 1/0 ACSR (6/1) Diameter = 0.398	One - 4/0 ACSR (6/1) Diameter = 0.563
WCY 65 PB	Three - 1/0 ACSR (6/1) Diameter = 0.398	One - 3/0 ACSR (6/1) Diameter = 0.502
WCY 63 PB	Three - 2/0 ACSR (6/1) Diameter = 0.447	One - 4/0 ACSR (6/1) Diameter = 0.563
WCB 11 PB	Three - #4 stranded Diameter = 0.232	One - 1/0 ACSR (6/1) Diameter = 0.398
WCY 54 PB	Three - 1/0 stranded Diameter = 0.368	One - 4/0 stranded Diameter = 0.522
WCY 53 PB	Three - 1/0 stranded Diameter = 0.368	One - 3/0 stranded Diameter = 0.464
WCY 64 PB	Three - 2/0 stranded Diameter = 0.414	One - 4/0 stranded Diameter = 0.522
WCB 11 PB	Three - #4 stranded Diameter = 0.232	One - 1/0 stranded Diameter = 0.368

* Electrically, the three smaller conductors are the likely taps, however, during installation, they are located in the larger run groove due to their larger aggregate sum.

Blue highlighted items are industry standard and most frequently ordered.

WEJTAP™ HOTSTICK ACCESSORIES

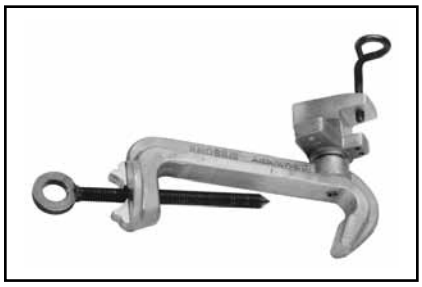

Type WHSCWH

WEJTAP™ hotstick connector clamp used to hold the tap connector spring-body and wedge for installation on energized lines with the shotgun hotstick.

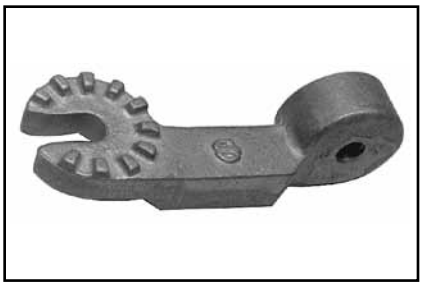

Type WHSWHADP

WEJTAP™ hotstick angle wedge holder adapter attaches wedge clamp to universal hotstick for hotline installation.

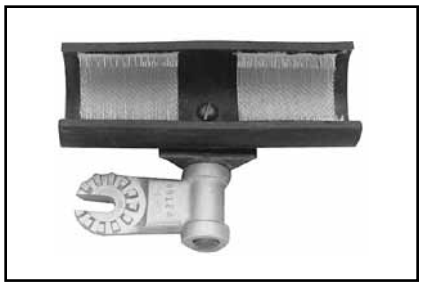

Type WHSWB

WEJTAP™ hotstick wirebrush attaches to the universal hotstick for cleaning the contact surface of the line conductor.

Type WHSPBC

WEJTAP™ hotstick dual cable clamp used to hold run and tap conductors in position during hotline installation. Universal for all applications from #8-1272 ACSR.

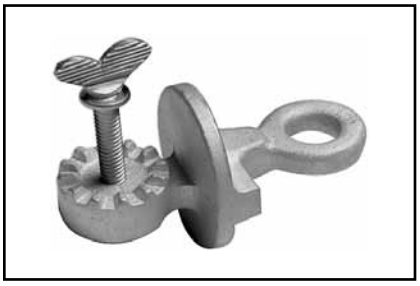

Type WCHAWAS

WEJTAP™ hotstick angle wedge holder adapter attaches wedge clamp to universal hotstick for hotline installation with shotgun stick.

Type WHSGB

WEJTAP™ hotstick breech drive. Geared shotgun hotstick adapter easily latches to the breech end of WEJTAP™ installation tool without disassembly for use on energized lines.

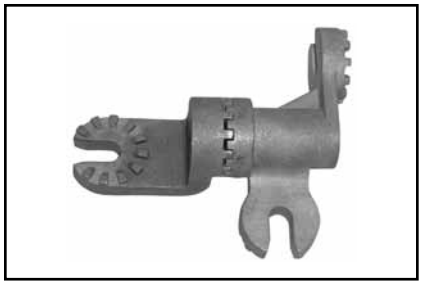

Type WHSSADP

WEJTAP™ hotstick spring loaded 90 degree adapter, used to attach tool to universal hot-stick for hotline installations.

Type WHSTA

WEJTAP™ hotstick tool (actuator) hammer attaches to the universal hotstick for striking the tool actuator button to complete the installation.

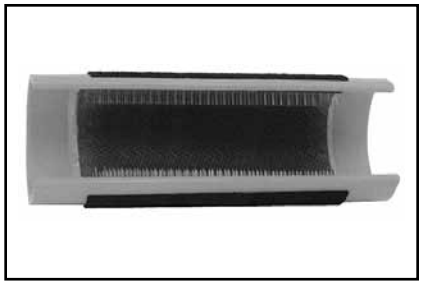

Type WHHWB

WEJTAP™ hand-held wire brush for cleaning surface contact areas on non-energized conductors.

Blue highlighted items are industry standard and most frequently ordered.

WEJTAP™ KIT ORDERING INSTRUCTIONS

Type WTCC
(Carrying Case Only)

WEJTAP™ plastic carrying case. Designed for rugged use in all weather conditions. It accommodates WEJTAP™ installation tool, removal clips, and cleaning kit.

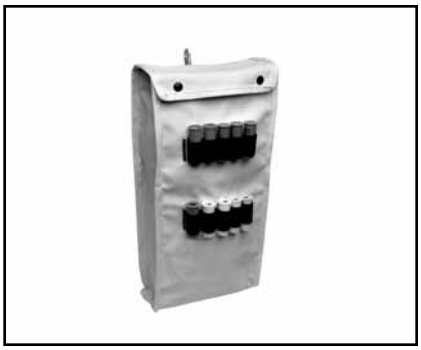

Type WABAG

WEJTAP™ accessories bag is designed for use in carrying installation tool(s), removal clips, and cleaning kit. Hotstick accessories may be accommodated as well. Holders for power boosters are conveniently located on the outside of the bag.

	*Non-Hot Stick Power Unit	Hot Stick Power Unit	Self-Firing Tool	Large Frame (Yellows)	Large Frame Take Off Clip	Small Frame (Red, Blue)	Cleaning Kit	Small Frame Take Off Clip	Molded Carrying Case	Canvas Style Tool Bag
Component / Kit Catalog No.	WTBNHS	WTB	WTBGBW	WTHY-1S	WTOCY	WTHRB-1S	WTCK	WTOCBR	WTCC	WABAG
WT2B2RBYWABAG		2		1	1	1	1	1		1
WT2BRBYWABAG		2				1	1	1		1
WTRBYK		1		1	1	1	1	1	1	
WTRBYKNHS	1			1	1	1	1	1	1	
WTYK		1		1	1		1			
WTYKNHS	1			1	1		1			
WTRBK		1				1	1	1	1	
WTRBKNHS	1					1	1	1	1	
WT2BRBYK		2		1	1	1	1	1	1	
WT2B2RBYK		2		1	1	2	1	1	1	
WTY		1		1			1			
WTRB		1				1	1			
WTYWABAG		1		1	1		1			1
WTYKNHSBAG	1			1	1		1			1
WTRBWABAG		1				1	1	1		1
WTRBKNHSBAG	1					1	1	1		1
WTBGBWRBYK			1	1	1	1	1	1	1	
WTRBYWABAG		1		1	1	1	1	1		1
WTRBYKNHSGAB	1			1	1	1	1	1		1

* Non-Hotstick power units do not contain features allowing activation with Hotsticks. They are not upgradeable.

Contact your BURNDY® rep resentative for a WEJTAP™ demonstration or contact the factory at 1-800-346-4175

Blue highlighted items are industry standard and most frequently ordered.

WEJTAP™ In-Line Disconnect

The BURNDY® In-Line Disconnect utilizes proven WEJTAP™ Technology in combination with industry standard components to provide reliable performance of switch applications.

1. Utilizes WEJTAP™ connectors for securing the switch to the distribution line in tension applications.
2. Utilizes industry recognized and proven GST&D Products, LTD. blade components along with dual Advance Rubber Products, Inc., Insulators attached to a BURNDY® designed yoke plate assembly.
3. WEJTAP™ In-Line Disconnect designed for use in gloving and hot stick applications in conjunction with an industry standard load break tool.
4. Dual insulators minimize the switch movement during opening and closing of the blade.
5. Installation steps are minimized. The switch can be snapped directly on the line and secured with our conductor pivot retainer, designed into the switch frame.
6. WEJTAP™ tooling is used to secure the "C Member" to the built-in wedge feature of the frame. Providing reliable mechanical and electrical performance.
7. The blade is positioned on the switch to simplify cutting the conductor during installation.
8. In-Line Disconnect is removable and reuseable.
9. Other conductor sizes available. Please contact factory.

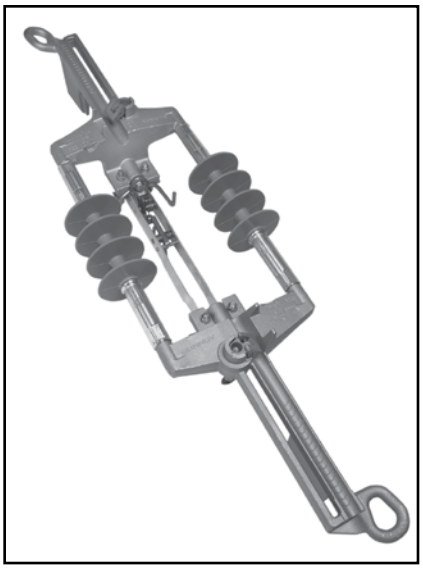

Product Specifications

Voltage: 15 kV (110 kV BIL), 29 kV (150 kV BIL), 35 kV (200 kV BIL)

Current: 900 Ampere RMS

Short Circuit: Momentary Current 40,000 Ampere RMS, Asymmetrical

Three Second Current 25,000 Ampere RMS, Symmetrical

Strength: Body 10,000 lbs. Pulling Eye 6,000 lbs.

Insulators: Silicone

Meets Industry Standards: ANSI C119.4, C37.32 IEEE C37.30, C37.34 CSA C83.71 ASTM B117 Salt Fog

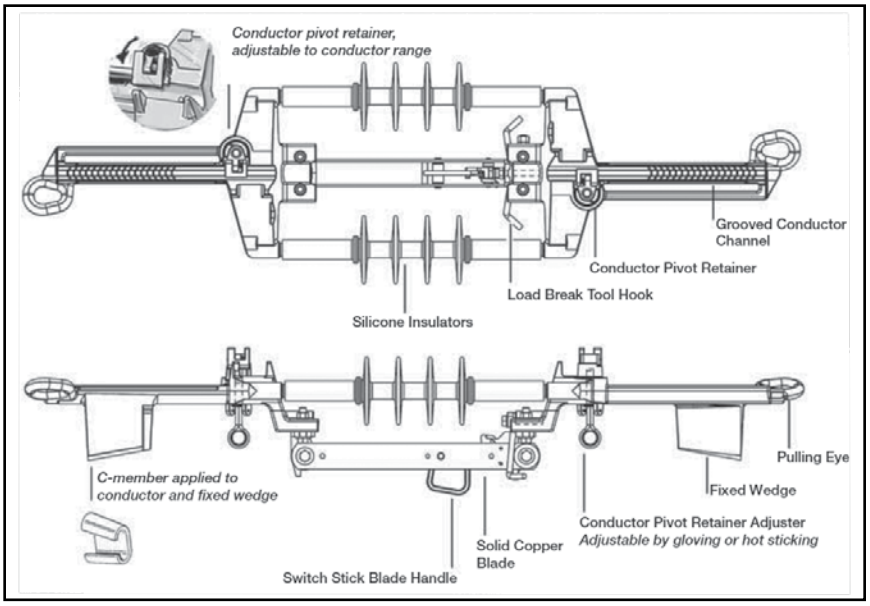

Catalog Number	KV/BIL Ratings	Conductor Dia. Range	Common Conductors		Replacement Tap
			ACSR	AAC	
WAD1015	15 kV/110 kV BIL	0.368" - 0.502"	1/0 (6/1), 2/0 (6/1), 3/0 (6/1)	1/0, 2/0, 3/0	WADRT 1
WAD1029	29 kV/150 kV BIL				
WAD1035	35 kV/200 kV BIL				
WAD4015	15 kV/110 kV BIL	0.522" - 0.609"	4/0 (6/1), 266.8 (18/1)	4/0, 250, 266.8 (7 Str. , 19 Str.), 336 compact	WADRT 1
WAD4029	29 kV/150 kV BIL				
WAD4035	35 kV/200 kV BIL				
WAD336-15	15 kV/110 kV BIL	0.642" - 0.723"	266.8 (26/7), 336.4 (18/1, 26/7)	336, 350, 397.5, 477 compact	WADRT 2
WAD477-15	29 kV/150 kV BIL				
WAD556-15	35 kV/200 kV BIL				
WAD336-29	15 kV/110 kV BIL	0.741" - 0.814"	336.4 (30/7), 397.5 (All Str.), 477 (18/1)	477 (19 Str. , 37 Str.), 500 (19 Str. , 37 Str.), 556 compact	WADRT 1
WAD336-35	29 kV/150 kV BIL				
WAD477-29	35 kV/200 kV BIL				
WAD477-35	15 kV/110 kV BIL	0.846" - 0.883"	477 (24/7, 26/7, 30/7), 556 (18/1)	556 (19 Str. , 37 Str.)	WADRT 2
WAD556-29	29 kV/150 kV BIL				
WAD556-35	35 kV/200 kV BIL				
WAD795-15 *	15 kV/110 kV BIL	0.953" - 1.040"	556 (30/7), 795 (36/1)	795 (37 Str. , 61 Str.)	WADRT 3
WAD795-29 *	29 kV/150 kV BIL				
WAD795-35 *	35 kV/200 kV BIL				

* Contact Factory

Blue highlighted items are industry standard and most frequently ordered.

Products for Underground Network and Residential Distribution Systems

TABLE OF CONTENTS

Underground Network Distribution Products

Technical Data:
Underground System Connection and Protection — K-3

Types of BURNDY® Underground Connectors & Accessories — K-4

MOLE™

Multiple Outlet Connectors
Technical Data — K-7
How to order your BURNDY® MOLE™ — K-8

MOLE™ Types — K-9 to K-31

MOLE™ Accessories — K-31 to K-36

HYCRAB™
Technical Data — K-37

HYCRAB™ and Accessories — K-37, K-38

Limiters

Technical Data — K-39, K-40

Limiters and Accessories — K-41 to K-58

High Capacity Limiter — K-59 to K-60

Underground Residential Distribution Products

MOLE™
Types **RDMD-28G, RDMD2858D, RDMD-28CR** — K-61

Types **RDM-28, RDM-28T** — K-62

MOLE™ Tap Kits
Types **RA6UC-SL, RA6UCR-SL** (URD Street Lighting Tap Kit) — K-62

Types **RYA-UC, RYA-AC, RYA-UCR, RYA-ACR** — K-63

Overhead or Underground Secondary Connectors
Type **BSSBC** — K-64

Submersible Secondary Connectors — K-65
Types **BSSBC, BDESS**

URD Insulated Splice Kit — K-66
Type **YS-CG**

Y-LOK — K-66

HYREDUCER™ Splices
Type **YRB-U** — K-67 to K-69

Type **YRB-T** — K-70

Submersible Splice Covers
Types **BSSI, BTWTC** — K-71

Service Taps and Terminals
Types **K-P-C, YPC-C** — K-72
Types **K6B, K33B** — K-73
Types **F-A, K6A34U, K-P-UC** — K-74

Power Distribution Blocks
Types **BPD, BPD2** — K-75

Blue highlighted items are industry standard and most frequently ordered.

Products for Underground Network Distribution Systems
TABLE OF CONTENTS

MOLE™

1500 AMP
- Type ZM K-9
- Type ZMT K-10
- Type ZME K-11
- Type ZML K-12
- Type ZMX K-13
- Type ZMK K-14

2000-2500 AMP
- Type ZM K-15
- Type ZMT K-16
- Type ZME K-17
- Type ZML K-18
- Type ZMX K-19
- Type ZMK K-20

3000 AMP
- Type ZM K-21
- Type ZMT K-22
- Type ZME K-23
- Type ZML K-24
- Type ZMX K-25
- Type ZMK K-26

MOLE™ Stud Connectors
- Type ZMLDN K-27, K-28
- Type Z2MLDN K-29
- Type ZMDN K-30
- Type ZMTDN K-31

MOLE™ Outlet Plugs
- Type Z-P K-31

Socket and Nut Assembly
- Type Z-NR K-32

MOLE™ Compression Cone
- Type Z K-33, K34

MOLE™ Coupler
- Type ZMS K-35

MOLE™ Sleeves
- Type CM (NOTAPE™) K-35
- Type Z-C (Outlet Insulating Sleeve) K-36

HYCRAB™
- Type ZM K-37
- Type YNM K-38

Limiters
- Type YFS-CR, YFS-CP K-41
- Type YFS-CPL K-42
- Type YFSR, YFSP K-43
- Type YFSP-L K-43
- Type YFA-CR, YFA-CP K-44
- Type YFA-CPL K-45
- Types YFAR, YFAP K-46
- Type YFAP-L K-47
- Types YFM-CR, YFM-CP K-48
- Type YFM-CPL K-48
- Types YFMR, YFMP K-49
- Type YFMP-L K-49
- Type VYFT K-50
- Type NYFT K-50
- Type LYS K-51
- Type LYM K-52
- Type LF K-53
- Type LYBASE K-54
- Type LYS34P2 K-54
- Type LYS-P5 K-55
- Type LYM34P3 K-56
- Type LYS-P6 K-56

Network Protector Fuses
- Type Y, Z K-57

T-Connector
- Type NYT K-58

Blue highlighted items are industry standard and most frequently ordered.

UNDERGROUND SYSTEM CONNECTION AND PROTECTION

Nowhere in the distribution of electrical power are the problems of connecting conductors and equipment against the effects of fault currents as complex as in underground systems. For more than 85 years, BURNDY® engineers have worked closely with utilities to develop devices for connecting and protecting conductors and associated equipment in underground systems. These devices, with their inherent dependability and economy, have contributed to the rapid growth of underground systems throughout the country. To assist utility personnel in more effectively selecting and applying these devices, the engineering talent and experience of BURNDY have been pooled to prepare this technical section, and the catalog information that follows.

These devices are designed for use in both radial and network type underground systems. Radial systems (Fig. 1) distribute power economically except in high load density areas where a high degree of service reliability is required.

Network systems (Fig. 2) have become standard for AC power distribution where load density is high and service continuity must be assured under nearly all conditions. The improved equipment and methods which are described in this catalog have been designed to meet these secondary network system requirements and to reduce the cost of installation and maintenance.

Early Problems in Underground Connections

Despite the many advantages of underground distribution, a major problem was that of making dconnections in congested manholes or junction boxes. The necessary procedure - soldering conductors, taping joints, and wiping lead covered cable - was so complex, that it demanded considerable skill and was time consuming and costly. This involved procedure had to be repeated each time a service was added to a main. When completed, the multiple-branch joints were excessively bulky and their electrical and mechanical performance suffered from the shortcomings of soldered connections.

The installation of underground distribution made greater strides as those early connection methods gave way to specialized products and technicques developed by BURNDY at the request of, and in close collaboration with, engineers of leading utilities. These specialized connectors were easier and more economical to install, more compact, and more dependable electrically and mechanically.

For installation in conjunction with these connectors, BURNDY also developed products to protect the secondary system from the effects of fault currents. The continuing improvement of these products based on field experience and laboratory research, is contributing to even greater dependability and economy in underground distribution.

Design Objectives in Connectors for Underground

While each of the principal types of equipment described in the following pages has been designed to meet particular service requirements, all have several basic objectives in common:

Reliability: To minimize outages and their serious consequences in the high load density areas serviced by underground systems.

Ease of Installation: Compact for easy installation in the confined space of a manhole and transformer vaults. Mechanical connections that eliminate difficult solder joints.

Economy: By reducing the time and skill required for installation of a dependable, insulated compact connection.

Versatility: For permitting easier changes, expansion, and additional services with a minimum of system shutdown.

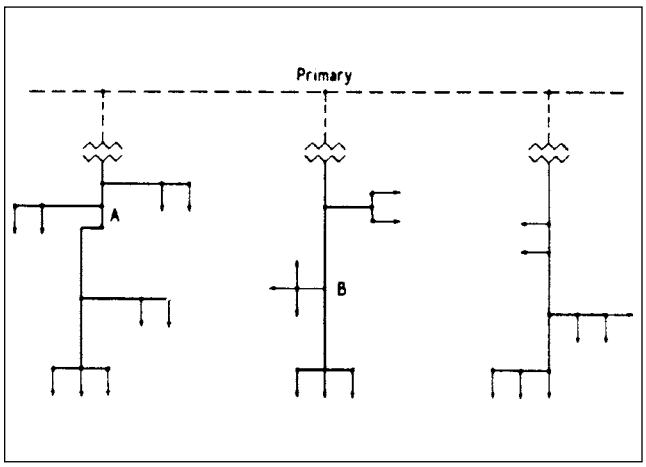

Figure 1: Radial Secondary Distribution System

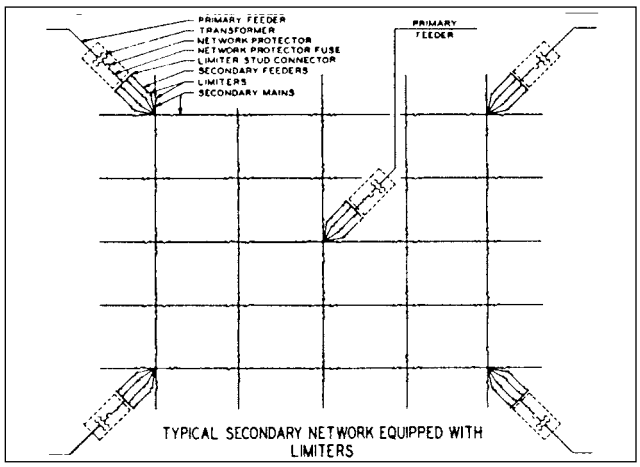

Figure 2: Typical Secondary network Equipped with Limiters

TYPES OF BURNDY® UNDERGROUND CONNECTORS & ACCESSORIES

The MOLE™ and HYCRAB™
The most popular of the engineered connectors developed specifically for underground manholes and trasformer vaults are the MOLE™ and HYCRAB™ that provide for multiple connections at a single junction point of main, feeder, and service cables. Pre-insulated to eliminate extensive taping, these connectors are essentially bus bars with several cable outlets: mechanical installation of the MOLE™, and compression installation in the HYCRAB™.

Limiters and Fuses
To prevent "roasting" of cable insulation, resulting from fault current, BURNDY has developed cable limiters that are inserted in each secondary cable at all junction points. Network protector fuses have been designed to back up the protector breaker in teh event of a malfunction during a transformer or primary cable fault. By coordinating the time current characteristics of the fuse with those of the cable limiters, the possibility of limiter blowing on primary faults is eliminated, which in turn redcuces the fault finding task. Also, limiter, fuse, and cable insulation characteristics must be carefully coordinated to assure isolating a fault on the secondary before it can cause extensive damage or interrupt service in other sections of the secondary system.

High Capacity Limiter 200,000 Amperes at 600 Volts
The BURNDY® High Capacity Limiter is designed to economically protect electrical distribution systems from teh destructive effect of high energy faults. The increasing number of 600 volt secondary network installations for industrial and commercial applications demand a cable limiter that can safely interrupt 200,000 amperes (symmetrical available) and one that will also completely coordinate with the higher voltage network protector fuses.

Available fault currents as high as 200,000 amperes rms at 600 volts across the fusible elements have been interrupted during tests on the BURNDY® High Capacity Limiter. The power factor during these tests was less than 15%, thereby imposing the most difficult clearing conditions. No external disturbance is experienced upon clearing fault currents from the "float" value to 200,000 amperes. The quartz filler absorbs the intense energy generated by interrupting the fault current. The quartz fuses into tobular fulgurites, with a high dielectric strength, and forms an insulating barrier between the melted link sections. This action prevents restrike of the internal arc. The rugged glass melamine housing provides a vessel that completely contains the developed energy.

This carefully developed time-current characteristcs and rigid manufacturing tolerances assure proper coordination with the network protector fuses and the insulation damage characteristics of 4/0, 250, 350, 500, and 750 kcmil cable.

The High Capacity Limiter is available in four variations to accommodate a variety of installation practices. The Type HYS has cable sockets at both ends, which allow for indenting to the cable ends with a hydraulic BURNDY® HYPRESS™. The HYAO type has an offset lug on one end which permits back-to-back mounting on bus bar.

For those installations where the BURNDY® MOLE™ product is used for manhole junctions or transformer vault buses, the Type HYM permits a replaceable connection of the limiter directly to the MOLE outlet at one end and a compression cable connection at the other.

Modern electrical distribution systems require low cost protection to safeguard costly equipment and quickly isolate faults, so that the undamaged portions of the system may function normally. BURNDY® High Capacity Limiters assure positive, economical protection when installed in properly designed systems.

Compression Connectors
BURNDY® HYDENT™ compression type connectors, and installation tools, have been designed for splicing and terminating copper as well as aluminum underground cables, in both primary and secondary circuits. BURNDY tools and dies are custom designed to produce sound electrical, and mechanical joints on BURNDY connectors. The use of the BURNDY® Engineered System with matched tools, connectors and dies, assures optimum results.

Residential Underground
The trend toward improvement in neighborhood appearances, and the elimination of storm outages, tree trimming, etc. has created the need for residential underground distribution. To meet these needs, BURNDY offers: Mechanical type pre-insulated multi-conductor terminal connectors for submersible transformer locations; and compact multiconductor connectors for above ground transformer and enclosures. For service taps, BURNDY offers: Pre-insulated multi-conductor compression and mechanical connectors; and a range taking compression connector for below grade service. Power pedestals for direct burial, above ground application, and conduit systems are offered. Residential Underground Fuse Block assembly with replaceable fuse for each service cable is also available.

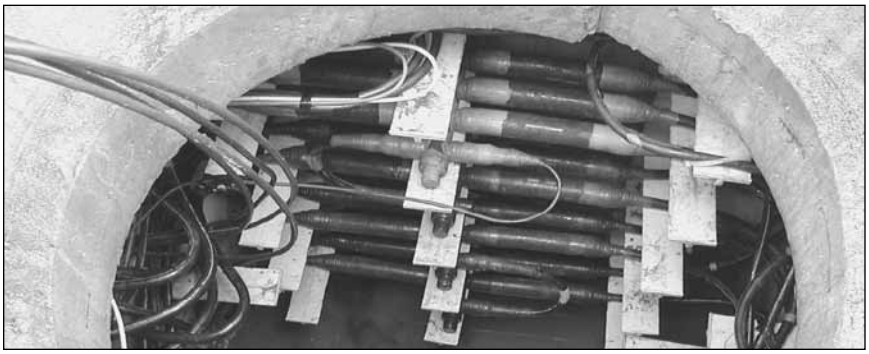

MULTIPLE OUTLET CONNECTORS

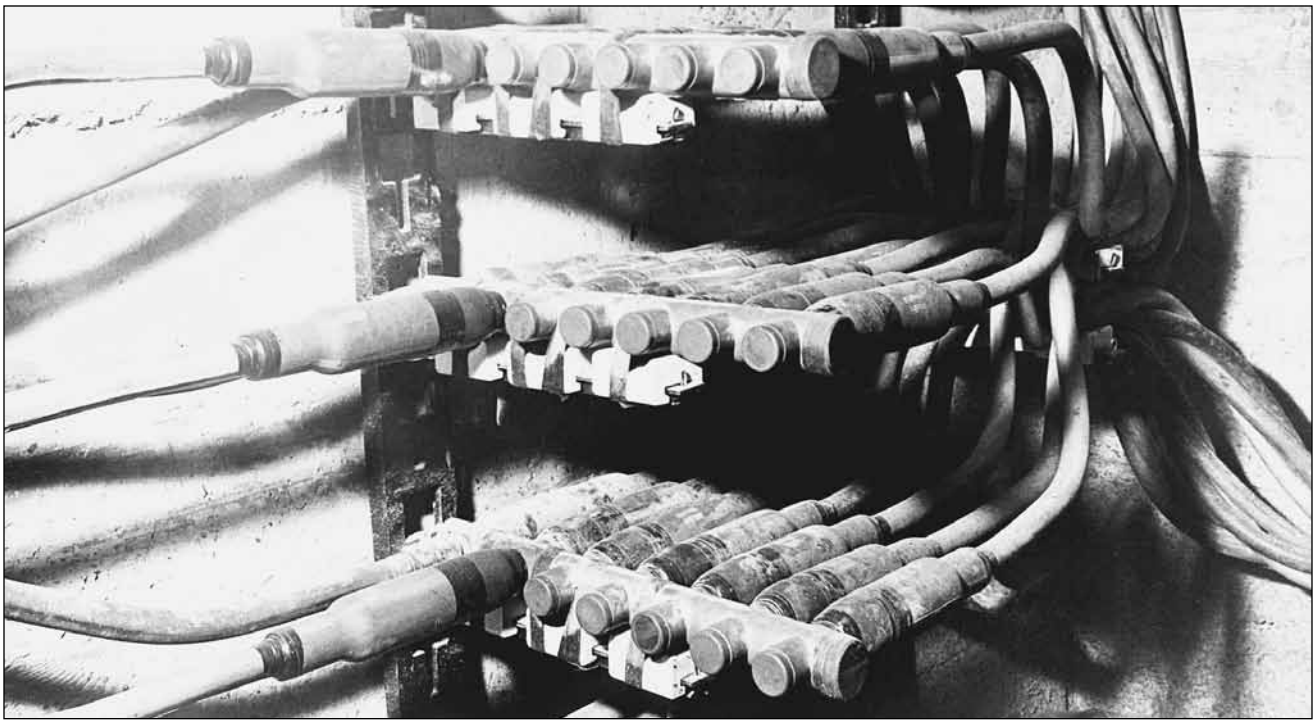

Connectors for Aluminum
For systems where aluminum is used, connectors especially designed for aluminum conductors are available in bolted and compression types: HYCRAB™, HYPLUG™, HYREDUCER™, and HYSOCKET. Aluminum conductors can be connected to standard MOLE™ connectors by using HYPLUG™ adapters.

Multiple Outlet Connectors
The increasing use in modern electrical distribution systems of junction points where several relatively large cables must be connected, has brought about the development of BURNDY® MOLE™ line equipment to speed up and simplify the making of such connections. The modern tendency toward network systems not only in underground utility practice but also in industrial wiring, has greatly increased the number of multi-connection joints.

The BURNDY® MOLE™ and HYCRAB™ connectors are insulated bus bars with multiple connector outlets for service cables, secondary mains or equipment leads. In the MOLE™, clamping action secures conductors to the connector; in the HYCRAB™, connections are made by indenting with a compression tool. Both lines of insulated connectors offer the following basic advantages:

1. ***Ease of Economy and Installations:*** The ease and reduction of time required to make and insulate dependable multi-connections greatly reduces the cost of installation. The compact design makes maximum use of space and provides for simplified racking.
2. ***Versatility for System Modification:*** The MOLE™ and HYCRAB™ are designed to accommodate the secondary main and service cables, and permit easy modification or later additions. The numerous available connector configurations permit a wide variety of arrangements of cables and equipment connections. The 600 volt rating of the MOLE™ and HYCRAB™ insulation provides for efficient operation at all standard utilization voltages.
3. ***Efficient, Dependable Performance:*** The MOLE™ and HYCRAB™ connectors assure permanent, high conductivity connections, good moisture seal, and insulation that resists the severest condition encountered in underground installations.

MOLE™ and HYCRAB™ Insulation
The location in vaults and manholes often exposes these connectors to immersion in water, chemical, and other contaminants, as well as to heat from overload or fault currents. The MOLE™ and HYCRAB™ insulations provide electrical, mechanical, and thermal properties essential to assure the service continuity of underground distribution systems.

Recognizing the importance of proper connection insulation, BURNDY established performance specifications exceeding those of 600 volt cable insulation.

MULTIPLE OUTLET CONNECTORS (Continued)

The MOLE™ and MOLE™ Accessories
The BURNDY® MOLE™ is a multi-cable connectors that consists of a pre-insulated copper bus bar with threaded outlets that permit a minimum of two cables to be connected by means of a socket, nut, and cone assembly (Illustration A). The clamping action of the socket, nut, and cone assembly on the cable develops high contact pressures that maintain joint conductivities greater than 100% of the continuous conductor. A compression socket that is threaaded into the MOLE™ insert is also available. The MOLE™ design affords exceptional versatility in four ways:

1. MOLE™ outlets can be plugged-off until needed for the addition of cables.
2. Installed cables can be easily removed.
3. Cable sizes can be increased by changing the socket, nut, and cone assembly.
4. The number of outlets may be increased by joining MOLE™ connectors with a MOLE™ coupler.

Insulation
The copper bus bar insert is encased in a molded insulating jacket that eliminates crotch taping. The thickness of the jacket prevents any possibility of the insert weight to cause the insulation at the supports to flow away at the high temperatures of fault conditions.

Ratings
MOLE™ connectors are rated at 1500, 2000, 2500, and 3000 amperes, based on teh maximum current the insert cross-section can carry. Each outlet can carry the full rated current of the cable connected to it.

To avoid exceeding the insert rating, the cables should be arranged in such a manner that most current flows directly across the insert. (See Illustration B.)

Installation
Cables are connected to the MOLE™ by means of a socket, nut and compression cone assembly. The socket is threaded into the MOLE™ insert. The stripped cable end is inserted into nut and compression cone, and then into the socket where it is securely clamped by tightening the nut. The joint is then sealed watertight in one of three ways:

- Taping;
- MOLE™ Outlet Insulating Sleeves, sealed with a minimum of taping;
- NOTAPE™ MOLE™ Sleeve, sealed to the cable and MOLE™ insulation by two non-corrosive hose clamps.

Tests under flooding and other adverse conditions demonstrate that such joints are impervious to water.

Illustration A

Accessories
A socket, cone and nut assembly is screwed into each MOLE™ outlet to which a cable is to be connected. The socket has a tapered recess into which the clamping nut forces the cable into the compression cone. The cone is slotted to controlled widths and depths for maximum flexibility, and its inside surface is serrated for low contact resistance and high pullout strength.

A compression socket is available that threads directly into the MOLE™ outlet and provides a compression sleeve for connecting the cable with HYPRESS™ tools.

Plug seal MOLE™ outlets not in use. The MOLE™ is delivered with one-fourth of its outlets sealed with plugs. Additional plugs may be ordered.

MOLE™ couplers facilitate system expansion by joining additional MOLE™ connectors to those already installed. Couplers are easily installed in end or side outlets of the MOLE™, and make connections that are effective both electrically and mechanically.

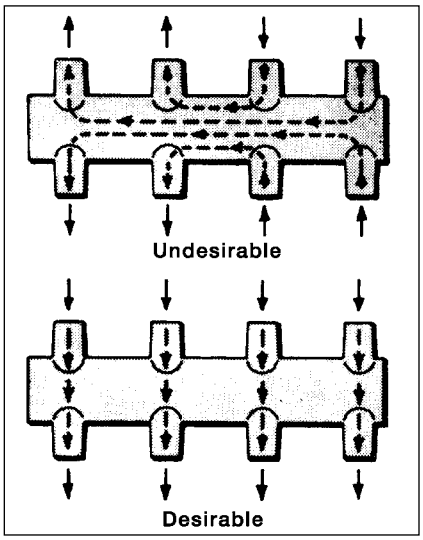

Illustration B

MULTIPLE OUTLET CONNECTORS (Continued)

HOW TO ODER YOUR BURNDY® MOLE™

This MOLE™ connector section is arranged so that all the information necessary for ordering standard MOLE™ connections in contained on a single page.

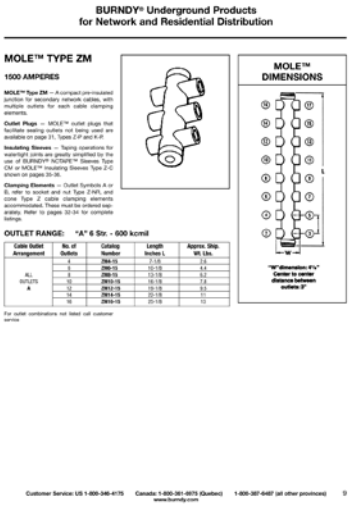

BURNDY® Underground Products
for Network and Residential Distribution

MOLE™ TYPE ZM

1500 AMPERES

MOLE™ Type ZM — A compact pre-insulated junction for secondary network cables, with multiple outlets for each cable clamping elements.

Outlet Plugs — MOLE™ outlet plugs that facilitate sealing outlets not being used are available on page 31, Types Z-P and K-P.

Insulating Sleeves — Taping operations for waterlight joints are greatly simplified by the use of BURNDY® ACTAPE™ Sleeves Type CM or MOLE™ Insulating Sleeves Type Z-C shown on pages 34-36.

Clamping Elements — Outlet Symbols A or B, refer to socket and nut Type Z-NR, and cone Type Z cable clamping elements accommodated. These must be ordered separately. Refer to pages 32-34 for complete listings.

OUTLET RANGE: "A" 6 Str. - 600 kcmil

Cable Outlet Arrangement	No. of Outlets	Catalog Number	Length Inches L	Approx. Ship. Wt. Lbs.
ALL OUTLETS A	4	ZM4-15	7-1/8	2.8
	6	ZM6-15	10-1/8	4.4
	8	ZM8-15	13-1/8	6.2
	10	ZM10-15	16-1/8	7.8
	12	ZM12-15	19-1/8	9.5
	14	ZM14-15	22-1/8	11
	16	ZM16-15	25-1/8	13

For outlet combinations not listed call customer service

MOLE™ DIMENSIONS

"W" dimension "4"±" Center to center distance between outlets 3"

Customer Service: US 1-800-346-4175 Canada: 1-800-361-6975 (Quebec) 1-800-387-6487 (all other provinces) 9
www.burndy.com

MOLE™ Connector listings are arranged by:

Amperes: 1500; 2000-2500; 3000

MOLE™ Type: ZM, ZMT, ZME, etc. within each ampere grouping

Cable Outlet Ranges:
Symbol "A" = #6 Str. - 600 kcmil; 5/8"
Symbol "B" = #2 Str. - 1000 kcmil; 7/8"
Symbol "C" = 500 - 1500 kcmil; 1-1/8"

Cable Outlet Arrangement:
Depending on ampere group, outlets may be all "A" or "B" cable size, or may be combinations of sizes; Outlet #1, "A": all other outlets "B", etc. (See suffix list below.)

Number of Outlets per MOLE™:
From 2 to 16 outlets depending on MOLE™ type (any number can be supplied).

Catalog Numbers, Dimensions, and Weights.

MOLE™ CONNECTORS ARE ORDERED BY THE FOLLOWING PROCEDURE:

1. Determine amperage that meets requirements and located it in the MOLE™ ampere page listings.
2. Choose MOLE™ configuration desired by Type (ZM, ZME, ZMT, etc.) within ampere group.
3. Decide of the number of outlets that meets your requirements.
4. Decide on the cable ranges required for each outlet.
5. Select cable outlet arrangement for MOLE™ listing: outlet #1, "A": all other "B", etc.

EXAMPLE:
Installation load capacity: 2000 amperes
Configuration: outlets on two sides and one end
Cable ranges: end outlet to accommodate a 1000 kcmil cable; other outlets: two 700 kcmil, two 600 kcmil and two 500 kcmil cables

PROCEDURE:
1. Locate 2000 through 2500 ampere MOLE™ groups
2. MOLE™ Type ZMT has outlets on two sides and one end
3. Cable outlet symbol "B" = #2 Str. - 1000 kcmil. MOLE™ outlet arrangement: Outlet #1 = "B", all other outlets = "B".
4. Catalog Number ZMT7-25B is the correct number. See other pages for socket and nut assembly, compression cones and insulating sleeves.

Suffix List:
A3: Outlet #1 = B; all others = A
A4: Outlet #1 and X = B; all others = A
A7: Outlet #1 and X = C; all others = A
A9: Outlet #1 = C; all others = A
B12: Outlet #1 = A; all others = B
B72: Outlet #1 and X = C; all others = B
B92: Outlet #1 = C; all others = B

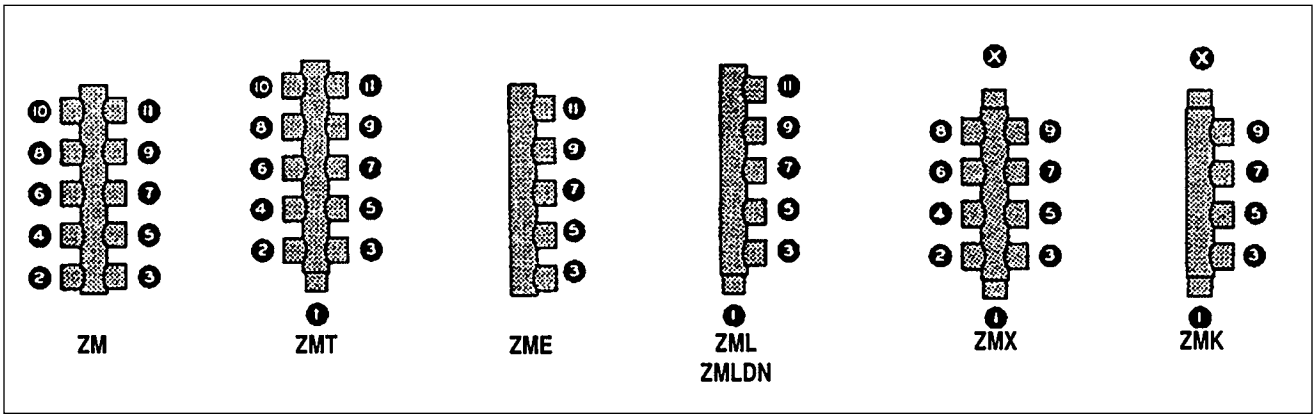

Blue highlighted items are industry standard and most frequently ordered.

MOLE™ TYPE ZM

1500 AMPERES

MOLE™ Type ZM — A compact pre-insulated junction for secondary network cables, with multiple outlets for each cable clamping elements.

Outlet Plugs — MOLE™ outlet plugs that facilitate sealing outlets not being used are available, Types Z-P and K-P, sold separately.

Insulating Sleeves — Taping operations for watertight joints are greatly simplified by the use of BURNDY® NOTAPE™ Sleeves Type CM or MOLE™ Insulating Sleeves Type Z-C, sold separately.

Clamping Elements — Outlet Symbols A or B, refer to socket and nut Type Z-NR, and cone Type Z cable clamping elements accommodated. These must be ordered separately.

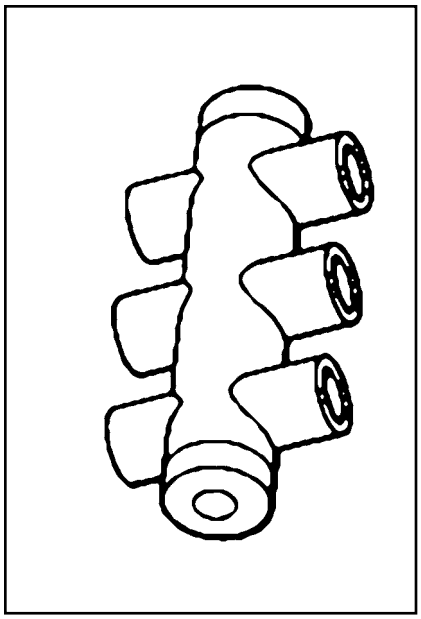

MOLE™ DIMENSIONS

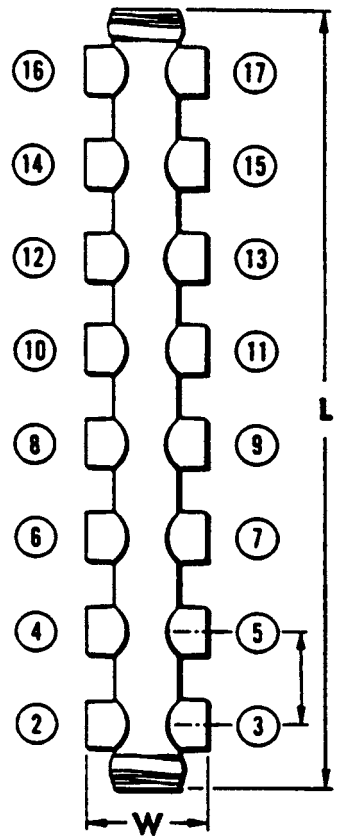

"W" dimension: 4 1/8"
Center to center distance between outlets: 3"

OUTLET RANGE: "A" 6 Str. - 600 kcmil

Catalog Number	Cable Outlet Arrangement	No. of Outlets	Length Inches L	Approx. Ship Wt. Lbs.
ZM4-15	All Outlets A	4	7-1/8	2.60
ZM6-15		6	10-1/8	4.40
ZM8-15		8	13-1/8	6.20
ZM10-15		10	16-1/8	7.80
ZM12-15		12	19-1/8	9.50
ZM14-15		14	22-1/8	11.00
ZM16-15		16	25-1/8	13.00

For outlet combinations not listed call customer service.

MOLE™ TYPE ZMT

1500 AMPERES

MOLE™ Type ZMT— A compact pre-insulated junction for secondary network cables, with multiple outlets for cable clamping elements. Future expansion is provided for by an end outlet which can be joined to an additional MOLE™ by Type ZMS couplers.

Outlet Plugs — Mole outlet plugs that facilitate sealing outlets not being used are available separately, Types Z-P and K-P.

Insulating Sleeves — Taping operations for watertight joints are greatly simplified by the use of BURNDY® NOTAPE™ Sleeves Type CM or MOLE™ Insulating Sleeves Type Z-C are available separately.

Clamping Elements — Outlet Symbols A or B, refer to socket and nut Type Z-NR, and cone Type Z cable clamping elements accommodated. These must be ordered separately.

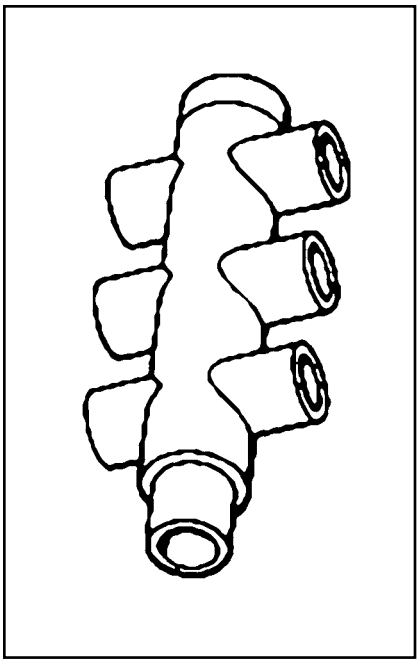

MOLE™ DIMENSIONS

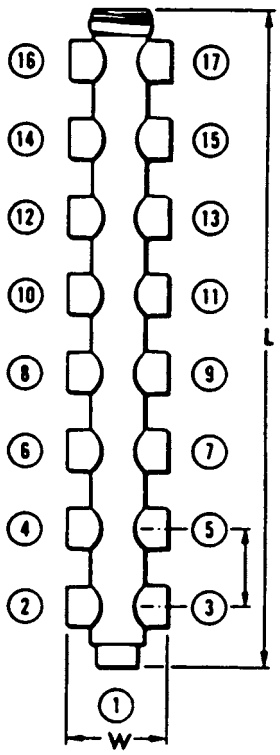

"W" dimension: 4½" Center to center distance between outlets: 3½"

OUTLET RANGE: "A" 6 Str. - 600 kcmil
"B" 2 Str. - 1000 kcmil

Catalog Number	Cable Outlet Arrangement	No. of Outlets	Length Inches L	Approx. Ship Wt. Lbs.
ZMT3-15	All Outlets A	3	5	1.30
ZMT5-15		5	8	3.00
ZMT7-15		7	11	4.50
ZMT9-15		9	14	6.20
ZMT11-15		11	17	7.90
ZMT13-15		13	20	9.70
ZMT15-15		15	23	12.00
ZMT17-15		17	26	13.00
ZMT3-15A3	Outlet #1 B All Other Outlets A	3	5	1.30
ZMT5-15A3		5	8	3.00
ZMT7-15A3		7	11	4.50
ZMT9-15A3		9	14	6.20
ZMT11-15A3		11	17	7.90
ZMT13-15A3		13	20	9.70
ZMT15-15A3		15	23	12.00
ZMT17-15A3		17	26	13.00

For outlet combinations not listed call customer service.

Blue highlighted items are industry standard and most frequently ordered.

MOLE™ TYPE ZME

1500 AMPERES

MOLE™ Type ZME — A compact pre-insulated junction for secondary network cables, with multiple outlets for cable clamping elements.

Outlet Plugs — Mole outlet plugs that facilitate sealing outlets not being used are Types Z-P and K-P, sold separately.

Insulating Sleeves — Taping operations for watertight joints are greatly simplified by the use of BURNDY® NOTAPE™ Sleeves Type CM or MOLE™ Insulating Sleeves Type Z-C are sold separately.

Clamping Elements— Outlet Symbols A or B, refer to socket and nut Type Z-NR, and cone Type Z cable clamping elements accommodated. These must be ordered separately.

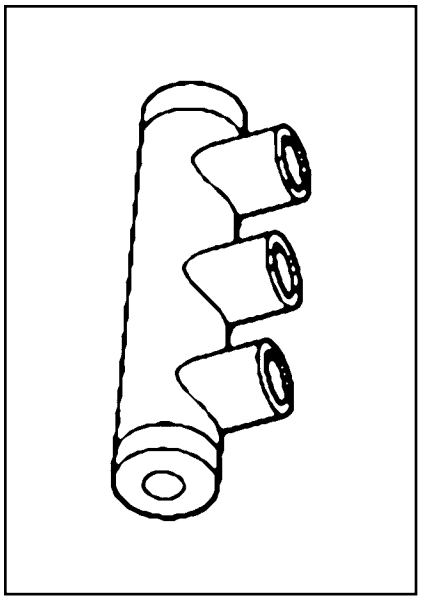

MOLE™ DIMENSIONS

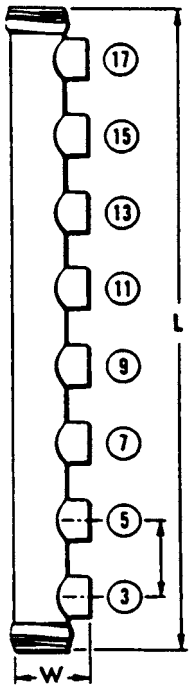

"W" dimension: 3"
Center to center distance between outlets: 3"

OUTLET RANGE: "A" 6 Str. - 600 kcmil

Catalog Number	Cable Outlet Arrangement	No. of Outlets	Length Inches L	Approx. Ship Wt. Lbs.
ZME2-15	All Outlets A	2	7-1/8	2.50
ZME3-15		3	10-1/8	4.40
ZME4-15		4	13-1/8	6.10
ZME5-15		5	16-1/8	7.70
ZME6-15		6	19-1/8	9.40
ZME7-15		7	22-1/8	11.00
ZME8-15		8	25-1/8	13.00

For outlet combinations not listed call customer service.

MOLE™ TYPE ZML

1500 AMPERES

MOLE™ Type ZML — A compact pre-insulated junction for secondary network cabes, with multiple outlets for cable clamping elements. Future expansion is provided for by an end outlet which can be joined to an additional MOLE™ by Type ZMS coupler.

Outlet Plugs — MOLE™ outlet plugs that facilitate sealing outlets not being used are available separately, Types Z-P and K-P.

Insulating Sleeves — Taping operations for watertight joints are greatly simplified by the use of BURNDY® NOTAPE™ Sleeves Type CM or MOLE™ Insulating Sleeves Type Z-C.

Clamping Elements — Outlet Symbols A or B, refer to socket and nut Type Z-NR, and cone Type Z cable clamping elements accommodated. These must be ordered separately.

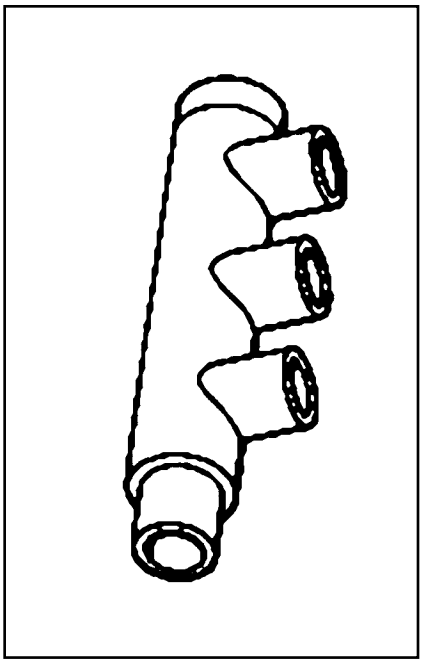

MOLE™ DIMENSIONS

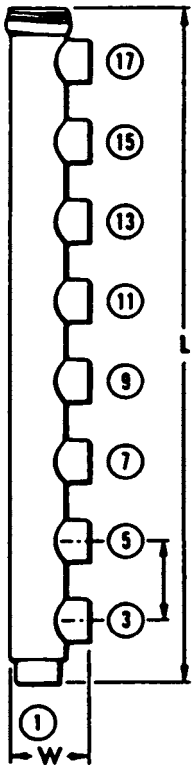

"W" dimension: 4" Center to center distance between outlets: 3³/₈"

OUTLET RANGE: "A" 6 Str. - 600 kcmil
"B" 2 Str. - 1000 kcmil

Catalog Number	Cable Outlet Arrangement	No. of Outlets	Length Inches L	Approx. Ship Wt. Lbs.
ZML2-15	All Outlets A	2	5	1.20
ZML3-15		3	8	3.00
ZML4-15		4	11	4.30
ZML5-15		5	14	5.90
ZML6-15		6	17	7.60
ZML7-15		7	20	9.40
ZML8-15		8	23	11.00
ZML9-15		9	26	13.00
ZML2-15A3	Outlet #1 B All Other Outlets A	2	5	1.20
ZML3-15A3		3	8	3.00
ZML4-15A3		4	11	4.30
ZML5-15A3		5	14	5.90
ZML6-15A3		6	17	7.60
ZML7-15A3		7	20	9.40
ZML0-15A3		8	23	11.00
ZML9-15A3		9	26	13.00

For outlet combinations not listed call customer service.

Blue highlighted items are industry standard and most frequently ordered.

MOLE™ TYPE ZMX

1500 AMPERES

MOLE™ Type ZMX — A compact pre-insulated junction for secondary network cables, with multiple outlets for cable clamping elements. Future expansion is provided for by an end outlet which can be joined to an additional MOLE™ by Type ZMS coupler.

Outlet Plugs — MOLE™ outlet plugs that facilitate sealing outlets not being used are available, Types Z-P and K-P, ordered separately.

Insulating Sleeves — Taping operations for watertight joints are greatly simplified by the use of BURNDY® NOTAPE™ Sleeves Type CM or MOLE™ Insulating Sleeves Type Z-C available separately.

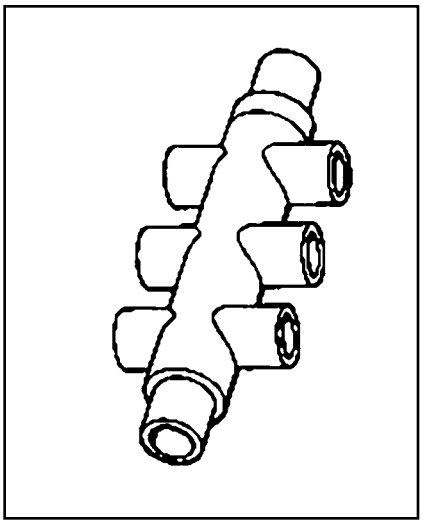

Clamping Elements — Outlet Symbols A or B, refer to socket and nut Type Z-NR, and cone Type Z cable clamping elements accommodated. These must be ordered separately.

MOLE™ DIMENSIONS

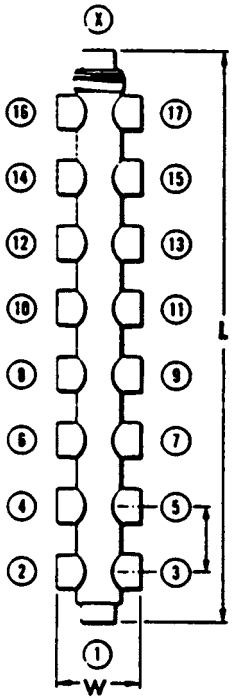

"W" dimension: 4½"
Center to center distance between outlets: 3½"

OUTLET RANGE: "A" 6 Str. - 600 kcmil
"B" 2 Str. - 1000 kcmil

Catalog Number	Cable Outlet Arrangement	No. of Outlets	Length Inches L	Approx. Ship Wt. Lbs.
ZMX4-15	All Outlets A	4	6.00	1.70
ZMX6-15		6	9.00	3.40
ZMX8-15		8	12.00	5.20
ZMX10-15		10	15.00	6.90
ZMX12-15		12	18.00	8.80
ZMX14-15		14	21.00	11.00
ZMX16-15		16	23.97	12.00
ZMX18-15		18	27.00	14.00
ZMX4-15A4	Outlets #1 and X B All other Outlets A	4	6.09	1.70
ZMX6-15A4		6	9.09	3.40
ZMX8-15A4		8	12.00	5.20
ZMX10-15A4		10	15.00	6.90
ZMX12-15A4		12	18.09	8.80
ZMX14-15A4		14	21.00	11.00
ZMX16-15A4		16	24.09	12.00
ZMX18-15A4		18	27.00	14.00
ZMX4-15A3	Outlets #1 and X B All other Outlets A	4	6.03	1.7.00
ZMX6-15A3		6	9.03	3.40
ZMX8-15A3		8	12.03	5.20
ZMX10-15A3		10	15.03	6.90
ZMX12-15A3		12	18.00	8.80
ZMX14-15A3		14	21.00	11.00
ZMX16-15A3		16	24.00	12.00
ZMX18-15A3		18	27.00	14.00

For outlet combinations not listed call customer service.

Blue highlighted items are industry standard and most frequently ordered.

MOLE™ TYPE ZMK

1500 AMPERES

MOLE™ Type ZMK — A compact pre-insulated junction for secondary network cables, with multiple outlets for cable clamping elements. Future expansion is provided for by an end outlet which can be joined to an additional MOLE™ by Type ZMS couplers.

Outlet Plugs — MOLE™ outlet plugs that facilitate sealing outlets not being used are available, Types Z-P and K-P, ordered separately.

Insulating Sleeves — Taping operations for watertight joints are greatly simplified by the use of BURNDY® NOTAPE™ Sleeves Type CM or MOLE™ Insulating Sleeves Type Z-C available separately.

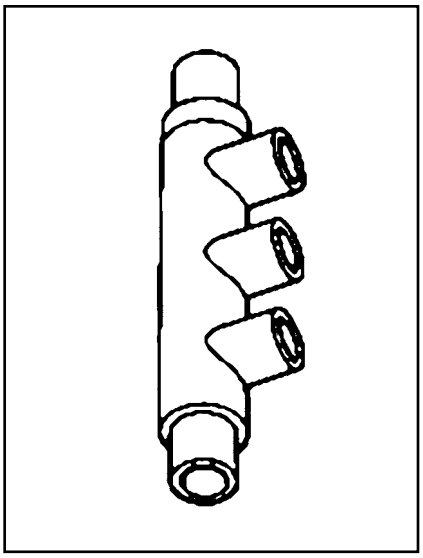

Clamping Elements — Outlet Symbols A or B, refer to socket and nut Type Z-NR, and cone Type Z cable clamping elements accommodated. These must be ordered separately.

MOLE™ DIMENSIONS

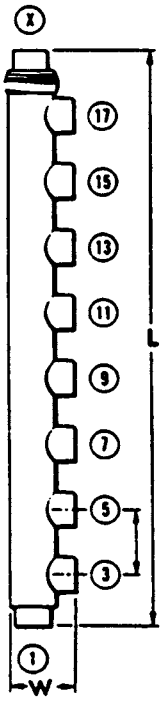

"W" dimension: 3 7/16" Center to center distance between outlets: 3 1/2"

OUTLET RANGE: **"A" 6 Str. - 600 kcmil**
"B" 2 Str. - 1000 kcmil

Catalog Number	Cable Outlet Arrangement	No. of Outlets	Length Inches L	Approx Ship Weight
ZMK4-15	All Outlets A	4	9	3.30
ZMK5-15		5	12	5.00
ZMK6-15		6	15	6.80
ZMK7-15		7	18	8.70
ZMK8-15		8	21	11.00
ZMK9-15		9	24	12.00
ZMK10-15		10	27	14.00
ZMK4-15A4	Outlets #1 and X B All Other Outlets A	4	9	3.30
ZMK5-15A4		5	12	5.00
ZMK6-15A4		6	15	6.80
ZMK7-15A4		7	18	8.70
ZMK8-15A4		8	21	11.00
ZMK9-15A4		9	24	12.00
ZMK10-15A4		10	27	14.00
ZMK4-15A3	Outlets #1 or X B All Other Outlets A	4	9	3.30
ZMK5-15A3		5	12	5.00
ZMK6-15A3		6	15	6.80
ZMK7-15A3		7	18	8.70
ZMK8-15A3		8	21	11.00
ZMK9-15A3		9	24	12.00
ZMK10-15A3		10	27	14.00

For outlet combinations not listed call customer service.

Blue highlighted items are industry standard and most frequently ordered.

MOLE™ TYPE ZM

2000-2500 AMPERES

MOLE™ Type ZM — A compact pre-insulated junction for secondary network cables, with multiple outlets for cable clamping elements.

Outlet Plugs — MOLE™ outlet plugs that facilitate sealing outlets not being used are available, Types Z-P and K-P, ordered separately.

Insulating Sleeves — Taping operations for watertight joints are greatly simplified by the use of BURNDY® NOTAPE™ Sleeves Type CM or MOLE™ Insulating Sleeves Type Z-C available separately.

Clamping Elements — Outlet Symbols A or B, refer to socket and nut Type Z-NR, and cone Type Z cable clamping elements accommodated. These must be ordered separately.

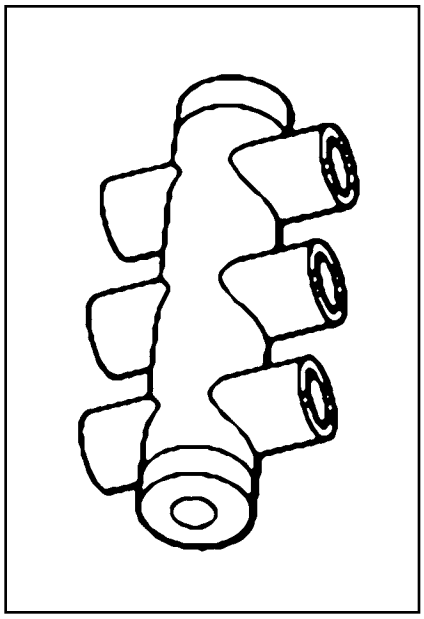

OUTLET RANGE: "A" 6 Str. - 600 kcmil
"B" 2 Str. - 1000 kcmil

Catalog Number	Cable Outlet Arrangement	No. of Outlets	Length Inches L	Approx. Ship Wt. Lbs.
ZM4-25	All Outlets A	4	8	4.40
ZM6-25		6	11-1/2	7.00
ZM8-25		8	15	9.70
ZM10-25		10	18-1/2	13.00
ZM12-25		12	22	14.00
ZM14-25		14	25-1/2	15.00
ZM16-25		16	29	18.00
ZM4-25B	All Outlets B	4	8	4.40
ZM6-25B		6	11-1/2	7.00
ZM8-25B		8	15	9.70
ZM10-25B		10	18-1/2	13.00
ZM12-25B		12	22	14.00
ZM14-25B		14	25-1/2	15.00
ZM16-25B		16	29	18.00

For outlet combinations not listed call customer service.

MOLE™ DIMENSIONS

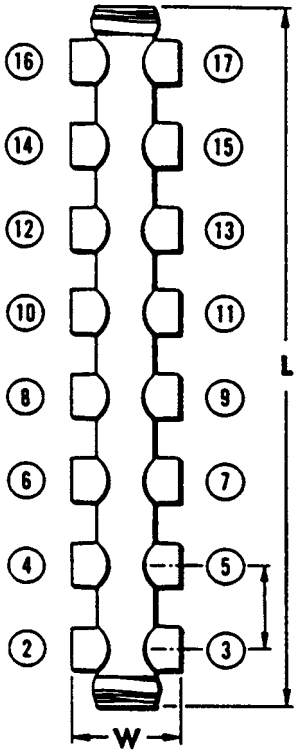

"W" dimension: 4 1/8"
Center to center distance between outlets: 3"

MOLE™ TYPE ZMT

2000-2500 AMPERES

MOLE™ Type ZMT — A compact pre-insulated junction for secondary network cables, with multiple outlets for cable clamping elements. Future expansion is provided for by an end outlet which can be joined to an additional MOLE™ by Type ZMS couplers.

Outlet Plugs — Mole outlet plugs that facilitate sealing outlets not being used are available separately, Types Z-P and K-P.

Insulating Sleeves — Taping operations for watertight joints are greatly simplified by the use of BURNDY® NOTAPE™ Sleeves Type CM or MOLE™ Insulating Sleeves Type Z-C are sold separately.

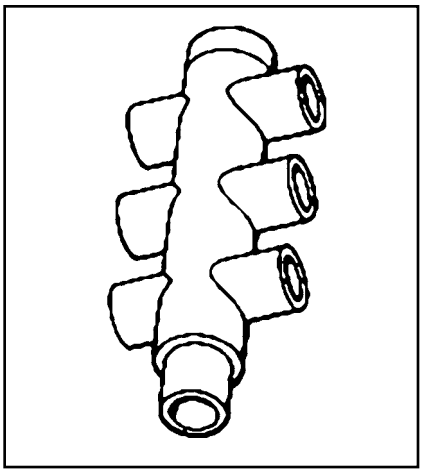

Clamping Elements — Outlet Symbols A or B, refer to socket and nut Type Z-NR, and cone Type Z cable clamping elements accommodated. These must be ordered separately.

OUTLET RANGE: **"A" 6 Str. - 600 kcmil**
"B" 2 Str. - 1000 kcmil

Catalog Number	Cable Outlet Arrangement	No. of Outlets	Length Inches L	Approx. Ship Wt. Lbs.
ZMT3-25	All Outlets A	3	5-1/2	1.90
ZMT5-25		5	9	5.80
ZMT7-25		7	12-1/2	8.00
ZMT9-25		9	16	12.00
ZMT11-25		11	19-1/2	14.00
ZMT13-25		13	23	17.00
ZMT15-25		15	26-1/2	18.00
ZMT17-25		17	30	19.00
ZMT3-25A3	Outlet #1 B All Other Outlets A	3	5-1/2	1.90
ZMT5-25A3		5	9	5.80
ZMT7-25A3		7	12-1/2	8.00
ZMT9-25A3		9	16	12.00
ZMT11-25A3		11	19-1/2	14.00
ZMT13-25A3		13	23	17.00
ZMT15-25A3		15	26-1/2	18.00
ZMT17-25A3		17	30	19.00
ZMT3-25B12	Outlet #1 A All Other Outlets B	3	5-1/2	1.90
ZMT5-25B12		5	9	5.80
ZMT7-25B12		7	12-1/2	8.00
ZMT9-25B12		9	16	12.00
ZMT11-25B12		11	19-1/2	14.00
ZMT13-25B12		13	23	17.00
ZMT15-25B12		15	26-1/2	18.00
ZMT17-25B12		17	30	19.00
ZMT3-258	All Outlets B	3	5-1/2	1.90
ZMT5-25B		5	9	5.80
ZMT7-25B		7	12-1/2	8.00
ZMT9-25B		9	16	12.00
ZMT11-25B		11	19-1/2	14.00
ZMT13-25B		13	23	17.00
ZMT15-25B		15	26-1/2	18.00
ZMT17-25B		17	30	19.00

For outlet combinations not listed call customer service.

MOLE™ DIMENSIONS

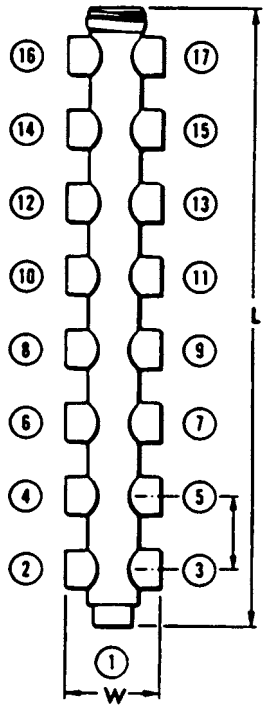

"W" dimension: 4½"
Center to center distance between outlets: 3½"

Blue highlighted items are industry standard and most frequently ordered.

MOLE™ TYPE ZME

2000-2500 AMPERES

MOLE™ Type ZME — A compact pre-insulated junction for secondary network cables, with multiple outlets for cable clamping elements.

Outlet Plugs — Mole outlet plugs that facilitate sealing outlets not being used are available separately, Types Z-P and K-P.

Insulating Sleeves — Taping operations for watertight joints are greatly simplified by the use of BURNDY® NOTAPE™ Sleeves Type CM or MOLE™ Insulating Sleeves Type Z-C, sold separately.

Clamping Elements — Outlet Symbols A or B, refer to socket and nut Type Z-NR, and cone Type Z cable clamping elements accommodated. These must be ordered separately.

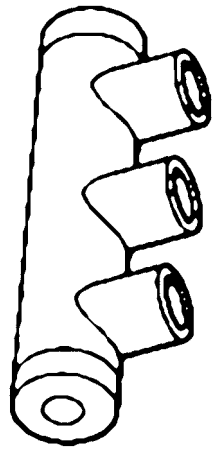

OUTLET RANGE: **"A" 6 Str. - 600 kcmil**
"B" 2 Str. - 1000 kcmil

Catalog Number	Cable Outlet Arrangement	No. of Outlets	Length Inches L	Approx. Ship Wt. Lbs.
ZME2-25	All Outlets A	2	8	4.30
ZME3-25		3	11-1/2	6.90
ZME4-25		4	15	9.50
ZME5-25		5	18-1/2	12.00
ZME6-25		6	22	14.00
ZME7-25		7	25-1/2	15.00
ZME8-25		8	29	17.00
ZME2-25B	All Outlets B	2	8	4.30
ZME3-25B		3	11-1/2	6.90
ZME4-25B		4	15	9.50
ZME5-25B		5	18-1/2	12.00
ZME6-25B		6	22	14.00
ZME7-25B		7	25-1/2	15.00
ZME8-25B		8	29	17.00

For outlet combinations not listed call customer service.

MOLE™ DIMENSIONS

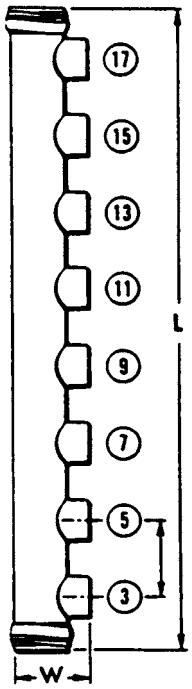

"W" dimension: 3"
Center to center distance between outlets: 3"

MOLE™ TYPE ZML

2000-2500 AMPERES

MOLE™ Type ZML — A compact pre-insulated junction for secondary network cabes, with multiple outlets for cable clamping elements. Future expansion is provided for by an end outlet which can be joined to an additional MOLE™ by Type ZMS coupler.

Outlet Plugs — MOLE™ outlet plugs that facilitate sealing outlets not being used are available seaparately, Types Z-P and K-P.

Insulating Sleeves — Taping operations for watertight joints are greatly simplified by the use of BURNDY® NOTAPE™ Sleeves Type CM or MOLE™ Insulating Sleeves Type Z-C, sold separately.

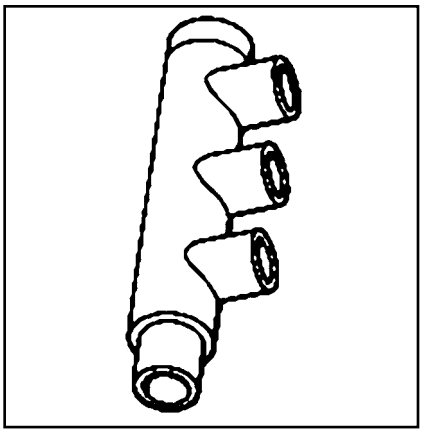

Clamping Elements — Outlet Symbols A or B, refer to socket and nut Type Z-NR, and cone Type Z cable clamping elements accommodated. These must be ordered separately.

MOLE™ DIMENSIONS

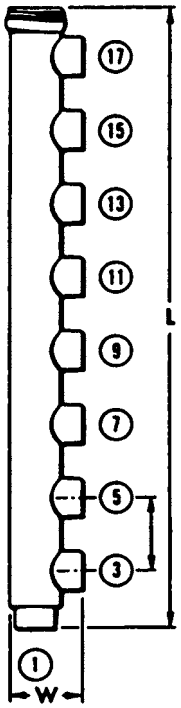

"W" dimension: 4" Center to center distance between outlets: 3³/₈"

OUTLET RANGE: "A" 6 Str. - 600 kcmil
"B" 2 Str. - 1000 kcmil

Catalog Number	Cable Outlet Arrangement	No. of Outlets	Length Inches L	Approx Ship Wt. Lbs.
ZML2-25	All Outlets A	2	5-1/2	1.80
ZML3-25		3	9	5.80
ZML4-25		4	12-1/2	7.90
ZML5-25		5	16	12.00
ZML6-25		6	19-1/2	14.00
ZML7-25		7	23	16.00
ZML8-25		8	26-1/2	17.00
ZML9-25		9	30	19.00
ZML2-25A3	Outlet #1 B All Other Outlets A	2	5-1/2	1.80
ZML3-25A3		3	9	5.80
ZML4-25A3		4	12-1/2	7.90
ZML5-25A3		5	16	12.00
ZML6-25A3		6	19-1/2	14.00
ZML7-25A3		7	23	16.00
ZML8-25A3		8	26-1/2	17.00
ZML9-25A3		9	30	19.00
ZML2-25B12	Outlet #1 A All Others Outlets B	2	5-1/2	1.80
ZML3-25B12		3	9	5.80
ZML4-25B12		4	12-1/2	7.90
ZML5-25B12		5	16	12.00
ZML6-25B12		6	19-1/2	14.00
ZML7-25B12		7	23	16.00
ZML8-25B12		8	26-1/2	17.00
ZML9-25B12		9	30	19.00
ZML2-25B	All Outlets B	2	5-1/2	1.80
ZML3-25B		3	9	5.80
ZML4-25B		4	12-1/2	7.90
ZML5-25B		5	16	12.00
ZML6-25B		6	19-1/2	14.00
ZML7-25B		7	23	16.00
ZML8-25B		8	26-1/2	17.00
ZML9-25B		9	30	19.00

For outlet combinations not listed call customer service.

Blue highlighted items are industry standard and most frequently ordered.

MOLE™ TYPE ZMX

2000-2500 AMPERES

MOLE™ Type ZMX — A compact pre-insulated junction for secondary network cables, with multiple outlets for cable clamping elements. Future expansion is provided for by an end outlet which can be joined to an additional MOLE™ by Type ZMS coupler.

Outlet Plugs — MOLE™ outlet plugs that facilitate sealing outlets not being used are available separately, Types Z-P and K-P.

Insulating Sleeves — Taping operations for watertight joints are greatly simplified by the use of BURNDY® NOTAPE™ Sleeves Type CM or MOLE™ Insulating Sleeves Type Z-C, sold separately.

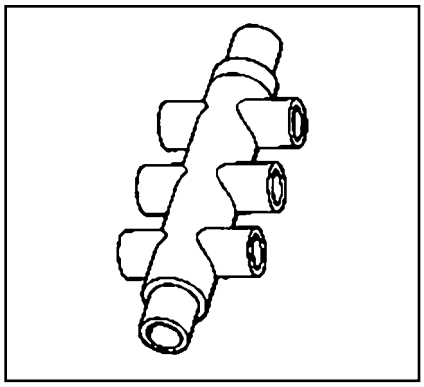

Clamping Elements — Outlet Symbols A or B, refer to socket and nut Type Z-NR, and cone Type Z cable clamping elements accommodated. These must be ordered separately.

OUTLET RANGE: "A" 6 Str. - 600 kcmil
"B" 2 Str. - 1000 kcmil

Catalog Number	Cable Outlet Arrangement	No. of Outlets	Length Inches L	Approx Ship Wt. Lbs.
ZMX4-25	All Outlets A	4	6-1/2	2.50
ZMX6-25		6	10	6.50
ZMX8-25		8	13-1/2	9.30
ZMX10-25		10	17	12.00
ZMX12-25		12	20-1/2	15.00
ZMX14-25		14	24	17.00
ZMX16-25		16	27-1/2	18.00
ZMX18-25		18	31	19.00
ZMX4-25A4	Outlet #1 and X B; All Other Outlets A	4	6-1/2	2.50
ZMX6-25A4		6	10	6.50
ZMX8-25A4		8	13-1/2	9.30
ZMX10-25A4		10	17	12.00
ZMX12-25A4		12	20-1/2	15.00
ZMX14-25A4		14	24	17.00
ZMX16-25A4		16	27-1/2	18.00
ZMX18-25A4		18	31	19.00
ZMX4-25B12	Outlet #1 A; All Other Outlets B	4	6-1/2	2.50
ZMX6-25B12		6	10	6.50
ZMX8-25B12		8	13-1/2	9.30
ZMX10-25B12		10	17	12.00
ZMX12-25B12		12	20-1/2	15.00
ZMX14-25B12		14	24	17.00
ZMX16-25B12		16	27-1/2	18.00
ZMX18-25B12		18	31	19.00
ZMX4-25B	All Outlets B	4	6-1/2	2.50
ZMX6-25B		6	10	6.50
ZMX8-25B		8	13-1/2	9.30
ZMX10-25B		10	17	12.00
ZMX12-25B		12	20-1/2	15.00
ZMX14-25B		14	24	17.00
ZMX16-25B		16	27-1/2	18.00
ZMX18-25B		18	31	19.00

For outlet combinations not listed call customer service.

Blue highlighted items are industry standard and most frequently ordered.

MOLE™ DIMENSIONS

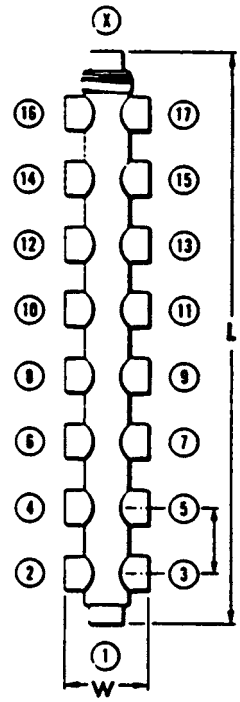

"W" dimension: 4½" Center to center distance between outlets: 3½"

MOLE™ TYPE ZMK

2000-2500 AMPERES

MOLE™ Type ZMK — A compact pre-insulated junction for secondary network cables, with multiple outlets for cable clamping elements. Future expansion is provided for by an end outlet which can be joined to an additional MOLE™ by Type ZMS couplers.

Outlet Plugs — MOLE™ outlet plugs that facilitate sealing outlets not being used are available separately, Types Z-P and K-P.

Insulating Sleeves — Taping operations for watertight joints are greatly simplified by the use of BURNDY® NOTAPE™ Sleeves Type CM or MOLE™ Insulating Sleeves Type Z-C, sold separately.

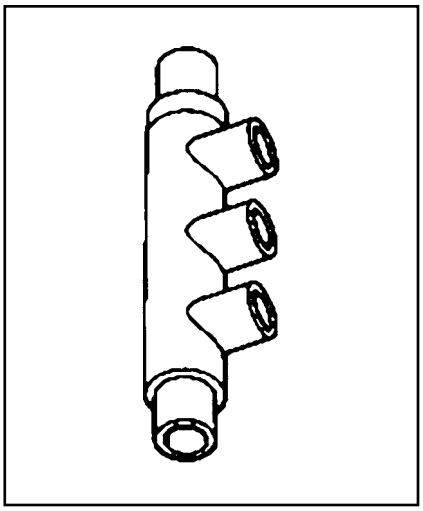

Clamping Elements — Outlet Symbols A or B, refer to socket and nut Type Z-NR, and cone Type Z cable clamping elements accommodated. These must be ordered separately.

MOLE™ DIMENSIONS

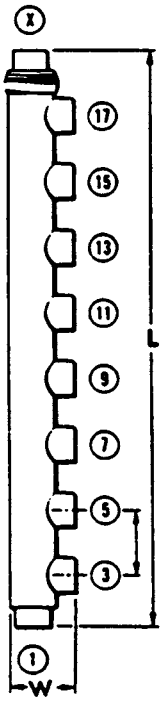

"W" dimension: 3 7/16"
Center to center distance between outlets: 3 1/2"

OUTLET RANGE: "A" 6 Str. - 600 kcmil
"B" 2 Str. - 1000 kcmil

Catalog Number	Cable Outlet Arrangement	No. of Outlets	Length Inches L	Approx. Ship Wt. Lbs.
ZMK4-25	All Outlets A	4	10	6.30
ZMK5-25		5	13-1/2	9.10
ZMK6-25		6	17	12.00
ZMK7-25		7	20-1/2	15.00
ZMK8-25		8	24	17.00
ZMK9-25		9	27-1/2	18.00
ZMK10-25		10	31	19.00
ZMK4-25A4	Outlet #1 and X B; All Other Outlets A	4	10	6.30
ZMK5-25A4		5	13-1/2	9.10
ZMK6-25A4		6	17	12.00
ZMK7-25A4		7	20-1/2	15.00
ZMK8-25A4		8	24	17.00
ZMK9-25A4		9	27-1/2	18.00
ZMK10-25A4		10	31	19.00
ZMK4-25B12	Outlet #1 A; All Other Outlets B	4	10	6.30
ZMK5-25B12		5	13-1/2	9.10
ZMK6-25B12		6	17	12.00
ZMK7-25B12		7	20-1/2	15.00
ZMK8-25B12		8	24	17.00
ZMK9-25B12		9	27-1/2	18.00
ZMK10-25B12		10	31	19.00
ZMK4-25B	All Outlets B	4	10	6.30
ZMK5-25B		5	13-1/2	9.10
ZMK6-25B		6	17	12.00
ZMK7-25B		7	20-1/2	15.00
ZMK8-25B		8	24	17.00
ZMK9-25B		9	27-1/2	18.00
ZMK10-25B		10	31	19.00

For outlet combinations not listed call customer service.

Blue highlighted items are industry standard and most frequently ordered.

MOLE™ TYPE ZM

3000 AMPERES

MOLE™ Type ZM — A compact pre-insulated junction for secondary network cables,with multiple outlets for cable clamping elements.

Outlet Plugs — MOLE™ outlet plugs that facilitate sealing outlets not being used are available separately, Types Z-P and K-P.

Insulating Sleeves — Taping operations for watertight joints are greatly simplified by the use of BURNDY® NOTAPE™ Sleeves Type CM or MOLE™ Insulating Sleeves Type Z-C, sold separately.

Clamping Elements — Outlet Symbols A or B, refer to socket and nut Type Z-NR, and cone Type Z cable clamping elements accommodated. These must be ordered separately.

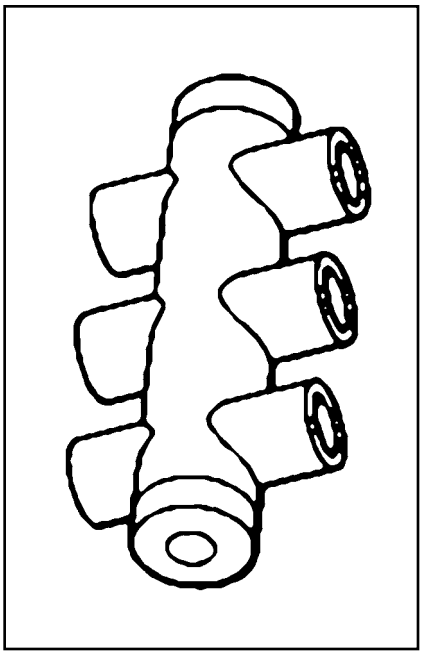

MOLE™ DIMENSIONS

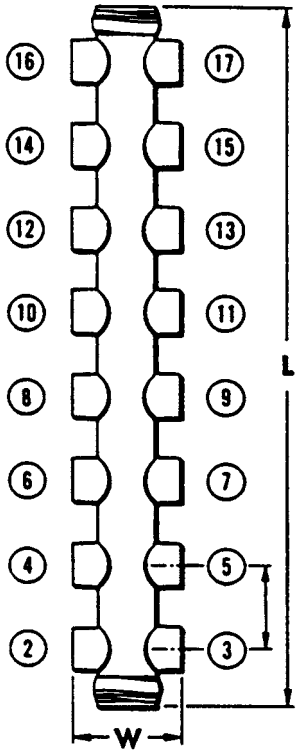

"W" dimension: 4 1/8"
Center to center distance between outlets: 3"

OUTLET RANGE: **"A" 6 Str. - 600 kcmil**
"B" 2 Str. - 1000 kcmil

Catalog Number	Cable Outlet Arrangement	No. of Outlets	Length Inches L	Approx. Ship Wt. Lbs.
ZM4-30	All Outlets A	4	6-15/16	6.80
ZM6-30		6	10-5/16	11.00
ZM8-30		8	13-11/16	15.00
ZM10-30		10	17-1/16	20.00
ZM12-30		12	20-7/16	24.00
ZM14-30		14	23-13/16	28.00
ZM16-30		16	27-3/16	33.00
ZM4-30B	All Outlets B	4	6-15/16	6.80
ZM6-30B		6	10-5/16	11.00
ZM8-30B		8	13-11/16	15.00
ZM10-30B		10	17-1/16	20.00
ZM12-30B		12	20-7/16	24.00
ZM14-30B		14	23-13/16	28.00
ZM16-30B		16	27-3/16	33.00

For outlet combinations not listed call customer service.

MOLE™ TYPE ZMT

3000 AMPERES

MOLE™ Type ZMT— A compact pre-insulated junction for secondary network cables, with multiple outlets for cable clamping elements. Future expansion is provided for by an end outlet which can be joined to an additional MOLE™ by Type ZMS couplers.

Outlet Plugs — Mole outlet plugs that facilitate sealing outlets not being used are available separately, Types Z-P and K-P.

Insulating Sleeves — Taping operations for watertight joints are greatly simplified by the use of BURNDY® NOTAPE™ Sleeves Type CM or MOLE™ Insulating Sleeves Type Z-C, sold separately.

Clamping Elements — Outlet Symbols A or B, refer to socket and nut Type Z-NR, and cone Type Z cable clamping elements accommodated. These must be ordered separately.

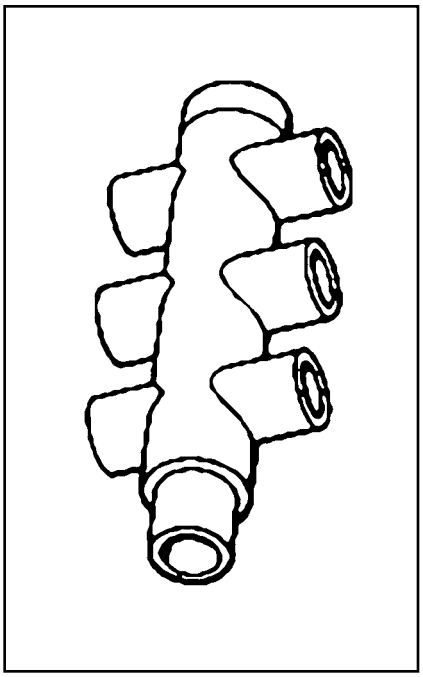

MOLE™ DIMENSIONS

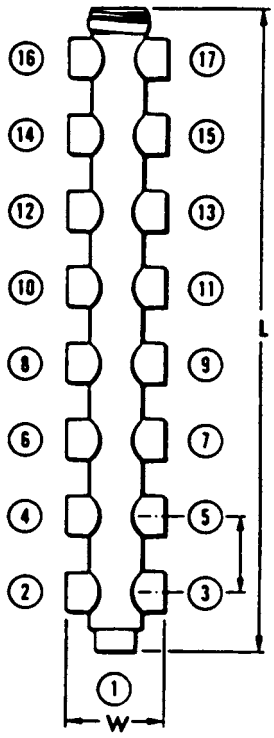

"W" dimension: 4½" Center to center distance between outlets: 3½"

OUTLET RANGE: "A" 6 Str. - 600 kcmil
"B" 2 Str. - 1000 kcmil

Catalog Number	Cable Outlet Arrangement	No. of Outlets	Length Inches L	Approx. Ship Wt. Lbs.
ZMT3-30	All Outlets A	3	5-1/2	2.80
ZMT5-30		5	9-1/8	7.40
ZMT7-30		7	12-1/2	12.00
ZMT11-30		11	19-1/4	21.00
ZMT13-30		13	22-5/8	26.00
ZMT15-30		15	26	30.00
ZMT17-30		17	29-3/8	35.00
ZMT3-30B	All Outlets B	3	5-1/2	2.80
ZMT5-30B		5	9-1/8	7.40
ZMT7-30B		7	12-1/2	12.00
ZMT9-30B		9	15-7/8	16.00
ZMT11-30B		11	19-1/4	21.00
ZMT13-30B		13	22-5/8	26.00
ZMT15-30B		15	26	30.00
ZMT17-30B		17	29-3/8	35.00

For outlet combinations not listed call customer service.

MOLE™ TYPE ZME

3000 AMPERES

MOLE™ Type ZME — A compact pre-insulated junction for secondary network cables, with multiple outlets for cable clamping elements.

Outlet Plugs — Mole outlet plugs that facilitate sealing outlets not being used are available separately, Types Z-P and K-P.

Insulating Sleeves — Taping operations for watertight joints are greatly simplified by the use of BURNDY® NOTAPE™ Sleeves Type CM or MOLE™ Insulating Sleeves Type Z-C, sold separately.

Clamping Elements — Outlet Symbols A or B, refer to socket and nut Type Z-NR, and cone Type Z cable clamping elements accommodated. These must be ordered separately.

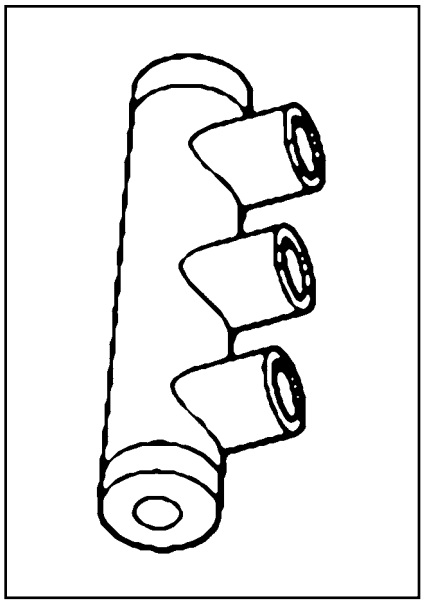

OUTLET RANGE: **"A" 6 Str. - 600 kcmil**
"B" 2 Str. - 1000 kcmil

Catalog Number	Cable Outlet Arrangement	No. of Outlets	Length Inches L	Approx. Ship Wt. Lbs.
ZME230	All Outlets A	2	6-15/16	6.50
ZME330		3	10-5/16	11.00
ZME430		4	13-11/16	15.00
ZME530		5	17-1/16	19.00
ZME630		6	20-7/16	24.00
ZME730		7	23-13/16	28.00
ZME830		8	27-3/16	32.00
ZME230B	All Outlets B	2	6-15/16	6.80
ZME330B		3	10-5/16	11.00
ZME430B		4	13-11/16	15.00
ZME530B		5	17-1/16	19.00
ZME630B		6	20-7/16	24.00
ZME730B		7	23-13/16	28.00
ZME830B		8	27-3/16	32.00

For outlet combinations not listed call customer service.

MOLE™ DIMENSIONS

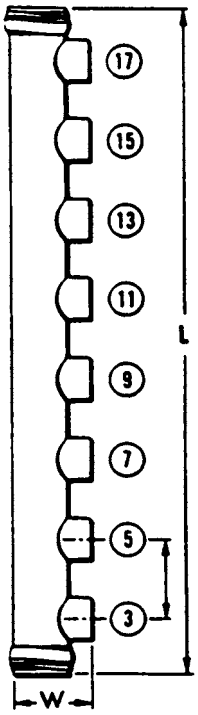

"W" dimension: 3"
Center to center distance between outlets: 3"

MOLE™ TYPE ZML

3000 AMPERES

MOLE™ Type ZML — A compact pre-insulated junction for secondary network cabes, with multiple outlets for cable clamping elements. Future expansion is provided for by an end outlet which can be joined to an additional MOLE™ by Type ZMS coupler.

Outlet Plugs — MOLE™ outlet plugs that facilitate sealing outlets not being used are available separately, Types Z-P and K-P.

Insulating Sleeves — Taping operations for watertight joints are greatly simplified by the use of BURNDY® NOTAPE™ Sleeves Type CM or MOLE™ Insulating Sleeves Type Z-C, sold separately.

Clamping Elements — Outlet Symbols A or B, refer to socket and nut Type Z-NR, and cone Type Z cable clamping elements accommodated. These must be ordered separately.

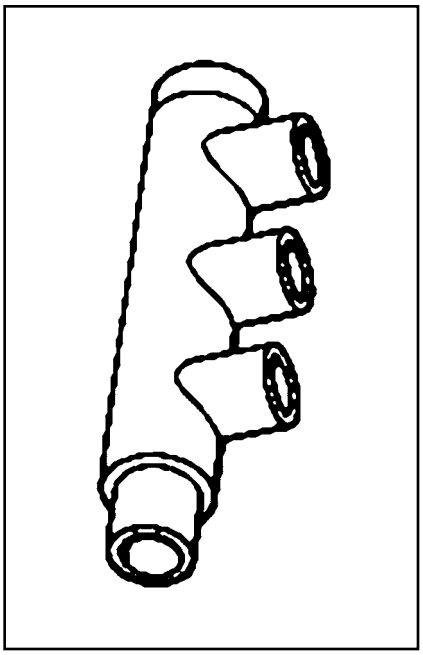

OUTLET RANGE: **"A" 6 Str. - 600 kcmil**
"B" 2 Str. - 1000 kcmil

Catalog Number	Cable Outlet Arrangement	No. of Outlets	Length Inches L	Approx. Ship Wt. Lbs.
ZML2-30	All Outlets A	2	5.50	2.70
ZML3-30		3	9.13	7.30
ZML4-30		4	12.50	12.00
ZML5-30		5	15.88	16.00
ZML6-30		6	19.25	21.00
ZML7-30		7	22.63	25.00
ZML8-30		8	26.00	30.00
ZML9-30		9	29.38	35.00
ZML2-30B	All Outlets B	2	5.50	2.70
ZML3-30B		3	9.13	7.30
ZML4-30B		4	12.50	12.00
ZML5-30B		5	15.88	16.00
ZML6-30B		6	19.25	21.00
ZML7-30B		7	22.63	25.00
ZML8-30B		8	26.00	30.00
ZML9-30B		9	29.38	35.00

For outlet combinations not listed call customer service.

MOLE™ DIMENSIONS

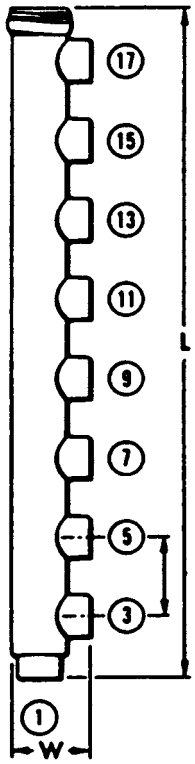

"W" dimension: 4"
Center to center distance between outlets: 3 3/8"

Blue highlighted items are industry standard and most frequently ordered.

MOLE™ TYPE ZMX

3000 AMPERES

MOLE™ Type ZMX — A compact pre-insulated junction for secondary network cables, with multiple outlets for cable clamping elements. Future expansion is provided for by an end outlet which can be joined to an additional MOLE™ by Type ZMS coupler.

Outlet Plugs — MOLE™ outlet plugs that facilitate sealing outlets not being used are available separately, Types Z-P and K-P.

Insulating Sleeves — Taping operations for watertight joints are greatly simplified by the use of BURNDY® NOTAPE™ Sleeves Type CM or MOLE™ Insulating Sleeves Type Z-C, sold separately.

Clamping Elements — Outlet Symbols A or B, refer to socket and nut Type Z-NR, and cone Type Z cable clamping elements accommodated. These must be ordered separately.

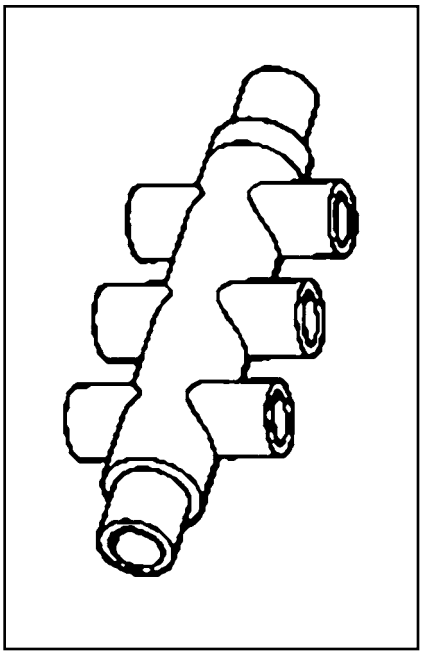

MOLE™ DIMENSIONS

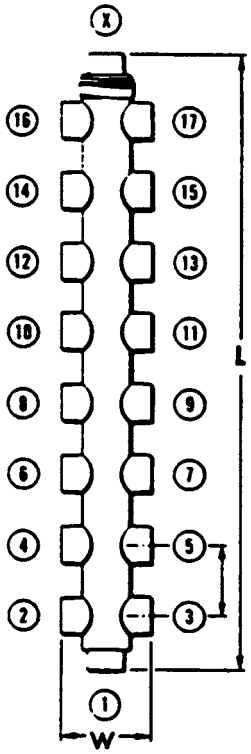

"W" dimension: 4½"
Center to center distance between outlets: 3½"

OUTLET RANGE: **"A" 6 Str. - 600 kcmil**
"B" 2 Str. - 1000 kcmil

Catalog Number	Cable Outlet Arrangement	No. of Outlets	Length Inches L	Approx. Ship Wt. Lbs.
ZMX4-30	All Outlets A	4	6.50	3.90
ZMX6-30		6	10.13	8.90
ZMX8-30		8	13.50	13.00
ZMX10-30		10	16.88	18.00
ZMX12-30		12	20.25	23.00
ZMX14-30		14	23.64	27.00
ZMX16-30		16	27.02	31.00
ZMX18-30		18	30.40	35.00
ZMX4-30B	All Outlets B	4	6.50	3.90
ZMX6-30B		6	10.13	8.90
ZMX8-30B		8	13.50	13.00
ZMX10-30B		10	16.88	18.00
ZMX14-30B		14	23.64	27.00
ZMX18-30B		18	30.40	35.00

For outlet combinations not listed call customer service.

Blue highlighted items are industry standard and most frequently ordered.

MOLE™ TYPE ZMK

3000 AMPERES

MOLE™ Type ZMK — A compact pre-insulated junction for secondary network cables, with multiple outlets for cable clamping elements. Future expansion is provided for by an end outlet which can be joined to an additional MOLE™ by Type ZMS couplers.

Outlet Plugs — MOLE™ outlet plugs that facilitate sealing outlets not being used are available separately, Types Z-P and K-P.

Insulating Sleeves — Taping operations for watertight joints are greatly simplified by the use of BURNDY® NOTAPE™ Sleeves Type CM or MOLE™ Insulating Sleeves Type Z-C, ordered separately.

Clamping Elements — Outlet Symbols A or B, refer to socket and nut Type Z-NR, and cone Type Z cable clamping elements accommodated. These must be ordered separately.

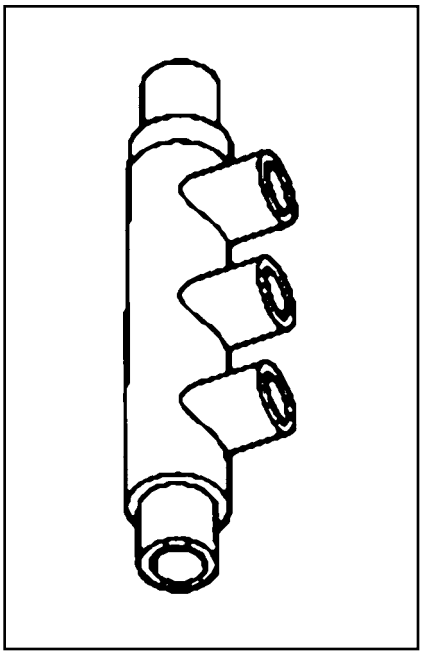

MOLE™ DIMENSIONS

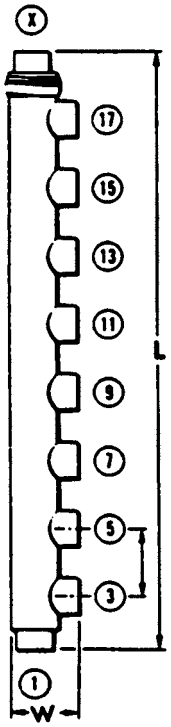

"W" dimension: 4"
Center to center distance between outlets: 3 3/8"

OUTLET RANGE: **"A" 6 Str. - 600 kcmil**
"B" 2 Str. - 1000 kcmil

Catalog Number	Cable Outlet Arrangement	No. of Outlets	Length Inches L	Approx. Ship Wt. Lbs.
ZMK430	All Outlets A	4	10-1/8	8.80
ZMK530		5	13-1/2	13.00
ZMK630		6	16-7/8	18.00
ZMK730		7	20-1/4	23.00
ZMK830		8	23-5/8	27.00
ZMK930		9	27	31.00
ZMK1030		10	30-3/8	35.00
ZMK430B	All Outlets B	4	10-1/4	8.80
ZMK530B		5	13-5/8	13.00
ZMK630B		6	17	18.00
ZMK730B		7	20-3/8	23.00
ZMK830B		8	23-3/4	27.00
ZMK1030B		10	30-1/2	35.00

For outlet combinations not listed call customer service.

TYPE ZMLDN

MOLE™ STUD CONNECTOR

For Connecting Copper
Cables to Network Protector

To terminate one or more cables at the studs of distribution transformers, network protectors or other apparatus. The body, except for the stud clamping element is completely insulated. A separate clamping cap over the stud is provided that permits easy removal of the MOLE™ Stud Connector. This permits work to be done on the Network Protector without unduly disturbing the cables.

Outlet Plugs — MOLE™ outlet plugs that facilitate sealing outlets not being used are available separately, Types Z-P and K-P.

Insulating Sleeves — Taping operations for watertight joints are greatly simplified by the use of BURNDY® NOTAPE™ Sleeves Type CM or MOLE™ Insulating Sleeves Type Z-C, ordered separately.

Clamping Elements — Outlet Symbols A or B, refer to socket and nut Type Z-NR, and cone Type Z cable clamping elements accommodated. These must be ordered separately.

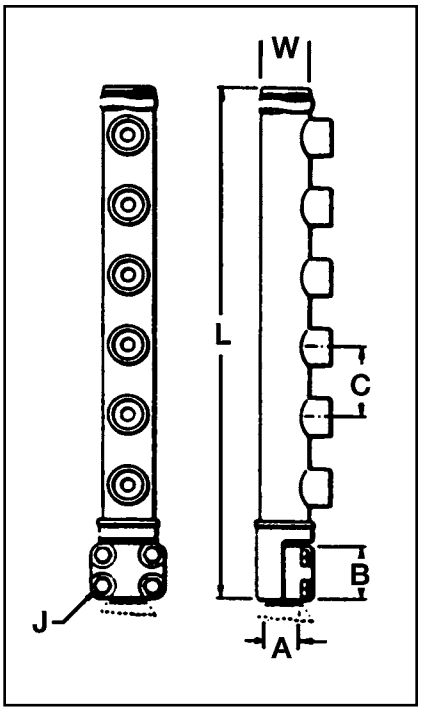

OUTLET RANGE: "A" 6 Str. - 600 kcmil
"B" 2 Str. - 1000 kcmil

Catalog Number	Ampere Capacity	Cable Outlet Arrangement	* No. of Outlets	A		Dimensions in Inches					Approx. Ship Wt. Lbs.
				Stud Dia.	Threads per Inch	B	C	J	L	W	
ZMLDN1-15	1500	All Outlets A	1	1-1/2	12	2-11/16	—	1/2	7-3/8	3	4.70
ZMLDN2-15			2	1-1/2	12	2-11/16	3	1/2	10-3/8	3	6.80
ZMLDN3-15			3	1-1/2	12	2-11/16	3	1/2	13-3/8	3	8.80
ZMLDN4-15			4	1-1/2	12	2-11/16	3	1/2	16-3/8	3	11.00
ZMLDN5-15			5	1-1/2	12	2-11/16	3	1/2	19-3/8	3	13.30
ZMLDN6-15			6	1-1/2	12	2-11/16	3	1/2	22-3/8	3	15.50
ZMLDN1-20	2000		1	1-1/2	12	2-11/16	—	1/2	7-7/8	3-7/16	8.50
ZMLDN2-20			2	1-1/2	12	2-11/16	3-1/2	1/2	11-3/8	3-7/16	12.00
ZMLDN3-20			3	1-1/2	12	2-11/16	3-1/2	1/2	14-7/8	3-7/16	14.00
ZMLDN4-20			4	1-1/2	12	2-11/16	3-1/2	1/2	18-3/8	3-7/16	17.00
ZMLDN5-20			5	1-1/2	12	2-11/16	3-1/2	1/2	21-7/8	3-7/16	20.00
ZMLDN6-20			6	1-1/2	12	2-11/16	3-1/2	1/2	25-3/8	3-7/16	23.00
ZMLDN1-20B		All Outlets B	1	1-1/2	12	2-11/16	—	1/2	7-7/8	3-7/16	8.50
ZMLDN2-20B			2	1-1/2	12	2-11/16	3-1/2	1/2	11-3/8	3-7/16	12.00
ZMLDN3-20B			3	1-1/2	12	2-11/16	3-1/2	1/2	14-7/8	3-7/16	14.00
ZMLDN4-20B			4	1-1/2	12	2-11/16	3-1/2	1/2	18-3/8	3-7/16	17.00
ZMLDN5-20B			5	1-1/2	12	2-11/16	3-1/2	1/2	21-7/8	3-7/16	20.00
ZMLDN6-20B			6	1-1/2	12	2-11/16	3-1/2	1/2	25-3/8	3-7/16	23.00

* Can be furnished with more than 6 outlets.

Blue highlighted items are industry standard and most frequently ordered.

TYPE ZMLDN

MOLE™ STUD CONNECTOR
(Continued)

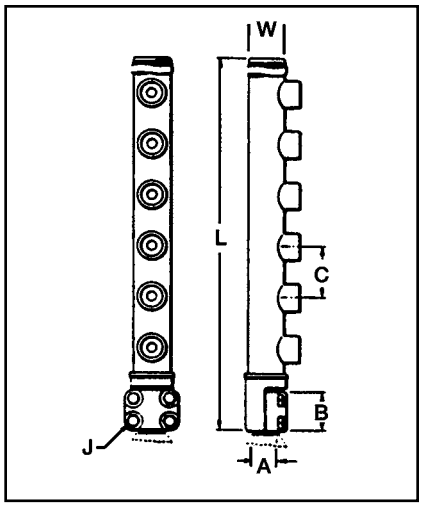

OUTLET RANGE: "A" 6 Str. - 600 kcmil
"B" 2 Str. - 1000 kcmil

Catalog Number	Ampere Capacity	Cable Outlet Arrangement	* No. of Outlets	A		Dimensions in Inches					Approx. Ship Wt. Lbs.
				Stud Dia.	Threads per Inch	B	C	J	L	W	
ZMLDN1-25	2500	All Outlets A	1	3	12	3-1/4	—	5/8	8-27/32	3-7/16	11.80
ZMLDN2-25			2	3	12	3-1/4	3-1/2	5/8	12-11/32	3-7/16	17.00
ZMLDN3-25			3	3	12	3-1/4	3-1/2	5/8	15-27/32	3-7/16	19.50
ZMLDN4-25			4	3	12	3-1/4	3-1/2	5/8	19-11/32	3-7/16	23.70
ZMLDN5-25			5	3	12	3-1/4	3-1/2	5/8	22-27/32	3-7/16	28.00
ZMLDN6-25			6	3	12	3-1/4	3-1/2	5/8	26-11/32	3-7/16	32.00
ZMLDN1-25B		All Outlets B	1	3	12	3-1/4	—	5/8	8-27/32	3-7/16	11.80
ZMLDN2-25B			2	3	12	3-1/4	3-1/2	5/8	12-11/32	3-7/16	17.00
ZMLDN3-25B			3	3	12	3-1/4	3-1/2	5/8	15-27/32	3-7/16	19.50
ZMLDN4-25B			4	3	12	3-1/4	3-1/2	5/8	19-11/32	3-7/16	23.70
ZMLDN5-25B			5	3	12	3-1/4	3-1/2	5/8	22-27/32	3-7/16	28.00
ZMLDN6-25B			6	3	12	3-1/4	3-1/2	5/8	26-11/32	3-7/16	32.00
ZMLDN1-30	3000	All Outlets A	1	3	12	3-1/4	—	5/8	7-5/8	4	11.50
ZMLDN2-30			2	3	12	3-1/4	3-3/8	5/8	11-1/4	4	16.80
ZMLDN3-30			3	3	12	3-1/4	3-3/8	5/8	14-5/8	4	19.00
ZMLDN4-30			4	3	12	3-1/4	3-3/8	5/8	18	4	23.00
ZMLDN5-30			5	3	12	3-1/4	3-3/8	5/8	21-3/8	4	27.00
ZMLDN6-30			6	3	12	3-1/4	3-3/8	5/8	24-3/4	4	31.00
ZMLDN1-30B		All Outlets B	1	3	12	3-1/4	—	5/8	7-5/8	4	11.50
ZMLDN2-30B			2	3	12	3-1/4	3-3/8	5/8	11-1/4	4	16.80
ZMLDN3-30B			3	3	12	3-1/4	3-3/8	5/8	14-5/8	4	19.00
ZMLDN4-30B			4	3	12	3-1/4	3-3/8	5/8	18	4	23.00
ZMLDN5-30B			5	3	12	3-1/4	3-3/8	5/8	21-3/8	4	27.00
ZMLDN6-30B			6	3	12	3-1/4	3-3/8	5/8	24-3/4	4	31.00

* Can be furnished with more than 6 outlets. For outlet combinations not listed call customer service.

Blue highlighted items are industry standard and most frequently ordered.

TYPE Z2MLDN

MOLE™ STUD CONNECTOR

For Connecting Copper Cables to Network Protector

To terminate two or more cables at the studs of distribution transformers, network protectors or other apparatus. The body, except for the stud clamping element is completely insulated. A separate clamping cap over the stud is provided that permits easy removal of the MOLE™ Stud Connector. This permits work to be done on the Network Protector without unduly disturbing the cables.

Outlet Plugs — MOLE™ outlet plugs that facilitate sealing outlets not being used are available separately, Types Z-P and K-P.

Insulating Sleeves — Taping operations for watertight joints are greatly simplified by the use of BURNDY® NOTAPE™ Sleeves Type CM or MOLE™ Insulating Sleeves Type Z-C, ordered separately.

Clamping Elements — Outlet Symbols A or B, refer to socket and nut Type Z-NR, and cone Type Z cable clamping elements accommodated. These must be ordered separately.

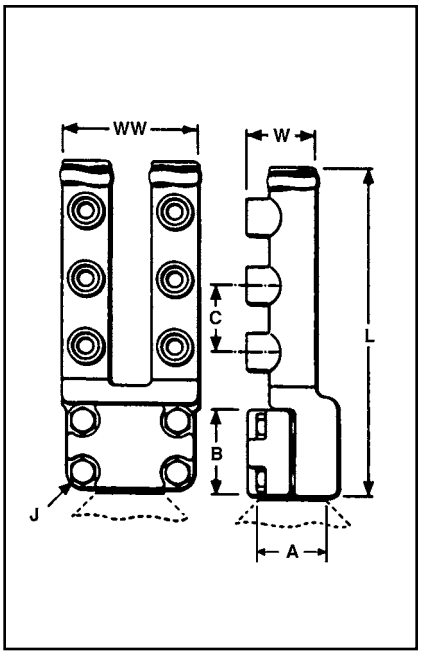

OUTLET RANGE: **"A" 6 Str. - 600 kcmil**
"B" 2 Str. - 1000 kcmil

Catalog Number	Ampere Capacity	Cable Outlet Arrangement	*No. of Outlets	A		Dimensions in Inches						Approx. Ship Wt. Lbs
				Stud Dia.	Threads per Inch	B	C	J	L	W	WW	
Z2MLDN2-20	2000 & Smaller	All Outlets A	2	1-1/2	12	2-11/16	—	1/2	8	3	5-3/16	5.80
Z2MLDN4-20			4	1-1/2	12	2-11/16	3	1/2	11	3	5-3/16	9.40
Z2MLDN6-20			6	1-1/2	12	2-11/16	3	1/2	14	3	5-3/16	13.20
Z2MLDN2-30	2500 & 3000	All Outlets A	2	3	12	3-1/4	—	5/8	9	3	6-1/2	7.30
Z2MLDN4-30			4	1-1/2	12	3-1/4	3	5/8	12	3	6-1/2	12.50
Z2MLDN6-30			6	3	12	3-1/4	3	5/8	15	3	6-1/2	16.30
Z2MLDN2-30B		All Outlets B	2	3	12	3-1/4	—	5/8	9	3-1/2	6-1/2	11.20
Z2MLDN4-30B			4	3	12	3-1/4	3-1/2	5/8	12-1/2	3-1/2	6-1/2	16.10
Z2MLDN6-30B			6	3	12	3-1/4	3-1/2	5/8	16	3-1/2	6-1/2	21.30

*Can be furnished with more than 6 outlets.For outlet combinations not listed call customer service.

TYPE ZMDN

MOLE™ STUD CONNECTOR

For Connecting Copper Cables to Network Protector

To terminate one or more cables at the studs of distribution transformers, network protectors or other apparatus. The body, except for the stud clamping element is completely insulated. A separate clamping cap over the stud is provided that permit easy removal of the MOLE™ Stud Connector. This permits work to be done on the Network Protector without unduly disturbing the cables.

Outlet Plugs — MOLE™ outlet plugs that facilitate sealing outlets not being used are available separately, Types Z-P and K-P.

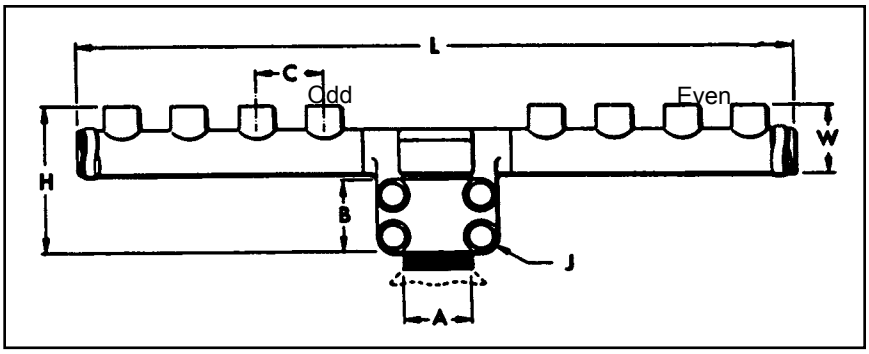

Insulating Sleeves — Taping operations for watertight joints are greatly simplified by the use of BURNDY® NOTAPE™ Sleeves Type CM or MOLE™ Insulating Sleeves Type Z-C, ordered separately.

Clamping Elements — Outlet Symbols A or B, refer to socket and nut Type Z-NR, and cone Type Z cable clamping elements accommodated. These must be ordered separately.

OUTLET RANGE: **"A" 6 Str. - 600 kcmil**
"B" 2 Str. - 1000 kcmil

Catalog Number	Ampere Capacity	Cable Outlet Arrangement	*No. of Outlets	A		Dimensions in Inches						Approx. Ship Wt. Lbs.
				Stud Dia.	Threads per Inch	B	C	J	H	L	W	
ZMDN3-20	2000 & Smaller	All Outlets A	3	1-1/2	12	2-11/16	3-1/2	1/2	8-1/16	11-1/2	3-7/16	14.50
ZMDN4-20			4	1-1/2	12	2-11/16	3-1/2	1/2	8-1/16	15	3-7/16	17.50
ZMDN5-20			5	1-1/2	12	2-11/16	3-1/2	1/2	8-1/16	18-1/2	3-7/16	20.50
ZMDN6-20			6	1-1/2	12	2-11/16	3-1/2	1/2	8-1/16	22	3-7/16	23.50
ZMDN3-20B		All Outlets B	3	1-1/2	12	2-11/16	3-1/2	1/2	8-1/16	11-1/2	3-7/16	14.50
ZMDN4-20B			4	1-1/2	12	2-11/16	3-1/2	1/2	8-1/16	15	3-7/16	17.50
ZMDN5-20B			5	1-1/2	12	2-11/16	3-1/2	1/2	8-1/16	18-1/2	3-7/16	20.50
ZMDN6-20B			6	1-1/2	12	2-11/16	3-1/2	1/2	8-1/16	22	3-7/16	23.50
ZMDN3-25	2000 Through 2500	All Outlets A	3	3	12	3-1/4	3-1/2	5/8	8-5/8	11-1/2	3-7/16	26.50
ZMDN4-25			4	3	12	3-1/4	3-1/2	5/8	8-5/8	15	3-7/16	20.50
ZMDN5-25			5	3	12	3-1/4	3-1/2	5/8	8-5/8	18-1/2	3-7/16	23.50
ZMDN6-25			6	3	12	3-1/4	3-1/2	5/8	8-5/8	22	3-7/16	26.50

*Can be furnished with more than 6 outlets. For outlet combinations not listed call customer service.
For connectors with an odd number of outlets the odd and even split of outlets will be as indicated in the diagram.

TYPE ZMTDN

MOLE™ STUD CONNECTOR

For Connecting Copper Cables to Network Protector

To terminate two or more cables at the studs of distribution transformers, network protectors or other apparatus. The body, except for the stud clamping element is completely insulated. A separate clamping cap over the stud is provided that permits easy removal of the MOLE™ Stud Connector. This permits work to be done on the Network Protector without unduly disturbing the cables.

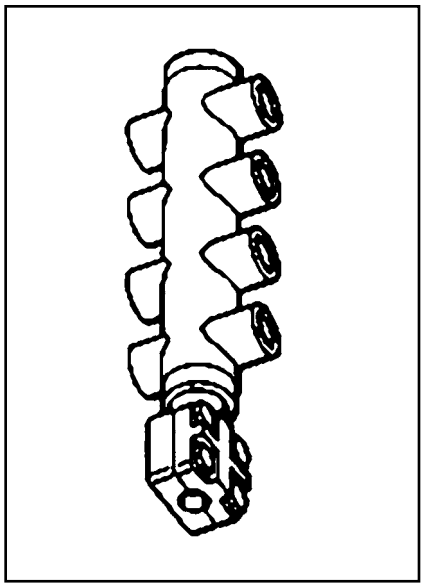

Catalog Number	Ampere Capacity	Number of Outlets	Cable Outlet Arrangement	Stud Dia.
ZMTDN815	1500	8	A	1.50"
ZMTDN1015	1500	10	A	1.50"
ZMTDN820	2000-2500	8	A	1.50"
ZMTDN81025	2000-2500	10	A	1.50"

TYPE Z-P

MOLE™ OUTLET PLUGS

These plugs facilitate sealing MOLE™ outlets not being used.

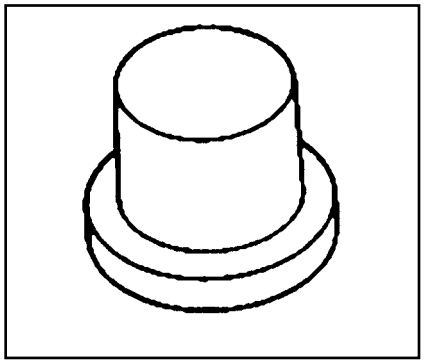

Catalog Number	Used On Outlet Size
Z29P	**A**
Z34P	**B**
Z40P	**C**

TYPE Z-NR

SOCKET AND NUT ASSEMBLY

Designed for use with BURNDY® MOLE. With the use of the proper compression cones, 14 sizes take a range of cables from No. 6 to 1000 kcmil. Their compact design lends them to easy effective taping. Insulating sleeves are available to keep taping to a minimum.

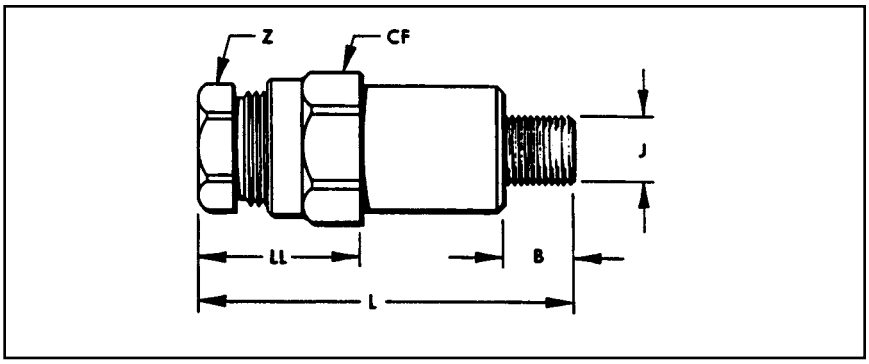

OUTLET RANGE: **"A" 6 Str. - 600 kcmil**
"B" 2 Str. - 1000 kcmil

Catalog Number	To be Used in MOLE™ Outlet Size	Maximum Cable Accommodated by Socket	Stud Size J	Dimensions in Inches					Approx. Ship Wt. Lbs.
				B	CF (Cross Flats)	L	LL	Z (Cross Flats)	
Z28NR	A	4/0 Str.	5/8-18	17/32	1-1/8	3-7/16	1-1/2	7/8	0.72
Z29NR		250 kcmil	5/8-18	17/32	1-3/16	3-9/16	1-5/8	15/16	0.76
Z30NR		300 kcmil	5/8-18	17/32	1-1/4	3-5/8	1-11/16	1	0.80
Z32NR		400 kcmil	5/8-18	17/32	1-3/8	3-5/8	1-11/16	1-1/8	0.90
Z34NR		500 kcmil	5/8-18	17/32	1-1/2	3-11/16	1-3/4	1-1/4	1.20
Z36NR		600 kcmil	5/8-18	17/32	1-1/2	3-13/16	1-7/8	1-5/16	1.40
Z40NRA ①	B	800 kcmil	5/8-18	17/32	1-13/16	5-17/32	2-1/4	1-1/2	2.40
Z34NRB ②		500 kcmil	7/8-14	11/16	1-1/2	3-11/16	1-3/4	1-1/4	1.50
Z40NR		800 kcmil	7/8-14	11/16	1-13/16	4-3/8	2-1/4	1-1/2	1.90
Z44NR		1000 kcmil	7/8-14	11/16	1-15/16	6-1/16	2-7/16	1-5/8	2.50

① Uses Insulating Sleeve Z104C4434
② Uses Insulating Sleeve Z88C3429

TYPE Z

MOLE™ COMPRESSION CONE

For use with Socket and Nut assembly the Z cone is machined to close tolerances to provide maximum secureness in gripping a wide range of cable sizes. Annular grooves in the inner barrel of the cone serve to further accomplish this result.

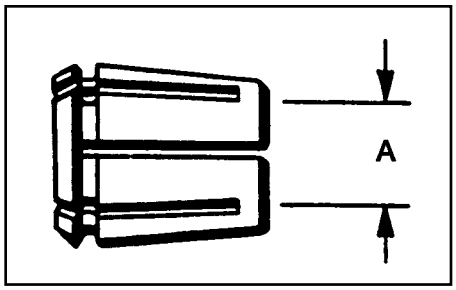

Catalog Number	Cable Size	For Use with Socket & Nut Assembly	A Inches	Approx Ship Weight in Lbs. Per C
Z6C28	#6 Str.	Z28NR	0.18 in	8.00
Z4C28	#4 Str.		0.23 in	7.50
Z2C28	#2 Str.		0.29 in	7.00
Z2528	1/0 Str.		0.37 in	6.00
Z2728	3/0 Str.		0.47 in	4.30
Z2828	4/0 Str.		0.53 in	3.30
Z6C29	#6 Str.	Z29NR	0.18 in	9.50
Z4C29	#4 Str.		0.23 in	9.30
Z2C29	#2 Str.		0.29 in	8.50
Z1C29	#1 Str.		0.33 in	8.00
Z2529	1/0 Str.		0.37 in	7.00
Z2629	2/0 Str.		0.42 in	6.30
Z2829	4/0 Str.		0.53 in	3.80
Z2929	250 kcmil		0.58 in	3.30
Z6C30	#5 Str.	Z30NR	0.18 in	16.00
Z4C30	#4 Str.		0.23 in	15.00
Z2C30	#2 Str.		0.29 in	14.00
Z1C30	#1 Str.		0.33 in	14.00
Z2530	1/0 Str.		0.37 in	13.00
Z2630	2/0 Str.		0.42 in	12.00
Z2730	3/0 Str.		0.47 in	11.00
Z2830	4/0 Str.		0.53 in	9.30
Z2930	250 kcmil		0.58 in	8.00
Z3030	300 kcmil		0.63 in	6.30
Z2C32	#2 Str.	Z32NR	0.29 in	21.00
Z1C32	#1 Str.		0.33 in	20.00
Z2532	1/0 Str.		0.37 in	19.00
Z2632	2/0 Str.		0.42 in	18.00
Z2732	3/0 Str.		0.47 in	17.00
Z2832	4/0 Str.		0.53 in	15.00
Z2932	250 kcmil		0.58 in	14.00
Z3032	300 kcmil		0.63 in	12.00
Z3132	350 kcmil		0.68 in	9.80
Z3232	400 kcmil		0.73 in	8.00
Z2C34	#2 Str.	Z34NR & Z34NRB	0.29 in	29.00
Z1C34	#1 Str.		0.33 in	28.00
Z2534	1/0 Str.		0.37 in	27.00
Z2634	2/0 Str.		0.42 in	26.00
Z2734	3/0 Str.		0.47 in	25.00

Catalog Number	Cable Size	For Use with Socket & Nut Assembly	A Inches	Approx Ship Weight in Lbs. Per C
Z2834	4/0 Str.	Z34NR & Z34NRB	0.53 in	22.00
Z2934	250 kcmil		0.58 in	21.00
Z3034	300 kcmil		0.63 in	19.00
Z3134	350 kcmil		0.69 in	17.00
Z3234	400 kcmil		0.73 in	15.00
Z3334	450 kcmil		0.76 in	13.00
Z3434	500 kcmil		0.81 in	11.00
Z2936	250 kcmil	Z36NR	0.58 in	32.00
Z3036	300 kcmil		0.63 in	30.00
Z3136	350 kcmil		0.69 in	28.00
Z3236	400 kcmil		0.73 in	26.00
Z3336	450 kcmil		0.76 in	23.00
Z3436	500 kcmil		0.81 in	21.00
Z3536	550 kcmil		0.86 in	19.00
Z3636	600 kcmil		0.89 in	17.00
Z2940	250 kcmil	Z40NR & Z40NRA	0.58 in	49.00
Z3040	300 kcmil		0.63 in	47.00
Z3140	350 kcmil		0.69 in	44.00
Z3240	400 kcmil		0.73 in	41.00
Z3340	450 kcmil		0.76 in	39.00
Z3440	500 kcmil		0.81 in	36.00
Z3540	550 kcmil		0.86 in	33.00
Z3640	600 kcmil		0.89 in	31.00
Z3740	650 kcmil		0.92 in	29.00
Z3840	700 kcmil		0.97 in	25.00
Z3940	750 kcmil		1.00 in	23.00
Z4040	800 kcmil		1.03 in	21.00
Z3444	500 kcmil	Z44NR	0.81 in	55.00
Z3544	550 kcmil		0.86 in	51.00
Z3644	600 kcmil		0.89 in	49.00
Z3744	650 kcmil		0.92 in	47.00
Z3844	700 kcmil		0.97 in	43.00
Z3944	750 kcmil		1.00 in	40.00
Z4044	800 kcmil		1.03 in	38.00
Z4144	850 kcmil		1.06 in	35.00
Z4244	900 kcmil		1.09 in	32.00
Z4344	950 kcmil		1.12 in	28.00
Z4444	1000 kcmil		1.15 in	24.00

Blue highlighted items are industry standard and most frequently ordered.

MOLE™ TYPE Z

COMPRESSION CONE

For Compact Conductor

For use with Socket and Nut assembly the Z cone is machined to close tolerances to provide maximum secureness in gripping a wide range of cable sizes. Annular grooves in the inner barrel of the cone serve to further accomplish this result.

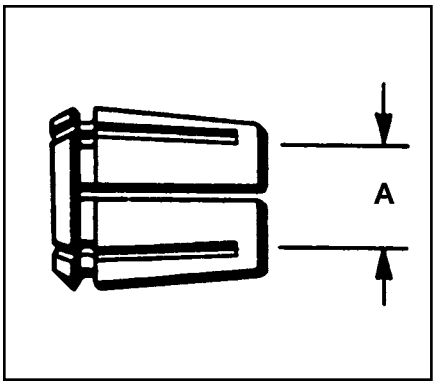

Compact Stranded Copper Cable			
Type Z Cone	Socket and Nut Assembly	Compact Cable Size	Nominal Conductor Diameter
Z3C28	Z28NR	#3 Str.	0.25
Z2C28		#2 Str.	0.29
Z1C28		#1 Str.	0.32
Z2528		1/0 Str.	0.37
Z2628		3/0 Str.	0.42
Z2728		3/0 Str.	0.47
Z2C29	Z29NR	#2 Str.	0.29
Z1C29		#1 Str.	0.33
Z2529		1/0 Str.	0.37
Z2629		2/0 Str.	0.42
Z2729		3/0 Str.	0.47
Z2829		4/0 Str.	0.52
Z2929		250 kcmil	0.57
Z1C30	Z30NR	#1 Str.	0.32
Z2530		1/0 Str.	0.37
Z2630		2/0 Str.	0.42
Z2730		3/0 Str.	0.47
Z2830		4/0 Str.	0.52
Z2930		250 kcmil	0.57
Z1C32	Z32NR	#1 Str.	0.32
Z2532		1/0 Str.	0.37
Z2632		2/0 Str.	0.42
Z2732		3/0 Str.	0.47
Z2832		4/0 Str.	0.52
Z2932		250 kcmil	0.57
Z3232		400 kcmil	0.73
Z2534	Z34NR	1/0 Str.	0.37
Z2634		2/0 Str.	0.42
Z2734		3/0 Str.	0.47
Z2834		4/0 Str.	0.52
Z2934		250 kcmil	0.57
Z3234		400 kcmil	0.73
Z3334		450 kcmil	0.77
Z3434		500 kcmil	0.81

Compact Stranded Copper Cable			
Type Z Cone	Socket and Nut Assembly	Compact Cable Size	Nominal Conductor Diameter
Z2536	Z36NR	1/0 Str.	0.37
Z2636		4/0 Str.	0.42
Z2736		3/0 Str.	0.47
Z2836		4/0 Str.	0.52
Z2936		250 kcmil	0.57
Z3236		400 kcmil	0.73
Z3336		450 kcmil	0.76
Z3436		500 kcmil	0.81
Z3636		600 kcmil	0.90
Z2640	Z40NR	2/0 Str.	0.42
Z2740		3/0 Str.	0.47
Z2840		4/0 Str.	0.52
Z2940		250 kcmil	0.57
Z3240		400 kcmil	0.73
Z3340		450 kcmil	0.76
Z3440		500 kcmil	0.81
Z3640		600 kcmil	0.90
Z2844	Z44NR	4/0 Str.	0.52
Z2944		250 kcmil	0.57
Z3244		400 kcmil	0.73
Z3344		450 kcmil	0.76
Z3444		500 kcmil	0.81
Z3644		600 kcmil	0.90

Blue highlighted items are industry standard and most frequently ordered.

TYPE ZMS

MOLE™ COUPLER

For Connecting MOLE

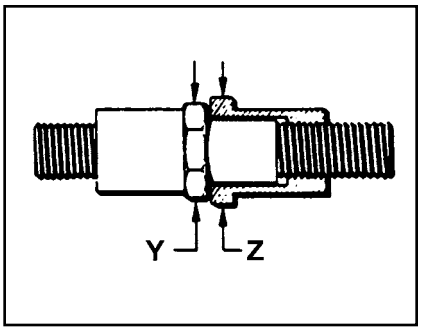

A compact, easy-to-tape MOLE™ Coupler for joining multiple MOLE end-to-end. Allows for expansion of underground systems by joining more MOLE to existing MOLE™ installations. Easily assembled to the end outlets of MOLE™ Types ZMT, ZMX, ZML, and ZMK. Can also be used in side outlets for other types of MOLE™ arrangements. The MOLE™ Coupler has a lock-nut feature which permits pre-positioning of the added MOLE™, and facilitates training of new cables. Makes an effective electrical and mechanical connection.

OUTLET RANGE: **"A" (5/8") 6 Str. - 600 kcmil**
"B" (7/8") 2 Str. - 1000 kcmil
"C" (1-1/8") 500 - 1500 kcmil

MOLE™ Outlet Size	MOLE™ Coupler	MOLE™ Coupler Ampere Capacity	Dimensions in Inches			Approx. Ship Wt. Lbs.
			Overall Length	Cross Flats		
				Y	Z	
A	**ZMS29**	1200	4-21/32	1-3/16	1-3/8	1.30
B	**ZMS34**	1600	5-7/32	1-1/2	1-3/4	2.30
C	**ZMS40**	2000	5-3/4	1-3/4	2-1/8	3.30

TYPE CM

NOTAPE™ MOLE™ SLEEVE

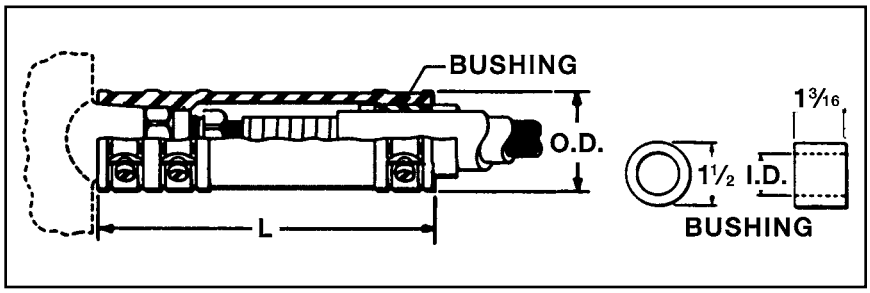

The BURNDY® NOTAPE™ MOLE™ Sleeve effectively eliminates the necessity of taping from the MOLE™ outlet to the insulation of the incoming cable. The sleeve fits snugly over the MOLE™ outlet and is held securely in place by a non-corrosive clamp. Bushings inside the sleeve are supplied to fit closely over the insulation of the cable. The other end of the assembly is clamped to the cable insulation. For rubber insulated cable two clamps are supplied.

For oil filled cables a third clamp is provided to effect an oil-tight joint.

OUTLET RANGE: **"A" 6 Str. - 600 kcmil**

Sleeve & Clamps								Bushing		
To be Used Over Outlet Size	Type of Cable Insulation	Cable Range Accommodated	Catalog No. Sleeve & Clamps Only	For Use Sockets & Nut Assy	Dimensions in Inches		App. Ship Wt. Ea. in Lbs.	Catalog No. Bushing Only	I.D.	App. Ship Wt. Ea. in Lbs.
					L	O.D.				
A	Rubber or Rubber-Lead	#6 Str. to 600 kcmil	**CM29L**	**Z28NR to Z36NR**	6-1/4	2-1/4	1.10	**CMB-29R**	†	0.20
	Paper-Lead or Vanished Cambric	#6-4/0 Str.	**CM2829P**	**Z28NR**	6-1/4	2-1/4	1.10	**CMB-29P**	‡	0.20
		#6 AWG-250 kcmil	**CM2929P**	**Z29NR**						
		#6 AWG-300 kcmil	**CM3029P**	**Z3ONR**						
		#2 AWG-400 kcmil	**CM3229P**	**Z32NR**						
		#2 AWG-500 kcmil	**CM3429P**	**Z34NR**						
		250-600 kcmil	**CM3629P**	**Z36NR**						

† Diameter over rubber insulation or lead sheath to be specified by customer.
‡ Diameter over lead sheath to be specified by customer.

Bushings must be ordered separately. They are not supplied with the sleeve. The bushing inside diameter is sized in 64ths.

Blue highlighted items are industry standard and most frequently ordered.

TYPE Z-C

MOLE™ OUTLET INSULATING SLEEVE

An effective aid in insulating MOLE™ outlets to produce a secure watertight joint with a minimum of taping. Fits over the MOLE™ outlet and over the maximum outer diameter of insulated cable. The difference between the I.D. of the standard sleeve and the O.D. of the cable insulation is taken up by wrapping the cable with several turns of rubber tape. The only external taping required to effectively seal the joint is the small area at each end of the sleeve.

Fig. 1 Fig. 2

Catalog Number	For Use with Socket and Nut Assemblies	Fig. No.	Dimensions in Inches			Approx. Ship Wt. in Lbs. per C
			*A (Max.)	L	W	
Z72C3029	Z28NR Z29NR Z30NR	1	1-1/8	4-3/4	1-7/8	20
Z88C3429	Z32NR Z34NR Z34NRB Z36NR	1	1-3/8	5-3/16	2-1/8	30
Z104C4034	Z40NR	1	1-5/8	5-13/16	3-5/6	60
Z104C4434	Z44NR Z40NRA	2	1-5/8	7-3/16	3-5/6	70
Z144C4840	Z45NR Z46NR Z47NR z48NR	2	2-1/4	9-5/16	3-1/2	130

* Build up insulation of MOLE™ Joint with rubber tape to equal inner diameter of Insulating Sleeve, for insulating sleeve with inner diameter other than standard call customer service.

HYCRAB™ CONNECTORS

One of the most economical devices for connecting several cables to a common junction point is the HYCRAB™, which is essentially a bus bar with a number of compression-type connector outlets, pre-insulated to eliminate taping. Like the MOLE™, the HYCRAB™ fits into a limited space, is simple to rack, and facilitates addigin future cables.

Insert and Insulation

Having an insert similar to that of the MOLE™, the HYCRAB™, has connector outlets of the BURNDY® HYDENT™ compression type. These tubular elements are indented to the cable by BURNDY® HYPRESS™ installation tools and dies, designed to compress connector and cable together with indents of controlled depth. HYDENT™ compression connections are made quickly and easily, have relative conductivities of 100% or higher, are electrically stable, and mechanically secure.

The HYCRAB™ is insulated by a jacket of molded rubber to resist prolonged exposure to oil or other contaminants.

Installation

Insulation fingers are rolled back to expose the tublar outlets, sufficiently spaced to allow for the convenient operation of BURNDY® HYPRESS™ compression tools. Cable ends are inserted into the outlets. Each is crimped with one or two indents, and the fingers are rolled forward again to cover the outlets. Installation is completed by taping the short space between the tip of the finger and cable insulation.

Variations and Accessories

Uninsulated HYCRAB™ connectors for joining bare neutral cables are available in the same range of sizes and number of outlets as the insulated HYCRAB™. By using reducing adapters, the HYCRAB™ can accommodate service wires as small as #6, in addition to the 4/0 or 500 kcmil cable sizes for which these connectors are ordinarily used.

TYPE YM

INSULATED HYCRAB™

A compact insulated crab joint for connecting underground cables at junction points. Two outlets, one on either side of the HYCRAB™ body are ready for immediate use. All other outlets are sealed with vulcanized rubber plugs which are easily removed when future installations are made. This unit eliminates bulky, difficult crotch taping. By using Reducing Adapters, Type Y-R the HYCRAB™ can be installed on cable sizes from #6 to 500 kcmil (e.g., use Y3428R to install 4/0 into YM4-34).

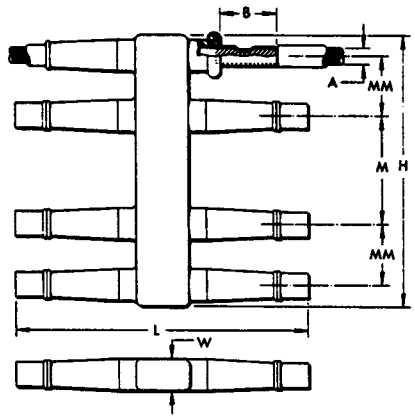

Catalog Number	Cable Size A	# of Outlets	Dimension in Inches						Installation Information			App. Ship Wt. in Lbs.
									HYPRESS™ & Indentor Die		# of Indents	
									Y34A with Y34PR	Y34BH with Y34PR		
			B	H	L	M	MM	W	Nest Die			
YM4-28	4/0 Str.	4	2	3-11/16	10-3/16	—	2-3/16	1-1/8	A28D	B28D	1	1.80
YM6-28		6	2	7-9/16	10-3/16	3-7/8	2-3/16	1-1/8	A28D	B28D	1	3.00
YM8-28		8	2	9-3/4	10-3/16	3-7/8	2-3/16	1-1/8	A28D	B28D	1	4.30
YM10-28		10	2	13-1/2	8-3/4	3-1/2	2-1/2	1-1/8	A28D	B28D	1	5.50
YM12-28		12	2	16	8-3/4	3-1/2	2-1/2	1-1/8	A28D	B28D	1	6.70
YM4-34	500 kcmil	4	2-1/2	4-3/8	12-5/8	—	2-3/8	1-1/2	A34D	No Nest Die Required. Use Indentor Only.	2	4.50
YM6-34		6	2-1/2	8-5/8	12-5/8	4-1/4	2-3/8	1-1/2	A34D		2	7.00
YM8-34		8	2-1/2	11	12-5/8	4-1/4	2-3/8	1-1/2	A34D		2	11.00
YM10-34		10	2-1/2	14-1/2	12-1/2	3-3/4	2-1/2	1-1/2	A34D		2	15.00
YM12-34		12	2-1/2	17	12-1/2	3-3/4	2-1/2	1-1/2	A34D		2	19.00

Blue highlighted items are industry standard and most frequently ordered.

TYPE YNM

HYCRAB™

For Joining Bare Neutral Cables

A compact uninsulated multiple connector for joining bare neutral underground cables. For insulated crab joints, see HYCRAB™, Type YM. Reducing adapters, Type Y-R, permit the HYCRAB products listed below to take a full range of cable sizes from #6 to 500 kcmil. For proper installation, see table below.

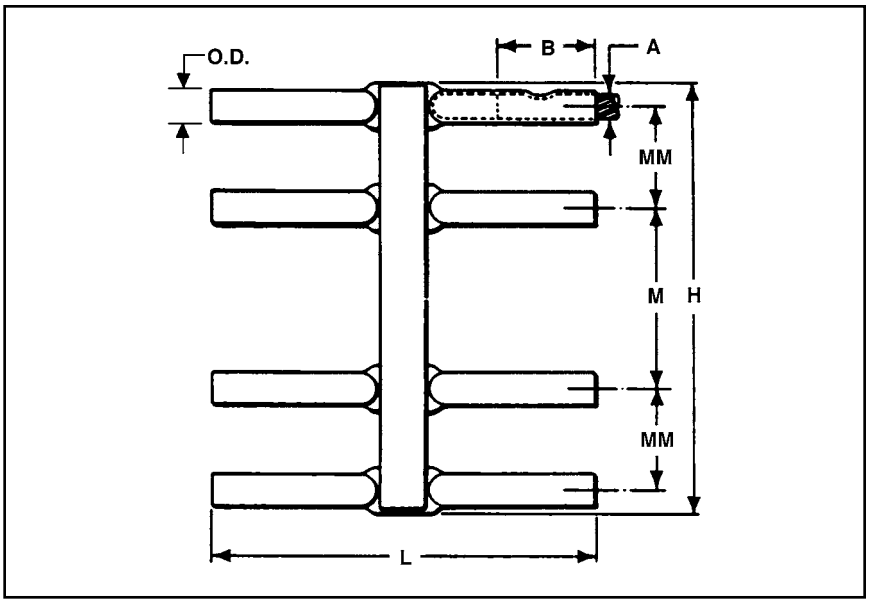

Catalog Number	Cable Size A	No. of Outlets	Dimension in Inches						Installation Information			App. Ship Wt. in Lbs.
									HYPRESS™ & Indentor Die		No. of Indents	
									Y34A with Y34PR	Y34BH with Y34PR		
			B	H	L	M	MM	O.D.	Nest Die			
YNM428	4/0 Str.	4	2	3-3/16	8-3/16	—	2-3/16	11/16	A28D	B28D	1	1.00
YNM628		6	3-1/8	7-1/6	8-3/16	3-7/8	2-3/16	11/16	A28D	B28D	1	1.80
YNM828		8	2	9-1/4	8-3/16	3-7/8	2-3/16	11/16	A28D	B28D	1	2.50
YNM434	500 kcmil	4	2-1/2	3-15/16	10-5/8	—	2-3/8	1-1/16	A34D	No Nest Die Required. Use Indentor Only.	2	3.00
YNM634		6	2-1/2	8-3/16	10-5/8	4-1/4	2-3/8	1-1/16	A34D		2	5.00
YNM834		8	2-1/2	10-9/16	10-5/8	4-1/4	2-3/8	1-1/16	A34D		2	7.30

* Bare HYCRAB™ can be furnished to accommodate both 4/0 and 500 kcmil cables.

NETWORK PROTECTION

The primary purpose of network protection is the controlled interruption of fault currents before damage occurs to cable insulations and associated equipment, and the elimination of unnecessary service interruptions. The limiter and fuses for network protection are closely associated wtith the connectors and are equally vital to the safe, continuous operation of an underground system.

BURNDY has developed protective devices that have played a major role in reducing underground system outages and the subsequent expenses incurred in the loss of service and replacement of damaged cables. A basic objective has been the design of limiter-connector combinations that, in addition to protecting against the effects of fault currents, economize on both space and installation costs.

Limiters are designed to protect underground secondary cable from damage by fault currents of two principal kinds: high energy arcing faults and sustained faults. The arcing fault, usually of shorter duration and lesser intensity, is more common. While this type of fault may sputter briefly and then clear, some may be sustained long enough to "roast" the insulation.

A sustained fault occurs when two conductors come solidly into contact and permit the flow of heavy short-circuit currents. Without suitable protection, these fault currents are heavy enough to damage cable insulation and often produce combustible fumes accompanied by fire and explosion.

Installed at each end of cable sections, limiters have time-current characteristics designed to avoid unnecessary outages. Network protector fuses, installed in the network protector on the load side of the breaker, provide back-up protection against failure of a network protector to open on a primary fault. Coordinated characteristics of limiters and fuses provide for fault currents to be interrupted before they can cause damage, but only under predetermined time-current conditions, and only in those parts of the system where interruption is necessary.

Limiters

Engineered to interrupt the circuit before cables carrying a fault current are isually damaged, limiters acto to confine damage to the section of cable where the fault occurred. The limiters are designed to prevent unnecessary clearing and will "hang on" during:

1. Faults with wold clear without damaging cable insulation
2. Overloads from motor starting, load transfer because of primary fault, or temporary overload during fault conditions
3. Overloads from loss of secondary conductors caused by clearing of other limiters
4. Reverse current flow through the network protector on primary faults
5. Faults on other secondary cables

For proper proection BURNDY® limiters are designed with time-current characteristcs approximating the insulation damage curve of the cable with which they wll be used. Figure 4 shows time-current characteristic curves for a range of standard (250 volt) limiters, superimposed on insulation damage curves for several cable sizes. Although the limiter curve crosses the insulation damage curves, in practice the limiters will blow before teh insulation can deteriorate. The insulation damage characteristics represent three phases equally loaded in a duct. Since low-current faults seldom affect more than one phase at a time, the rate of heat generated in the conduit is much less than for a balanced 3-phase fault, and the time to reach the damage point is appreciably longer. Practical experience confirms that limiters provide protection during low-current, as well as high-current faults.

Construction

The limiter is essentially a compression-type electrical connector with its center section accurately formed to provide a fusible element. This fusible element is enclosed in a molded composition shell and the assembly encased in an insulated sleeve.

Interrupting capacities are as follows:
Standard Limiters: 30,000 amps at 250V
Replaceable-Link Limiters: 20,000 amps at 250V

The protection probably lies in the fact that the fault impedance reduces the actual fault current to a value considerably less than calculated.

Replaceable-Link Limiters

Replaceable-link limiters, which provide faster time-current characteristics (Figure 5), are used in smaller networks, on teh fringes of larger networks, at points where radial feeders leave a network, and for fusing service cables. As its name implies, this limiter is also distinctive in that its fusible link is replaceable.

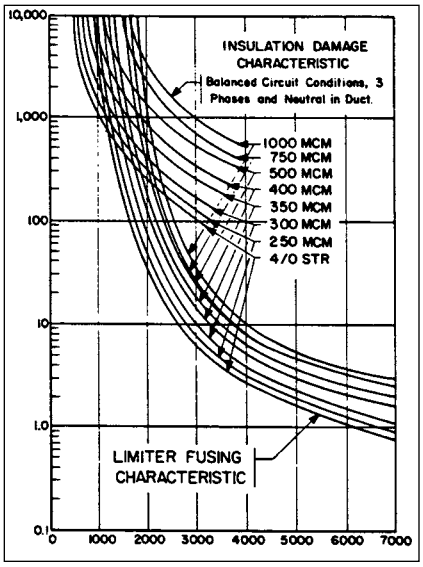

Figure 4: Current - Amperes Standard 250 Volt Limiters

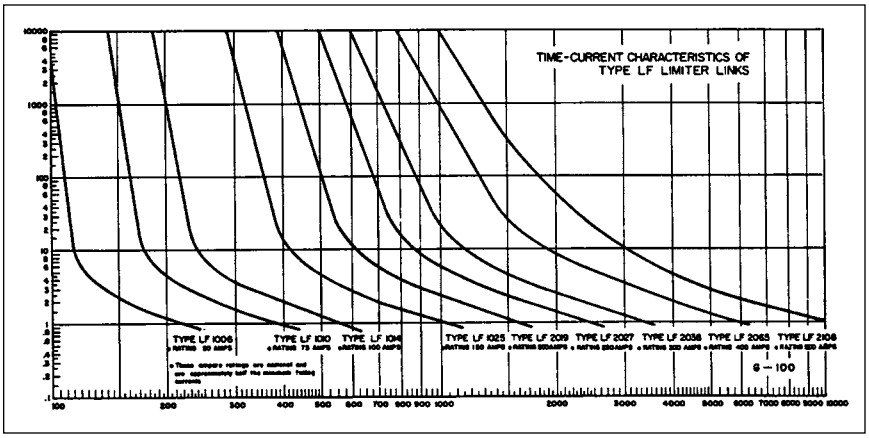

Figure 5: Current in Amperes Replaceable-link Limiters

Blue highlighted items are industry standard and most frequently ordered.

Canada: 1-800-387-6487 www.burndy.com US: 1-800-346-4175

NETWORK PROTECTION (Continued)

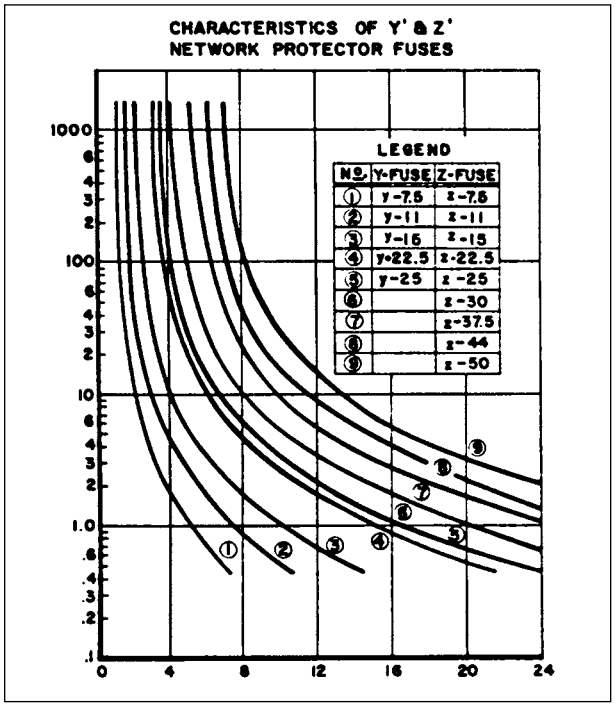

Figure 7: Amperes in Thosands

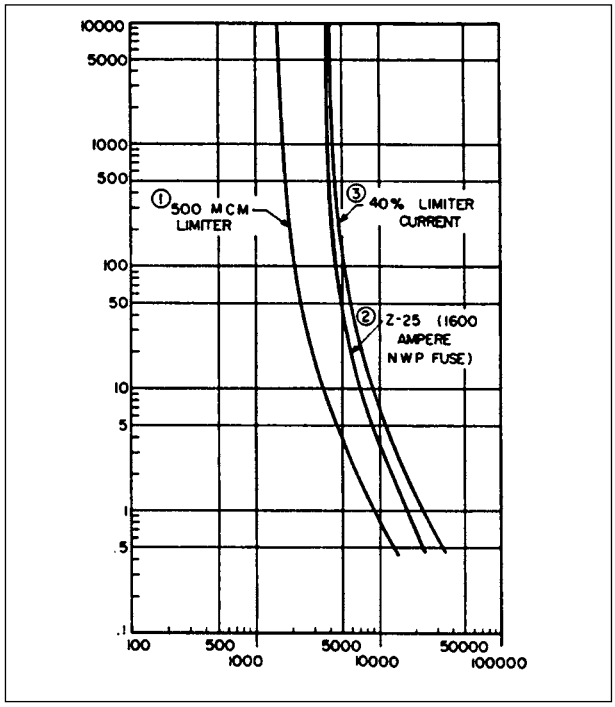

Figure 8: Current in Amperes

Limiter Variations

The Limiter Lug provides a fusible connection between a cable and a flat surfaced terminal of a transformer or other apparatus. The Limiter Tap incorporates a Limiter Lug assembly, modified to terminate cable to a ring bus. Thie straight Limiter is made for installation in a single conductor cable. The Molimiter is a Limiter designed so that one end is crimped onto a cable and the other fits the clamping element of a MOLE™ outlet. The Limiter HYCRAB™ connector is essentially a HYCRAB™ with a fusible section in each of its outlets.

Network Protector Fuses

Type Y and Z Network Protector Fuses provide back-up protection in case the protector breaker fails to operate during a primary fault. The fuse time-current curves (Figure 7), are similar to those of the limiter, thus permitting correct fuse-limiter coordination for complete network protection.

Design and Construction

The fusible element for a Type Y or Type Z Fuse is a tin-plated copper bar with reduced section, encased in an arc-resistant molded transite enclosure. One-piece construction eliminates possibility of joint failure and assures maximum reliability.

Limiter-Fuse Coordination

To isolate a fault before it can cause extensive damage, and without interrupting service in other sections of the network, limiters and fuses must clear at the proper time and in proper sequence, depending on teh fault's location in the primary or secondary system. When a primary fault occurs, the fuse should clear before any limiters blow. For a secondary fault, limiters should clear the fault before the network protector fuse opens. Failure of limiters and network protector fuses to function in proper sequence could cause cascading of other Fuses, or clearing of secondary faults by Fuses rather than limiters. Premature blowing of Limiters not in the faulted section could cause unnecessary service interruption in sections remote from the fault.

To assure the coordinated functioning of fuses and limiters throughout a system, proper rating must be selected. The four-step "Coordination Study" (Figure 8) used in a 4-parallel cable feed system from the protector to the first secondary junction is a typical example of how to select proper ratings.

1. Plot the damage characteristic curve f the cable insulation in the system. Curves for Class L620 (260° C or 500° F), appear in Figure 5.
2. Plot the time-current characteristic curve of the same limiter in Parallel secondary mains, assuming it carries 40% of total backfeed current. Allowing for the possibility of unequal current distribution of secondary mains, the "40% Cable Limiter Curve" provides a conservative basis for selection of network protector fuses.
3. Select a fuse with its time-current characteristics (Figure 7) lying between the limiter curves plotted in steps 2 and 3.

This procedure avoids the selection of fuses so light that they might overheat the network protector or clear unnecessarily, possibly cascading other fuses in the network; or so heavy that transformer secondaries might be damaged or limiters blow before teh fuse. Proper limiter-fuse coordination, facilitated by the use of fuses and limiters that are precisely matched, assures effective protection without unnecessary interruption.

TYPES YFS-CR AND YFS-CP

LIMITER ASSEMBLY

With Ceramic Shell and Rubber Sleeve for Insulated Cables

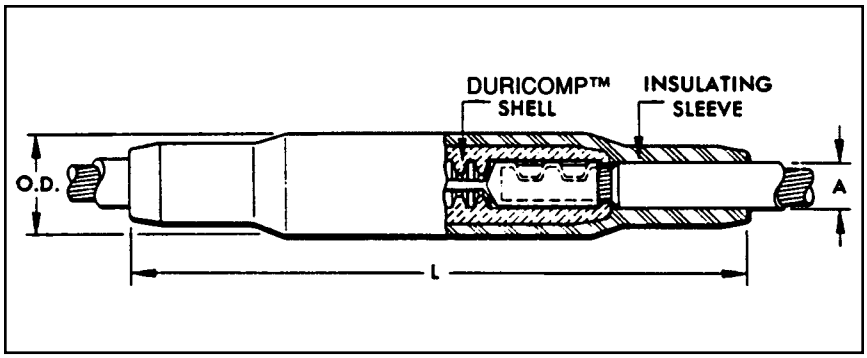

The Limiter combines the functions of fuse and connector. The fusible element which is an integral part of the connector will clear faults that are great enough to cause damage to the cable insulation. However it will not clear on minor overloads of short duration. Fusing characteristics of the limiter are shown in technical section. For HYPRESS™ installation, see table below.

For Use on Rubber Insulated Cable	For Use on Paper Insulated Cable-Oil Tight Cable Sockets	Cable Size	Dimensions in Inches			Installation Information				App. Ship Wt. in Lbs.
						HYPRESS™ & Indentor Die				
			Max. Cable Dia. over Insulation A	L	O.D.	Y34A with Y34PR	Y34BH with Y34PR	Y44B with Y44PR	Number of Indents	
Catalog Number	Catalog Number					Nest Die				
YFS28CR	**YSF28CP**	4/0 Str.	1	12-3/4	1-15/16	A28D	B28D	E28D	1	1.40
YFS29CR	**YFS29CP**	250 kcmil	1	12-3/4	1-15/16	A29P	B29D	E29D	1	1.40
YFS30CR	**YFS30CP**	300 kcmil	1-1/8	13-1/2	2-3/16	A30D	B30D	E30D	2	2.00
YFS31CR	**YFS31CP**	350 kcmil	1-1/8	13-1/2	2-3/16	A31D	B31D	E31D	2	2.00
YFS32CR	**YFS32CP**	400 kcmil	1-1/8	13-1/2	2-3/16	A32D	B32D	E32D	2	2.10
YFS34CR	**YFS34CP**	500 kcmil	1-11/32	15-7/8	2-3/8	A34D	No Nest Die Required	E34D	2	2.90
YFS39CR	**YFS39CP**	750 kcmil	1-1/2	15-9/16	2-9/16	—	—	E39D	2	3.70

For conductor sizes not listed call customer service. To specify a fast acting limiter in any configuration insert an "F" before the conductor number (e.g., YFSF34CR specifies a 1/2 thick limiter section).

TYPE YFS-CPL

LONG LIMITER ASSEMBLY

With Ceramic Shell and Rubber Sleeve for Paper-Lead Cables

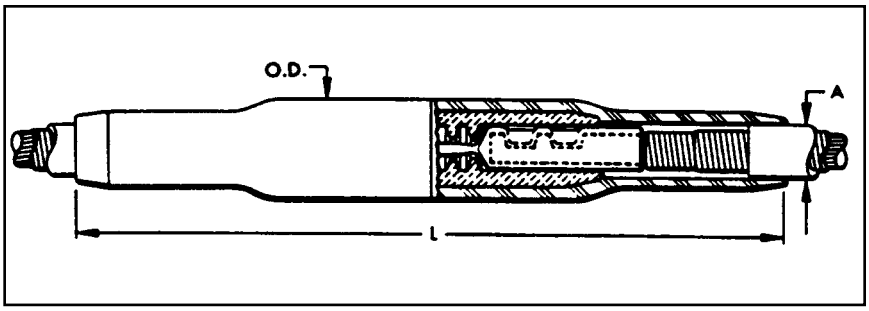

The Long Limiter performs the same functions as the Limiter shown, Types YFS-CR and YFS-CP. It differs in that it has extra long cable sockets which are preferred by some for use on paper insuated cable. The end seams are sealed to make the sockets oil tight. Fusing characteristics of the Limiter are shown in technical section. For proper HYPRESS™ installation, see table below.

Catalog Number	Cable Size	Dimensions in Inches			Installation Information				App. Ship Wt. in Lbs.
		Max. Cable Dia. over Insulation A	L	O.D.	HYPRESS™ & Indentor Die			Number of Indents	
					Y34A with Y34PR	Y34BH with Y34PR	Y44B with Y44PR		
					Nest Die				
YFS28CPL	4/0 Str.	1	12-3/4	1-15/16	A28D	B28D	E28D	1	1.50
YFS29CPL	250 kcmil	1	12-3/4	1-15/16	A29P	B29D	E29D	1	1.50
YFS30CPL	300 kcmil	1-1/8	13-1/2	2-3/16	A30D	B30D	E30D	2	2.20
YFS31CPL	350 kcmil	1-1/8	13-1/2	2-3/16	A31D	B31D	E31D	2	2.20
YFS32CPL	400 kcmil	1-1/8	13-1/2	2-3/16	A32D	B32D	E32D	2	2.30
YFS34CPL	500 kcmil	1-11/32	15-7/8	2-3/8	A34D	No Nest Die Required	E34D	2	3.20
YFS39CPL	750 kcmil	1-1/2	15-9/16	2-9/16	—	—	E39D	2	4.10

For conductor sizes not listed call customer service. To specify a fast acting limiter in any configuration insert an "F" before the conductor number (example: YFSF34CR specifies and 1/2 thick limiter section).

TYPES YFSR, YFSP

LIMITER

For Use with Limiter Assembly

The Limiter serves the double function of a fuse and a coupler. The fusible element is an integral part of the coupler and is closely and carefully sized to insure excellent performance. Fusing characteristics of the Limiter are shown in technical section. For proper HYPRESS™ installation, see table below.

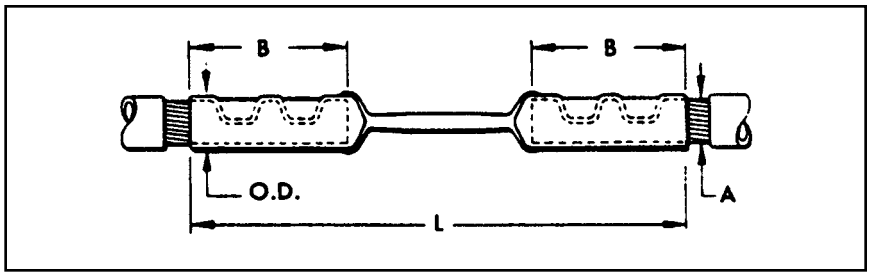

For use on Rubber Insulated Cable Catalog Number	For use on Paper Insulated Cable-Oil Tight Cable Sockets Catalog Number	Cable Size	Dimensions in Inches B	L	O.D.	Installation Information HYPRESS™ & Indentor Die Y34A with Y34PR Nest Die	Y34BH with Y34PR Nest Die	Y44B with Y44PR Nest Die	Number of Indents	App. Ship Wt. in Lbs.
YFSR28	YFSP28	4/0 Str.	1-3/4 in	6-3/8	11/16	A28D	B28D	E28D	1	0.23
YFSR29	YFSP29	250 kcmil	1-7/8 in	6-3/8	3/4	A29D	B29D	E29D	1	0.27
YFSR30	YFSP30	300 kcmil	2 in	6-3/4	13/16	A30D	B30D	E30D	2	0.33
YFSR31	YFSP31	350 kcmil	2 in	6-3/4	7/8	A31D	B31D	E31D	2	0.37
YFSR32	YFSP32	400 kcmil	2-1/8 in	7	31/32	A32D	B32D	E32D	2	0.46
YFSR34	YFSP34	500 kcmil	2-7/8 in	8-3/4	1-1/16	A34D	No Nest Die Required	E34D	2	0.79
YFSR39	YFSP39	750 kcmil	2-7/8 in	9	1-5/16	—	—	E39D	2	1.20

TYPE YFSP-L

LONG LIMITER

For Use with Long Limiter Assembly

The Long Limiter serves the same purpose as the Limiter shown above but has extra long oil tight cable sockets which may be preferred by some for use on paper insulated cables. Similarly designed to clear on overloads that will damage the insulation of the cable. Fusing characteristics of the Long Limiter are shown in technical section. For HYPRESS™ installation, see table below.

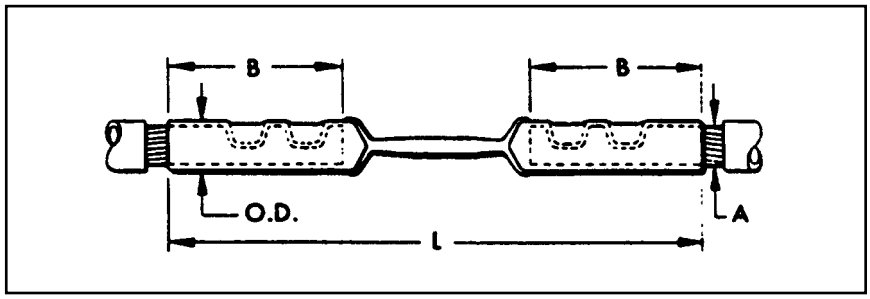

Catalog Number	Cable Size	Dimensions in Inches B	L	O.D.	Installation Information HYPRESS™ & Indentor Die Y34A with Y34PR Nest Die	Y34BH with Y34PR Nest Die	Y44B with Y44PR Nest Die	Number of Indents	App. Ship Wt. in Lbs.
YFSP28L	4/0 Str.	2-15/16 in	8-3/4	11/16	A28D	B28D	E28D	1	0.34
YFSP29L	250 kcmil	3-1/16 in	8-3/4	3/4	A29D	B29D	E29D	1	0.40
YFSP30L	300 kcmil	3-3/8 in	9-1/2	13/16	A30D	B30D	E30D	2	0.50
YFSP31L	350 kcmil	3-3/8 in	9-1/2	7/8	A31D	B31D	E31D	2	0.58
YFSP32L	400 kcmil	3-3/8 in	9-1/2	31/32	A320	B32D	E32D	2	0.68
YFSP34L	500 kcmil	4-3/16 in	11-3/8	1-1/16	A34D	No Nest Die Required	E34D	2	1.10
YFSP39L	750 kcmil	4-3/16 in	11-5/8	1-5/16	—	—	E39D	2	1.60

For conductor sizes not listed call customer service.

Blue highlighted items are industry standard and most frequently ordered.

TYPES YFA-CR, YFA-CP

LIMITER LUG ASSEMBLY

With Ceramic Shell and
Rubber Sleeve

The Limiter Lug combines the functions of terminal and fuse. The fusible element is an integral part of the connector and is so designed that it will clear overloads which are great enough to cause damage to the cable insulation. Unlike an ordinary fuse, however, it will not clear on minor overloads of short duration. Fusing characteristics of the Limiter Lugs are shown in the technical section. Component parts shown in the table below may be purchased separately. For proper HYPRESS™ installation, see table below.

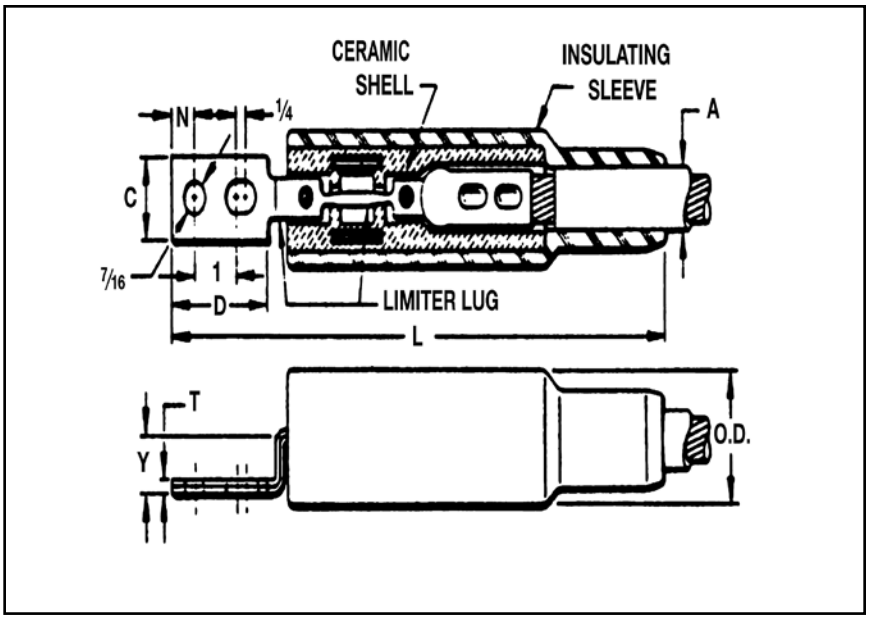

For Use on Rubber Insul. Cable Catalog No.	For use on Paper Insul. Cable-Oil Tight Cable Socket Catalog No.	Cable Size	Dimensions in Inches								Installation Information				Approx Ship Weight
			(Max. Cable Dia. over Insul.) A	C	D	L	N	T	Y	O.D.	HYPRESS™ & Indentor Die			# of Indents	
											Y34A with Y34PR	Y34BH with Y34PR	Y44B with Y44PR		
											Nest Die				
YFA28CR2	**YFA28CP-2**	4/0 Str.	1.00	1.00	2.19	11.56	0.44	0.14	0.84	2.00	A28D	B28D	E38D	1	1.20
YFA29CR2	**YFA29CP-2**	250 kcmil	1.00	1.13	2.19	11.56	0.44	0.16	0.84	2.00	A29D	B29D	E29D	1	1.20
YFA30CR2	**YFA30CP-2**	300 kcmil	1.22	1.19	2.31	13.19	0.50	0.16	1.00	2.38	A30D	B30D	E30D	2	1.80
YFA31CR2	**YFA31CP-2**	350 kcmil	1.22	1.31	2.31	13.19	0.50	0.19	1.00	2.38	A31D	B31D	E31D	2	2.20
YFA32CR2	**—**	400 kcmil	1.22	1.44	2.31	13.19	0.50	0.19	1.00	2.38	A32D	B32D	E32D	2	2.30
YFA34CR2	**YFA34CP-2**	500 kcmil	1.34	1.50	2.75	13.63	0.50	0.22	1.00	2.38	A34D	No Nest Die Req'd.	E34D	2	2.50
YFA39CR2	**YFA39CP-2**	750 kcmil	1.50	1.94	2.75	13.63	0.50	0.25	1.00	2.38	—	—	E39D	2	2.80

For conductor sizes not listed call customer service.
To specify a fast acting limiter in any configuration insert an "F" before the conductor number (example: YFSF34CR specifies and 1/2 thick limiter section).

TYPE YFA-CPL

LONG LIMITER LUG ASSEMBLY

With Ceramic Shell
and Rubber Sleeve —
for Paper-Lead Cables

A Limiter Lug similar to Type YFA-CR or YFACP. In this case, however, we supply an extra long cable socket which is sometimes preferred for use on paper insulated cable. The end seams are sealed to make sockets oil tight. Fusing characteristics of the Limiter Lugs are shown in the technical section. For proper HYPRESS™ installation, see table below.

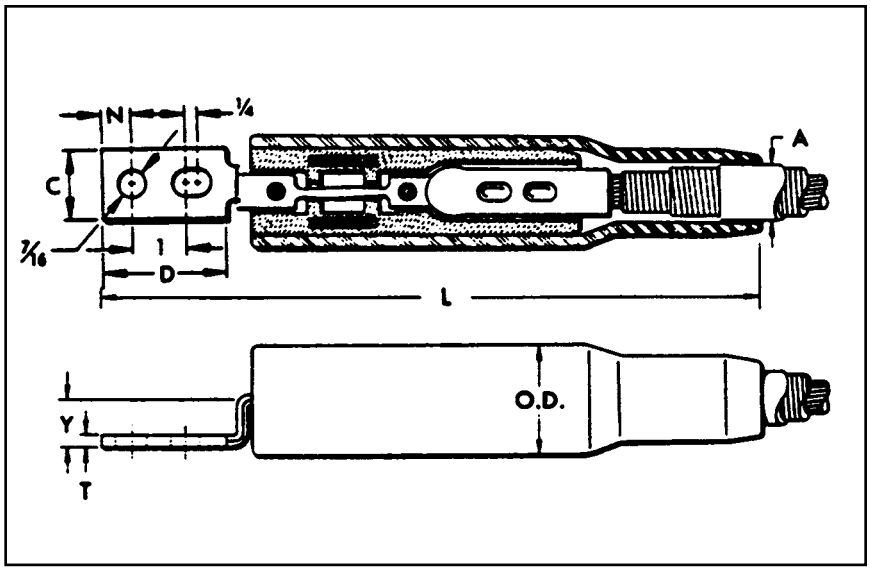

Catalog Number	Cable Size	(Max. Cable Dia. over Insul.) A	Dimensions in Inches								Installation Information				App. Wt. in Lbs.
											HYPRESS™ & Indentor Die			# of In-dents	
			C	D	L	N	T	Y	O.D.	No of Indents in Cable Sockets	Y34A with Y34PR	Y34BH with Y34PR	Y44B with Y44PR		
											Nest Die				
YFA28CPL2	4/0 Str.	1.00	1.00	2.19	11.56	0.44	0.14	0.84	2.00	1	A28D	B28D	E28D	1	1.20
YFA29CPL2	250 kcmil	1.00	1.09	2.19	11.56	0.44	0.16	0.84	1.75	1	A29D	B29D	E29D	1	1.30
YFA30CPL2	300 kcmil	1.22	1.19	2.31	13.19	0.50	0.16	1.00	2.38	2	A30D	B30D	E30D	2	1.90
YFA31CPL2	350 kcmil	1.22	1.28	2.31	13.19	0.50	0.19	1.00	0.88	2	A31D	B31D	E31D	2	2.30
YFA32CPL2	400 kcmil	1.22	1.44	2.31	13.19	0.50	0.19	1.00	2.38	2	A32D	B32D	E32D	2	2.40
YFA34CPL2	500 kcmil	1.34	1.50	2.75	13.63	0.50	0.22	1.00	1.06	2	A34D	No Next Die Req'd.	E34D	2	2.70
YFA39CPL2	750 kcmil	1.50	1.94	2.75	13.63	0.50	0.25	1.00	2.38	2	—	—	E39D	2	3.10

For conductor sizes not listed call customer service.
To specify a fast acting limiter in any configuration insert an "F" before the conductor number (e.g., YFSF34CR specifies a 1/2 thick limiter section).

TYPES YFAR, YFAP

LIMITER LUG

For Use with Limiter Lug Assembly

The Limiter Lug incorporates an accurately determined fusible section as an integral part with its terminal end. The fusible section is so selected that it wil prevent the cable from roasting or damage from a short circuit, although it will not clear on minor overloads of short duration not harmful to cable insulation. For proper HYPRESS™ installation, see table below.

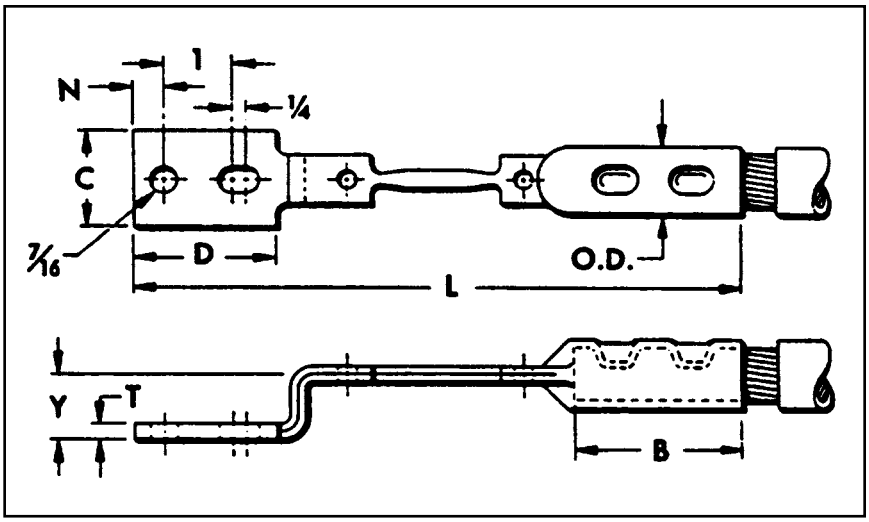

For Use on Rubber Insul. Cable Catalog No.	For Use on Paper Insul. Cable-Oil Tight Cable Socket Catalog No.	Cable Size	Dimensions in Inches B	C	D	L	N	T	Y	O.D.	Installation Information: HYPRESS™ & Indentor Die Y34A with Y34PR	Y34BH with Y34PR	Y44B with Y44PR	No. of Indents	App. Wt. in Lbs.
											Nest Die				
YFAR282	**YFAP282**	4/0 Str.	1.81	1.00	2.19	8.22	0.44	0.14	0.89	0.70	A28D	B28D	E28D	1	0.28
YFAR292	**YFAP292**	250 kcmil	1.81	1.09	2.19	8.22	0.44	0.16	0.91	0.76	A29D	B29D	E29D	1	0.33
YFAR302	**YFAP302**	300 kcmil	1.94	1.19	2.31	8.88	0.50	0.16	1.07	0.83	A30D	B30D	E30D	2	0.42
YFAR312	**YFAP312**	350 kcmil	1.94	1.28	2.31	8.88	0.50	0.18	1.08	0.89	A31D	B31D	E31D	2	0.46
YFAR322	**YFAP322**	400 kcmil	2.06	1.38	2.31	9.12	0.50	0.19	1.10	0.97	A32D	B32D	E32D	2	0.55
YFAR342	**YFAP342**	500 kcmil	2.44	1.54	2.75	10.00	0.50	0.23	1.11	0.97	A34D	No Nest Die Req'd.	E34D	2	0.83
YFAR392	**YFAP392**	750 kcmil	2.44	1.91	2.75	10.00	0.50	0.26	1.14	1.34	—	—	E39D	2	1.20

For conductor sizes not listed call customer service.

TYPE YFAP-L

LONG LIMITER LUG

For Use with Limiter Lug Assembly

Similar to Limiter Lug Types YFAR and YFAP, except that this type provides a long oil tight cable socket, preferred by some users of paper-insulated cables. Fusing characteristics shown in technical section. For HYPRESS™ installation, see table below.

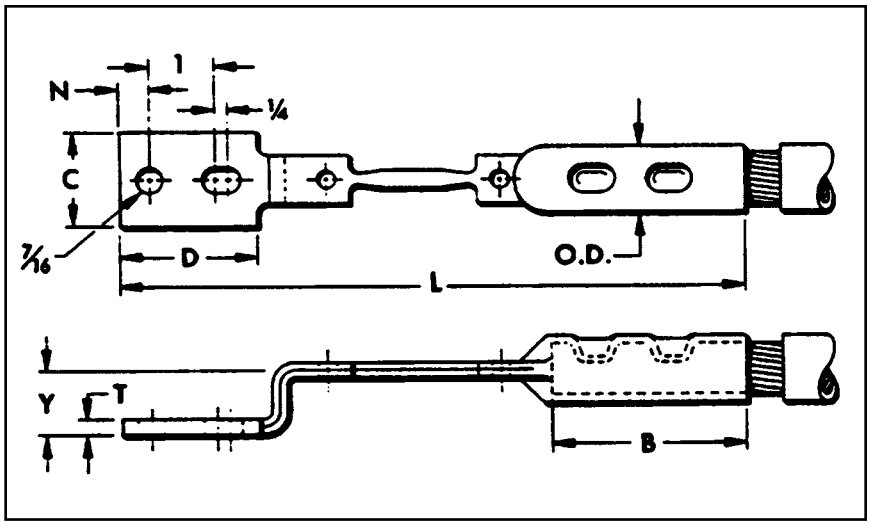

Catalog Number	Cable Size	Dimensions in Inches								Installation Information				App. Wt. in Lbs.
										HYPRESS™ & Indentor Die			No. of Indents	
		B	C	D	L	N	T	Y	O.D.	Y34A with Y34PR	Y34BH with Y34PR	Y44B with Y44PR		
										Nest Die				
YFAP28L2	4/0 Str.	3.50	1.00	2.19	10.44	0.44	0.14	0.89	0.69	A28D	B28D	E28D	1	0.36
YFAP29L2	250 kcmil	3.56	1.12	2.18	10.44	0.44	0.16	0.89	0.75	A29D	B29D	E29D	1	0.42
YFAP30L2	300 kcmil	3.63	1.18	2.31	11.19	0.50	0.16	1.10	0.76	A3OD	B3OD	E3OD	2	0.52
YFAP31L2	350 kcmil	3.63	1.38	2.31	11.38	0.50	0.18	1.08	0.82	A310	B31D	E31D	2	0.58
YFAP32L2	400 kcmil	3.75	1.38	2.31	11.50	0.50	0.19	1.10	0.89	A32D	B320	E32D	2	0.70
YFAP34L2	500 kcmil	4.13	1.54	2.75	12.25	0.50	0.23	1.11	0.98	A34D	No Nest Die Req'd.	E34D	2	1.00
YFAP39L2	750 kcmil	4.13	1.91	2.75	12.31	0.50	0.27	1.14	1.20	—	—	E39D	2	1.50

For further information call customer service.

TYPES YFM-CR, YFM-CP

MOLIMITER™ ASSEMBLY

With Ceramic Shell and
Rubber Sleeve for Insulated Cables

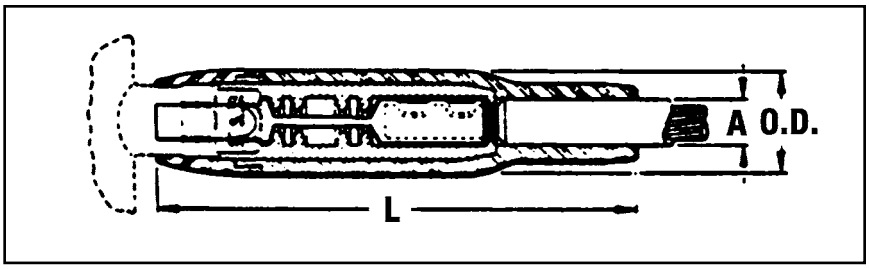

The MOLIMITER™ is used for fusing underground cables at junction points. The unit is designed for use with the BURNDY® MOLE™ and provides Limiter protection for cables. which terminate at the MOLE™. The cable end is installed in the MOLIMITER™ cable socket (see Installation Information in table below) and then the MOLE™ end is installed in the MOLE™ outlet Socket and Nut assembly. Any MOLIMITER which has burned clear may be quickly replaced. For time current characteristics see the technical section.

For Use on Rubber Insulated Cable	For Use on Paper Insulated Cable-Oil Tight Cable Socket	Cable Size	Dimensions in Inches			For Connection to MOLE™ Use		MOLE™ Outlet Size	Installation Information				App. Ship Wt. in Lbs.
			(Max. Cable Dia. Over Insul.) A	L	O.D.	Socket and Nut Assembly	Z Cone		HYPRESS™ & Indentor Die			No. of Indents	
Catalog No.	Catalog No.								Y34A with Y34PR	Y34BH with Y34PR	Y44B with Y44R		
									Nest Die				
YFM28CR	**YFM28CP**	4/0 Str.	1.34	11.69	2.38	Z28NR	Z2828	A	A28D	B28D	E28D	1	1.10
YFM29CR	**YFM29CP**	250 kcmil	1.34	11.69	2.38	Z29NR	Z2929	A	A29D	B29D	E29D	1	1.10
YFM30CR	**YFM30CP**	300 kcmil	1.34	11.69	2.38	Z30NR	Z3030	A	A30D	B30D	E30D	2	1.70
YFM31CR	**YFM31CP**	350 kcmil	1.34	11.69	2.38	Z31NR	Z3131	A	A31D	B31D	E31D	2	1.80
YFM32CR	**YFM32CP**	400 kcmil	1.34	11.69	2.38	Z32NR	Z3232	A	A32D	B32D	E32D	2	1.90
YFM34CR	**YFM34CP**	500 kcmil	1.34	11.69	2.38	Z34NR	Z3434	A	A34D	No Nest Die Req'd.	E34D	2	2.60
YFM39CR	**YFM39CP**	750 kcmil	1.50	12.19	2.56	Z39NR	Z3939	B	—	—	E39D	2	3.40

TYPE YFM-CPL

LONG MOLIMITER™ ASSEMBLY

With Ceramic Shell and Rubber
Sleeve for Paper-Lead Cables

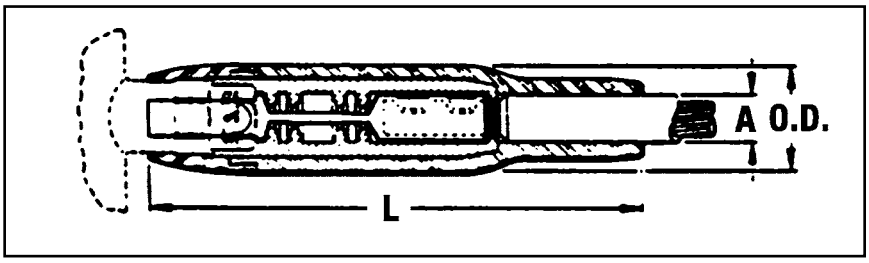

The Long MOLIMITER™ differs from the standard MOLIMITER™ only in its extra long cable socket. This socket, with the end seam sealed oil tight, is preferred by some for use on paper insulated cables. Time-current characteristics are shown in the technical section. For proper HYPRESS™ installation, see table below.

Catalog Number	Cable Size	Dimensions in Inches			For Connection to MOLE™ Use		MOLE™ Outlet Size	Installation Information				App. Ship Wt. in Lbs.
		(Max. Cable Dia. Over Insul.) A	L	O.D.	Socket & Nut Assembly	Z Cone		HYPRESS™ & Indentor Die			No. of Indents	
								Y34A with Y34PR	Y34BH with Y34PR	Y44B with Y44R		
								Nest Die				
YFM28CPL	4/0 Str.	1.34	11.69	2.38	Z28NR	Z2828	A	A28D	B28D	E28D	1	1.00
YFM29CPL	250 kcmil	1.34	11.69	2.38	Z29NR	Z2929	A	A29D	B29D	E29D	1	1.00
YFM30CPL	300 kcmil	1.34	11.69	2.38	Z30NR	Z3030	A	A30D	B30D	E30D	2	1.70
YFM31CPL	350 kcmil	1.34	11.69	2.38	Z32NR	Z3132	A	A31D	B31D	E31D	2	1.70
YFM32CPL	400 kcmil	1.34	11.69	2.38	Z32NR	Z3232	A	A32D	B32D	E32D	2	1.80
YFM34CPL	500 kcmil	1.34	11.69	2.38	Z34NR	Z3434	A	A34D	B34D	E34D	2	2.50
YFM39CPL	750 kcmil	1.50	12.19	2.56	Z34NRB	Z3434	B	—	—	E39D	2	3.20

For conductor sizes not listed call customer service.

Blue highlighted items are industry standard and most frequently ordered.

TYPES YFMR, YFMP

MOLIMITER™

For Use with Long MOLIMITER™ Assembly

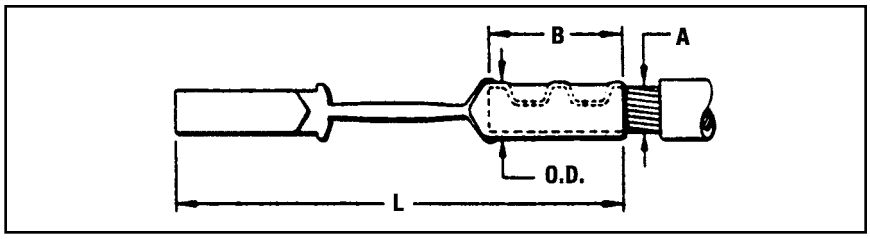

The MOLIMITER™ combines an accurately determined fusible section with both a MOLE™ Socket end and a cable socket. Designed to clear on overloads that would injure the cable insulation, the MOLIMITER™ may be easily and quickly replaced. For time current characteristics of MOLIMITER see the technical section. For proper HYPRESS™ installation, see table below.

For Use on Rubber Insulated Cable	For Use on Paper Insulated Cable-Oil Tight Cable Socket	Cable Size A	Dimensions in Inches			For Connection to MOLE™ Use		MOLE™ Outlet Size	Installation Information				App. Wt. in Lbs.
			B	L	O.D.	Socket and Nut Assembly	Z Cone		HYPRESS™ & Indentor Die			No. of Indents	
									Y34A with Y34PR	Y34BH with Y34PR	Y44B with Y44PR		
Catalog No.	Catalog No.								Nest Die				
YFMR28	**YFMP28**	4/0 Str.	1.86	6.28	0.83	Z28NR	Z2828	A	A28D	B28D	E28D	1	0.21
YFMR29	**YFMP29**	250 kcmil	1.88	6.19	0.84	Z29NR	Z2929	A	A29D	B29D	E29D	1	0.25
YFMR30	**YFMP30**	300 kcmil	2.00	6.81	0.96	Z30NR	Z3030	A	A30D	B30D	E30D	2	0.31
YFMR31	**YFMP31**	350 kcmil	2.00	6.94	0.91	Z32NR	Z3132	A	A31D	B31D	E31D	2	0.38
YFMR32	**YFMP32**	400 kcmil	2.14	7.27	0.97	Z32NR	Z3232	A	A32D	B32D	E32D	2	0.43
YFMR34	**YFMP34**	500 kcmil	2.75	8.26	1.13	Z34NR	Z3434	A	A34D	No Nest Die Req'd.	E34D	2	0.79
YFMR39	**YFMP39**	750 kcmil	2.88	8.75	1.38	Z34NRB	Z3434	B	—	—	E39D	2	1.10

TYPE YFMP-L

LONG MOLIMITER™ ASSEMBLY

For Use with Long MOLIMITER™ Assembly

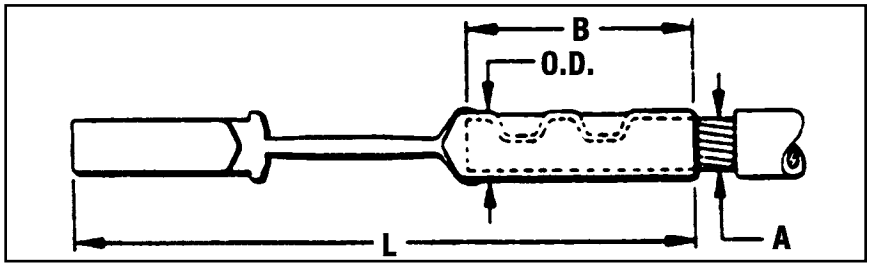

Similar to Type YFMR and YFMP except for a long oil tight cable socket preferred by some users of paper-insulated cable. Fusing characteristics shown in the technical sections. For proper HYPRESS™ installation, see table below

Catalog No.	Cable Size	Dimensions in Inches			For Connection to MOLE™ Use		MOLE™ Outlet Size	Installation Information				Ship Wt. in Lbs.
		B	L	O.D.	Socket & Nut Assembly	Z Cone		HYPRESS™ & Indentor Die			No. of Indents	
								Y34A with Y34PR	Y34BH with Y34PR	Y44B with Y44R		
								Nest Die				
YFMP28L	4/0 Str.	3.06	7.25	0.69	Z28NR	Z2828	A	A28D	B28D	E28D	1	0.27
YFMP29L	250 kcmil	3.56	7.88	0.75	Z29NR	Z2929	A	A29D	B29D	E29D	1	0.32
YFMP30L	300 kcmil	3.67	8.48	0.81	Z30NR	Z3030	A	A3OD	B30D	E30D	2	0.39
YFMP31L	350 kcmil	3.69	8.66	0.88	Z32NR	Z3132	A	A31D	B31D	E31D	2	0.48
YFMP32L	400 kcmil	3.81	8.66	0.95	Z32NR	Z3232	A	A32D	B32D	E32D	2	0.54
YFMP34PL	500 kcmil	4.13	9.44	1.06	Z34NR	Z3434	A	A34D	No Nest Die Req'd.	E34D	2	0.94
YFMP39PL	750 kcmil	4.19	10.38	1.31	Z34NRB	Z3434	B	—	—	E39D	2.32	1.30

For conductor sizes not listed call customer service.

To specify a fast acting limiter in any configuration insert an "F" before the conductor number (e.g.YFSF34CR specifies a 1/2 thick limiter section).

Blue highlighted items are industry standard and most frequently ordered.

TYPE VYFT

LIMITER TAP ASSEMBLY

For Insulated Cables

The Limiter Tap is suitable for making Limiter connections to a cable ring bus in a manhole or transformer vault. It can be installed on oilimpregnated, paper insulated, or rubber insulated cable. Fusing characteristics of the Limiter are the same as Type YFA shown in the technical section. The rubber sleeve and insulating hood reduce taping to a minimum. Catalog Numbers shown include hoods. If no hood is required, eliminate one "C" from the Catalog Number. Replaceable Link Limiter Taps can be ordered. For proper HYPRESS™ installation, see table below.
Paper-Lead Cables If a long cable socket is preferred for use on paper insulated cable add "L" to the catalog number (e.g., VYFT3428CCP becomes VYFT3428CCPL).

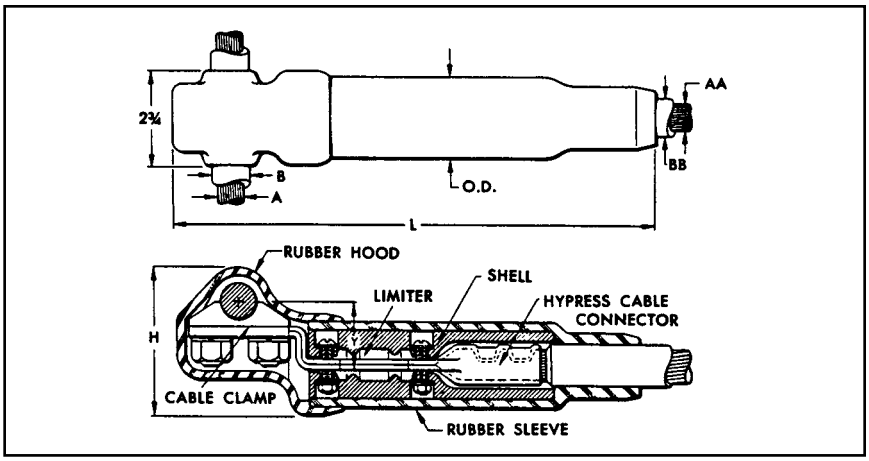

For Use on Rubber Insulated Cable	For Use on Paper Insulated Cable-Oil Tight Cable Socket	A Run	AA Tap	Dimensions in Inches						Installation Information			App. Ship Wt. in Lbs.
										HYPRESS™ & Indentor Die		No. of Indents	
				B Max. Cable Dia. Over Insul.	BB Max. Cable Dia. Over Insul.	H	L	Y	O.D.	Y34A with Y34PR	Y34BH with Y34PR		
Catalog No.	Catalog No.									Nest Die			
VYFT3428CCR	VYFT3428CCP	500 kcmil	4/0 Str.	1.09	1.00	4.00	12.19	1.75	1.94	A28D	B28D	1	2.20
VYFT3434CCR	VYFT3434CCP	500 kcmil	500 kcmil	1.09	1.34	4.00	14.19	1.75	2.38	A34D	No Nest Die Req'd.	2	3.50
VYFT3934CCR	VYFT3934CCP	750 kcmil	500 kcmil	1.31	1.34	4.00	14.19	1.75	2.38	A34D		2	3.70
VYFT4434CCR	VYFT4434CCP	1000 kcmil	500 kcmil	1.08	1.34	4.13	14.19	2.09	2.38	A34D		2	4.00

To specify a fast acting limiter in any configuration insert an "F" before the conductor number (e.g., YFSF34CR specifies a 1/2 thick limiter section).

TYPE NYFT

LIMITER TEE TAP

For Rubber or Paper Insulated Cables

The NYFT Limiter is similar to Type VYFT except the run conductor is clamped with a four bolt cap and the Limiter Tap is removable by means of a socket and nut assembly. The Limiter current characteristics are the same as Type YFA shown in the technical section.

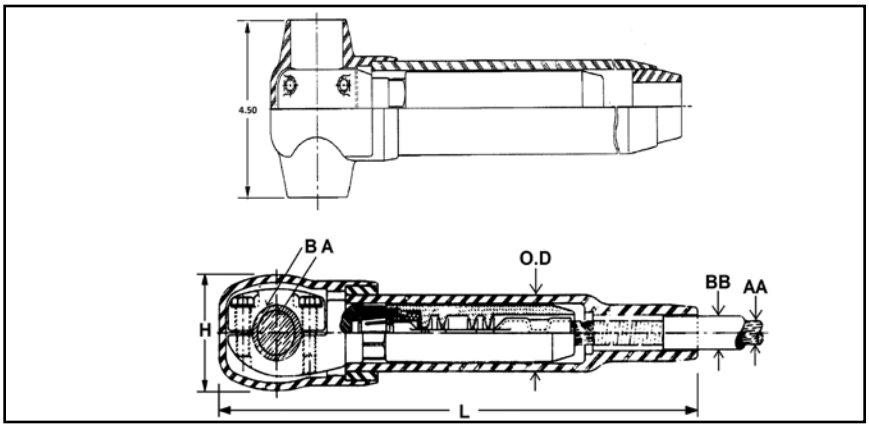

For Use on Rubber Insulated Cable	For Use on Paper Insulated Cable-Oil Tight Cable Socket	A Run	AA Tap	Dimensions in Inches					Installation Information			App. Ship Wt. in Lbs.
									HYPRESS™ & Indentor Die		No. of Indents	
				B Max. Cable Dia. Over Insul.	BB Max. Cable Dia. Over Insul.	H	L	O.D.	Y34A with Y34PR	Y34BH with Y34PR		
Catalog No.	Catalog No.								Nest Die			
NYFT3434CCR	NYFT3434CCP	500 kcmil	500 kcmil	1.89	1.25	2.91	16.78	2.41	A34D	No Nest Die Req'd.	2	2.20

Blue highlighted items are industry standard and most frequently ordered.

TYPE LYS

REPLACEABLE LINK LIMITER

With Ceramic Shell and Rubber Sleeve for Insulated Cables

The Replaceable Link Limiter incorporates the functions of both fuse and coupler. For use with rubber and paper-insulated cable, it is designed to facilitate rapid and inexpensive replacement of Limiter Links upon clearing. It also permits, if desired, the use of a Link rated for a lower ampere capacity than supplied with our standard Limiter. For proper HYPRESS™ installation, see table below.

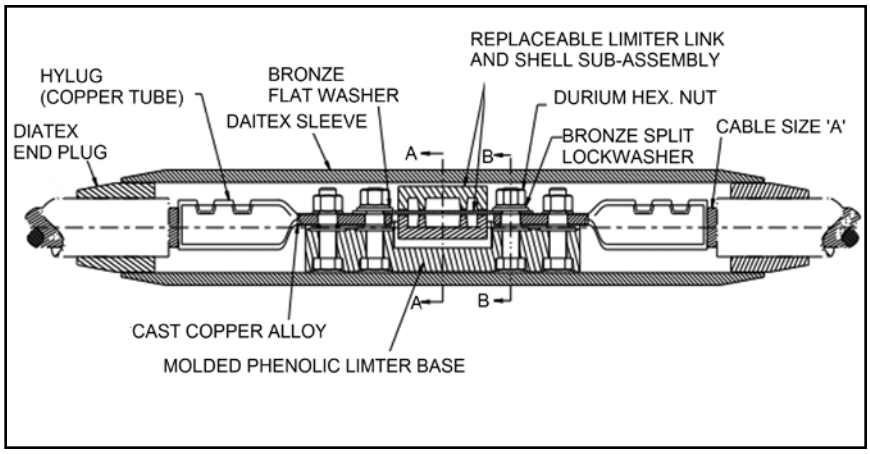

Catalog Number	Cable Size	** (Max. Cable Dia. Over Insul. Inches) A	Number of Indents in Cable Socket	* Link Supplied		Installation Information				App. Ship Wt. in Lbs.
						HYPRESS™ & Indentor Die			No. of Indents	
				Ampere Capacity	Catalog Number	Y29B with Y29PR	Y34A with Y34PR	Y34BH with Y34PR		
						Nest Die				
LYS4CC	#4 Str.	0.50	1	75A	**LF1010**	D4CL	A4CD	B4CD	1	2.10
LYS2CC	#2 Str.	0.75		100A	**LF1014**	D2CL	A2CD	B2CD		2.20
LYS1CC	#1 Str.				**LF1014**	D1CL	A1CD	B1CD		
LYS25C	1/0 Str.			150A	**LF1025**	D25L	A25D	B25D		
LYS26C	2/0 Str.				**LF1025**	D26L	A26D	B26D		2.30
LYS27C	3/0 Str.	1.00		200A	**LF2019**	D27L	A27D	B27D		
LYS28C	4/0 Str.			250A	**LF2027**	D28L	A28D	B28D		2.40
LYS29C	250 kcmil				**LF2027**	D29L	A29D	B29D		
LYS30C	300 kcmil	1.25	2	300A	**LF2038**	—	A30D	B30D	2	2.50
LYS31C	350 kcmil				**LF2038**	—	A31D	B31D		2.60
LYS32C	400 kcmil			400A	**LF2065**	—	A32D	B32D		2.70
LYS34C	500 kcmil					—	A34D	No Nest Die Req'd.		3.10

* Fuse link supplied is selected on the basis of a minimum blowing current of approximately twice the NEC rubber insulated cable rating. Refer to Time Current curves shown and specify if another size is desired.

** The standard end bushing supplied is for maximum cable insulation diameters as shown. Compact cable will require a bushing with a smaller inside diameter to accommodate the smaller insulation diameter of the cable. If other than standard bushing is required, contact customer service.

To specify a fast acting limiter in any configuration insert a "F" before the conductor number (e.g., YFSF34CR specifies a 1/2 thick limiter section).

TYPE LYM

REPLACEABLE LINK MOLIMITER™

With Ceramic Shell and Rubber Sleeve for Insulated Cables

The Replaceable Link MOLIMITER™ is used to fuse underground cables at junction points with the BURNDY® MOLE. The "Replaceable Link" feature permits the selection of one of several links. In addition, the replacement of links that have burned clear is both rapid and inexpensive. For use with both rubber and paper insulated cables. The MOLE™ end of the MOLIMITER™ is installed in the MOLE™ Socket and Nut Assembly, while the cable socket end is HYPRESS™ installed, see table below for proper installation.

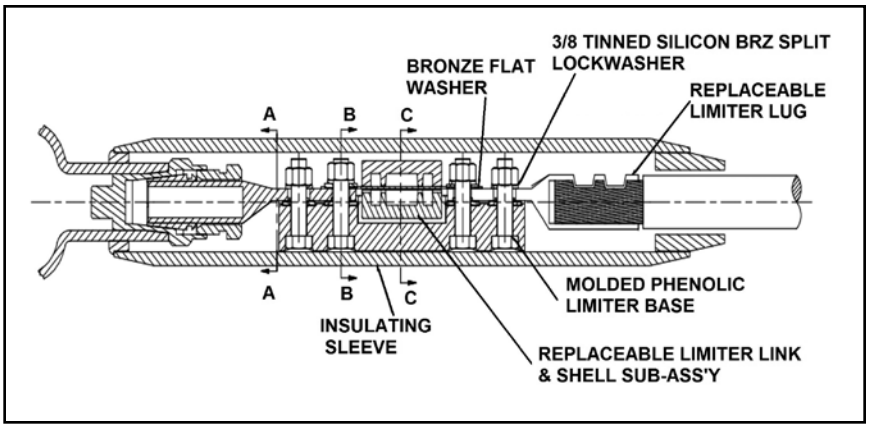

Catalog Number	Cable Size	** (Max. Cable Dia. Over Insul. Inches) A	Number of Indents in Cable Socket	* Link Supplied		For Connection to MOLE™ Use		Installation Information				App. Ship Wt. in Lbs.
						Socket & Nut Assembly	Z Cone	HYPRESS™ & Indentor Die			No. of Indents	
				Ampere Capacity	Catalog Number	Catalog Number	Catalog Number	Y29B with Y29PR	Y34A with Y34PR	Y34BH with Y34PR		
								Nest Die				
LYM2CC	2 Str.	0.75	1	100A	**LF1014**	Z28NR	Z2828	D2CL	A2CD	B2CD	1	2.00
LYM1CC	1 Str.				**LF1014**			D1CL	A1CD	B1CD		2.10
LYM25C	1/0 Str.			150A	**LF1025**			D25L	A25D	B25D		
LYM26C	2/0 Str.				**LF1025**			D26L	A26D	B26D		
LYM27C	3/0 Str.	1.00		200A	**LF2019**			D27L	A27D	B27D		
LYM28C	4/0 Str.			250A	**LF2027**			D28L	A28D	B28D		
LYM29C	250 kcmil				**LF2027**	Z29NR	Z2929	D29L	A29D	B29D		2.20
LYM30C	300 kcmil	1.25	2	300A	**LF2038**	Z30NR	Z3030	—	A30D	B30D	2	2.30
LYM31C	350 kcmil				**LF2038**	Z32NR	Z3132	—	A31D	B31D		2.50
LYM32C	400 kcmil			400A	**LF2065**	Z32NR	Z3232	—	A32D	B32D		2.60
LYM34C	500 kcmil				**LF2065**	Z34NR	Z3434	—	A34D	B34D		2.90

* Fuse link supplied is selected on the basis of a minimum blowing current of approximately twice the NEC rubber insulated cable rating. Refer to Time Current curves shown and specify if another size is desired.

** The standard end bushing supplied is for maximum cable insulation diameters as shown. Compact cable will require a bushing with a smaller inside diameter to accommodate the smaller insulation diameter of the cable. If other than standard bushing is required, contact customer service.

TYPE LF

LIMITER LINK

For Use with All Replaceable Limiters

Made of pure copper, the Limiter Link is controlled dimensionally to close tolerances to maintain accurate fusing chracteristics. Refer to Time-Current Characteristic curve shown below and specify rating desired. The Limiter Link is supplied enclosed in a shell with heatproof chamber to confine and break the arc created by fusing.

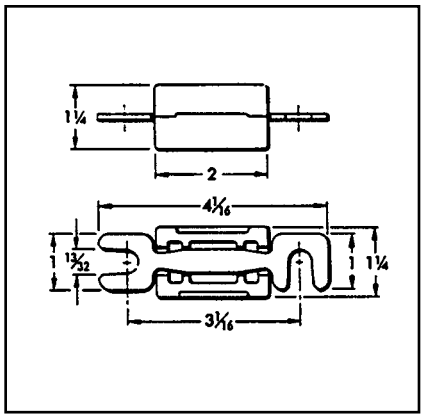

*Catalog Number	Ampere Capacity	App. Ship Wt. in Lbs.
LF1006	50A	0.08
LF1010	75A	0.08
LF1014	100A	0.08
LF1025	150A	0.08
LF2019	200A	0.09
LF2027	250A	0.09
LF2038	300A	0.11
LF2065	400A	0.12
LF2108	500A	0.15

* For use with LYS and LYM.

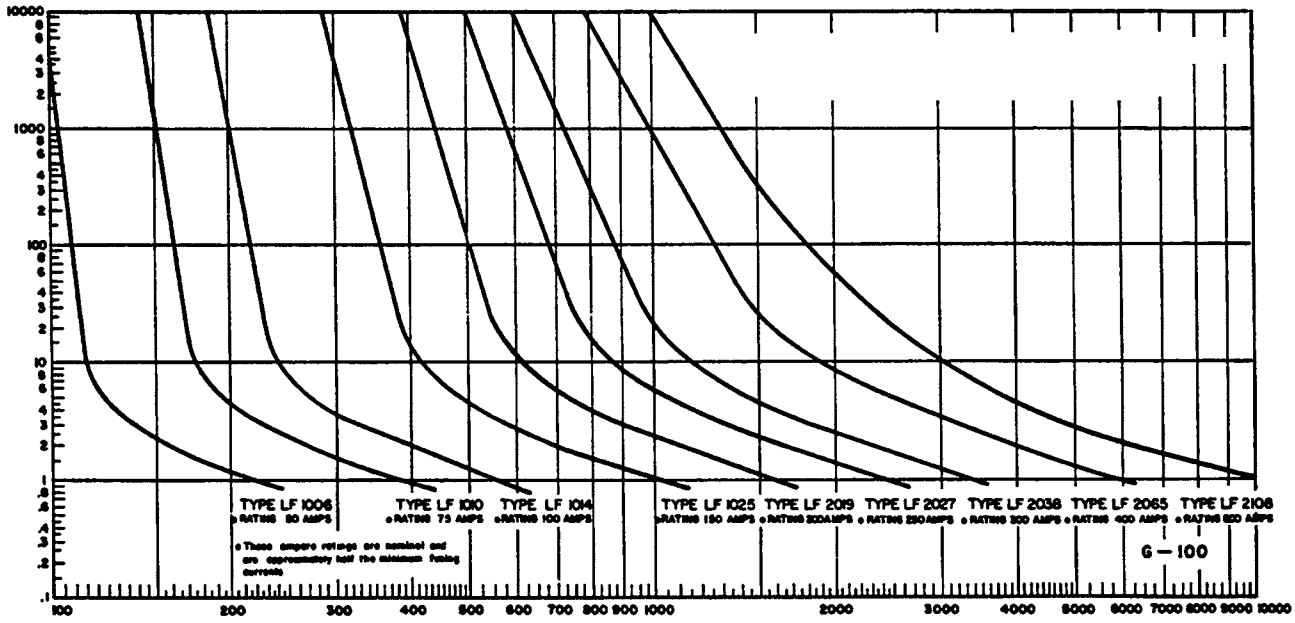

Current in Amperes

Time-Current Fusing Characteristics of Type LF Limiter Links

The nominal current ratings of these Limiter Links are approximately one-half the minimum currents required to clear the fuses. The gneral slope and shape of the curves are similar to those of the time-current curves of the Limiters. The Type LF Limiter Links are made of pure copper with dimensions carefully controlled in order to maintain accurate fusing characteristics.

Blue highlighted items are industry standard and most frequently ordered.

TYPE LYBASE

LIMITER BASE

For Use with all Replaceable Limiters

A heat resisting, high impact, molded phenolic base for mounting HYDENT™ Cable lugs or MOLIMITER™-lugs. The bases are supplied with bolts fitted in place with retaining rings, enabling the lugs to be easily assembled to BURNDY® Replaceable Limiter Links. They may be purchased separately for use with all Replaceable Limiters.

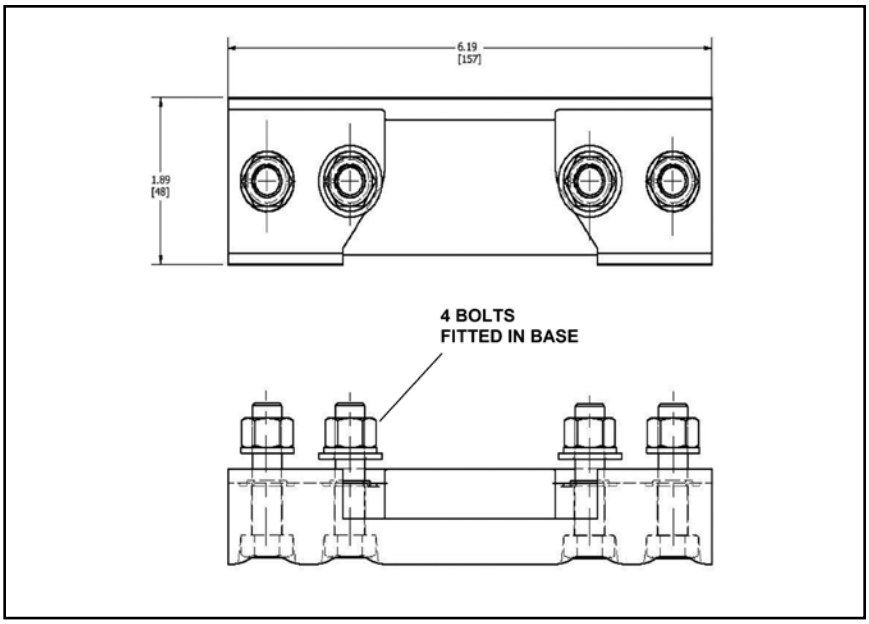

Catalog Number	For Use with	App. Ship Wt. in Lbs.
LYBASE	LYM	0.32
	LYS	

TYPE LYS34P2

LIMITER SLEEVE

For Use With Replaceable Limiters

A molded sleeve for insulating the Replaceable Limiter and MOLIMITER™ assemblies. Similar to other component parts, the insulating sleeves may be purchased separately. These sleeves are used in conjunction with the LYS-P6 bushings.

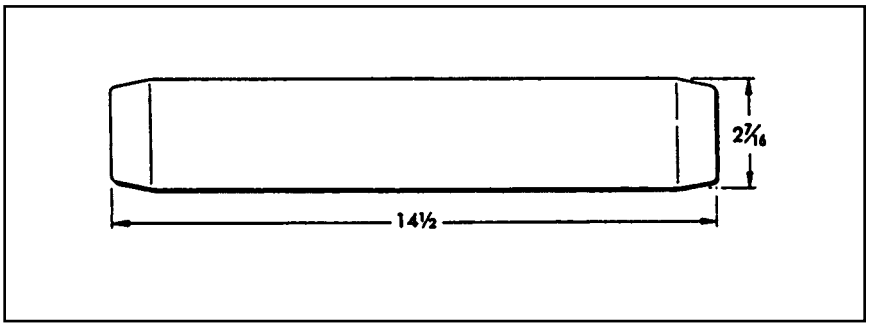

Catalog Number	For Use with	App. Ship Wt. in Lbs.
LYS34P2	LYS	1.20
	LYM	

TYPE LYS-P5

HYLUG™

For Use with Replaceable Limiters

Fabricated of high copper alloy, this terminal has a sealed cable socket for use with paper insulated, oil-impregnated cables as well as rubber-insulated cables. Tin plated to retard corrosion and prevent discoloration. The HYLUG™ is for use with LYS and LYM.

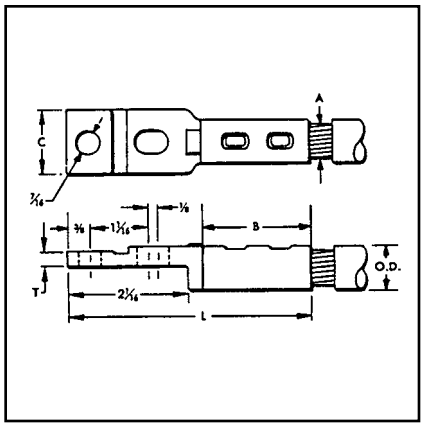

Catalog Number	Cable Size A	Dimensions in Inches					Installation Information				App. Ship Wt. in Lbs.
							HYPRESS™ & Indentor Die			No. of Indents	
		B	C	L	T	O.D.	Y29B with Y29PR	Y34A with Y34PR	Y34B with Y34PR		
							Nest Die				
LYS6CP5	#6 Str.	1-1/4	3/4	3-9/16	3/16	5/16	D6CL	A6CD	B6CD	1	0.16
LYS4CP5	#4 Str.			3-5/8		11/32	D4CL	A4CD	B4CD		0.16
LYS2CP5	#2 Str.	1-9/32		3-3/4		13/32	D2CL	A2CD	B2CD		0.17
LYS1CP5	#1 Str.	1-3/8		3-29/32		15/32	D1CL	A1CD	B1CD		0.20
LYS25P5	1/0 Str.			3-15/16		17/32	D25L	A25D	B25D		0.22
LYS26P5	2/0 Str.	1-1/2	13/16	4-1/16		9/16	D26L	A26D	B26D		0.24
LYS27P5	3/0 Str.		29/32			5/8	D27L	A27D	B27D		0.28
LYS28P5	4/0 Str.	1-5/8	1-1/8	4-3/16		11/16	D28L	A28D	B28D		0.31
LYS29P5	250 kcmil				1/4	3/4	D29L	A29D	B29D		0.37
LYS30P5	300 kcmil	2	1-3/8	4-9/16		13/16	—	A30D	B30D	2	0.42
LYS31P5	350 kcmil		1-9/16			7/8		A31D	B31D		0.53
LYS32P5	400 kcmil	2-1/8		4-11/16		31/32		A32D	B32D		0.61
LYS34P5	500 kcmil	2-1/4		4-13/16		1-1/16		A34D	No Nest Die Req'd.		0.70

TYPE LYM34P3

BUSHING

For Use with Replaceable Limiters

Type LYM34P3 is for assembly of Replaceable MOLIMITERS™ to the MOLE™ outlet. It fills the space between Limiter sleeve and the MOLE™ outlet to allow easy taping.

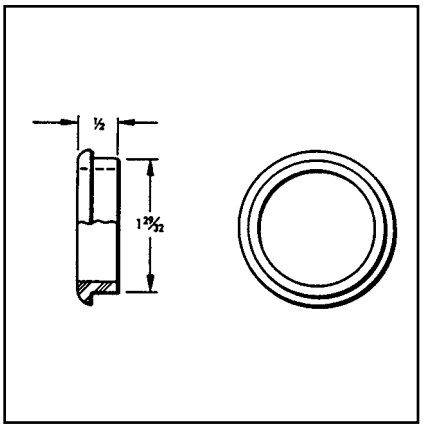

Catalog Number	For Use with	MOLE™ Outlet Size	App. Ship Wt. in Lbs.
LYM34P3	LYM	A	0.01
	LZM		

TYPE LYS-P6

BUSHING

For Use with Replaceable Limiters

The LYS-P6 bushing is designed to fit closely over the cable insulation when used with the LYS34P2 Limiter sleeve. It fills the space between the Limiter sleeve and cable. The tapered bushing facilitates taping at installation.

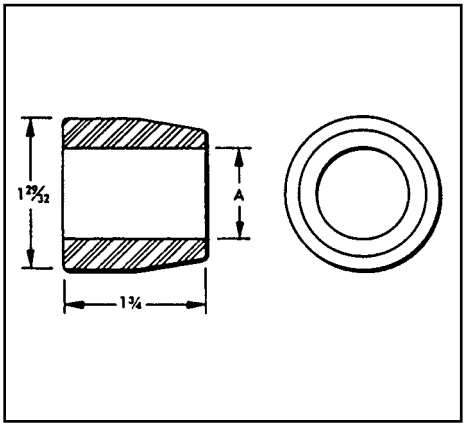

Catalog Number	(Max. Cable Dia. Over Insul.) A	For Use with	App. Ship Wt. in Lbs.
LYS32P6	1/2	LYS LYM	0.19
LYS48P6	3/4		0.19
LYS64P6	1		0.16
LYS80P6	1-1/4		0.12

Blue highlighted items are industry standard and most frequently ordered.

TYPES Y, Z

NETWORK PROTECTOR FUSES AND CERAMIC ENCLOSURES

Type Z Network Protector Fuses are designed to coordinate with teh fusible sections of the Limiters as well as the Protector characteristic itself. A Ceramic enclosure is designed especially to form an arcing chamber for these fuses and contains no asbestos. The hole spacings in the tongues of these fuses are such that they will fit standard Network Protectors. See Time Current characteristic curve below. The Fuse element and the housing must be purchased separately.

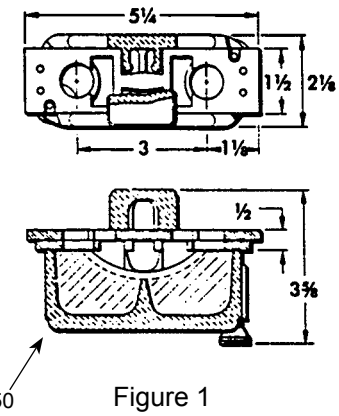

Figure 1
Type Y-Fuse

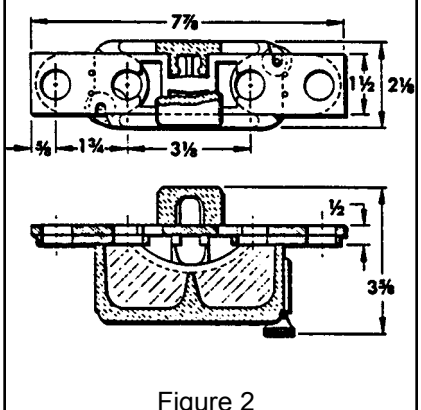

Figure 2
Type Z-Fuse

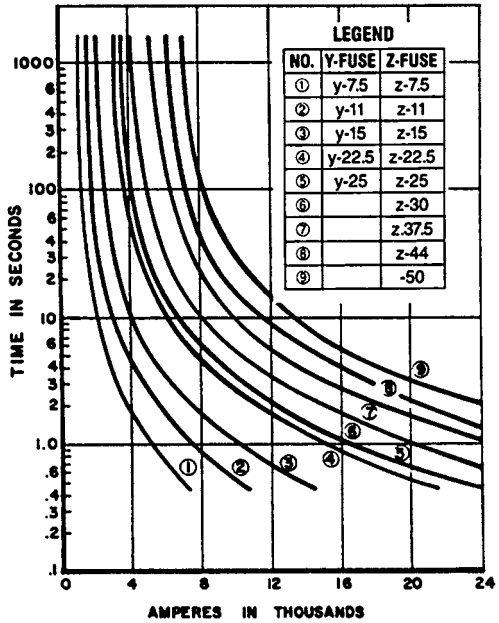

Fuse Designation Catalog Number				Transformer Full Load (Normal) Amperes	Ceramic Enclosure
Y-Fuse Fig. 1	App. Ship. Wt. in Lbs.	Z-Fuse Fig.2	App. Ship. Wt. in Lbs.		
Y-7.5	0.45	**Z-7.5**	0.95	400	
Y-11	0.46	**Z-11**	0.96	600	
Y-15	0.48	**Z-15**	0.98	800	
Y-22.5	0.50	**Z-22.5**	1.00	1200	
Y-25	0.63	**Z-25**	1.13	1333	**ZH50**
—	0.75	**Z-30**	1.25	1600	
Y-37.5	0.78	**Z-37.5**	1.28	2000	
—	—	**Z-44**	1.29	2500	
Y-50	0.80	**Z-50**	1.30	3000	

Blue highlighted items are industry standard and most frequently ordered.

NYT

T-CONNECTOR

Cable Run — Cable Tap

A "T" connector designed to provide a clamp type element on the run and a permanent HYPRESS™ connection on the tap. Recommended for use on ring buses or for applications where occasional disconnects from the run conductor are desired without disturbing the tap connection. Tin plated. For proper installation of tap cable, see table below.

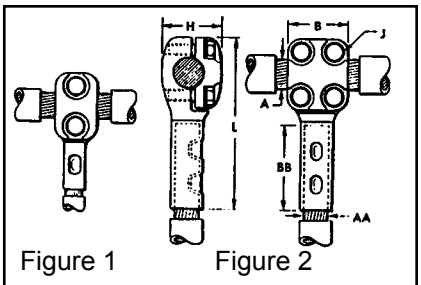

Figure 1 Figure 2

Catalog Number	Conductor Size		Fig. No.	Dimensions in Inches					Installation Information					App. Ship. Wt. in Lbs.
									HYPRESS™ and Indentor Die				No. of Indents	
									Y29B with Y29PR	Y34A with Y34PR	Y34B with Y34PR	Y44B with Y44PR		
	Run A	Tap AA		B	BB	H	J	L	Nest Die					
NYT282C	4/0 AWG	2/0 AWG	1	1-3/8	1-1/4	1-3/8	3/8	3-3/16	D2CL	A2CD	B2CD	—	1	1.50
NYT2825		1/0	1	1-3/8	1-3/8	1-3/8	3/8	4	D25L	A25D	B25D	—	1	1.50
NYT2826		2/0 AWG	1	1-3/8	1-1/2	1-3/8	3/8	4-1/8	D26L	A26D	B26D	—	1	1.50
NYT2828		4/0 AWG	2	2	1-5/8	1-3/8	3/8	4-5/16	D28L	A28D	B28D	E28D	1	2.20
NYT292C	250 kcmil	2/0 AWG	1	1-3/8	1-1/4	1-7/16	3/8	3-3/16	D2CL	A2CD	B2CD	—	1	1.50
NYT2925		1/0	1	1-3/8	1-3/8	1-7/16	3/8	4-1/16	D25L	A25D	B25D	—	1	1.50
NYT2926		2/0 AWG	1	1-3/8	1-1/2	1-7/16	3/8	4-3/16	D26L	A26D	B26D	—	1	1.50
NYT2928		4/0 AWG	2	2	1-5/8	1-7/16	3/8	4-3/8	D28L	A28D	B28D	E28D	1	2.20
NYT2929		250 kcmil	2	2	1-5/8	1-7/16	3/8	4-7/16	D29L	A29D	B29D	E29D	1	2.20
NYT3125	350 kcmil	1/0	1	1-3/8	1-3/8	1-1/2	3/8	4-1/8	D25L	A25D	B25D	—	1	1.50
NYT3126		2/0 AWG	1	1-3/8	1-1/2	1-1/2	3/8	4-5/16	D26L	A26D	B26D	—	1	1.50
NYT3128		4/0 AWG	2	2	1-5/8	1-1/2	3/8	4-1/2	D28L	A28D	B28D	E28D	1	2.20
NYT3129		250 kcmil	2	2	1-5/8	1-1/2	3/8	4-9/16	D29L	A29D	B29D	E29D	1	2.20
NYT3131		350 kcmil	2	2	2	1-1/2	3/8	5	—	A31D	B31D	E31D	2	2.50
NYT3426	500 kcmil	2/0 AWG	1	1-3/8	1-1/2	1-5/8	3/8	4-7/16	D26L	A26D	B26D	—	1	1.70
NYT3428		4/0 AWG	2	2	1-5/8	1-5/8	3/8	4-5/8	D28L	A28D	B28D	E28D	1	2.50
NYT3429		250 kcmil	2	2	1-5/8	1-5/8	3/8	4-5/8	D29L	A29D	B29D	E29D	1	2.50
NYT3431		350 kcmil	2	2	2	1-5/8	3/8	5-1/16	—	A31D	B31D	E31D	2	2.50
NYT3434		500 kcmil	2	2	2-1/4	1-5/8	3/8	5-3/8	—	A34D	No Nest Die Req'd.	E34D	2	2.50
NYT3926	750 kcmil	2/0 AWG	1	1-3/8	1-1/2	1-7/8	3/8	4-5/8	D26L	A26D	B26D	—	1	1.70
NYT3928		4/0 AWG	2	2	1-5/8	1-7/8	3/8	4-13/16	D28L	A28D	B28D	E28D	1	2.50
NYT3929		250 kcmil	2	2	1-5/8	1-7/8	3/8	4-13/16	D29L	A29D	B29D	E29D	1	2.50
NYT3931		350 kcmil	2	2	2	1-7/8	3/8	5-1/4	—	A31D	B31D	E31D	2	2.50
NYT3934		500 kcmil	2	2	2-1/4	1-7/8	3/8	5-9/16	—	A34D	No Nest Die Req'd	E34D	2	2.70
NYT3939		750 kcmil	2	2	2-7/8	1-7/8	3/8	6-1/4	—	—	—	E39D	2	3.00
NYT4426	1000 kcmil	2/0 AWG	1	1-3/8	1-1/2	2-1/8	3/8	4-3/4	D26L	A26D	B26D	—	1	1.70
NYT4428		4/0 AWG	2	2	1-5/8	2-1/8	3/8	4-15/16	D28L	A28D	B28D	E28D	1	2.50
NYT4429		250 kcmil	2	2	1-5/8	2-1/8	3/8	5	D29L	A29D	B29D	E29D	1	2.50
NYT4431		350 kcmil	2	2	2	2-1/8	3/8	5-7/16	—	A31D	B31D	E31D	2	2.50
NYT4434		500 kcmil	2	2	2-1/4	2-1/8	3/8	5-3/4	—	A34D	No Nest Die Req'd.	E34D	2	2.70
NYT4439		750 kcmil	2	2	2-7/8	2-1/4	3/8	6-3/8	—	—	—	E39D	2	3.00
NYT4444		1000 kcmil	2	2-11/16	3	2-5/16	1/2	7	—	—	—	No Nest Die Req'd.	2	3.20
NYT4628	1500 kcmil	4/0 AWG	2	2	1-5/8	2-11/16	3/8	5-3/8	D28L	A28D	B28D	E28D	1	4.70
NYT4629		250 kcmil	2	2	1-5/8	2-11/16	3/8	5-7/16	D29L	A29D	B29D	E29D	1	4.70
NYT4631		350 kcmil	2	2	2	2-11/16	3/8	5-7/8	—	A31D	B31D	E31D	2	4.70
NYT4634		500 kcmil	2	2	2-1/4	2-11/16	3/8	6-3/16	—	A34D	No Nest Die Req'd.	E34D	2	4.70
NYT4639		750 kcmil	2	2	2-7/8	2-11/16	3/8	6-3/4	—	—	—	E39D	2	5.20
NYT4644		1000 kcmil	2	2	3	2-3/4	1/2	7-1/8	—	—	—	No Nest Die Req'd.	2	7.50
NYT4646		1500 kcmil	2	2-11/16	3-3/16	2-3/4	1/2	7-11/16	—	—	—	C46D	2	8.00

* Y48B HYPRESS™ with Y48PR indentor.

Blue highlighted items are industry standard and most frequently ordered.

HIGH CAPACITY LIMITER - 200,000 AMPERES AT 600 VOLTS

The BURNDY® High Capacity Limiter is designed to economically protect electrical distribution systems from the destructive effect of high energy faults. The increasing number of 600 volt secondary network installations for industrial and commercial applications demand a cable limiter that can safely interrupt 200,000 amperes (symmetrical available) and one that will also completely coordinate with the higher voltage network protector fuses.

Available fault currents as high as 200,000 amperes rms at 600 volts across teh fusible elements have been interrupted during tests on the BURNDY® High Capacity Limiter. The power factor during these tests was less than 15%, thereby imposing the most difficult clearing conditions. No external disturbance is experienced upon clearing falt currents from the "float" value to 200,000 amperes. The quartz tiller absorbs the intense energy generated by interrupting the fault current. The quartz fuses into tubular fulgurites, with a high dielectric strength, and forms an insulating barrier between the melted link sections. This action prevents restrike of the internal arc. The rugged aluminum housing and cast epoxy end seals provide a vessel that completely contains the developed energy.

The carefully developed time-current characteristcs and rigid manufacturing tolerances assure proper coordination with the network protector fuses and the insulaiton damage characteristics of 4/0, 250, 350, 500 kcmil and 750 cable.

The High Capacity Limiter is available in four variations to accommodate a variety of installation practices. The Type HYS cable sockets at both ends, which allow for indenting to the cable ends with a hydraulic BURNDY® HYPRESS™. The HYA has an off-set lug on one end which permits back-to-back mounting on bus bar. They HYA also allows cable to installation with no off-set.

For those installations where BURNDY® MOLE™ connections are used for manhole junctions or transformer vault buses, the Type HYM permits a replaceable connection of the limiter director to the MOLE™ outlet at one end and a compression cable connection at the other.

Modern electrical distribution systems require low cost protection to safeguard costly equipment and quickly isolate faults, so that the undamaged portions of the system may function normally. BURNDY® High Capacity Limiters assure positive, economical protection when installed in properly designed systems.

NOTE: Today's fault currents are growing. If you need higher fault current ratings, please contact the factory.

HIGH CAPACITY LIMITER

200,000 AMPERES AT 600 VOLTS

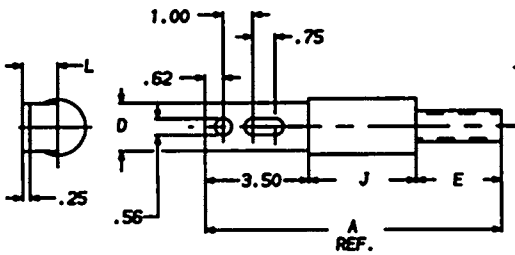

Offset Bus to Cable
Type **HYAO**
Figure 1

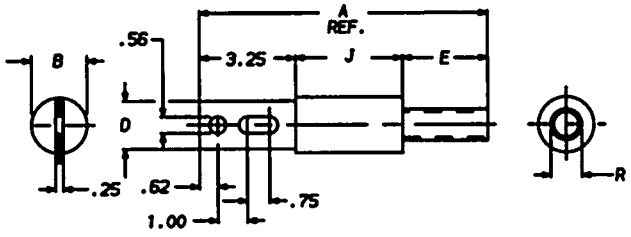

Bus to Cable
Type **HYA**
Figure 2

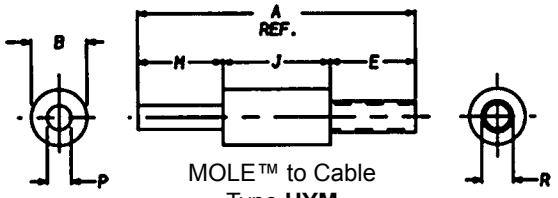

MOLE™ to Cable
Type **HYM**
Figure 3

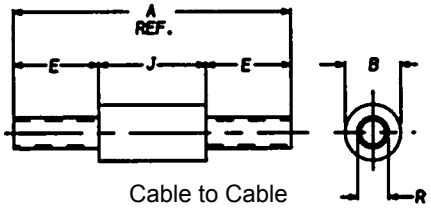

Cable to Cable
Type **HYS**
Figure 4

④ Catalog Number	Cable Size	Fig. No.	A		B		D		E		J		L		M		P		R		Die Index	Die	No. of Crimps per End
			In	mm	In	mm	In	mm	In	mm	In	mm	In	mm	In	mm	In	mm	In	mm			
HYAO_28	4/0	1	8.87	225	1.44	37	1.12	28	1.75	44	3.62	92	0.96	24	—	—	—	—	0.68	17	15	U28RT	2
HYAO_29	250 kcmil	1	9.00	229	1.44	37	1.12	28	1.88	48	3.62	92	0.96	24	—	—	—	—	0.75	19	16	U29RT	2
HYAO_31	350 kcmil	1	9.12	232	1.62	41	1.12	28	2.00	51	3.62	92	0.96	24	—	—	—	—	0.88	22	18	U31RT	4
HYAO_34	500 kcmil	1	10.00	254	1.88	48	1.62	41	2.88	73	3.62	92	1.19	30	—	—	—	—	1.05	27	20	U34RT	4
HYAO_39	750 kcmil	1	10.13	257	2.50	64	2.00	51	2.88	73	3.75	95	1.31	33	—	—	—	—	1.32	34	24	U39RT	4
HYA_28	4/0	2	8.62	219	1.44	37	1.12	28	1.75	44	3.62	92	—	—	—	—	—	—	0.68	17	15	U28RT	2
HYA_29	250 kcmil	2	8.75	222	1.44	37	1.12	28	1.88	48	3.62	92	—	—	—	—	—	—	0.75	19	16	U29RT	2
HYA_31	350 kcmil	2	8.87	225	1.62	41	1.12	28	2.00	51	3.62	92	—	—	—	—	—	—	0.88	22	18	U31RT	4
HYA_34	500 kcmil	2	9.75	248	1.88	48	1.62	41	2.88	73	3.62	92	—	—	—	—	—	—	1.05	27	20	U34RT	4
HYA_39	750 kcmil	2	9.88	251	2.50	64	2.00	51	2.88	73	3.75	95	—	—	—	—	—	—	1.32	34	24	U39RT	4
HYM_28	4/0	3	7.87	200	1.44	37	—	—	1.75	44	3.62	92	—	—	2.50	64	0.52	13	0.68	17	15	U28RT	2
HYM_29	250 kcmil	3	8.00	203	1.44	37	—	—	1.88	48	3.62	92	—	—	2.50	64	0.58	14	0.75	19	16	U29RT	2
HYM_31	350 kcmil	3	8.12	206	1.62	41	—	—	2.00	51	3.62	92	—	—	2.50	64	0.68	17	0.88	22	18	U31RT	4
HYM_34	500 kcmil	3	9.38	238	1.88	48	—	—	2.88	73	3.62	92	—	—	2.88	73	0.81	21	1.05	27	20	U34RT	4
HYM_39	750 kcmil	3	9.51	242	2.50	64	—	—	2.88	73	3.75	95	—	—	2.88	73	1.00	25	1.32	34	24	U39RT	4
HYS_28	4/0	4	7.12	180	1.44	37	—	—	1.75	44	3.62	92	—	—	—	—	—	—	0.68	17	15	U28RT	2
HYS_29	250 kcmil	4	7.38	188	1.44	37	—	—	1.88	48	3.62	92	—	—	—	—	—	—	0.75	19	16	U29RT	2
HYS_31	350 kcmil	4	7.62	194	1.62	41	—	—	2.00	51	3.62	92	—	—	—	—	—	—	0.88	22	18	U31RT	4
HYS_34	500 kcmil	4	9.38	238	1.88	48	—	—	2.88	73	3.62	92	—	—	—	—	—	—	1.05	27	20	U34RT	4
HYS_39	750 kcmil	4	9.51	242	2.50	64	—	—	2.88	73	3.75	95	—	—	—	—	—	—	1.32	34	24	U39RT	4

Notes:

1. For insulated version add suffix "-C" to Catalog Number (example: HYMS34C).
2. High Capacity Limiter. 200kA interrupting capacity at 600V AC.
3. Cable end utilize dies with Y35, Y39, Y46, Y45, Y750 tools (750 kcmil size units cannot be installed with the Y35 HYPRESS™).

④ For fast operating limiter use "F"; for slow or standard operating limiter use "S" before conductor number (example: HYMF34 or HYMS34) see Time-Current Characteristics.

Blue highlighted items are industry standard and most frequently ordered.

PRODUCTS FOR UNDERGROUND RESIDENTIAL DISTRIBUTION SYSTEMS

For over 85 years, BURNDY has pioneered and produced economical, dependable connectors and protective devices for urban underground distribution systems. This extensive experience has been applied to the development of equipment for low cost underground distribution systems for light commercial and residential areas.

Increasing interest by home buyers and developers has created a need for URD components comparable in cost with those used in overhead systems.

Using connectors designed for other purposes, early URD installations were relatively expensive. Recognizing the need to reduce installation costs, BURNDY developed a line of connectors specifically for URD.

These products are shown in this section. They are the result of a continuing search for new materials and more efficient production methods to bring down cost to meet the requirements of low cost underground construction.

TYPE RDMD-28G

URD STUD MOLE™

The RDMD-28G Stud MOLE™ is a sub-mersible junction designed to accommodate a range of copper and aluminum conductors. The Stud MOLE™ is designed for use on transformers where a dead front secondary is required. It is insulated with molded EPT rubber. Mates with a 5/8"-11 copper stud. A jam nut is supplied with the MOLE™ to secure and lock it to the stud. It is available with either four or six outlets. All outlets

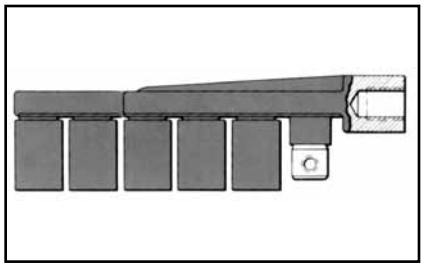

except one have factory installed removable sealing caps. Tap kits are ordered separately. REA listed.

Also available without insulation and sealing caps.

Catalog Number	Number of Outlets	Insulated
RDMD4-28G3	4	Yes

TYPE RDMD-2858D

STUD MOLE™

The RDMD-2858D Stud MOLE™ is identical to the insulated RDMD-28G except an adapter is supplied, allowing MOLE™ to be removed from transformer stud without disconnecting the individual services.

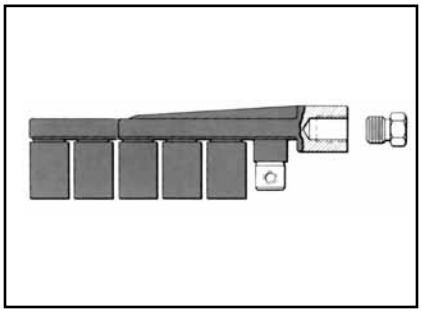

Catalog Number	Number of Outlets	Insulated
RDMD4-2858D	4	Yes

TYPE RDMD-28CR

RUBBER INSULATING BOOT

The EPDM rubber force fit boot is designed to provide a completely dead-front and moisture tight installation when used with either the Type RDMD-28G3 or Type RDMD-2858D Stud MOLE™. Bushing end will seal any diameter from 0.875 to 1.125 inch.

Catalog Number : RDMD-28CR

Blue highlighted items are industry standard and most frequently ordered.

TYPE RDM-28

URD MOLE™

For Aluminum or Copper

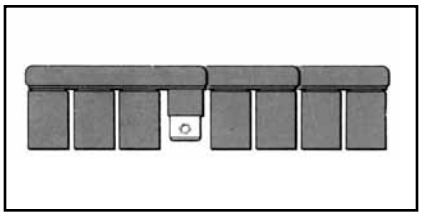

Type RDM-28 MOLE™ is an economical, insulated, submersible service junction suitable for direct burial or for use in enclosures. Disconnectable joints allow additions of new services without disturbing previous installations. Taping is eliminated, heat-shrink or force-fit rubber sleeves insulate each joint. Rubber is used to insulate the MOLE™ body. Removable sealing covers are supplied on all outlets but two. REA listed Tap Kits, including HYLUG™, hardware and sleeve are ordered separately.

Catalog Number	Number of Outlets
RDM4-28	4
RDM6-28	6
RDM8-28	8

TYPE RDM-28T

URD MOLE™

For Aluminum and Copper

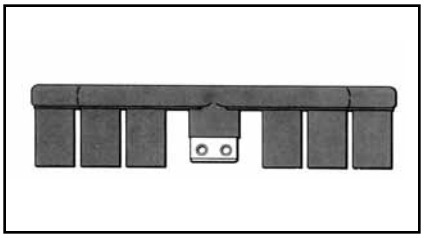

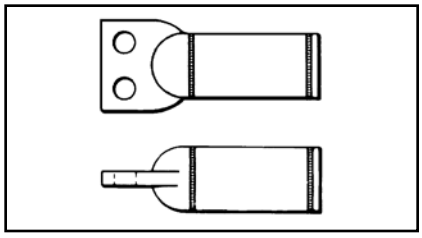

The RDM-28T MOLE™ is available with five or seven outlets. The single hole outlets are the same size as the RDM-28 series and accommodate the same RYA-UC or RYA-UCR tap kits. The larger two-hole outlet accommodates the 500 or 350 kcmil copper cable secondary supplied with many subsurface transformers. These cables are extended to a junction point where secondary mains or services are connected. Tin-plated copper RYA-C-2 tap kits are used to join the 500 or 350 kcmil copper secondaries to the RDM-28T MOLE™.

Catalog Number	Number of Outlets	
	12 Sol. - 350	350 - 500
RDM5-28T	4	1
RDM7-28T	6	1

Catalog Number		Copper Conductor	Die Index	Tools, Die Set, Catalog No. & (No. of Crimps)	
Heat Shrink	Force Fit			Y34A	Y35* Series Y750, 739
RYA31C-2	RYA31CR-2	350	20	A34R (4)	U34RT (4)
RYA34C-2	RYA34CR-2	500			

*Y35 U Dies with adapter PT6515 can also be used in Y45 series HYPRESS™. Same number of crimps as Y35.

TYPES RA6UC-SL, RA6UCR-SL

URD STREET LIGHTING TAP KIT

FOR ALUMINUM OR COPPER

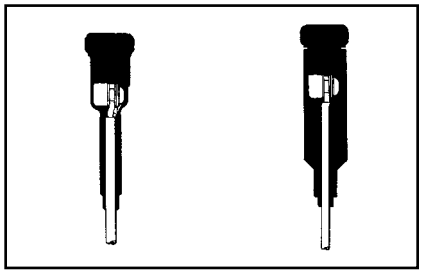

URD tap kit for making street lighting taps from URD MOLE™ types RDM-28 and RDM-28T. Each kit accommodates 6 str. - 12 sol. Kits include connector, mounting hardware and insulating sleeve.

Catalog Number		Conductor
Heat Shrink	Force Fit	
RA6UC-SL	RA6UCR-SL	6 Str. - 12 Sol.

Blue highlighted items are industry standard and most frequently ordered.

TYPES RYA-UC, RYA-AC

MOLE™ TAP KITS

For Aluminum or Copper with Type RDM-28 URD MOLE™

The kit consists of Universal HYLUG™, mounting hardware and heat-shrink sleeve. The HYLUG™ is pre-filled with PENETROX™ joint compound and sealed. Installed with common installation tools, three die sets install a range of 4 str.- 350 kcmil. The heatshrink sleeve is lined with a mastic material, providing a positive seal. Installed with standard propane torch, or 500°F electric heat gun. Acetylene heat is too intense and is not recommended.

TYPES RYA-UCR, RYA-ACR

The kit consists of Universal HYLUG™, mounting hardware and pre-lubricated forcefit rubber sleeve. The HYLUG™ is pre-filled with PENETROX™ joint compound and sealed. Installed with common installation tools, three die sets install a range of 4 str.- 350 MCM. The rubber sleeve has internal sealing rings that provide a positive moisture seal by exerting circumferential force on cable and MOLE™ insulation. Pre-lubricating sleeve makes installation easier. REA listed. No trimming required.

TYPES RYA-UC, RYA-AC

TYPES RYA-UCR, RYA-ACR

Catalog Number			Conductor		EEI Die Index	Die Index	Tools, Die Set Catalog Number & (Number of Crimps)		
Heat Shrink		Force Fit							
Complete Set	Shrink Sleeve Only	Complete Set	Copper	Aluminum			MD6 Series	Y39, Y35, Y750 Series	OUR840
RYA4UC	RYAC25	RYA4UCR	2 Sol.- 4 Str.	2 Sol. - 4 Str. 4 Str. Comp	8A	BG or 5/8-1 or 243	W-BG (1) BG3 or W243	U-BG (1) UK58-IT (3) U243 (1)	XBG (3) XNBG (2)
RYA2UC	RYAC25	RYA2UCR	2 Str. - 1/0 Sol.	2 Str. - 1/0 Sol. 2-1 Str. Comp					
RYA25UC	RYAC25	RYA25UCR	1/0 Str.	1/0 Str. - 2/0 Sol. 1/0 Str. Comp.					
RYA2WAC	RYAC25	RYA2WACR	—	2 Sol. EC-O	—	BG	BG (5)	—	XBG (5) XNBG (3)
RYA75AC	RYAC25	RYA75ACR	—	1/0 Sol. EC-O	—	—	—	UK58-IT (5)	
RYA26UC	RYA31	RYA26UCR	2/0 Str.	2/0 Str. 2/0 Str. Comp.	11	249 or 840	W249 (3) WK840 (5)	U249 (2) UK840T (3)	X249 (6) X840 (5)
RYA27UC	RYA31	RYA27UCR	3/0 Str.	3/0 Str. 3/0 Str. Comp. 4/0 Sol. EC-O	11		W249 (4) WK840 (7)	U249 (2) UK840T (4)	X249 (8) X840 (7)
RYA28UC	RYA31	RYA28UCR	4/0 Str.	4/0 Str. 4/0 Str. - 250 Comp.	11				
RYA29UC	RYA31	RYA29UCR	250 kcmil	250 250 Comp.	13A	299 or 655 or 705	—	U31ART (2) U655 (3) U705 (2)	—
RYA31AC	RYA31	RYA31ACR	—	300 - 350 300 - 350 Comp.	13A		—		—

* Overlap Crimps.
** Do not use EEI Die. (11A) to install 4/0 Sol. EC-O.
NOTE: Standard mounting hardware is 3/8" button head socket cap screw with captive conical washer. For HEX HEAD bolt with captive conical washer add "HEX" suffix.

NOTE: Example: RYA4UCR-HEX. For HEX HEAD bolt and captive flat washer add suffix "HEX1". For HEX HEAD bolt and non-captive flat washer add suffix "HEX2". For HEX HEAD bolt and non-captive conical washer add suffix "HEX3". For Stainless Steel HEX HEAD bolt add "HEX355" suffix.

TYPE BSSBC

OVERHEAD OR UNDERGROUND SECONDARY CONNECTORS

For Aluminum and Copper Conductors

Rubber Insulated and dual rated for aluminum and copper conductors.

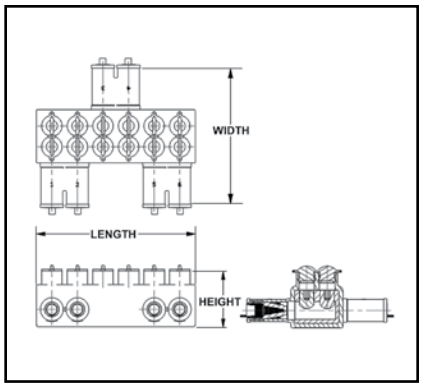

Features and Benefits

- Meets the performance requirements of ANSI C119.1, ANSI C119.4 and Western Underground Committee Guide 2.5
- Fully tested to ANSI C119.4 for Class 'A' connectors
- Includes oxide inhibitor
- Supplied with aluminum set screws
- Fabricated from 6061-T6 aluminum alloy for conductivity and strength
- Each unit is individually wrapped and labeled for ease of identification and cleanliness

Catalog Number	Number of Outlets	Wire Range (Aluminum or Copper)	Width	Height	Length
BSSBC750-2-1	3	2 - 750	8.50	3.07	4.57
BSSBC750-3-1	4	2 - 750	8.50	3.07	6.13
BSSBC750-4-1	5	2 - 750	8.50	3.07	7.69
BSSBC750-4-2	6	2 - 750	8.50	3.07	9.25
BSSBC750-6-2	8	2 - 750	8.50	3.07	10.81

TYPES BSSBC, BDESS

SUBMERSIBLE SECONDARY CONNECTORS

For Aluminum and Copper Conductors

Rubber Insulated and dual rated for aluminum and copper conductors.

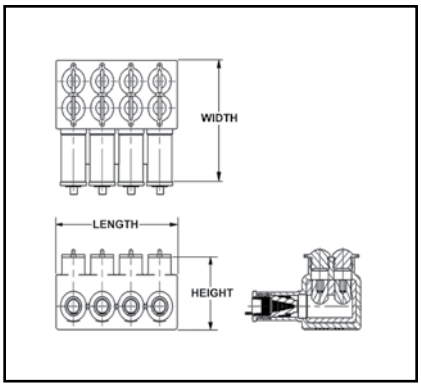

Features and Benefits

- Meets the performance requirements of ANSI C119.1, ANSI C119.4 and Western Underground Committee Guide 2.5
- Fully tested to ANSI C119.4 for Class 'A' connectors
- Includes oxide inhibitor
- Supplied with aluminum set screws
- Fabricated from 6061-T6 aluminum alloy for conductivity and strength
- Each unit is individually wrapped and labeled for ease of identification and cleanliness

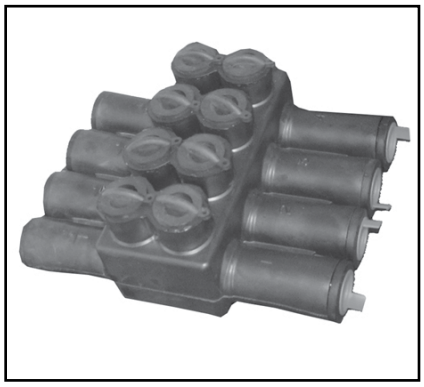

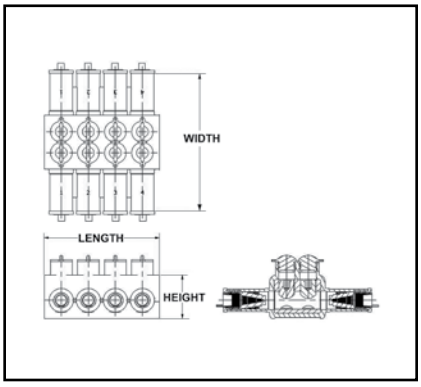

Catalog Number*	Number of Outlets	Wire Range (Aluminum or Copper)	Width	Height	Length
BSSBC750-3	3	2 - 750	5.42	3.07	4.57
BSSBC750-4	4	2 - 750	5.42	3.07	6.13
BSSBC750-5	5	2 - 750	5.42	3.07	7.69
BSSBC750-6	6	2 - 750	5.42	3.07	9.25
BSSBC750-7	7	2 - 750	5.42	3.07	10.81
BSSBC750-8	8	2 - 750	5.42	3.07	12.37
BDESS750-3	6	2 - 750	8.15	3.07	4.57
BDESS750-4	8	2 - 750	8.15	3.07	6.13
BDESS750-5	10	2 - 750	8.15	3.07	7.69
BDESS750-6	12	2 - 750	8.15	3.07	9.25
BDESS750-7	14	2 - 750	8.15	3.07	10.81
BDESS750-8	16	2 - 750	8.15	3.07	12.31

Blue highlighted items are industry standard and most frequently ordered.

TYPE YS-CG

URD INSULATED SPLICE KIT

For All Aluminum or Copper/Aluminum Combinations

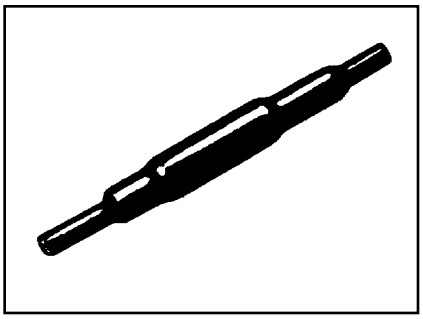

Type YS-CG URD insulated splice kit consists of a standard YSU or YSD LINKIT™ and a heat-shrink sleeve. Used to splice URD secondary lines up to 600 volts. It is installed with common installation tools. Heat-shrink sleeve is installed with standard propane torch, or 500° F electric heat gun. Acetylene is not recommended.

Catalog Number		Conductor			Die Index	Tools, Die Set Catalog Number, & (No. of Crimps)		
Complete Splice Kit	Heat Shrink Sleeve	Both Sides						
		Aluminum	ACSR	Copper *		MD6 Series	Y34A	Y35 Series
YS2UCG1	RYAC25	1-2 Str.	2 (6-1, 7-1)	1-2 Str.	BG 243	BG (3) W-BG (1)** W243 (2)	—	U-BG(1)** U243 (1)
YS25UCG1		1/0 Str. 1/0 Comp.	1/0 (6-1)	1/0 Str.			A243(1)	
YS26UCG1	RYAC31-1	2/0 Str. 2/0 Comp.	2/0 (6-1)	2/0 Str.	249/840	W249 (4) W-K840 (7)	A249 (2) —	U249 (2) U-K840T (4)
YS27UCG1		3/0 Str. 3/0 Comp.	3/0 (6-1)	3/0 Str.				
YS28UCG1		4/0 Str. 4/0 Comp.	4/0 (6-1)	4/0 Str.				
YS31ACG1	RYAC31	350 350 Comp.	—	350	299/705	—	—	U299 (2) U705 (1)

* Use to join copper to aluminum or ACSR not copper to copper.
** Multiple crimp die set makes more than one crimp per compression.

TYPES J1207 & J1592

Y-LOK

For Locking Enclosure

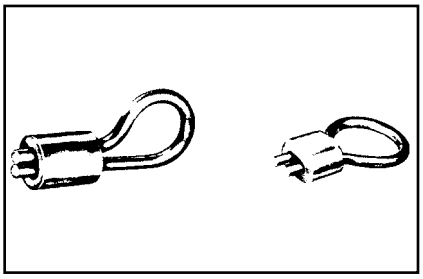

Assembly consists of aluminum-clad steel wire loop and a compression type aluminum connector. Installed with BG groove of MD6 or OUR840 Compression Tools. Can also be installed with 5/8 or 5/8-1 grooves.

J1207 & J1592

Compression Y-LOK installed with BG or 5/8 groove.

Catalog Number	Installation Tooling		L	C	D
	MD6, OUR840	Y35, Y750, Y46			
J1207	WBG XBG	UBG	2.28	0.75	1.00
J1592			2.31	0.75	0.75

Blue highlighted items are industry standard and most frequently ordered.

TYPE YRB-U

HYREDUCER™ SPLICE

For Aluminum to Aluminum and Aluminum to Copper

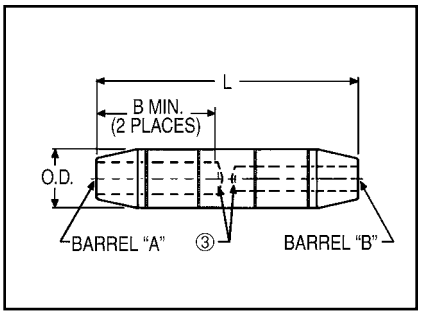

Type YRB-U splice is designed for use within underground systems. Aluminum splices are tin-plated and recommended for use on Aluminum-to-Aluminum and Aluminum-to-Copper cables. All splices have solid center stop for use with oil filled and non-oil filled cables. The Outside Diameter is held constant to minimize installation dies and connectors are prefilled with PENETROX™. Rated up to 35 kV.

Catalog Number	Conductor Range		Dimensions		O.D.	Wire Strip Length		Die Index	Color Code
	Barrel "A" Copper & Aluminum	Barrel "B" Copper & Aluminum	B Min.	L		Barrel "A"	Barrel "B"		
YRB2U3TTN	#2 (.292 Dia.) 7 Str.	#3 (.260 Dia.) 7 Str.	1.35 [34]	3.25 [83]	0.65 [17]	1-3/4"	1-3/4"	296	Tan
YRB1CU2TTN	#1 (.332 Dia.) 19 Str. or 1/0 Compact (.336 Dia.) 19 Str.	#2 (.292 Dia.) 7 Str.							
YRB1CU1TTN	#1 (.332 Dia.) 19 Str. or 1/0 Compact (.336 Dia.) 19 Str.	#1 (.332 Dia.) 19 Str. or 1/0 Compact (.336 Dia.) 19 Str.							
YRB25U3TTN	1/0 (.373 Dia.) 19 Str. or 1/0 Compact (.336 Dia.) 19 Str.	#3 (.260 Dia.) 7 Str.							
YRB25U2TTN	1/0 (.373 Dia.) 19 Str. or 1/0 Compact (.336 Dia.) 19 Str.	#2 (.292 Dia.) 7 Str.							
YRB25U25TTN	1/0 (.373 Dia.) 19 Str. or 1/0 Compact (.336 Dia.) 19 Str.	1/0 (.373 Dia.) 19 Str. or 1/0 Compact (.336 Dia.) 19 Str.							
YRB27U25TW	3/0 (.470 Dia.) 19 Str. or 3/0 Compact (.423 Dia.) 19 Str.	1/0 (.373 Dia.) 19 Str. or 1/0 Compact (.336 Dia.) 19 Str.	1.53 [39]	3.69 [94]	0.85 [22]	1-1/2"	1-1/2"	298	White
YRB28U3TW	4/0 (.528 Dia.) 19 Str. or 4/0 Compact (.475 Dia.) 19 Str.	#3 (.260 Dia.) 7 Str.							
YRB28U1TW	4/0 (.528 Dia.) 19 Str. or 4/0 Compact (.475 Dia.) 19 Str.	#1 (.332 Dia.) 19 Str. or 1/0 Compact (.336 Dia.) 19 Str.							
YRB28U25TW	4/0 (.528 Dia.) 19 Str. or 4/0 Compact (.475 Dia.) 19 Str.	1/0 (.373 Dia.) 19 Str. or 1/0 Compact (.336 Dia.) 19 Str.	1.53 [39]	3.70 [94]					
YRB28U26TW	4/0 (.528 Dia.) 19 Str. or 4/0 Compact (.475 Dia.) 19 Str.	2/0 (.419 Dia.) 19 Str. or 2/0 Compact (.376 Dia.) 19 Str.	1.53 [39]	3.69 [94]					
YRB28U28TW	4/0 (.528 Dia.) 19 Str. or 4/0 Compact (.475 Dia.) 19 Str.	4/0 (.528 Dia.) 19 Str. or 4/0 Compact (.475 Dia.) 19 Str.							
YRB31U25TW	350 kcmil (.681 Dia.) 37 Str. or 350 kcmil Compact (.616 Dia.) 19 Str. Al; 37 Str. Al & Cu	1/0 (.373 Dia.) 19 Str. or 1/0 Compact (.336 Dia.) 19 Str.	2.34 [59]	5.43 [138]	1.11 [28]	2-1/4"	2-1/4"	299	Brown
YRB31U28TW	350 kcmil (.681 Dia.) 37 Str. or 350 kcmil Compact (.616 Dia.) 19 Str. Al; 37 Str. Al & Cu	4/0 (.528 Dia.) 19 Str. or 250 kcmil Compact (.520 Dia.) 37 Str.							
YRB31U31TW	350 kcmil (.681 Dia.) 37 Str. or 350 kcmil Compact (.616 Dia.) 19 Str. Al; 37 Str. Al & Cu	350 kcmil (.681 Dia.) 37 Str. or 350 kcmil Compact (.616 Dia.) 19 Str. Al; 37 Str. Al & Cu							

1 Material: Aluminum.
2 Finish: Electro-tin plated.
③ Barrels are partially filled with PENETROX™ and sealed.
4 Scratch brushing of all conductors before making installation is recommended.
5 Not for use with Copper-to-Copper applications.
6 Dimensions in brackets [ ] are in millimeters rounded off to the nearest millimeter, unless otherwise noted and are for reference only.
⑦ Catalog number PT6515 Adaptor is required to use "U" dies in Y45 series tools.
⑧ Catalog number PUADP-1 Adaptor is required to use "U" dies in Y46 series tools.
9 On MY29-3 HYTOOL™ use alum. Index plate settings as follows, for 1/0 conductor use 1/0 setting. For conductor smaller than 1/0 size use 2/0 setting.

Blue highlighted items are industry standard and most frequently ordered.

TYPE YRB-U

HYREDUCER™ SPLICE
(Continued)

For Aluminum to Aluminum and Aluminum to Copper

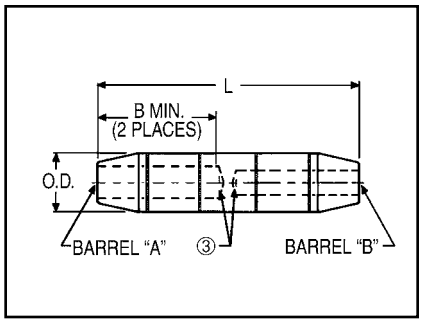

Catalog Number	Conductor Range		Dimensions		O.D.	Wire Strip Length		Die Number	Color Code
	Barrel "A" Copper & Aluminum	Barrel "B" Copper & Aluminum	B Min.	L		Barrel "A"	Barrel "B"		
YRB34U25TW	500 kcmil (.813 Dia.) 37 Str. or 500 kcmil Compact (.736 Dia.) 19 Str. Al; 37 Str. Al & Cu	1/0 (.373 Dia.) 19 Str.	2.70 [69]	6.00 [152]	1.31 [33]	1-1/8"	1-1/8"	300	Pink
YRB34U28TW	500 kcmil (.813 Dia.) 37 Str. or 500 kcmil Compact (.736 Dia.) 19 Str. Al; 37 Str. Al & Cu	4/0 (.528 Dia.) 19 Str. or 4/0 Compact (.475 Dia.) 19 Str.							
YRB34U29TW	500 kcmil (.813 Dia.) 37 Str. or 500 kcmil Compact (.736 Dia.) 19 Str. Al; 37 Str. Al & Cu	250 kcmil (.575 Dia.) 37 Str.							
YRB34U30TW	500 kcmil (.813 Dia.) 37 Str. or 500 kcmil Compact (.736 Dia.) 19 Str. Al; 37 Str. Al & Cu	300 kcmil (.630 Dia) 37 Str.							
YRB34U31TW	500 kcmil (.813 Dia.) 37 Str. or 500 kcmil Compact (.736 Dia.) 19 Str. Al; 37 Str. Al & Cu	350 kcmil (.681 Dia.) 37 Str. or 350 kcmil Compact (.616 Dia.) 19 Str. Al; 37 Str. Al & Cu							
YRB34U34TW	500 kcmil (.813 Dia.) 37 Str. or 500 kcmil Compact (.736 Dia.) 19 Str. Al; 37 Str. Al & Cu	500 kcmil (.813 Dia.) 37 Str. or 500 kcmil Compact (.736 Dia.) 19 Str. Al; 37 Str. Al & Cu							
YRB39U31TW	750 kcmil (.998 Dia.) 61 Str. or 750 kcmil Compact (.908 Dia.) 61 Str.	350 kcmil (.681 Dia.) 37 Str. or 350 kcmil Compact (.616 Dia.) 19 Str. Al; 37 Str. Al & Cu	2.87 [73]	6.74 [171]	1.46 [37]	3"	3-11/16"	936	Yellow
YRB39U34TW	750 kcmil (.998 Dia.) 61 Str. or 750 kcmil Compact (.908 Dia.) 61 Str.	500 kcmil (.813 Dia.) 37 Str. or 500 kcmil Compact (.736 Dia.) 19 Str. Al; 37 Str. Al & Cu							
YRB39U39TW	750 kcmil (.998 Dia.) 61 Str. or 750 kcmil Compact (.908 Dia.) 61 Str.	750 kcmil (.998 Dia.) 61 Str. or 750 kcmil Compact (.908 Dia.) 61 Str.							
YRB44U31TW	1000 kcmil (1.152 Dia.) 61 Str.	350 kcmil (.681 Dia.) 37 Str. or 350 kcmil Compact (.616 Dia.) 19 Str. Al; 37 Str. Al & Cu							
YRB44U34TW	1000 kcmil (1.152 Dia.) 61 Str.	500 kcmil (.813 Dia.) 37 Str. or 500 kcmil Compact (.736 Dia.) 19 Str. Al; 37 Str. Al & Cu							
YRB44U39TW	1000 kcmil (1.152 Dia.) 61 Str.	750 kcmil (.998 Dia.) 61 Str. or 750 kcmil Compact (.908 Dia.) 61 Str.							
YRB44U44TW	1000 kcmil (1.152 Dia.) 61 Str.	1000 kcmil (1.152 Dia.) 61 Str.							

1 Material: Aluminum.
2 Finish: Electro-tin plated.
③ Barrels are partially filled with PENETROX™ and sealed.
4 Scratch brushing of all conductors before making installation is recommended.
5 Not for use with Copper-to-Copper applications.
6 Dimensions in brackets [ ] are in millimeters rounded off to the nearest millimeter, unless otherwise noted and are for reference only.
⑦ Catalog number PT6515 Adaptor is required to use "U" dies in Y45 series tools.
⑧ Catalog number PUADP-1 Adaptor is required to use "U" dies in Y46 series tools.
9 On MY29-3 HYTOOL™ use alum. Index plate settings as follows, for 1/0 conductor use 1/0 setting. For conductor smaller than 1/0 size use 2/0 setting.

Blue highlighted items are industry standard and most frequently ordered.

TYPE YRB-U

HYREDUCER™ SPLICE
(Continued)

For Aluminum to Aluminum and Aluminum to Copper

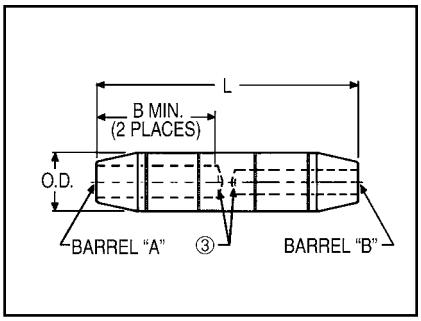

Installation (Number of Crimps per End)							
Color Code	Die Index	Hydraulic					Dieless (# of Crimps)
		Y35, Y39, Y750, BAT35, BAT750, PAT750	Y46	Y45	Y48B	Y60BHU	Mechanical: MY29-3 (1), MY29011 (1) Hydraulic: Y644M (1), PAT644-18V (1)
Tan	296	U25ART (1)	U25ART (1)	U25ART (1)	C25AR (1)	—	MY29-3 (1) MY29-11 (1) Y644M (1) PAT644-18V (1)
White	298	U28ART (2)	U28ART (2)	U28ART (2)	C28AR (2)	—	
Brown	299	U31ART Overlap Crimp	U31ART Overlap Crimp	U31ART Overlap Crimp	C31AR (1)	L31ART (1)	Y644M (1) PAT644-18V (1)
Pink	300	U34ART Overlap Clamp	U34ART Overlap Clamp	U34ART Overlap Clamp	C34AR (1)	L34ART	
Yellow	936	U39ART-2 (4)	U39ART-2 (4)	U39ART-2 (4)	C39AR (2)	L39ART (2)	—

1 Material: Aluminum.
2 Finish: Electro-tin plated.
③ Barrels are partially filled with PENETROX™ and sealed.
4 Scratch brushing of all conductors before making installation is recommended.
5 Not for use with Copper-to-Copper applications.
6 Dimensions in brackets [ ] are in millimeters rounded off to the nearest millimeter, unless otherwise noted and are for reference only.
⑦ Catalog number PT6515 Adaptor is required to use "U" dies in Y45 series tools.
⑧ Catalog number PUADP-1 Adaptor is required to use "U" dies in Y46 series tools.
9 On MY29-3 HYTOOL™ use alum. Index plate settings as follows, for 1/0 conductor use 1/0 setting. For conductor smaller than 1/0 size use 2/0 setting.

TYPE YRB-T

HYREDUCER™ SPLICE

For Copper to Copper

Type YRB-T splice is designed for use within underground systems. Copper splices are tapered and recommended for use on copper-to-copper cables.

All splices have solid center stops for use with oil filled and non-oil filled cables.

The Outside Diameter is held constant to minimize installation dies. Rated up to 35 kV

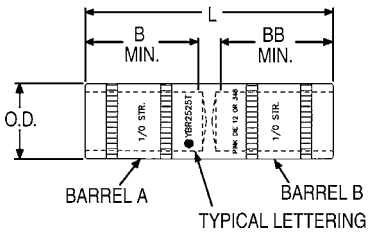

Fig. 1

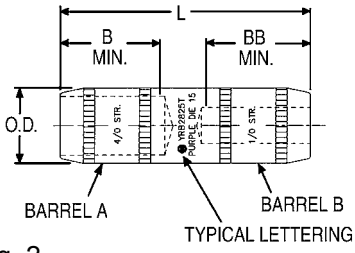

Fig. 2

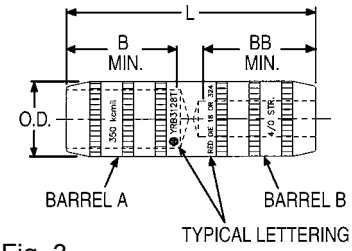

Fig. 3

Catalog Number ② ⑦	Figure No.	Conductor Size		Dimensions			
		Barrel "A"	Barrel "B"	B Min.	BB Min.	L	O.D.
YRB2825T	2	4/0 (0.53)	1/0 (0.37)	1.16 [29]	1.16 [29]	2.84 [73]	0.69 [18]
YRB3428T	3	500 kcmil	4/0 (0.53)	1.73 [44]	1.73 [44]	4.50 [114]	1.06 [27]

② ⑦ Catalog Number	Color Code	Installation Tooling (Number of Crimps)											Dieless (# of Crimps)	Wire Strip Length
		Die Information		Mechanical			Hydraulic							
		Die Index	Type	OUR840	MD7 MD7-34R	MD6	Y35, Y39, Y750, PAT750	BCT500, Y500CT	④ Y46	③ Y45	Y48B	Y60BHU		
YRB2825T	Purple	Die 15	Purple Die Set	X28VT (4) X28RT (4)	X28VT (4)	X28VT (4)	U28RT (1)	—	U28RT (1)	—	C28R (1)	L29ART (1)	Hydraulic: Y644M (1) PAT644M (1)	1-7/32"
YRB3428T	Brown	Die 20 or 299	Brown Die Set	—	—	—	U34ART (2) U31ART (2)	W34VT (2) W34RT (2)	U34RT (2) U31ART (2)	U34RT (2) U31ART (2)	C34R (1) C31AR (1)	L34RT (1)	Hydraulic: Y644M (1) PAT644M (1)	1-13/16"

1 Material: Copper.
② For Tin-Plating, add suffix "TN" to the Catalog Number (example: YRB2825TN). For Hot Tin dipped add suffix "W" to the catalog number (example: YRB2825TW).
③ Catalog Number PT6515 Adaptor is required to use "U" dies in Y45 series tools.
④ Catalog Number PUADP-1 is required to use "U" dies in Y46 series tools.
5 Dimensions in brackets [ ] are in millimeters rounded off to the nearest millimeter, unless otherwise specified, and are for reference only.
⑦ Suffix "TN" and "W" will not be stamped on part.

Blue highlighted items are industry standard and most frequently ordered.

TYPES BSSI, BTWTC

SUBMERSIBLE SPLICE COVERS

Soft Rubber Covers for Insulating

BSSI style

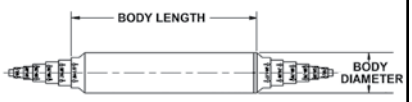

Features and Benefits

- 600 Volt compression splice connections including those subject to water submersion: Suitable for direct burial. Ends have stepped sealing surfaces to accommodate a wide variety of conductor sizes
- Maintains watertight integrity and full insulating value in all direct buried, underground networks, residential and overhead service joints
- Taping is eliminated and splice preparation is significantly reduced
- Meets the performance requirements of ANSI C119.1, ANSI C119.4 and Western Underground Committee Guide 2.5

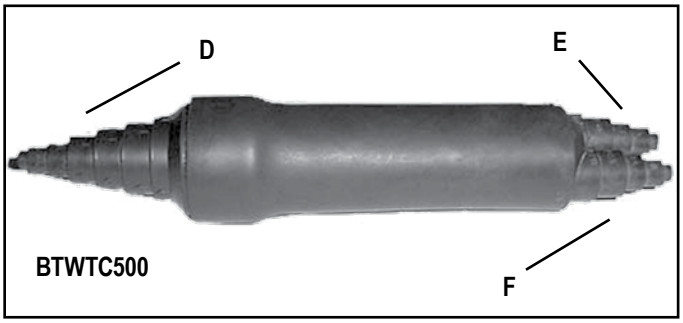

BTWTC500

NOTE: Covers are supplied without connectors.

Catalog Number	Copper Conductor	Aluminum Conductor	Cable Insulation	Body Length	Body Diameter	Uncompressed Splice Size	
						O.D.	O.A.L.
BSSI-20	14 - 2/0	14 - 2/0	0.15 - 0.60	4.40	0.84	0.75	3.00
BSSI-500	14 - 500	14 - 500	0.15 - 1.18	5.30	1.25	1.19	4.00
BSSI-500L	14 - 500	14 - 500	0.15 - 1.18	7.70	1.35	1.19	6.00

Catalog Number	Cable Range			Body Length
	D	E	F	
BTWTC500	14 - 500	14 - 250	14 - 250	5.30

TYPE K-P-C

URD

URD Service Tap for
Copper Conductors

These compact, wide-range-taking, multiple outlet connectors are made of high conductivity copper alloy. Spherical point Allen set screws provide even clamping forces on conductors up to 4/0 Str. Each connector is supplied with an insulating cover. The mechanical clamping elements allow individual cables to be disconnected without disturbing adjacent connections.

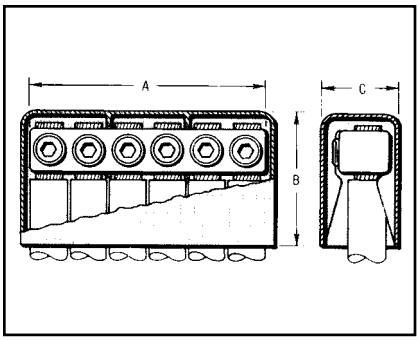

Catalog Number			Conductor	Number of Outlets	A	B	C
Complete Assembly	Connector Only	Cover Only					
K6P28C	**K6P28**	**K-PC28**	6 Str - 4/0 Str.	6	5-1/8	2-3/4	1-5/8

COMPRESSION SERVICE TAPS AND TRANSFORMER TERMINALS

Where compression-type service taps are required, the wide-range-taking, figure "6" shaped, tap connectors are recommended. They can be gripped in a HYPRESS™ and slipped over the secondary main for easy installation. For above-grade installation, commercially available insulating tubes are often used to cover a series of these taps on each main cable stub. Separation of run and tap cables simplifies taping.

TYPE YPC-C

TIN-PLATED COPPER CRIMPIT™

For Copper Conductors

Made of tin-plated pure copper this connector is recommended for copper service taps in above-grade enclosures or for direct burial. The streamlined design facilitates taping. The plating eliminates reaction with insulators.

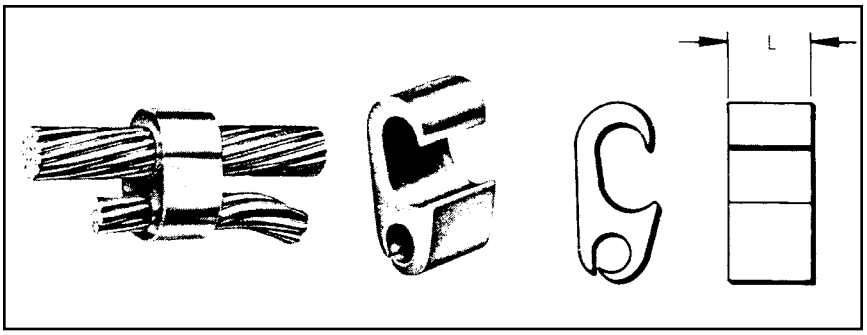

Catalog Number	Conductor		L	Die Index	Installation Tooling	
					Y35, Y750, Y46* HYPRESS™	
	Run	Tap			Die Cat. No.	(No. of Crimps)
YPC29C26	2/0 Str.-250	4 Str.-2/0 Str.	1.00	D3	U-D3	(1)

* Y46 requires PUADP-1 adapter to use U-dies.

TYPES K6B AND K33B

URD TRANSFORMER TERMINALS

For Copper Conductors

These terminals are companion connectors of the various types and possess the same advantages of wide conductor range and compactness. These features simplify cable terminations in the secondary compartments of pad-mounted transformers. The design also permits individual cables to be disconnected without disturbing adjacent joints.

Made of a high conductivity copper alloy, these compact range-taking connectors provide for connecting up to six copper cables at the transformer terminals. The outlets are equipped with spherical point, tinplated brass socket set-screws to provide even clamping forces on the conductors throughout the cable range.

Where cable sizes exceed 4/0 Str., a pressure bar is added to assure optimum performance.

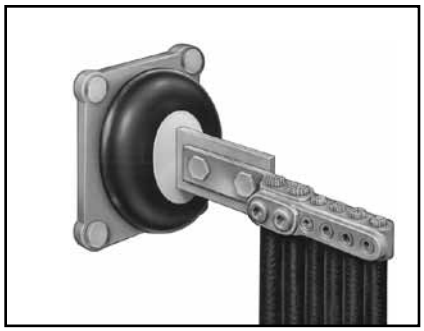

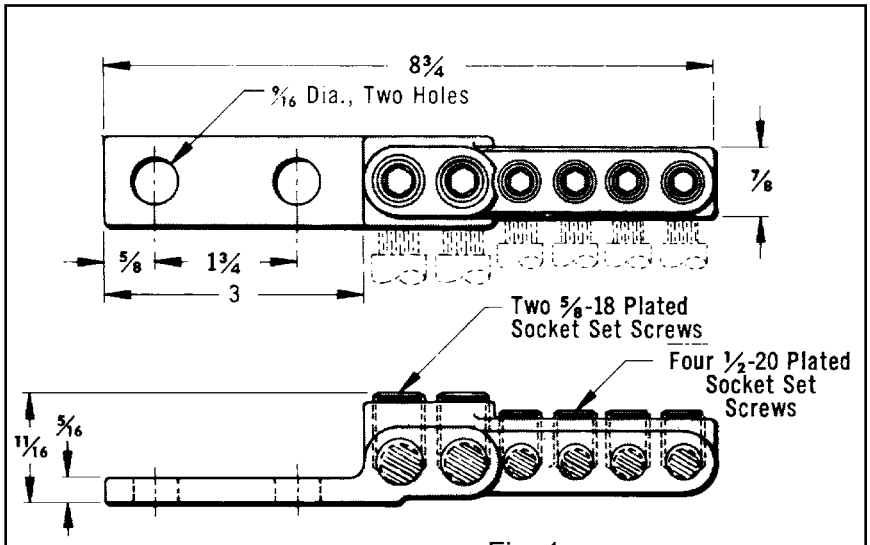

Fig. 1

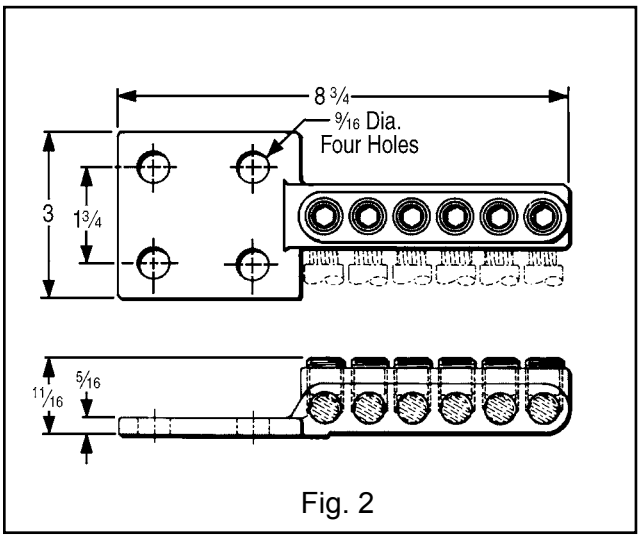

Fig. 2

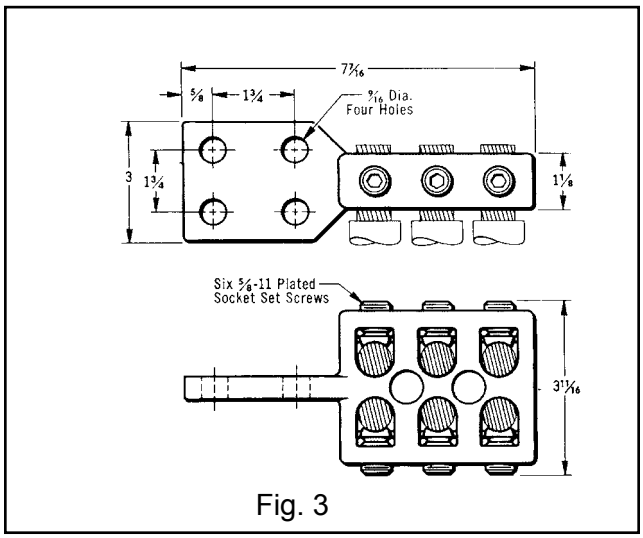

Fig. 3

Catalog Number	Conductor	Fig. No.	NEMA Tongue
K6B2826-2N	Two Outlets: #6 - 4/0 Four Outlets: 6 Str. -2/0	1	2-Hole
K6B28-4N	Six Outlets: 6 Str. - 4/0 Str.	2	4-Hole
K33B34-4N	Six Outlets: 4/0 Str. - 500	3	4-Hole

Blue highlighted items are industry standard and most frequently ordered.

TYPE F-A

URD FUSED TRANSFORMER TERMINALS

These Transformer Tap assembles bolt directly to the secondary terminal pad. They provide for up to eight cables to be fused directly at the secondary terminals. This may be all service taps or combinations of secondary mains and service taps.

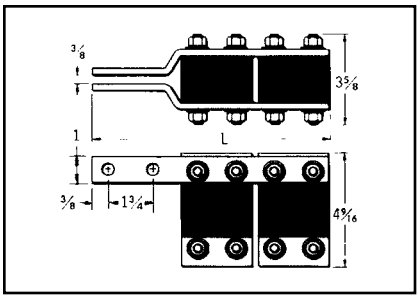

Catalog Number	Number of Fuses	L Inches
F22A28	4	6-1/2

Type LF Limiter and HYLUG™ (copper or aluminum). Compression terminals must be ordered separately.

TYPE K6A34U

TRANSFORMER TERMINALS

For Aluminum and Copper Conductors

Made of aluminum alloy, the massive design minimizes conductor corrosion due to galvanic action. Each outlet is pre-filled with PENETROX™ joint compound and sealed. Plated aluminum socket head pressure screws and aluminum pressure bars prevent conductor damage. Six hole pad allows for adjustable positioning on four hole NEMA spades.

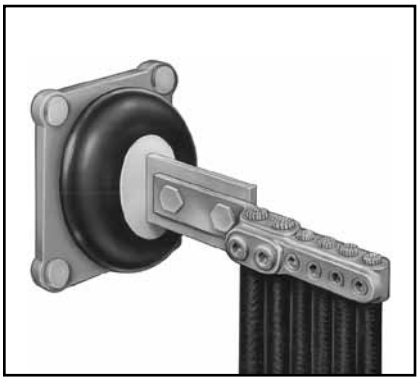

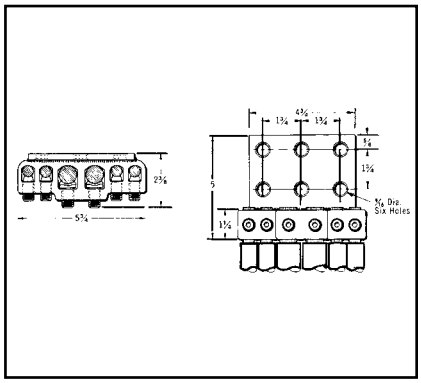

Catalog Number	Conductor	Number of Outlets
K6A34U-6N	Two Outlets 2 Str.-500 Four Outlets 6 Str.-4/0 Str.	6

TYPE K-P-UC

UNIVERSAL URD SERVICE TAP

For Aluminum or Copper

Made of aluminum alloy, the massive design minimizes conductor corrosion due to galvanic action. Each outlet is pre-filled with PENETROX™ joint compound and sealed. Plated aluminum socket head pressure screws and aluminum pressure bars prevent conductor damage. Each connector is supplied with an insulating cover.

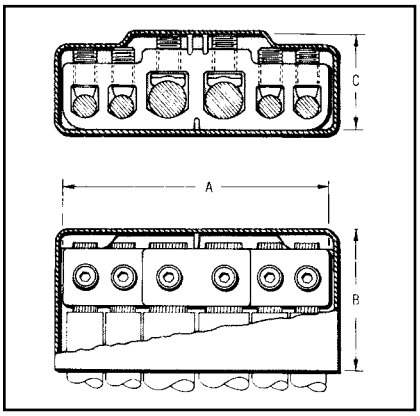

Catalog Number			Conductor	Number of Outlets	A	B	C
Complete Assembly	Connector Only	Cover Only					
K6P34UC	K6P34U	K6PC34U	Two Outlets 2 Str. - 500 Four Outlets 6 Str.- 4/0 Str.	6	5-3/4	3-1/8	2-1/8

Blue highlighted items are industry standard and most frequently ordered.

TYPES BPD & BPD2

POWER DISTRIBUTION BLOCKS

Dual rated ground pedestal lugs. Rated for 600 volt. Constructed from high strength aluminum alloy 6061-T6. Connectors are all plated to provide low contact resistance.

Plastisol covers dielectric strength rating of 120 volts per mil. Nominal thickness is 156 mils. Covers purchased separately.

BPD

BIC

BPD2

BIC2

Catalog Number	Wire Range Aluminum or Copper	Number of Conductors	Dimensions			Insulating Cover
			A	B	C	
BPD-4-350	#6-350	4	3.88	1.38	1.00	**BIC-4-350**
BPD-6-350	#6-350	6	5.69	1.38	1.00	**BIC-6-350**
BPD-8-350	#6-350	8	7.50	1.38	1.00	**BIC-8-350**
BPD-4-500	#2-500	4	4.75	1.63	1.00	**BIC-4-500**
BPD-6-500	#2-500	6	7.00	1.63	1.00	**BIC-6-500**
BPD-8-500	#2-500	8	9.25	1.63	1.00	**BIC-8-500**
BPD2-4-750	#2-750	4	6.56	2.00	2.50	**BIC2-4-750**
BPD2-6-750	#2-750	6	9.88	2.00	2.50	**BIC2-6-750**
BPD2-8-750	#2-750	8	13.81	2.00	2.50	**BIC2-8-750**

TABLE OF CONTENTS

COPPER SUBSTATION L-3
Introduction

Type **NAS** L-4
Cable to Pad

Type **NA** L-5
Tube to Flat

Type **NAH** L-6
Cable to Pad

Type **N2AH** L-7
Cable to Flat

Type **VA** L-8
Cable to Flat

Type **VVA** L-9
Cable to Flat

Type **XA** L-10
Tube to Flat, Expandable

Type **NT** L-11
Tube to Tube

Type **NSNT** L-12
Tube or Cable to Cable

Type **NHNT** L-13
Tube to Cable

Type **VT** L-14
Cable to Cable

Type **NS** L-15
Tube to Tube

Type **XP** L-16
Tube to Tube

Type **UH** L-17
Tube

Type **UHR** L-17
Tube or Cable

Type **LH, LHR** L-18
Tube or Cable

Type **FD** L-19
Stud to Flat Bar

Type **NDR** L-20
Cable, Tube, Flat Bar

Type **QGFL** L-21
Cable to Flat

Type **FCB** L-22
Transformer Tap Adapter

Type **E-C-G** L-22
Transformer Tap Adapter

Type **HFBW** L-23
Bar Clamp

Type **HFB-P1** L-24
Bar Clamp Components

Type **HFB-N** L-24
Tap Pad Adapter

Type **NNT** L-25
Tube to Tube

Type **NNTR** L-26
Cable to Cable

Type **NNTR** L-27
Tube to Cable

L-1

Blue highlighted items are industry standard and most frequently ordered.

Type **NS-A** — **L-28**
Tube to Tube

Type **NA-A** — **L-28**
Tube to Flat

Type **XA-A** — **L-29**
Tube to Flat

Type **NAR** — **L-30**
Cable to Flat

Type **NBC-A** — **L-31**
Tube to Flat

Type **UHG** — **L-32**
Fixed or Rigid Pipe to Base

Type **UHKR-A** — **L-33**
Tube or Cable

Type **LB-A** — **L-34**
Pipe End Cap

Type **WAS-A** — **L-35**
Tube to Pad

Type **WASC-A-N** — **L-36**
Tube to Pad

Type **WG** — **L-37**
Stud to Tube

Blue highlighted items are industry standard and most frequently ordered.

COPPER SUBSTATION CONNECTORS

INTRODUCTION

BURNDY® electrical connectors are designed to be installed with a minimum of effort, to run cooler than the conductors being joined and to provide optimum performance under all operating conditions.

To achieve this type of performance, extensive research and development time is spent by BURNDY® engineers and scientists to improve manufacturing techniques, materials and designs. As these improvements become available, they are incorporated into both existing and new product lines. This continuous program of product innovation and improvement insures that, as new and more critical applications evolve, high quality connectors from BURNDY® will be available to meet the need.

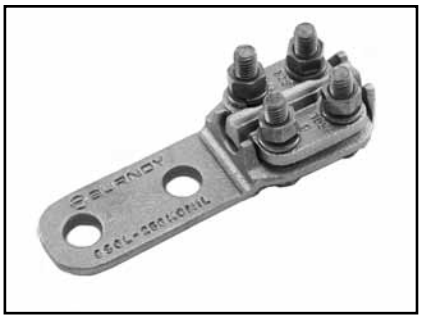

N-Line connectors are two-piece copper alloy castings assembled with DURIUM™ (silicon bronze) hex bolts, nuts and washers. They are available for connecting tube or cable.

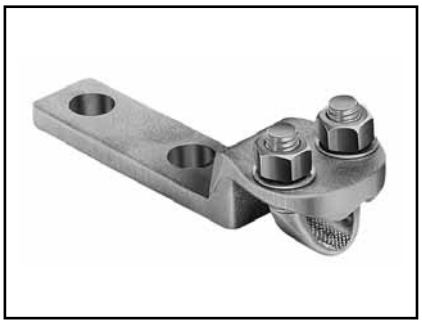

The Variline incorporates a modified V-bolt as the clamping element for heavy-duty applications. This line is particularly suited for use with flexible and extra flexible cables.

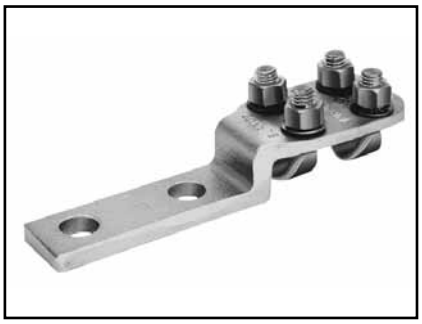

Flat pad connectors used to join cable or tubing terminals to equipment studs.

A variety of bus supports are also available for tube or cable. Some can be adjusted for either a rigid or slide-fit by rotating the clamping cap 180°.

Expansion connectors are used to absorb the stress imposed on the bus by settling ground, thermal expansion and shocks, as in circuit breaker operations. The flexible elements are flat-tinned, copper braid, with sufficient cross sectional area to carry the rated current of the conductors being joined.

TYPE NAS

BOLTED TERMINALS

For Use On Cable To Pad

High copper alloy reversible cap terminal for joining a wide range of cable to pads. Tongue is side formed to provide adequate clearance and terminal is designed for one- wrench installation.

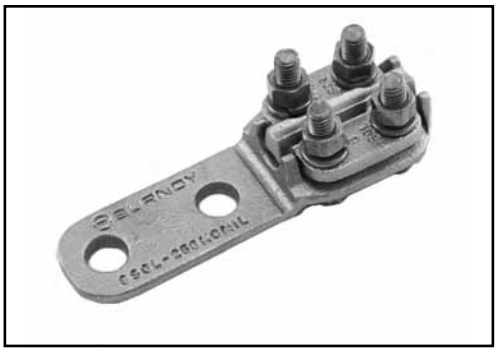

Material: Copper Alloy
Hardware: DURIUM™ Silicon Bronze

Notes :

- Plated versions: add the required suffix to the catalog number. -TN for regular tin plating.
- Please contact factory for other sizes, combinations and availability.
- See NAH family for heavy duty versions.

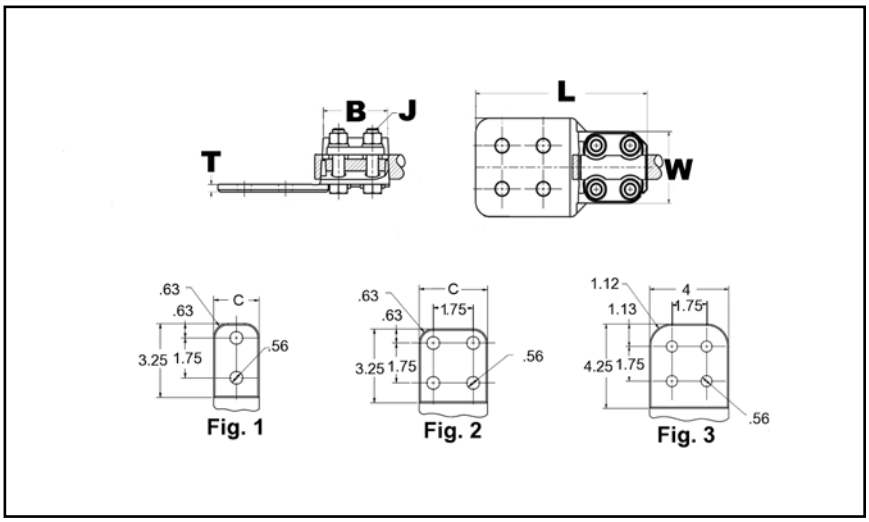

Catalog Number	Fig. #	Copper Stranded Range	Copper Solid Range	B	J Dia.	L	C	T	W
NAS29-2N	1	6 AWG-250 kcmil	6 AWG-4/0 AWG	2.38	3/8	5.62	1.50	0.25	2.00
NAS29-34N	2			2.38	3/8	5.62	3.00	0.25	2.00
NAS29-N	—			2.38	3/8	3.88	1.25	0.25	2.00
NAS34-2N	1	1/0 AWG-500 kcmil	1/0 AWG-4/0 AWG	2.38	3/8	5.62	2.00	0.31	2.20
NAS34-34N	2			2.38	3/8	5.62	3.00	0.25	2.20
NAS34-N	—			2.38	3/8	4.12	1.50	0.25	2.20
NAS40-2N	1	2/0 AWG-800 kcmil	2/0 AWG-4/0 AWG	2.62	3/8	5.88	2.00	0.38	2.44
NAS40-34N	2			2.62	3/8	5.88	3.00	0.31	2.44
NAS40-44N	3			2.62	3/8	6.88	4.00	0.31	2.44

Blue highlighted items are industry standard and most frequently ordered.

TYPE NA

TERMINAL

For Copper Tube to Flat

High copper alloy terminal for joining copper tube to a flat pad. Letter "N" on end of catalog number indicates pad drilled to NEMA standards. One-wrench installation.

Material: Copper Alloy
Hardware: DURIUM™ Silicon Bronze

Notes :

- Plated versions: add the required suffix to the catalog number. -TN for regular tin plating.
- Please contact factory for other sizes, combinations and availability.

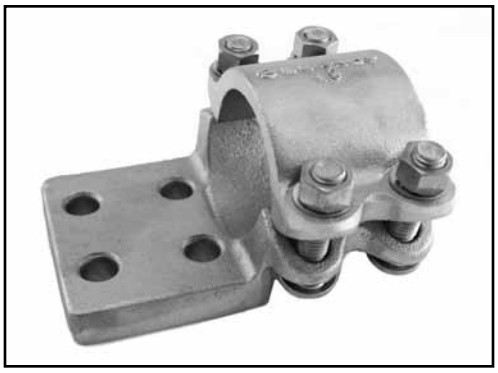

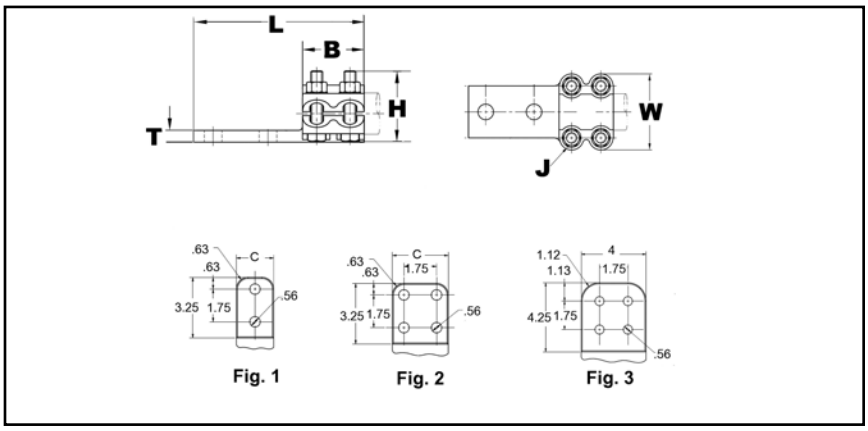

Catalog Number	Fig. #	Copper Pipe (Std or EH)	B	J Dia.	L	H	C	T	W
NA122N	1	3/8 IPS	1.38	3/8	3.75	1.50	1.50	0.25	2.13
NA132N	1	1/2 IPS	2.00		5.25	1.75	1.50	0.38	2.25
NA142N	1	3/4 IPS			5.25	2.00	1.63	0.38	2.44
NA144N	2				4.50	2.00	3.13	0.38	2.44
NA152N	1	1 IPS			5.25	2.06	1.88	0.38	2.75
NA154N	2				5.25	2.06	3.00	0.38	2.75
NA162N	1	1 1/4 IPS	2.69	1/2	5.94	2.56	2.25	0.44	3.50
NA164N	2				5.94	2.56	3.00	0.44	3.50
NA172N	1				5.94	2.75	2.50	0.50	3.94
NA1744NHQ	3	1 1/2 IPS			7.07	3.09	4.00	0.50	3.82
NA174N	2	1 1/4 IPS			5.94	2.75	3.00	0.50	3.94
NA182N	1	2 IPS			5.94	3.12	2.75	0.50	4.62
NA184N	2				5.94	3.13	3.13	0.50	4.63
NA1944N	3	2 1/2 IPS			7.19	3.74	4.00	0.69	5.24
NA1944NHQ	3				7.09	3.96	4.00	0.75	5.12
NA194N	2				5.94	3.69	3.75	0.69	5.25
NA194N90CG2	2	2 1/2 IPS			6.50	3.62	3.75	0.69	5.25
NA204N	2	3 IPS	3.25	5/8	6.56	4.38	4.38	0.69	6.19
NA214N	2	3 1/2 IPS			6.56	4.94	4.75	0.81	6.81
NA224N	2	4 IPS			6.56	5.50	5.25	0.81	7.44

Blue highlighted items are industry standard and most frequently ordered.

TYPE NAH

BOLTED TERMINALS

For Use On Cable To Pad

High copper alloy terminal for joining a wide range of cable to equipment pads. Tongue is side formed to provide adequate clearance and terminal is designed for one-wrench installation.

Material: Copper Alloy
Hardware: DURIUM™ Silicon Bronze

Notes :

- Plated versions: add the required suffix to the catalog number. -TN for regular tin plating.
- Please contact factory for other sizes, combinations and availability

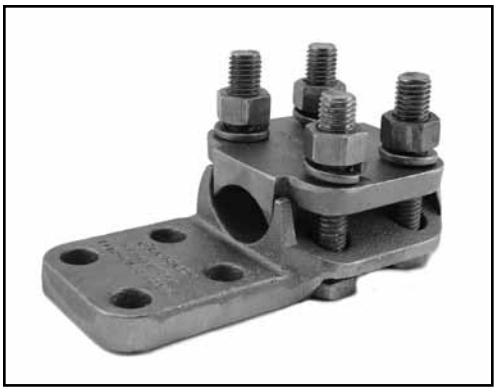

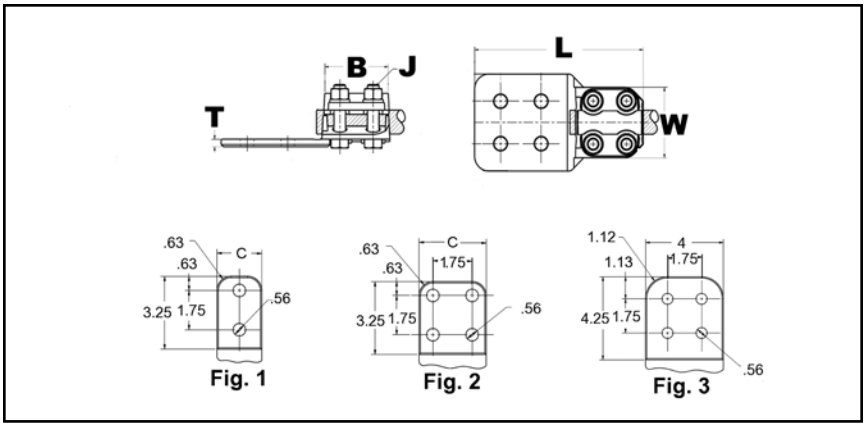

Catalog Number	Fig. #	Copper Stranded Range	Copper Solid Range	B	J Dia.	L	C	T	W
NAH29-2N	1	6 AWG-250 kcmil	6 AWG-4/0 AWG	2.62	1/2	5.88	1.50	0.25	2.44
NAH29-34N	2						3.00		
NAH34-2N	1	1/0 -500 kcmil	1/0 AWG-4/0 AWG				2.00	0.31	2.56
NAH34-34N	2						3.00	0.25	
NAH40-2N	1	2/0 AWG-800 kcmil	3/0 AWG-4/0 AWG				2.00	0.38	2.81
NAH40-34N	2						3.00	0.31	
NAH404-4N	3					6.88	4.00		
NAH44-2N	1	4/0 AWG-1000 kcmil	N/A	2.88		6.12	2.00	0.44	2.88
NAH44-34N	2						3.00	0.38	
NAH44-44N	3					7.12	4.00	0.31	
NAH46-2N	1	1000 kcmil-1500 kcmil		3.06		6.31	2.00	0.50	3.19
NAH46-34N	2						3.00	0.41	
NAH46-44N	3					7.31	4.00	0.38	
NAH48-2N	1	500 kcmil-2000 kcmil		3.25		6.50	2.00	0.69	3.38
NAH48-34N	2						3.00	0.50	
NAH48-44N	3					7.50	4.00	0.44	
NAH48-62N	1	2000 kcmil-2500 kcmil		3.75	5/8	7.12	3.00	0.63	3.96
NAH486-34N	2								

Blue highlighted items are industry standard and most frequently ordered.

TYPE N2AH

BOLTED TERMINALS

For Two Copper Cables to Flat

High copper alloy reversible cap terminal for joining a wide range of cable to pads. Tongue is side formed to provide adequate clearance and terminal is designed for one wrench installation.

Material: Copper Alloy
Hardware: DURIUM™ Silicon Bronze

Notes :

- Plated versions: add the required suffix to the catalog number. -TN for regular tin plating.
- Please contact factory for other sizes, combinations and availability.

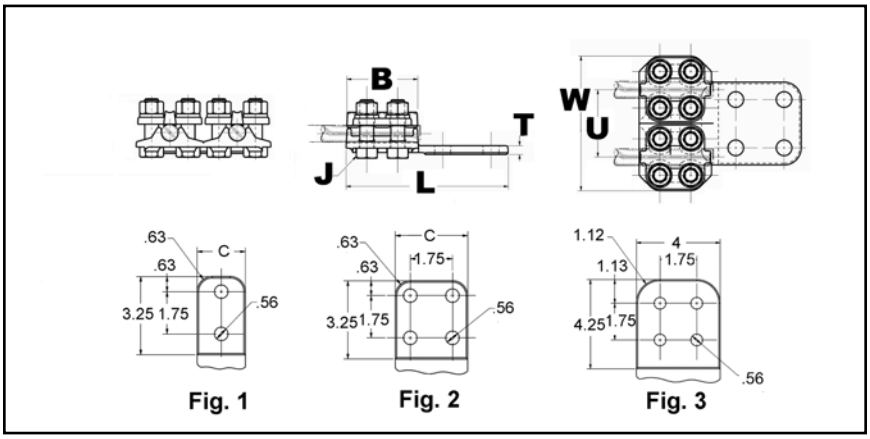

Catalog Number	Fig. #	Copper Stranded Range	Copper Solid Range	B	J Dia.	L	C	T	W	U
N2AH29-2N	1	6 AWG-250 kcmil	6 AWG-4/0 AWG	2.62	1/2	5.87	1.50	0.32	4.88	2.44
N2AH29-34N	2	6 AWG-250 kcmil	6 AWG-4/0 AWG	2.62	1/2	5.87	3.00	0.32	4.88	2.44
N2AH34-2N	1	1/0 AWG-500 kcmil	1/0 AWG-4/0 AWG	2.62	1/2	5.87	2.00	0.32	5.44	2.88
N2AH34-34N	2	1/0 AWG-500 kcmil	1/0 AWG-4/0 AWG	2.63	1/2	6.13	3.00	0.38	5.40	2.88
N2AH34-44N	3	1/0 AWG-500 kcmil	1/0 AWG-4/0 AWG	2.63	1/2	7.00	4.00	0.38	5.38	2.88
N2AH40-34N	2	2/0 AWG-800 kcmil	2/0 AWG-4/0 AWG	2.63	1/2	5.88	3.00	0.38	5.70	2.92
N2AH44-34N	2	4/0 AWG-1000 kcmil	4/0 AWG	2.88	1/2	6.38	3.00	0.50	6.12	3.12
N2AH44-44N	3	4/0 AWG-1000 kcmil	4/0 AWG	2.88	1/2	7.32	4.00	0.50	6.12	3.12
N2AH44-44NHQ	3	4/0 AWG-1000 kcmil	4/0 AWG	2.88	1/2	7.20	4.00	0.50	6.12	3.12
N2AH46-44N	3	1000 kcmil-1500 kcmil	N/A	3.07	1/2	7.46	4.00	0.75	6.50	3.36
N2AH48-44N	3	1000 kcmil-1500 kcmil	N/A	3.25	1/2	7.62	4.00	0.75	9.50	4.00

TYPE VA

VARILUG™

For Use On Copper Cable

High copper alloy terminal for joining a wide range of cable to equipment pads or bar. Particularly suitable for use on extra flexible cable. One-wrench installation. Type VVA, twin elements secure joint against vibration and flexing. Particularly recommended for use on extra flexible cables. One-wrench installation.

Material: Bronze Alloy
Hardware: DURIUM™ Silicon Bronze

Notes :

- Plated versions: add the required suffix to the catalog number. -TN for regular tin plating.
- Please contact factory for other sizes,
- combinations and availability
- Choose type VVA with twin elements for additional joint strength against vibration and flexing. Particularly recommended for use on flexible cables.

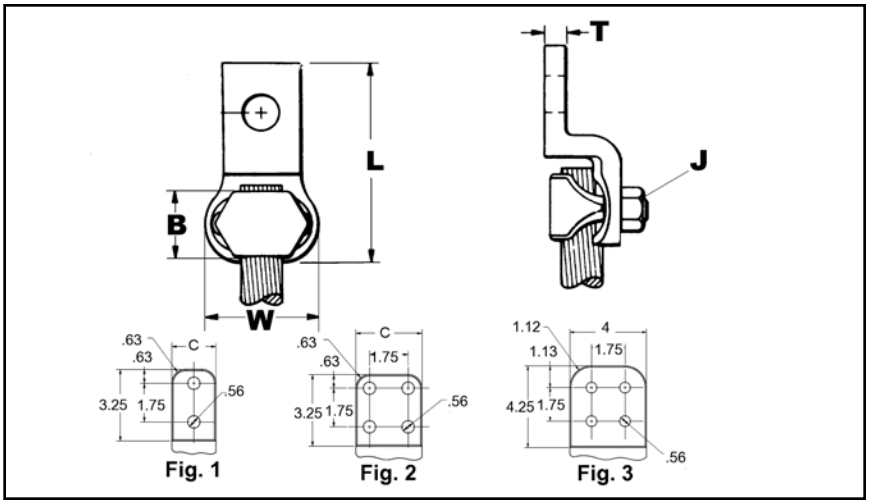

Catalog Number *	Fig. #	Copper Stranded Range	Copper Solid Range	C	B	J Dia.	L	T	W
VA4C	—	8 AWG-4 AWG	8 AWG-4 AWG	0.75	0.69	7/16	2.38	0.22	0.81
VA2C	—	8 AWG-2 AWG	8 AWG-2 AWG	0.81	0.81	3/8	2.72	0.25	1.00
VA25	—	6 AWG-1/0	6 AWG-1/0 AWG	0.88	0.88	3/8	2.88	0.25	1.19
VA252	—			0.88	0.88	3/8	3.63	0.25	1.19
VA28	—	1/0 AWG-4/0 AWG	1/0 AWG-4/0 AWG	1.06	1.09	3/8	2.84	0.31	1.69
VA28-2N	1			1.06	1.09	3/8	4.94	0.31	1.69
VA30	—	1/0 AWG-300 kcmil	1/0 AWG-4/0 AWG	1.13	1.09	3/8	3.22	0.31	1.91
VA30-2N	1			1.12	1.09	7/16	5.19	0.31	1.91
VA34	—	300 kcmil-500 kcmil	N/A	1.38	1.31	1/2	3.81	0.38	2.22
VA34-2N	1			1.38	1.31	1/2	5.38	0.38	2.22
VA344	—			1.88	1.31	7/16	4.22	0.38	2.22
VA40	—	500 kcmil-800 kcmil		1.63	1.34	9/16	4.47	0.38	2.63
VA40-2N	1			1.62	1.34	9/16	5.81	0.38	2.62
VA404	—			1.88	1.34	9/16	4.72	0.38	2.63
VA40-4N	2			3.00	1.34	9/16	5.81	0.38	2.62
VA44	—	750 kcmil-1000 kcmil		1.88	1.41	5/8	4.78	0.50	2.88
VA444	—			2.13	1.41	5/8	5.16	0.50	2.88
VA462N	1	1000 kcmil-1500 kcmil		2.25	2.00	5/8	6.44	0.56	3.25

* "N" indicates NEMA standard stud holes.

Blue highlighted items are industry standard and most frequently ordered.

TYPE VVA

VARILUG™

For Use On Copper Cable

High copper alloy terminal for joining a wide range of cable to equipment pads or bar. Particularly suitable for use on extra flexible cable. One-wrench installation.

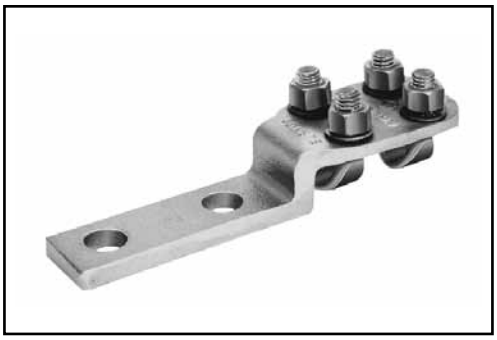

Material: Bronze Alloy
Hardware: DURIUM™ Silicon Bronze

Notes :
- Plated versions: add the required suffix to the catalog number. -TN for regular tin plating
- Please contact factory for other sizes, combinations and availability

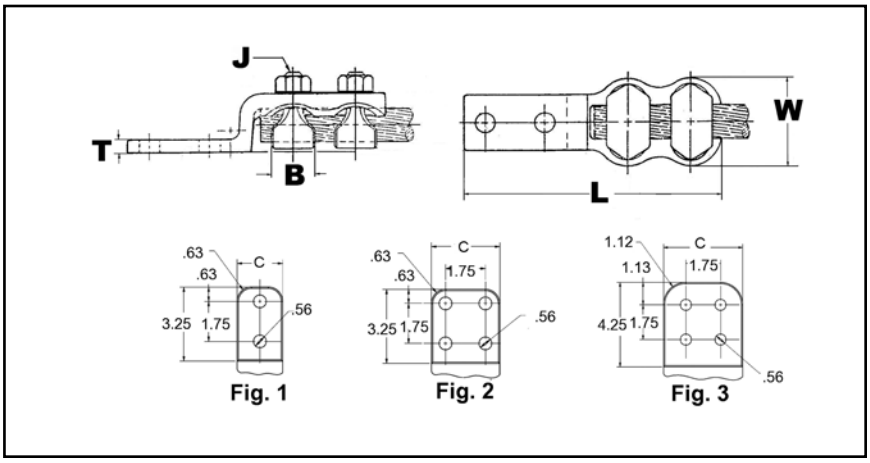

Catalog Number *	Fig. #	Copper Stranded Range	Copper Solid Range	C	B	J Dia.	L	T	W
VVA2C	—	8 AWG-2 AWG	8 AWG-2 AWG	0.81	0.81	3/8	4.06	0.25	1.00
VVA25	—	6 AWG-1/0	6 AWG-1/0 AWG	0.88	0.88	3/8	4.31	0.25	1.19
VVA25-2	—	1/0 AWG-4/0 AWG		0.88	0.88	3/8	5.06	0.25	1.19
VVA28	—		1/0 AWG-4/0 AWG	1.06	1.09	3/8	4.13	0.31	1.69
VVA28-2N	1			1.06	1.09	3/8	6.19	0.31	1.69
VVA30	—	300 kcmil	1/0 AWG-4/0 AWG	1.13	1.09	7/16	4.63	0.31	1.94
VVA30-2N	1			1.13	1.09	7/16	6.56	0.31	1.94
VVA30-4N	2			3.00	1.09	7/16	6.75	0.38	1.91
VVA34	—	300 kcmil-500 kcmil	N/A	1.38	1.31	1/2	5.31	0.38	2.25
VVA34-2N	1			1.30	1.31	1/2	6.88	0.38	2.22
VVA34-4	—			1.88	1.31	7/16	5.75	0.38	2.25
VVA34-4N	2			3.13	1.31	7/16	7.00	0.38	2.38
VVA40	—	500 kcmil-800 kcmil		1.63	1.34	9/16	6.38	0.38	2.63
VVA40-2N	1			1.62	1.34	9/16	7.69	0.38	2.62
VVA40-4N	2			3.00	1.34	9/16	7.69	0.38	2.62
VVA40-4NCG1	—			3.50	0.88	9/16	7.69	0.38	2.62
VVA44-2N	1	750 kcmil-1000 kcmil		1.88	1.41	5/8	8.12	0.50	2.88
VVA44-4N	2			3.00	1.41	5/8	8.06	0.50	2.88
VVA46-2N	1	1000 kcmil-1500 kcmil		2.25	2.00	5/8	8.69	0.56	3.25
VVA46-4NCG2	—			3.50	2.00	5/8	8.75	0.56	3.25
VVA46-4NCG4	—			3.50	2.00	5/8	5.50	0.56	3.23
VVA48-2N	1	1500 kcmil-2000 kcmil		2.62	2.25	3/4	9.23	0.62	3.75

* "N" indicates NEMA standard stud holes.

Blue highlighted items are industry standard and most frequently ordered.

TYPE XA

BOLTED EXPANSION TERMINALS

For Copper Tube to Flat

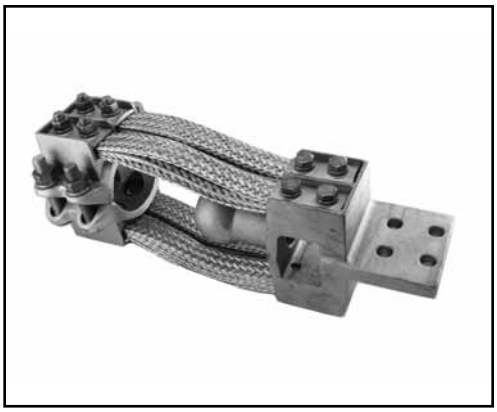

High copper alloy expansion terminal for tube to flat. Provides for longitudinal movement of tubing. Extra flexible braid carries full load of joint. One-wrench installation.

Material: Copper Alloy
Hardware: DURIUM™ Silicon Bronze

Notes :
- Plated versions: add the required suffix to the catalog number. -TN for regular tin plating.
- Please contact factory for other sizes, combinations and availability.
- Installation instructions available upon request.

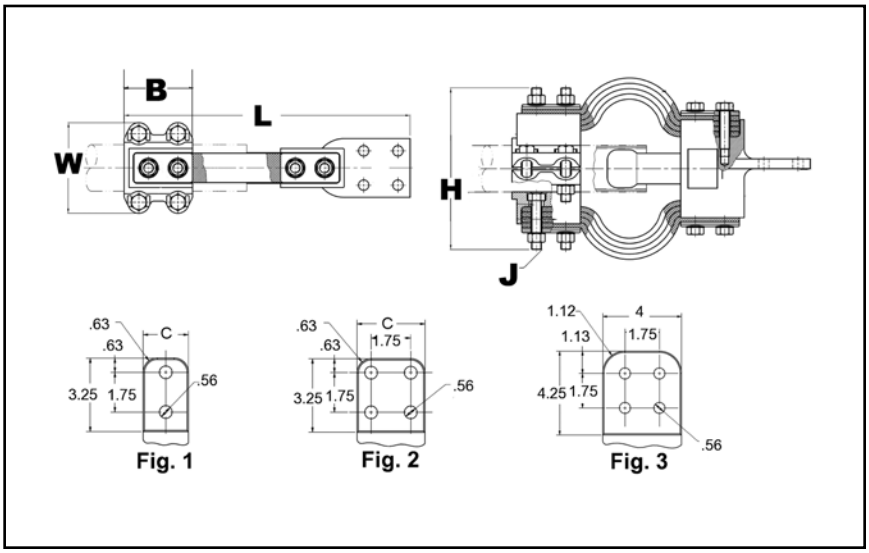

Catalog Number	Fig. #	Copper Pipe (Std)	Copper Pipe (EH)	B	C	J Dia.	L	H	W
XA132N	1	1/2 IPS	N/A	3.00	1.50	3/8	12.00	3.88	3.06
XA142N	1	3/4 IPS			1.63	3/8	12.00	4.06	3.13
XA144N	2				3.00	3/8	12.50	4.12	3.12
XA152N	1	1 IPS			1.88	3/8	12.75	4.31	3.13
XA154N	2				3.00	3/8	12.75	4.31	3.13
XA162N	1	1 1/4 IPS		3.50	2.25	1/2	14.50	5.81	4.31
XA164N	2				3.00	1/2	14.75	5.81	4.31
XA172N	1	1 1/2 IPS			2.50	1/2	15.00	6.06	4.31
XA174N	2				3.00	1/2	15.25	6.06	4.31
XA184N	2	2 IPS			3.00	1/2	15.25	7.00	4.62
XA194N	2	2 1/2 IPS		4.00	3.75	1/2	16.13	7.50	5.25
XA204N	2	3 IPS			4.38	5/8	16.69	7.94	6.50
XA214N	2	3 1/2 IPS			4.75	5/8	16.94	8.25	6.81
XA224N	2	4 IPS			5.25	5/8	17.00	9.44	7.44
XA574N	2	N/A	1 1/2 IPS	3.50	3.00	1/2	14.38	6.44	4.31
XA594N	2		2 1/2 IPS	4.00	3.75	1/2	14.75	9.56	5.25

Blue highlighted items are industry standard and most frequently ordered.

TYPE NT

T-CONNECTORS

For Use On Tube To Tube T (6 BOLTS)

High copper alloy T-Connector for tubing run and tap. Slots between bolts provide independent high-pressure areas of contact. One-wrench instiallation.

Material: Copper Alloy
Hardware: DURIUM™ Silicon Bronze

Notes :

- Plated versions: add the required suffix to the catalog number. -TN for regular tin plating.
- Items with -HC suffix have hex head bolts; items without the suffix can be either hex head or oval shank head. Both head styles are one wrench installation and offer the same clamping force and functionalities.
- Please contact factory for other sizes, combinations and availability.
- One-wrench installation.

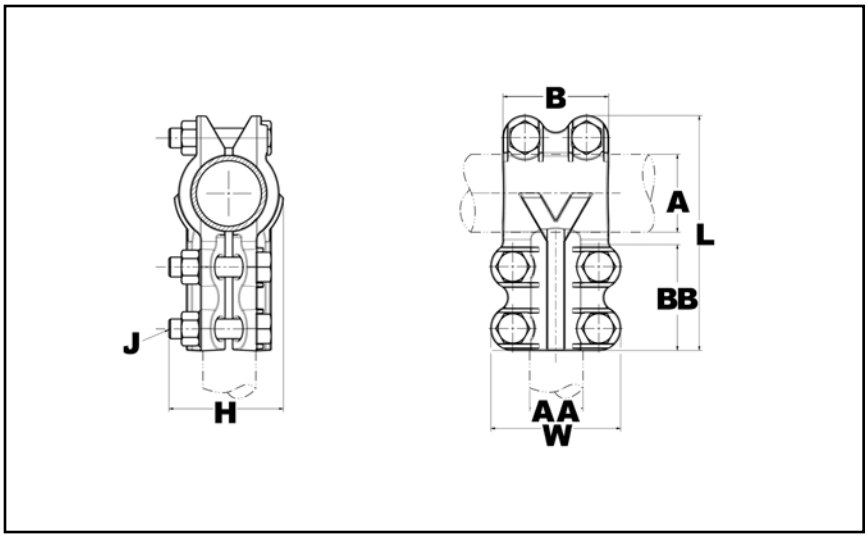

Catalog Number	A Run Copper Pipe	AA Tap Copper Pipe	B	J Dia.	BB	L	H	W
NT1313	1/2 IPS	1/2 IPS	2.00	3/8	2.00	4.13	1.94	2.44
NT1413	3/4 IPS	1/2 IPS			2.00	4.13	1.94	2.25
NT1414		3/4 IPS			2.00	4.13	1.94	2.44
NT1514	1 IPS	3/4 IPS			2.00	4.38	2.13	2.44
NT1515		1 IPS			2.00	4.44	2.13	2.75
NT1614	1 1/4 IPS	3/4 IPS			2.00	4.75	2.44	2.44
NT1615		1 IPS			2.00	4.75	2.44	2.75
NT1616		1 1/4 IPS	2.69	1/2	2.69	5.69	2.63	3.50
NT1714	1 1/2 IPS	3/4 IPS	2.00	3/8	2.00	5.06	2.69	2.44
NT1715		1 IPS			2.00	5.06	2.69	2.75
NT1717		1 1/2 IPS	2.69	1/2	2.69	6.06	2.75	3.94
NT1816	2 IPS	1 1/4 IPS			2.69	6.56	2.69	3.50
NT1817		1 1/2 IPS			2.69	6.63	3.25	3.94
NT1818		2 IPS	3.06		2.69	6.69	3.31	4.62
NT1919	2 1/2 IPS	2 1/2 IPS	3.63		2.69	7.25	3.88	5.25
NT2020	3 IPS	3 IPS	4.31	5/8	3.25	8.63	4.63	6.19
NT2121	3 1/2 IPS	3 1/2 IPS	4.88		3.25	9.25	5.19	6.81
NT2222	4 IPS	4 IPS	5.44		3.25	9.81	5.75	7.44

Blue highlighted items are industry standard and most frequently ordered.

TYPE NSNT

T-CONNECTORS

For Use On Tube Or Cable To Cable T

High copper alloy reversible T-Connector for joining a wide range of run and tap cables. Connector is designed for one-wrench installation. “S” standard 3/8 in hardware and “H” heavy duty 1/2 in hardware.

Material: Copper Alloy
Hardware: DURIUM™ Silicon Bronze

Notes :

- Plated versions: add the required suffix to the catalog number. -TN for regular tin plating.
- Please contact factory for other sizes, combinations and availability.
- One-wrench installation.

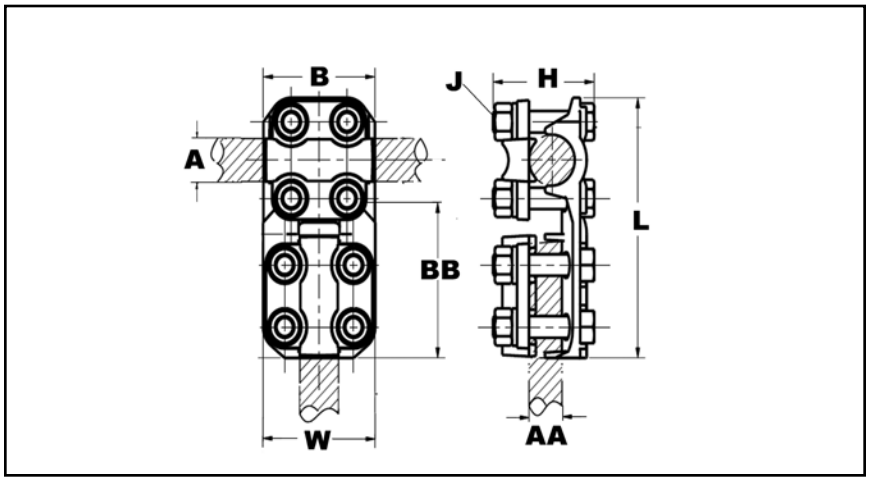

Catalog Number	A Pipe Run	A Cable Run	AA ① Cable Tap Range	B	J Dia.	BB	L	H	W
NSNT1329	1/2 IPS	N/A	6 AWG-250 kcmil	2.00	3/8	2.38	5.08	2.00	1.96
NSNT1429	3/4 IPS		6 AWG-250 kcmil	2.00	3/8	2.38	5.08	2.00	1.96
NSNT1434			1/0 AWG-500 kcmil	2.00	3/8	2.38	5.08	2.10	2.20
NSNT1529	1 IPS		6 AWG-250 kcmil	2.00	3/8	2.38	5.34	2.00	1.96
NSNT1629	1 1/4 IPS		6 AWG-250 kcmil	2.00	3/8	2.38	5.78	2.37	1.96
NSNT2929	—	6 AWG-250 kcmil	6 AWG-250 kcmil	2.38	3/8	2.38	4.60	1.75	1.96
NSNT3429		1/0 AWG-500 kcmil	6 AWG-250 kcmil	2.38	3/8	2.38	4.84	2.00	1.96
NSNT3434			1/0 AWG-500 kcmil	2.38	3/8	2.38	4.84	2.00	2.20

① Complete cable range may be accommodated by reversing cap.

TYPE NHNT

T-CONNECTORS

For Use On TUBE TO CABLE T

High copper alloy reversible T-Connector for joining a wide range of run pipe and tap cables. Connector is designed for one-wrench installation.

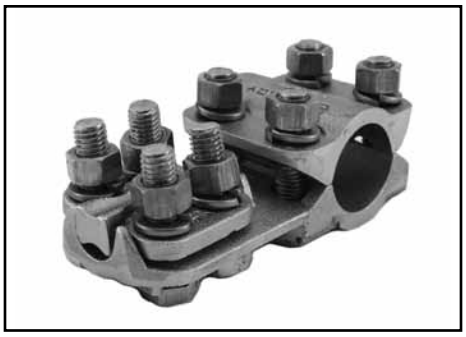

Material: Copper Alloy
Hardware: DURIUM™ Silicon Bronze

Notes :

- Plated versions: add the required suffix to the catalog number. -TN for regular tin plating.
- Please contact factory for other sizes, combinations and availability.
- One-wrench installation.

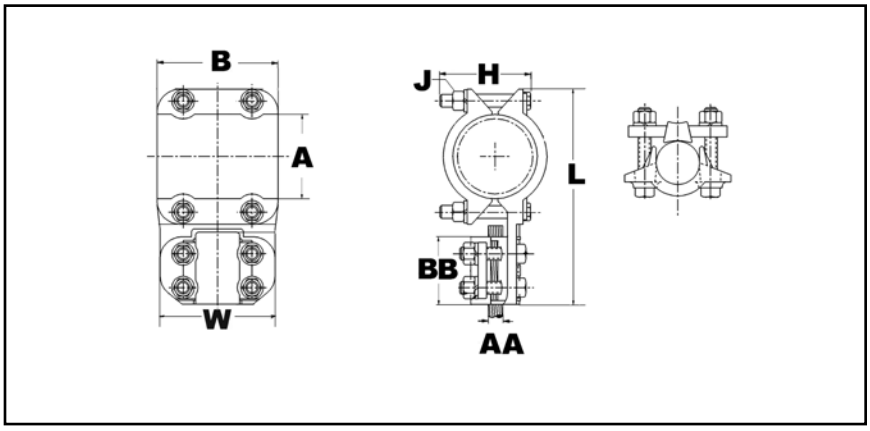

Catalog Number	A Pipe Run	AA ① Cable Tap Range	B	J Dia.	BB	L	H	W
NHNT1429	3/4 IPS	6 AWG-250 kcmil	2.25	1/2	2.62	5.82	2.32	2.44
NHNT1434		1/0 AWG-500 kcmil	2.25	1/2	2.62	5.82	2.42	2.56
NHNT1529	1 IPS	6 AWG-250 kcmil	2.25	1/2	2.62	5.92	2.57	2.44
NHNT1534		1/0 AWG-500 kcmil	2.25	1/2	2.62	5.92	2.57	2.56
NHNT1540		2/0 AWG-800 kcmil	2.25	1/2	2.62	5.92	2.60	2.78
NHNT1629	1 1/4 IPS	6 AWG-250 kcmil	2.69	1/2	2.62	6.32	2.57	2.44
NHNT1634		1/0 AWG-500 kcmil	2.69	1/2	2.62	6.32	2.60	2.56
NHNT1640		2/0 AWG-800 kcmil	2.69	1/2	2.62	6.32	2.68	2.78
NHNT1644		4/0 AWG-1000 kcmil	2.69	1/2	2.88	6.58	2.69	2.90
NHNT1729	1 1/2 IPS	6 AWG-250 kcmil	2.69	1/2	2.62	6.76	2.70	2.44
NHNT1734	1 1/2 IPS	1/0 AWG-500 kcmil	2.69	1/2	2.62	6.76	2.70	2.56
NHNT1740	1 1/2 IPS	2/0 AWG-800 kcmil	2.69	1/2	2.62	6.76	2.78	2.78
NHNT1744		4/0 AWG-1000 kcmil	2.69	1/2	2.88	7.02	2.80	2.90
NHNT1829	2 IPS	6 AWG-250 kcmil	2.69	1/2	2.62	7.44	3.06	2.44
NHNT1834		1/0 AWG-500 kcmil	2.69	1/2	2.62	7.44	3.06	2.56
NHNT1840		2/0 AWG-800 kcmil	2.69	1/2	2.62	7.44	3.06	2.78
NHNT1844		4/0 AWG-1000 kcmil	2.69	1/2	2.88	7.70	3.06	2.90
NHNT1846		1000 kcmil-1500 kcmil	2.69	1/2	3.06	7.88	3.23	3.16
NHNT1929	2 1/2 IPS	6 AWG-250 kcmil	2.69	1/2	2.62	8.06	3.64	2.44
NHNT1934		1/0 AWG-500 kcmil	2.69	1/2	2.62	8.06	3.64	2.56
NHNT1940		2/0 AWG-800 kcmil	2.69	1/2	2.62	8.06	3.64	2.78
NHNT1944		4/0 AWG-1000 kcmil	2.69	1/2	2.88	8.32	3.64	2.90
NHNT1946		1000 kcmil-1500 kcmil	2.69	1/2	3.06	8.50	3.64	3.16
NHNT2040	3 IPS	2/0 AWG-800 kcmil	2.69	1/2	2.88	8.69	4.26	2.78
NHNT2044		4/0 AWG-1000 kcmil	2.69	1/2	5.75	8.95	4.26	2.90
NHNT2229	4 IPS	6 AWG-250 kcmil	3.25	1/2	2.63	10.38	4.26	2.50

① Complete cable range may be accommodated by reversing cap.

Blue highlighted items are industry standard and most frequently ordered.

TYPE VT

T-CONNECTORS

For Use On Copper Cable to Cable

High copper alloy T-connector for cable run, cable tap. V-bolt clamping elements accommodate large range of cable and are particularly suited for extra flexible cable. One-wrench installation.

Material: Copper Alloy
Hardware: DURIUM™ Silicon Bronze

Notes :
- Plated versions: add the required suffix to the catalog number. -TN for regular tin plating.
- Please contact factory for other sizes, combinations and availability.
- One-wrench installation.

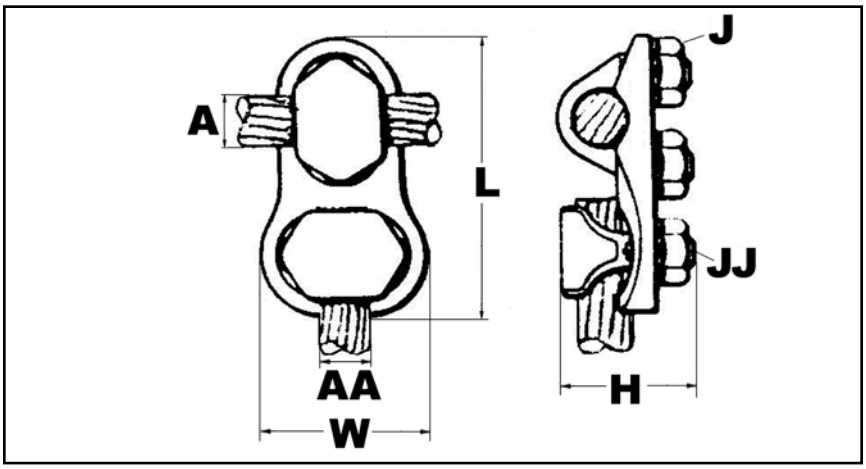

Catalog Number	A - Cable Run Range	AA - Cable Tap Range	J Dia.	JJ Dia.	L	H	W
VT2C2C	8 AWG-2 AWG	8 AWG-2 AWG	5/8	5/8	2.31	1.38	1.00
VT2525	6 AWG-1/0 AWG	6 AWG-1/0 AWG	3/4	3/4	1.37	0.38	0.56
VT2825	1/0 -4/0 AWG	6 AWG-1/0 AWG	3/8	3/4	3.12	1.62	1.25
VT2828	1/0 -4/0 AWG	1/0 -4/0 AWG	3/8	3/8	2.94	0.38	0.31
VT3028	1/0 -300 kcmil	1/0 -4/0 AWG	7/16	3/8	3.19	1.88	1.69
VT4034	500 kcmil-800 kcmil	300 kcmil-500 kcmil	9/16	1/2	4.13	2.56	2.25
VT4430	750 kcmil-1000 kcmil	1/0 -300 kcmil	5/8	7/16	4.25	2.88	1.94
VT4434		300 kcmil-500 kcmil	5/8	1/2	4.38	3.34	2.25
VT4440		500 kcmil-800 kcmil	5/8	9/16	4.75	2.88	2.63
VT4444		750 kcmil-1000 kcmil	5/8	5/8	4.88	2.88	2.88
VT4628	1000 kcmil-1500 kcmil	1/0 -4/0 AWG	5/8	3/8	4.50	3.81	1.69
VT4630		1/0 -300 kcmil	5/8	7/16	4.63	3.81	1.94
VT4640		500 kcmil-800 kcmil	5/8	9/16	5.13	3.81	2.63
VT4830	1500 kcmil-2000 kcmil	1/0 -300 kcmil	3/4	7/16	5.13	4.25	1.94
VT4840		500 kcmil-800 kcmil	3/4	9/16	5.63	4.25	2.63
VT4844		750 kcmil-1000 kcmil	3/4	5/8	5.75	4.25	2.88
VT4848		1500 kcmil-2000 kcmil	3/4	3/4	6.25	4.25	3.75

Blue highlighted items are industry standard and most frequently ordered.

TYPE NS

COUPLERS

For Use On Straight Tube To Tube

High copper alloy coupler for joining equal sizes of tube end to end. Slots between bolts provide independent high pressure areas of contact. One-wrench installation.

Material: Copper Alloy
Hardware: DURIUM™ Silicon Bronze

Notes :

- Plated versions: add the required suffix to the catalog number. -TN for regular tin plating.
- W for extra thick tin plating (including hardware).
- Items with -HC suffix have hex head bolts; items without the suffix can be either hex head or oval shank head. Both head styles are one wrench installation and offer the same clamping force and functionalities.
- Please contact factory for sizes, combinations and availability.

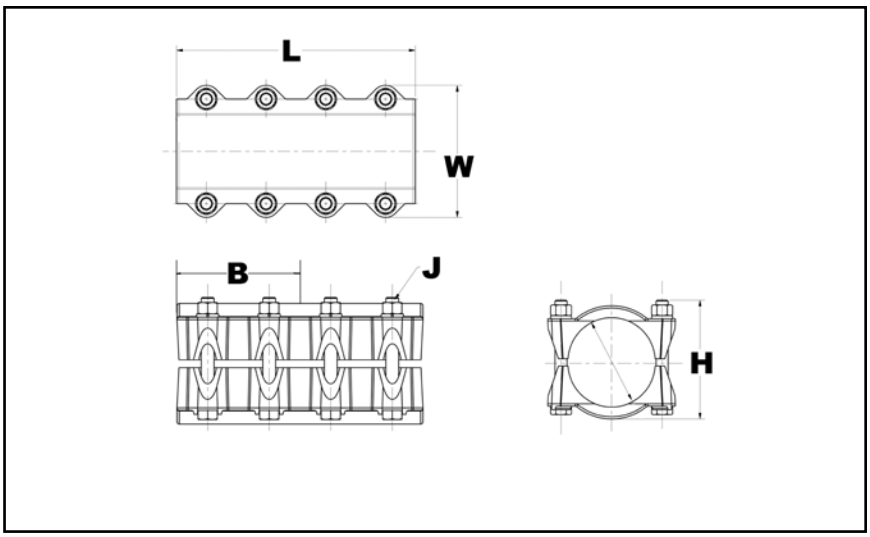

Catalog Number	Copper Conductor	B	J Dia.	L	H	W
NS1212	3/8 IPS	1.50	3/8	3.00	1.44	1.94
NS1313	1/2 IPS	1.63	3/8	3.25	1.69	2.25
NS14148HC	3/4 IPS	2.69	1/2	5.75	2.32	2.81
NS1414HC		2.69	3/8	5.38	2.32	2.81
NS1515	1 IPS	2.13	3/8	4.25	2.13	2.75
NS1515HC		2.69	1/2	5.62	2.32	3.25
NS1515HCHQ		2.69	1/2	5.63	2.36	3.22
NS1616HC	1 1/4 IPS	2.69	1/2	5.75	2.57	3.50
NS1717	1 1/2 IPS	2.88	1/2	5.75	2.75	3.94
NS1717HC		2.69	1/2	5.75	2.81	3.94
NS1717HCHQ		2.69	1/2	5.75	2.61	3.94
NS1818	2 IPS	2.88	1/2	5.75	3.31	4.63
NS1818CG2		2.69	1/2	5.36	3.06	4.62
NS1818HC		2.69	1/2	5.75	3.31	4.62
NS1919	2 1/2 IPS	2.88	1/2	5.75	3.88	5.25
NS1919HC		2.69	1/2	5.75	3.96	5.25
NS1919HCHQ		2.69	1/2	5.75	3.56	5.18
NS2020	3 IPS	3.63	5/8	7.25	4.63	6.19
NS2020HC		3.25	5/8	7.25	4.64	6.19
NS2121	3 1/2 IPS	4.00	5/8	8.00	5.19	6.81
NS2121HC		3.25	5/8	7.25	5.20	6.81
NS2222	4 IPS	4.25	5/8	8.50	5.75	7.44
NS2222HC		3.25	5/8	7.25	5.76	7.44

Blue highlighted items are industry standard and most frequently ordered.

TYPE XP

EXPANSION COUPLERS

For Use On Copper Tube to Tube

High alloy copper expansion coupler for joining equa
size tube on end. Extra flexible tinned copper brai
allows longitudinal movement of the tube. Type XP ha
alignment guide. One-wrench installation.

Material: Copper Alloy
Hardware: DURIUM™ Silicon Bronze

Notes :

- Items with "-HC" suffix have hex head bolts; items without the suffix can be either hex head or oval shank head. Both head styles are one wrench installation and offer the same clamping force and functionalities.
- Installation instructions available upon request.
- For other sizes or configurations, please call factory.

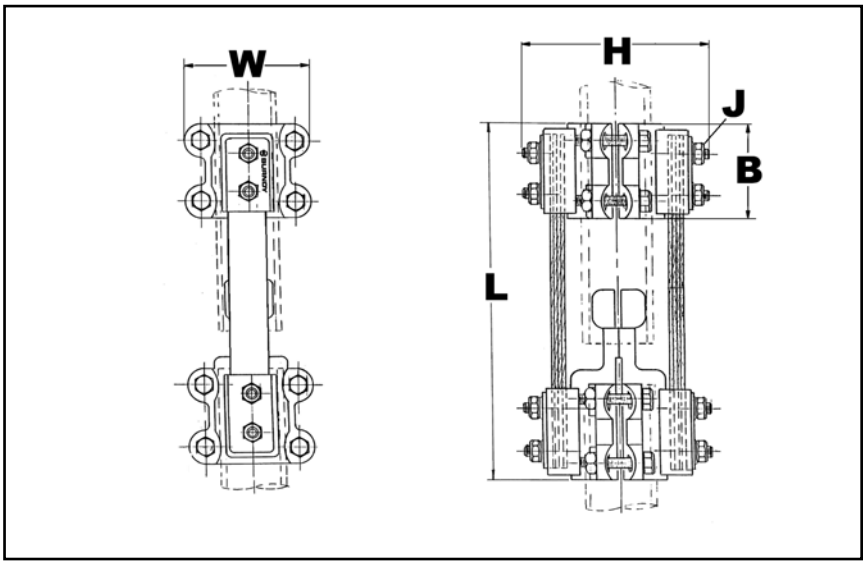

Catalog Number	Copper Pipe Size	Copper EH Pipe Size	B	J Dia.	L	H	W
XP1313	1/2 IPS	—	3.00	3/8	8.75	3.88	3.06
XP1414	3/4 IPS	—			8.75	4.06	3.13
XP1515	1 IPS	—			9.50	4.31	3.13
XP1616	1 1/4 IPS	—	3.50	1/2	11.50	5.81	4.31
XP1717	1 1/2 IPS	—			12.00	6.44	4.31
XP1818	2 IPS	—			12.00	7.00	4.63
XP1919	2 1/2 IPS	—	4.00		13.00	8.50	5.25
XP1919HC		—			13.00	8.50	5.25
XP2020	3 IPS	—		5/8	13.50	7.75	6.50
XP2121	3 1/2 IPS	—			13.63	8.00	6.81
XP2222	4 IPS	—			13.63	9.06	7.44
XP5656	1 1/4 IPS	1 1/4 IPS	3.50	1/2	11.56	5.82	4.24

Blue highlighted items are industry standard and most frequently ordered.

TYPE UH

BUS SUPPORTS

For Use On Copper Tube

High copper alloy bus support for mounting tube on a post or pedestal type insulator. Single bolt allows rotation to any angle. Rotate cap 180° for slip or rigid fit. One wrench installation. Supplied with hardware for mounting to cap of insulator. Specify base mounting hardware, if required, by adding suffix "B" to catalog number.

Material: Copper Alloy
Hardware: DURIUM™ Silicon Bronze

Notes :
- One wrench installation
- Specify base mounting hardware, if required, by adding suffix "-B" to catalog number.
- For other sizes and availability, please contact factory.

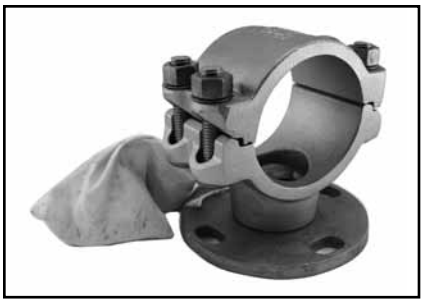

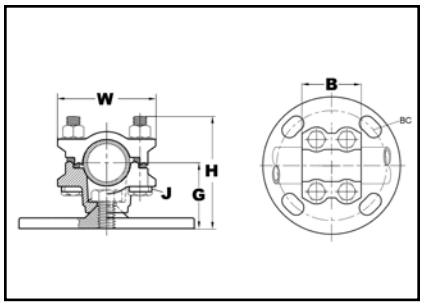

Catalog Number	Copper Pipe Size	BC	G	J Dia.	B	H	W
UH143	3/4 IPS	3	2.00	3/8	2.50	2.88	2.63
UH153	1 IPS	3	2.00		2.50	3.00	2.88
UH155		5	2.25		2.50	3.25	2.88
UH163	1 1/4 IPS	3	2.25	1/2	2.69	3.44	3.50
UH165		5	2.38		2.69	3.56	3.50
UH173	1 1/2 IPS	3	2.50		3.00	3.81	3.81
UH175		5	2.50		3.00	3.81	3.81
UH183	2 IPS	3	2.75		3.00	4.31	4.63
UH185	2 IPS	5	2.75		3.00	4.31	4.63
UH193	2 1/2 IPS	3	3.13		3.00	5.00	5.25
UH195		5	3.13		3.00	5.00	5.25
UH203	3 IPS	3	3.63	5/8	3.25	5.81	6.19
UH205		5	3.63		3.25	5.81	6.19
UH225	4 IPS	5	4.50		3.25	7.25	7.50

TYPE UHR

BUS SUPPORTS

For Use On Copper Cable or Tube

High copper alloy bus support clamp for mounting a wide range of cable or tube on post or pedestal type insulators. Single bolt allows rotation to any angle. Supplied with hardware for mounting to cap of insulator. Specify base mounting hardware, if required, by adding suffix "-B" to catalog number.

Material: Copper Alloy
Hardware: DURIUM™ Silicon Bronze

Notes :
- One wrench installation
- Specify base mounting hardware, if required, by adding suffix "-B" to catalog number
- For other sizes and availability, please contact factory

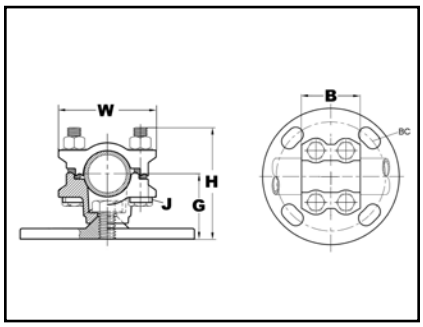

Catalog Number	Copper Stranded Range	Copper Pipe Size	BC	G	J Dia.	B	H	W
UHR133	6 AWG - 500 kcmil	1/8 IPS - 1/2 IPS	3	1.75	3/8	3.63	3.00	2.25
UHR135			5	2.13	3/8	3.63	3.38	2.25
UHR153	4/0 AWG - 1250 kcmil	1/4 IPS - 1 IPS	3	2.00	3/8	3.75	3.50	2.75
UHR153SS			3	2.00	3/8	3.75	3.50	2.75
UHR155			5	2.25	3/8	3.75	3.75	2.75
UHR173	750 kcmil - 2500 kcmil	3/4 IPS - 1 1/2 IPS	3	2.50	1/2	2.88	4.25	3.94
UHR175			5	2.50	1/2	2.88	4.25	3.94
UHR183	N/A	1 1/4 IPS - 2 IPS	3	2.75	1/2	2.81	4.75	4.63
UHR185			5	2.75	1/2	2.81	4.75	4.63

* With maximum conductor in place.

Blue highlighted items are industry standard and most frequently ordered.

TYPE LH

BUS SUPPORTS

For Use On Copper Cable or Tube

High copper alloy, light duty bus support for mounting a wide range of cable or tube on post or pedestal type insulators. One-wrench installation. Supplied with hardware for mounting to cap of insulator. Specify base mounting hardware, if required, by adding suffix "-B" to Catalog No.

Material: Copper Alloy
Hardware: DURIUM™ Silicon Bronze

Notes :
- One wrench installation.
- Specify base mounting hardware, if required, by adding suffix "-B" to catalog number.
- For applications requiring heavier duty product, please see our UH product line.
- For other sizes and availability, please contact factory.

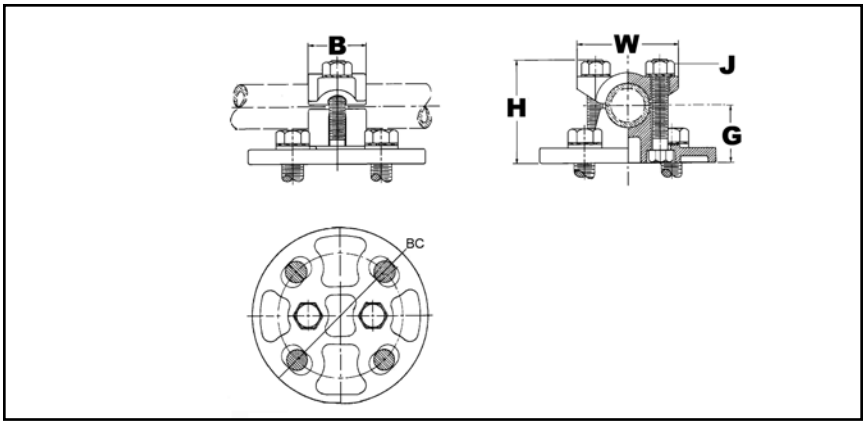

Catalog Number	Tube	Stranded Conductor	BC	G	J Dia.	B	H	W
LH283	N/A	6 AWG-4/0 AWG	3	1.25	3/8	1.69	2.62	4.25
LH343	1/4 IPS -1/2 IPS	2/0 AWG-500 kcmil	3	1.38	3/8	1.38	2.50	4.25
LH453	1/2 IPS-1 IPS	500 kcmil-1250 kcmil	3	1.50	1/2	1.62	3.19	4.44

TYPE LHR

BUS SUPPORTS

For Use On Cable Or Tube To Insulator

High copper alloy, bus support for mounting a wide range of cable or tube on post or pedestal type insulators. One-wrench installation. Supplied with hardware for mounting to cap of insulator.

Material: Copper Alloy
Hardware: DURIUM™ Silicon Bronze

Notes :
- One wrench installation.
- Specify base mounting hardware, if required, by adding suffix "-B" to Catalog Number.
- For applications requiring heavier duty product, please see our UH product line.
- For other sizes and availability, please contact factory.

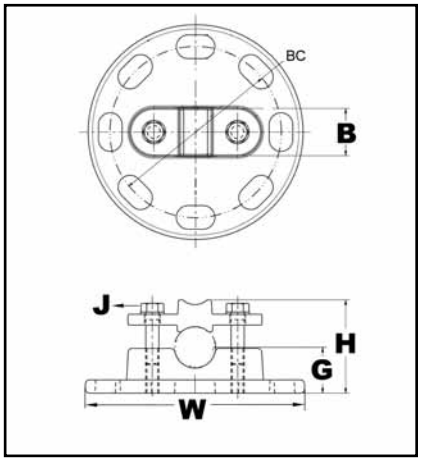

Catalog Number	Tube	Stranded Conductor	BC	G	J Dia.	B	H	W
LHR293	1/8 IPS-1/4 IPS	8 AWG-250 kcmil	3	1.23	3/8	1.00	2.03	4.25
LHR443	1/4 IPS-3/4 IPS	4/0 AWG-1000 kcmil	3	1.31	3/8	1.38	2.67	4.25
LHR445			5	1.33	3/8	1.00	2.51	6.25

Blue highlighted items are industry standard and most frequently ordered.

TYPE NDR

STUD CONNECTORS

For Copper Cable, Tube, Flat Bar

High copper alloy reversible and rotatable cap stud connector joins cable, tube and flat bar in-line or at right angles to equipment studs. Accommodates a wide range of cables or tubes. One-wrench installation.

Material: Copper Alloy
Hardware: DURIUM™ Silicon Bronze

Notes :
- Plated versions: add the required suffix to the catalog number. -TN for regular tin plating
- Please contact factory for other sizes, combinations and availability
- One-wrench installation.

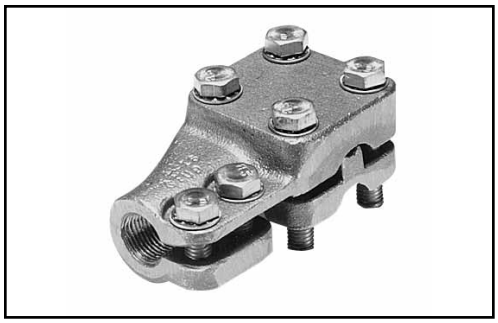

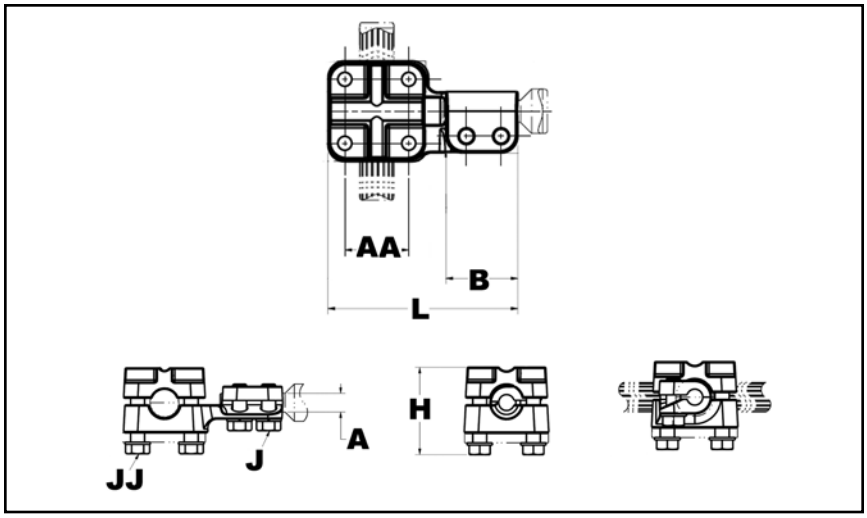

Catalog Number	Stud A	J Dia.	Threads per inch	B	AA Stranded Cable	JJ Dia.	L	H
NDR6334T13	1/2	3/8	13	1.62	6 AWG-500 kcmil	3/8	4.28	2.25
NDR6328T13			13	1.53	6 AWG-4/0 AWG	3/8	3.62	1.75
NDR6434T12	3/4		12	1.53	6 AWG-500 kcmil	3/8	4.09	2.24
NDR6434T16			16	1.53		3/8	4.09	
NDR6428T16			16	1.53	6 AWG-4/0 AWG	3/8	3.60	1.74
NDR6444T16			16	1.53	2 AWG-1000 kcmil	1/2	4.66	2.82
NDR64534T14	7/8		14	1.53	6 AWG-500 kcmil	3/8	4.16	1.91
NDR6534T12	1		12	1.53		3/8	3.96	2.24
NDR6534T14			14	1.53		3/8	3.96	
NDR6528T14			14	1.53	6 AWG-4/0 AWG	3/8	4.09	1.74
NDR6544T14			14	1.53	2 AWG-1000 kcmil	1/2	4.73	2.82
NDR65534T12	1-1/8		12	1.53	6 AWG-500 kcmil	3/8	3.97	2.24
NDR65528T12			12	1.53	6 AWG-4/0 AWG	3/8	4.12	1.75
NDR65544T12			12	1.53	2 AWG-1000 kcmil	1/2	4.66	2.82
NDR6748T12	1-1/2	1/2	12	2.03	4/0 AWG-2000 kcmil	1/2	5.78	3.25
NDR67548T12	1-3/4		12	2.03		1/2	6.56	2.51
NDR67544T12			12	2.03	2 AWG-1000 kcmil	1/2	6.28	3.12
NDR6848T12	2		12	2.03	4/0 AWG-2000 kcmil	1/2	6.56	2.82
NDR6844T12			12	2.03	2 AWG-1000 kcmil	1/2	6.12	2.88
NDR68544T12	2-1/4		12	2.50		1/2	6.81	3.12

Blue highlighted items are industry standard and most frequently ordered.

TYPE FD

STUD CONNECTORS

For Stud to Flat Bar

High copper alloy stud connector allows bolting cable and tubing terminals to equipment studs. Hex head captured bolts provide one-wrench installation. One pad contact surface is on centerline of stud. Pad is finished on both sides. All pads are four hole NEMA drilled.

Material: Copper Alloy
Hardware: DURIUM™ Silicon Bronze

Notes :
- Plated versions: add the required suffix to the catalog number. -TN for regular tin plating
- Pad is finished on both sides
- Amperage rating given is for indoor conditions
- Please contact factory for other sizes, combinations and availability
- One-wrench installation

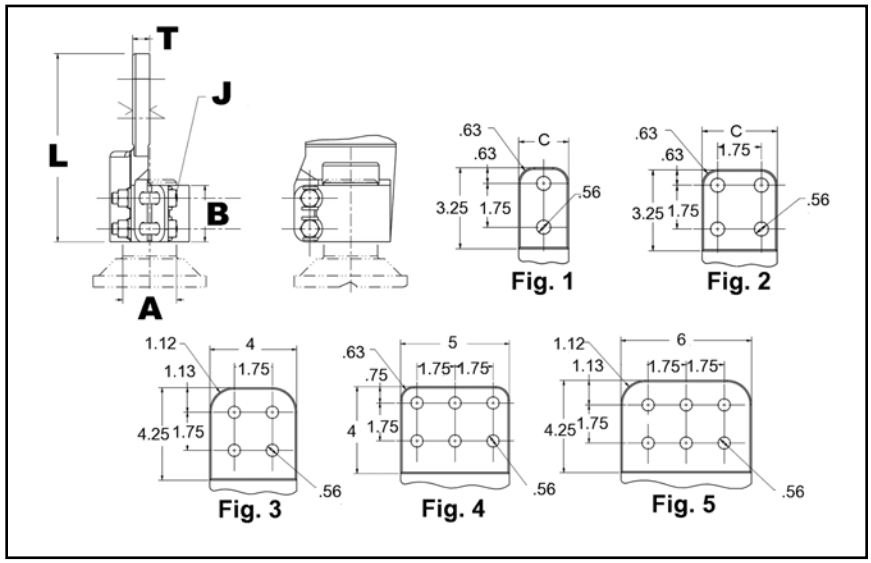

Catalog Number	Fig. #	Stud A	Threads per inch	Nominal Ampere Rating	B	J Dia.	L	T
FD64C5T16	2	3/4	16	1000	1.75	3/8	5.72	5/16
FD65C6T14	2	1	14	1075	1.75	3/8	5.72	3/8
FD655C6	2	1-1/8	12	1075	1.75	3/8	5.80	3/8
FD655D6	3		12	1300	1.75	3/8	6.86	3/8
FD66C6	2	1-1/4	12	1075	1.75	3/8	5.78	3/8
FD66D6	3		12	1300	1.75	3/8	6.84	3/8
FD675C8	2	1-3/4	12	1100	2.18	1/2	6.32	1/2
FD675D8	3		12	1450	2.18	1/2	7.39	1/2
FD68C8	2	2	12	1100	2.18	1/2	6.35	1/2
FD68D8	3		12	1450	2.18	1/2	7.42	1/2
FD68D12	3		12	2100	2.18	1/2	7.42	3/4
FD685C8	2	2-1/4	12	1100	2.50	1/2	6.71	1/2
FD685D8	3		12	1450	2.50	1/2	7.77	1/2
FD685D12	3		12	2100	2.50	1/2	7.77	3/4
FD69C8	2	2-1/2	12	1100	2.50	1/2	6.77	1/2
FD69D8	3		12	1450	2.50	1/2	8.03	1/2
FD69D12	3		12	2100	2.50	1/2	8.03	3/4
FD70D12	3	3	12	2100	2.88	5/8	8.26	3/4
FD70D16	3		12	3000	2.88	5/8	8.24	1

Blue highlighted items are industry standard and most frequently ordered.

TYPE QGFL

BARTAP™

For Copper Cable to Flat

High copper alloy BARTAP™ for joining a range of cable to bar or pad. One-wrench installation.

Material: Copper Alloy

Notes :
- Can be installed side by side or in-line on NEMA drilled bar.

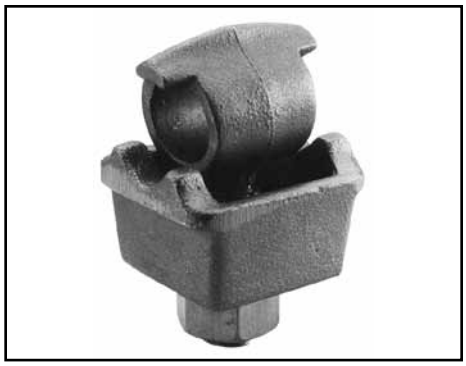

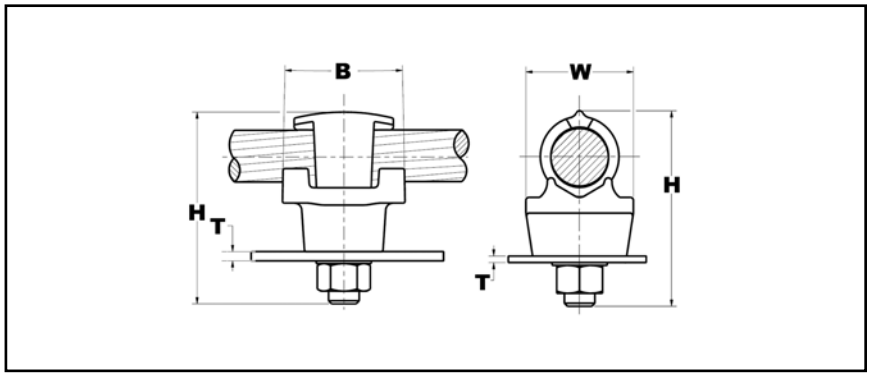

Catalog Number	Copper Conductor	B	H	J Dia.	T (Max)	W
QGFL1CB1	#10 Sol-#1 Str	1-1/8	1-7/8	3/8	1/4	1
QGFL1CB1T6	#10 Sol-#1 Str	1-1/8	2-3/8	3/8	3/4	1
QGFL26B1	#8 Sol-#2/0 Str	1-1/4	2-1/8	3/8	1/4	1-1/8
QGFL26B1T6	#8 Sol-#2/0 Str	1-1/4	2-5/8	3/8	3/4	1-1/8
QGFL26B2*	#8 Sol-#2/0 Str	1-1/4	2-8/25	1/2	1/4	1-1/8
QGFL26B2T6*	#8 Sol-#2/0 Str	1-1/2	2-40/50	1/2	3/4	1-1/8
QGFL29B1*	#6 Str-250 kcmil	1-2/5	2-5/8	1/2	1/4	1-3/8
QGFL29B1T6*	#6 Str-250 kcmil	1-5/8	3-1/8	1/2	3/4	1-3/8
QGFL31B1*	2 AWG-350 kcmil	1-3/4	2-7/8	1/2	1/4	1-5/8
QGFL31B1T6*	2 AWG-350 kcmil	1-3/4	3-1/4	1/2	3/4	1-5/8
QGFL34B1	1/0 -500 kcmil	2	3-1/8	1/2	1/4	1-3/4
QGFL34B1T6	1/0 -500 kcmil	2	3-5/8	1/2	3/4	1-3/4
QGFL39B1	350 kcmil-750 kcmil	2-1/4	3-1/4	1/2	1/4	1-3/4
QGFL39B1T6	350 kcmil-750 kcmil	2-1/4	3-5/8	1/2	3/4	1-3/4
QGFL44B1	750 kcmil-1000 kcmil	2-1/4	3-3/8	1/2	1/4	2-1/8
QGFL44B1T6	750 kcmil-1000 kcmil	2-1/4	4-1/8	1/2	3/4	2-1/8
QGFL46B1	1000 kcmil-1500 kcmil	2-1/4	4	1/2	1/4	2-1/2
QGFL46B1T6	1000 kcmil-1500 kcmil	2-1/4	4-1/2	1/2	3/4	2-1/2
QGFL48B1	1500 kcmil-2000 kcmil	2-1/4	4-3/4	1/2	1/4	3

Blue highlighted items are industry standard and most frequently ordered.

TYPE FCB

TRANSFORMER TAP ADAPTERS

For Use On Copper And Aluminum

Cast in one piece from copper alloy. Transformer tap adapter designed to accommodate from 1 to 6 NEMA drilled copper or aluminum terminal taps from a single secondary transformer outlet. Tin-plated. Order mounting hardware and tap terminals separately.

Material: Copper

Notes :
- Plated versions: add the required suffix to the catalog number. -TN for regular tin plating
- Please contact factory for other sizes, combinations and availability

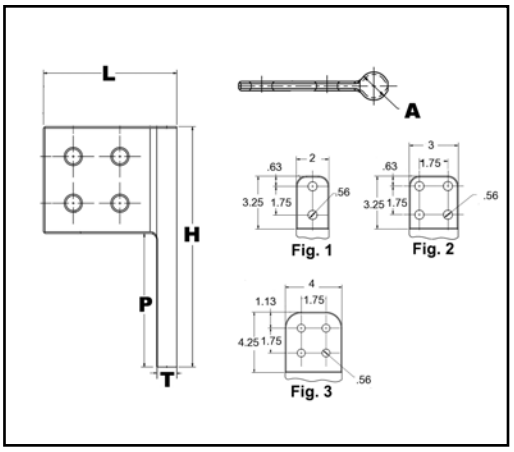

Catalog Number	A	H	P	T	L
FCB63-2NP300	1/2	5.00	3.00	0.25	3.50
FCB63-4N	1/2	5.25	2.25	0.25	3.75
FCB63-6N	1/2	5.25	2.25	0.25	5.50
FCB64-2NP300	3/4	5.00	3.00	0.25	3.75
FCB64-44NP50	3/4	9.00	5.00	0.25	5.00
FCB644G4	3/4	7.50	4.50	0.25	4.25
FCB64-4N	3/4	5.75	2.75	0.25	4.00
FCB64-6N	3/4	5.75	2.75	0.25	5.75
FCB65-4N	1	7.00	4.00	0.25	4.25

TYPE E-C-G

TAP ADAPTERS

For Use On Copper Cable

Multi-tap, range-taking cast copper alloy connector designed to take 2, 3 or 4 conductors from a single secondary transformer outlet.

Material: Copper Alloy

Notes :
- Plated versions: add the required suffix to the catalog number. -TN for regular tin plating
- Please contact factory for other sizes, combinations and availability

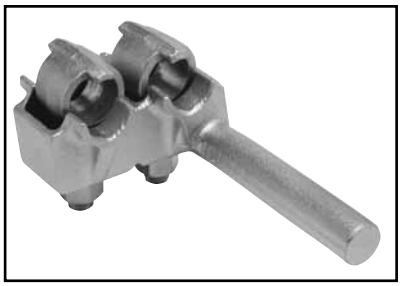

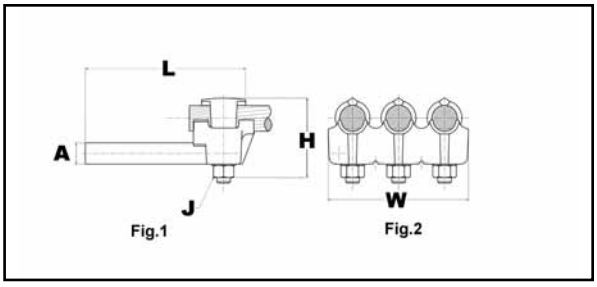

Catalog Number	Number of Conductors	Conductor Size	A Dia.	H	J	L	W
E2C34G1	2	1/0 -500 kcmil	0.78	3.88	1/2	6.25	3.50
E3C34G1	3						5.25
E4C34G1	4						6.88

Blue highlighted items are industry standard and most frequently ordered.

TYPE HFBW

BAR CLAMPS

For Use On Copper Bar

The clamp assembly eliminates the need for drilling the flat bar and may be used in either indoor and outdoor applications. The open web design provides a uniform clamping pressure while minimizing the weight of the connector.

Material: Copper Alloy

Notes :

- Please contact factory for other sizes, combinations and availability.

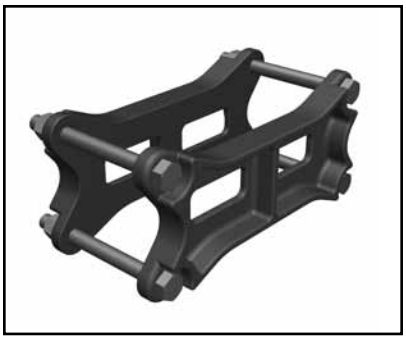

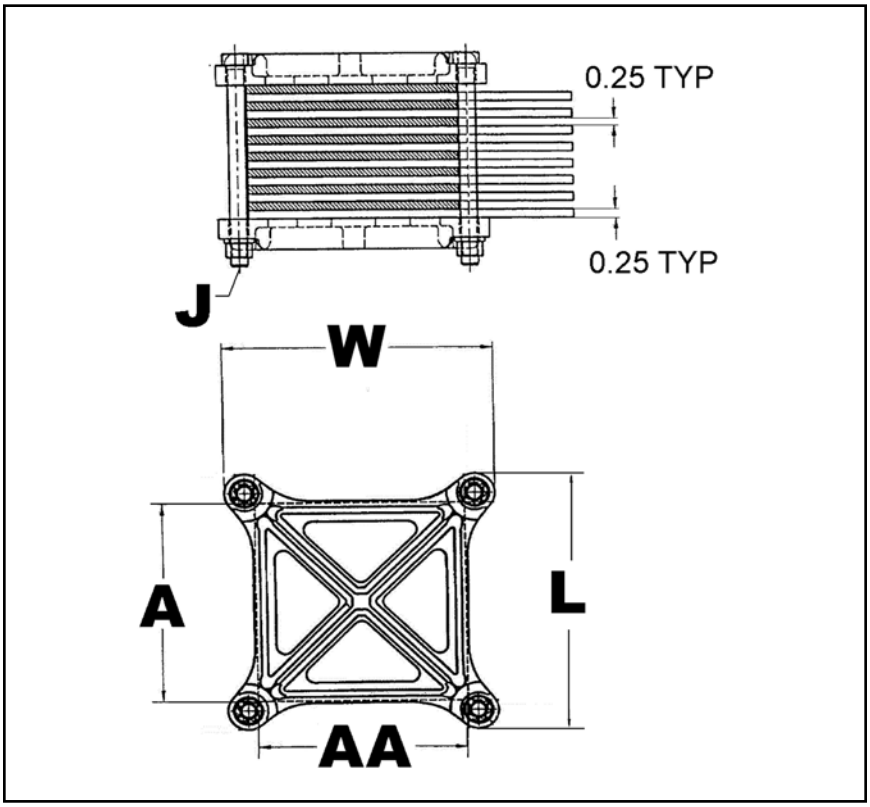

Catalog Number	A	AA	J Dia.	L	W
HFB44G30W	4.00	4.00	1/2	5.75	5.75
HFB44G31W	4.00	4.00	1/2	5.75	5.75
HFB44G32W	4.00	4.00	1/2	5.75	5.75

TYPE HFB-P1

BAR CLAMP ASSEMBLY COMPONENTS

For Use On Copper Bar

To build your own high strength clamp assembly for multiple flat bar using type HFB-P1 bar clamps and clamping hardware, the following tables have been provided. The clamp assembly eliminates the need for drilling the flat bar and may be used in either indoor and outdoor applications.

Material: Copper Alloy

Notes :
- Please contact factory for other sizes, combinations and availability

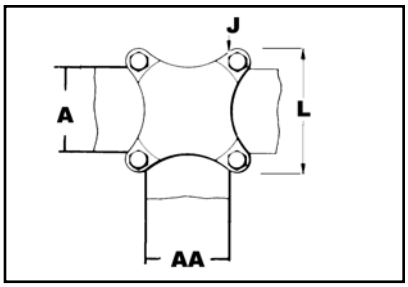

Catalog Number	A	AA	J Dia.	L
HFB22P1	2.00	2.00	3/8	4.38
HFB33P1	3.00	3.00	3/8	4.38
HFB42P1	4.00	2.00	3/8	5.75
HFB44P1	4.00	4.00	1/2	5.75
HFB52P1	5.00	2.00	1/2	6.75
HFB53P1	5.00	3.00	1/2	6.75
HFB54P1	5.00	4.00	1/2	6.75
HFB55P1	5.00	5.00	5/8	7.13
HFB62P1	6.00	2.00	1/2	7.75
HFB63P1	6.00	3.00	1/2	7.75
HFB64P1	6.00	4.00	1/2	7.75

TYPE HFB-N

BAR CLAMP TAP PAD ADAPTERS

For Use On Copper Bar

High conductivity copper, tap pad adapter provides a NEMA drilled contact pad when assembled to the HFB-P1 clamps. Tap connections can be made from copper bus bar(s) without drilling, by bolting standard mechanical or compression terminal pads directly to the pre-drilled tap pad adapter.

Material: Copper

Notes :
- Please contact factory for other sizes, combinations and availability

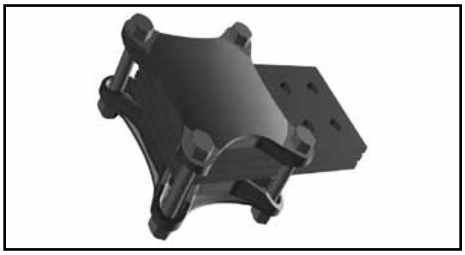

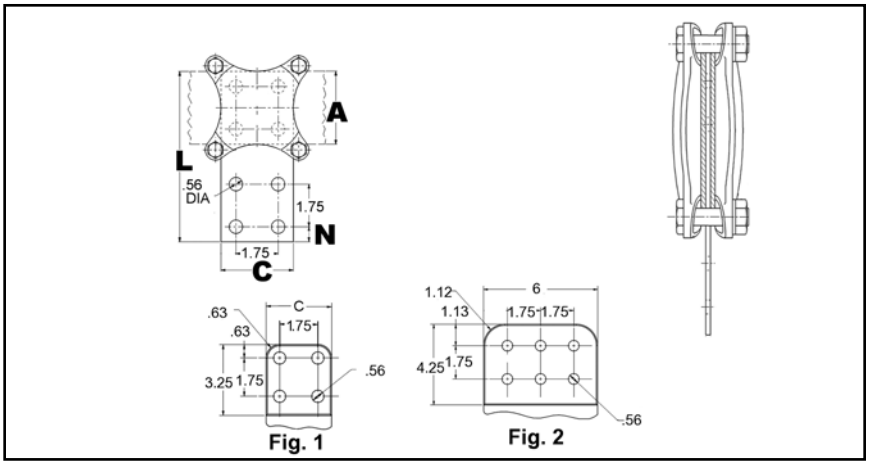

Catalog Number	A	C	L	N
HFB33-4N	3.00	3.00	7.00	0.62
HFB44-4N	4.00	4.00	9.12	1.12
HFB66-6N	6.00	6.00	11.31	1.12

Blue highlighted items are industry standard and most frequently ordered.

TYPE NNT

T-CONNECTOR

For Aluminum and Copper Tube to Tube

Aluminum alloy T-Connector for tubing run and tap. Properly proportioned to permit use on copper-aluminum conductor combinations. Captured hex head bolts permit one-wrench installation. PENETROX™ joint compound recommended on contact surfaces.

Material: Aluminum Alloy
Hardware: Aluminum Hardware

Notes :
- PENETROX™ A joint compound is recommended on contact surfaces
- Please contact factory for other sizes, combinations and availability
- One-wrench installation.

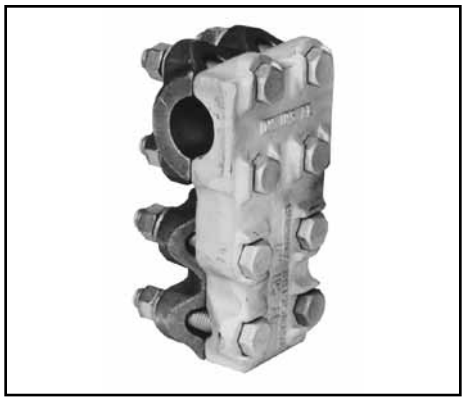

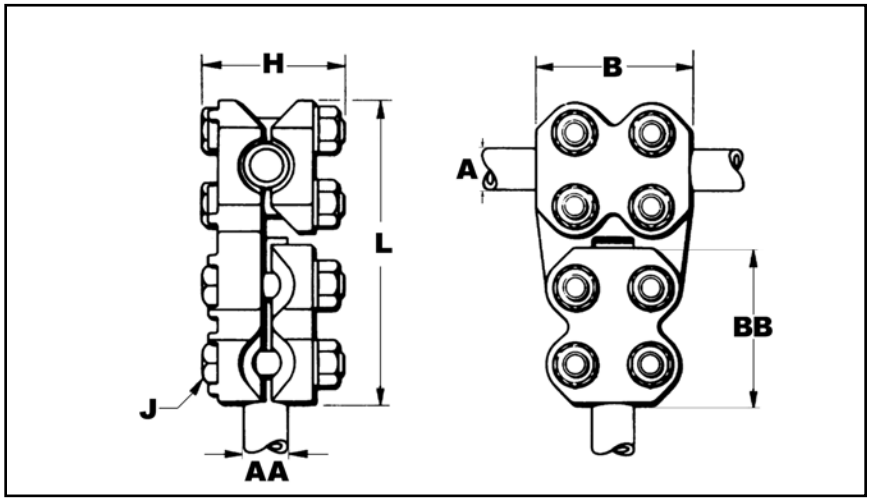

Catalog Number	A - Run tube	AA - Tap tube	B	J Dia.	BB	L	H
NNT15A15A	1 IPS	1 IPS	3.50	1/2	3.50	6.81	3.38
NNT16A16A	1 1/4 IPS	1 1/4 IPS	3.75	1/2	3.75	7.44	3.38
NNT17A17A	1 1/2 IPS	1 1/2 IPS	4.00	1/2	4.00	7.88	3.88
NNT18A18A	2 IPS	2 IPS	4.25	5/8	4.25	9.06	4.44
NNT19A19A	2 1/2 IPS	2 1/2 IPS	4.50	5/8	4.50	9.38	4.94
NNT20A20A	3 IPS	3 IPS	5.00	5/8	5.00	10.94	5.44
NNT21A20A	3 1/2 IPS	3 IPS	5.50	5/8	5.00	11.06	5.56
NNT22A22A	4 IPS	4 IPS	6.00	5/8	6.00	12.63	6.19

TYPE NNTR
T-CONNECTOR

For Use On CABLE TO CABLE

Aluminum alloy T-Connector for a range of cable run to range of cable tap. One-wrench installation.

Material: Aluminum Alloy
Hardware: Aluminum Hardware

Notes :
- PENETROX™ A joint compound is recommended on contact surfaces
- Please contact factory for other sizes, combinations and availability
- One-wrench installation.

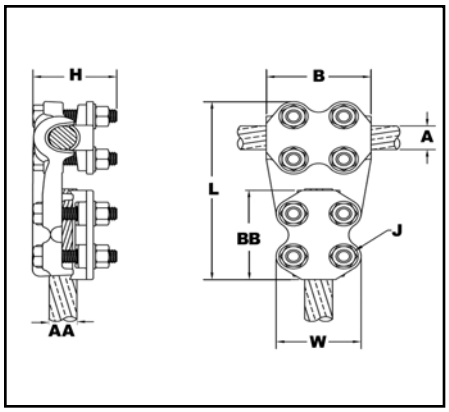

Catalog Number	A - Run Al Cable	A - Run ACSR Cable	AA - Tap Al Cable	AA - Tap ACSR Cable	B	J Dia.	BB	L	H	W
NNTR29A29A	1/0 AWG-250 kcmil	1/0 (6/1) Raven AWG-4/0 (6/1) Penquin AWG	1/0 AWG-250 kcmil	1/0 (6/1) Raven AWG-4/0 (6/1) Penquin AWG	2.75	1/2	2.75	5.56	2.56	2.50
NNTR32A25A	250 kcmil-400 kcmil	4/0 (6/1) Penquin AWG-397.5 (18/1) Chickadee kcmil	4 AWG-1/0 AWG	4 (6/1) Swan AWG-1/0 (6/1) Raven AWG	1.88	1/2	1.88	4.81	2.56	2.28
NNTR32A32A	250 kcmil-400 kcmil	4/0 (6/1) Penquin AWG-397.5 (18/1) Chickadee kcmil	250 kcmil-400 kcmil	4/0 (6/1) Penquin AWG-397.5 (18/1) Chickadee kcmil	3.00	1/2	3.00	5.94	2.56	2.63
NNTR36A29A	350 kcmil-600 kcmil	336.4 (18/1) Merlin kcmil-477.0 (18/1) Pelican kcmil	1/0 AWG-250 kcmil	1/0 (6/1) Raven AWG-4/0 (6/1) Penquin AWG	3.25	1/2	2.75	5.31	2.56	2.50
NNTR36A36A	350 kcmil-600 kcmil	336.4 (18/1) Merlin kcmil-477.0 (18/1) Pelican kcmil	350 kcmil-600 kcmil	336.4 (18/1) Merlin kcmil-477.0 (18/1) Pelican kcmil	3.25	1/2	3.25	6.31	2.56	2.75
NNTR42A32A	600 kcmil-900 kcmil	477.0 (18/1) Pelican kcmil-795 (54/7) Condor kcmil	250 kcmil-400 kcmil	4/0 (6/1) Penquin AWG-397.5 (18/1) Chickadee kcmil	3.50	1/2	3.00	6.38	3.13	2.63
NNTR42A36A	600 kcmil-900 kcmil	477.0 (18/1) Pelican kcmil-795 (54/7) Condor kcmil	350 kcmil-600 kcmil	336.4 (18/1) Merlin kcmil-477.0 (18/1) Pelican kcmil	3.50	1/2	3.25	6.63	3.13	2.75
NNTR42A42A	600 kcmil-900 kcmil	477.0 (18/1) Pelican kcmil-795 (54/7) Condor kcmil	600 kcmil-900 kcmil	477.0 (18/1) Pelican kcmil-795 (54/7) Condor kcmil	3.50	1/2	3.50	6.88	3.13	3.00
NNTR45A45A	900 kcmil-1250 kcmil	715.5 (54/7) Crow kcmil-1113 (54/19) Finch kcmil	900 kcmil-1250 kcmil	715.5 (54/7) Crow kcmil-1113 (54/19) Finch kcmil	3.75	1/2	3.75	7.31	3.25	3.19
NNTR46A42A	1250 kcmil-1600 kcmil	1113 (54/19) Finch kcmil-1431 (54/19) Plover kcmil	600 kcmil-900 kcmil	477.0 (18/1) Pelican kcmil-795 (54/7) Condor kcmil	3.75	1/2	3.50	7.25	3.44	3.00
NNTR46A46A	1250 kcmil-1600 kcmil	1113 (54/19) Finch kcmil-1431 (54/19) Plover kcmil	1250 kcmil-1600 kcmil	1113 (54/19) Finch kcmil-1431 (54/19) Plover kcmil	4.38	5/8	4.38	8.31	3.69	3.75
NNTR48A48A	1500 kcmil-2000 kcmil	1272 (54/19) Pheasant kcmil-1780 (54/19) kcmil	1500 kcmil-2000 kcmil	1272 (54/19) Pheasant kcmil-1780 (54/19) kcmil	4.50	5/8	4.50	8.63	3.81	3.88

Blue highlighted items are industry standard and most frequently ordered.

TYPE NNTR
T-CONNECTOR

For Use On TUBE TO CABLE

Aluminum alloy T-Connector for tube run, range of cable tap. Properly proportioned to permit use on copper-aluminum combinations. One-wrench installation. PENETROX™ joint compound recommended on contact surfaces.

Material: Aluminum Alloy
Hardware: Aluminum Hardware

Notes :
- PENETROX™ A joint compound is recommended on contact surfaces
- Please contact factory for other sizes, combinations and availability
- One-wrench installation.

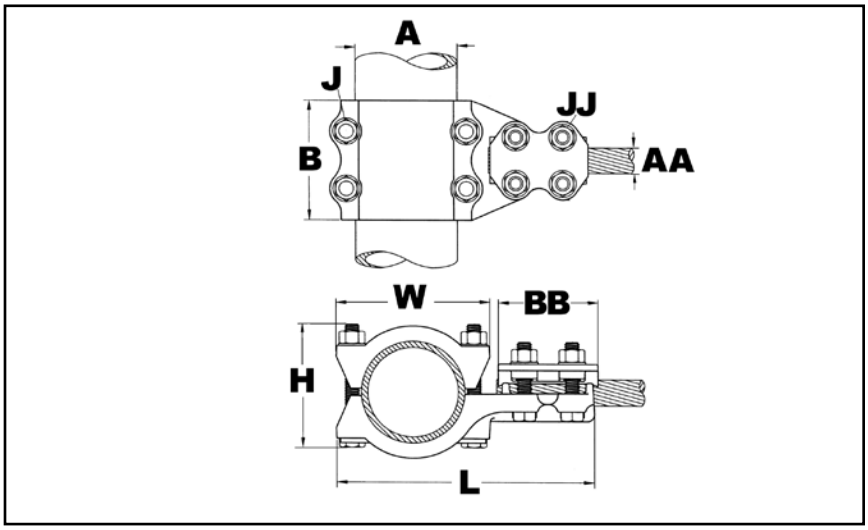

Catalog Number	A - Run Al Pipe	AA - Tap Al Cable	AA - Tap ACSR Cable	B	J Dia.	BB	L	H	JJ Dia.	W
NNTR14A29A	3/4 IPS	1/0 AWG-250 kcmil	1/0 (6/1) Raven AWG-4/0 (6/1) Penquin AWG	3.25	1/2	2.75	5.81	3.06	0.50	2.50
NNTR15A36A	1 IPS	350 kcmil-600 kcmil	336.4 (18/1) Merlin kcmil-477.0 (18/1) Pelican kcmil	3.50	1/2	3.25	6.56	3.31	0.50	2.75
NNTR15A42A	1 IPS	600 kcmil-900 kcmil	477.0 (18/1) Pelican kcmil-795 (54/7) Condor kcmil	3.50	1/2	3.50	6.81	3.31	0.50	3.00
NNTR16A29A	1 1/4 IPS	1/0 AWG-250 kcmil	1/0 (6/1) Raven AWG-4/0 (6/1) Penquin AWG	3.75	1/2	2.75	6.44	3.31	0.50	2.50
NNTR16A32A	1 1/4 IPS	250 kcmil-400 kcmil	4/0 (6/1) Penquin AWG-397.5 (18/1) Chickadee kcmil	3.75	1/2	3.12	6.69	3.31	0.50	2.63
NNTR16A42A	1 1/4 IPS	600 kcmil-900 kcmil	477.0 (18/1) Pelican kcmil-795 (54/7) Condor kcmil	3.75	1/2	3.50	7.19	3.31	0.50	3.00
NNTR17A29A	1 1/2 IPS	1/0 AWG-250 kcmil	1/0 (6/1) Raven AWG-4/0 (6/1) Penquin AWG	4.00	1/2	2.75	6.69	3.81	0.50	2.50
NNTR18A29A	2 IPS			4.00	1/2	2.75	7.56	4.44	0.50	2.50
NNTR19A42A	2 1/2 IPS	600 kcmil-900 kcmil	477.0 (18/1) Pelican kcmil-795 (54/7) Condor kcmil	4.00	5/8	3.50	8.88	5.00	0.63	3.00
NNTR20A32A	3 IPS	250 kcmil-400 kcmil	4/0 (6/1) Penquin AWG-397.5 (18/1) Chickadee kcmil	4.00	1/2	3.00	9.00	5.44	0.50	2.63
NNTR22A46A	4 IPS	1250 kcmil-1600 kcmil	1113 (54/19) Finch kcmil-1431 (54/19) Plover kcmil	6.00	5/8	4.38	11.25	6.19	0.63	3.75

Blue highlighted items are industry standard and most frequently ordered.

TYPE NS-A

COUPLER

For Use On Aluminum Tube To Tube

Aluminum alloy coupler for joining equal sizes of tube end to end. Properly proportioned to permit use on aluminum-copper conductor combinations. One-wrench installation. PENETROX™ joint compound recommended on contact surfaces.

Material: Aluminum Alloy
Hardware: Aluminum Hardware

Notes :
- PENETROX™ A joint compound is recommended on contact surfaces
- Please contact factory for other sizes, combinations and availability

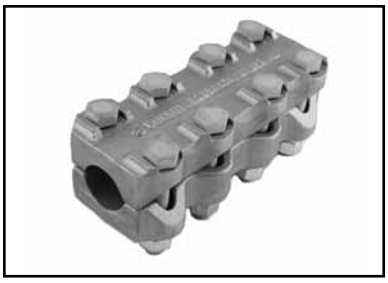

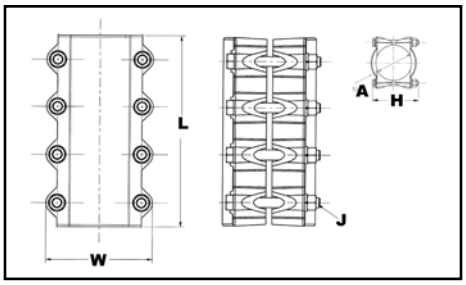

Catalog Number	A - tube	J Dia.	L	H	W
NS14A14A	3/4 IPS	1/2	6.75	2.06	2.80
NS15A15A	1 IPS		7.25	2.18	3.06
NS16A16A	1 1/4 IPS		7.75	3.50	3.41
NS17A17A	1 1/2 IPS		8.25	4.00	3.64
NS18A18A	2 IPS	5/8	8.75	4.62	4.50
NS19A19A	2 1/2 IPS		9.31	4.26	5.00
NS20A20A	3 IPS		10.25	5.62	5.63
NS21A21A	3 1/2 IPS		8.00	5.25	6.14
NS22A22A	4 IPS		12.00	5.94	6.62
NS23A23A	4 1/2 IPS		13.25	6.38	7.14
NS24A24A	5 IPS		14.38	6.94	7.70
NS86A86A	6 IPS		16.25	8.04	8.76

TYPE NA-A

TERMINAL

For Use On Tube To Flat

Aluminum alloy terminal for joining copper or aluminum tube to copper or aluminum pad.

Material: Aluminum Alloy
Hardware: Aluminum Hardware

Notes :
- Properly proportioned to minimize conductor corrosion due to galvanic action. When properly used, this item does not require use of bimetallic plates. Please ask BURNDY® Technical Support for recommendations
- PENETROX™ A joint compound is recommended on contact surfaces
- Please contact factory for other sizes, combinations and availability
- One wrench installation

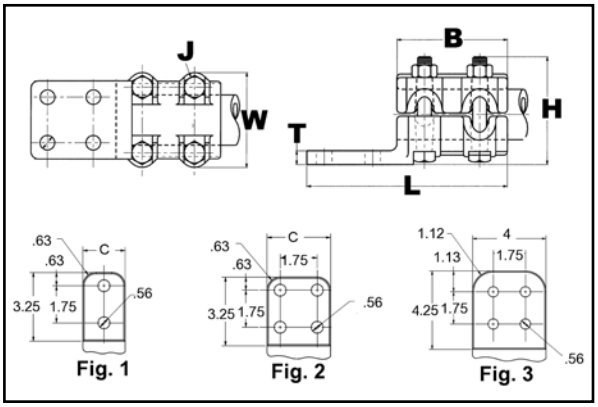

Catalog Number	Al tube	B	C	J Dia.	L	H	T	W
NA15A-2N	1 IPS	3.50	1.88	1/2	6.75	3.38	0.38	3.06
NA15A-4N		3.50	3.00	1/2	6.75	3.38	0.38	3.06
NA16A-2N	1 1/4 IPS	3.75	2.25	1/2	7.00	3.38	0.44	3.40
NA17A-2N	1 1/2 IPS	4.00	2.50	1/2	7.50	3.88	0.50	3.64
NA17A-4N		4.00	3.00	1/2	7.50	3.88	0.50	3.64
NA18A-2N	2 IPS	4.25	2.75	5/8	7.50	4.47	0.50	4.50
NA18A-4N		4.25	3.12	5/8	7.50	4.47	0.50	4.50
NA19A-4N	2 1/2 IPS	4.50	3.75	5/8	7.75	4.97	0.69	5.00
NA20A-4N	3 IPS	5.00	4.38	5/8	8.31	5.47	0.69	5.62
NA22A-4N	4 IPS	6.00	5.25	5/8	9.31	6.22	0.81	6.62

Blue highlighted items are industry standard and most frequently ordered.

TYPE XA-A

EXPANSION TERMINAL

For Use On Expansion Tube To Flat

Aluminum alloy expansion connector for joining tube to copper or aluminum bar or equipment pads. Flexible aluminum straps allow for longitudinal or lateral movement and carries full current load of the joint. PENETROX™ joint compound recommended on contact surfaces. Pad contact surface is on centerline of conductor.

Material: Aluminum Alloy
Hardware: Aluminum Hardware

Notes :
- PENETROX™ A joint compound is recommended on contact surfaces
- One side of pad finished on centerline of tubing. For finished pads on both sides add suffix "-Q" to catalog number.

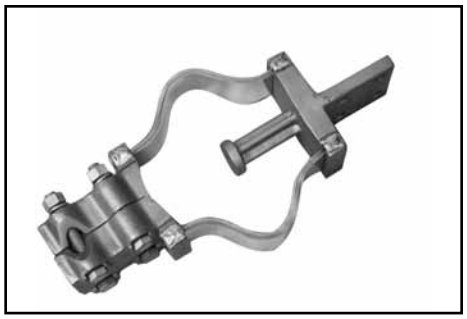

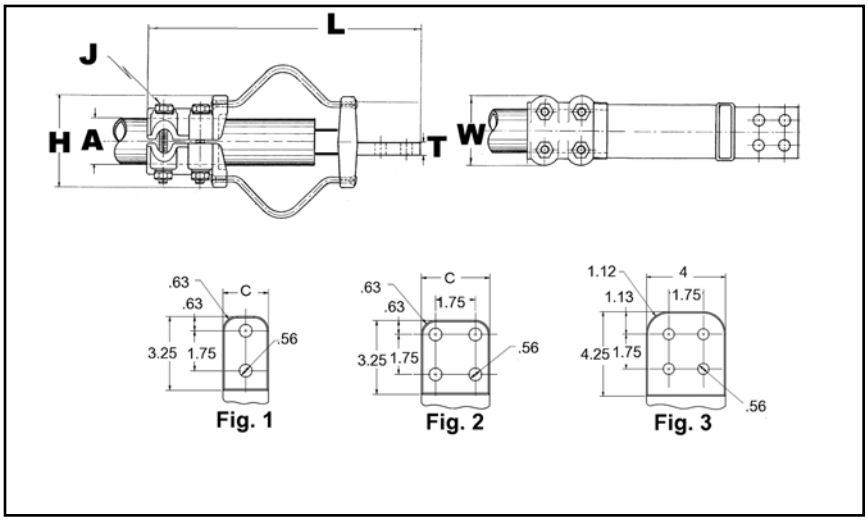

Catalog Number *	Fig. #	Al tube Schd 40	Al tube Schd 80	C	J Dia.	L	H	T	W
XA15A-4N	2	1 IPS	N/A	3.00	1/2	13.19	3.70	0.38	3.06
XA16A-4N	2	1 1/4 IPS		3.00	1/2	13.62	4.00	0.44	3.41
XA18A-4N	2	2 IPS		3.12	5/8	15.50	5.26	0.50	4.50
XA19A-4N	2	2 1/2 IPS		3.75	5/8	16.94	5.72	0.69	5.00
XA20A-4N	2	3 IPS		4.38	5/8	18.52	6.80	0.69	5.62
XA21A-4N	2	3 1/2 IPS		4.75	5/8	20.00	7.60	0.81	6.12
XA22A-4N	2	4 IPS		5.25	5/8	21.00	8.16	0.81	6.62
XA24A-4N	2	5 IPS		6.50	5/8	24.15	9.74	0.81	7.69

* Conforms to 4-hole NEMA mounting standards.

Blue highlighted items are industry standard and most frequently ordered.

Canada: 1-800-387-6487 www.burndy.com US: 1-800-346-4175

TYPE NAR

TERMINAL

For Use On Cable To Pad

Aluminum alloy bolted type terminal for joining aluminum cable to copper or aluminum pads. Drilling in pad conforms to NEMA Standards. PENETROX™ joint compound recommended on contact surfaces.

Material: Aluminum Alloy
Hardware: Aluminum Hardware

Notes :

- Properly proportioned to minimize conductor corrosion due to galvanic action. When properly used, this item does not require use of bimetallic plates. Please ask BURNDY® Technical Support for recommendations.
- PENETROX™ A joint compound is recommended on contact surfaces.
- Please contact factory for other sizes, combinations and availability.
- One-wrench installation.

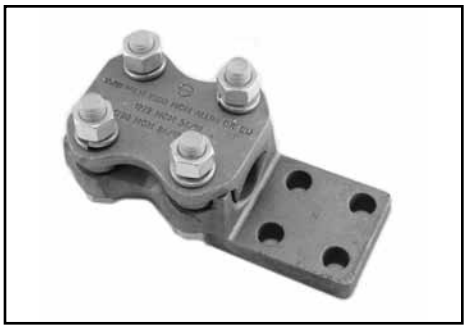

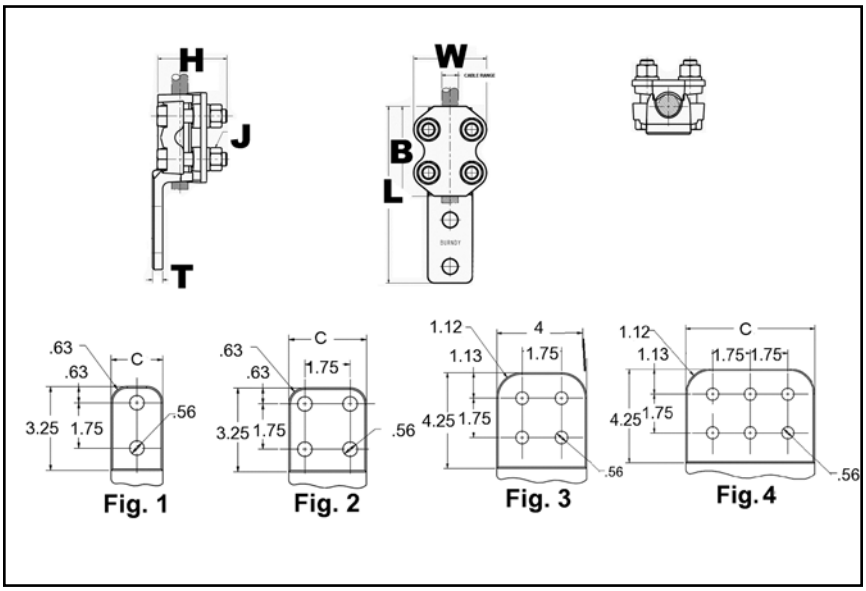

Catalog Number	Fig. #	Aluminum Stranded	Aluminum ACSR	B	J Dia.	L	H	C	T	W
NAR25A2N	1	4 AWG-1/0 AWG	4 (6/1) Swan AWG-1/0 (6/1) Raven AWG	2.00	1/2	5.10	2.72	1.25	0.31	2.28
NAR29A2N	2	1/0 AWG-250 kcmil	1/0 (6/1) Raven AWG-4/0 (6/1) Penquin AWG	2.75	1/2	6.06	2.75	1.38	0.31	2.50
NAR29A4N	2			2.88	1/2	6.06	2.75	3.00	0.31	3.00
NAR32A2N	2	250 kcmil-400 kcmil	4/0 (6/1) Penquin AWG-397.5 (30/7) Larkspur kcmil	3.00	1/2	6.31	2.88	1.63	0.38	2.63
NAR32A4N	2		4/0 (6/1) Penquin AWG-397.5 (30/7) Larkspur kcmil	3.00	1/2	6.31	2.88	3.00	0.38	3.00
NAR36A2N	2	350 kcmil-600 kcmil	336.4 (30/7) Oriole kcmil-477. (30/7) Hen kcmil	3.25	1/2	6.63	2.81	1.69	0.38	2.75
NAR36A4N	2		336.4 (30/7) Oriole kcmil-477. (30/7) Hen kcmil	3.25	1/2	6.63	2.81	3.00	0.38	3.00
NAR42A2N	1	600 kcmil-900 kcmil	477. (30/7) Hen kcmil-795 (30/19) Mallard kcmil	3.50	1/2	6.81	3.31	2.00	0.50	3.00
NAR42A4N	2			3.50	1/2	6.81	3.31	3.00	0.50	3.00
NAR45A2N	1	900 kcmil-1250 kcmil	715.5 (30/19) Redwing kcmil-1113 (54/19) Finch kcmil	2.63	1/2	7.12	3.31	2.63	0.50	3.20
NAR45A4N	2			3.75	1/2	7.12	3.31	3.00	0.50	3.20
NAR46A2N	1	1250 kcmil-1600 kcmil	1113 (54/19) Finch kcmil-1431 (54/19) Plover kcmil	4.38	5/8	7.69	3.69	2.75	0.56	3.75
NAR46A4N	2			4.38	5/8	7.69	3.69	3.00	0.56	3.75
NAR48A2N	1	1500 kcmil-2000 kcmil	1272 (54/19) Pheasant kcmil-1780 (54/19) kcmil	4.50	5/8	7.88	3.94	2.75	0.69	3.88
NAR48A4N	2			4.50	5/8	7.88	3.94	3.00	0.69	3.88

Blue highlighted items are industry standard and most frequently ordered.

TYPE NBC-A

BOLTED CONNECTOR

For Use On Pipe To Centerline Tap Pad

Aluminum alloy bolted type terminal for joining aluminum tube to copper or aluminum pads. Drilling in pad conforms to NEMA Standards. PENETROX™ joint compound recommended on contact surfaces.

Material: Aluminum Alloy
Hardware: Aluminum Hardware

Notes :

- Properly proportioned to minimize conductor corrosion due to galvanic action. When properly used, this item does not require use of bimetallic plates. Please ask BURNDY® Technical Support for recommendations
- PENETROX™ A joint compound is recommended on contact surfaces
- Please contact factory for other sizes, combinations and availability
- One-wrench installation.

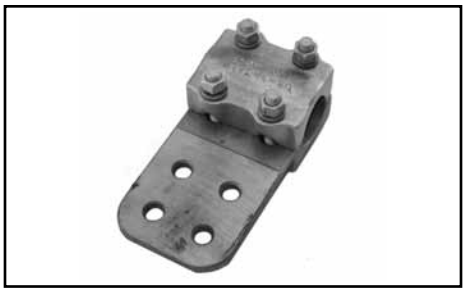

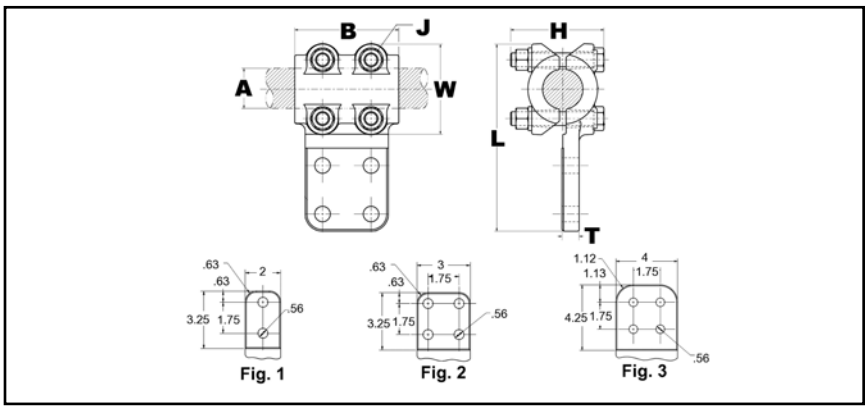

Catalog Number	Fig. #	Al tube	B	J Dia.	L	H	T
NBC14A2N	1	3/4 IPS	3.25	1/2	6.56	3.50	3/8
NBC15A-2N	1	1 IPS	3.50	1/2	6.81	3.00	3/8
NBC15A34N	2		3.50	1/2	6.81	3.00	3/8
NBC16A2N	1	1 1/4 IPS	3.75	1/2	7.15	3.25	3/8
NBC16A34N	2		3.75	1/2	7.15	3.25	3/8
NBC16A44N	3		3.75	1/2	8.15	3.25	3/8
NBC17A2N	1	1 1/2 IPS	4.00	1/2	7.39	3.50	3/8
NBC17A34N	2		4.00	1/2	7.39	3.50	3/8
NBC17A44N	3		4.00	1/2	8.39	3.50	3/8
NBC18A2N	1	2 IPS	4.25	5/8	8.25	4.00	3/8
NBC18A34N	2		4.25	5/8	8.25	4.00	3/8
NBC18A-44N	3		4.25	5/8	9.25	4.00	3/8
NBC19A34N	2	2 1/2 IPS	4.50	5/8	8.75	4.50	1/2
NBC19A44N	3		4.50	5/8	9.75	4.50	1/2
NBC20A2N	1	3 IPS	5.00	5/8	9.37	4.50	1/2
NBC20A34N	2		5.00	5/8	9.37	4.50	1/2
NBC20A-44N	3		5.00	5/8	10.37	4.50	1/2
NBC21A44N	3	3 1/2 IPS	5.50	5/8	10.89	5.00	5/8
NBC22A2N	1	4 IPS	6.00	5/8	10.38	5.50	5/8
NBC22A34N	2		6.00	5/8	10.37	5.50	5/8
NBC22A44N	3		6.00	5/8	11.37	5.50	5/8
NBC24A2N	1	5 IPS	7.00	5/8	12.45	6.00	5/8
NBC24A34N	2		7.00	5/8	12.45	6.00	5/8
NBC24A44N	3		7.00	5/8	13.45	6.00	5/8
NBC86A44N	3	6 IPS	8.00	5/8	13.51	7.25	3/4

Blue highlighted items are industry standard and most frequently ordered.

TYPE UHG

BUS SUPPORT

For Use On Fixed Or Rigid Pipe To Base

Aluminum alloy bus support for mounting tube on post or pedestal insulators. Properly proportioned to minimize conductor corrosion due to galvanic action. Caps are reversible for FIX or RIGID fit. One-wrench installation.Supplied with hardware for mounting to cap of insulator.

Material: Aluminum Alloy
Hardware: Aluminum Hardware

Notes :
- PENETROX™ A joint compound is recommended on contact surfaces.
- Specify base mounting hardware, if required, by adding suffix -B to catalog number.
- For static clips add "-CH" to Catalog Number.

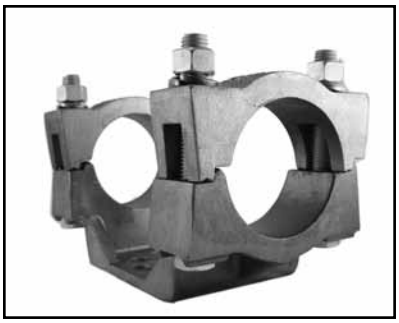

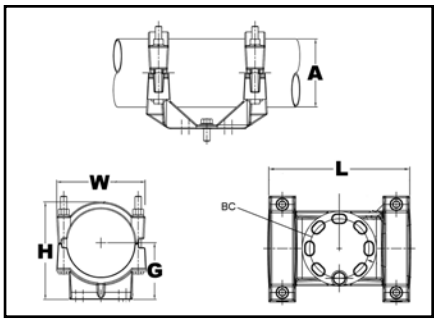

Catalog Number	A	BC	G	L	H	W
UHG13A3CH	1/2 IPS	3.00	1.75	7.44	3.09	2.66
UHG14A-3	3/4 IPS		2.00	7.44	3.50	2.94
UHG14A3CH	3/4 IPS			7.44	3.50	2.94
UHG15A-3	1 IPS			7.44	3.88	3.06
UHG15A3CH	1 IPS			7.44	3.88	3.19
UHG15A-5	1 IPS	5.00	2.25	9.82	3.82	3.19
UHG15A5CH	1 IPS			9.82	3.82	3.19
UHG16A3CH	1 1/4 IPS	3.00		7.68	3.79	3.50
UHG16A5CH	1 1/4 IPS	5.00	2.38	10.06	3.94	3.50
UHG17A-3	1 1/2 IPS	3.00	2.50	7.68	4.06	3.66
UHG17A3CH	1 1/2 IPS			7.68	4.06	3.66
UHG17A-5	1 1/2 IPS	5.00		10.06	4.06	3.66
UHG17A5CH	1 1/2 IPS			10.06	4.06	3.66
UHG18A-3	2 IPS	3.00	2.75	7.68	5.25	4.12
UHG18A3CH	2 IPS			7.68	5.25	4.12
UHG18A-5	2 IPS	5.00		10.06	4.61	4.12
UHG18A5CH	2 IPS			10.06	4.61	4.12
UHG19A-3	2 1/2 IPS	3.00	3.12	7.68	5.23	4.62
UHG19A3CH	2 1/2 IPS			7.68	5.23	4.62
UHG19A5CH	2 1/2 IPS	5.00		10.56	5.23	4.62
UHG20A3CH	3 IPS	3.00	3.62	9.25	6.09	5.62
UHG20A-5	3 IPS	5.00		10.56	6.09	5.62
UHG20A5CH	3 IPS			10.56	6.09	5.62
UHG20A7CH	3 IPS	7.00		12.80	8.46	8.46
UHG21A-3	3 1/2 IPS	3.00	4.00	8.18	6.74	6.16
UHG21A3CH	3 1/2 IPS			8.18	6.74	6.16
UHG21A5CH	3 1/2 IPS	5.00		10.56	6.74	6.16
UHG22A3CH	4 IPS	3.00	4.50	8.18	7.50	6.62
UHG22A-5	4 IPS	5.00		11.34	7.50	6.62
UHG22A5CH	4 IPS			11.34	7.50	6.62
UHG24A-3	5 IPS	3.00	5.25	8.68	8.86	7.70
UHG24A3CH	5 IPS			8.68	8.86	7.70
UHG24A-5	5 IPS	5.00		11.56	8.86	7.70
UHG24A5CH	5 IPS			11.56	8.86	7.70
UHG83A5	8 IPS		7.16	11.56	11.84	10.12
UHG86A5CH	6 IPS		5.56	11.56	9.94	8.75

Blue highlighted items are industry standard and most frequently ordered.

TYPE UHKR-A

BUS SUPPORT

For Use On Cable Or Tube To Base

Aluminum alloy bus support for mounting a wide range of cable or tube on post or pedestal type insulators. Supplied with hardware for mounting to cap of insulator.

Material: Aluminum Alloy
Hardware: Aluminum Hardware

Notes :
- PENETROX™ A joint compound is recommended on contact surfaces.
- Specify base mounting hardware, if required, by adding suffix -B to catalog number.
- Please contact factory for other sizes, combinations and availability.

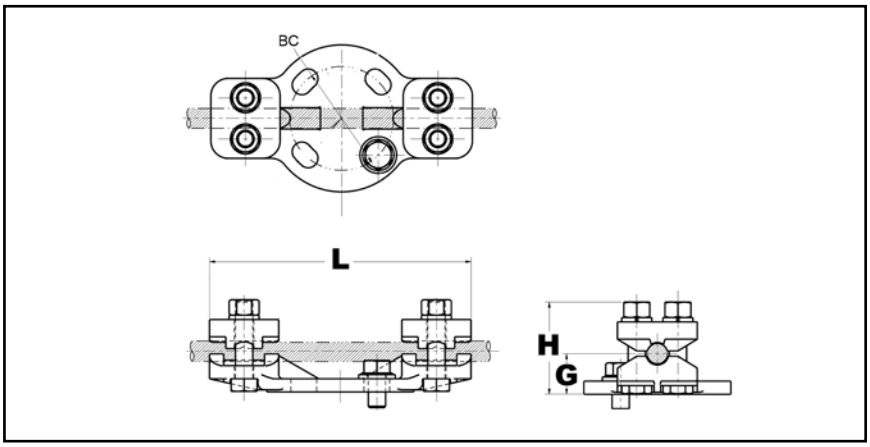

Catalog Number	Tube Size	Al Cable	ACSR Cable	BC	G *	L	H
UHKR11A3	1/4 IPS	4 AWG-4/0 AWG	6 (6/1) Turkey AWG-4/0 (6/1) Penquin AWG	3.00	1.16	7.56	2.63
UHKR11A5	1/4 IPS			5.00	1.16	8.50	2.63
UHKR13A3	3/8 IPS -1/2 IPS	250 kcmil-550 kcmil	266.8 (26/7) Owl kcmil-477. (30/7) Hen kcmil	3.00	1.32	7.56	3.88
UHKR13A5	3/8 IPS -1/2 IPS			5.00	1.32	8.88	2.88
UHKR14A3	3/4 IPS	600 kcmil-1113 kcmil	556.5 (26/7) Dove kcmil-1033.5 (54/7) Curlew kcmil	3.00	1.72	7.56	3.56
UHKR14A5	3/4 IPS			5.00	1.53	9.06	3.38
UHKR16A3	1 IPS -1 1/4 IPS	1000 kcmil-2000 kcmil	1113 (54/19) Finch kcmil-1780 (84/19) Chukar kcmil	3.00	1.97	7.56	4.06
UHKR16A5	1 IPS -1 1/4 IPS			5.00	1.80	9.25	3.88
UHKR17A3	1 1/4 IPS -1 1/2 IPS	2000 kcmil-2500 kcmil	1780 (84/19) Chukar kcmil-2156 (84/19) Bluebird kcmil	3.00	2.50	8.02	4.62
UHKR17A5	1 1/4 IPS -1 1/2 IPS			5.00	2.50	9.31	4.62

* With maximum conductor in place.

TYPE LB-A

END CAP

For Use On Pipe End Cap

Aluminum alloy end cap for aluminum tube. Driven into place for a secure fit. Seals out moisture, reduces electrostatic loss and eliminates hazards created by nesting birds.

Material: Aluminum Alloy
Hardware: Aluminum Hardware

Notes :
- Installation instructions available upon request.
- Please contact factory for other sizes, combinations and availability.

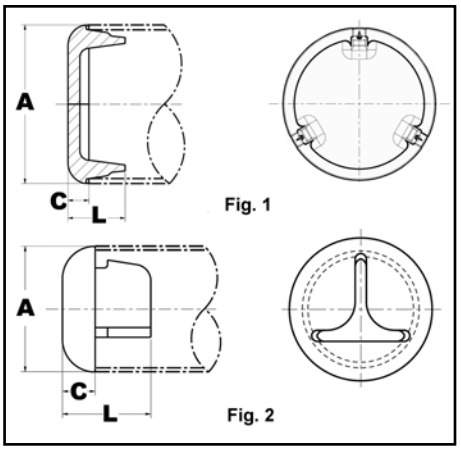

Catalog Number	Al tube Sch 40	Al tube Sch 80	C	L
LB13A	1/2 IPS	N/A	0.38	1.25
LB14A	3/4 IPS		0.50	1.37
LB15A	1 IPS			1.35
LB16A	1 1/4 IPS			1.35
LB17A	1 1/2 IPS			1.35
LB18A	2 IPS		0.88	2.16
LB19A	2 1/2 IPS			2.24
LB20A	3 IPS			2.29
LB21A	3 1/2 IPS			2.33
LB22A	4 IPS			2.22
LB23A	4 1/2 IPS			2.28
LB24A	5 IPS			2.45
LB83A	8 OD		0.75	2.28
LB86A	6 IPS		0.88	2.57
LB88A	8 IPS		0.75	2.28
LB53A	N/A	1/2 IPS	0.38	1.25
LB54A	N/A	3/4 IPS	0.50	1.37
LB55A	N/A	1 IPS		1.35
LB56A	N/A	1 1/4 IPS		1.35
LB57A	N/A	1 1/2 IPS		1.35
LB58A	N/A	2 IPS	0.88	2.16
LB59A	N/A	2 1/2 IPS		2.24
LB90A	N/A	3 IPS	0.88	2.29
LB91A	N/A	3 1/2 IPS		2.33
LB92A	N/A	4 IPS		2.22
LB94A	N/A	5 IPS		2.45
LB96A	N/A	6 IPS		2.57

TYPE WAS-A

WELDMENT TERMINAL CONNECTOR

For Use On Tube To Pad

Aluminum alloy weld type terminal for joining aluminum tube to copper or aluminum pads. Drilling in pad conforms to NEMA standards. PENETROX™ joint compound recommended on pad contact surfaces.

Material: Aluminum Alloy

Notes :
- Welding to be done by customer
- Before welding scratch brush connector and conductor contact surface dry, then apply an oxide inhibitor.
- Tongue finished on one side only. For tongue finished on both sides, add suffix "-Q" to catalog number.

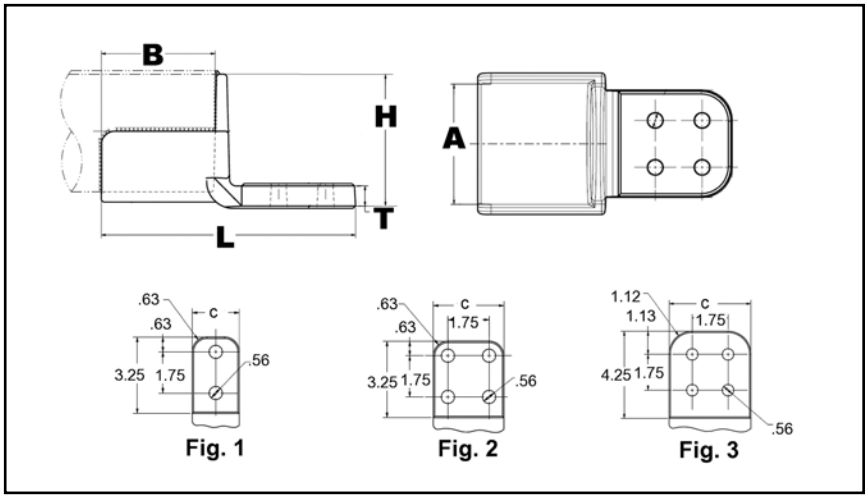

Catalog Number	Fig. #	Al Pipe	B	C	L	H	T
WAS14A-2N	1	3/4 IPS	2.50	2.00	6.50	1.34	19/50
WAS15A-2N	1	1 IPS	2.75	2.00	6.75	1.80	19/50
WAS15A-34N	2		2.75	3.00	6.75	1.80	19/50
WAS16A-2N	1	1 1/4 IPS	3.00	2.00	7.00	2.15	19/50
WAS16A34N	2		3.00	3.00	7.00	2.15	19/50
WAS17A-2N	1	1 1/2 IPS	3.25	2.00	7.25	2.38	11/25
WAS17A-34N	2		3.25	3.00	7.25	2.38	19/50
WAS18A-2N	1	2 IPS	3.50	2.00	7.50	2.84	11/25
WAS18A-34N	2		3.50	3.00	8.62	2.84	19/50
WAS18A44N	3		3.63	4.00	8.62	2.84	1/2
WAS19A-2N	1	2 1/2 IPS	3.63	2.00	7.87	3.32	14/25
WAS19A-34N	2		3.63	3.00	8.87	3.32	1/2
WAS19A-44N	3		3.63	4.00	8.87	3.32	1/2
WAS20A-2N	1	3 IPS	3.67	2.00	8.25	3.98	5/8
WAS20A-34N	2		3.75	3.00	8.25	3.98	31/50
WAS20A-44N	3		3.75	4.00	9.25	3.98	5/8
WAS21A34N	2	3 1/2 IPS	4.25	3.00	8.38	4.51	31/50
WAS22A34N	2	4 IPS	4.25	3.00	8.38	5.01	3/4
WAS22A-44N	3		4.25	4.00	9.38	5.01	3/4

Blue highlighted items are industry standard and most frequently ordered.

TYPE WASC-A-N

CENTREFORMED WELDEMENT TERMINAL

For Use On Tube To Pad

Aluminum alloy weldment terminal. Type WASC-A-N has one contact surface on the center line of the tube. Holes are NEMA spaced for terminating aluminum or copper mating pads. PENETROX™ joint compound recommended for use on contact surfaces.

Material: Aluminum Alloy

Notes :
- Welding to be done by customer
- Before welding scratch brush connector and conductor contact surface dry, then apply an oxide inhibitor.
- Tongue finished on one side only. For tongue finished on both sides, add suffix "-Q" to catalog number.

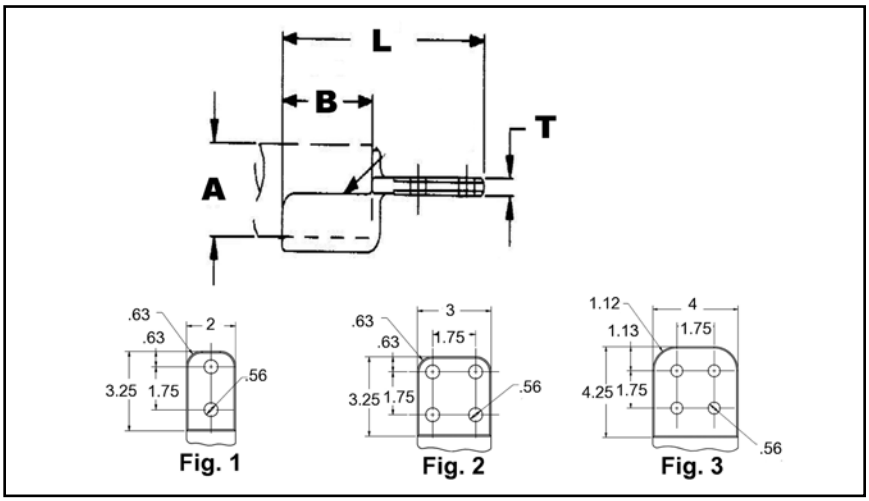

Catalog Number	Fig. #	A-Al Pipe	B	L	H	T	W
WASC15A2N	1	1 IPS	2.75	6.69	1.46	19/50	2.00
WASC16A34N	2	1 1/4 IPS	3.00	7.00	1.86	19/50	3.00
WASC17A2N	1	1 1/2 IPS	3.25	7.31	2.15	7/16	2.54
WASC17A34N	2		3.25	7.31	2.15	11/25	3.00
WASC18A2N	1	2 IPS	3.50	7.56	2.62	1/2	3.03
WASC18A34N	2		3.50	7.56	2.62	1/2	3.03
WASC19A34N	2	2 1/2 IPS	3.75	7.88	3.17	14/25	3.67
WASC19A44N	3		3.75	8.88	3.17	14/25	4.00
WASC20A2N	1	3 IPS	4.00	8.13	3.79	31/50	4.29
WASC20A34N	2		4.00	8.13	3.79	31/50	4.29
WASC20A44N	3		4.00	9.13	3.79	31/50	4.29
WASC21A34N	2	3 1/2 IPS	4.25	8.38	4.28	31/50	4.79
WASC21A44N	3		4.25	9.38	4.28	31/50	4.79
WASC22A34N	2	4 IPS	4.25	8.38	4.78	3/4	5.29
WASC22A44N	3		4.25	9.38	4.78	3/4	5.29
WASC24A44N	3	5 IPS	4.25	9.50	5.95	3/4	6.59
WASC24A66N	—		4.25	9.50	5.95	3/4	6.59

Blue highlighted items are industry standard and most frequently ordered.

TYPE WG

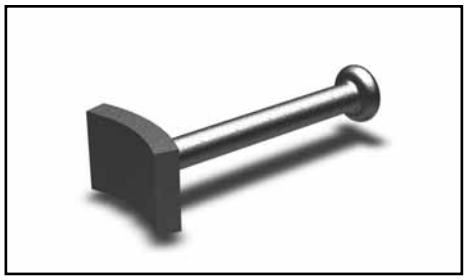

GROUND STUD

For Use On Stud To Tube

Range-taking weldment stud for grounding aluminum tube.

Material: Aluminum Alloy

Notes :
- Welding to be done by customer
- Before welding scratch brush connector and conductor contact surface dry, then apply an oxide inhibitor.
- Please contact factory for availability.

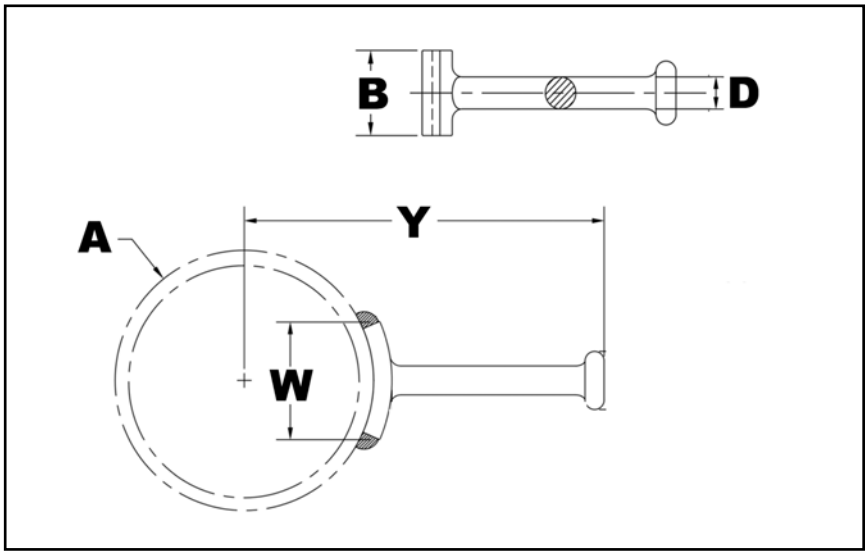

Catalog Number	Al Pipe	B	Y	D	W
WG19A	1 IPS -2 1/2 IPS	3	8.19	0.75	1.32
WG86A	3 IPS -6 IPS	2	10.31	0.75	3.06

TABLE OF CONTENTS

Introduction	M-4
BURNDY® DESIGN CRITERIA	M-4
Cable Connectors	M-4
Tubular Bus Connectors	M-4
Controlling Corona	M-4
Nomogram for Determining Equivalent	M-5
Controlling Corona (continued)	M-6
Gradient Calibrator	M-6
Formula for Determining Voltage Gradient	M-7
Nomogram for Finding the Average Conductor-Surface Voltage-Gradient	M-8
Radio Interference Voltage	M-9
Effect of Conductor Size on Testing	M-9
Contamination	M-9
Conclusion	M-9

TABLE OF CONTENTS (Continued)

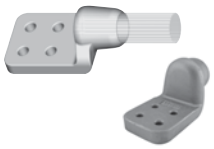

Welded Terminals

Type **SWA-A-N** for Cable **M-11**
Type **SWA-A-N** for Bus **M-12**
Type **SWAC-A-N** for Bus (Center formed) **M-13**
Type **SWXA-A-NK** Expansion for Bus (Corona protection 345 kV) **M-14**
Type **SWXA-A-N** Expansion for Bus (Corona Rings) **M-15**

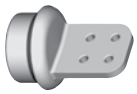

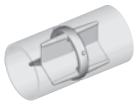

Welded Couplers

Type **WSLB-A** Bus to Bus **M-16**
Type **WS-A** Bus to Bus **M-17**
Type **SWXP-A-A** Bus to Bus Expansion **M-18**

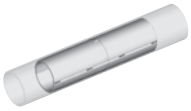

Welded T-Connectors

Type **SWAB-A-N** Bus to Pad **M-19**
Type **SWT-A-A** Bus to Bus **M-20, M-21**
Type **SWT-A-A-75** 75° Angle **M-22**
Type **SWAT-A-A-30** 30° Angle **M-23**

Welded Bus Supports

Type **SWOH-A** Fixed Bus Support to Insulator **M-24**
Type **SWHRH-A** Fixed or Slip Fit Bus Support to Insulator **M-25**
Type **SWVH-A** Vertical **M-26**
Type **SWXHP-A** Bus to Bus Expansion Coupler to Insulator **M-27**

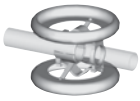

Miscellaneous

Type **SWL-A** Bus to Bus Elbow 90° **M-28**
Type **WLB-A** Bus to End Cap **M-29**
Type **SCB-A** Bus to Corona Bell **M-29**
Type **SWCB-A** Ground Stud Bus to Corona Sphere **M-30**
Type **WSBC** Ball Coupler **M-31**

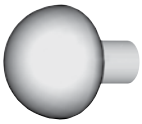

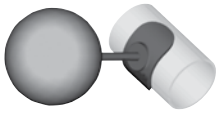

Blue highlighted items are industry standard and most frequently ordered.

TABLE OF CONTENTS (Continued)

Shielding Caps
Type **STS-A-N** Bolted 2-Piece **M-32**
Type **STS-A-NCG** Bolted 1-Piece **M-32**

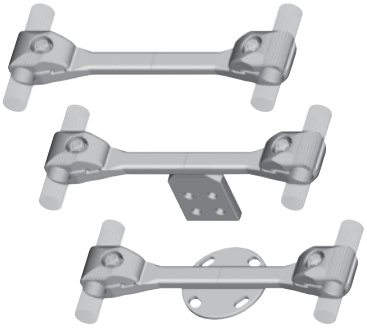

Cable Spacers

Types **S2GBP-A** Spacer, **M-33,**
S2GBPA-A Terminal Tap, **M-34**
SH2GBP-A Bus Support

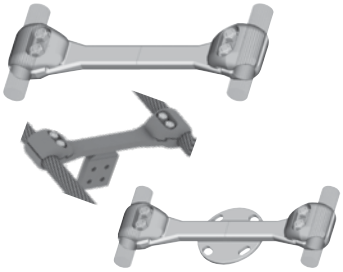

Types **S2GBP-AB2** Spacer,
S2GBPA-AB2 Terminal Tap, **M-35,**
SH2GBP-A-B2 Bus Support **M-36**

Type **S3GBP-A** Three Cable **M-37**

Bifurcating Terminal
Type **SF2A-NL-EX** **M-38**

Trifurcating Terminal
Type **SW3A-A44N8** Coupler **M-39**
Bus to Trifurcating Terminals
Type **SW3AB-A44N8** T-Connector **M-40**
Bus to Trifurcating Terminals

Blue highlighted items are industry standard and most frequently ordered.

INTRODUCTION

Connectors for use in EHV Substations must meet essentially the same electrical and mechanical requirements as those for other power connectors. However, operations at extra high voltages imposes an important additional requirement. They must not produce corona discharges that interfere with radio reception and cause energy loss.

Corona forms when the voltage gradient at the surface of a conducting material exceeds a critical value and ionizes the surrounding air. For conductors, the four basic factors that determine surface voltage gradient are distance from ground, conductor diameter, phase spacing and voltage.

In A.C. circuits, there are two basic kinds of corona. Negative corona forms during the negative half cycle, and positive corona during the positive half cycle. Negative corona generally appears as a glow on conventional conductors at about 20 kV rms/cm. Its amplitude is relatively low and cause no significant radion interference. Positive corona appears as a plume at above 30 kV rms/cm. Its amplitude is about 50 times higher than that for negative corona and is the major cause of radio interference.

BURNDY® EHV connectors are designed so that under fair weather operation conditions the voltage gradient at the connector surface will be at a level that will not cause corona and the resultant radio interference. (RIV)

BURNDY® DESIGN CRITERIA

Cable Connectors

For reasons of economy, EHV systems using stranded conductor are generally designed to operate at voltage gradients close to the negative corona onset level. It is essential, therefore, that connectors provide corona-free performance superior to that of the cable. So our design criterion calls for the voltage which corona extinguishes from the connector to be higher than the voltage at which it extinguishes from the cable. This criterion is met by eliminating all projections and by providing smooth contours on all surfaces. On compression elements, the ends are especially critical. Carefully designed tapers are provided to keep the voltage gradient at a level lower than that on the conductor. Of course, it is still necessary during installation to smooth crimped elements.

On accessories, like spacers for bundled lines, the critical areas are hose at the edges of the bundle. The bundle itself generally shields those parts that fall within it. Many projections that would cause corona on a single conductor line are quiet when they fall within the shielding influence of a bundle. However, those parts that fall at the edges are carefully finished at the factory to insure corona-free operation.

Tubular Bus Connectors

Station designers choose tubular bus sizes on the basis of mechanical rather than electrical requirements. For instance, stations that only need 4” IPS to meet electrical and corona requirements often have 6” IPS as main buses. The resultant voltage gradient on these buses is very low, perhaps only 10 kV rms/cm, well below the corona onset level.

It is impractical therefore, to require that connectors operate quieter than the bus regardless of the voltage. Under some circumstances, it might be impossible to meet such criteria. In most cases, it would be prohibitively expensive to do so.

Of course, theoretically optimum connectors could be designed for each application, based on the design voltage gradient for individual stations. However, in most cases even differences as great as that between 345 and 500 kV don’t have a meaningful impact on connector costs. So, from a practical point of view, it is feasible to design most connectors for 500 kV operation. This makes it more convenient for the station designers to select and order connectors.

Bus connectors are designed to provide corona-free performance under conditions of actual operation. This is done by calculating the voltage gradient on the surface of the bus at 500 kV, using the phase spacing and ground distance typical for this voltage. Connectors are then designed to operate corona free when the voltage gradient on the bus is 10% above this value.

The exceptions to this rule are the flexible expansion connectors. Those designed for 345 kV are self-shielding. Those for 500 kV have separate shielding rings. Experimental work on self-shielding 500 kV expansion connectors indicates that the margin of safety is too small to justify recommending them for this voltage.

Controlling Corona

Since corona is caused when the voltage gradient at the surface of a conducting material reaches a level that causes the surrounding air to break down, then obviously, the way to prevent corona is to keep the gradient below this critical level.

From this point of view the connector designer, this can be accomplished in three ways:

1. By providing generous radii on all outside surfaces to keep the voltage stresses to a minimum.
2. By providing shielding rings.
3. By placing the connector within the shielding influences of some part of the bus structure.

Since it is impossible for the connector designer to know the exact configuration of every bus system where the connectors might be used, the third approach is not practical. So, for the purposes of developing a standard line, we concentrate on the first two.

Whenever possible, connectors are designed to be self-shielding. This approach leads to less costly and less obstrusive designs. Only in the case of complicated connector configurations do BURNDY® EHV designs use corona rings. Examples of such applications are disconnectable equipment taps, expansion couplers and equipment terminals which often have configurations that preclude the use of self-shielding designs.

NOMOGRAM FOR DETERMING THE EQUIVALENT

HEIGHT (he) OF A THREE PHASE LINE

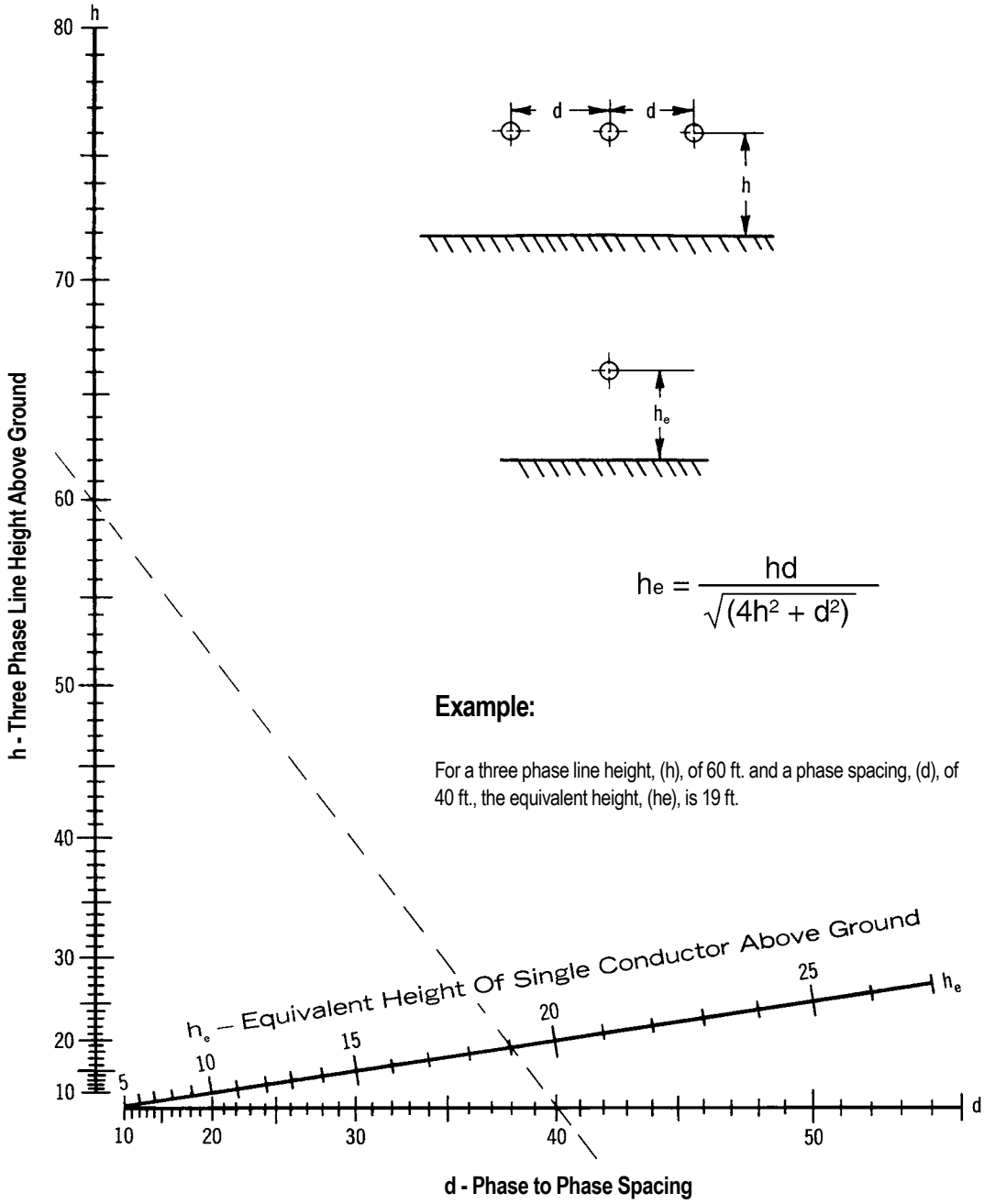

Nomogram for determining the equivalent height of a single conductor line having the same average voltage of gradient as teh CENTER conductor of a horizontally spaced three phase line, with the same line to ground voltage and the same conductor size. All dimensions measured in the same units.

The use of the laboratory is based on the fact that it is the surface voltage gradient that causes corona. Although most systems consist of 3 phase conductors and a ground plane, it is a rather simple matter to duplicate in the laboratory the conductor surface voltage gradient as it exists on any of these phase conductors with a single conductor and a ground plane.

The formulas and nomograms give this three phase to single phase equivalency. Because this conversion is possible, all EHV testing is done signle phase; and there is no necessity for 3 phase testing with its high cost in terms of equipment and space.

Since voltage gradient is the signifcant factor, the single phase test does not have to be done at the full voltage of an operation system. By setting up the test closer to the ground plane, the operation voltage gradient can be obtained with a lower test voltage. There is a limit, however, below which the height cannot be lowered lest corona onset and flashover occur simultaneously. Generally, the minimum test height should be about 10 times the diameter of the test conductor.

GRADIENT CALIBRATOR

Normally the conductor surface voltage gradient at the extinction of corona in the laboratory is calculated using the accompanying equations. However, for test setups involving unusual conductor configurations, the conductor gradient cannot be readily calculated. In these cases, a gradient calibrator may be used. This is a small sphere mounted on the conductor. It has previously been calibrated for each conductor size to establish the surface voltage gradient that starts positive corona on the sphere. With it tests can be duplicated in any number of laboratories. The applied voltages and ground distances could all be different. But the voltage gradient on the surface of the conductor when the corona occurs on the sphere will always be the same. The calibratory provides a convenient bench mark for measuring the corona performance of connectors.

In use, the sphere is mounted on the conductor in a connector test setup. The voltage is raised until there is a corona on the sphere. We already know from previous calibration what the voltage gradient on the surface of the conductor is at this point.

The sphere is removed and the voltage raised until there is a corona on the connector. Snce the voltage gradient increases directly with increases in applied voltage, the gradient on the conductor at this point can be readily calculated.

It is important to note that the significant parameter is the voltage gradient on the surface of the conductor. It is not necessary to know the gradient on the connector. The conductor gradient in any given substation is controlled by its design parameters and may be calculated using the following formulae and nomograms. Once the gradient is known, it is unnecessary to have any other information to design connectors. As long as connectors are corona-free at a conductor voltage gradient higher than that planned for the conductor, the connector will be corona-free under fair weather operating conditions.

There may be on occasion be unusual situations where choice of *conductor*, station geometry or clearance problems cause the need for connectors of special design. Where this is the case, BURNDY is prepared to design corona-free devices to operation under such conditions.

Formula for Determining the Voltage Gradient
Notations Used

h = line to ground distance (cm)
r = radius of the individual conductor (cm)
s = conductor spacing in the bundle (cm)
d - phase to phase spacing of the line (cm)
V = line to ground voltage (kV)
E_a = average gradient at the surface of the conductor (kV/cm)
E_m = maximum gradient on the surface of a single conductor
h_e = equivalent single phase line to ground distance (cm)
r_e = equivalent single conductor radius (cm) of bundled conductors
n = number of conductors in the bundle

$$E_a = \frac{V}{r \ln \frac{2h}{r}} \qquad E_m = \frac{h}{h - r} E_a$$

The maximum gradient (E_m) occurs on the side facing the ground plane.

The center conductor has a gradient about 5% higher than the outside conductors. The gradient on the center phase may be calculated using the formula for the single conductor.

Single phase system and substituting (h_e) from the following formula or attached nomograms for the height about the ground (h). For the center phase:

$$E_a = \frac{V}{r \ln \frac{2h}{r}} \qquad h_e = \frac{hd}{\sqrt{(4h^2 + d^2)}}$$

It should be noted that h_e is somewhat smaller than $\frac{d}{2}$

$$E_a = \frac{V}{n\, r \ln \frac{2h}{r_e}} \qquad \text{in which } r_e = r\left(\ell \frac{s}{r}\right)^{\frac{n-1}{n}}$$

The value of " ℓ " is unity for 1-, 2-, and 3- conductor bundles and 1.12 for 4- conductor bundles.

Bundled Conductor - Three Phase

This case may be reduced to the single bundled conductor case by replacing h with h_e in the equation. The definition of h_e is identical to that given for the single conductor — three phase situation.

Blue highlighted items are industry standard and most frequently ordered.

Canada: 1-800-387-6487 www.burndy.com US: 1-800-346-4175

NOMOGRAM FOR FINDING THE AVERAGE CONDUCTOR-SURFACE VOLTAGE-GRADIENT FROM LINE DIMENSIONS AND VOLTAGE

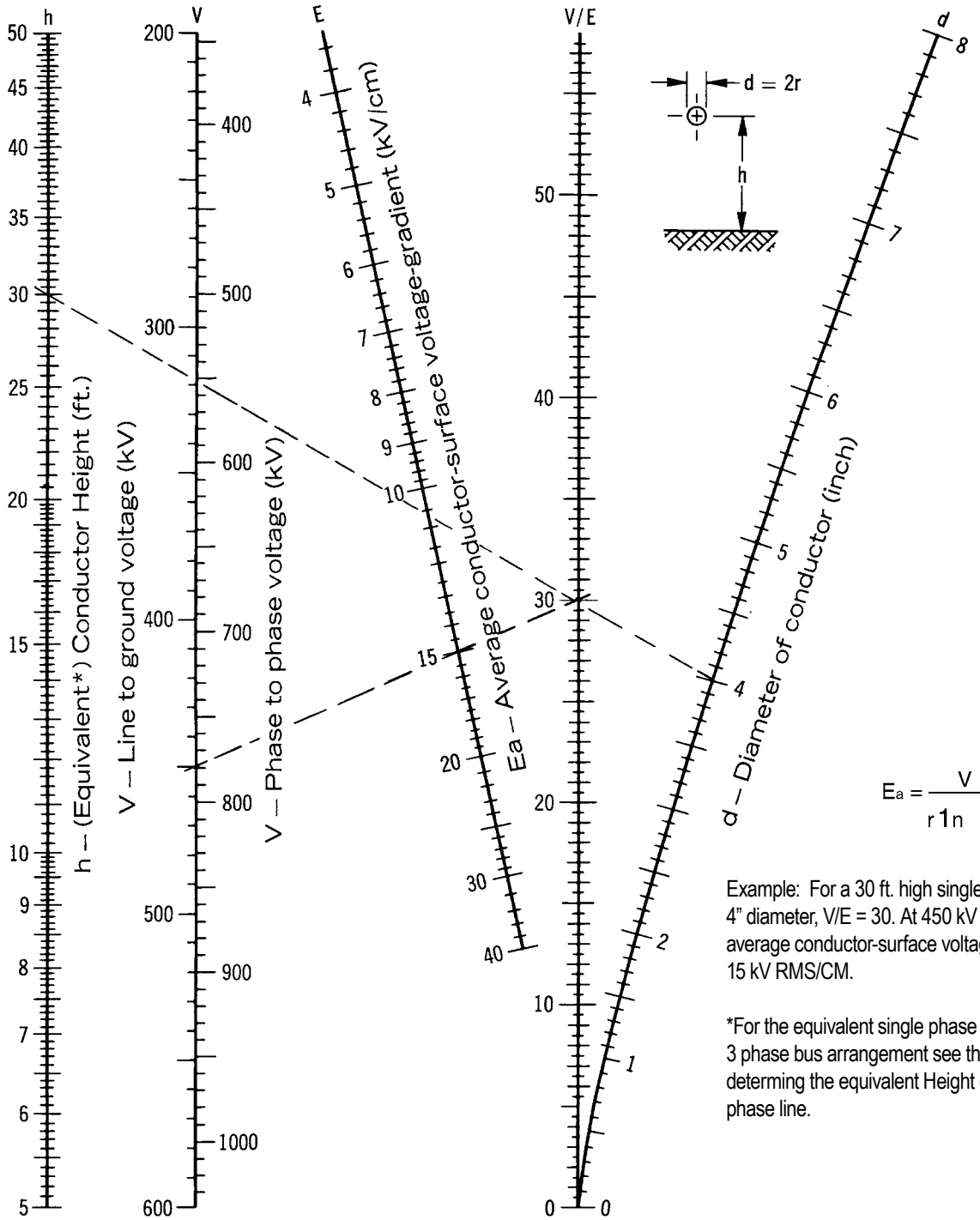

$$E_a = \frac{V}{r \ln \frac{2h}{r}}$$

Example: For a 30 ft. high single phase bus* of 4" diameter, V/E = 30. At 450 kV to ground the average conductor-surface voltage-gradient is 15 kV RMS/CM.

*For the equivalent single phase height (he) of a 3 phase bus arrangement see the nomogram for determing the equivalent Height (he) of a three phase line.

Blue highlighted items are industry standard and most frequently ordered.

US: 1-800-346-4175 **www.burndy.com** **Canada: 1-800-387-6487**

RADIO INTERFERENCE VOLTAGE

There is serious question as to whether measurement of RIV on connectors makes a meaningful contribution to quieter station operation.

Under test conditions, there is generally no significant indication on the radio noise meter until the onset of visible positive corona. At this point, the RIV reading goes into the hundreds of thousands of microvolts. The effect of this phenomenon is to provide a visibly discernable point at which RIV will be excessive. It eliminates the necessity to make, record and plot RIV measurements. Where there is no corona, there is no RIV. So our test criterion calling for no visible corona insures that there will be no radio interference generated by the connector under operating conditions.

EFFECT OF CONDUCTOR SIZE ON TESTING

Conductor diameter has a significant effect on potential corona problems. The larger the diameter, the lower the surface voltage gradient for a given test voltage. This means that smaller conductors produce corona at lower voltages than larger ones.

Many connector designs have the same basic configuration for various conductor sizes. The only difference being the size of the attaching elements. This is particularly true for many of the welded type connectors. Where this is the case, it is often sufficient to test the connector only on the smallest conductor, since it yields the lowest corona extinction voltage. When there is any doubt, each size is tested.

CONTAMINATION

Much work has been done to establish the relationship between the corona onset voltage for contaminated as compared to clean hardware. Experiments in the BURNDY laboratory indicate that this value can be reduced to half of the voltage for clean hardware. However, the relationship varies with the kind of contamination, atmospheric condition and type of connector.

There have been a number of attempts to produce artificial contamination and atmospheres in laboratories. However, there is as yet no clearly established relationship between the corona performance of hardware contaminated in the laboratory. Until such a relationship is established, the only testing that provides comparable data is on clean hardware under fair weather conditions.

CONCLUSION

For more than 85 years, BURNDY has been designing connectors for the industry's most critical applications. Connectors for EHV are an outgrowth of this tradition. Whether your need is for catalog items or special designs, you can count on electrical, mechanical and corona-free performance, commensurate with the application.

TYPICAL CURVE

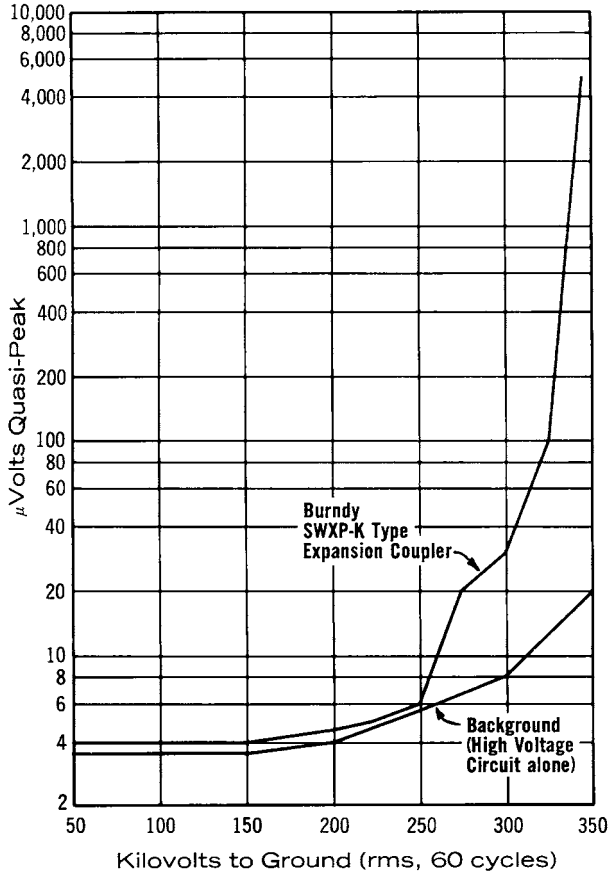

Blue highlighted items are industry standard and most frequently ordered.

WELDED TERMINAL CONNECTOR

SWA-A-N for Cable

Weld type
Application: Cable to Two or Four Hole Pad (offset terminal)

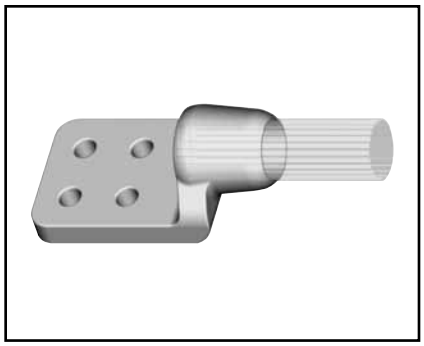

EHV RATED: UP TO 550 kV when used with shielding caps

Material: Cast 356 Aluminum Alloy

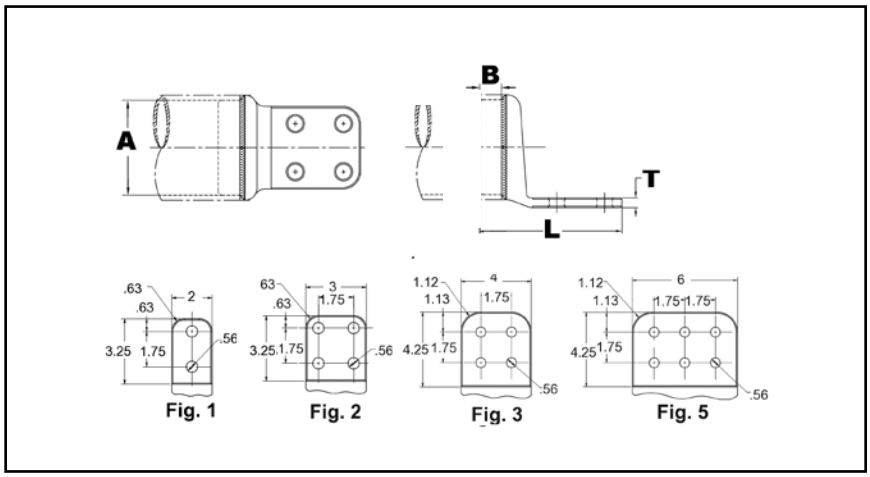

Catalog Number	Accommodates "A" Dia.		Str.	Max. Dia.	Max. Dia.	Fig. No.	B	L	T
	Alum. Cable	ACSR Cable							
SWA44R-44N	700 kcmil thru 874.5 kcmil	605 kcmil thru 874.5 kcmil	26-7 30-19	0.961 [24]	1.085 [28]	3	1.50 [38]	6.25 [159]	0.50 [13]
SWA48A-44N	2000 kcmil thru 2250 kcmil	2167 kcmil	72-7	1.606 [41]	1.740 [44]	3	2.62 [67]	7.50 [191]	0.82 [21]
SWA54R-44N	1400 kcmil thru 1600 kcmil	1272 kcmil thru 1510.5 thru	45-7	1.341 [34]	1.470 [37]	3	2.00 [51]	6.56 [167]	0.56 [14]
SWA58R-44N	1700 kcmil thru 1900 kcmil	1510.5 kcmil thru 1780 kcmil	54-49 54-19	1.471 [37]	1.605 [41]	3	2.50 [64]	7.25 [184]	0.69 [18]
SWA444A-44N	900 kcmil thru 1100 kmcil	795 kcmil thru 954 kcmil	54-7	1.086 [28]	1.210 [31]	3	1.75 [44]	6.56 [167]	0.50 [13]
SWA486A-44N	2300 kcmil thru 2500 kcmil	2156 kcmil thru 2300 kcmil	84-19 96-19	1.741 [44]	1.875 [48]	3	2.62 [67]	7.50 [191]	1.12 [28]
SWA486A-4N	2300 kcmil thru 2500 kcmil	2156 kcmil thru 2300 kcmil	84-19 96-19	1.741 [44]	1.875 [48]	2	2.62 [67]	6.12 [156]	1.12 [28]
SWA486A-66N	2300 kcmil thru 2500 kcmil	2156 kcmil thru 2300 kcmil	84-19 96-19	1.741 [44]	1.875 [48]	5	2.62 [67]	7.50 [191]	1.12 [28]
SWA493R-4N	3000 kcmil	—	127 169	1.876 [48]	2.05 [52]	2	3.00 [76]	6.75 [172]	1.00 [25]

NOTES:
1. Dimensions in brackets [ ] are in millimeters.
2. DOES NOT INCLUDE SHIELDING CAPS. For EHV applications, shielding caps are required. Order seprately (type) shown on page 32 or ADD SUFFIX "STS" to catalog number (example: SWA54R-44NSTS), includes one Type STS shielding cap.
3. One surface of pad finished. For finished pad on both sides add SUFFIX "Q" to the catalog number (example: SWA22A-44NQ).
4. For 45 or 90 degree angle add SUFFIX "45" or "90" to catalog number (example: SWA54R-44N90).

Blue highlighted items are industry standard and most frequently ordered.

WELDED TERMINAL CONNECTOR

SWA-A-N

Weld type
Application: Bus to Two or Four Hole Pad (offset terminal)

EHV RATED: UP TO 550 kV when used with Shielding Caps

Material: Cast 356 Aluminum Alloy

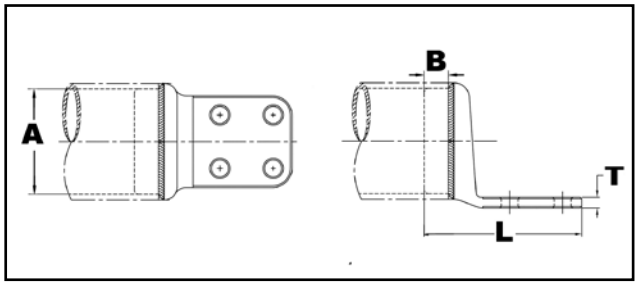

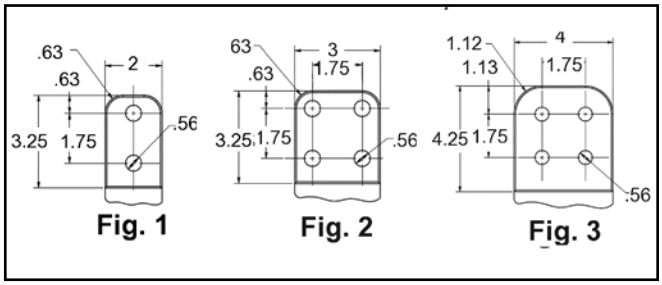

Catalog Number		Accommodates "A" Dia. Alum. Tube	Fig.	B	L	T
IPS (Sch. 40)	EHPS (Sch. 80)					
SWA18A-2N	SWA58A-2N	2" (2.375 Dia.)	1	1.25 [32]	5.88 [149]	0.50 [13]
SWA18A-34N	SWA58A-34N		2	1.25 [32]	5.88 [149]	0.50 [13]
SWA18A-44N	SWA58A-44N		3	1.25 [32]	6.95 [177]	0.50 [13]
SWA19A-2N	SWA59A-2N	2-1/2" (2.875 Dia.)	1	1.50 [38]	6.36 [162]	0.56 [14]
SWA19A-34N	SWA59A-34N		2	1.50 [38]	6.36 [162]	0.56 [14]
SWA19A-44N	SWA59A-44N		3	1.50 [38]	7.40 [188]	0.56 [14]
SWA20A-2N	SWA90A-2N	3" (3.500 Dia.)	1	1.75 [44]	6.41 [163]	0.62 [16]
SWA20A-34N	SWA90A-34N		2	1.75 [44]	6.41 [163]	0.62 [16]
SWA20A-44N	SWA90A-44N		3	1.75 [44]	7.46 [189]	0.62 [16]
SWA21A-34N	SWA91A-34N	3-1/2" (4.000 Dia.)	2	1.75 [44]	6.40 [163]	0.62 [16]
SWA21A-44N	SWA91A-44N		3	1.75 [44]	7.47 [190]	0.62 [16]
SWA22A-44N	SWA92A-44N	4" (4.500 Dia.)	3	2.00 [51]	7.51 [191]	0.75 [19]
SWA23A-44N	SWA93A-44N	4-1/2" (5.000 Dia.)	3	2.00 [51]	7.77 [197]	0.75 [19]
SWA24A-34N	SWA94A-34N	5" (5.563 Dia.)	2	2.00 [51]	6.80 [173]	0.75 [19]
SWA24A-44N	SWA94A-44N		3	2.00 [51]	7.82 [199]	0.75 [19]
SWA86A-44N	SWA96A-44N	6" (6.625 Dia.)	3	2.50 [64]	7.90 [201]	1.00 [25]

NOTES:
1. Dimensions in brackets [ ] are in millimeters.
2. Conductor smaller than 3 inch bus size not recommended for 550 kV.
3. DOES NOT INCLUDE SHIELDING CAPS. For EHV applications, shielding caps are required. Order separately (Type STS) or ADD SUFFIX "STS" to catalog number (example: SWA22A44NSTS), includes one shielding cap.
4. One surface of pad finished. For finished pad on both sides add SUFFIX "Q" to the catalog. number (example: SWA22A-44NQ).
5. For 45 or 90 degree angle add SUFFIX "45" or "90" to catalog number (example: SWA22A44N90).
6. For six hole NEMA pad contact factory.

Blue highlighted items are industry standard and most frequently ordered.

WELDED TERMINAL CONNECTOR

SWAC-A-N

Weld type
Application: Bus to Two or Four Hole Pad (center formed)

EHV RATED: UP TO 550 kV when used with Shielding Caps

Material: Cast 356 Aluminum Alloy

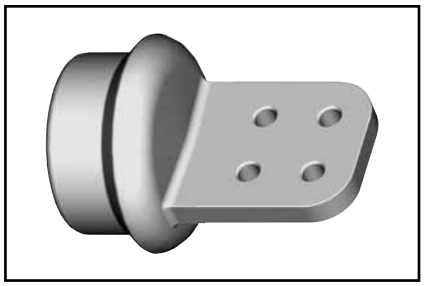

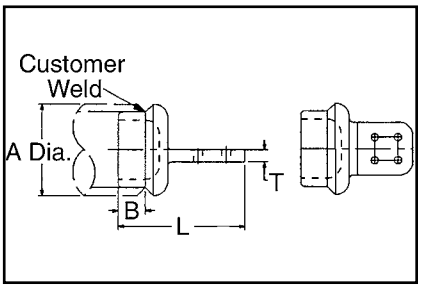

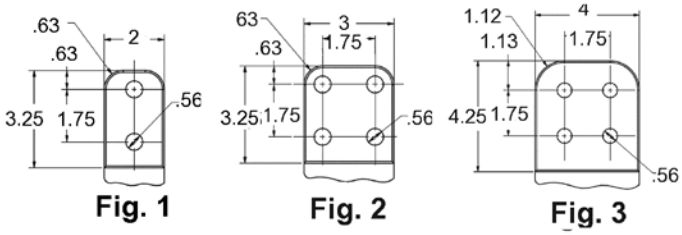

Catalog Number		Conductor		Fig. No.	Dimensions In.		
IPS (Sch. 40)	EHPS (Sch. 80)	IPS	A		B	L	T
SWAC18A-2N	SWAC58A-2N	2"	2.38 [60]	1	1.25 [32]	5.80 [147]	0.50 [13]
SWAC18A-34N	SWAC58A-34N			2	1.25 [32]	5.80 [147]	0.50 [13]
SWAC18A-44N	SWAC58A-44N			3	1.25 [32]	6.86 [174]	0.50 [13]
SWAC19A-2N	SWAC59A-2N	2-1/2"	2.88 [73]	1	1.50 [38]	6.23 [158]	0.56 [14]
SWAC19A-34N	SWAC59A-34N			2	1.50 [38]	6.23 [158]	0.56 [14]
SWAC19A-44N	SWAC59A-44N			3	1.50 [38]	7.29 [185]	0.56 [14]
SWAC20A-2N	SWAC90A-2N	3"	3.50 [89]	1	1.75 [44]	6.30 [160]	0.62 [16]
SWAC20A-34N	SWAC90A-34N			2	1.75 [44]	6.30 [160]	0.62 [16]
SWAC20A-44N	SWAC90A-44N			3	1.75 [44]	7.36 [187]	0.62 [16]
SWAC21A-34N	SWAC91A-34N	3-1/2"	4.00 [102]	2	1.75 [44]	6.30 [160]	0.62 [16]
SWAC21A-44N	SWAC91A-44N			3	1.75 [44]	7.36 [187]	0.62 [16]
SWAC22A-34N	SWAC92A-34N	4"	4.50 [114]	2	2.00 [51]	6.40 [163]	0.75 [14]
SWAC22A-44N	SWAC92A-44N			3	2.00 [51]	7.40 [188]	0.75 [19]
SWAC23A-34N	SWAC93A-34N	4-1/2"	5.00 [127]	2	2.00 [51]	6.23 [158]	0.56 [19]
SWAC24A-34N	SWAC94A-34N	5"	5.56 [141]	2	2.00 [51]	6.68 [170]	0.75 [19]
SWAC24A-44N	SWAC94A-44N			3	2.00 [51]	7.72 [196]	0.75 [19]
SWAC86A-44N	SWAC96A-44N	6"	6.62 [168]	3	2.50 [64]	7.75 [197]	1.00 [25]

NOTES:
1. Dimensions in brackets [ ] are in millimeters.
2. Conductor smaller than 3 inch bus size not recommended for 550 kV.
3. DOES NOT INCLUDE SHIELDING CAPS. For EHV applications, shielding caps are required. Order separately (Type STS) or ADD SUFFIX "STS" to Catalog Number (example: SWAC22A44NSTS), includes two shielding caps.
4. Pad surface finished on both sides of tongue.
5. For six hole NEMA pad contact factory.

Blue highlighted items are industry standard and most frequently ordered.

WELDED EXPANSION TERMINAL CONNECTOR

SWXA-A-NK

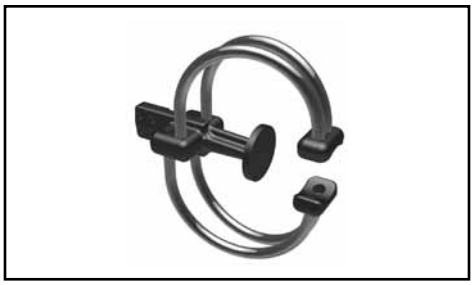

Welded type
Application: Bus to Four Hole Pad
(Expansion Terminal
with Corona protection)

EHV RATED: SELF-SHIELDING UP TO 345 kV

Material: Cast 356 Aluminum Alloy
Straps: Aluminum Cables
Rings: Aluminum Alloy Cable
Ring mounting: Aluminum
Base mounting: Galvanized Steel

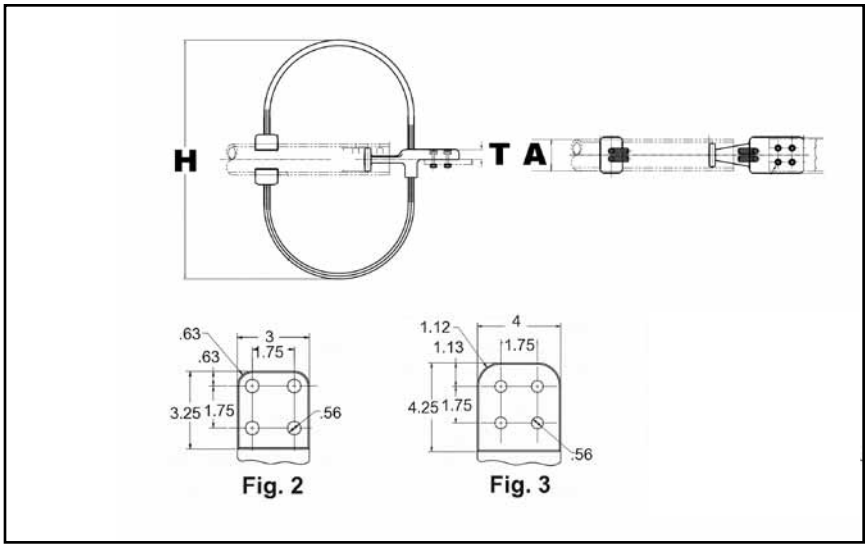

Catalog Number	Accommodates "A" Dia. Alum. Tube	H	T	Hardware Length
SWXA20A-4NK8	3″ IPS (3.500 Dia.) Sch 40	26.38 [670]	1.00 [25]	1/2″-13 X 2-3/4″ LG.
SWXA22A-4NK8	4″ IPS (5.500 Dia.) Sch 40	27.00 [686]		
SWXA24A-4NK8	5″ IPS (5.563 Dia.) Sch 40	28.06 [713]		
SWXA86A-4NK8	6″ IPS (6.625 Dia.) Sch 40	29.12 [740]		
SWXA92A-4NK8	4″ IPS (4.500 Dia.) Sch 80	27.00 [686]		
SWXA94A-4NK8	5″ IPS (5.563 Dia.) Sch 80	28.06 [713]		
SWXA96A-4NK8	6″ IPS (6.625 Dia.) Sch 80	29.12 [740]		

NOTES:
1. Table is based on 90/ft. max BUS run.
2. Dimensions in brackets [ ] are in millimeters.
3. Shielding caps not required.
4. One side of pad finished. On Centerline of tubing. For finish pad on both sides add SUFFIX "Q" to catalog number (example: SWXA22A4NK8Q).
5. Accommodates maximum pad thickness of 1.00″.

Installation Data	
Bus Temp F°	3″ Total Movement Z
–20	3.50
–10	3.36
0	3.23
10	3.09
20	2.95
30	2.82
40	2.68
50	2.54
60	2.41
70	2.27
80	2.14
90	2.00 ← NOMINAL POSITION
100	1.86
110	1.73
120	1.59
130	1.45
140	1.32
150	1.18
160	1.04
170	0.91
180	0.77
190	0.64
200	0.50

Blue highlighted items are industry standard and most frequently ordered.

WELDED EXPANSION TERMINAL CONNECTOR

SWXA-A-N

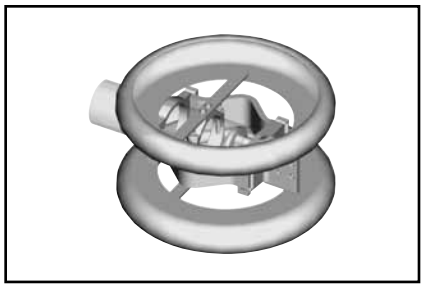

Welded type
Application: Bus to four or six hole pad (Expansion Terminal with Corona Rings)

EHV RATED: SELF-SHIELDING UP TO 550 kV

Material: Cast 356 Aluminum Alloy
Straps: Laminated Aluminum
Rings: Aluminum Alloy
Ring mounting: Aluminum
Base mounting: Galvanized Steel

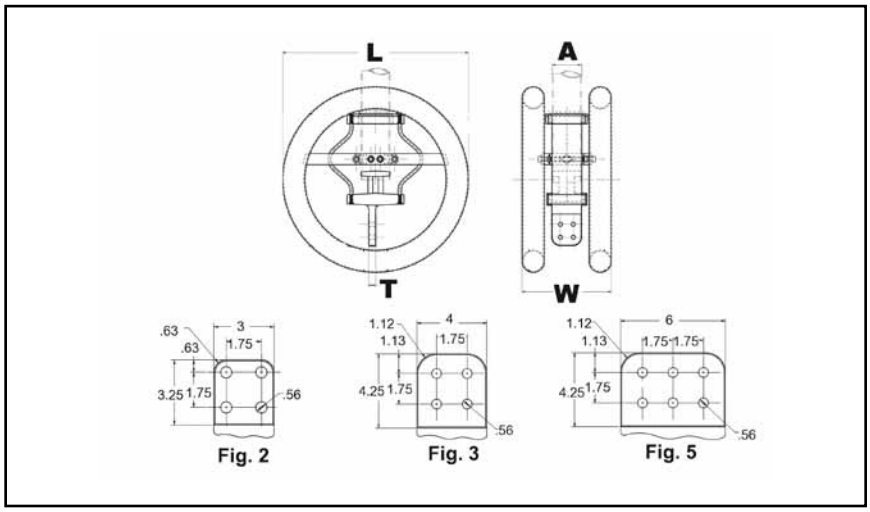

Fig. 2 Fig. 3 Fig. 5

Catalog Number	Accommodates "A" Dia. Alum. Tube	T	L	W Ref.	Total Movement	Installation Data	
						Bus. Temp. of	Z
SWXA20A-44N	3" (3.500 Dia.) Sch 40	0.75 [19]	26.00 [660]	13.19 [335]	2.00 [51]	–20	2.50
						–10	2.61
SWXA22A-44N	4" (4.500 Dia.) Sch 40	0.86 [22]		13.87 [352]		0	2.32
						10	2.21
SWXA24A-44N	5" (5.563 Dia.) Sch 40	0.81 [21]		14.50 [368]		20	2.14
						30	2.01
SWXA86A-44N	6" (6.625 Dia.) Sch 40	1.00 [25]		15.50 [394]		40	1.95
						50	1.86
SWXA92A-44N	4" (4.500 Dia.) Sch 80	0.86 [22]		13.87 [352]		60	1.77
						70	1.68
SWXA94A-44N	5" (5.563 Dia.) Sch 80	0.86 [22]		14.50 [368]		80	1.57
						90	1.50
						100	1.41
						110	1.32
						120	1.23
						130	1.14
						140	1.04
						150	0.95
						160	0.86
						170	0.77
						180	0.68
						190	0.59
						200	0.50

NOTES:
1. Table is based on 60/ft. max BUS run.
2. Dimensions in brackets [ ] are in millimeters.
3. Shielding caps not required.
4. One side of pad finished. On Centerline of tubing. For finished pad on both sides add SUFFIX "Q" to catalog number (example: SWXA22A4NQ).
5. For six hole NEMA pad change the suffix to 66N (example: SWXA22A66N).

WELDED RIGID COUPLER

WSLB-A

Weld type
Application: Bus to Bus Coupler

EHV RATED: SELF-SHIELDING UP TO 550 kV

Material: Cast 356 Aluminum Alloy

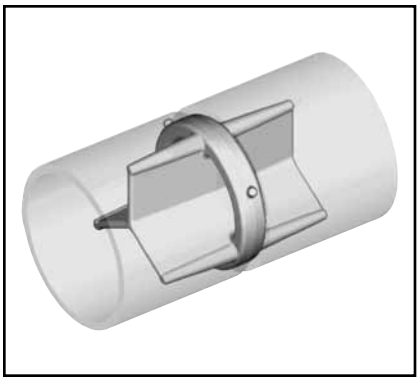

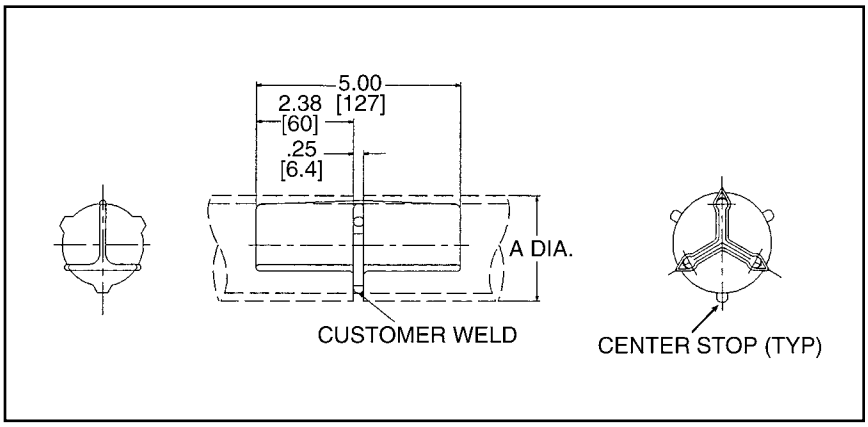

Catalog Number		OD	Conductor Aluminum Tubing Size
Sch. 40	Sch. 80		
WSLB15A	WSLB55A	1.32 [34]	1″
WSLB16A	WSLB56A	1.66 [42]	1-1/4″
WSLB17A	WSLB57A	1.90 [48]	1-1/2″
WSLB18A	WSLB58A	2.38 [60]	2″
WSLB19A	WSLB59A	2.88 [73]	2-1/2″
WSLB20A	WSLB90A	3.50 [89]	3″
WSLB21A	WSLB91A	4.00 [102]	3-1/2″
WSLB22A	WSLB92A	4.50 [114]	4″
WSLB24A	WSLB94A	5.56 [141]	5″
WSLB86A	WSLB96A	6.62 [168]	6″

NOTES:
1. Dimensions in brackets [ ] are in millimeters.
2. Conductors smaller than 3 inch bus size are not recommended for 550 kV.

Blue highlighted items are industry standard and most frequently ordered.

US: 1-800-346-4175 **www.burndy.com** **Canada: 1-800-387-6487**

WELDED RIGID COUPLER

WS-A

Weld type
Application: Bus to Bus Coupler

EHV RATED : SELF-SHIELDING UP TO 550 kV

Material: Cast 356 Aluminum Alloy

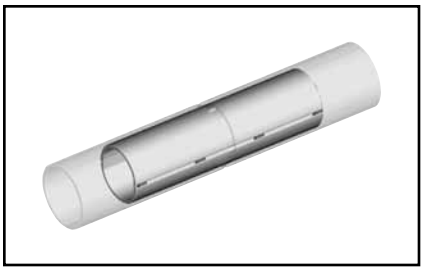

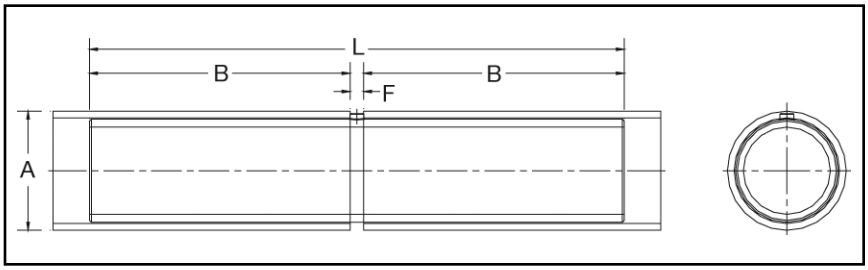

Catalog Number	Conductor (IPS) "A" Schedule 40	Conductor (EHPS) "A" Schedule 80	Dimensions Inches		
			B	F	L
WS14A	3/4" (1.050 Dia.)	—	2.13 [54.1]	0.23 [5.8]	4.50 [114.3]
WS15A	1" (Dia.)	—	2.13 [54.1]	0.23 [5.8]	4.50 [114.3]
WS16A	1-1/4" (1.660 Dia.)	—	3.60 [91.4]	0.28 [7.1]	7.50 [190.5]
WS17A	1-1/2" (1.900 Dia.)	—	4.36 [110.7]	0.29 [7.4]	9.00 [228.6]
WS18A	2" (2.375 Dia.)	—	5.88 [149.4]	0.31 [7.9]	12.00 [304.8]
WS19A	2-1/2" (2.875 Dia.)	—	7.31 [185.7]	0.39 [9.9]	15.00 [381.0]
WS20A	3" (3.500 Dia.)	—	8.81 [223.8]	0.44 [11.2]	18.00 [457.2]
WS21A	3-1/2" (4.000 Dia.)	—	8.75 [222.3]	0.47 [11.9]	18.00 [457.2]
WS22A	4" (4.500 Dia.)	—	8.75 [222.3]	0.47 [11.9]	18.00 [457.2]
WS24A	5" (5.563 Dia.)	—	8.75 [222.3]	0.50 [12.7]	18.00 [457.2]
WS58A	6" (6.625 Dia.)	—	8.75 [222.3]	0.56 [14.2]	18.00 [457.2]
WS59A	—	2" (2.375 Dia.)	5.88 [149.4]	0.31 [7.9]	12.00 [304.8]
WS86A	—	2-1/2" (2.875 Dia.)	7.31 [185.7]	0.39 [9.9]	15.00 [381.0]
WS90A	—	3" (3.500 Dia.)	8.81 [223.8]	0.44 [11.2]	18.00 [457.2]
WS91A	—	3-1/2" (4.000 Dia.)	8.75 [222.3]	0.47 [11.9]	18.00 [457.2]
WS92A	—	4" (4.500 Dia.)	8.75 [222.3]	0.47 [11.9]	18.00 [457.2]
WS94A	—	5" (5.563 Dia.)	8.75 [222.3]	0.50 [12.7]	18.00 [457.2]
WS96A	—	6" (6.625 Dia.)	8.75 [222.3]	0.56 [14.2]	18.00 [457.2]

NOTES:
1. Dimensions in brackets [ ] are in millimeters.
2. Conductor smaller than 3 inch bus size not recommended for 550 kV.

Blue highlighted items are industry standard and most frequently ordered.

WELDED EXPANSION COUPLER

SWXP-A-A

Weld type
Application: Bus to Bus Expansion

EHV RATED : SELF-SHIELDING UP TO 550kV

Material: Cast 356 Aluminum Alloy
Hardware: Aluminum Alloy
Corona Rings: Aluminum Alloy
Straps: Laminated Aluminum Strap

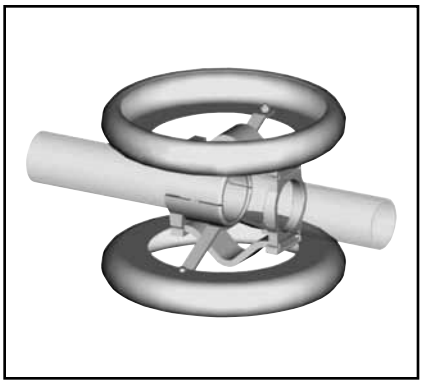

Installation Data	
Bus Temp F°	3 Total Movement Z
–20	0.50
–10	0.64
0	0.77
10	0.91
20	1.04
30	1.18
40	1.32
50	1.45
60	1.59
70	1.73
80	1.86
90	2.00 ← NOMINAL POSITION
100	2.14
110	2.27
120	2.41
130	2.54
140	2.68
150	2.82
160	2.95
170	3.09
180	3.23
190	3.36
200	3.50

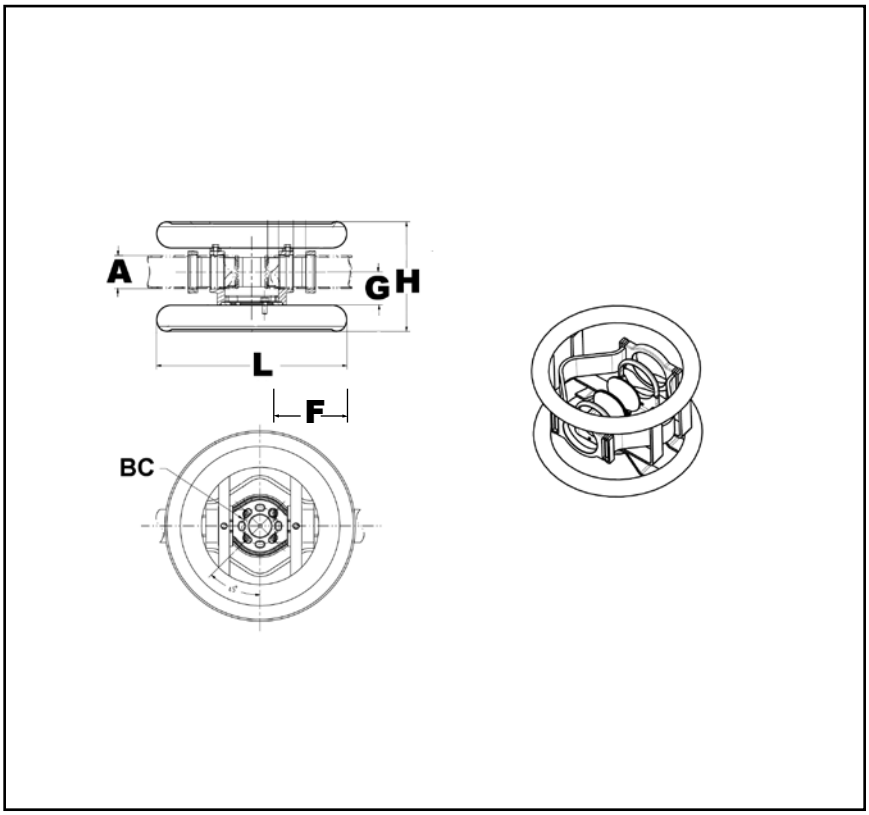

Catalog Number		"A" Dia. Alum. Tube	F	H	W	Total ① Movement
Sch. 40	Sch. 80					
SWXP20A20A	**SWXP90A90A**	3" (3.50 Dia.) [89]	5.25 [133]	22.00 [559]	17.05 [433]	3.00 [76]
SWXP22A22A	**SWXP92A92A**	4" (4.50 Dia.) [114]	6.38 [162]	22.00 [559]	18.89 [480]	4.00 [102]
SWXP24A24A	**SWXP94A94A**	5" (5.50 Dia.) [141]	7.88 [200]	26.00 [660]	19.25 [489]	4.00 [102]
SWXP86A86A	**SWXP96A96A**	6" (6.50 Dia.) [168]	8.88 [226]	26.00 [660]	20.31 [516]	4.00 [102]

NOTES:
① Maximum movement per end equals one-half of total movement specified in table. Table is based on 90 ft. bus run (total) or 45 ft. per end.
2. Dimensions in brackets [ ] are in millimeters.
3. Conductors smaller than 3 inch not recommended for 550 kV.

Blue highlighted items are industry standard and most frequently ordered.

WELDED T-CONNECTOR

SWAB-A-N

Weld type
Application: Bus to Pad

EHV RATED : UP TO 550 kV when used with Shielding Caps

Material: Cast 356 Aluminum Alloy

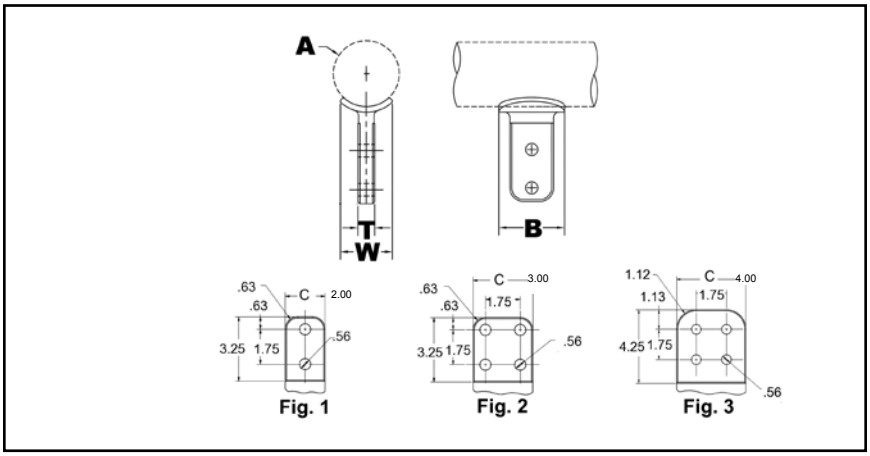

Catalog Number	Complete Range Aluminum Tube	Fig. #	Dimensions - Inches					
			B	T	W	Aluminum IPS Pipe		
						Nominal	A	Y
SWAB19A2N	1" to 2-1/2"	1	3.00 [76]	0.38 [10]	1.32 [34]	1"	1.32 [34]	4.45 [113]
						1-1/4"	1.66 [42]	4.67 [119]
						1-1/2"	1.90 [48]	4.80 [122]
SWAB19A-34N		2	4.00 [102]	0.50 [13]	1.32 [34]	2"	2.38 [60]	5.08 [129]
						2-1/2"	2.88 [73]	5.32 [135]
SWAB22A2N	2-1/2" to 4"	1	3.00 [76]	0.75 [19]	2.40 [61]	2-1/2"	2.88 [73]	5.25 [133]
						3"	3.50 [89]	5.62 [143]
SWAB22A-34N		2	4.00 [102]	0.75 [19]	2.40 [61]	3-1/2"	4.00 [102]	5.92 [150]
SWAB22A-44N		3	4.50 [114]	0.75 [19]	2.40 [61]	4"	4.50 [114]	6.21 [158]
SWAB86A2N	3" to 6"	1	3.00 [76]	1.00 [25]	2.62 [67]	3"	3.50 [89]	5.58 [142]
						3-1/2"	4.00 [102]	6.08 [154]
						4"	4.50 [114]	6.36 [162]
						4-1/2"	5.00 [127]	6.36 [162]
SWAB86A34N		2	4.00 [102]	1.00 [25]	2.62 [67]	5"	5.56 [141]	6.67 [169]
SWAB86A-44N		3	4.50 [114]	1.00 [25]	2.62 [67]	6"	6.62 [168]	7.24 [184]

NOTES:
1. Dimensions in brackets [ ] are in millimeters.
2. Conductor smaller than 3 inch bus size not recommended for 550 kV.
3. DOES NOT INCLUDE SHIELDING CAPS. For EHV applications, shielding caps are required. Order separately (Type STS) or ADD SUFFIX "STS" to Catalog Number (example: SWAB22A44NSTS), includes two shielding caps.
4. Pad surface finished on both sides of tongue.
5. For six hole NEMA pad contact factory.

Blue highlighted items are industry standard and most frequently ordered.

WELDED T-CONNECTOR

SWT-A-A

Weld Type
Application : Bus to Bus
T-Connector.

EHV RATED : SELF SHIELDING UP TO 550 kV

Material: Cast 356 Aluminum Alloy

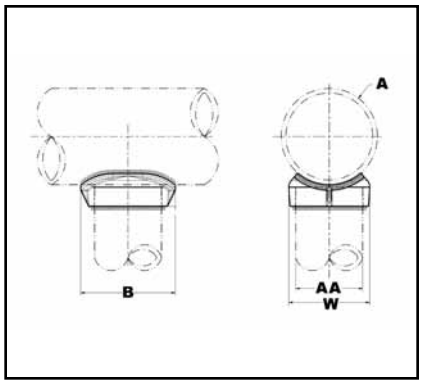

Catalog Number	Run 'A' Aluminum Tube	Tap 'AA' Aluminum Tube		Run Data		Dimensions Inches	
		Tube	AA	Nom. Tube	A	B	W
SWT17A17A	1-1/2"	1/2"	1.90 [48]	1-1/2"	1.90 [48]	3.19 [81]	2.64 [67]
SWT19A19A	2 1/2"	2-1/2"	2.88 [27]	2-1/2"	2.88 [73]	4.00 [54]	3.78 [96]
SWT21A14A	2" To 3-1/2"	3/4"	1.05 [28]	2"	2.38 [60.4]	2.12 [54]	1.75 [44]
				2-1/2"	2.88 [73]		
				3"	3.50 [89]		
				3-1/2"	4.00 [102]		
SWT21A15A	2" To 3-1/2"	1"	1.32 [34]	2"	2.38 [60.4]	2.38 [60.4]	2.28 [60]
				2-1/2"	2.88 [73]		
				3"	3.50 [89]		
				3-1/2"	4.00 [102]		
SWT21A16A	2" To 3-1/2"	1-1/4"	1.66 [42]	2"	2.38 [60.4]	2.69 [68]	2.36 [60]
				2-1/2"	2.88 [73]		
				3"	3.50 [89]		
				3-1/2"	4.00 [102]		

NOTES:
1. Dimensions in brackets [ ] are in millimeters.
2. Conductor smaller than 3 inch bus size not recommended for 550 kV.

Blue highlighted items are industry standard and most frequently ordered.

US: 1-800-346-4175 **www.burndy.com** **Canada: 1-800-387-6487**

WELDED T-CONNECTOR
(Continued)

SWT-A-A

Catalog Number	Run 'A' Aluminum Tube	Tap 'AA' Aluminum Tube		Run Data		Dimensions Inches	
		Tube	AA	Nom. Tube	A	B	W
SWT21A17A	2" To 3-1/2"	1-1/2"	1.90 [48]	2"	2.38 [60.4]	3.19 [81]	2.62 [67]
				2-1/2"	2.88 [73]		
				3"	3.50 [89]		
				3-1/2"	4.00 [102]		
SWT21A18A	2" To 3-1/2"	2"	2.38 [60.4]	2"	2.38 [60.4]	4.00 [102]	3.33 [84]
				2-1/2"	2.88 [73]		
				3"	3.50 [90]		
				3-1/2"	4.00 [102]		
SWT21A19A	2" To 3-1/2"	2-1/2"	2.88 [73]	2-1/2"	2.88 [73]	4.00 [102]	3.78 [96]
				3"	3.50 [90]		
				3-1/2"	4.00 [102]		
SWT21A20A	2" To 3-1/2"	3"	3.50 [90]	3"	3.50 [102]	4.56 [116]	4.52 [115]
				3-1/2"	4.00 [102]		
SWT22A18A	4"	2"	2.38 [60.4]	4"	4.50 [114]	4.00 [102]	3.50 [102]
SWT22A19A		2-1/2"	2.88 [73]			4.00 [102]	4.80 [122]
SWT22A20A		3"	3.50 [102]			4.56 [116]	4.50 [114]
SWT22A21A		3-1/2"	4.00 [102]			5.50 [140]	5.00 [127]
SWT22A22A		4"	4.50 [114]			6.00 [152]	5.60 [142]
SWT24A20A	5"	3"	3.50 [48]	5"	5.56 [141]	4.72 [102]	3.50 [102]
SWT24A21A		3-1/2"	4.00 [102]			5.50 [140]	5.00 [127]
SWT24A22A		4"	4.50 [114]			6.00 [152]	5.60 [142]
SWT24A24A		5"	5.56 [141]			7.38 [187]	6.84 [174]
SWT86A20A	6"	3"	3.50 [48]	6"	6.62 [168]	4.56 [116]	5.00 [127]
SWT86A21A		3-1/2"	4.00 [102]			5.50 [140]	5.50 [140]
SWT86A22A		4"	4.50 [114]			6.00 [152]	6.66 [169]
SWT86A24A		5"	5.56 [141]			7.38 [187]	6.84 [174]
SWT86A86A		6"	6.62 [168]			8.00 [203]	8.00 [203]

NOTES:
1. Dimensions in brackets [ ] are in millimeters.
2. Conductor smaller than 3 inch bus size not recommended for 550 kV.

Blue highlighted items are industry standard and most frequently ordered.

WELDED T-CONNECTOR

SWT-A-A-75

Weld type
Application : Bus "A" Frame Connector (75°)

EHV RATED: SELF-SHIELDING UP TO 550 kV

Material: Cast 356 Aluminum Alloy

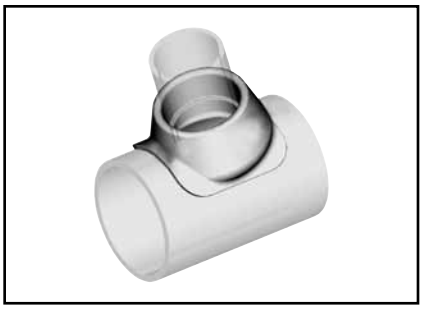

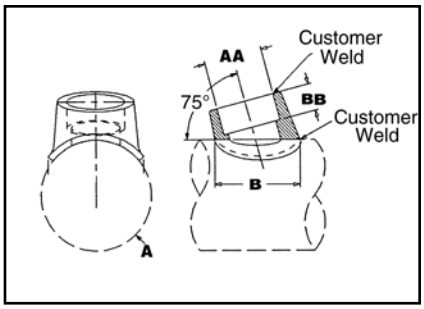

Catalog Number	Aluminum Tube				Dimensions In.	
	Run		Tap			
	Nominal	A	Nominal	AA	B	BB
SWT18A16A75	2"	2.38 [60.4]	1-1/4"	1.66 [42]	2.69 [68]	1.00 [25]
SWT18A17A75	2"	2.38 [60.4]	1-1/2"	1.90 [48]	3.19 [81]	1.00 [25]
SWT19A16A75	2-1/2"	2.88 [73]	1-1/4"	1.66 [42]	2.69 [68]	1.00 [25]
SWT19A17A75	2-1/2"	2.88 [73]	1-1/2"	1.90 [48]	3.19 [81]	1.00 [25]
SWT19A18A75	2-1/2"	2.88 [73]	2"	2.38 [60]	4.00 [102]	1.00 [25]
SWT20A17A75	3"	3.50 [89]	1-1/2"	1.90 [48]	3.19 [81]	1.00 [25]
SWT20A18A75	3"	3.50 [89]	2"	2.38 [60]	4.00 [102]	1.00 [25]
SWT20A19A75	3"	3.50 [89]	1-1/2"	2.88 [73]	4.00 [102]	1.38 [35]
SWT21A16A75	3-1/2"	4.00 [102]	1-1/4"	1.66 [42]	2.69 [68]	1.00 [25]
SWT21A17A75	3-1/2"	4.00 [102]	1-1/2"	1.90 [48]	3.19 [81]	1.00 [25]
SWT21A18A75	3-1/2"	4.00 [102]	2"	2.38 [42]	4.00 [68]	1.00 [25]
SWT21A19A75	3-1/2"	4.00 [102]	1-1/2"	2.88 [73]	4.00 [68]	1.38 [35]
SWT22A18A75	4"	4.50 [114]	2"	2.38 [60]	4.18 [105]	1.00 [25]
SWT22A19A75	4"	4.50 [114]	1-1/2"	2.88 [73]	4.00 [102]	1.38 [35]
SWT22A20A75	4"	4.50 [114]	3"	3.50 [89]	4.56 [116]	1.38 [35]
SWT24A18A75	5"	5.56 [141]	2"	2.38 [60]	4.00 [102]	1.00 [25]
SWT24A19A75	5"	5.56 [141]	1-1/2"	2.88 [73]	4.00 [102]	1.38 [35]
SWT24A20A75	5"	5.56 [141]	3"	3.50 [89]	4.56 [116]	1.38 [35]
SWT86A20A75	6"	6.62 [168]	3"	3.50 [89]	4.56 [116]	1.38 [35]
SWT86A21A75	6"	6.62 [168]	3-1/2"	4.00 [102]	5.50 [140]	1.38 [35]
SWT86A22A75	6"	6.62 [168]	4"	4.50 [114]	6.00 [152]	1.38 [35]

NOTES:
1. Dimensions in brackets [ ] are in millimeters.
2. Conductor smaller than 3 inch bus size not recommended for 550 kV.

Blue highlighted items are industry standard and most frequently ordered.

WELDED V-CONNECTOR

SWAT-A-A-30

Weld type
Application: Bus "A" Frame
Connector (30°)

EHV RATED: SELF-SHIELDING UP TO 550 kV

Material: Cast 356 Aluminum Alloy

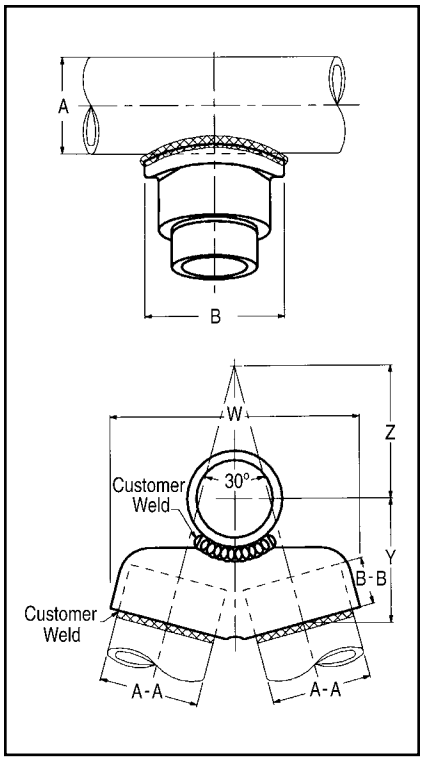

Catalog Number	Aluminum I.P.S. Run "A"	Aluminum I.P.S. Tap "A-A"	B	B-B	W	Y	Z
SWAT18A16A-30	2" (2.375 Dia.)	1-1/4" (1.660 Dia.)	3.25 [83]	1.00 [25]	4.81 [122]	3.19 [81]	1.79 [45]
SWAT18A17A-30		1-1/2" (1.900 Dia.)	3.50 [89]	1.00 [25]	5.25 [133]	3.00 [76]	2.34 [59]
SWAT18A18A-30		2" (2.375 Dia.)	4.00 [102]	1.00 [25]	6.38 [160]	3.12 [71]	3.46 [88]
SWAT19A16A-30	2-1/2" (2.875 Dia.)	1-1/4" (2.375 Dia.)	3.25 [83]	1.00 [25]	4.82 [122]	3.31 [84]	1.74 [44]
SWAT19A17A-30		1-1/2" (1.900 Dia.)	3.50 [89]	1.00 [25]	5.25 [132]	3.28 [83]	2.00 [51]
SWAT19A18A-30		2" (2.375 Dia.)	4.00 [102]	1.00 [25]	6.19 [157]	3.19 [81]	3.04 [77]
SWAT20A17A-30	3" (3.500 Dia.)	1-1/2" (1.900 Dia.)	3.50 [89]	1.00 [25]	5.12 [130]	3.44 [87]	1.87 [47]
SWAT20A18A-30		2" (2.375 Dia.)	4.00 [102]	1.00 [25]	6.25 [159]	3.50 [89]	2.71 [69]
SWAT20A19A-30		2-1/2" (2.875 Dia.)	4.38 [111]	1.38 [35]	7.19 [183]	3.88 [99]	3.41 [87]
SWAT21A16A-30	3-1/2" (4.000 Dia.)	1-1/4" (2.375 Dia.)	3.25 [83]	1.00 [25]	5.06 [129]	3.34 [85]	2.07 [53]
SWAT21A17A-30		1-1/2" (1.900 Dia.)	3.50 [89]	1.00 [25]	5.25 [132]	3.44 [87]	1.97 [50]
SWAT21A18A-30		2" (2.375 Dia.)	4.00 [102]	1.00 [25]	6.31 [160]	3.16 [80]	2.68 [68]
SWAT21A19A-30		2-1/2" (2.0875 Dia.)	4.38 [111]	1.38 [35]	7.38 [187]	4.00 [102]	3.09 [78]
SWAT21A20A-30		3" (3.500 Dia.)	5.00 [127]	1.38 [35]	8.38 [213]	4.12 [105]	4.21 [107]
SWAT22A18A-30	4" (4.500 Dia.)	2" (2.375 Dia.)	4.00 [102]	1.00 [25]	6.50 [165]	3.81 [97]	2.82 [72]
SWAT22A19A-30		2-1/2" (2.875 Dia.)	4.38 [111]	1.38 [35]	7.41 [188]	4.09 [104]	3.13 [80]
SWAT22A20A-30		3" (3.500 Dia.)	5.12 [130]	1.38 [38]	8.62 [219]	4.28 [109]	4.05 [103]
SWAT24A18A-30	5" (5.563 Dia.)	2" (2.375 Dia.)	4.00 [102]	1.00 [25]	6.50 [165]	3.81 [97]	3.06 [78]
SWAT24A19A-30		2-1/2" (2.875 Dia.)	4.38 [111]	1.38 [35]	7.38 [187]	4.47 [114]	2.87 [73]
SWAT24A20A-30		3" (3.500 Dia.)	2.12 [130]	1.38 [35]	8.62 [219]	4.62 [117]	3.76 [96]
SWAT86A20A-30	6" (6.625 Dia.)	3" (3.500 Dia.)	5.12 [130]	1.38 [35]	8.69 [221]	4.81 [122]	3.57 [91]
SWAT86A21A-30		3-1/2" (4.000 Dia.)	5.88 [149]	1.38 [35]	9.69 [246]	5.19 [132]	4.11 [104]
SWAT86A22A-30		4" (4.500 Dia.)	6.25 [159]	1.38 [35]	10.62 [270]	5.00 [127]	5.15 [131]

NOTES:
1. Dimensions in brackets [ ] are in millimeters
2. Conductor smaller than 3 inch bus size not recommended for 550 kV.

Blue highlighted items are industry standard and most frequently ordered.

WELDED RIGID BUS SUPPORT

SWOH-A

Weld type
Application : Fixed Bus Support to Insulator.

EHV RATED : SELF-SHIELDING UP TO 550kV— when used on Corona free Post Insulators

Material: Cast 356 Aluminum Alloy

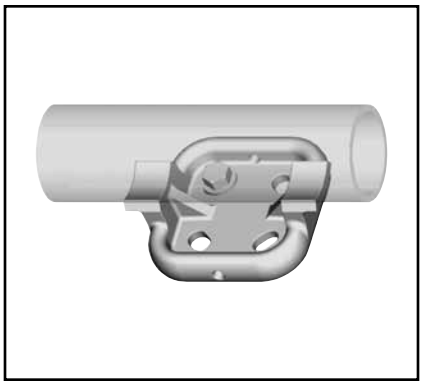

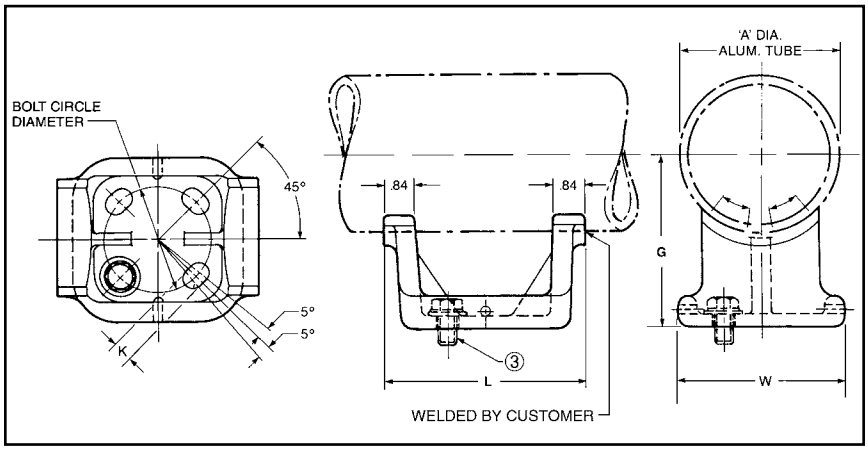

Catalog Number	"A" Dia. Alum. Tube	Bolt Circle Dia.	G	K	L	W
SWOH18A-3	2.37" (2.375 Dia.) [60]	3.00 [76]	2.75 [70]	0.56 [14]	5.60 [142]	4.96 [126]
SWOH18A-5		5.00 [127]		0.69 [18]	7.48 [190]	6.76 [172]
SWOH19A-3	2-1/2" (2.875 Dia.) [73]	3.00 [76]	3.12 [79]	0.56 [14]	6.06 [154]	5.19 [132]
SWOH19A-5		5.00 [127]		0.69 [18]	7.62 [194]	6.80 [173]
SWOH20A-3	3" (3.500 Dia.) [89]	3.00 [76]	3.00 [76]	0.56 [14]	5.78 [147]	4.96 [126]
SWOH20A-5		5.00 [127]		0.69 [18]	7.20 [183]	6.29 [160]
SWOH21A-5	3-1/2" (4.000 Dia.) [102]	5.00 [127]	4.00 [102]	0.69 [18]	7.58 [193]	6.76 [172]
SWOH22A-3	4" [114]	3.00 [76]	4.50 [114]	0.56 [14]	5.82 [148]	4.96 [126]
SWOH22A-5		5.00 [127]		0.69 [18]	7.68 [195]	6.57 [167]
SWOH24A-5	5" [141]	5.00 [127]	5.00 [127]	0.69 [18]	7.68 [195]	6.57 [167]
SWOH86A-5	6" [168]	5.00 [127]	5.50 [140]	0.69 [18]	7.68 [195]	6.57 [167]

NOTES:
1. Dimensions in brackets [ ] are in millimeters.
2. "G" dimension conforms to NEMA standards.
③ Cap mounting (galvanized steel) hardware supplied as standard. For Base Mounting hardware add SUFFIX "B" to catalog number (example: SWOH22A-5B).
4. Conductors smaller than 3 inch bus size not recommended for 550 kV.

Blue highlighted items are industry standard and most frequently ordered.

WELDED RIGID OR SLIP FIT BUS SUPPORT

SWHRH-A

Welded type
Application: Fixed or Slip Fit Bus Support to Insulator.

EHV RATED: SELF-SHIELDING UP TO 550 kV— When used on corona free Post Insulators.

Material: Cast 356 Aluminum Alloy

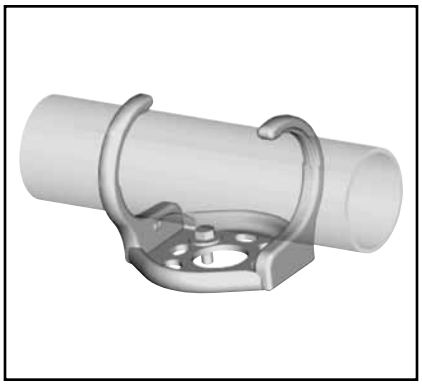

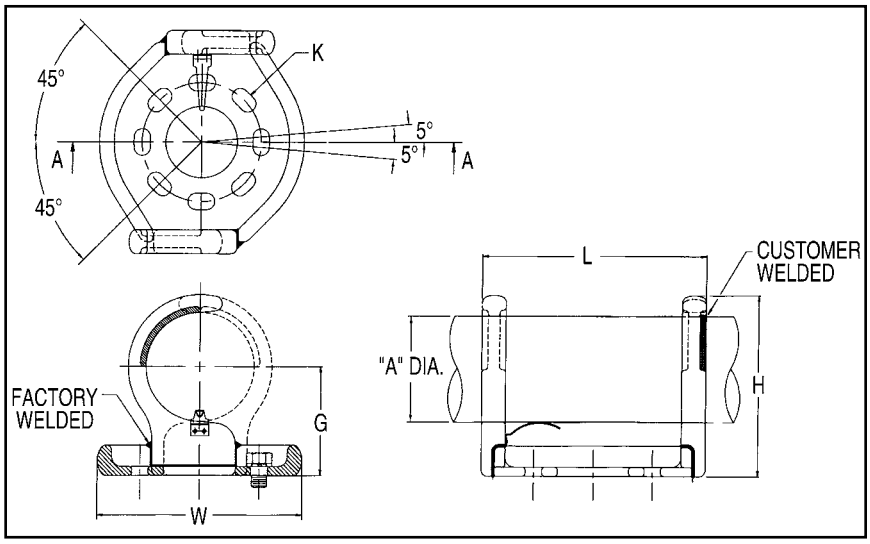

Catalog Number		Aluminum Conductor		G	H	3" Bolt Circle			5" Bolt Circle		
3" Bolt Circle	5" Bolt Circle	IPS/EHPS	"A" Dia.			K	L	W	K	L	W
SWHRH18A-3CH	SWHRH18A-5CH	2"	2.38 [60]	2.75 [70]	4.58 [116]	0.56 X 0.75 [14 X 19]	7.76 [197]	6.62 [159]	0.69 X 0.88 [18 X 22]	9.37 [238]	8.61 [219]
SWHRH19A-3CH	SWHRH19A-5CH	2-1/2"	2.88 [73]	3.12 [79]	5.21 [132]						
SWHRH20A-3CH	SWHRH20A-5CH	3"	3.50 [89]	3.62 [92]	6.15 [156]						
SWHRH21A-3CH	SWHRH21A-5CH	3-1/2"	4.00 [102]	4.00 [102]	6.77 [172]						
SWHRH22A-3CH	SWHRH22A-5CH	4"	4.50 [114]	4.50 [114]	7.52 [191]						
SWHRH24A-3CH	SWHRH24A-5CH	5"	5.56 [141]	5.00 [127]	8.68 [220]						
SWHRH86A-3CH	SWHRH86A-5CH	6"	6.63 [168]	5.50 [140]	9.71 [247]			8.61 [219]			

NOTES:
1. Dimensions in brackets [ ] are in millimeters.
2. G dimension conforms to NEMA standards.
3. Cap mounting (galvanized steel) hardware supplied as standard. For Base mounting hardware add SUFFIX "B" to catalog number (example: SWHRH22A-5B).
4. Conductors smaller than 3 inch bus size not recommended for 550 kV.

Blue highlighted items are industry standard and most frequently ordered.

WELDED VERTICAL BUS SUPPORT

SWVH-A

Weld type
Application: Bus to insulator
(Vertical Position)

EHV RATED: SELF-SHIELDING UP TO 550 kV

Material: Cast 356 Aluminum Alloy
Hardware: Galvanized Steel

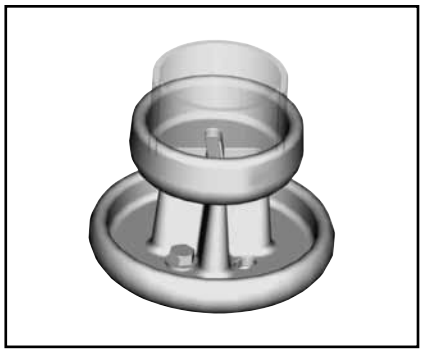

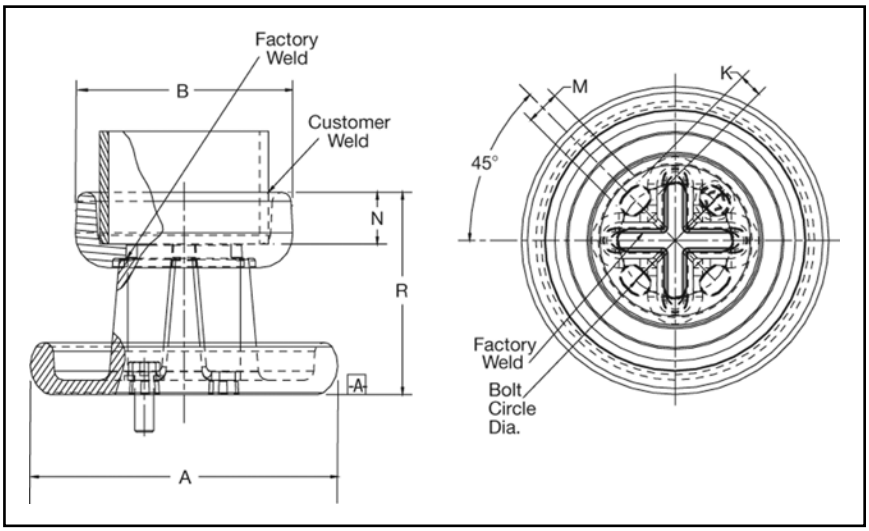

Catalog Number	Accommodates	Bolt Circle Dia.	"A" Dia.	"B" Dia.	"K" & "M" Slot	N	R
SWVH19A-5	2-1/2" IPS (2.88 Dia.) (73) Alum. Tube	5"	8.19 [208]	4.16 [106]	0.69 x 1.12 [18] [28]	1.38 [35]	5.38 [137]
SWVH19A-7		7"	10.25 [260]		0.81 x 1.44 [21] [37]		
SWVH20A-5	3" IPS (3.50 Dia.) (89) Alum. Tube	5"	8.19 [208]	4.79 [122]	0.69 x 1.12 [18] [28]		
SWVH20A-7		7"	10.25 [260]		0.81 x 1.44 [21] [37]		
SWVH22A-5	4" IPS (4.50 Dia.) (114) Alum. Tube	5"	8.19 [208]	5.79 [147]	0.69 x 1.12 [18] [28]		
SWVH22A-7		7"	10.25 [260]		0.81 x 1.44 [21] [37]		
SWVH24A-5	5" IPS (5.56 Dia.) (141) Alum. Tube	5"	8.19 [208]	6.87 [175]	0.69 x 1.12 [18] [28]		
SWVH86A-5	6" IPS (6.63 Dia.) (168) Alum. Tube	5"	8.19 [208]	7.93 [201]	0.69 x 1.12 [18] [28]		
SWVH86A-7		7"	10.25 [260]		0.81 x 1.44 [21] [37]		

NOTES:
1. Dimensions in brackets [ ] are in millimeters.
2. Cap mounting hardware supplied. For base mounted hardware add SUFFIX "B" to catalog number (example: SWVH22A5B).
3. Conductors smaller than 3 inch not recommended for 550 kV.

Blue highlighted items are industry standard and most frequently ordered.

WELDED EXPANSION BUS SUPPORT COUPLER

SWXHP-A

Weld type
Application: Bus to Bus Expansion
Coupler to Insulator

EHV RATED: SELF-SHIELDING up to 550 kV

Material: Cast 356 Aluminum Alloy
Corona Rings: Aluminum Alloy
Straps: Laminated Aluminum Strap

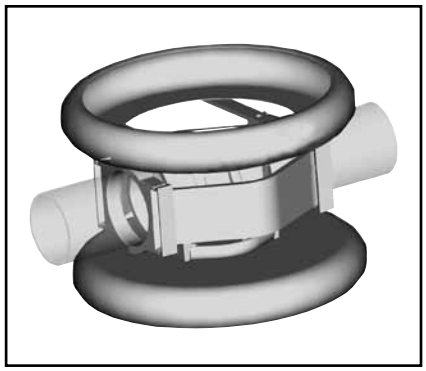

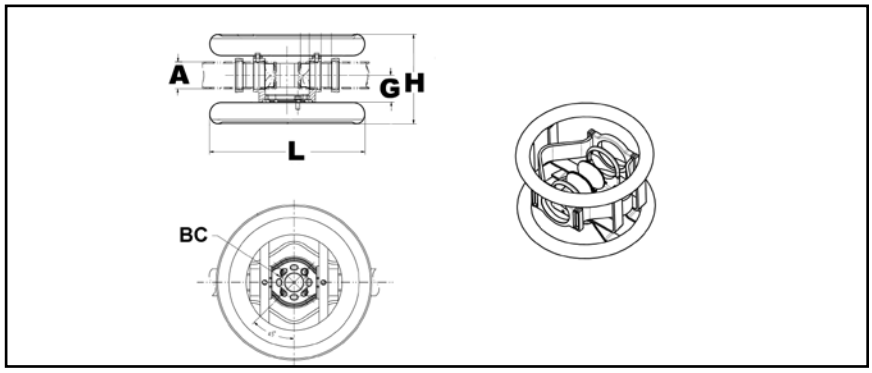

Catalog Number		"A" Dia. Alum. Tube	Bolt Circle Dia.	G*	H	L	Total ① Movement
Sch 40	Sch 80						
SWXHP19A-5	SWXHP59A-5	2-1/2" (2.88 Dia.) [73]	5.00 [127]	3.12 [79]	12.77 [18]	26.00 [660]	3.00 [76]
SWXHP20A-5	SWXHP90A-5	3" (3.50 Dia.) [89]	5.00 [127]	3.62 [92]	13.62 [18]		3.00 [76]
SWXHP21A-5	SWXHP91A-5	3-1/2" (4.00 Dia.) [102]	5.00 [127]	4.00 [102]	14.25 [18]		3.00 [76]
SWXHP22A-5	SWXHP92A-5	4" (4.50 Dia.) [114]	5.00 [127]	4.50 [114]	14.90 [18]		4.00 [102]
SWXHP24A-5	SWXHP94A-5	5" (5.56 Dia.) [141]	5.00 [127]	5.25 [133]	16.31 [18]		4.00 [102]
SWXHP86A-5	SWXHP96A-5	6" (6.63 Dia.) [168]	5.00 [127]	5.50 [140]	17.34 [18]		4.00 [102]

NOTES:

*Conforms to NEMA standards.

① Maximum movement per end equals one-half of total movement specified in table.

2. Dimensions in brackets [ ] are in millimeters.
3. Cap mounting hardware supplied (Galvanized Steel). For base mounted hardware add SUFFIX "B" to catalog number (example: SWXHP20A5B).
4. Conductors smaller than 3 inch not recommended for 550 kV.
5. Bus support couplers are supplied without bus end plugs. If end plugs are required, add SUFFIX "EP" to catalog number (example: SWXHP20A5EP).

⑥Table is based on 80 ft. max. bus run (total) or 40 ft. per end.

⑦Table is based on 110 ft. max. bus run (total) or 55 ft. per end.

Installation Data		
Bus Temp F°	3″ Total Movement	4″ Total Movement
	Z ⑥	Z ⑦
–20	0.75	0.75
–10	0.82	0.84
0	0.89	0.83
10	0.95	1.02
20	1.02	1.11
30	1.09	1.20
40	1.16	1.29
50	1.23	1.39
60	1.30	1.48
70	1.36	1.57
80	1.43	1.66
90	1.50	1.75 ◄ NOMINAL POSITION
100	1.57	1.84
110	1.64	1.93
120	1.70	2.02
130	1.77	2.11
140	1.84	2.20
150	1.91	2.29
160	1.98	2.39
170	2.05	2.48
180	2.11	2.57
190	2.18	2.66
200	2.25	2.75

Blue highlighted items are industry standard and most frequently ordered.

WELDED 90° ELBOW

SWL-A

Application: Bus to Bus Elbow, 90°

EHV RATED: SELF-SHIELDING UP TO 550 kV

Material: Cast 356 Aluminum Alloy

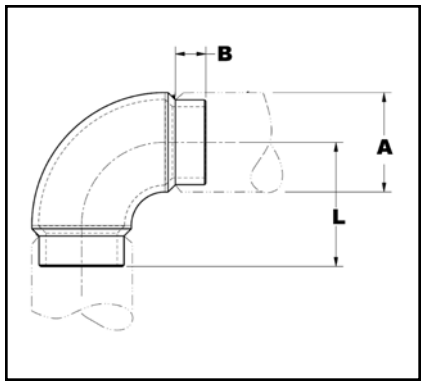

Catalog Number		Conductor Aluminum Tubing Size	Dimensions In./[mm]		
Sch. 40	Sch. 80		A Dia.	B	L
SWL18A	SWL58A	2"	2.38 [60.4]	1.00 [25]	3.50 [89]
SWL19A	SWL59A	2-1/2"	2.88 [73]	1.38 [35]	3.88 [99]
SWL20A	SWL90A	3"	3.50 [89]		4.68 [119]
SWL21A	SWL91A	3-1/2"	4.00 [102]		5.12 [130]
SWL22A	SWL92A	4"	4.50 [114]		5.63 [143]
SWL24A	SWL93A	5"	5.56 [141]	1.62 [41]	6.16 [156]
SWL86A	SWL96A	6"	6.63 [168]		6.16 [156]

NOTES:
1. Dimensions in brackets [ ] are in millimeters.
2. Conductor smaller than 3 inch bus size not recommended for 550 kV.
3. For 45° angle ADD SUFFIX "45" to catalog number (example: SWL22A-45).

WELDED END PLUG

WLB-A

Weld type
Application : Bus to End Cap, used with shielded bus support/expansion couplers

EHV RATED : UP TO 550 kV when used with shielded bus and expansion connectors

Material: Cast 356 Aluminum Alloy

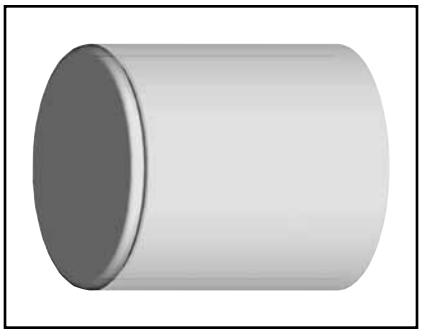

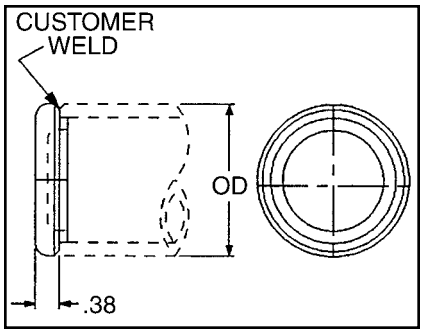

Catalog Number		O.D.	Conductor Aluminum Tubing Size
Sch. 40	Sch. 80		
WLB15A	WLB55A	1.32 [34]	1"
WLB16A	WLB56A	1.66 [42]	1-1/4"
WLB17A	WLB57A	1.90 [48]	1-1/2"
WLB18A	WLB58A	2.38 [60]	2"
WLB19A	WLB59A	2.88 [73]	2-1/2"
WLB20A	WLB90A	3.50 [89]	3"
WLB21A	WLB91A	4.00 [102]	3-1/2"
WLB22A	WLB92A	4.50 [114]	4"
WLB24A	WLB94A	5.56 [141]	5"
WLB86A	WLB96A	6.62 [168]	6"

NOTES:
1. Dimensions in brackets [ ] are in millimeters.
2. Conductor smaller than 3 inch bus size not recommended for 550 kV.

WELDED CORONA BELL

SCB-A

Weld type
Application: Bus to Corona Bell

EHV RATED: SELF-SHIELDING UP TO 550 kV

Material: Aluminum Alloy

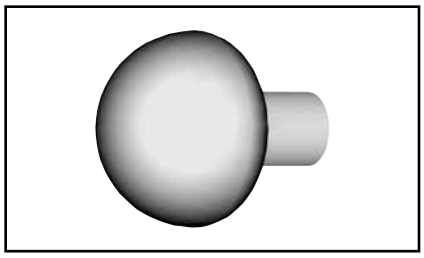

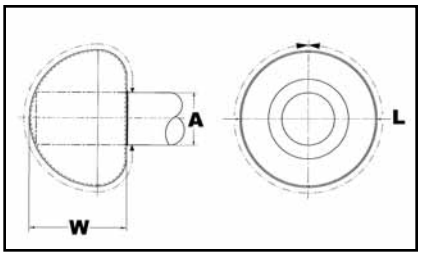

Catalog Number	Accommodates 'A' Dia. Aluminum Tube
SCB19A	2-1/2" (2.875 Dia.)
SCB20A	3" (3.500 Dia.)
SCB21A	3-1/2" (4.000 Dia.)
SCB22A	4" (4.500 Dia.)
SCB24A	5" (5.563 Dia.)
SCB86A	6" (6.625 Dia.)

NOTES:
1. For bolted design contact factory.
2. Dimensions in brackets [ ] are in millimeters.
3. Conductor smaller than 3 inch bus size not recommended for 550 kV.

Blue highlighted items are industry standard and most frequently ordered.

WELDED GROUND STUD

SWCB-A

Weld type
Application : Bus to corona sphere

EHV RATED : SELF-SHIELDING UP TO 550 kV

Material: Cast 356 Aluminum Alloy
Corona Sphere: Aluminum Alloy

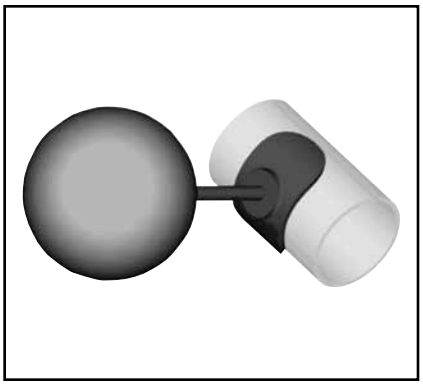

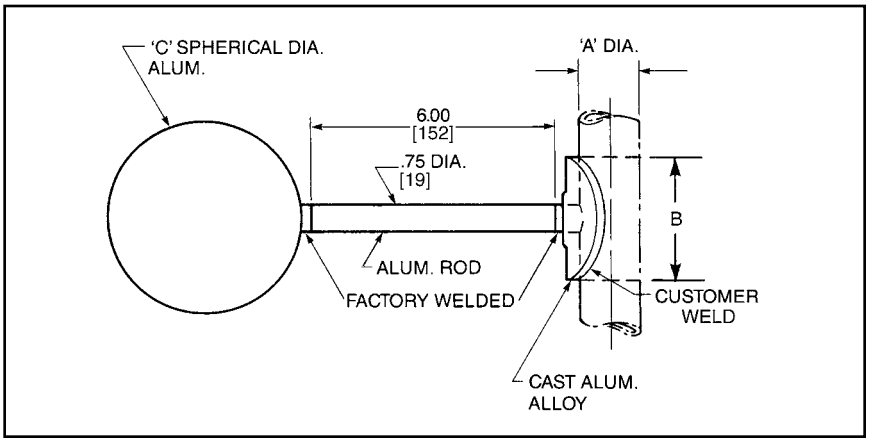

Catalog Number	'A' Dia. Aluminum Tube	'C' Dia.	B
SWCB19A	2-1/2" I.P.S. (2.875 Dia.) [73]	9.00 [229]	1.50 [38]
SWCB20A	3" I.P.S. (3.500 Dia.) [89]		3.00 [76]
SWCB22A	4" I.P.S (4.500 Dia.) [114]		4.00 [102]
SWCB24A	5" I.P.S (5.563 Dia.) [141]		
SWCB86A	6" I.P.S (6.625 Dia.) [168]		

NOTES:
1. Dimensions in brackets [ ] are in millimeters.
2. Conductor smaller than 3 inch bus size not recommended for 550 kV.

Blue highlighted items are industry standard and most frequently ordered.

US: 1-800-346-4175 www.burndy.com Canada: 1-800-387-6487

WELDED SPHERICAL COUPLER

WSBC-A

Weld type
Application : For Use on Alumininum
Pipe-to-Pipe Connections

EHV RATED : UP TO 500 kV
Aluminum Alloy streamlined, variable angle spherical coupler. Self-shielding at operating voltages up to 500 kV.

Material: Aluminum Alloy

Notes:
Welding to be done by customer.

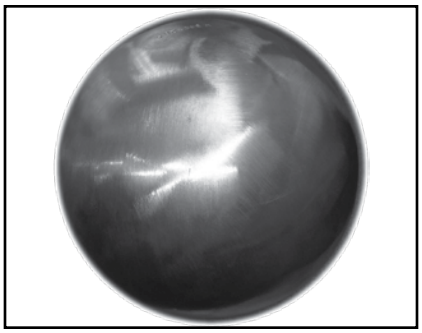

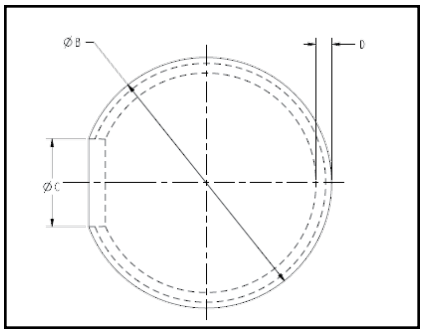

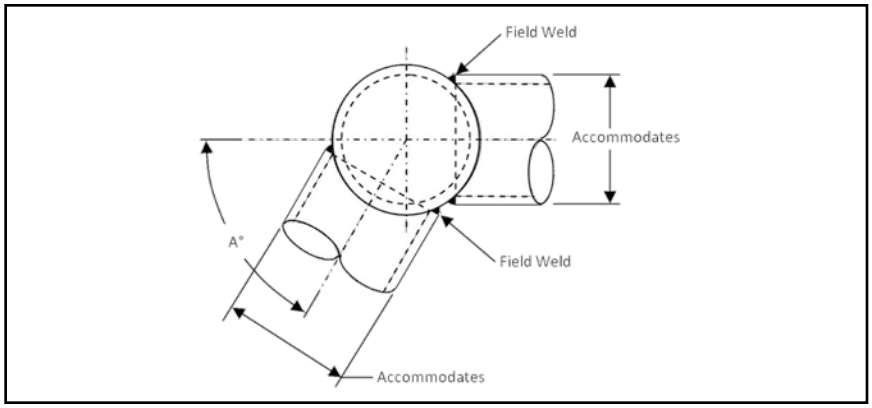

Catalog Number	Conductor Range	Max kV	A° Max	⦸ B	⦸ C	D
WSBC74A	1-1/2" SPS	230	130°	5.00 [127]	1.75 [44]	.31 [8]
	2" SPS		115°			
	2-1/2" SPS		105°			
	3" SPS		90°			
	3-1/2" SPS		80°			
	4" SPS		50°			
WSBC83A	3" SPS - 5" SPS	345	90°			
	6" SPS		60°	8.00 [203]	2.75 [70]	.44 [11]
	8" OD SPS		40°			
WSBC128A	3" SPS	500	140°			
	3-1/2" SPS		135°	12.00 [305]	2.75 [70]	.38 [10]
	4" SPS		130°			
	5" SPS		120°			
	6" SPS		100°			
	8" OD SPS		90°			

NOTES:
1. Dimensions in brackets [ ] are in millimeters.

TERMINAL PAD CAP (Two Piece)

STS-A-N

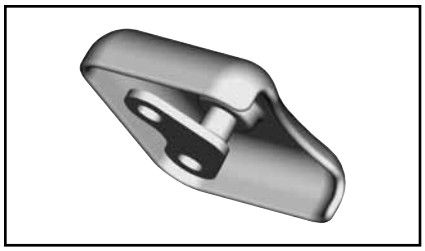

Bolted type
Application: Pad shielding

EHV RATED : SELF-SHIELDING UP TO 550 kV

Material: Cast 356 Aluminum Alloy
Hardware: 1/4"–20 x 3-3/4" LG Stainless Steel Hex Hd. Bolt and Split Lockwasher

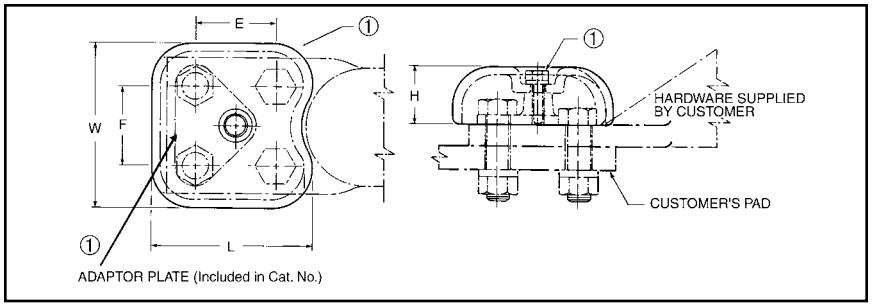

① Catalog Number	E	F	H	L	W	Maximum Shielded Area
STS33A-4N	1.75 [44]	1.75 [44]	1.25 [32]	3.48 [88]	3.62 [92]	3 X 3 [76] X [76]
STS43A-4N	1.75 [44]	1.75 [44]	1.31 [33]	3.36 [85]	4.50 [114]	4.00 X 3.12 [102 X 79]
STS44A-4N ②	1.75 [44]	1.75 [44]	1.25 [32]	4.50 [114]	4.62 [117]	4 X 4 [102 X 102]

① Catalog number includes one pad cap, one adapter plate, and stainless steel adaptor hardware.

② Used with YNA451R-T and YNA451R-T15 through YNA594R-T and YNA594R-T15 compression terminals.

TERMINAL PAD CAP (One Piece)

STS-A-NCG

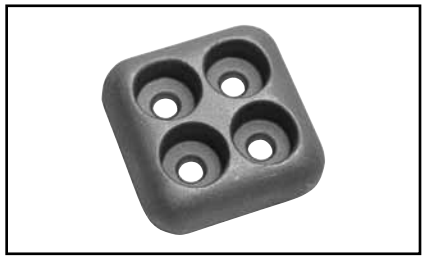

Bolted type
Application: Pad shielding

EHV RATED : SELF-SHIELDING UP TO 550 kV

Material: Cast 356 Aluminum Alloy

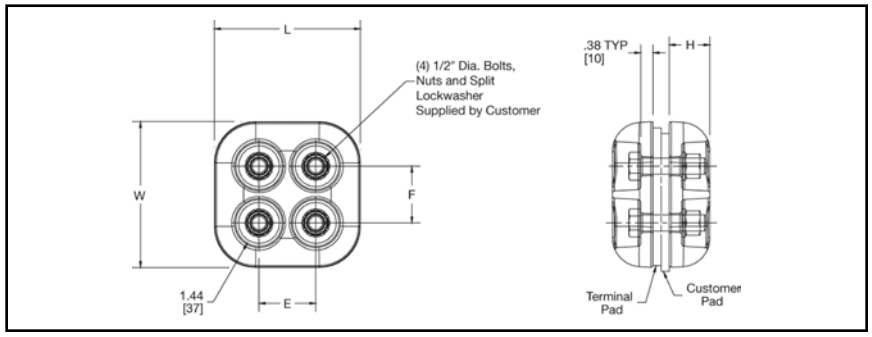

Catalog Number	E	F	H	L	W	Maximum Shielded Area
STS44A-4NCG2	1.75 [44]	1.75 [44]	1.25 [32]	4.50 [114]	4.50 [114]	4 x 4
STS46A6NCG1	1.75 [44]	1.75 [44]	1.25 [32]	4.50 [114]	6.50 [165]	6 x 4

NOTES:
1. Dimensions in brackets [ ] are in millimeters.
2. Catalog number is for one shielding cap only. If more than one is required, specifiy total quantity.

Blue highlighted items are industry standard and most frequently ordered.

BOLTED BUNDLED CABLE SPACER

S2GBP-A (Spacer)
S2GBPA-A (Terminal Tap)
SH2GBP-A (Bus Support)

Bolted type
Application: Cable to Cable spacer (Two Cables), Cable spacer with four hole pad, and Cable spacer to insulator.

EHV RATED: SELF-SHIELDING UP TO 550 kV

Material: Cast 356 Aluminum Alloy
Hardware: Aluminum Alloy

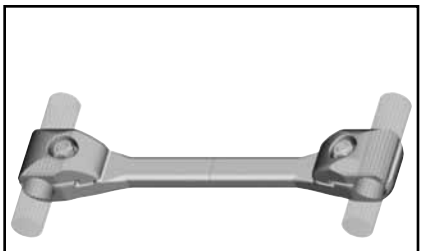

Fig. 1

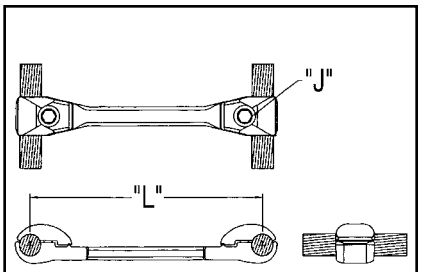

Fig. 1

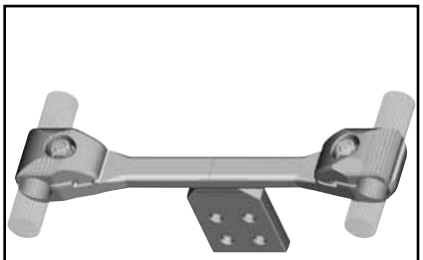

Fig. 2

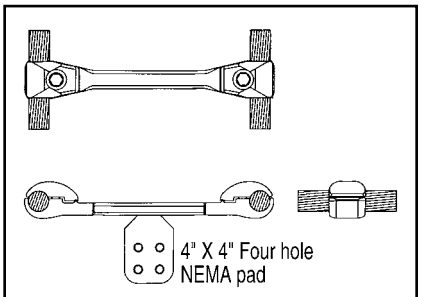

Fig. 2

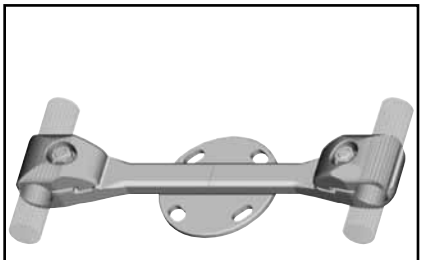

Fig. 3

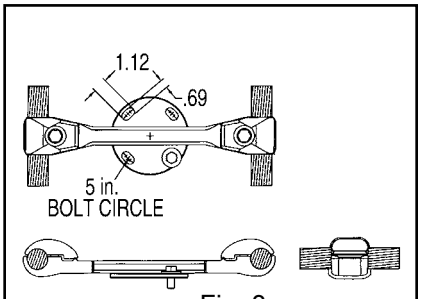

Fig. 3

Catalog Number			Cable Range		Cable Dia.		"L"	"J" Dia.
Fig. 1	Fig. 2	Fig. 3	AAC	ACSR	Min.	Max.		
S2GBP41A	S2GBPA41A	SH2GBP41A5	795 kcmil 37 Str. (1.026 Dia.) 874.5 kcmil 61 Str. (1.077 Dia.)	715 kcmil 24/7 Str. (1.036 Dia.) 715.5 kcmil 26/7 Str. (1.051 Dia.)	1.026 [26]	1.092 [28]	18.00 [457]	5/8"–11 X 1-3/4" LG. Alum. Alloy
S2GBP41A12	S2GBPA41A12	SH2GBP41A512					12.00 [305]	
S2GBP44A	S2GBPA44A	SH2GBP44A5	954 kcmil 61 Str. (1.126 Dia.)	795 kcmil 24/7 Str. (1.092 Dia.) 795 kcmil 54/7 Str. (1.093 Dia.)	1.092 [28]	1.165 [30]	18.00 [457]	5/8"–11 X 2" LG. Alum. Alloy
S2GBP44A12	S2GBPA44A12	SH2GBP44A512					12.00 [305]	
S2GBP445A	S2GBPA445A	SH2GBP445A5	1033.5 kcmil 37 Str. (1.170 Dia.) 1113 kcmil 61 Str. (1.216 Dia.)	954 kcmil 45/7 Str. (1.165 Dia.) 1033.5 kcmil 45/7 Str. (1.213 Dia.)	1.165 [30]	1.246 [32]	18.00 [457]	
S2GBP445A12	S2GBPA445A12	SH2GBP445A512					12.00 [305]	
S2GBP45A	S2GBPA45A	SH2GBP45A5	1192 kcmil 61 Str. (1.258 Dia.) 1272 kcmil 61 Str. (1.300 Dia.)	1033.5 kcmil 54/7 Str. (1.246 Dia.) 1192.5 kcmil 54/19 Str. (1.333 Dia.)	1.246 [32]	1.382 [35]	18.00 [457]	
S2GBP45A12	S2GBPA45A12	SH2GBP45A512					12.00 [305]	

NOTES:
1. Dimensions in brackets [ ] are in millimeters.
2. For stainless steel hardware add SUFFIX "SS" to catalog number (example: S2GBP41ASS).
3. For variations in cable spacing contact factory.
4. For pad rotated 90° on S2GBPA-A add suffix R90 to the catalog number (example: S2GBPA44AR90).
5. For Bolt Circles other than 5 inch on type SH2GBP-A contact factory.
6. S2GBPA-A connectors rated 550 kV when used with type "STS" Shielding Caps. Ordered separately.

Blue highlighted items are industry standard and most frequently ordered.

BOLTED BUNDLED CABLE SPACER
(Continued)

S2GBP-A (Spacer)
S2GBPA-A (Terminal Tap)
SH2GBP-A (Bus Support)

Catalog Number			Cable Range		Cable Dia.		"L"	"J" Dia.
Fig. 1	Fig. 2	Fig. 3	AAC	ACSR	Min.	Max.		
S2GBP46A	S2GBPA46A	SH2GBP46A5	1590 kcmil 61 Str. (1.453 Dia.) 1600 kcmil 127 Str. (1.454 Dia.)	1272 kcmil 54/19 Str. (1.382 Dia.) 1431 kcmil 54/19 Str. (1.465 Dia.)	1.382 [35]	1.504 [38]	18.00 [457]	5/8"–11 X 1-3/4" LG. Alum. Alloy
S2GBP46A12	S2GBPA46A12	SH2GBP46A512					12.00 [305]	
S2GBP48A	S2GBPA48A	SH2GBP48A5	1750 kcmil 127 Str. (1.526 Dia.) 2000 kcmil 91 Str. (1.630 Dia.)	1590 kcmil 45/7 Str. (1.502 Dia.) 1750 kcmil 84/19 Str. (1.602 Dia.)	1.504 [38]	1.632 [41]	18.00 [457]	5/8"–11 X 2" LG. Alum. Alloy
S2GBP48A12	S2GBPA48A12	SH2GBP48A512					12.00 [305]	
S2GBP483A	S2GBPA483A	SH2GBP483A5	2000 kcmil 91 Str. (1.630 Dia.) 2250 kcmil 91 Str. (1.729 Dia.)	1890 kcmil 84/19 Str. (1.650 Dia.) 2167 kcmil 72/7 Str. (1.737 Dia.)	1.632 [41]	1.737 [44]	18.00 [457]	
S2GBP483A12	S2GBPA483A12	SH2GBP483A512					12.00 [305]	
S2GBP486A	S2GBPA486A	SH2GBP486A5	2300 kcmil 61 Str. (1.750 Dia.) 2500 kcmil 127 Str. (1.823 Dia.)	2167 kcmil 72/7 Str. (1.737 Dia.) 2156 kcmil 84/19 Str. (1.762 Dia.)	1.737 [44]	1.824 [46]	18.00 [457]	
S2GBP486A12	S2GBPA486A12	SH2GBP486A512					12.00 [305]	

NOTES:
1. Dimensions in brackets [ ] are in millimeters.
2. For stainless steel hardware add SUFFIX "SS" to catalog number (example: S2GBP41ASS).
3. For variations in cable spacing contact factory.
4. For pad rotated 90° on S2GBPA-A add suffix R90 to the catalog number (example: S2GBPA44AR90).
5. For Bolt Circles other than 5 inch on type SH2GBP-A contact factory.
6. S2GBPA-A connectors rated 550 kV when used with type "STS" Shielding Caps. Ordered separately.

BOLTED BUNDLED CABLE SPACER (Two Bolt Clamping)

S2GBP-AB2 (Spacer)
S2GBPA-AB2 (Terminal Tap)
SH2GBP-A-B2 (Bus Support)

Bolted type
Application: Cable to Cable spacer (Two Cables), Cable spacer with four hole pad, and Cable spacer to insulator.

EHV RATED: SELF-SHIELDING UP TO 550 kV

Material: Cast 356 Aluminum Alloy
Hardware: Aluminum Alloy

Fig. 1

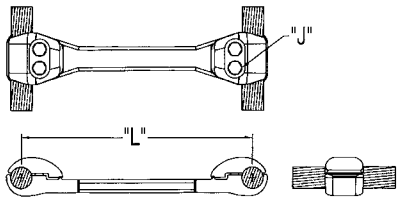

Fig. 1

Fig. 2

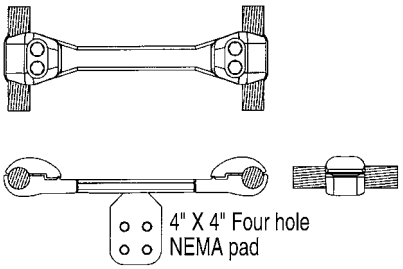

Fig. 2

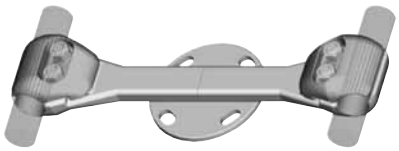

Fig. 3

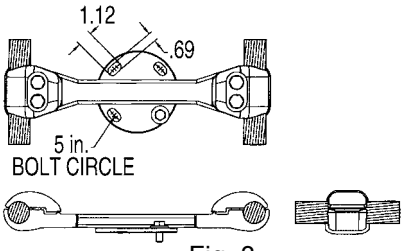

Fig. 3

Catalog Number			Cable Range		Cable Dia.		"L"	"J" Dia.
Fig. 1	Fig. 2	Fig. 3	AAC	ACSR	Min.	Max.		
S2GBP41AB2	S2GBPA41AB2	SH2GBP41A5B2	795 kcmil 37 Str. (1.026 Dia.) 874.5 kcmil 61 Str. (1.077 Dia.)	715 kcmil 24/7 Str. (1.036 Dia.) 715.5 kcmil 26/7 Str. (1.051 Dia.)	1.026 [26]	1.092 [28]	18.00 [457]	5/8"–11 X 1-1/2" LG. Alum. Alloy
S2GBP41A12B2	S2GBPA41A12B2	SH2GBP41A512B2					12.00 [305]	
S2GBP44AB2	S2GBPA44AB2	SH2GBP44A5B2	954 kcmil 61 Str. (1.126 Dia.)	795 kcmil 24/7 Str. (1.092 Dia.) 795 kcmil 54/7 Str. (1.093 Dia.)	1.092 [28]	1.165 [30]	18.00 [457]	5/8"–11 X 1-3/4" LG. Alum. Alloy
S2GBP44A12B2	S2GBPA44A12B2	SH2GBP44A512B2					12.00 [305]	
S2GBP445AB2	S2GBPA445AB2	SH2GBP445A5B2	1033.5 kcmil 37 Str. (1.170 Dia.) 1113 kcmil 61 Str. (1.216 Dia.)	954 kcmil 45/7 Str. (1.165 Dia.) 1033.5 kcmil 45/7 Str. (1.213 Dia.)	1.165 [30]	1.246 [32]	18.00 [457]	
S2GBP445A12B2	S2GBPA445A12B2	SH2GBP445A512B2					12.00 [305]	
S2GBP45AB2	S2GBPA45AB2	SH2GBP45A5B2	1192 kcmil 61 Str. (1.258 Dia.) 1272 kcmil 61 Str. (1.300 Dia.)	1033.5 kcmil 54/7 Str. (1.246 Dia.) 1192.5 kcmil 54/19 Str. (1.333 Dia.)	1.246 [32]	1.382 [35]	18.00 [457]	
S2GBP45A12B2	S2GBPA45A12B2	SH2GBP45A512B2					12.00 [305]	

NOTES:
1. Dimensions in brackets [ ] are in millimeters.
2. For stainless steel hardware add SUFFIX "SS" to catalog number (example: S2GBP41AB2SS).
3. For variations in cable spacing contact factory.
4. For pad rotated 90° on S2GBPA-AB2 add suffix R90 to the catalog number (example: S2GBPA44AB2R90).
5. For Bolt Circles other than 5 inch on type SH2GBP-A-B2 contact factory.
6. S2GBPA-B2 connectors rated 550 kV when used with type "STS" Shielding Caps. Ordered separately.

Blue highlighted items are industry standard and most frequently ordered.

BOLTED BUNDLED CABLE SPACER (Two Bolt Clamping)
(Continued)

S2GBP-AB2 (Spacer)
S2GBPA-AB2 (Terminal Tap)
SH2GBP-A-B2 (Bus Support)

Catalog Number			Cable Range		Cable Dia.		"L"	"J" Dia.
Fig. 1	Fig. 2	Fig. 3	AAC	ACSR	Min.	Max.		
S2GBP46AB2	S2GBPA46AB2	SH2GBP46A5B2	1590 kcmil 61 Str. (1.453 Dia.) 1600 kcmil 127 Str. (1.454 Dia.)	1272 kcmil 54/19 Str. (1.382 Dia.) 1431 kcmil 54/19 Str. (1.465 Dia.)	1.382 [35]	1.504 [38]	18.00 [457]	5/8"–11 X 1-3/4" LG. Alum. Alloy
S2GBP46A12B2	S2GBPA46A12B2	SH2GBP46A512B2					12.00 [305]	
S2GBP48AB2	S2GBPA48AB2	SH2GBP48A5B2	1750 kcmil 127 Str. (1.526 Dia.) 2000 kcmil 91 Str. (1.630 Dia.)	1590 kcmil 45/7 Str. (1.502 Dia.) 1750 kcmil 84/19 Str. (1.602 Dia.)	1.504 [38]	1.632 [41]	18.00 [457]	5/8"–11 X 2" LG. Alum. Alloy
S2GBP48A12B2	S2GBPA48A12B2	SH2GBP48A512B2					12.00 [305]	
S2GBP483AB2	S2GBPA483AB2	SH2GBP483A5B2	2000 kcmil 91 Str. (1.630 Dia.) 2250 kcmil 91 Str. (1.729 Dia.)	1890 kcmil 84/19 Str. (1.650 Dia.) 2167 kcmil 72/7 Str. (1.737 Dia.)	1.632 [41]	1.737 [44]	18.00 [457]	
S2GBP483A12B2	S2GBPA483A12B2	SH2GBP483A512B2					12.00 [305]	
S2GBP486AB2	S2GBPA486AB2	SH2GBP486A5B2	2300 kcmil 61 Str. (1.750 Dia.) 2500 kcmil 127 Str. (1.823 Dia.)	2167 kcmil 72/7 Str. (1.737 Dia.) 2156 kcmil 84/19 Str. (1.762 Dia.)	1.737 [44]	1.824 [46]	18.00 [457]	
S2GBP486A12B2	S2GBPA486A12B2	SH2GBP486A512B2					12.00 [305]	

NOTES:
1. Dimensions in brackets [ ] are in millimeters.
2. For stainless steel hardware add SUFFIX "SS" to catalog number (example: S2GBP41AB2SS).
3. For variations in cable spacing contact factory.
4. For pad rotated 90° on S2GBPA-AB2 add suffix R90 to the catalog number (example: S2GBPA44AB2R90).
5. For Bolt Circles other than 5 inch on type SH2GBP-A-B2 contact factory.
6. S2GBPA-B2 connectors rated 550 kV when used with type "STS" Shielding Caps. Ordered separately.

Blue highlighted items are industry standard and most frequently ordered.

US: 1-800-346-4175 **www.burndy.com** **Canada: 1-800-387-6487**

BOLTED BUNDLED CABLE SPACER (Three Conductor)

S3GBP-A

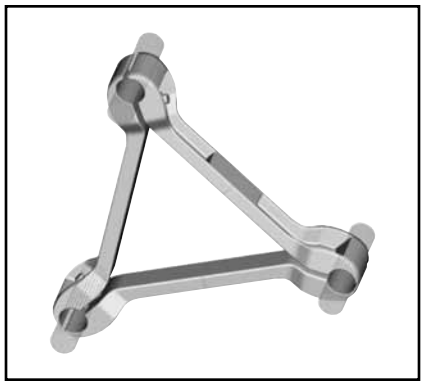

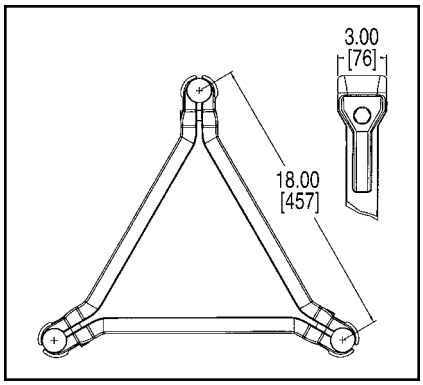

Bolted type
Application: Cable to Cable Spacer
(three cables)

EHV RATED: SELF-SHIELDING UP TO 550 kV

Material: Cast 356 Aluminum Alloy
Hardware: Aluminum Alloy

Catalog Number	Cable Range		Cable Dia.		"J" Dia.
	AAC	ACSR	Min.	Max.	
S3GBP41A	795 kcmil 37 Str. (1.036 Dia.) 874.5 kcmil 61 Str. (1.077 Dia)	715 kcmil 24/7 Str. (1.036 Dia.) 715.5 kcmil 26/7 Str. (1.051 Dia.)	1.026 [26]	1.092 [28]	5/8'-11 x 1-1/2" LG. Alum. Alloy
S3GBP44A	954 kcmil 61 Str. (1.126 Dia.)	795 kcmil 24/7 Str. (1.092 Dia.) 795 kcmil 54/7 Str. (1.093 Dia.)	1.092 [28]	1.165 [30]	5/8'-11 x 1-3/4" LG. Alum. Alloy
S3GBP445A	1033.5 kciml 37 Str. (1.170 Dia.) 1113 kcmil 61 Str. (1.216 Dia.)	954 kcmil 45/7 Str. (1.165 Dia.) 1033.5 kcmil 45/7 Str. (1.213 Dia.)	1.165 [30]	1.246 [32]	
S3GBP45A	1192 kcmil 61 Str. (1.258 Dia.) 1272 kcmil 61 Str. (1.300 Dia.)	1033.5 kcmil 54/7 Str. (1.246 Dia.) 1192.5 kcmil 54/19 Str. (1.333 Dia.)	1.246 [32]	1.382 [35]	
S3GBP46A	1590 kcmil 61 Str. (1.453 Dia.) 1600 kcmil 127 Str. (1.454 Dia.)	1272 kcmil 54/19 Str. (1.382 Dia.) 1431 kcimil 54/19 Str. (1.465 Dia.)	1.382 [35]	1.504 [38]	
S3GBP48A	1750 kcmil 127 Str. (1.526 Dia.) 2000 kcmil 91 Str. (1.630 Dia.)	1590 kmcil 47/7 Str. (1.502 Dia.) 1750 kcmil 84/19 Str. (1.602 Dia.)	1.504 [38]	1.632 [41]	"5/8'-11 x 2" LG. Alum. Alloy"
S3GBP483A	2000 kmcil 91 Str. (1.630 Dia.) 2250 kcmil 91 Str. (1.729 Dia.)	1890 kcmil 84/19 Str. (1.650 Dia.) 2167 kcmil 72/7 Str. (1.737 Dia.)	1.632 [41]	1.737 [44]	
S3GBP486A	2300 kcmil 61 Str. (1.750 Dia.) 2500 kcmil 127 Str. (1.823 Dia.)	2167 kcmil 72/7 Str. (1.737 Dia.) 2156 kcmil 84/19 Str. (1.762 Dia.)	1.737 [44]	1.824 [46]	

NOTES:
1. Dimensions in brackets [ ] are in millimeters.
2. For stainless steel hardware add SUFFIX "SS" to catalog number (example: S3GBP48ASS).
3. For variations in cable spacing contact factory.
4. For four hole straight pad tap or 90° version or bus support three bundled cable spacer, contact the factory.

BIFURCATING TERMINAL CONNECTOR

SF2A-NL-EX

Bolted type
Application: Four to Six Hole
NEMA Pad to Two
Four Hole NEMA
Recessed Pads

Bifurcating Terminal

EHV RATED: SELF-SHIELDING UP TO 550 kV

Material: Cast 356 Aluminum Alloy

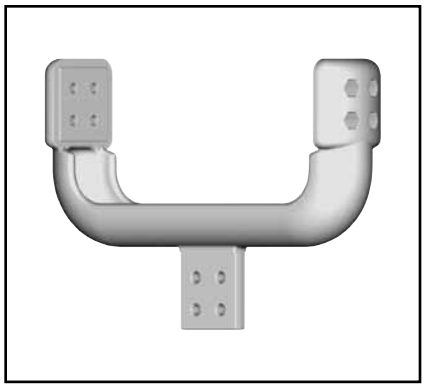

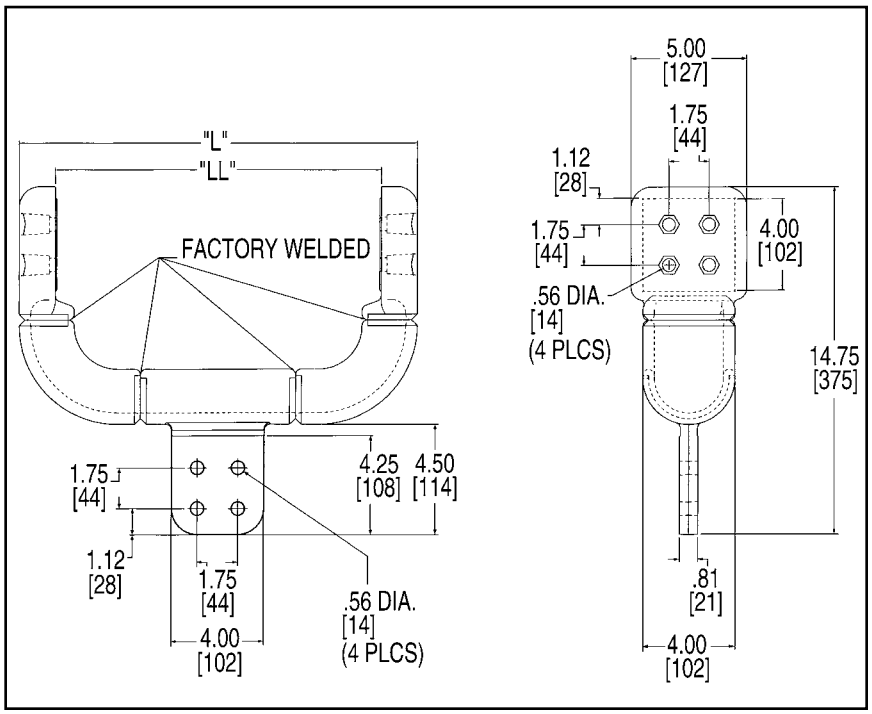

Catalog Number	"L"	"LL"
SF2A44NL12EX	17.21 [437]	13.97 [355]
SF2A44NL18EX	21.51 [546]	18.27 [464]

NOTES:
1. Dimensions in brackets [ ] are in millimeters.
2. One surface of pad finished. For finished pad on both sides add SUFFIX "Q" to the catalog number (example: SF2A44NL12EXQ).
3. Shielding caps are not required when terminals are installed within the recessed Housing. Hardware ordered separately.
4. Shielding caps are required when installing to center (non recessed) four hole NEMA Pad. Reference STS type shielding caps. Sold separately.
5. For six hole NEMA pad add "66" to catalog number (example: SF2A66NL12EX).

TRIFURCATING COUPLER CONNECTOR

SW3A-A44N8

Weld type
Application: Bus to Trifurcating Terminals

EHV RATED: SELF-SHIELDING UP TO 550 kV

Material: Cast 356 Aluminum Alloy

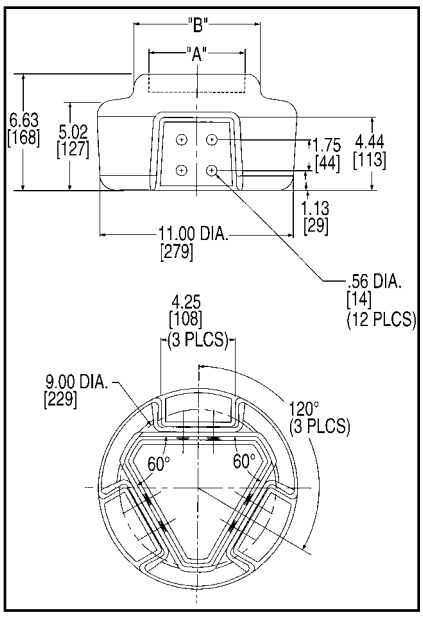

Catalog Number	Accommodates		
	Alum. Tubing Size	"A" Dia.	"B" Dia.
SW3A20A44N8	3″ [76]	3.56 [90]	5.06 [129]
SW3A22A44N8	4″ [101]	4.57 [116]	6.09 [155]
SW3A24A44N8	5″ [127]	5.65 [144]	7.16 [182]
SW3A86A44N8	6″ [152]	6.72 [171]	8.00 [203]

NOTES:
1. Dimensions in brackets [ ] are in millimeters.
2. Shielding caps are not required when terminals are installed within the recessed housing. Hardware ordered separately.

TRIFURCATING TEE CONNECTOR

SW3AB-A44N8

Weld type
Application: Bus to Trifurcating Terminals

EHV RATED: SELF-SHIELDING UP TO 550 kV

Material: Cast 356 Aluminum Alloy

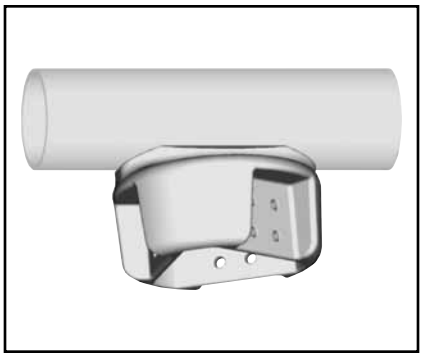

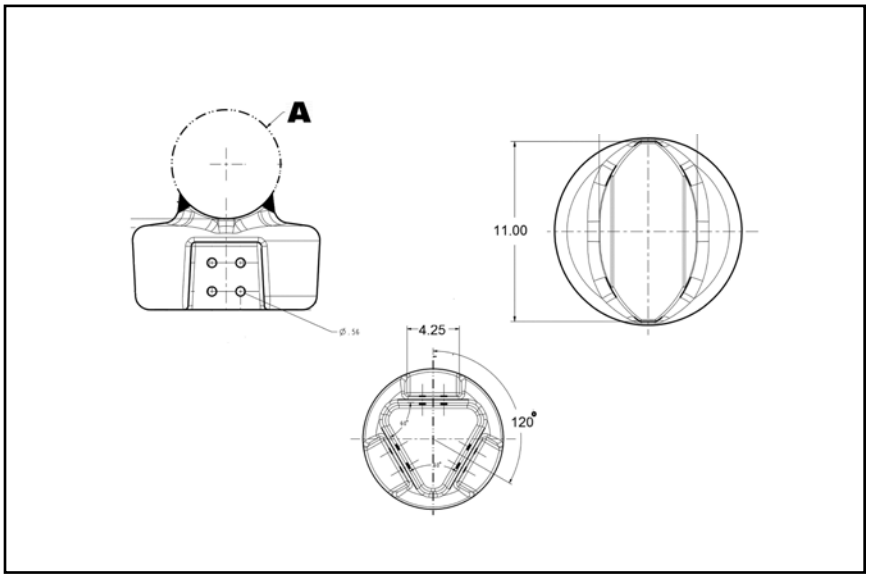

Catalog Number	Accommodates	
	Alum. Tubing Size	"A" Dia.
SW3AB20A44N8	3" [76]	3.50 [89]
SW3AB22A44N8	4" [101]	4.50 [114]
SW3AB24A44N8	5" [127]	5.56 [141]
SW3AB86A44N8	6" [152]	6.62 [168]

NOTES:
1. Dimensions in brackets [ ] are in millimeters.
2. Shielding caps are not required when terminals are installed within the recessed housing. Hardware ordered separately.

TABLE OF CONTENTS

INTRODUCTION N-4

DIES
12 Ton U Dies N-5
W Dies N-6
U Die Kits N-7

GAUGES
Force Test Gauge N-8

CRIMPERS
BATTERY ACTUATED
PAT46-LI N-9
PAT46-18V N-10
PAT46LW-LI, PAT46LW-18V N-11
PAT750-LI N-12
PAT750XT-18V N-13
PAT750K-LI, PAT750K-18V N-14
PAT644-LI N-15
PAT644XT-18V N-16
PAT81KFT-LI N-17
PAT81KFT-18V N-18
PAT4PC834-LI N-19
PAT4PC834-18V N-20
PAT600-LI N-21
PAT600-18V N-22
PATMD6-LI Series N-23
PATMD6-14V Series N-24

SELF-CONTAINED HYDRAULIC
Y750HSXT, Y750CHSXT N-25
Y35, Y35-2 N-26
Y35 Series Accessories N-27
Y39 N-28
Y644HSXT N-29
Y81KFT N-30
Y4PC834 N-31
Y500CT-HS N-32

REMOTE HYDRAULIC
Y60BHU N-33
Y60LW N-34
Y46, Y46C N-35
Y45 N-36
Y750BHXT, Y750CBHXT N-37
Y35BH N-38
Y39BH N-39
Y644MBH N-40
Y81KFTMBH N-41
Y4PC834MBH N-42
Y34BH N-43
Y29BH N-44

MECHANICAL AND RATCHET
Y10D N-45
Y10-22 N-46
YF22-10FL N-47
YF-TOOL N-48
Y8MRB-1 N-49
MR8 N-50
MRE10-22B, MRE10-22NV N-51
MR15, MR18, MR20 N-52
MR4C N-53
Y10MRSA1 N-54
Y122CMR N-55
Y1MRTC N-56
M8ND N-57
MRC840, MRC840AL N-58
MY28, MY29 Series N-59
OH25 N-60
OUR840 N-61
MD6-8 N-62
MD7 N-63
MD7-34R N-64
MD6 Hotstick Tools N-65
MD6, MD7 Accessories N-66
WIREMIKE N-67

TABLE OF CONTENTS

OEM - PNEUMATIC
Y6NCP1, Y6NCP1SD N-68
Y29NC N-69

RATCHET TORQUE TOOL
Micro-Adjustable "Click-Type" N-70

CUTTERS
BATTERY ACTUATED
PATHCC10-18V N-71
PATCUT129-LI N-72
PATCUT129ACSR-18V N-73
PATCUT245-LI N-74
PATCUT245CUAL-18V N-75
PATCUT2156-LI N-76
PATCUT2156-18V N-77
PATMDCUT Series N-78
IN-LINE® Pole Cutters N-79
BCC1000CUAL N-80

SELF-CONTAINED HYDRAULIC
YCUT129ACSR N-81

REMOTE HYDRAULIC
RHCC10, RHCC10C N-82
RHCC129ACSR N-83
RHCC245CUAL N-84

MECHANICAL AND RATCHET
MCC600, MCC1000 N-85
RCC Series N-86
RWRC516, RWRC916 N-87

HYDRAULIC PUMPS
HP10, HP8, HP6 N-88
FP10, FP8, FP6 N-89
Y10AC9 N-90
EPP10, EPP6 N-91
EPAC10, EPAC8, EPAC6 N-92
EP10, EP10-2, EP8, EP6 N-93
EP10-1HP, EP10-1HP-2 N-94
GP10 N-95
Hydraulic Hoses N-96
Accessories N-97

LOW PRESSURE HYDRAULIC
IMPACT WRENCHES
ENFORCER® HIW716ENF N-98
HIW716MAG N-99
Auger Bits N-100, N-101

REMOTE 12 Ton LPHT Tool
LPHY750XT, LPHY750CXT N-102

HYDRAULIC BREAKERS
HBR40, HBR66 N-103

SUBMERSIBLE PUMPS
HTP3, HP3, HP2HV N-104

POLE TAMPERS
HPT-R1 Series Pole Tampers N-105

CHAIN SAWS
HHS Series Hand Chain Saws N-106
HPS Series Pole Chain Saws N-106
HPS-LW Series Pole Chain Saws N-107

TABLE OF CONTENTS

HYDRAULIC POWER PACKS
HPP18, HPP18-2, HPP5 N-108

LPHT ACCESSORIES N-109

KNOCKOUT SETS
MECHANICAL AND RATCHET
BKOM50125 N-110
BKOM152 N-111
BKOH2540 N-112
BKOW520 N-113
BKOR520 N-114

HYDRAULIC
BKOS5290 N-115
BKOS520 N-116
BKOH520A N-117
BKOH540A N-118
BKOF540 N-119

BENDERS
HAND BENDERS
B12E, B34E12R, B1E34R N-120

ELECTRIC BENDERS
BEB122 N-121

WIRE MANAGEMENT
The SmartCart®
BSC2H N-122
BSC2L N-123
BSCWS40, BSCW80 N-124

INTRODUCTION

INSTALLATION TOOLS

The BURNDY® Engineered System features the most complete line of installation tools in the electrical industry. Available in various styles: battery actuated, mechanical, full cycle ratchet, self contained hydraulic, remote controlled hydraulic, along with power actuated pumps, hoses and accessories, BURNDY has the options to suit your needs. BURNDY tools are designed to integrate with the complete line of BURNDY connectors. Whether you're a small contractor working with #22 wire or a large utility working with 2500 kcmil conductor, there is a BURNDY tool available to do the job.

The benefits of the BURNDY® Engineered System are many, however, probably the most significant benefit is reliability. There is nothing more important to the electrical industry today than reliability. It represents the one area that leads to economical installations that will endure for the life of the installation.

TOOL CENTER

An important element of the BURNDY® Engineered System is the BURNDY Tool Center, located at 150 Burndy Road, Littleton, NH 03561 (800-426-8720). This center provides advice and information on the operation, maintenance and repair of BURNDY tools. The repair center is staffed with specialized technicians who provide the best possible service for all BURNDY tools, pumps and accessories.

BURNDY designed and produced the first self contained hydraulic compression electrical connector installation tool in 1934. In our continuing efforts to provide the highest quality and highest value connection systems, we offer the current BURNDY tool policy.

LIMITED WARRANTY

The full line of BURNDY tools are warranted to be free of defects in materials and workmanship for a period of five (5) years from the date of shipment. If inspection by a certified tool technician shows the trouble is caused by defective workmanship or material, BURNDY will repair or (at our option) replace the tool.

This Warranty does not apply where:

- Repairs or alterations have been made or attempted by others
- Repairs are required because of normal wear and tear
- The tool has been abused, misused or improperly maintained
- The use of any non-BURNDY product has resulted in damage to the tool

STANDARD LIMITED WARRANTY AND LIMITATION OF LIABILITY

BURNDY warrants that the goods and services stated on the face hereof, when furnished to the Buyer by BURNDY, conform with the current written specifications and drawings (or with those of the Buyer specifically accepted by BURNDY in writing), and will be free of defects in materials and workmanship. The sole obligation of BURNDY (and Buyer's sole and exclusive remedy) for any breach of warranty under the foregoing warranty shall be to repair (at location designated by BURNDY) or, at the option of BURNDY: To replace FOB the original point of delivery any goods which are non-conforming or defective and are so specified by Buyer in a written certified mail notice to an officer of BURNDY within the applicable warranty period. BURNDY expressly disclaims any and all express or implied warranties other than the warranty of its title to goods and the warranty hereinabove set forth. Such disclaimer includes, without limitation, warranty of fitness for a particular purpose and warranty of merchantable quality.

Limitation of Liability: BURNDY will not, under any circumstances, be liable for the cost of removal or reinstallation of goods or the cost of disassembly or reassembly of equipment in connection therewith, or for loss of the use of Buyer's equipment or facilities, or for loss of business or goodwill or profits, or for cost of inspection or storage, or for any incidental or consequential damages of any nature or description whatever which may arise from the sale of BURNDY goods to Buyer.

REPAIR POLICY

All non-warranty repaired tools are completely reconditioned and receive a limited 1-year warranty. Non-warranty repair returns tools to like new condition at a maximum cost of 40% of a new tool. A nominal service charge of $5.00 is applied to all repairs to cover shop supplies, oil disposal and other miscellaneous services not covered as part of the standard repair.

If the decision is made not to repair, a handling charge of $25.00 will be applied plus return freight costs.

RETURN PROCEDURE

All tools sent to the BURNDY Tool Center or an authorized repair center must be accompanied by a purchase order with detailed bill to and ship to address authorizing repair. Requests for repair charges before work is done must be stated on the purchase order. All tools sent to the BURNDY Tool Center or an authorized repair center as a warranty claim must be accompanied by a proof of purchase such as a BURNDY invoive or invoice from any BURNDY distributor.

All tools must be shipped at the owner's expense, prepaid. BURNDY pays for the return freight, same surface freight as received. Airfreight returns will be returned same way collect for non-warranty repair and prepaid for warranty repairs.

This warranty and repair policy supercedes all previous policies and is in effect as of January 1, 2005.

12-TON U DIES*

BURNDY® Die Sets

Fits Y35, Y39, Y750 Series,
PAT750 Series,
PAT46 Series
(with PUADP-1 Adapter)

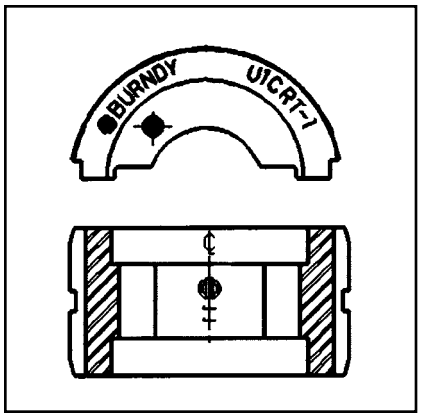

U die case Part# PT29291, holds up to 15 U dies or U-Wide die sets.

Wire Size	Copper	Copper Wide Die**	Aluminum
#8 AWG	U8CRT	U8CRTW	U8CABT
#6 AWG	U5CRT	U5CRTW	U6CABT
#4 AWG	U4CRT	U4CRTW	U4CABT
#3 AWG	U3CRT	U3CRTW	N/A
#2 AWG	U2CRT	U2CRTW	U2CABT
#1 AWG	U1CRT-1	U1CRT-1W	U1CART
1/0 AWG	U25RT	U25RTW	U25ART
2/0 AWG	U26RT	U26RTW	U26ART
3/0 AWG	U27RT	U27RTW	U27ART
4/0 AWG	U28RT	U28RTW	U28ART
250 kcmil	U29RT	N/A	U29ART
300 kcmil	U30RT		U30ART
350 kcmil	U31RT		U31ART
400 kcmil	U32RT		U32ART
500 kcmil	U34RT		U34ART
535 Flex kcmil	U38XRT		N/A
600 kcmil	U36RT		U36ART
750 kcmil	U39RT		U39ART-2
777 Flex	U44XRT		N/A

* Non-tension U-type 12 ton dies for YA, YS, YA-A, YS-A style connectors.
** Wide dies are intended for use on long barrel terminals and splices (YA / YS) only.
NOTE: N/A = not applicable.

W DIES

BURNDY® Die Sets

Fits Tools MD6, MD7, Y500CTHS, PAT600 Series, PATMD6 Series

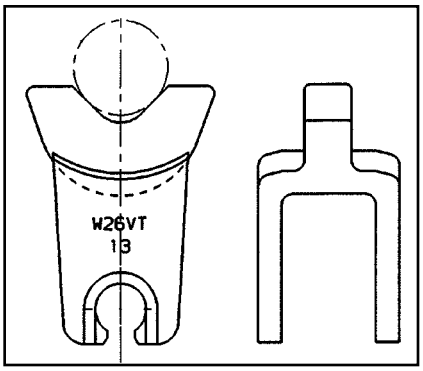

W die case Part# CASEWDIES, holds up to 24 dies

Wire Size	Copper	Copper	Aluminum
Small #8	W8CVT	W8CRT	X8CART
#6	W5CVT	W5CRT	W161
#4	W4CVT	W4CRT	W162
#3	W3CVT	W3CRT	N/A
#2	W2CVT	W2CRT	W239
#1	W1CVT	W1CRT-1	W163
1/0	W25VT	W25RT	W241
2/0	W26VT	W26RT	W245
3/0	W27VT	W27RT	W166
4/0	W28VT	W28RT	W660
250	*W29VT	W29RT	W249
300	*W30VT	W30RT	N/A
350	*W31VT	W31RT	*W31ART
400	*W32VT	W32RT	N/A
450	W33VT	W33RT	N/A
500	*W34VT	W34RT	N/A
Large 600	**W36RT	W36RT	N/A

* These sizes (250-500) for Y5000CTHS, MD7-34(R), BAT500, BCT500HS only.
** For PAT600-18V only.
NOTE: N/A = not applicable.
Suitable for use on YA, YS, YA-A, YS-A type non-tension connectors.

UDIEKITCU, UDIEKITCUW, UDIEKITAL, UDIEKITHYGRD

BURNDY® U DIE KITS

The UDIEKITCU and UDIEKITAL die kit includes 15 sets of "U" dies, type U-RT and U-ART respectively, and the PT29291 die case. These stainless steel color coded dies are for crimping BURNDY® YA, YS, YA-A and YS-A type HYLUG™ color coded terminals and splices ranging from #6 AWG through 750 kcmil.

The UDIEKITCUW includes 9 sets of wide stainless steel, color coded "U" dies are for crimping BURNDY® long barrel YA type HYLUG™ and YS type HYLINK™ color coded terminals and splices ranging from #8 AWG through 4/0 AWG. The wide "U"dies require only one crimp compared to two crimps when using standard width dies on long barrel YA type terminals and YS type splices up to 4/0 AWG.

The UDIEKITHYGRD kit includes 8 die sets. Seven dies sets are used to install the BURNDY® HYGROUND® irreversible compression grounding connectors, and the U2CABT die set for pre-crimping 1/2", 5/8" and 3/4" ground rods for increased rotational resistance.

BURNDY® "U" dies are used in the Y35, Y39, Y750 series, PAT750-18V series, Y46 and PAT46-18V (with PUDAP-1 adapter) tools.

UDIEKITHYGRD Includes
Catalog Number
UC
UO
U997
PU998
U1011
U1104
U1105
U2CABT (Ground rod pre-crimp die)
PT29291 (Die case)

Wire Size	UDIEKITCU Includes	UDIEKITCUW Includes	UDIEKITAL Includes
#8 AWG	not in kit	U8CRTW	not in kit
#6 AWG	U5CRT	U5CRTW	U6CABT
#4 AWG	U4CRT	U4CRTW	U4CABT
#2 AWG	U2CRT	U2CRTW	U2CABT
#1 AWG	U1CRT-1	U1CRT-1W	U1CART
1/0 AWG	U25RT	U25RTW	U25ART
2/0 AWG	U26RT	U26RTW	U26ART
3/0 AWG	U27RT	U27RTW	U27ART
4/0 AWG	U28RT	U28RTW	U28ART
250 kcmil	U29RT	N/A	U29ART
300 kcmil	U30RT		U30ART
350 kcmil	U31RT		U31ART
400 kcmil	U32RT		U32ART
500 kcmil	U34RT		U34ART
600 kcmil	U36RT		U36ART
750 kcmil	U39RT		U39ART-2
Die Case	PT29291	PT29291	PT29291

FORCEGAUGE12-15

Force Test Gauge

The BURNDY® FORCEGAUGE12-15 is a force gauge designed to assure users that their BURNDY® tool is supplying sufficient force to crimp connectors properly. This force gauge is a precision, self-contained load cell which converts the tool's output force into a pointer motion on a calibrated dial. The calibrated dial has two different green ranges that make it easy to identify the correct output force for either a 12 ton or 15 ton output force BURNDY tool. The gauge is designed to work specifically on the BURNDY® PATRIOT® PAT46 and PAT750 family as well as the Y750 and Y35 self-contained family of tools. For remote head tools, BURNDY® recommends the use of our inline pressure gauge, PT11018.

The FORCEGAUGE12-15 includes two blank "U" dies, force test gauge, Safety Operating and Maintenance Instructions (SOMI) and a high impact molded carry case. The gauge comes with a 1-year limited warranty.

Features and Benefits

- Custom "U" die blanks with detent
  - ◊ Provides secure aligned fit into the force gauge
- Accommodates 12 ton or 15 ton tools
  - ◊ Just one gauge can accommodate a larger family of tools
- Custom Carry Case
  - ◊ Protects the gauge, "U" die blanks and SOMI in a durable, compact polymer based case

Specifications

Gauge

Length:	8.3"
Width:	4.3"
Height:	1.5"
Weight:	2.7 lbs

Kit

Weight:	4.5 lbs

For Use On

The following series of tools: PAT46*, PAT750, Y750 and Y35

* The BURNDY® PUADP-1 adaptor will be required to accommodate the "U" die blanks in the 15 ton PAT46 tool.

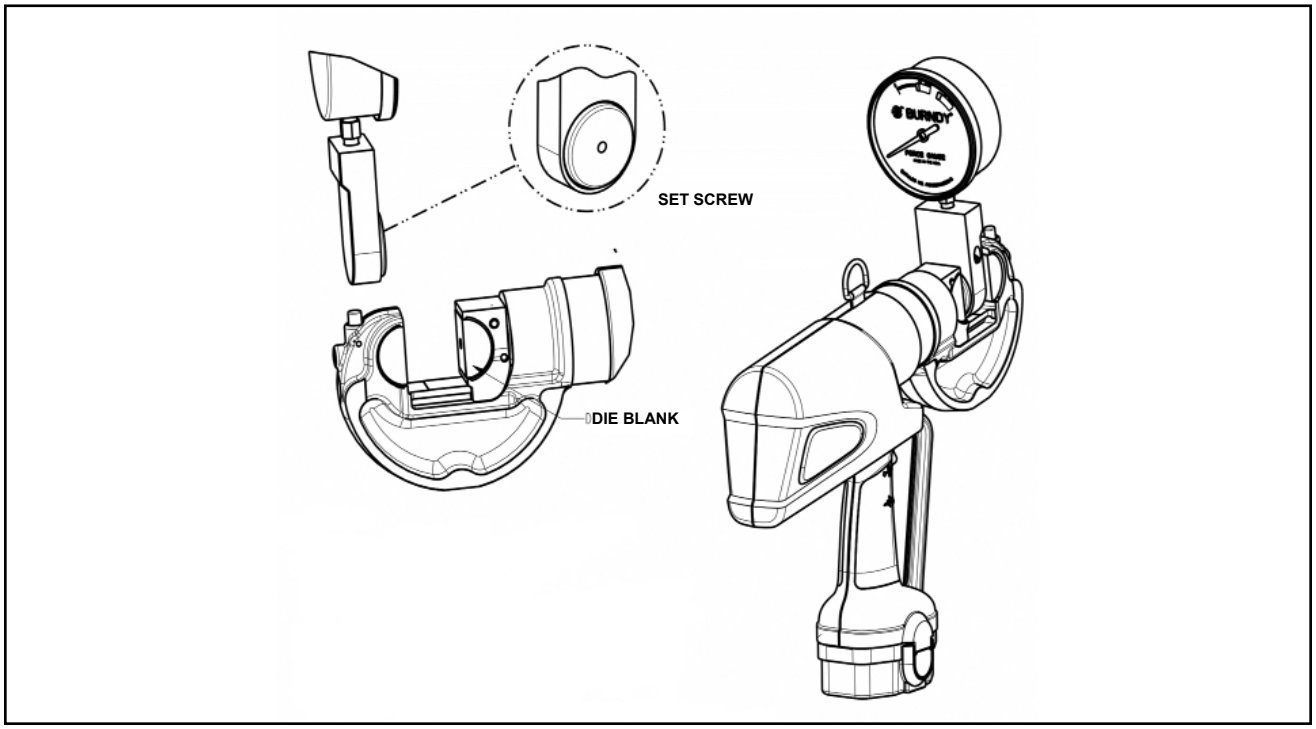

PATRIOT® PAT46-LI

18 Volt Lithium-Ion Battery Actuated Tool

Hydraulic Self-Contained 15-Ton Crimping Tool

The BURNDY® PATRIOT® PAT46-LI Lithium-Ion tool incorporates the latest engineering technology with a patented high speed hydraulic pump. The redesigned field proven electronics provides the ultimate reliability in the harshest work environments. BURNDY® battery actuated hydraulic tools provide a consistent, reliable connection every time. The PAT46-LI features the BURNDY® Y46 tool head, capable of using all "P" and "U" style dies.

Each PATRIOT® tool uses standard BURNDY® dies and off-the-shelf connectors available worldwide. Supplied with a durable high impact formed carrying case to hold the tool, battery charger, two 18V Lithium-Ion batteries, tool retention lanyard and die compartments to hold both "P" and "U" die sets (dies sold separately). All BURNDY® PATRIOT® tools are provided with a 5-year limited warranty. All PATRIOT® tools feature the BURNDY® INFINITY DRIVE® transmission which has a lifetime warranty.

PAT46C-LI — with rubber covered head is available.

Features and Benefits

- The largest BURNDY® battery actuated crimp tool, providing 15-tons of output force with a 2" jaw opening
  - ◊ Allows users to install the largest variety of splices, taps and terminals with one tool. Also provides easy placement and removal from continuous conductor lengths

- Redesigned field proven electronics
  - ◊ Provides the ultimate reliability in the harshest work environments
- Overmolded ergonomic handle
  - ◊ For comfort and improved grip; allows for one handed operation for advance, retract and hold
- 18-volt (3.0 AH) Li-Ion batteries
  - ◊ Batteries provide 2.5 times more charge/discharge cycles than traditional Ni-Cd batteries and 430% more lifetime work
  - ◊ Less "down-time" due to high capacity (3.0 AH), 18 volt Li-Ion battery
  - ◊ No voltage depression (memory issues)
- 30-minute smart charger
  - ◊ Controls current, voltage and temperature to maximize battery life
  - ◊ Forced air cooling fan cools the battery by forcing cool air through the battery's built-in air vents
- State of the art C-Head crimp design with 355° head rotation
  - ◊ Versatile tool head positioning lets user get into tight areas easier
- Retractable assist handle under head of tool for better handling of tool
  - ◊ Allows for better balance of tool and retractable for getting head into tight areas
- Durable high impact formed carrying case
  - ◊ Provides superior protection and stores all accessories
- 1-year warranty on batteries and charger

Features

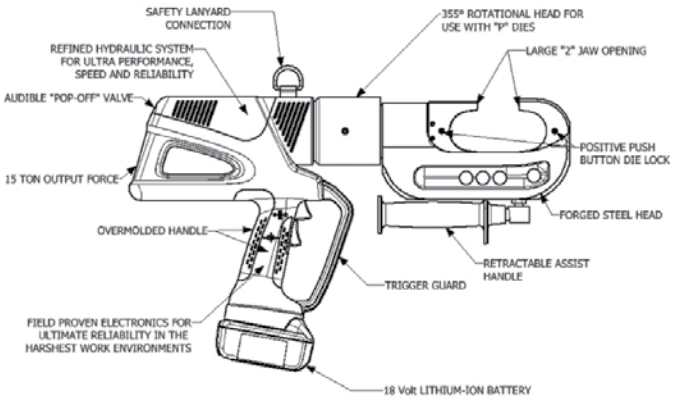

SPECIFICATIONS

Output Force:	15 tons (13.6 metric tons)
Total Weight:	25.5 lbs. (11.88 kg)
Length:	20.77" (52.76 cm)
Height:	14.43" (36.65 cm)
Width:	3.70" (9.40 cm)
Operating Voltage:	18 V-DC
Recharge Time:	30 minutes

FOR USE ON

Connector Type	Conductor Range
Copper #8 AWG str. 1500 kcmil Code Cable, Navy Cable, Flexible and Extra Flexible 1/2" - 1" Ground Rods	**Terminals, grounding**: to 500 kcmil YGA, YGHA, YGF **Terminals, uninsulated**: #8 to 1500 kcmil: YA, YA-2N, YA-L, YA-LB, YA-TC, YA-2LN, YAB-4N, YAV-L Box, YAV-L, YAV-RS Box, YAV-RS, YA-TC-FX **Terminals, insulated:** #8 to 2/0 YAEV-L Box, YAEV-L, YAEV-H, YAEV-RS, YAEV-RH **Splices:** #8 to 1500 kcmil YS, YS-T, YS-L, YS-LB, YST, YSP-T, YGS, YGHS **Taps:** #14 to 1000 kcmil YH, YCHC to 4/0 AWG YC-C **Taps, grounding:** to 500 kcmil YGHC-C, YGHP-C, YGHR-C
Aluminum #8 AWG - 1250 kcmil Code Cables	**Terminals:** YA-A, AYP, AYPO **Splices:** YS-A, YS-AT, YRB **Taps:** YFD, YFN, YFO, YFR
ACSR	See BURNDY® Overhead Transmission & Distribution

ACCESSORIES

Cutter Die:	Cat# **P15K** Maximum Dia. 1.2"
"U" Die Adapter:	Cat# **PUADP-1**
Battery:	Cat# **BAT18VLI** Hi-capacity Li-Ion (3.0 AH)
Chargers:	
120V-AC	Cat# **PATCHGR-LI**
12/24V-DC	Cat# **PATCHGR-LIDC**

PATRIOT® PAT46-18V

BATTERY ACTUATED TOOL

Hydraulic Self-Contained
15-Ton Crimping Tool

The BURNDY® PATRIOT® PAT46-18V incorporates the latest engineering technology with a patented high speed hydraulic pump. Our battery actuated hydraulic tool provides a consistent, reliable connection every time. The PAT46-18V features the BURNDY® Y46 tool head, capable of using all "P" and "U" style dies.

Each PATRIOT® tool uses standard BURNDY® dies and off-the-shelf conn-ectors available worldwide. Supplied with a durable high impact formed carrying case to hold the tool, battery charger, two batteries, tool retention lanyard, and die compartments to hold both "P" and "U" die sets (dies sold separately). All BURNDY® PATRIOT® PAT46 tools are provided with a 5-year limited warranty. 1-year warranty on battery and charger.

PAT46C-18V — with rubber covered head is available.

Features and Benefits

- The largest BURNDY® battery actuated crimp tool, providing 15-tons of output force with a 2" jaw opening
  - ◊ Allows users to install the largest variety of splices, taps and terminals with one tool. Also provides easy placement and removal from continuous conductor lengths
- State of the art C-Head crimp design with 355° head rotation
  - ◊ Versatile tool head positioning lets user get into tight areas easier
- Retractable assist handle under head of tool for better handling of tool
  - ◊ Allows for better balance of tool and retractable for getting head into tight areas
- Durable high impact formed carrying case
  - ◊ Provides superior protection and stores all accessories
- 18-volt Ni-MH battery eliminates voltage depression (memory issues)
  - ◊ Less "down-time" due to high capacity, high voltage 18-volt battery

SPECIFICATIONS

Output Force:	15 tons (13.6 metric tons)
Weight:	26.2 lbs (11.88 kg)
Length:	20.77" (52.76 cm)
Height:	14.43" (36.65 cm)
Width:	3.70" (9.40 cm)
Operating Voltage:	18 V-DC
Battery Recharge Time:	< 45 mins.

FOR USE ON

Connector Type	Conductor Range
Copper #8 AWG str. 1500 kcmil Code Cable, Navy Cable, Flexible and Extra Flexible 1/2" - 1" Ground Rods	**Terminals, grounding**: to 500 kcmil YGA, YGHA, YGF **Terminals, uninsulated**: #8 to 1500 kcmil: YA, YA-2N, YA-L, YA-LB, YA-TC, YA-2LN, YAB-4N, YAV-L Box, YAV-L, YAV-RS Box, YAV-RS, YA-TC-FX **Terminals, insulated:** #8 to 2/0 YAEV-L Box, YAEV-L, YAEV-H, YAEV-RS, YAEV-RH **Splices:** #8 to 1500 kcmil YS, YS-T, YS-L, YS-LB, YST, YSP-T, YGS, YGHS **Taps:** #14 to 1000 kcmil YH, YCHC to 4/0 AWG YC-C **Taps, grounding:** to 500 kcmil YGHC-C, YGHP-C, YGHR-C
Aluminum #8 AWG - 1250 kcmil Code Cables	**Terminals:** YA-A, AYP, AYPO **Splices:** YS-A, YS-AT, YRB **Taps:** YFD, YFN, YFO, YFR
ACSR	See BURNDY® Overhead Transmission & Distribution

ACCESSORIES

Cutter Die:	Cat# **P15K** Die max. 1.2" dia.
"U" Die Adapter:	Cat# **PUADP-1**
Battery:	Cat# **BAT18V** Hi-capacity Ni-MH (2.6AH)
Chargers:	
120V-AC	Cat# **PATCHGR18V**
12/24V-DC	Cat# **BCT/PATDCCHGR**
240/250V-AC	Cat# **PATCHGR250V**

Features

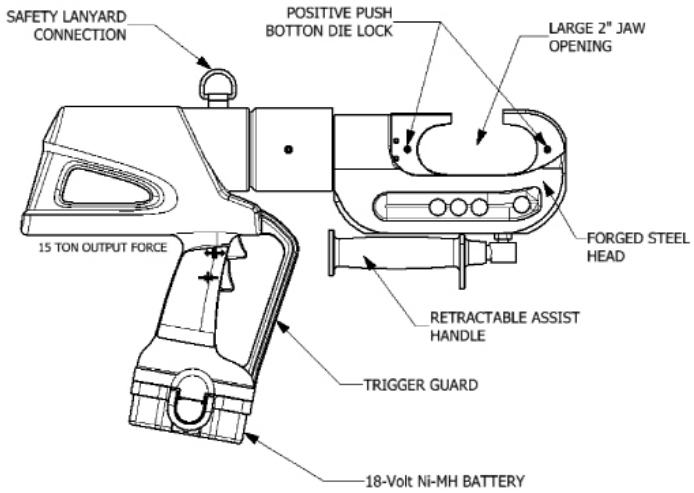

PATRIOT® PAT46LW-LI
PATRIOT® PAT46LW-18V

18V Lithium-Ion Battery Crimper
18V Ni-MH Battery Crimper

Hydraulic Self-Contained 15 Ton
Light Weight Crimping Tool

The BURNDY® PAT46LW is a light weight "latch head" style 15 ton crimping tool designed to terminate BURNDY® terminals and splices.

The PAT46LW Series incorporates the latest engineering technology featuring a patented high speed hydraulic pump for very quick actuation. The unique field proven electronics provides the ultimate reliability in the harshest work environments.

The PAT46LWLI and PAT46LW18V are capable of using all BURNDY® "P" and "U" style dies (U dies require PUADP-1 adapter). Every PAT46LW tool is supplied with a durable high impact formed carrying case to hold the tool, battery charger, two (2) 18 volt batteries (Li-ion or Ni-MH) and tool retention lanyard.

PAT46LW-LI

Features and Benefits

- New light weight design only 16.79 lbs (Lithium-Ion) and 17.3 lbs (Ni-MH)
- Available in both Li-ion, and Ni-MH 18-volt battery technology
- Provides 15-tons of output force with 2" jaw opening
- Redesigned field proven electronics
- Overmolded ergonomic handle on Li-ion version
- Rugged forged latching crimp head with 355° head rotation
- 5 year limited warranty on tool
- Lifetime warranty on INFINITY DRIVE®
- 1-year warranty on batteries and charger

Features on both Ni-MH and Li-Ion Styles:

1. 355° Rotation Head for use with P and U dies (with PUADP-1)
2. Large 2" Jaw Opening
3. Audible "Pop Off" Valve
4. Locking Latch Pin
5. Trigger Guard
6. Safety Lanyard Connection

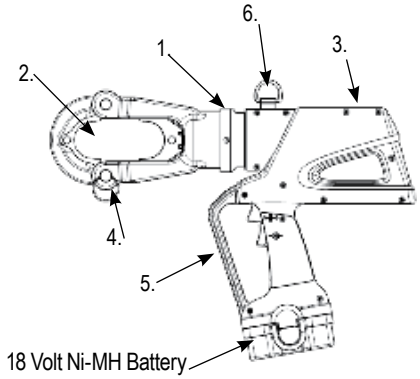

PAT46LW-18V

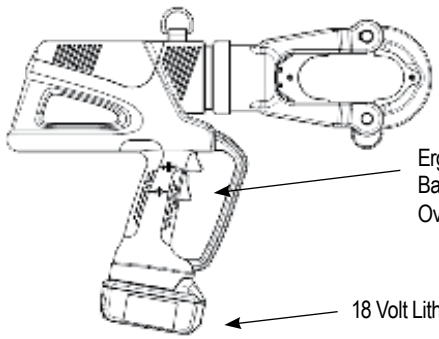

PAT46LW-LI

SPECIFICATIONS

Output Force:	15 Tons
Total Weight:	16.79 lbs (Li-ion) 17.3 lbs (Ni-MH)
Length:	18.65 in (Li-ion) 18.65 in (Ni-MH)
Height:	13.75 in (Li-ion) 13.75 in (Ni-MH)
Operating Voltage:	18V-DC
Battery Recharge Time:	30 minutes (Li-ion) 45 minutes (Ni-MH)
Head Rotation:	355° (both)

FOR USE ON

Copper #8 AWG str. 1500 kcmil Code Cable, Navy Cable, Flexible and Extra Flexible 1/2" - 1" Ground Rods	Terminals, grounding: to 500 kcmil YGA, YGHA, YGF Terminals, uninsulated: #8 to 1500 kcmil: YA, YA-2N, YA-L, YA-LB, YA-TC, YA-2LN,YAB-4N YAV-L Box, YAV-L, YAV-RS Box, YAV-RS, YA-TC-FX Terminals, insulated: #8 to 2/0 YAEV-L Box, YAEV-L, YAEV-H, YAEV-RS, YAEV-RH Splices: #8 to 1500 kcmil YS, YS-T, YS-L, YS-LB, YST, YSP-T, YGS, YGHS Taps: YH, YCHC #14 to 1000 kcmil, YC-C to 4/0 AWG Taps, grounding: to 500 kcmil YGHC-C, YGHP-C, YGHR-C
Aluminum #8 AWG -1250 kcmil Code Cables	Terminals: YA-A, AYP, AYPO Splices: YS-A, YS-AT, YRB Taps: YFD, YFN, YFO, YFR
ACSR See BURNDY® Overhead Transmission and Distribution Catalog Module	

ACCESSORIES

Cutter Die:	Cat# **P15K**
"U" Die Adapter:	Cat# **PUADP-1**
Battery:	Cat# **BAT18VLI** Hi-capacity (3.0 AH) Li-Ion Cat# **BAT18V** Hi-capacity (2.6 AH) Ni-MH
Li-Ion Chargers:	
120V-AC	Cat# **PATCHGRLI**
12/24V-DC	Cat# **PATCHGR-LIDC**
Ni-MH Chargers:	
120V-AC	Cat# **PATCHGR18V**
12/24V-DC	Cat# **BCT/PATDCCHGR**
240/250V-AC	Cat# **PATCHGR250V**

PATRIOT® HIGH PERFORMANCE PAT750-LI

18 Volt Lithium-Ion Battery Actuated Tool

Hydraulic Self-Contained
12-Ton Crimping Tool

The BURNDY® PATRIOT® PAT750-LI Lithium-Ion tool is approximately 25% faster than the previous models. In addition to faster crimp cycles, the high performance PAT750-LI has newly designed electronics that are field proven to handle the harshest work environments.

The PAT750-LI incorporates the latest engineering technology with a refined hydraulic system for ultra performance, speed and reliability. The redesigned field proven electronics provides the ultimate reliability in the harshest work environments. All BURNDY® battery actuated hydraulic tools provide a consistent, reliable connection every time. The PAT750-LI features the BURNDY® Y750 tool head, capable of using all "U" style dies, and incorporates a bearing and alignment guide for use on HYGROUND® and other asymmetrical connectors. The crimp head rotates 355° for operation in virtually any position.

Each PATRIOT® tool uses standard BURNDY® dies and off-the-shelf connectors available world-wide. Supplied with a durable high impact formed carrying case to hold the tool, battery charger, two 18 volt Lithium-Ion batteries, tool retention lanyard and die compartment to hold "U" die sets (sold separately). Provided with a 5-year limited warranty. All PATRIOT® tools feature the BURNDY® INFINITY DRIVE® transmission which has a lifetime warranty.

Features and Benefits

- Refined hydraulic system for ultra performance,speed and reliability
- Field proven electronics for ultimate reliability in the harshest environments
- Over-molded handle for comfort and improved grip; allows for one-handed operation for advance, retract and hold
- 18 volt Lithium-Ion batteries provide 2.5 times more charge/discharge cycles than traditional Ni-Cd batteries and provide 430% more lifetime work
- 30-minute charger controls current, voltage & temperature to maximize battery life, forced air cooling fan cools the battery by forcing cool air through the battery's built-in air vents
- State of the art crimping head design, 355° head rotation lets user get into tight areas easier
- Allows use of standard BURNDY® dies already in use
- Ergonomically balanced tool design eases operation
- Durable high impact formed carrying case provides superior protection and stores all accessories
- PAT750C-LI with rubber covered head is available
- 1-year warranty on batteries and charger

SPECIFICATIONS

Output Force:	12 tons (10.9 metric tons)
Tool Weight:	15.7 lbs (7.12 kg) With Battery
Length:	15.75 in (40 cm)
Width:	3.5 in (8.89 cm)
Height:	13.5 in (34.29 cm)
Operating Voltage:	18 V-DC
Recharge Time:	30 minutes

FOR USE ON

Tension Sleeves	
Copper	#8 sol. - 500 kcmil
Aluminum	#8 sol. - 587.2 kcmil
ACSR	#4 - 556.5 kcmil
Taps	
Copper	#14 sol. - 500 kcmil
Aluminum	#8 - 500 kcmil
Aerial Cable	
Copper	#6 - 500 kcmil
Terminals & Splices	
Aluminum	#8 - 750 kcmil
Copper	#8 - 750 kcmil
ACSR	#4 - 556 kcmil
HYGROUND®	
Copper	#8 - 500 kcmil (cable/ground rod)
Ground Rods	1/2" - 1" Diameter

ACCESSORIES

Battery:	Cat# **BAT18VLI** Hi-capacity (3.0 AH)
Chargers:	
120V-AC	Cat# **PATCHGRLI**
12/24V-DC	Cat# **PATCHGR-LIDC**
Lanyard:	Cat# **PT208620**

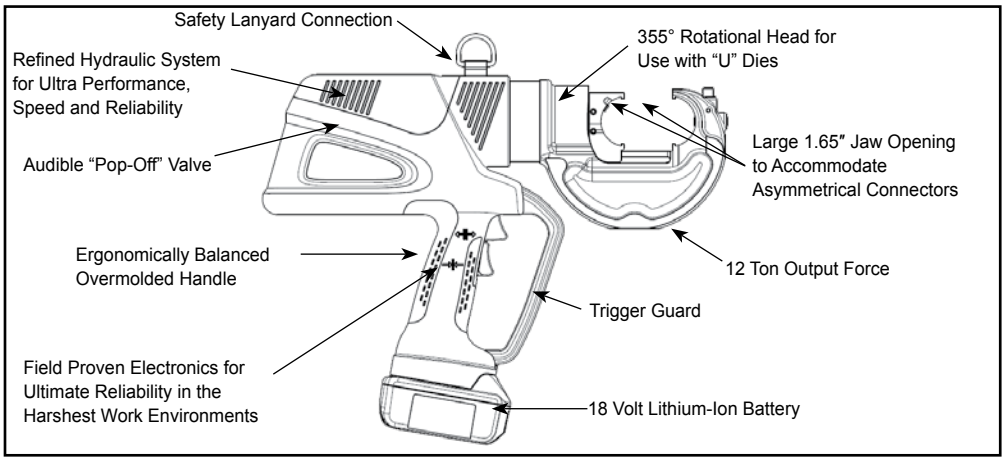

PATRIOT® HIGH PERFORMANCE PAT750XT-18V

BATTERY ACTUATED TOOL

Hydraulic Self-Contained
12-Ton Crimping Tool

The BURNDY® PATRIOT® High Performance PAT750XT-18V tool is 25% faster than previous models. In addition to faster crimp cycles, the High Performance PAT750XT-18V has newly designed electronics that are field proven for ultimate reliability and proven to handle the harshest work environments.

The High Performance PAT750XT-18V incorporates the latest engineering technology with a refined hydraulic system for ultra performance, speed and reliability.All PATRIOT® tools feature the BURNDY® INFINITY DRIVE® transmission which has a lifetime warranty.

The High Performance PAT750XT-18V features the BURNDY® Y750 tool head, capable of using all "U" style dies, and incorporates a bearing and alignment guide for use on HYGROUND® and other asymmetrical connectors. Features reliable head rotation design for operation in virtually any position. All PATRIOT® battery actuated hydraulic tools provide a consistent, reliable connection every time.

Each PATRIOT® tool uses standard BURNDY® dies and off-the-shelf connectors available world-wide. Supplied with a durable high impact formed carrying case to hold the tool, battery charger, two batteries, tool retention lanyard, and die compartment to hold "U" die sets. (Dies sold separately.) All BURNDY® PATRIOT® 18V series tools are provided with a 5-year limited warranty.

Features and Benefits

- Refined hydraulic system for ultra performance, speed and reliability
- Field proven electronics for ultimate reliability in the harshest environments
- True one-handed operation for advance, retract, and hold
- 12 tons of output force for use on virtually all compression applications
- State of the art crimping head design, 355° head rotation lets user get into tight areas easier
- Allows use of standard BURNDY® "U" dies already in use
- Ergonomically balanced tool design eases operation and helps lessen fatigue
- Durable high impact formed carrying case provides superior protection and stores all accessories
- PAT750CXT-18V — with rubber covered head is available
- 18 volt Ni-MH battery eliminates voltage depression (memory issues)
- 1-year warranty on batteries and charger

SPECIFICATIONS

Output Force:	12 tons (10.9 metric tons)
Tool Weight:	16.5 lbs (7.5 kg) With Battery
Length:	15.75 in (40 cm)
Width:	3.5 in (8.89 cm)
Height:	13.5 in (34.29 cm)
Operating Voltage:	18 V-DC
Recharge Time:	< 45 minutes

FOR USE ON

Tension Sleeves	
Copper	#8 sol. - 500 kcmil
Aluminum	#8 sol. - 587.2 kcmil
ACSR	#4 - 556.5 kcmil
Taps	
Copper	#14 sol. - 500 kcmil
Aluminum	#8 - 500 kcmil
Aerial Cable	
Copper	#6 - 500 kcmil
Terminals & Splices	
Aluminum	#8 - 750 kcmil
Copper	#8 - 750 kcmil
ACSR	#4 - 556 kcmil
HYGROUND®	
Copper	#8 - 500 kcmil (cable/ground rod)
Ground Rods	1/2" - 1" Diameter

ACCESSORIES

Battery:	Cat# **BAT18V** Hi-capacity (2.6 AH)
Chargers:	
120V-AC	Cat# **PATCHGR18V**
12/24V-DC	Cat# **BCT/PATDCCHGR**
240/250V-AC	Cat# **PATCHGR250V**
Lanyard:	Cat# **PT208620**

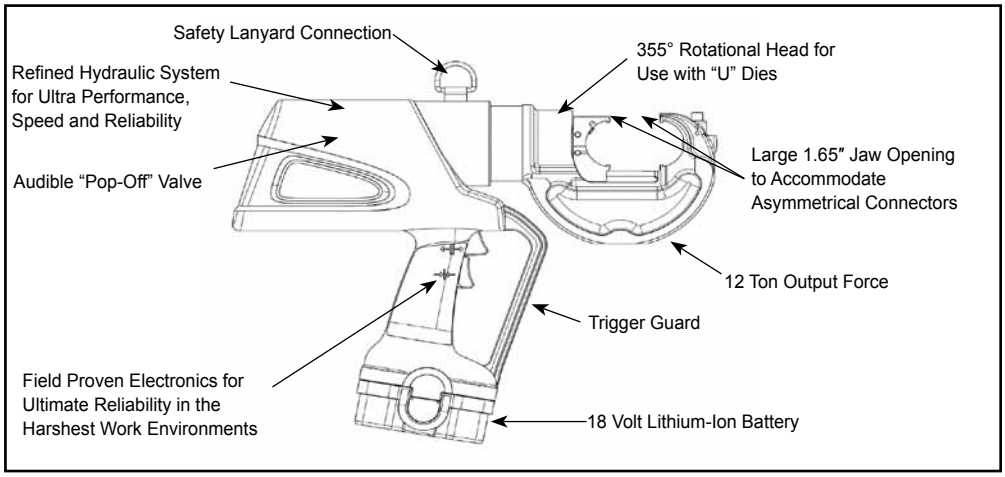

PATRIOT®
PAT750K-LI (Li-Ion)
PAT750K-18V (Ni-MH)

BATTERY ACTUATED TOOL

Hydraulic Self-Contained
12-Ton Crimping Tool

The BURNDY® PATRIOT® tools can be operated with only one hand, making them the most ergonomic, one-handed battery powered crimping and cutting tools available in the world today.

The PAT750K series of tools incorporate the latest engineering technology with the patented high speed hydraulic pump. Our battery actuated hydraulic tools provides a consistent, reliable connection every time. The PAT750K series tools are capable of using KEARNEY™ WH1 and WH2 and BURNDY® "U" style dies with the KUADP adapter. The PAT750K head rotates 355° for operation in virtually any position.

Each PATRIOT® tool uses standard BURNDY® dies and off-the-shelf connectors available world-wide. The PAT750K tools are supplied with a durable high impact formed carrying case to hold the tool, battery charger, two batteries, tool retention lanyard, and die compartment to hold "U" die sets. (Dies sold separately.) All BURNDY® PATRIOT® series tools are provided with a 5-year limited warranty.

PAT750K-18V (Ni-MH)

Features and Benefits

- True one-handed operation for advance, retract, and hold
- 12 ton output force
- State of the art crimping head design with 355° rotation
- Positive lock die buttons to secure dies or die adapter
- Allows use of standard BURNDY® "U" dies with KUADP adapter, and KEARNEY™ WH1 and WH2 dies
- Smoother, quieter, more efficient tool operation
- **PAT750CK-18V** (Ni-MH) with rubber covered head is available
- Ergonomically balanced tool design to help lessen operator fatigue
- Durable high impact formed carrying case
- Lifetime warranty on INFINITY DRIVE®
- 1-year warranty on battery and charger

SPECIFICATIONS

Output Force:	12 tons (10.9 metric tons)
Tool Weight:	18.4 lbs (8.3 kg) With Battery
Length:	17.5 in (44.45 cm)
Height:	3.5 in (8.89 cm)
Width:	13.5 in (34.29 cm)
Operating Voltage:	18 V-DC
Recharge Time:	<30 minutes (Li-Ion) < 45 minutes (Ni-MH)

FOR USE ON

Tension Sleeves :	up to 477 ACSR kcmil
Taps :	through 500 kcmil
Terminals :	up to 1033 kcmil

ACCESSORIES

"U" Die Adapter:	**KUADP**
Li-Ion Battery:	**BAT18VLI (Li-Ion)** Hi-capacity (3.0 AH)
Li-Ion Charger:	
120V-AC	**PATCHGRLI**
12/24V-DC	**PATCHGR-LIDC**
Ni-MH Battery:	**BAT18V (Ni-MH)** Hi-capacity (2.6 AH)
Ni-MH Charger:	
120V-AC	**PATCHGR18V**
12/24V-DC	**BCT/PATDCCHGR**
240/250V-AC	**PATCHGR250V**
Lanyard:	**PT208620**

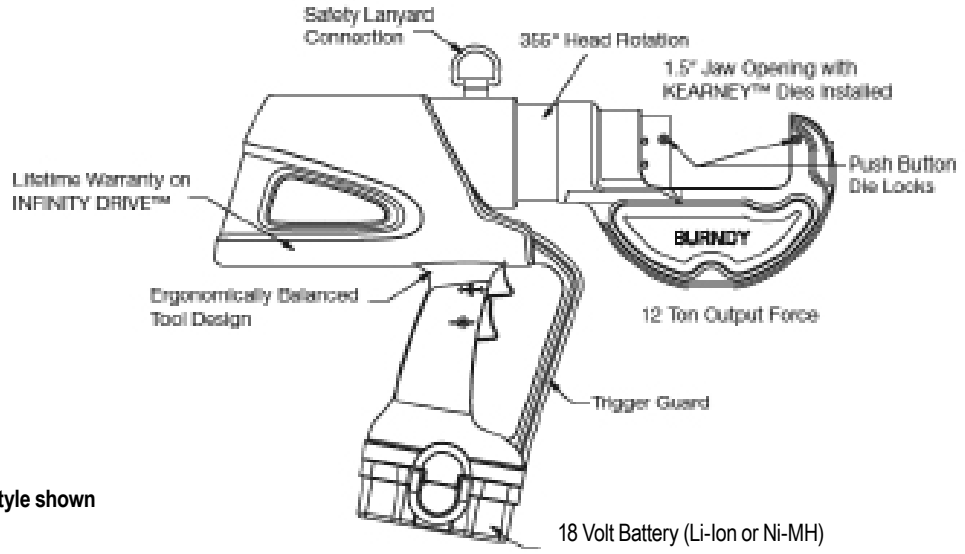

PAT750K-18V style shown

PATRIOT® HIGH PERFORMANCE PAT644-LI

18 Volt Lithium-Ion Battery Actuated Tool

Hydraulic Self-Contained
11-Ton Dieless Crimping Tool

The BURNDY® PATRIOT® PAT644-LI Lithium-Ion tool is approximately 25% faster than the previous models. In addtion to faster crimp cycles, the high performance PAT644-LI has newly designed electronics that are field proven for ultimate reliability and proven to handle the harshest work environments.

The PAT644-LI incorporates the latest engineering technology with a refined hydraulic system for ultra performance, speed and reliability. The redesigned field proven electronics provides the ultimate reliabilty in the harshest work environments. All BURNDY® battery actuated hydraulic tools provide a consistent, reliable connection every time. The PAT644-LI features the BURNDY® Y644 dieless latch head which elimates the need to purchase and maintain dies. The crimp head rotates 355° for operation in virtually any position.

The PAT644-LI is supplied with a durable high impact formed carrying case to hold the tool, battery charger, two 18 volt Lithium-Ion batteries and tool retention lanyard. Most BURNDY® PATRIOT® 18V series tools provided with a 5-year limited warranty. 1-year warranty on batteries and charger. All PATRIOT® tools feature the BURNDY® INFINITY DRIVE® transmission which has a lifetime warranty.

PAT644-LI Range Taking Capabilities:
Refer to the individual connector pages for detailed information on the PAT644-LI range taking capabilities.

Features and Benefits

- Overmolded handle for comfort and improved grip; allows for one-handed operation for advance, retract and hold
- 18-volt Lithium-Ion batteries provide 2.5 times more charge/discharge cycles than traditional Ni-Cd batteries and provide 430% more life time work
- 30-minute charger controls current, voltage & temperature to maximize battery life
- Forced air cooling fan cools the battery by forcing cool air through the battery's built-in air vents
- Dieless system elimates the need to purchase and maintain dies
- Dieless system allows connectors and splices to become range taking
- State of the art crimping head design, 355° head rotation lets user get into tight areas easier
- Ergonomically balanced tool design eases operation
- Durable high impact formed carrying case provides superior protection and stores all accessories

SPECIFICATIONS

Output Force:	11 tons (10 metric tons)
Tool Weight:	16.3 lbs (7.39 kg) With Battery
Length:	15.6" (39.60 cm)
Width:	3.2" (8.10 cm)
Height:	14.1" (35.80 cm)
Operating Voltage:	18 V-DC
Recharge Time:	30 minutes

FOR USE ON

Copper #6-1000 kcmil	**Terminals:** YA-L, YA-2LN, YA, YA-2N,YA-L-2TC, YAB-4N, YA-L-TC, YA-2L, YA-4N **Splices:** YS-L, YS, YS-T
Aluminum #6-750 kcmil	**Terminals:** YA-A, YA-A-TN **Splices:** YS-A
Aluminum #6-750 kcmil	**HYPLUG™** AYP, AYPO

ACCESSORIES

Battery:	Cat# **BAT18VLI** (3.0 AH) Hi-capacity
Chargers:	
120V-AC	Cat# **PATCHGR-LI**
12/24V-DC	Cat# **PATCHGR-LIDC**
Lanyard:	Cat# **PT208620**

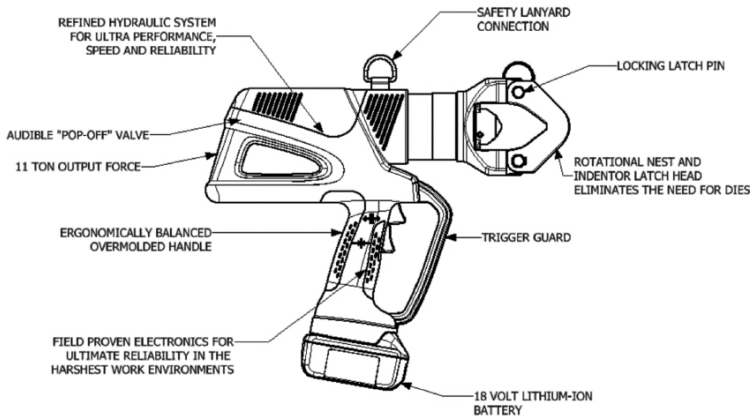

PATRIOT® PAT644XT-18V

BATTERY ACTUATED TOOL

Hydraulic Self-Contained
11 Ton Dieless Crimping Tool

The BURNDY® PATRIOT® series of battery actuated tools can be operated with only one hand, which allows the other hand to be free to position the connector and conductor prior to crimping.

The BURNDY® PATRIOT® PAT644XT-18V incorporates the latest engineering technology with patent pending pump, transmission and piston component designs. Our self-contained hydraulic tool provides a consistent reliable connection every time. The PAT644XT-18V features the BURNDY® Y644 dieless latch head tool which eliminates the need to purchase and maintain dies. Features reliable head rotation design for operation in virtually any position.

Each PATRIOT® tool uses standard BURNDY® off-the-shelf connectors available world-wide. Supplied with a durable high impact formed carrying case to hold the tool, battery charger, two batteries, and tool retention lanyard. All BURNDY® PATRIOT® 18V series tools are provided with a 5-year limited warranty.

PAT644XT-18V Range Taking Capabilities:
Please refer to the individual connector pages for detailed information on the PAT644XT-18V range taking capabilities.

Features and Benefits

- Dieless system
- True one-handed operation for advance,retract, and hold
- 11-ton output force
- State of the art crimping head design, 355° head rotation
- Audible "pop-off" indicates properly completed crimps
- Ergonomically balanced tool design
- Durable High Impact Formed carrying case
- Ni-MH battery eliminates voltage depression (memory issues)
- 1-year warranty on batteries and charger
- Eliminates the need to purchase and maintain dies
- Easier tool operation.
- Versatile tool head positioning lets user get into tight areas easier
- Less "down-time" due to high capacity, high voltage 18 volt battery

SPECIFICATIONS

Crimp Force:	11 tons (10.9 metric tons)
Tool Weight:	17 lbs (7.7 kg)
Length:	14.9" (37.8 cm)
Height:	14" (35.6 cm)
Width:	3.7" (9.4 cm)
Operating Voltage:	18 V-DC
Recharge Time:	< 45 mins.

Features and Benefits
(Continued)

- Assures proper crimps with both audible and visual indicators, leaving no doubt for the tool user
- Ergonomically balanced tool eases operation and helps lessen fatigue
- Smoother, quieter, more efficient tool operation
- Durable high impact formed case provides superior protection and stores all accessories

FOR USE ON

Copper #6-1000 kcmil	**Terminals:** YA-L, YA-2LN, YA, YA-2N,YA-L-2TC, YAB-4N, YA-L-TC, YA-2L, YA-4N **Splices:** YS-L, YS, YS-T
Aluminum #6-750 kcmil	**Terminals:** YA-A, YA-A-TN **Splices:** YS-A
Aluminum #6-750 kcmil	**HYPLUG™** AYP, AYPO

ACCESSORIES

Battery:	Cat# **BAT18V** Hi-capacity Ni-MH (2.6 AH)
Chargers:	
120V-AC	Cat# **PATCHGR18V**
12/24V-DC	Cat# **BCT/PATDCCHGR**
240/250V-AC	Cat# **PATCHGR250V**
Lanyard:	Cat# **PT208620**

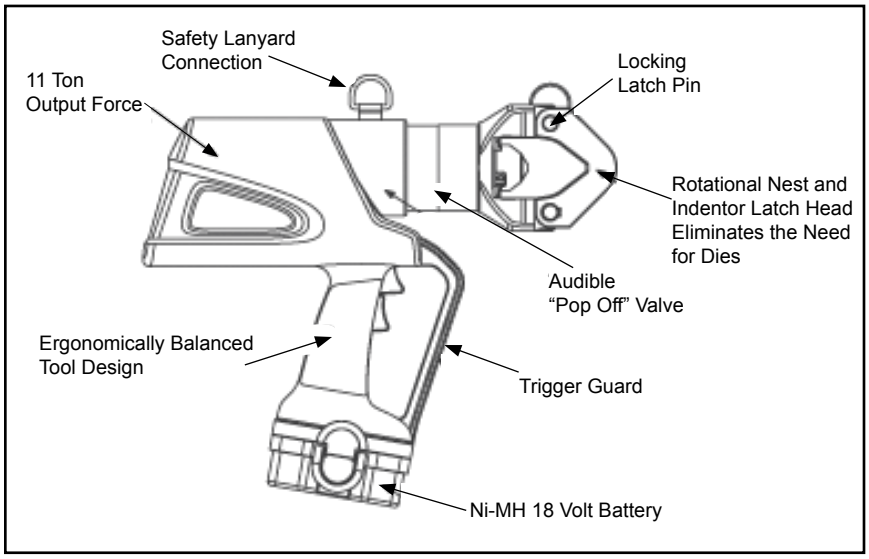

4-POINT® PATRIOT® PAT81KFT-LI

18 Volt Lithium-Ion Battery Actuated Tool

Hydraulic Self-Contained 6-Ton 4-POINT® Dieless Crimping Tool

The BURNDY® PAT81KFT-LI Lithium-Ion tool incorporates the latest engineering technology with a refined hydraulic system for ultra performance, speed and reliability. The redesigned field proven electronics provide the ultimate reliability in the harshest work environments. All BURNDY® battery actuated hydraulic tools provide a consistent, reliable connection every time. The PAT81KFT-LI features a dieless latch head design which eliminates the need to purchase and maintain dies. The crimp head rotates 360° for operation in virtually any position.

Supplied with durable high impact formed carrying case to hold tool, battery charger and (2) 18V Lithium-Ion batteries, and tool retention lanyard. Provided with 5-year limited warranty on the tool and 1-year warranty on batteries and charger. All PATRIOT® tools features the BURNDY® INFINITY DRIVE® which has a lifetime warranty.

PAT81KFT-LI Range Taking Capabilities:
The PAT81KFT-LI provides range taking capabilities that are UL Listed and CSA Certified for copper (code, compact and flex) and aluminum (code and compact) conductors when used in conjuction with BURNDY® HYLUG™ terminals and HYLINK™ splices.

Features and Benefits

- Refined hydraulic system for ultra performance, speed and reliability
- Field proven electronics for ultimate reliability in the harshest environments
- Overmolded handle for comfort and improved grip; allows for one-handed operation for advance, retract and hold
- 18-volt Lithium-Ion batteries provide 2.5 times more charge/discharge cycles than traditional Ni-Cd batteries and provide 430% more lifetime work
- 30-minute charger controls current, voltage and temperature to maximize battery life
- Forced air cooling fan cools the battery by forcing cool air through the battery's built in air vents
- Dieless system allows connectors and splices to become range taking
- State of the art crimping head design, 360° head rotation lets user get into tight areas easier
- Ergonomically balanced tool design eases operation and helps lessen fatigue

SPECIFICATIONS

Output Force:	6 tons (5.4 metric tons)
Tool Weight:	13.2 lbs (5.90 kg) With Battery
Length:	15.6" (39.60 cm)
Width:	3.2" (8.10 cm)
Height:	14.1" (35.8 cm)
Operating Voltage:	18 V-DC
Recharge Time:	30 minutes

FOR USE ON

Copper #8-1000 kcmil	**Terminals:** YA, YA-L **Splices:** YS-L, YS, YS-T, Y-R
Copper Flex #8-777.7 kcmil Flex (750 Nominal)	**Terminals:** YA-FX, YAV, YA-L-FX **Splices:** YS, YSV-FXB
Aluminum #8-750 kcmil	**Terminals:** YA-A, YA-A-TN **Splices:** YS-A
Aluminum #8-750 kcmil	**HYPLUG™** AYP, AYPO

ACCESSORIES

Battery:	Cat# **BAT18VLI** (3.0 AH) Hi-capacity
Chargers:	
120V-AC	Cat# **PATCHGR-LI**
12/24V-DC	Cat# **PATCHGR-LIDC**
Lanyard:	Cat# **PT208620**

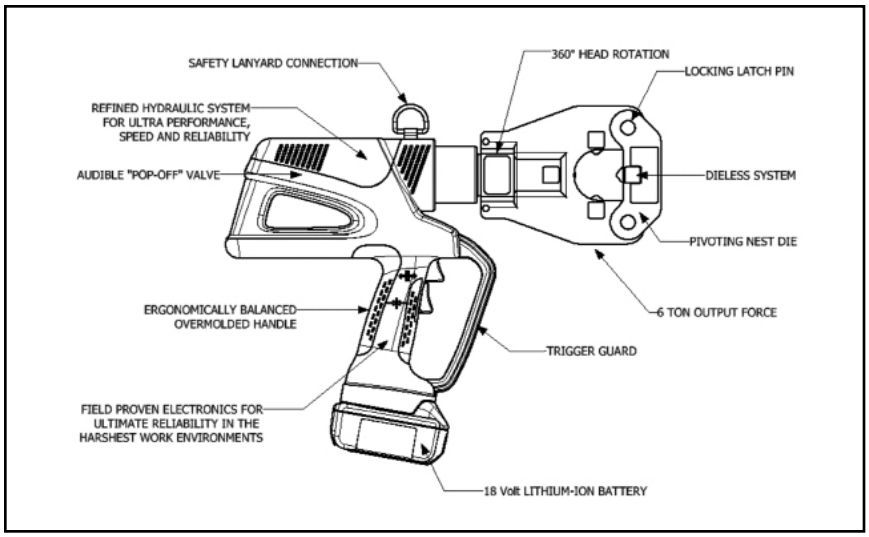

4-POINT® PATRIOT® PAT81KFT-18V

BATTERY ACTUATED TOOL

Hydraulic Self-Contained Crimping Tool

#8-1000 kcmil Copper HYLUG™ Terminals and HYLINK™ Splices

#8-750 kcmil Aluminum HYLUG™ Terminals and HYLINK™ Splices

The BURNDY® PAT81KFT-18V is a battery powered crimping tool that provides a powerful 6 tons of crimping force. It is compact, fast, easy to use and incorporates the latest in battery tool technology. The ergonomic design allows for one hand operation so that the other is free to position the connectors and conductor prior to crimping. The PAT81KFT-18V features a dieless latch head design which eliminates the need to purchase and maintain dies. Featuring 360° head rotation, the PAT81KFT-18V is designed for easy operation in virtually any position.

The PAT81KFT-18V is supplied with a high impact carrying case, battery charger, lanyard and two batteries. The PAT81KFT-18V comes complete with a 5-year limited warranty on the tool and 1-year limited warranty on the batteries.

PAT81KFT-18V Dieless HYPRESS™ Range Taking Capabilities: The PAT81KFT-18V provides range taking capabilities that is UL and CSA Listed for Copper (Code, Compact and Flex) and Aluminum (Code and Compact) conductors when used in conjunction with BURNDY® HYLUG™ terminals and HYLINK™ splices. *See chart for connector, conductor and range taking combinations.*

Features and Benefits

- Dieless installation system
- Audible pressure "pop-off" valve and die embossment providing 360° inspectability
- Battery powered crimp technology
- Advanced high speed pump design
- 360 Degree head rotation
- Versatile tool head positioning lets the user get into tight areas easier
- Ram holds position when trigger is released
- Mechanical ram release
- Audible pressure "pop-off" value

SPECIFICATIONS

Output Force:	6 tons (5.4 metric tons)
Tool Weight:	14 lbs (6.35 kg)
Length:	17.6" (447 mm)
Height:	13.9" (354 mm)
Width:	3.7" (94 mm)
Operating Voltage:	18 V-DC
Recharge Time:	<45 minutes

FOR USE ON

Copper, Aluminum, Compressed, Compact, Stranded, Solid and Flex Conductors

Installs Splices, Taps and Terminations:

#8 - 1000 kcmil Copper
(YA, YA-L, YS, YS-L, YS-T, Y-R)

#8 - 777.7 (750 Nominal Flex Wire Size)
kcmil Flex (YA-FX, YAV, YA-L-FX, YS, YSV-FXB)

#8 - 750 kcmil Aluminum (YA-A, YS-A)

#8 - 750 kcmil Aluminum Pin Adapters (AYP, AYPO)

ACCESSORIES

Battery:	Cat# **BAT18V** (2.6 AH) Hi-capacity Ni-MH
Chargers:	
120V-AC	Cat# **PATCHGR18V**
12/24V-DC	Cat# **BCT/PATDCCHGR**
240/250V-AC	Cat# **PATCHGR250V**
Lanyard:	Cat# **PT208620**

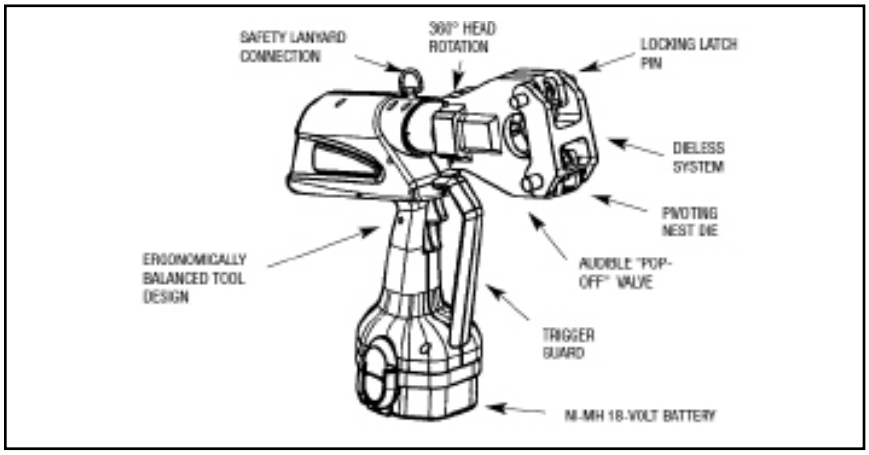

4-POINT® PATRIOT® PAT4PC834-LI

18 Volt Lithium-Ion Battery Actuated Tool

Hydraulic Self-Contained 6-Ton 4-POINT® Dieless Crimping Tool

The BURNDY® PAT4PC834-LI 4-POINT® dieless C-head Lithium-Ion tool incorporates the latest engineering technology with a refined hydraulic system for ultra performance, speed and reliability. The redesigned field proven electronics provide the ultimate reliability in the harshest work environments. All BURNDY® battery actuated hydraulic tools provide a consistent, reliable connection every time. The PAT4PC834-LI features a C-shaped head design making it ideal for crimping in tight areas and can be easily removed from continuous conductor runs. The dieless capability of this tool eliminates the need to purchase and maintain dies. The crimp head rotates 360° for operation in virtually any position.

The PAT4PC834-LI is supplied with a durable high impact formed carrying case to hold the tool, battery charger, two 18 volt Lithium-Ion batteries and tool retention lanyard. All BURNDY® PATRIOT® 18V series tools are provided with a 5-year limited warranty on the tool and a 1-year warranty on batteries and chargers. All PATRIOT® tools feature the BURNDY® INFINITY DRIVE® transmission which has a lifetime warranty.

PAT4PC834-LI Range Taking Capabilities:
The PAT4PC834-LI provides range taking capabilities that are UL and CSA certified for copper (code, compact and flex) and aluminum (code and compact) conductors when used in conjunction with BURNDY® HYLUG™ terminals and HYLINK™ splices.

Features and Benefits

- Refined hydraulic system for ultra performance, speed and reliability
- Field proven electronics for ultimate reliability in the harshest environments
- Overmolded handle for comfort and improved grip; allows for one-handed operation for advance, retract and hold
- 18-volt Lithium-Ion batteries provide 2.5 times more charge/discharge cycles than traditional Ni-Cd batteries and provide 430% more lifetime work
- 30-minute charger controls current, voltage and temperature to maximize battery life
- Forced air cooling fan cools the battery by forcing cool air through the battery's built in air vents
- Dieless system eliminates the need to purchase and maintain dies
- Dieless system allows connectors and splices to become range taking
- C-shaped head design rotates 360° and allows for easy removal on continuous conductors
- Ergonomically balanced tool design eases operation and helps lessen fatigue

SPECIFICATIONS

Output Force:	6 ton (5.4 metric tons)
Tool Weight:	13 lbs (5.9 kg) With Battery
Length:	15.6" (39.6 cm)
Width:	3.2" (8.1 cm)
Height:	14.1" (35.8 cm)
Operating Voltage:	18 V-DC
Recharge Time:	30 minutes

FOR USE ON

Copper #8-1000 kcmil	**Terminals:** YA, YA-L **Splices:** YS-L, YS, YS-T, Y-R
Copper Flex #8-777.7 kcmil Flex (750 Nominal)	**Terminals:** YA-FX, YAV, YA-L-FX **Splices:** YS, YSV-FXB
Aluminum #8-750 kcmil	**Terminals:** YA-A, YA-A-TN **Splices:** YS-A
Aluminum #8-750 kcmil	**HYPLUG™** AYP, AYPO

ACCESSORIES

Battery:	Cat# **BAT18VLI** (3.0 AH) Hi-capacity
Chargers:	
120V-AC	Cat# **PATCHGR-LI**
12/24V-DC	Cat# **PATCHGR-LIDC**
Lanyard:	Cat# **PT208620**

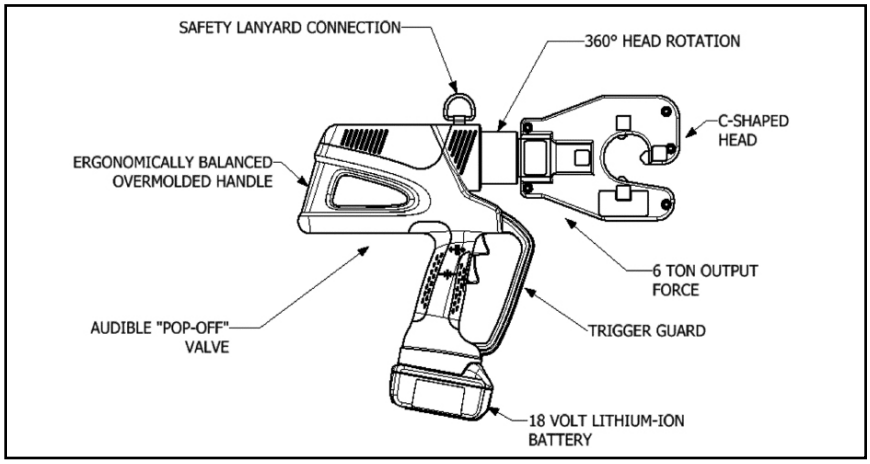

4-POINT® PATRIOT® PAT4PC834-18V

BATTERY ACTUATED TOOL

Hydraulic Self-Contained
6-Ton Dieless Crimping Tool

The BURNDY® PATRIOT® 4-POINT® C-shaped head dieless HYPRESS™ is a battery actuated 6 ton hydraulic crimping tool for use on a wide variety of tap, terminate, and splice compression applications. The dieless capability of this tool eliminates the need to purchase or maintain additional dies. It is compact, fast, easy to use and incorporates the latest in battery tool technology. The ergonomic design allows for one hand operation so that the other is free to position the connector and conductor prior to crimping. The PAT4PC834-18V incorporates a C-shaped head design making it ideal for crimping in tight areas and can be easily removed from continuous conductor runs. The head rotates 360° and is mated to a patented rapid advance pump. The PAT4PC834-18V weighs only 13.8 pounds and delivers 6 tons of crimping force. The result allows for easy tap, termination and splicing of compression connectors.

The PAT4PC834-18V is supplied with a molded high impact carry case, battery charger, lanyard, and two batteries. The PAT4PC834-18V comes with a 5-year limited warranty.

The PAT4PC834-18V provides range taking capabilities that are UL Listed and CSA Certified for Copper (Code, Compact and Flex) and Aluminum (Code and Compact) conductors when used in conjunction with BURNDY® HYLUG™ terminals and HYLINK™ splices.

Features and Benefits

- Dieless installation system
- UL Listed and CSA Certified with range taking capabilities
- C-shaped head Design
- Audible pressure "pop-off" valve and die embossment providing 360° inspectability
- Handle Trigger release
- Advanced high speed pump design
- 360° head rotation
- Durable high impact formed carrying case
- 5-year limited warranty

ACCESSORIES

Battery:	Cat# **BAT18V** (2.6 AH) Hi-capacity Ni-MH
Chargers:	
120V-AC	Cat# **PATCHGR18V**
12/24V-DC	Cat# **BCT/PATDCCHGR**
240/250V-AC	Cat# **PATCHGR250V**
Lanyard:	Cat# **PT208620**

SPECIFICATIONS

Output Force:	6 ton (5.4 metric tons)
Tool Weight:	13.85 lbs (6.28 kg) With Battery
Length:	17.6 in (448 mm)
Height:	13.9 in (354 mm)
Width:	3.7 in (94 mm)
Operating Voltage:	18 V-DC
Recharge Time:	<45 minutes

FOR USE ON

Copper, Aluminum, Compressed, Compact, Stranded, Solid and Flex Conductors

Installs Splices, Taps and Terminations:

#8 - 1000 kcmil Copper (YA, YA-L)
#8 - 500 kcmil Copper (YS, YS-T, YS-L, Y-R))
#8 - 777 (750 Nominal Flex Wire Size) kcmil Flex (YA-FX, YAV, YA-L-FX)
#8 - 535 (500 kcmil nominal flex wire size) kcmil flex (YS, YS-LB, YSV-FXB)
#8 - 750 kcmil Aluminum (YA-A)
#8 - 350 kcmil Aluminum (YS-A)
#8 - 750 kcmil Aluminum Pin Adapters (AYP, AYPO)

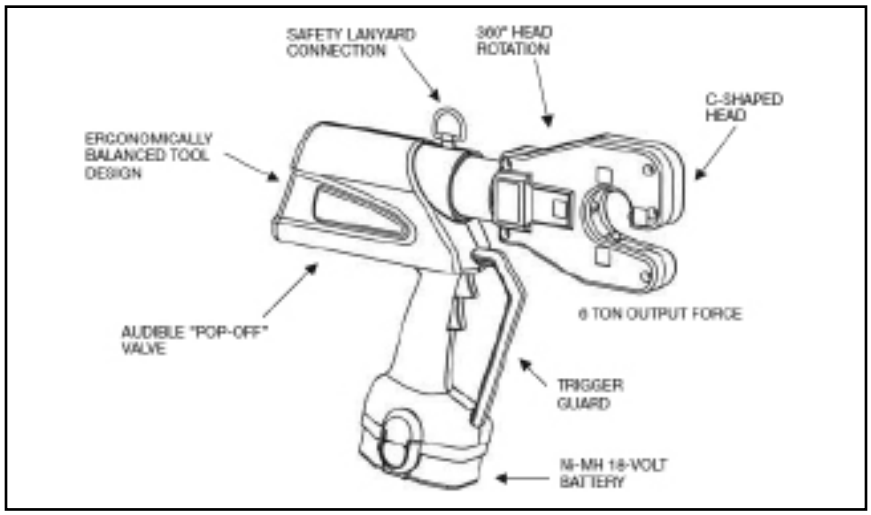

PATRIOT® PAT600-LI

18 Volt Lithium-Ion Battery Actuated Tool

Hydraulic Self-Contained
6-Ton Crimping Tool

The BURNDY® PAT600-LI Lithium-Ion tool incorporates the latest engineering technology with a refined hydraulic system for ultra performance, speed and reliability. The redesigned field proven electronics provide the ultimate reliability in the harshest work environments. All BURNDY® battery actuated hydraulic tools provide a consistent, reliable connection every time.

The PAT600-LI battery actuated tool provides 6 tons of crimping force and completes a crimp in approximately 3 seconds. The PAT600-LI incorporates a specialized latch style head with enhanced working stroke and clearance capabilities. The latch-style head allows interference-free closure on tap connections up to the BURNDY® YHD-400 size.

Die selection with the PAT600-LI includes "W", "X" and "W-VT" style dies which seat in the permanent "D3" crimp groove. Installation applications include #8 AWG to 600 kcmil copper lugs and splices (YA and YS), #8AWG, to 350 kcmil aluminum lugs and splices (YA-A and YS-A) and up to 4/0 aluminum tap connections.

The PAT600-LI is supplied with a durable high impact formed carrying case to hold the tool, battery charger, two 18 volt Lithium-Ion batteries and tool retention lanyard. All BURNDY® PATRIOT® 18V series tools are provided with a 5-year limited warranty on the tool and a 1-year warranty on batteries and chargers. All PATRIOT® tools features the BURNDY® INFINITY DRIVE® transmission which has a lifetime warranty.

Features and Benefits

- Refined hydraulic system for ultra performance, speed and reliability
- Field proven electronics for ultimate reliability in the harshest environments
- Overmolded handle for comfort and improved grip; allows for one-handed operation for advance, retract and hold
- 18-volt Lithium-Ion batteries provide 2.5 times more charge/discharge cycles than traditional Ni-Cd batteries and provide 430% more lifetime work
- 30-minute charger controls current, voltage and temperature to maximize battery life
- Forced air cooling fan cools the battery by forcing cool air through the battery's built in air vents
- Specialized latch design allows interference free closure on tap connections
- Permanent "D3" crimp grooves accepts "W", "X" and "W-VT" dies
- **PAT600C-LI** with covered head is available
- State of the art crimping head design, 180° head rotation lets user get into tight areas easier
- Ergonomically balanced tool design eases operation and helps lessen fatigue

SPECIFICATIONS

Output Force:	6 tons (5.4 metric tons)
Tool Weight:	10.1 lbs (4.5 kg) With Battery
Length:	14.5" (36.8 cm)
Width:	3.5" (8.9 cm)
Height:	13.7" (34.9 cm)
Operating Voltage:	18 V-DC
Recharge Time:	30 minutes

FOR USE ON

Copper #8-600 kcmil	**Terminals:** YA, YA-L **Splices:** YS-L, YS, YS-T, Y-R
Copper Flex #8-350 kcmil Flex	**Terminals:** YA-FX, YAV, YA-L-FX **Splices:** YS, YSV-FXB
Aluminum #8-350 kcmil	**Terminals:** YA-A, YA-A-TN **Splices:** YS-A

ACCESSORIES

Battery:	Cat# **BAT18VLI** (3.0 AH) Hi-capacity
Chargers:	
120V-AC	Cat# **PATCHGR-LI**
12/24V-DC	Cat# **PATCHGR-LIDC**
W Die Holder	Cat# **WDIETREE**
Lanyard:	Cat# **PT208620**

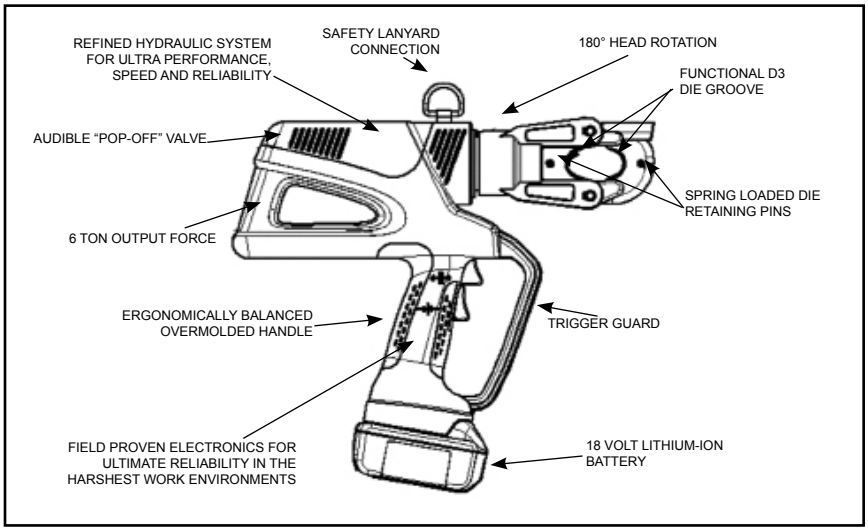

PATRIOT® PAT600-18V

BATTERY ACTUATED TOOL

Hydraulic Self-Contained
6-Ton Crimping Tool

The BURNDY® PAT600-18V battery powered crimping tool provides a powerful 6 tons of crimping force and completes a crimp in approximately 3 seconds. The PAT600-18V is compact, easy to use and incorporates the latest in battery tool technology. The PAT600-18V tool incorporates a specialized latch style head with enhanced working stroke and clearance capabilities. The specialized head allows interference-free closure on tap connections up to the BURNDY® YHD-400 size including 350 kcmil aluminum connectors. Die selection with this tool includes all BURNDY® "W" and "W-VT" style dies which seat in the permanent "D3" crimping groove. Installation applications include #8 AWG to 600 kcmil copper lugs and splices (YA and YS), #8 AWG to 350 kcmil aluminum lugs and splices (YA-A and YS-A), and up to 4/0 aluminum tap connections. The permanent "D3" groove and 180 degree rotatable head are standard on the PAT600-18V.

Each PAT600-18V tool uses BURNDY® dies and off-the-shelf connectors available worldwide. The PAT600-18V comes equipped with a high impact formed carrying case to hold the tool, a battery charger and two batteries.The case houses up to 10 "W" dies (dies purchased separately). The PAT600-18V uses industry standard batteries and chargers.The PAT600-18V comes complete with a 5-year limited warranty and 1-year on batteries and charger.

Features and Benefits

- Battery powered crimp technology
- Advance design high speed pump completes crimp in approximately 3 seconds
- Ergonomic design allows one hand operation for ram advance and ram retraction
- Variable speed trigger
- Ram holds position when trigger is released
- Mechanical ram release
- Specialized latch head design for enhanced clearance on tap connectors
- 180 degree head rotation
- Uses 18 volt Ni-MH batteries
- Audible pressure "pop-off" valve
- Permanent D3 crimp groove accepts all "W-Dies"
- **PAT600C-18V** with covered head is available
- Durable high impact formed carrying case
- 5-year limited warranty on tool, 1-year on batteries and charger

SPECIFICATIONS

Crimp Force:	6 tons (5.4 metric tons)
Tool Weight:	10.9 lbs (4.9 kg) With Battery
Length:	14.5 in (36.8 cm)
Width:	3.5 in (8.9 cm)
Height:	13.75 in (34.9 cm)
Operating Voltage:	18 V-DC
Crimp Time:	Approx. 3 seconds
Recharge Time:	< 45 minutes

FOR USE ON

Copper, Aluminum, ACSR. Steel, Copperweld, Alumoweld, 6201, 5005, Compressed, Compact, Stranded & Solid

Installs Splices, Taps and Terminations:

#8 - 600 kcmil Copper Stranded
(YA, YA-L, YS, YS-L)
#8 - 350 kcmil Flex
#8 - 350 kcmil Aluminum (YA-A, YS-A)

ACCESSORIES

Battery:	Cat# **BAT18V** (2.6 AH) Hi-capacity Ni-MH
W Die Holder	Cat# **WDIETREE**
Chargers:	
120V-AC	Cat# **PATCHGR18V**
12/24V-DC	Cat# **BCT/PATDCCHGR**
240/250V-AC	Cat# **PATCHGR250V**
Lanyard:	Cat# **PT208620**

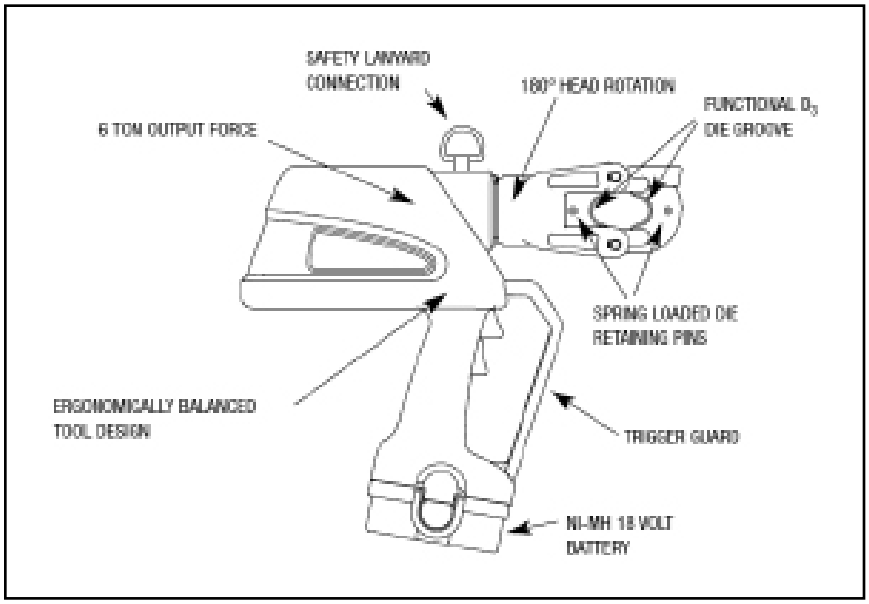

PATRIOT® IN-LINE® HIGH PERFORMANCE PATMD6-LI SERIES

18 Volt Lithium-Ion Battery Actuated Tool

Hydraulic Self Contained
6-Ton Crimping Tool

The BURNDY® PATRIOT® High Performance IN-LINE® series of tools are approximately 80% faster than previous models. In addition to faster crimp cycles, the high performance IN-LINE® PATMD6-LI series is offered with 18 volt Lithium-Ion technology.

The BURNDY® High Performance IN-LINE® tools are battery actuated and can be operated with one hand allowing for advance, retract and hold functions for easier operation. One hand operation allows the operator one free hand to position the connector and conductor while crimping. The PATMD6-LI series of tools complete a crimp (YS28 4/0 copper cable) in approximately 2 seconds. This design provides a consistent, reliable connection every time.

The High Performance IN-LINE® tools feature interchangeable MD6 series jaws, capable of using "W" and "X" style dies in the permanent D3 groove. The PATMD6-K-LI accepts KEARNEY™ type "O" dies and BURNDY® "W" and "X" style dies with KWADP adapter. When ordering choose the tool that best suits your crimping needs. The IN-LINE® tools feature 350° rotatable heads for operation in virtually any position.

Each High Performance IN-LINE® tool uses standard BURNDY® dies and off-the-shelf connectors available world-wide. IN-LINE® tools are supplied with a durable vinyl tool bag, battery charger and two batteries.

KEARNEY™ is a registered trademark of COOPER TECHNOLOGIES COMPANY.

Features and Benefits

- 18 volt Lithium-Ion batteries provide 2.5 times more charge/discharge cycles than traditional Ni-Cd batteries and provide 430% more lifetime work
- Overmolded handle for comfort and improved grip even when wearing gloves
- 30-minute battery charger controls current, voltage and temparature to maximize battery life
- True, one handed operation for advance, retract and hold
- Pressure "pop-off" valve indicates completion of crimp
- Interchangeable scissor action crimp jaws allow easier access to tight spaces
- Ram holds position when trigger is released to allow the operator to check alignment prior to crimping
- Ergonomically balanced tool design helps lessen operator fatigue
- High capacity 3.0 AH batteries provide more crimps per charge
- 5-year limited warranty on tool
- Lifetime warranty on INFINITY DRIVE®
- 1-year warranty on batteries and charger

PATRIOT® IN-LINE® Cut/Crimp Kits:

All with Cutter Jaws, 2 Batteries and Charger

PATMD6LICUTKIT1	BG & D3 Grooves, hard case
PATMD68LICUTKIT1	O & D3 Grooves, hard case
PATMD66LICUTKIT1	D3 Groove (snub), hard case
PATMD6LIWCJ	BG & D3 Grooves, soft case
PATMD66LIWCJ	O & D3 Grooves, soft case
PATMD68LIWCJ	D3 Groove (snub), soft case

SPECIFICATIONS

Output Force:	6 tons (5.4 metric tons)
Tool Weight:	7.8 lbs (3.5kg) With Battery
Length:	20.91" (53.11 cm)
Width:	3.69" (9.37 cm)
Height:	5.48" (13.91 cm)
Operating Voltage:	18 V-DC
Recharge Time:	30 minutes

FOR USE ON

Copper, Aluminum, ACSR, Steel, Copperweld, Alumoweld, 6201, 5005, Compressed, and Compact conductors
Copper Taps: #10 solid - 2/0 stranded
Aluminum and ACSR Taps: #14 solid - 4/0 ACSR
Stirrups: #6 - 4/0 ACSR
Overhead Full Tension Deadends, Full Tension Splices and Terminals: #10 stranded - 4/0 ACSR
Installs splices, taps or terminations:
#8 - 500 kcmil Copper Stranded (YA, YA-L, YS, YS-L)
#8 - 350 kcmil Copper Flex
#8 - 350 kcmil Aluminum (YA-A, YS-A)

Interchangeable Jaw Assemblies:

PATJAWSMD6	BG and D3 Grooves
PATJAWSMD6-8	O and D3 Grooves
PATJAWSMD6-6	D3 Groove only (snub-nose)
PATJAWSMD6K	KEARNEY™ Groove (snub)
PATJAWSCUT	Cutter Jaw Set

Jaw Covers: **PATMD6JC, PATMD66JC, PATMD6KJC**

ACCESSORIES

Battery:	Cat# **BAT18VLI** (3.0 AH) Hi-capacity LI
Chargers:	
120V-AC	Cat# **PATCHGR-LI**
12/24V-DC	Cat# **PATCHGR-LIDC**
Cutter Dies:	Cat# **W28K** For cutting 4 - 4/0 Copper, Aluminum and ACSR

PATRIOT® IN-LINE® VARIATIONS:

PATMD6-LI	BG and D3 Grooves
PATMD6-8-LI	O and D3 Grooves
PATMD6-6-LI	D3 Groove only (snub-nose)
PATJMD6-K-LI	KEARNEY™ Groove (snub) (KEARNEY™ O dies; BURNDY® W and X with KWADP adapter)

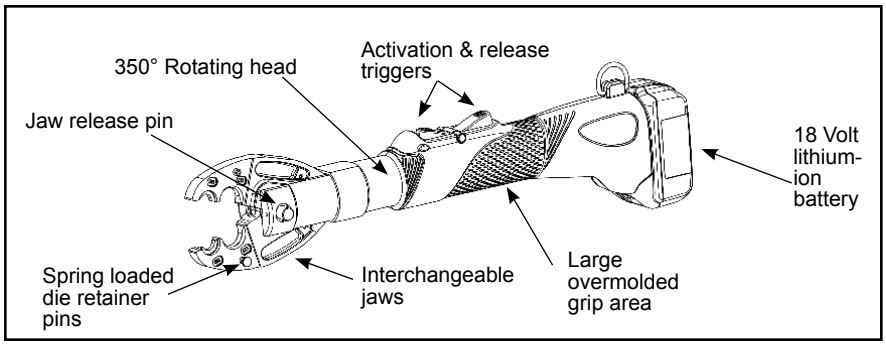

PATRIOT® IN-LINE® PATMD6-14V SERIES HIGH PERFORMANCE

BATTERY ACTUATED TOOL

Hydraulic Self Contained
6-Ton Crimping Tool

The BURNDY® PATRIOT® High Performance PATMD6-14V series of tools are approximately 80% faster than previous models. In addition to faster crimp cycles, the High Performance PATMD6-14V series tools have newly designed electronics that are field proven for ultimate reliability to handle the harshest work environments.

The BURNDY® High Performance IN-LINE® tools are battery actuated and can be operated with one hand allowing for advance, retract and hold functions for easier operation. One hand operation allows the operator one free hand to position the connector and conductor while crimping. The High Performance PATMD6-14V series of tools incorporate a high speed hydraulic pump generating 6 tons of crimping force and completes a crimp (YS28 4/0 copper cable) in approximately 2 seconds. This design provides a consistent, reliable connection every time.

The High Performance IN-LINE® tools feature interchangable MD6 series jaws, capable of using "W" and "X" style dies in the permanent D3 groove. The PATMD6-K-14V accepts KEARNEY™ type "O" dies and BURNDY® "W" and "X" style dies with KWADP adapter. The IN-LINE tools feature 350° rotatable heads for operation in virtually any position.

Each High Performance IN-LINE® tool uses standard BURNDY® dies and off-the-shelf connectors available world-wide. IN-LINE® tools are supplied with carrying case, battery charger, two batteries and die compartment to hold dies. (Dies are sold separately.)

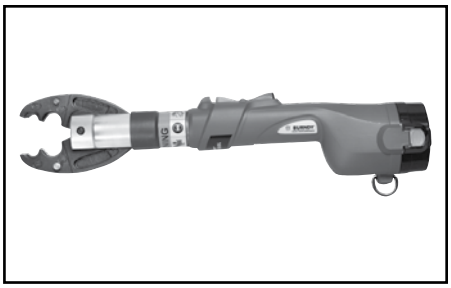

Features and Benefits

- Refined hydraulic system for ultra performance, speed and reliability.
- Field proven electronics for ultimate reliability in the harshest environments.
- Pressure "pop-off" valve indicates completion of crimp.
- Interchangeable scissor action crimp jaws allow easier access to tight spaces.
- Ram holds position when trigger is released to allow the operator to check alignment prior to crimping.
- Large hand grip area allows easier operation with gloves.
- Ergonomically balanced tool design helps lessen operator fatigue.
- Durable high impact formed carrying case.
- High capacity 2.6 AH batteries provide more crimps per charge.
- 5-year limited warranty on tool.
- Lifetime warranty on INFINITY DRIVE®
- 1-year warranty on batteries and charger

KEARNEY™ is a registered trademark of COPPER TECHNOLOGIES COMPANY.

PATRIOT® IN-LINE® VARIATIONS:

PATMD6-14V	BG and D3 Grooves
PATMD6-8-14V	O and D3 Grooves
PATMD6-6-14V	D3 Groove only (snub-nose)
PATJMD6-K-14V	KEARNEY™ Groove (snub) (KEARNEY™ O dies; BURNDY® W and X with KWADP adapter)

SPECIFICATIONS

Output Force:	6 tons (5.4 metric tons)
Tool Weight:	7.8 lbs (3.5kg) With Battery
Length:	20.91" (53.11 cm)
Width:	3.69" (9.37 cm)
Height:	5.48" (13.91 cm)
Operating Voltage:	14.4 V-DC
Recharge Time:	< 45 minutes

FOR USE ON

Copper, Aluminum, ACSR, Steel, Copperweld, Alumoweld, 6201, 5005, Compressed, and Compact conductors
Copper Taps: #10 solid - 2/0 stranded
Aluminum and ACSR Taps: #14 solid - 4/0 ACSR
Stirrups: #6 - 4/0 ACSR
Overhead Full Tension Deadends, Full Tension Splices and Terminals: #10 stranded - 4/0 ACSR
Installs splices, taps or terminations:
#8 - 500 kcmil Copper Stranded (YA, YA-L, YS, YS-L)
#8 - 350 kcmil Copper Flex
#8 - 350 kcmil Aluminum (YA-A, YS-A)

ACCESSORIES

Battery:	Cat# **BAT14V** (2.6 AH) Hi-capacity Ni-MH
Chargers:	
120V-AC	Cat# **PATCHGR18V**
12/24V-DC	Cat# **BCT/PATDCCHGR**
240/250V-AC	Cat# **PATCHGR250V**
Cutter Dies:	Cat# **W28K** For cutting 4 - 4/0 Copper, Aluminum and ACSR

Interchangeable Jaw Assemblies:

PATJAWSMD6	BG and D3 Grooves
PATJAWSMD6-8	O and D3 Grooves
PATJAWSMD6-6	D3 Groove only (snub-nose)
PATJAWSMD6K	KEARNEY™ Groove (snub)
PATJAWSCUT	Cutter Jaw Set
Jaw Covers:	**PATMD6JC, PATMD66JC, PATMD6KJC**

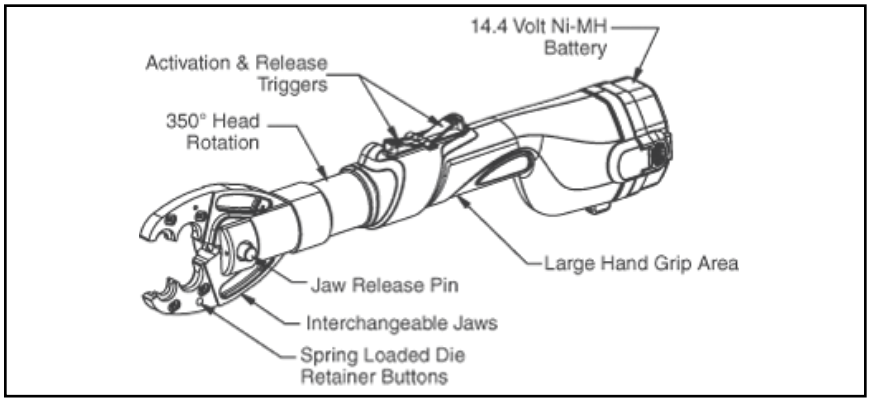

Y750HSXT AND Y750CHSXT RUBBER COVERED HEAD

750 REVOLVER HYPRESS™

Hydraulic Hand Operated Tool
12-Ton Crimp Force

Conductor Range:
#14 - 750 kcmil Cu/Al
#4 - 556.5 kcmil ACSR

The BURNDY® Y750HSXT Series HYPRESS™ is a wide mouth (1.65") hand operated hydraulic 12 ton crimping tool for use on virtually all compression applications. The C-shaped head rotates 355° relative to the handle and is mated to a patented rapid advance pump. The Y750HSXT provides easy tapping, splicing, and terminating of overhead lines, the full line of HYGROUND® compression grounding connectors, NEC cable connections, and N30 - N650 Navy cable connections.

The Y750HSXT accepts all BURNDY® "U" dies for use on conductor ranges of #14 - 750 kcmil AL/CU and #4 - 556.5 kcmil ACSR conductors.

The Y750CHSXT HYPRESS™ has a rubber covered head and handles for tool impact protection.

Each Y750HSXT uses standard BURNDY® dies and off-the-shelf connectors available world-wide. Supplied with a durable high impact formed carrying case to hold the tool, and die compartment to hold "U" die sets. (Dies sold separately.) All BURNDY® Y750HSXT series tools are provided with a 5-year limited warranty.

Features and Benefits

- Covers a wide range of applications with a lightweight, self-contained system and provides easy tool removal from continuous conductors with its C-shaped head
- Easy tool positioning with its 355° head rotation
- Patented rapid advance pump for faster crimps
- Exposed positive die lock buttons for easy die change out and die retention
- Handle trigger drain for convenient ram retraction
- Quality assurance is provided with an audible "Pop-Off" pressure relief valve
- Comfort grip handles help ease operator fatigue with continuous use
- Long life expectancy from the company that provided the industry with the first self-contained hydraulic tool in 1934
- Rubber covered head and handles on **Y750CHSXT** for tool impact protection
- Supplied with high impact plastic carrying case
- 5-year limited warranty

SPECIFICATIONS

Force developed:	12 tons
Weight:	14.5 lbs (6.6 kg)
Length:	23.96" (608 mm)
Height:	2.86" (78 mm)
Width:	8.71" (222 mm)
Jaw opening:	1.65" (42 mm)

FOR USE ON

- Tension Sleeves

Copper	#8 sol. - 500 kcmil
Aluminum	#8 sol. - 556.5 kcmil
ACSR	#4 - 556.5 kcmil

- Taps

Copper	#14 sol. - 500 kcmil
Aluminum	#8 - 500 kcmil

- Aerial Cable

Copper	#6 - 500 kcmil

- Terminals & Splices

Aluminum	#8 - 750 kcmil
Copper	#8 - 750 kcmil
ACSR	#4 - 556 kcmil

- HYGROUND® (Compression Grounding)

Copper	#8 - 500 kcmil (cable/ground rod)
Ground Rods	1/2" - 1" Diameter

ACCESSORIES:

Cat. No.	Description
Y750HSCASE	Plastic Carrying Case for Y750HSXT or Y750CHSXT.
FORCEGAUGE12-15	Force test gauge for accurate visual reading of output force.
PT29291	Die Case Steel case for storage and protection of "U" dies.
WIREMIKE	Provides quick and easy identification of commonly used conductors.

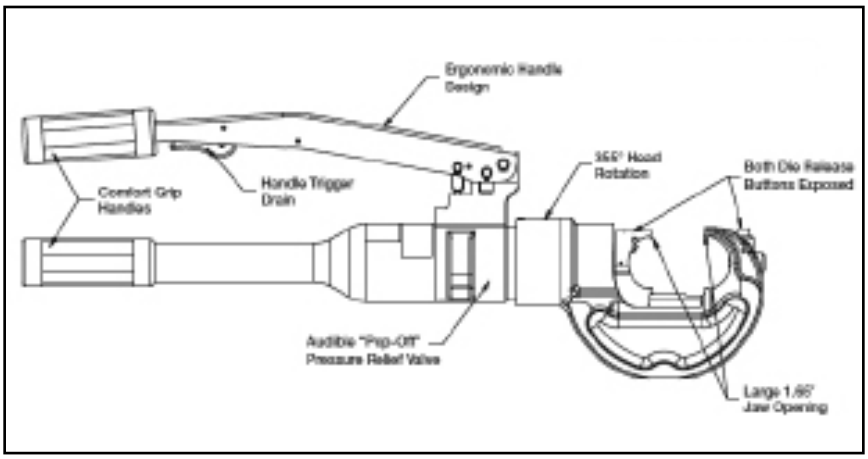

Y35 AND Y35-2

HYPRESS™

Hand-Operated Hydraulic Tool

The Y35 HYPRESS™ Tool incorporates a C-shaped, rotatable head for overhead line work and compression grounding applications. The hook style head with extensive ram travel provides for easy tapping and splicing of overhead lines as well as HYGROUND® compression grounding systems.

The Y35-2 HYPRESS™ head, body and handles are covered with 3/16" rubber for tool impact protection.

Order the hot-line handle assembly, "U" dies and accessories separately. 5-year limited warranty.

Features and Benefits

- Compact "C" shaped head allows easy placement and removal from continuous conductor lengths
- Easy to position tool for work with 180° head rotation
- Versatile and economical-tool works with all commonly used copper, aluminum and ACSR conductors from #6 str. to #556.5 26/7 stranding
- Body and handles covered with 3/16" molded rubber for tool impact protection
- Easy die change accomplished with push button die locks
- Quality assurance is provided with automatic 10,000 PSI blow-off pressure release valve for positive crimping

(Continued)

- Rapid ram advance reduces installation time by eliminating need to pump handles to advance ram to connector
- Saves installation time with trigger controlled return release which returns ram to its preset starting point
- Long continuous usage is aided with comfort grip handles
- Compression terminal and splice connectors are UL Listed and CSA Certified when installed with recommended die set
- 5-year limited warranty

SPECIFICATIONS

	Y35	Y35-2
Force developed:	12 tons	12 tons
Operating pressure:	10,000 PSI	10,000 PSI
Weight (less case):	13 lbs.	13-1/2 lbs
Overall length:	23-1/4"	24"
Head width:	4-3/4"	6"
Molded Covering:	Body & Handles	Head, Body and Handles

FOR USE ON

Copper #8 str.-500 kcmil Code Cables	Terminals-grounding YGH, YGHA, YGF Splices-grounding YGS, YGHS
Copper #8 str.-500 kcmil and up to 3/4" ground rod	Taps-grounding YGHC-C, YGHP-C YGHR-C
Copper #8 str.-750 kcmil Code Cables N30-N500 Navy Cables Flexible and Extra Flex	Terminals Uninsulated YA, YA-2N, YA-L, YA-LB YA-2LN Terminals Insulated YAEV-L Box, YAEV-L YAEV-H, YAEV-RS, YAEV-RH Splices To Size 400 kcmil YS, YS-T, YS-L YS-LB, YSV-L Box YSV-L, YSM
Aluminum #8 str.-750 kcmil Code Cables	Terminals YA-A AYP, AYPO Splices To Size 350 kcmil YSA, YRB, YS-AT
ACSR	See Burndy Overhead Transmission and Distribution Catalog Module

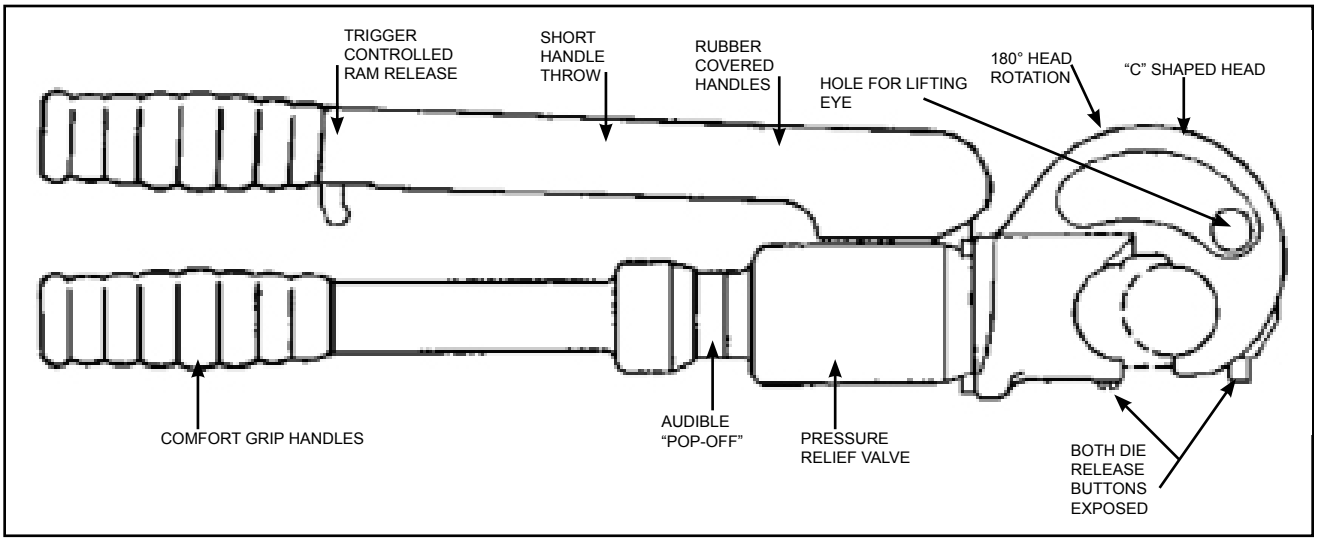

Y35 SERIES ACCESSORIES

PT 29279-2 Force Test Gauge

The PT 29279-2 Force Test Gauge is designed to provide an accurate visual reading of the output force produced by the hand-hydraulic Y35, Y35-2, Y39 and Y750 HYPRESS™ tools. It is not recommended for any remote powered HYPRESS™ heads such as the Y35BH. The PT29279-2 Force Test Gauge is factory calibrated and inspected to very stringent tolerances providing the customer accuracy and an excellent means for quality assurance control. Supplied with padded storage case.

Features and Benefits

- Easy to read dial
- Provides means for quality assurance control
- Blank (test) "U" dies are provided for testing procedure
- Tool output force is applied to load cell for visual read out of the resulting force on the dial
- An easy to read operating and maintenance manual is included

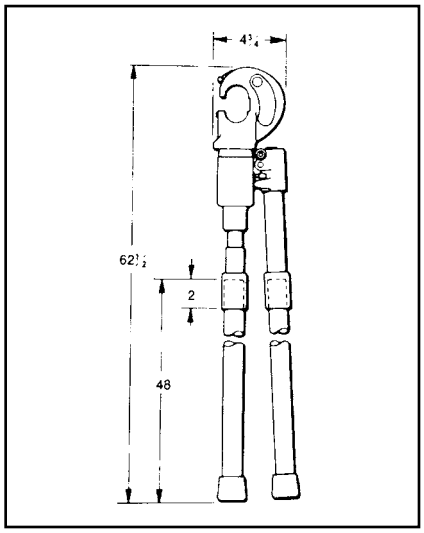

Cat. No. **HH5-RL48** Hot-Line Handle Assembly

The HH5-RL48 is a 48" long fiberglass handle assembly that easily attaches to a standard Y35 HYPRESS™ tool. Rotation of the handles controls the rapid ram advance and release mechanisms. The handles are rated at 100KV per foot for five minutes. The Catalog Number does not include the Y35. For factory assembled unit order Catalog Number **Y35-16.**

Cat. No. **PT6733** Hot-Line Tool (Heavy-Duty) Carrying Bag

The PT6733 is a heavy-duty, adjustable canvas bag for the storage and protection of hot-line tools. The bag accommodates 48" through 72" variations of the Y35 and MD6 hot-line tools.

Cat. No. **PT29291** Die Case

Steel case designed for storage and protection of "U" dies used with the Y35 and other BURNDY® tools. Holds 15 die sets. Length 9-1/2", width 6", height 1-1/2". Dies sold separately.

Y34A Indentor Adaptor:
To use Y34A indentors in a Y35, Y39, or Y750 tool.
Cat. No. **Y35P3**

Seal Repair Kit:
Cat. No. **Y35/Y39 REP KIT A**

Steel Carrying Cases:
Cat. No. **PT2972** for Y35
Cat. No. **PT29360** for Y35-2

Y39

HYPRESS™

Hand-Operated Hydraulic Tool

The versatile, lightweight Y39 weighs 13 lbs. and its small 3-1/8" wide head rotates 180° for convenience and flexibility. The tool provides 12 tons of crimping power, while its built-in overload valve automatically releases pressure when the crimp is completed.

The Y39 is designed for easy die insertion and removal without ball checks or set screws. Its rapid ram advance and trigger-controlled release eliminate unnecessary pumping after every crimp. 5-year limited warranty.

SPECIFICATIONS

Force developed:	12 tons
Operating force:	10,000 PSI
Weight-less case:	12 lbs
Overall length:	23"
Max. head width:	3-1/8"
Die accommodation:	U-dies

FOR USE ON

Copper
#6 AWG -750 kcmil str.
Code Cable
N30 - N650 Navy Cable
Flexible and Extra Flexible
Terminals -Uninsulated
YA, YA-L, YA-LB, YGH, YGHA
Splices & Tees - Uninsulated
YS, YS-L, YS-LB, YS-T, YSP-T, YST

Copper- AN or AIR
#6 AWG-#4/0 str. Code Cable
AN6-AN #4/0 Aircraft Cable
Flexible and Extra Flexible
Terminals - Uninsulated
YAV-L Box, YAV-L, YAV-RS Box, YAV-RS
Splices - Uninsulated
YSV-L Box, YSV-L

Copper-Insulated Terminals
#8 AWG - #2/0 str. Code Cable
AN8 - AN #2/0 Aircraft Cable
Flexible and Extra Flexible
Terminals-Insulated
YAEV-L Box, YAEV-L, YAEV-RS Box, YAEV-RS, YAEV-RH

Copper-Taps
#12 AWG Solid-250 kcmil
Taps: YC-C, YGHC -C, YGHP -C, YGHR -C

Aluminum
#8 AWG-750 kcmil str.
Code Cable
Terminals: YA-A
Splices: YS-A, YS-AT, YRB

Aluminum
#6 str.-500 kcmil
Taps: YFD, YFN, YFO

Features and Benefits

- Easy to work in small tight spaces with only a 3-1/8" wide compression head and short handle throw
- Easy to position tool for work with 180° head rotation
- Versatile and economical tool works on all commonly used copper and aluminum conductors from #6 str. to 750 kcmil
- Body and handles covered with 3/16" rubber
- Easy to locate and hold dies in position with the positive push button die locks plus die changing is accomplished easily without ball checks or set screws
- Easy to remove or lock into position die holder with recessed spring latch plus leather strap to prevent loss
- Quality assurance is provided with automatic 10,000 psi “blow off” pressure release valve for positive crimping

(Continued)

- Rapid ram advance elmininates requirement for pumping handles to advance ram to connector
- Trigger release allows ram to return to preset position
- Long continuous usage is aided with
- comfort grip handles
- Compression terminal, tap and splice connectors are UL Listed and CSA Certified when installed with the Y39 tool and recommended die set
- 5-year limited warranty

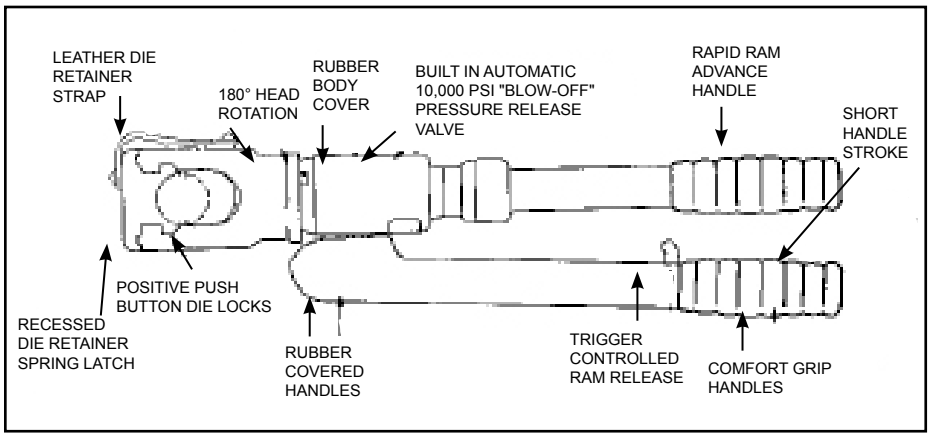

Y644HSXT DIELESS HYPRESS™

THE "1" CRIMP RANGE TAKING TOOL

Hydraulic Hand Operated Tool
11-Ton Crimp Force

#6 - 1000 kcmil Copper HYLUG™ Terminals and HYLINK™ Splices

#6 - 750 kcmil Aluminum HYLUG™ Terminals and HYLINK™ Splices

The Y644HSXT dieless HYPRESS™ is a hand operated 11 ton hydraulic crimping tool. Only 1 crimp is required for each wire termination for both long and standard length barrels on HYLUG™ terminals and HYLINK™ splices.

The Y644HSXT has a latch style head which provides easy tool removal from continuous conductor runs. The head rotates 355° relative to the handles and is mated to a patented rapid advance pump. The Y644HSXT weighs only 15 pounds and delivers 11 tons of crimping force. The result is easy terminating and splicing using BURNDY® HYLUG™ and HYLINK™ terminals and splices.

Features and Benefits

- Dieless system, eliminates the need to purchase and maintain dies
- Patented rapid advance pump for faster crimps
- Pressure relief "Pop-Off" valve provides audible indication that crimp is complete
- Handle trigger drain for convenient ram retraction
- 355° head rotation for versatile tool head positioning in tight areas
- Easy inspection and positive identification is provided with the BURNDY® "S"
- Comfort grip handles help ease fatigue with continuous use
- Supplied with high impact plastic carrying case
- 5-year limited warranty

SPECIFICATIONS

Output Force:	11 tons
Tool Weight:	15 lbs (5.6 kg)
Length:	23.20" (589 mm)
Height:	3.00" (76 mm)
Width:	7.04" (179 mm)

FOR USE ON

AWG/kcmil Size Range	Connector Type
Copper #6 - 1000 kcmil	Terminals YA-L, YA-2LN, YA, YA-FXB YA-2N, YA-L-2TC, YA-L-FX YAB-4N, YA-L-TC, YA-2L, YA-4N, YEV-P-FX, YE-P, YE-P-FX Splices YS-L, YS, YS-T
Aluminum #6 - 750 kcmil	Terminals YA-A, YA-A-TN Splices YS-A
Aluminum #6 - 750 kcmil	HYPLUG™ AYP, AYPO

ACCESSORIES

Cat. No.	Description
WIREMIKE	Provides quick and easy identification of commonly used conductors.
Y644HSCASE	Plastic carrying case.

Aluminum Connectors		Copper Connectors	
Standard Wire Size	**Expanded Wire Range**	**Standard Wire Size**	**Expanded Wire Range**
#6 AWG	#6 AWG	#6 AWG	#6 AWG
#5 AWG	#5-#6 AWG	#5 AWG	#5-#6 AWG
#4 AWG	#4-#6 AWG	#4 AWG	#4-#6 AWG
#3 AWG	#3-#6 AWG	#3 AWG	#3-#6 AWG
#2 AWG	#2-#6 AWG	#2 AWG	#2-#6 AWG
#1 AWG	#1-#2 AWG	#1 AWG	#1-#2 AWG
1/0 AWG	1/0-#1 AWG	1/0 AWG	1/0-#6 AWG
2/0 AWG	2/0-#1 AWG	2/0 AWG	2/0-#4 AWG
3/0 AWG	3/0-#1 AWG	3/0 AWG	3/0-#2 AWG
4/0 AWG	4/0-#1 AWG	4/0 AWG	4/0-#1 AWG
250 kcmil	250-1/0 AWG	250 kcmil	250-1/0
300 kcmil	300-2/0 AWG	300 kcmil	300-2/0
350 kcmil	350-3/0 AWG	350 kcmil	350-3/0
400 kcmil	400-4/0 AWG	400 kcmil	400-4/0
500 kcmil	500-4/0 AWG	500 kcmil	500-4/0
600 kcmil	600-250 kcmil	600 kcmil	600-250
750 kcmil	750-500 kcmil	750 kcmil	750-500
		800 kcmil	800-500
		1000 kcmil	1000-750

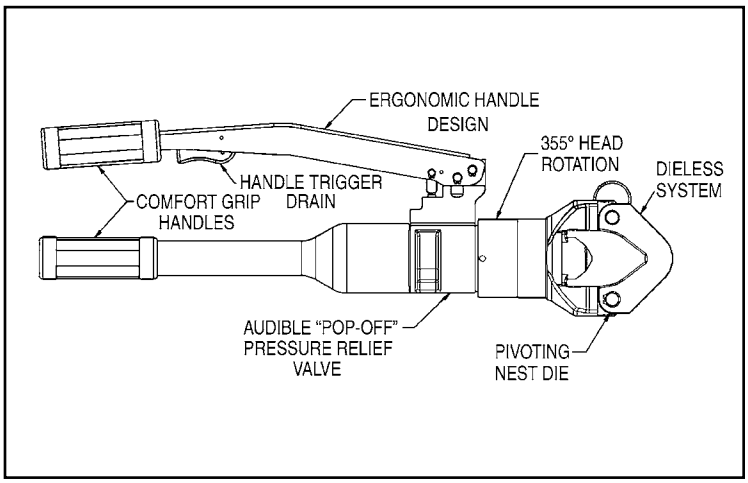

Y644HSXT Dieless HYPRESS™ Range Taking Capabilities. The following size HYDENT™ lugs and two way splices, when crimped with the Y644HSXT Dieless HYPRESS™ Tool, produce the following UL Listed range taking capabilities, see chart to the left.

4-POINT® Y81KFT

DIELESS HYPRESS™

Hydraulic Hand Operated Crimping Tool

#8 – 1000 kcmil Copper HYLUG™ Terminals and HYLINK™ Splices

#8 – 750 kcmil Aluminum HYLUG™ Terminals and HYLINK™ Splices

The Y81KFT 4-POINT® dieless HYPRESS™ is a hand operated 6 ton hydraulic crimping tool for use on a wide variety of terminal and splice compression applications. The Y81KFT incorporates a dieless latch style head that provides easy tool removal from continuous conductor runs and eliminates the need to purchase and maintain dies. The head rotates 360° relative to the handles and is mated to a patented rapid advance pump. The Y81KFT weighs only 12 pounds and delivers 6 tons of crimping force. The result is easy termination and splicing using BURNDY® HYLUG™ and HYLINK™ terminals and splices.

The Y81KFT is supplied with a molded high impact plastic case and comes complete with a 5-year limited warranty.

Y81KFT dieless HYPRESS™ Range Taking Capabilities: The Y81KFT provides range taking capabilities that is UL Listed and CSA Certified for Copper (Code, Compact and Flex) and Aluminum (Code and Compact) conductors when used in conjunction with BURNDY® HYLUG™ terminals and HYLINK™ splices. See chart for connector, conductor and range taking combinations in section C.

Features and Benefits

- Dieless installation system
  - ◊ Eliminates the need to purchase and maintain dies
- UL Listed and CSA Certified with Range Taking Capabilities
  - ◊ Provides the installer with a UL Listed and CSA Certified crimps with Range Taking Capabilities when used in conjunction with BURNDY® HYLUG™ Terminals and HYLINK™ Splices
- Flip top head design
  - ◊ For easy loading and removal of installed terminals and splices, saving time
- Audible pressure "pop-off" valve and die embossment providing 360° inspectability
  - ◊ Assures proper crimps with both audible and visual indicators for the installer
- Handle Trigger release
  - ◊ Convenient ram release located in the handle

SPECIFICATIONS

Output Force:	6 tons (12,000 lbs) (5450 kg)
Weight:	12 lbs (5.45 kg)
Length:	25.6" (650 mm)
Height:	7.7" (196 mm)
Width:	2.5" (64 mm)

FOR USE ON

Copper, Aluminum, Compressed, Compact, Stranded, Solid and Flex Conductors.

Installs Splices, Taps and Terminations:

#8 - 1000 kcmil Copper
(YA, YA-L, YS, YS-L, YS-T, Y-R)
#8 - 777.7 (750 Nom. Flex Wire Size) kcmil Flex
(YA-FX, YAV, YA-L-FX, YS, YSV-FXB)
#8 - 750 kcmil Aluminum
(YA-A, YS-A)
#8 - 750 kcmil Aluminium Pin Adapters
(AYP, AYPO)

- Advanced high speed pump design
  - ◊ Provides fast crimps, longer life, efficiency, and reliability
- 360 Degree head rotation
  - ◊ Versatile tool head positioning lets the user get into tight areas easier
- Durable high impact formed carrying case
  - ◊ Provides tool protection and stores all accessories
- 5-year limited warranty
  - ◊ Customer satisfaction and support

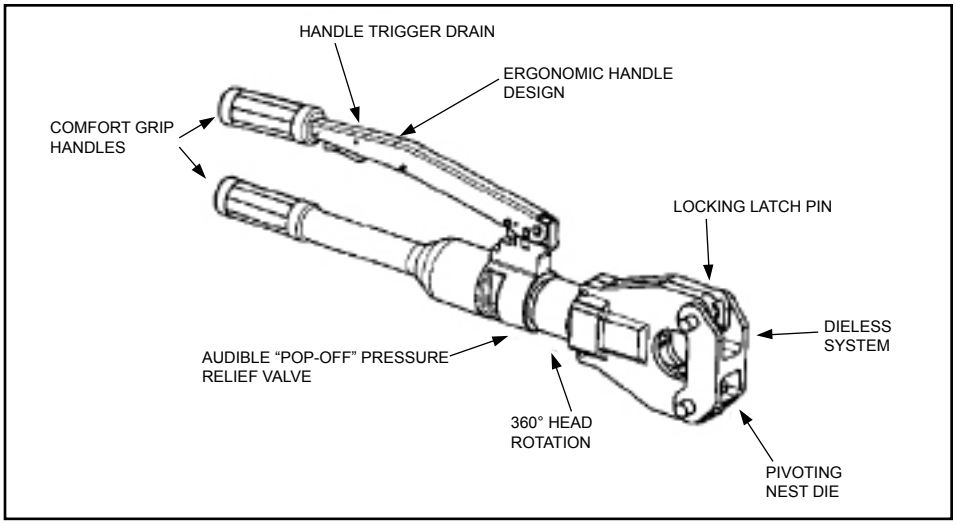

4-POINT® Y4PC834

DIELESS HYPRESS™

Hydraulic Hand Operated Crimping Tool

The 4-POINT® C-shaped head dieless HYPRESS™ is a hand operated 6 ton hydraulic crimping tool for use on a wide variety of tap, terminate, and splice compression applications. The dieless capability of this tool eliminates the need to purchase or maintain additional dies. The Y4PC834 incorporates a C-shaped head design making it ideal for crimping in tight areas and is easily removed from continuous conductor runs. The head rotates 360° and is mated to a patented rapid advance pump. The Y4PC834 weighs only 12 pounds and delivers 6 tons of crimping force. The result allows for easy tap, termination and splicing of compression connectors.

The Y4PC834 is supplied with a molded high impact carry case and comes with a 5-year limited warranty.

The Y4PC834 provides range taking capabilities that are UL Listed and CSA Certified for Copper (Code, Compact and Flex) and Aluminum (Code and Compact) conductors when used in conjunction with BURNDY® HYLUG™ terminals and HYLINK™ splices as listed in section C of the Master Catalog.

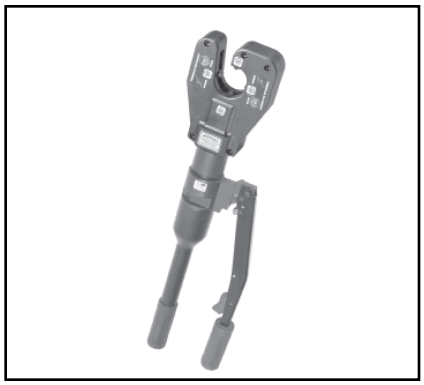

Features and Benefits

- Dieless installation system
  - ◊ Eliminates the need to purchase and maintain dies
- UL Listed and CSA Certified with range taking capabilities
  - ◊ Provides the installer with UL Listed and CSA Certified crimps when used in conjunction with BURNDY® HYLUG™ and HYLINK™ compression connectors
- C-shaped head design
  - ◊ For easily removing tool from continuous run conductors – simply slide the opening of the head off the conductor. Also ideal for use in tight or constraint spaces
- Audible pressure "pop-off" valve and die embossment providing 360° inspectability
  - ◊ Assures proper cimps with both audible and visual indicators for the installer
- Handle Trigger release
  - ◊ Convenient ram release located in the handle

SPECIFICATIONS

Output Force: 6 Tons (5.4 metric tons)
Weight: 11.85 lbs (5.38 kg)
Length: 25.6" (651 mm)
Height: 7.7" (196 mm)
Width: 2.5" (64mm)

FOR USE ON

Copper, Aluminum, Compressed, Compact, Stranded, Solid and Flex Conductors

Installs Splices, Taps and Terminations

#8 – 1000 kcmil Copper (YA, YA-L)
#8 – 500 kcmil Copper (YS, YS-T, YS-L, Y-R)
#8 – 777 (750 Nominal Flex Wire Size) kcmil Flex ((YA-FX, YAV, YA-L-FX)
#8 – 535 (500 kcmil nominal flex wire size) kcmil flex (YS, YS-LB, YSV-FXB)
#8 – 750 kcmil Aluminum (YA-A)
#8 – 350 kcmil Aluminum (YS-A)
#8 – 750 kcmil Aluminum Pin Adaptors (AYP, AYPO)

- Advanced high speed pump design
  - ◊ Provides fast crimps, longer life, efficiency, and reliability
- 360° head rotation
  - ◊ Versatile tool head positioning lets the user get into tight areas easier
- Durable high impact formed carrying case
  - ◊ Provides tool protection and stores all accessories
- 5-year limited warranty
  - ◊ Customer satisfaction and support

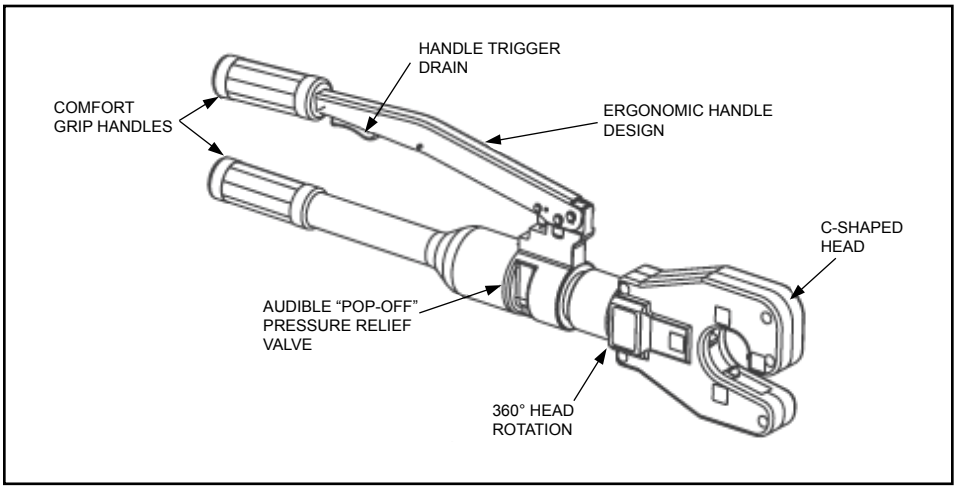

Y500CT-HS

L'IL CRIMP™

6-Ton Hydraulic Crimp Tool

The BURNDY® Y500CT-HS HYPRESS™ connector installation tool provides 6 U.S. Short tons of force in a compact and easy to use, hand-held hydraulic tool. The Y500CT-HS incorporates a specialized latch style head with a generous working stroke for a wide variety of crimping applications. The specialized head allows interference-free closures on tap connectors up to the BURNDY® YHD-400 size. The head is fitted onto a lightweight tool body with handles that are ergonomically designed to provide slip-free grip and easier crimping. The tool features a patented high speed ram advance mechanism that minimizes crimp cycle time along with an ergonomic trigger drain mechanism that allows the ram to return to the preset position. The tool accommodates all BURNDY® "X", "W", and "W-VT" style dies that seat in the permanent "D3" crimping groove. Installation applications include #6 AWG to 500 kcmil copper lugs and splices, #6 AWG to 350 AWG aluminum lugs and splices, and up to 4/0 aluminum tap connections. The permanent "D3" groove and 180 degree rotatable head are standard on the Y500CT-HS.

Each Y500CT-HS HYPRESS™ tool uses BURNDY® dies and off-the-shelf connectors that are available worldwide. The Y500CTHS HYPRESS™ comes equipped with a durable metal carry case to hold the tool and a multitude of die sets.

Features and Benefits

- Lightweight latch head design
  - ◊ Provides enhanced clearance for tap connectors
- 180° head rotation
  - ◊ Versatile tool head allowing user crimp access into tight spaces
- Ergonomic handle design
  - ◊ Easier operation, helping reduce fatigue
- Audible pressure "pop-off" valve
  - ◊ Indicates properly completed crimp
- Permanent "D3" crimp groove accepts all BURNDY® "W" and "X" dies
  - ◊ Standard die design with proven performance
- Durable metal carrying case
  - ◊ Provides superior protection and stores all accessories
- High speed ram advance
  - ◊ Provides faster crimps
- Handle trigger drain
  - ◊ Convenient ram retraction
- 5-year limited warranty
  - ◊ Customer satisfaction and technical support

SPECIFICATIONS

Output Force: 6 tons (5.4 metric tons)
Tool Weight: 7.8 lbs (3.5 kg)
Total Strokes: 7 (w/o connector)
Height: 6.0" (152 mm)
Length: 17.6" (447 mm)

FOR USE ON

Copper, Aluminum, ACSR, Steel, Copperweld, Alumoweld, 6201, 5005, Compressed, Compact, Stranded & Solid conductors

Installs splices, taps, or terminations:
#8 - 500 kcmil Copper Str.
#8 - 350 kcmil Flex
#8 - 350 AWG Aluminum

RANGE TAKING DIES

WDC4500: #4-500 Cu Str.
#2-4/0 Cu Flex
UL and CSA for use on YA and YS series. Also for use on YAV and YSV series.

WDA8300: #8-300 Al
#6-400 Cu Str.
#2-4/0 Cu Flex
UL and CSA for use on YA, YS, YA-A, and YS-A series. Also for use on YAV and YSV series.

Features

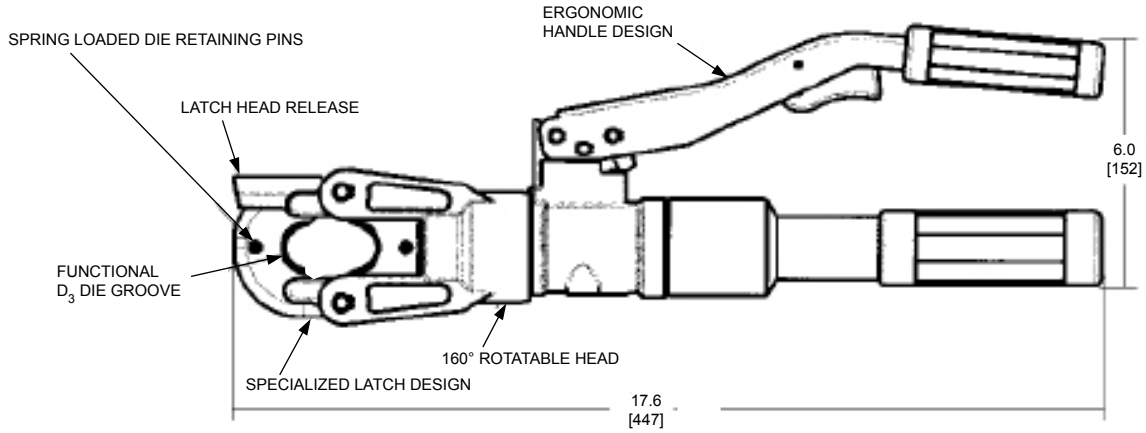

Y60BHU

HYPRESS™

60 Ton Remote
Power Operated Hydraulic Tools

Single Hydraulic Tool Design

The Y60BHU HYPRESS™, single acting is designed to provide fast, easy operation plus a durable and substantially longer design life expectancy. Y60BHU HYPRESS™ tool accommodates "L" dies. The "L" dies are designed for copper and aluminum code cables and aerial conductor sizes through 2500 kcmil and will accommodate ACSR through 2156 (84/19) str. 5-year limited warranty.

Features and Benefits

- Easy to carry with heavy duty handle
- Easy to remove splices with nest that pivots open
- Safety and security is provided with captive locking pin for nest die
- Long life expectancy (50,000 cycles) with heavy duty steel frame
- Fast easy die changing and secure die positioning with positive die release locking pins
- Protected male coupler with captive cap
- Stability is provided with sturdy steel base
- Easy, less costly repairs with fewer parts that are easily accessible (example: Bottom die holder)
- 5-year limited warranty

SPECIFICATIONS

Force devoloped:	60 tons
Operating pressure:	10,000 PSI
Hydraulic oil:	BURNDY® ALFLUID™
Life expectancy:	50,000 cycles min.
Height:	16.62"
Weight (less case):	70 lbs
Shipping weight:	97 lbs

FOR USE ON

Copper
300 kcmil-2000 kcmil
Str. Code Cable
Terminals
YA, YA-2N, YAB-4N, YA-L, YA-2LN, YA-LB
Splices
YS, YST, YS-L, YS-T, YSP-T
Aluminum
250 kcmil-2000 kcmil
Str. Code Cable
Terminals
YA-A
Splices
YS-A, YS-AT
Transmission and Distribution Connectors
Tension Sleeves:
Copper: 1/0 str. - 1000 kcmil
Aluminum: 1/0 str. - 2300 kcmil
ACSR: 1/0 - 2156 (84/19 str.) kcmil
Aerial:
Copper: 4/0 str. - 2500 kcmil
Aluminum: 3/0 str. - 2500 kcmil
YTS, YTN, YNS, YNA, YNT, YNTA, YNU, YDS, YDN, YCS, YCA, YCU

TYPE "L" DIES

For Use With Y60BHU and Y60LW

BURNDY® offers two types of "L" dies. Our standard width L dies (example: L735).

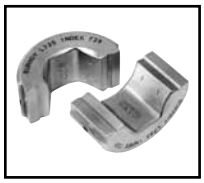

Wider "L" dies with Indicia marks example: L735W). Indicia marks on the die provide the installer with the start location for the next overlap crimp consistently on aluminum connector surfaces. Reduces the number of crimps and installation time.

The following dies are available in this series:

L717W	**L719W**
L720W	**L722W**
L724W	**L725W**
L727W	**L728W**
L729W	**L735W**

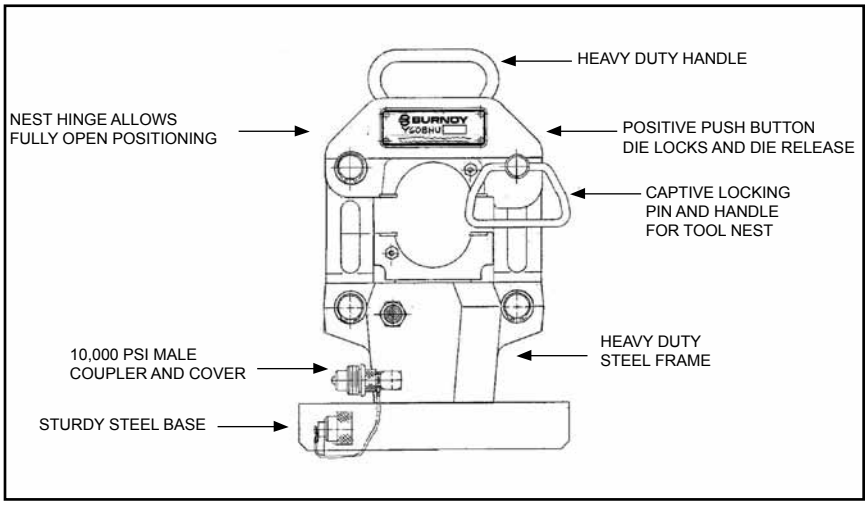

Y60LW

HYPRESS™

60 Ton Remote
Power Operated Hydraulic Tools

Single Acting Light Weight Hydraulic Tool

The Y60LW is a single acting, light weight 60 ton HYPRESS™ designed to install transmission and distribution connectors and sleeves. The Y60LW accommodates the same "L" dies used in the BURNDY® Y60BHU. The "L" dies are designed for copper and aluminum code cables, ACSR and aerial conductors. This tool is designed to be light weight and portable for easy maneuverability and will operate from any 10,000 psi hydraulic source with the proper oil capacity. The Y60LW comes with stand and carrying case (for head only).

Y60LW head

Features and Benefits

- Portable, light weight design of less than 43 lbs.
- 60 tons of crimp force at 10,000 psi operating pressure
- Large jaw opening to accommodate copper and aluminum code cables, ACSR and aerial conductor
- Single acting ram with heavy duty return spring
- Removable die cap is easily rotated allowing quick removal of splice connectors
- Upper die cap securely locks to a positive detent position for safe operation
- Fast easy die changing and secure die positioning with positive die release locking pins
- Die holders accommodate BURNDY "L" dies (shell configuration)
- Strong, replaceable die retainers for ultimate life
- Easy to carry with side lift handle
- Upper die cap lanyard cable enables a free hand for positioning work piece
- Heavy duty hoisting loop
- Base stand included (and also available as an accessory)
- Protected male coupler with captive cap
- 5-year limited warranty

SPECIFICATIONS

Output Force:	60 Tons
Tool Weight:	43 lbs
Height:	12.93 in (without stand)
Width:	8.06 in (without stand)
Warranty:	5 Year Limited

FOR USE ON

Copper
300 kcmil-2000 kcmil
Str. Code Cable
Terminals
YA, YA-2N, YA-4N, YA-L, YA-2LN, YA-LB
Splices
YS, YST, YS-L, YS-T, YSP-T

Aluminum
250 kcmil-2000 kcmil
Str. Code Cable
Terminals
YA-A
Splices
YS-A, YS-AT

Transmission and Distribution Connectors
Tension Sleeves:
Copper: 1/0 Str.-1000 kmcil
Aluminum: 1/0 Str.-2300 kcmil
ACSR: 1/0 Str.-2156 (84/19 str.)
Aerial:
Copper: 4/0 Str.-2500 kcmil
Aluminum: 3/0 Str.-2500 kcmil
YTS, YTN, YNS, YNA, YNT, YNTA, YNU, YDS, YDN, YCS, YCA, YCU

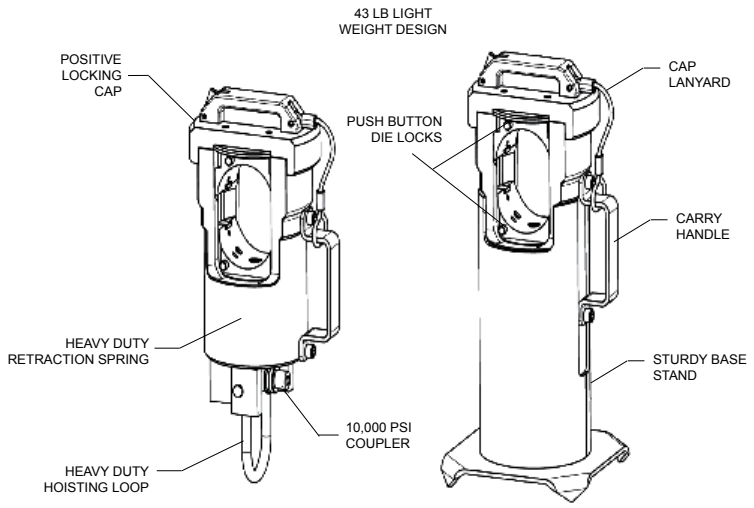

Y60LW stand

Y46 AND Y46C

HYPRESS™

15-Ton Force Remote Operated Hydraulic Tool—10,000 PSI

The Y46 standard tool and Y46C rubber covered tools are lightweight, compact and versatile with installation dies for both circumferential and nest-indentor types. Accessories include "U"-die adapter, a cable cutting die for 1.2" diameter non-steel conductors, plus a lifting eye and universal hot-stick adapter for overhead line construction. 5-year limited warranty.

Y46

Features and Benefits

- Compact "C" shaped head allows easy placement and removal from continuous conductor lengths
- Versatile and economical HYPRESS™ tools work on all commonly used copper and aluminum products
- Dies and adapters lock into or remove from tool head easily with the positive push button die locks
- Safety, strength and high quality is provided with strong forged steel and precision machined components
- Excellent for HYGROUND® compression grounding applications through 1" ground rods and up to 500 kcmil taps, terminals and splices
- Compression terminal, splice and tap connectors are UL Listed and CSA Certified when installed with the Y46 and Y46C HYPRESS™ and recommended die set
- **Y46C** has a permanently molded head of 3/16" rubber and includes a separate molded rubber boot to cover the lower HYPRESS™ body and hydraulic coupler for impact protection
- 5-year limited warranty

SPECIFICATIONS

	Y46	Y46C
Force Developed:	15 tons	15 tons
Operating pressure:	10,000 PSI	10,000 PSI
Jaw opening:	2"	2"
Maximum Width:	4-1/2"	4-3/4"
Overall Length:	15"	21-3/4" (inc. boot)
Weight (less case):	16 lbs.	17-1/2 lbs
Molded covering:	No	Yes

FOR USE ON

Copper #8 AWG Str. 1500 kcmil Code Cable Navy Cables Flexible and Extra Flexible 1/2"-1" Ground Rods	Terminals-Grounding to 500 kcmil YGA, YGHA, YGF Terminals-Uninsulated #8 to 1500 kcmil YA, YA-2N, YA-L, YA-LB, YA-TC, YA-2LN,YAB-4N, YAV-L Box, YAV-L, YAV-RS Box, YAV-RS, YA-TC-FX Terminals-Insulated #8 to 2/0 YAEV-L Box, YAEV-L, YAEV-H, YAEV-RS, YAEV-RH Splices #8 to 1500 kcmil YS, YS-T, YS-L, YS-LB, YST, YSP-T, YGS, YGHS Taps YH, YCHC #14 to 1000 kcmil YC-C to 4/0 AWG Taps-Grounding to 500 kcmil YGHC-C, YGHP-C, YGHR-C
Aluminum #8 AWG- 1250 kcmil Code Cables	Terminals YA-A, AYP, AYPO Splices YS-A, YS-AT, YRB Taps YFD, YFN, YFO, YFR
ACSR	See Burndy Overhead Transmission and Distribution Catalog Module

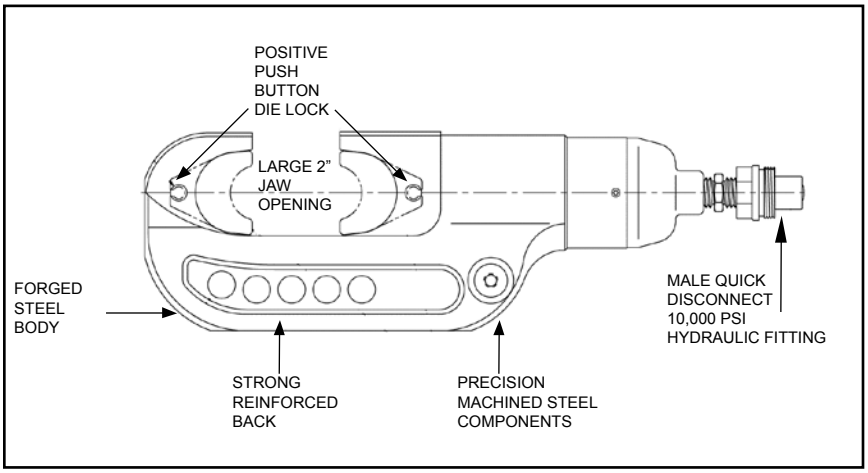

ACCESSORIES

Cat. No.	Description:
P15K	Cutter die max. 1.2" dia.
PUADP-1	"U"- die adapter
PT10128	Universal hotstick adapter - Y46
Y46-2	Same as Y46 with Female coupler

Y45

HYPRESS™

15-Ton Remote Power Operated Hydraulic Tool—10,000 PSI

The Y45 Series is designed for remote hydraulic operation. A C-shaped head design provides easy installation of tap and splice connectors. The hook style head with extensive ram travel operates easily on large distribution and transmission conductors. Together with accessories, the Y45 Series tooling may be used on overhead lines. The small light-weight head design is very adaptable for work in underground trenches and manholes. Uses standard BURNDY® "S" Dies.

Cat. No. **PT6515** is required to use "U" type dies in all Y45 variations. Order Head, Hose, Pump, Dies, and accessories separately. 5-year limited warranty.

PT6545

Features and Benefits

- Easy connector installation and tool removal from line conductors with the open C-shaped head
- Easily lifted into working position using lifting eye
- Easy die changing plus secure die alignment is provided with the positive die lock buttons
- Long life expectancy is provided with fully protected ram and die buttons
- Rapid assembly and disassembly is provided with the quick disconnect hydraulic coupler
- Rugged design provides long life expectancy
- 5-year limited warranty

SPECIFICATIONS

Operating pressure:	10,000 PSI
Output Force:	15 tons
Weight (less case):	15-3/4 lbs
Maximum Width:	7-1/4"
Maximum Height:	14-1/4"

FOR USE ON

Tension Sleeves	Copper Aluminum ACSR	#8 sol.-500 kcmil #6 sol.-954 kcmil #4 -795 (26/7) kcmil
Taps	Aluminum ACSR	#14-954 (18/1) ACSR #6-795 (54/7) kcmil
Aerial Cable Connectors	Copper Aluminum	#6 str.-1500 kcmil #4 str.-1000 kcmil
HYGROUND® Compression Grounding	Copper	#6-500 kcmil 1/2" - 1" ground rods
Code Cable Terminals and Splices Taps	Copper Aluminum Copper Aluminum	#8-1500 kcmil #8-1000 kcmil #14-1000 kcmil #14-900 kcmil

ACCESSORIES:

Cat. No.	Description:
PT6515	Adapter for use with "U" die sets.
PT6545	Die carrying case for "S" and "P" type dies. Holds eight (8) die sets. (Dies sold separately).

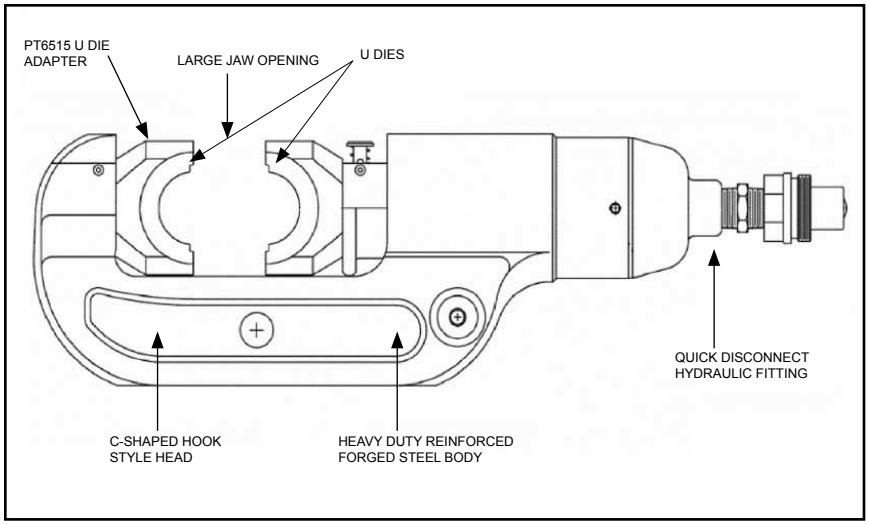

Y750BHXT AND Y750CBHXT RUBBER COVERED HEAD

HYPRESS™

12-Ton Remote Power Operated Hydraulic Tool

Conductor Range:
#14 - 750 kcmil Al/Cu
#4 - 556.5 kcmil ACSR

12 ton remote power operated hydraulic tool. The Y750BHXT HYPRESS™ incorporates a wide mouth (1.65") C-shaped head for all compression applications. The hook style head provides for easy tapping, splicing, and terminating of overhead lines as well as the full range of HYGROUND® compression grounding system connectors, NEC cable connections and N30 - N650 Navy cable applications.

All standard BURNDY® "U" dies fit the Y750BHXT and Y750CBHXT HYPRESS™. Dies and accessories sold separately.

The Y750CBHXT has a permanently molded rubber covered head and includes a separate rubber molded boot that covers the lower body and hydraulic fitting for tool impact protection. The tool comes with a 5-year limited warranty.

Features and Benefits

- Covers a wide range of applications and provides easy tool removal from continuous conductors with its C-shaped head (1.65" opening)
- Easy die change out and retention with exposed positive die lock buttons
- Uses all standard BURNDY® U-dies
- Y750CBHXT provides molded rubber covering on head, body and hose fittings
- Hot stick adapter sold separately
- Infinitely rotatable head, so hydraulic couplers won't easily loosen
- 5-year limited warranty

SPECIFICATIONS

Operating pressure:	10,000 PSI
Force developed:	12 tons
Jaw opening:	1.65" (42 mm)
Length:	12.8" (325 mm)
Weight:	10.3 lbs (4.7 kg)
Head width:	5.2" (132 mm)

FOR USE ON

- **Tension Sleeves**

Copper	#8 sol - 500 kcmil
Aluminum	#6 sol. - 556.5 kcmil
ACSR	#4 - 556.5 kcmil

- **Taps**

Copper	#14 solid - 500 kcmil
Aluminum	#6 - 500 kcmil

- **Aerial Cable**

Copper	#6 - 500 kcmil

- **Terminals and Splices**

Aluminum	#8 - 750 kcmil
Copper	#8 - 750 kcmil
ACSR	#4 - 556 kcmil

- **HYGROUND® (Compression Grounding)**

Copper	#6 - 500 kcmil (cable/ground rod)
Ground Rods	1/2" - 1" Diameter

ACCESSORIES

Cat. No.	Description
PT29402-1	Adjustable head grip for joining head to universal hot sticks.
PT29279-2	Force test gauge for accurate visual reading of output force.
PT29291	Die case Steel case for storage and protection of "U" dies.
WIREMIKE	Provides quick and easy identification of commonly used conductors.

FEATURES

REMOTE HEAD FOR USE WITH "U" STYLE DIES

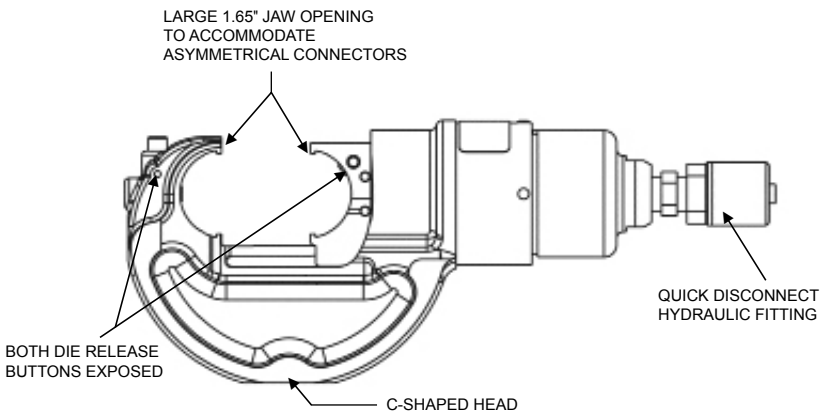

Y35BH HYPRESS™ 10,000 PSI

REMOTE POWER OPERATED COMPRESSION TOOL

The Y35BH series remote head is designed for remote power operation and incorporates the same C-shaped head as the Y35. The hook style head with extensive ram travel provides for easy tapping and splicing of overhead lines as well as HYGROUND® compression grounding systems. Uses all standard BURNDY® "U" dies.

The remote power operated Y35 heads are available covered with 3/16" molded rubber for tool impact protection.

Order head, hose, pump, dies and accessories separately. The product comes with 5-year limited warranty.

Features and Benefits

- Easy tool removal from line conductor after compression taps are installed with the open "C" shaped head
- Easily lifted into working position using the lifting eye
- Easy die changing plus secure die alignments provided with the positive die lock buttons
- Uses all standard BURNDY® "U" dies
- Long life expectancy is provided with heavy duty reinforced back
- Mates with all universal type Hot-stick tooling
- Rapid assembly and disassembly is provided with the quick disconnect hydraulic fitting
- Type **Y35BH-4** head is covered with 3/16" molded rubber
- 5-year limited warranty

SPECIFICATIONS

	Y35BH	Y35BH-4
Operative pressure:	10,000 PSI	10,000 PSI
Jaw opening:	.95 in	.95 in
Force Developed:	12 tons	12 tons
Weight(less case):	8 lbs	9 lbs
Maximum width:	4-3/4 in	6 in
Maximum height:	9-1/4 in	10-1/2 in
Molded covering:	—	Yes

FOR USE ON

Tension Sleeves	Copper Aluminium ACSR	#8 Sol.-500 kcmil #6 Sol.-636 kcmil #4 -556.5 (26/7)
Taps Aerial Cable Connectors	Copper Aluminium	#14-556.5 ACSR (18/1) #6 Sol.-636 kcmil #4 -556.5 (26/7)
Code Conductors	Copper	#8 Str.-750 kcmil terminals - 400 kcmil splices
	Aluminium	#6 Str.-750 kcmil terminals - 400 kcmil splices
HYGROUND® Compression Grounding	Copper (cable/cable)	#6-500 kcmil
	Copper (cable/grd. rod)	#6-500 kcmil
	Ground Rods	1/2 in - 3/4 in

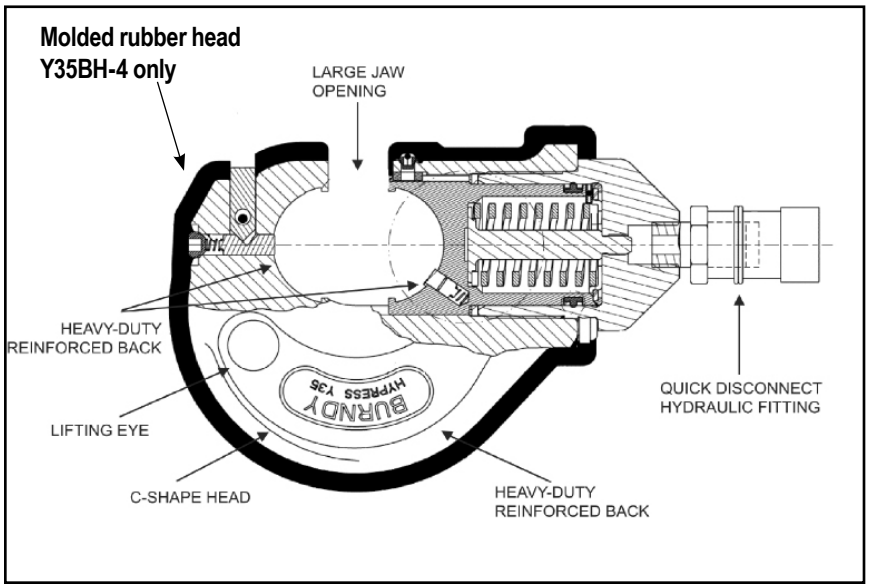

Y35BH Variations:

Y35BH	**Head Only**
Y35H	Includes the Y35BH HYPRESS™ head, PT29402-1 universal hot-stick adapter, and steel carrying case.
Y35B	Includes the Y35BH HYPRESS™ head, PT91 steel reinforced hydraulic hose and an FP10 foot pump in a steel carrying case. Note: NOT for use on energized conductors.
Y35BH-4	Permanent Molded Rubber Head. The Y35BH-4 is covered with 3/16" molded rubber for tool impact protection (not insulation)

Y39BH HYPRESS™ 10,000 PSI

REMOTE POWER OPERATED COMPRESSION TOOL

The Y39BH Remote Head is designed for remote power operation and incorporates the same small head as the Y39. Convenient die holder with recessed spring latch makes it easy to remove or lock into position. Dies are located and held in position with positive push button die locks. Dies sold separately. Uses all standard BURNDY® "U" dies. 5-year limited warranty.

Features and Benefits

- Easy to work in small tight spaces with only a 3-1/8" wide compression head.
- Easy to locate and hold dies in position with the positive push button die locks plus die changing is accomplished easily without ball checks or set screws.
- Easy to remove or lock into position die holder with recessed spring latch plus leather strap to prevent loss.
- Compression terminal, tap and splice connectors are UL Listed and CSA Certified when installed with the Y39 tool and recommended die set.
- Uses all standard BURNDY® "U" dies.
- Very versatile tool that is able to work with 10,000 PSI pumps.
- 5-year limited warranty.

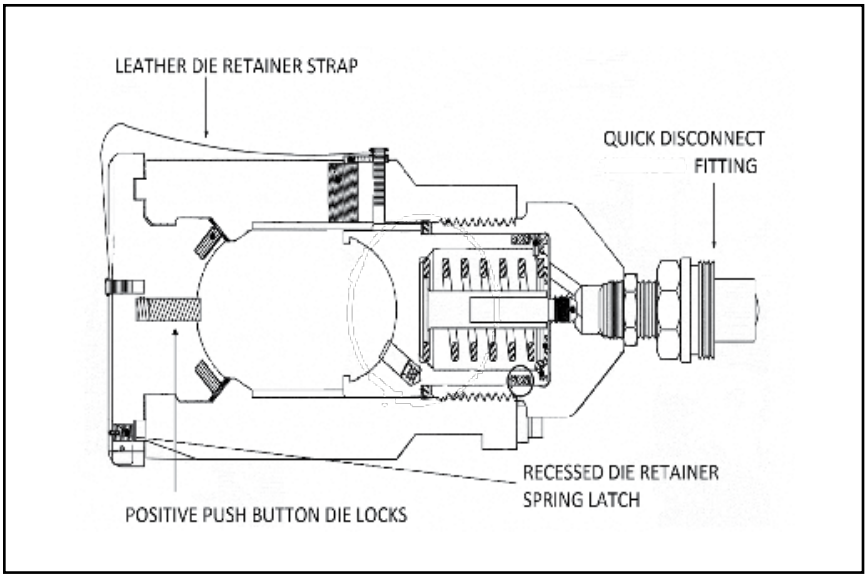

SPECIFICATIONS

Operating pressure:	10,000 PSI
Force developed:	12 tons
Weight:	6-1/2 lbs
Maximum head Width:	3-1/8"
Minimum Height:	9-1/8"

FOR USE ON

COPPER
#6 AWG - 750 kcmil str.
Code Cable
N30-N650 Navy Cable
Flexible and Extra Flexible
Terminals—Uninsulated
YA, YA-L, YA-LB, YGH, YGHA
Splices and Tees—Uninsulated
YS, YS-L, YS-LB, YS-T, YSP-T, YST

COPPER-AN or AIR
#6 AWG - 4/0 str. Code Cable
AN6-AN 4/0 Aircraft Cable
Flexible and Extra Flexible
Terminals—Uninsulated
YAV-L Box, YAV-L, YAV-RS Box, YAV-RS
Splices and Tees—Uninsulated
YSV-L Box, YSV-L

COPPER-INSULATED TERMINALS
#8-AWG - 2/0 str. Code Cable
AN8-AN 2/0 Aircraft Cable
Flexible and Extra Flexible
Terminals—Insulated
YAEV-L Box, YAEV-L, YAEV-RS Box, YAEV-RS, YAEV-RH

COPPER - TAPS
#12 AWG Solid - 250 kcmil
Taps—YC-C, YGHC-C, YGHP-C, YGHR-C, YH, YCHC

ALUMINUM
#8 AWG - 750 kcmil str.
Code Cable
Terminals—YA-A
Splices—YS-A, YS-AT, YRB

ALUMINUM
#6 str. - 500 kcmil
Taps—YFD, YFN, YFO

Y644MBH

DIELESS HYPRESS™

REMOTE OPERATED HYDRAULIC TOOL - 10,000 PSI

The "1" Crimp-Range Taking 11-Ton Force Hydraulic Remote Tool for #6 - 1000 kcmil Copper & Aluminum HYLUG™ Terminals and HYLINK™ Splices.

The "1" Crimp Type Y644MBH Dieless HYPRESS™ Remote Tool, crimps 195 different copper and aluminum HYLUG™ terminals and HYLINK™ splices, which cover the breadth of 38 code conductor sizes and 15 Navy cable sizes.

Only one (1) crimp is required for each wire termination for both long and standard length barrels on BURNDY HYLUG™ and HYLINK™ connectors throughout the entire conductor range. The Y644MBH dieless remote head tool operates on 10,000 psi hydraulic pressure and develops an output force of 11 tons, the same as the self-contained Y644HSXT Dieless HYPRESS™. 5-year limited warranty.

Features and Benefits

- Dieless system, eliminates the need to purchase and maintain dies
- Latch head design
- Range taking Dieless design
- Easy tool positioning with its infinitely rotatable head
- Easy inspection and positive identification is provided with the BURNDY® logo
- Heavy duty head
- 5-year limited warranty

SPECIFICATIONS

Force developed:	11 tons
Operating pressure:	10,000 PSI
Head width:	3.93"
Overall Length:	12"
Weight (less case):	9-1/2 lbs

FOR USE ON

Copper #6-1000 kcmil	Terminals YA-L, YA-2LN, YA, YA-2N, YA-L-2TC, YAB-4N, YA-L-TC, YA-2L, YA-4N Splices YS-L, YS-T, YS
Aluminum #6-1000 kcmil	Terminals YA-A, YA-A-TN Splices YS-A
Aluminum #6-750 kcmil	HYPLUG™ AYP, AYPO

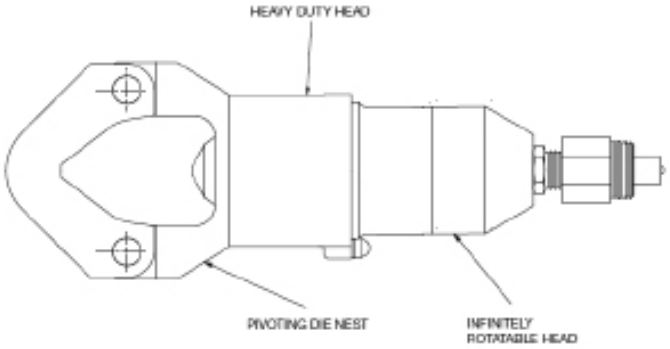

The chart tbelow shows the HYDENT™ lugs and two way splices, when crimped with the Y644MBH Dieless HYPRESS™ Tool, produce the following range taking capabilites.

Aluminum Connectors		Copper Connectors	
Standard Wire Size	**Expanded Wire Range**	**Standard Wire Size**	**Expanded Wire Range**
#6 AWG	#6 AWG	#6 AWG	#6 AWG
#5 AWG	#5-#6 AWG	#5 AWG	#5-#6 AWG
#4 AWG	#4-#6 AWG	#4 AWG	#4-#6 AWG
#3 AWG	#3-#6 AWG	#3 AWG	#3-#6 AWG
#2 AWG	#2-#6 AWG	#2 AWG	#2-#6 AWG
#1 AWG	#1-#2 AWG	#1 AWG	#1-#2 AWG
1/0 AWG	1/0-#1 AWG	1/0 AWG	1/0-#6 AWG
2/0 AWG	2/0-#1 AWG	2/0 AWG	2/0-#4 AWG
3/0 AWG	3/0-#1 AWG	3/0 AWG	3/0-#2 AWG
4/0 AWG	4/0-#1 AWG	4/0 AWG	4/0-#1 AWG
250 kcmil	250-1/0 AWG	250 kcmil	250-1/0
300 kcmil	300-2/0 AWG	300 kcmil	300-2/0
350 kcmil	350-3/0 AWG	350 kcmil	350-3/0
400 kcmil	400-4/0 AWG	400 kcmil	400-4/0
500 kcmil	500-4/0 AWG	500 kcmil	500-4/0
600 kcmil	600-250 kcmil	600 kcmil	600-250
750 kcmil	750-500 kcmil	750 kcmil	750-500
1000 kcmil	1000-750 kcmil	800 kcmil	800-500
		1000 kcmil	1000-750

4-POINT® Y81KFTMBH

DIELESS HYPRESS™

Remote Operated
Dieless Hydraulic Tool-10,000 PSI

#8 - 1000 kcmil Copper
HYLUG™ Terminals and
HYLINK™ Splices

#8 - 750 kcmil Aluminum
HYLUG™ Terminals and
HYLINK™ Splices

The Y81KFTMBH 4-POINT® dieless HYPRESS™ is a remote powered 6 ton hydraulic crimping tool for use on a wide variety of terminal and splice compression applications. The Y81KFTMBH incorpo-rates a dieless latch style head that provides easy tool removal from continuous conductor runs and eliminates the need to purchase and maintain dies. The Y81KFTMBH dieless remote head tool operates on 10,000 psi hydraulic pressure and develops an output force of 6 tons, the same as the self contained Y81KFTMBH. The result is easy termination and splicing using BURNDY® HYLUG™ and HYLINK™ terminals and splices.

The Y81KFTMBH is supplied with a canvas bag and quick connect fittings and comes complete with a 5-year limited warranty.

Y81KFTMBH dieless HYPRESS™ Range Taking Capabilities: The Y81KFTMBH provides range taking capabilities that is UL Listed and CSA Certified for Copper (Code, Compact and Flex) and Aluminum (Code and Compact) conductors when used in conjunction with BURNDY® HYLUG™ terminals and HYLINK™ splices. *See chart for connector, conductor and range taking combinations.*

Features and Benefits

- Dieless installation system
- UL Listed and CSA Certified with Range Taking Capabilities
- Flip top head design for easy loading and removal of installed terminals and splices, saving time
- Incorporates Parker type quick connect couplers
- Audible pressure "pop-off" valve and die embossment providing 360° inspectability
- 5-year limited warranty on tool

SPECIFICATIONS

Output Force:	6 tons (12,000 lbs) (5.4 metric tons)
Weight:	8.5 lbs l(3.86 kg)
Overall Length:	13.9 in (354 mm)
Head Width:	5.4 in (138 mm)
Operating Pressure:	10,000 PSI (68.9 MPa)

FOR USE ON

• Copper, Aluminum, Compressed, Compact, Stranded, Solid and Flex Conductors

• Installs Splices, Taps and Terminations:
#8 - 1000 kcmil Copper
(YA, YA-L, YS, YS-L, YS-T, Y-R)
#8 - 777.7 (750 Nominal Flex Wire Size) kcmil Flex
(YA-FX, YAV, YA-L-FX, YS, YSV-FXB)
#8 - 750 kcmil Aluminum
(YA-A, YS-A)
#8 - 750 kcmil Aluminium Pin Adapters
(AYP, AYPO)

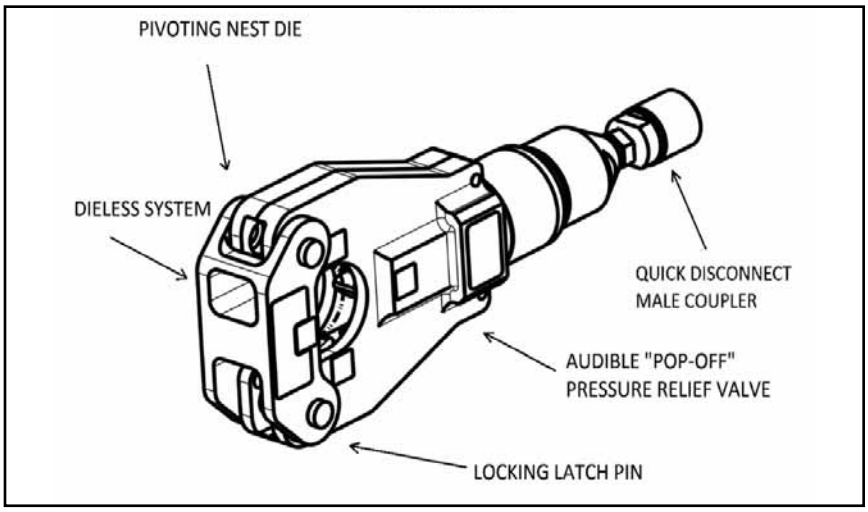

4-POINT® Y4PC834MBH

DIELESS HYPRESS™

Remote Operated
Dieless Hydraulic Tool - 10,000 PSI

The Y4PC834MBH 4-POINT® C-head dieless HYPRESS™ is a remote powered 6 ton hydraulic crimping tool for use on a wide variety of tap, terminate, and splice compression applications. The dieless capability of this tool eliminates the need to purchase or maintain additional dies. The Y4PC834MBH incorporates a C-shaped head design making it ideal for crimping in tight areas and is easily removed from continuous conductor runs. The head rotates 360° and is mated to a patented rapid advance pump. The Y4PC834MBH weighs only 8.35 pounds and delivers 6 tons of crimping force. The result allows for easy tap, termination and splicing of compression connectors.

The Y4PC834MBH is supplied with a canvas bag, quick connect fittings and comes with a 5-year limited warranty.

The Y4PC834MBH provides range taking capabilities that are UL Listed and CSA Certified for Copper (Code, Compact and Flex) and Aluminum (Code and Compact) conductors when used in conjunction with BURNDY® HYLUG™ terminals and HYLINK™ splices as listed in Section C of Master Catalog.

Features and Benefits

- Dieless installation system
  - ◊ Eliminates the need to purchase and maintain dies
- UL Listed and CSA Certified with range taking capabilities
  - ◊ Provides the installer with a UL Listed and CSA Certified crimps when used in conjunction with BURNDY HYLUG™ and HYLINK™ compression connectors
- C-shaped head design
  - ◊ For easily removing tool from continuous run conductors–Simply slide the opening of the head off the conductor Also ideal for use in tight or constrained spaces
- Visual 360° inspectability
  - ◊ Assures proper crimps with visual indicators for the installer
- 5-year limited warranty

SPECIFICATIONS

Output Force:	6 tons (5.4 metric tons)
Weight:	8.35 lbs (3.7kg)
Length:	3.9 in
Width:	5.4 in (178 mm)

FOR USE ON

- Copper, Aluminum, Compressed, Compact, Stranded, Solid and Flex Conductors

- Installs Splices, Taps and Terminations:
  #8 - 1000 kcmil Copper (YA, YA-L)
  #8 - 500 kcmil Copper (YS, YS-T, YS-L, Y-R)
  #8 - 777 (750 Nominal Flex Wire Size) kcmil Flex (YA-FX, YAV, YA-L-FX)
  #8 - 535 (500 kcmil nom. flex wire size) kcmil flex (YS, YS-LB, YSV-FXB)
  #8 - 750 kcmil Aluminum (YA-A)
  #8 - 350 kcmil Aluminum (YS-A)
  #8 - 750 kcmil Aluminum Pin Adaptors (AYP, AYPO).

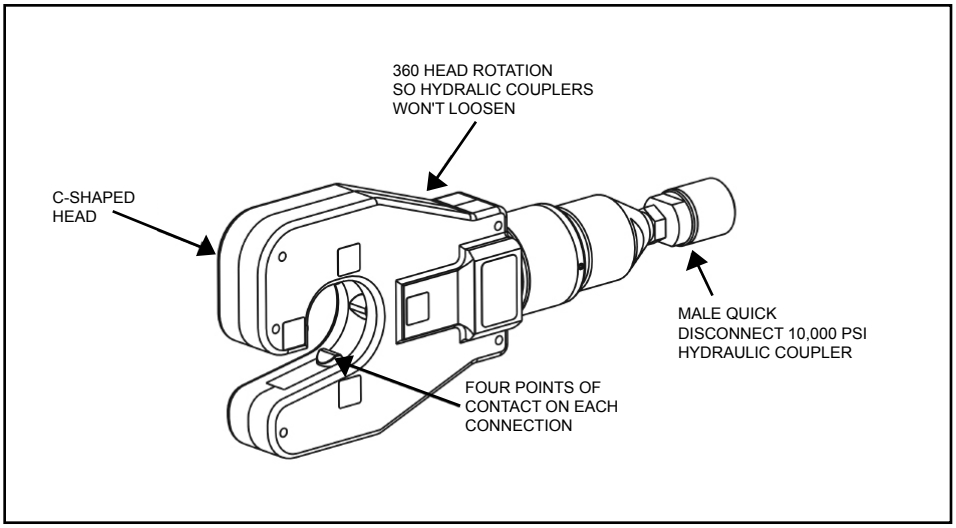

Y34BH

HYPRESS™

Remote Operated
Hydraulic Tool-10,000 PSI

9 ton remote power operated hydraulic tool. The Y34BH HYPRESS™ tool is designed for remote hydraulic power operation. Its new 10,000 PSI operating pressure makes it easily adaptable to most remote power systems. Its small C-shaped head is light-weight, compact and with a relatively large jaw opening ideally suited for NETWORK UNDERGROUND systems.

The tool comes standard with permanent molded head with 3/16" rubber and includes a separate molded rubber boot that covers the lower body and hydraulic coupler for tool impact protection. Together, with other BURNDY® hydraulic accessories, the Y34BH HYPRESS™ tool may be used on lines. The Y34BH-1 has a ten foot non-conductive 10,000 PSI hose attached at the factory. The Y34BH Series tool has a 5-year limited warranty.

Features and Benefits

- Allows for easy placement and removal from continuous conductor lengths
- Long life
- Fast ram retraction
- Molded rubber covering on head, body, and hose fittings
- Standard operating pressure
- Ease in handling
- Greater reliability
- Reduced tool life cycle cost
- 5-year limited warranty
- Head and body rubberized
- Accommodates "B" dies

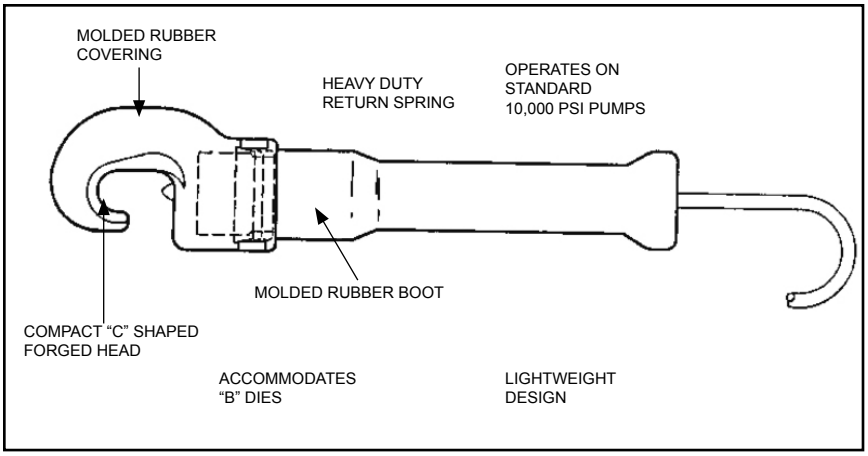

SPECIFICATIONS

Operating pressure:	10,000 PSI
Jaw opening:	1-1/2"
Maximum force generated:	9 tons
Head Length:	11-1/2"
Overall dimesions:	16-3/4" (incl.boot)
Total weight:	Approx. 8 lbs.

FOR USE ON

- Copper: #4-500 kcmil str.
  Welding Cable: 350 kcmil
  N40 to N500 Navy Cable
  Flexible and Extra Flexible
  #4 to 4/0 Aircraft Cable
  HYLUG™: Terminals-Uninsulated
  HYLINK™: Splices and Uninsulated
- HYCRAB™: BURNDY® Network connector System.
  Copper: #4-500 kcmil str.
  Aluminum: #6-300 kcmil

Installation Nest	Die Indentor	Max. Conductor Aluminum
B4CD	Y34PA	#6 Str.
B1CD	Y34PA	#4 Str.
B26D	Y34PA	#2 Str.
B26D	Y34PR-5	#1 Str.
B27D	Y34PR-5	1/0 Str.
B29D	Y34PR-5	2/0 Str.
B30D	Y34PR-5	3/0 Str.
B31D	Y34PR-5	4/0 Str.
B32D	Y34PR-5	250 kcmil
No die req'd.	Y34PR-11	300 kcmil

Installation Nest	Die Indentor	Max. Conductor Aluminum
B4CD	Y34PR	#4 Str.
B2CD	Y34PR	#2 Str.
B1CD	Y34PR	#1 Str.
B25D	Y34PR	1/0 Str.
B26D	Y34PR	2/0 Str.
B27D	Y34PR	3/0 Str.
B28D	Y34PR	4/0 Str.
B29D	Y34PR	250 kcmil
B30D	Y34PR	300 kcmil
B31D	Y34PR	350 kcmil
No die req'd.	Y34PR	500 kcmil

Y29BH

HYPRESS™

Remote Operated
Hydraulic Tool-6,000 PSI

4.5 Ton remote power operated hydraulic tool. The Y29BH HYPRESS™ tool is designed for remote hydraulic power operation. Its small, "C" shaped head is lightweight, designed for use in confined areas, where visibility and space is limited. Accommodates D- (series) nest dies and Y29- (series) indentor dies, for use with code or flex connector/conductor applications. Ideal for OEM applications. Dies sold separately. The Y29BH has a 5-year limited warranty.

Features and Benefits

- Easy placement/removal on continuous conductor lengths
- Lightweight, portable head design
- Installs a wide variety of lugs and splices
- Ideal for AN, Flex and Code conductor terminations
- Hydraulic coupler
- "C" shaped head
- 5-year limited warranty

SPECIFICATIONS

Operating Pressure: 6,000 PSI
Height: 3"
Length: 10.75" (Including coupler fitting)
Head width: 1.15"
Jaw Opening: 1.2"
Weight: 5 lbs
Output Force: 4.5 tons (9000 lbs)
Crimp Type: Nest/Indentor

FOR USE ON

Copper #8 - 4/0 AWG, Code/Flex

Nylon Insulated Lugs
(Connectors meet MIL-T-7928 requirements)
• YAEV-L, YAEV-H, YAEV-RS, YAEV-RH

Non-Insulated Lugs
(Connectors meet MIL-T-7928 requirements)
• YAV-L, YAV-R, YAV-RS

Non-Insulated Splices
(Type YSV-L connectors UL Listed, CSA Certifed)
• YSM, YSV-L

Uninsulated Connectors		Maximum Conductor	Insulated Connectors	
NEST	IND.	SIZE	NEST	IND
DV8L-1	Y29PL	#8 AWG	DEV8L	Y29PLE-1
DV6L	Y29PL	#6 AWG	DEV6L	Y29PLE-1
DV4L	Y29PL	#4 AWG	DEV4L	Y29PLE-1
DV2L	Y29PL	#2 AWG	DEV2L	Y29PLE
DV1L	Y29PL	#1 AWG	DEV1L	Y29PLE
DV25L	Y29PL	1/0 AWG	DEV25L	Y29PLE
DV26L	Y29PL	2/0 AWG	DEV26L	Y29PLE

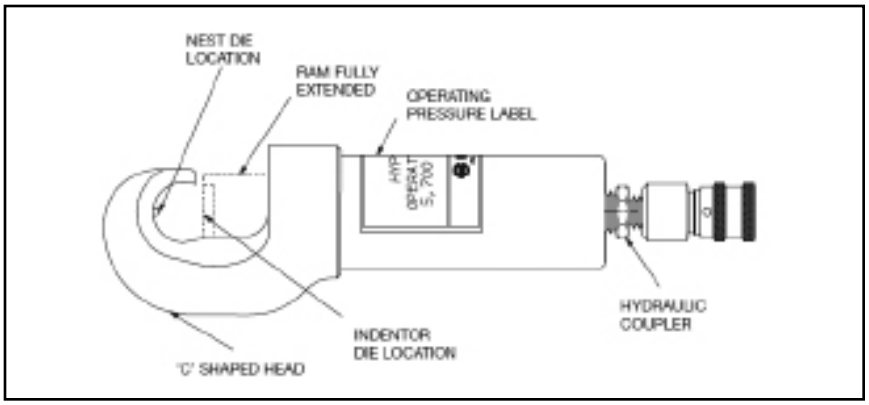

Y10D

HYTOOL™

Two Tools in One —
#22-10 AWG Nylon Insulated Connectors,
#22-10 AWG Uninsulated Connectors

Hand-held plier type tool that will install #10 - 22 AWG nylon insulated and uninsu-lated terminals and splices, with a precision machined wire cutter for aluminum and copper wire in the nose of the tool. Long handles provide greater mechanical advantage. 5-year limited warranty.

SPECIFICATIONS

Length: 9-3/4"
Weight: 13.5 oz

FOR USE ON

#10-22 AWG Nylon Insulated Terminals

Box Cat. Types	Bulk Cat. Types
TN	YAES
TN-F	YAES-E
YAE-N BOX	YAE-N
YAE-N-F BOX	YAE-N-F
YAE-Z BOX	YAE-Z
YAEV BOX	YAEV

#10-22 AWG Nylon Insulated Splices

Box Cat. Types	Bulk Cat. Types
SN	YSE-HN *
SNM	YSES
YSE-H BOX *	YSE-H *

#10-22 AWG Uninsulated (Bare) Terminals

Box Cat. Types	Bulk Cat. Types
T	YAD
T-F	YAD-F
YAV BOX	YAV
YAV-T-F BOX	YAV-T-F
YAV-H BOX *	YAV-H *
YAV-H-F BOX *	YAV-H-F *
YAV-Z BOX	YAV-Z

#10- 22 AWG Uninsulated (Bare) Splices

Box Cat. Types	Bulk Cat. Types
YSV BOX	YSV
YSV-H BOX *	YSV-H *

Features and Benefits

- Easy wire cutting with precision machined cutting blade
- Save time, money and lower installed costs with one tool for both nylon insulated and uninsulated (bare) connectors
- Easy tool operation out of the carton. No need to break in the tool prior to actual usage
- A heavy duty forged steel tool, that has a rust resistant finish will provide a long durable life
- Easier crimping on #22-10 bare and nylon insulated connectors because of the longer handles that provides greater mechanical advantage*
- Comfort grip handles fit hands comfortably helping make the tool easy to use
- Terminals and splice connectors are UL Listed and CSA Certified when installed with the Y10D HYTOOL™
- 5-year limited warranty

* Conductor crimp only.

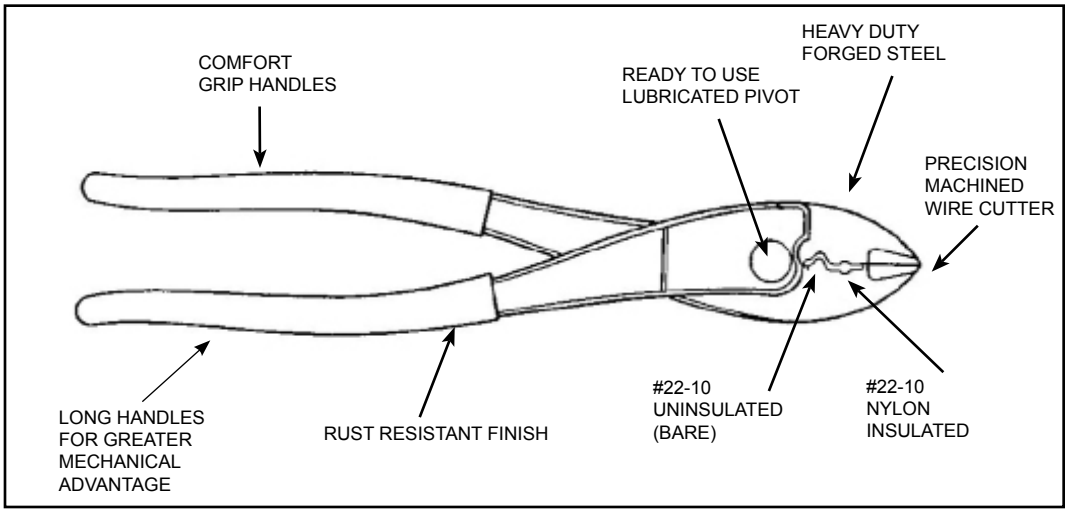

Y10-22

HYTOOL™

#22-10 AWG Insulated Connectors,
#22-10 AWG Uninsulated Connectors

Hand-held plier type tool to install #10-22 AWG insulated and uninsulated terminals and splices with a wire cutter in the nose of the tool. Will strip #10-22 AWG wire and cut common size mild steel and non-ferrous screws. 5-year limited warranty.

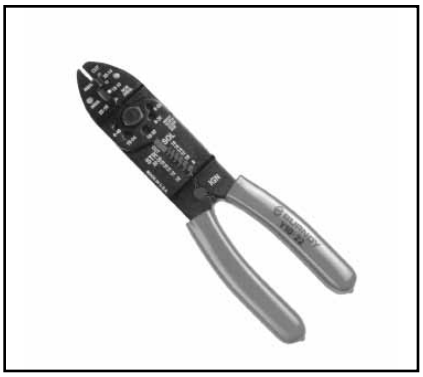

Features and Benefits

- Easy wire cutting with anvil type wire cutter design
- Crimps full range of insulated terminals and splices #22-10 AWG
- Cut off dies for common size mild steel and non-ferrous screws
- Crimps full range of uninsulated terminals and splices #22-10 AWG
- Full range insulation strippers for wire sizes #22-10. One step stripping
- Comfort grip handles fit hands comfortably helping make the tool easy to use
- 5-year limited warranty

* Conductor crimp only

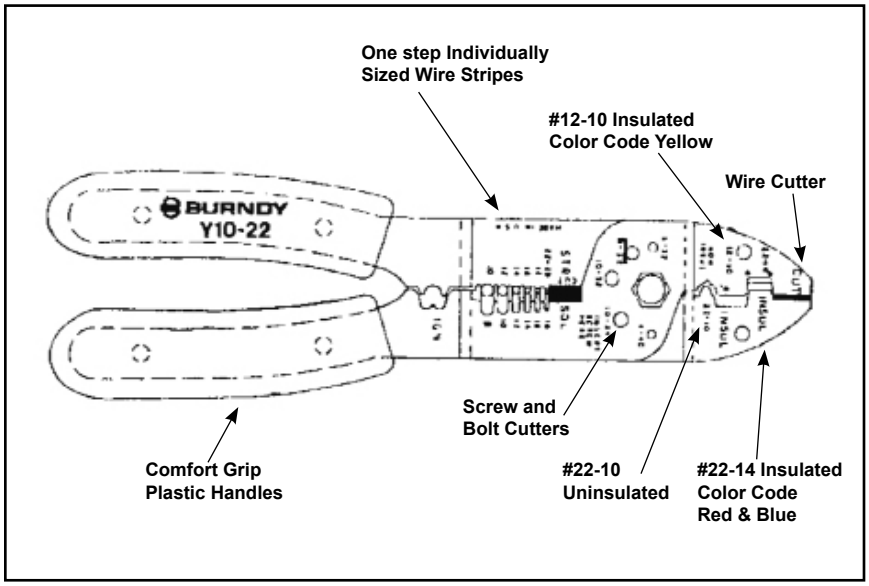

SPECIFICATIONS

Length: 8-5/8"
Weight: 11 oz

FOR USE ON

#10-22 AWG Nylon Insulated Terminals

Box Cat. Types	Bulk Cat. Types
TN	YAES
TN-F	YAES-F
YAE-N BOX	YAE-N
YAE-N-F BOX	YAE-N-F
YAE-Z BOX	YAE-Z
YAEV BOX	YAEV

#10-22 AWG Nylon Insulated Splices

Box Cat. Types	Bulk Cat. Types
SN	YSE-HN *
SNM	YSES
YSE-H BOX *	YSE-H *

#10-22 AWG Vinyl Insulated Terminals

Box Cat. Types	Bulk Cat. Types
TP	BA
TP-F	BA-EF
TP-Z	BA-EZ

#10-22 AWG Vinyl Insulated Splices

Box Cat. Types	Bulk Cat. Types
SP	BS

#10-22 AWG Uninsulated (Bare) Terminals

Box Cat. Types	Bulk Cat. Types
T	YAD
T-F	YAD-F
YAV BOX	YAV
YAV-T-F BOX	YAV-T-F
YAV-H-F BOX *	YAV-H-F *
YAV-Z BOX	YAV-Z

#10-22 AWG Uninsulated (Bare) Splices

Box Cat. Types	Bulk Cat. Types
YSV BOX	YSV
YSV-H BOX *	YSV-H *

TYPE YF22-10FL

HYTOOL™
Dieless, Front Load, Range-Taking, Ratchet Tool

YF22-10FL Range-Taking Ratchet Tool for installing #22 - #10 AWG Insulated and Uninsulated Ferrules

The YF22-10FL ergonomic full cycle ratchet tool provides a complete positive crimp each time. The ergonomic comfort grip handles reduce operator fatigue during continuous use. Once started, the ratchet mechanism does not allow the handles to be opened until the full ratcheting cycle is completed, unless the operator actuates the emergency release lever. This provides for a complete crimp before a ferrule can be removed from the tool. Range-taking to accommodate ferrules from #22- #10 AWG. Each tool comes complete with a 5-year limited warranty.

Features and Benefits

- Ergonomic hand tool for crimping insulated and uninsulated ferrules
- Overmolded comfort grip handles reduce fatigue during continuous use
- Full cycle ratchet mechanism to assure properly crimped connections
- Dieless crimping eliminates the need for multiple die grooves or stocking of extra die sets
- Front load crimping position is ideal for use in tight spaces, such as panels and enclosures
- Ratchet mechanism ensures a full crimp cycle
- Ratchet release lever can be actuated in the event of a misalignment
- 5-year limited warranty

SPECIFICATIONS

Output Force:	1600 lbs
Tool Weight:	0.82 lbs
Length:	7.75 in
Width:	2.32 in
Warranty:	Limited 5 Years

FOR USE ON

#22 - #10 AWG Insulated and Uninsulated Ferrules

BURNDY Connector Family Type YF and YF-UI Wire End Ferrules

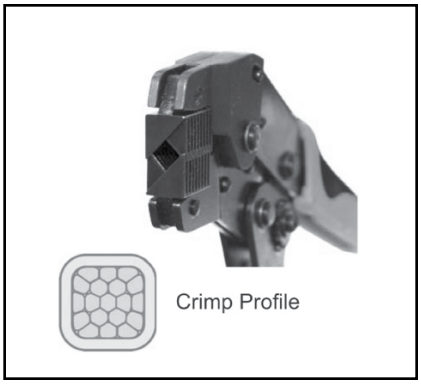

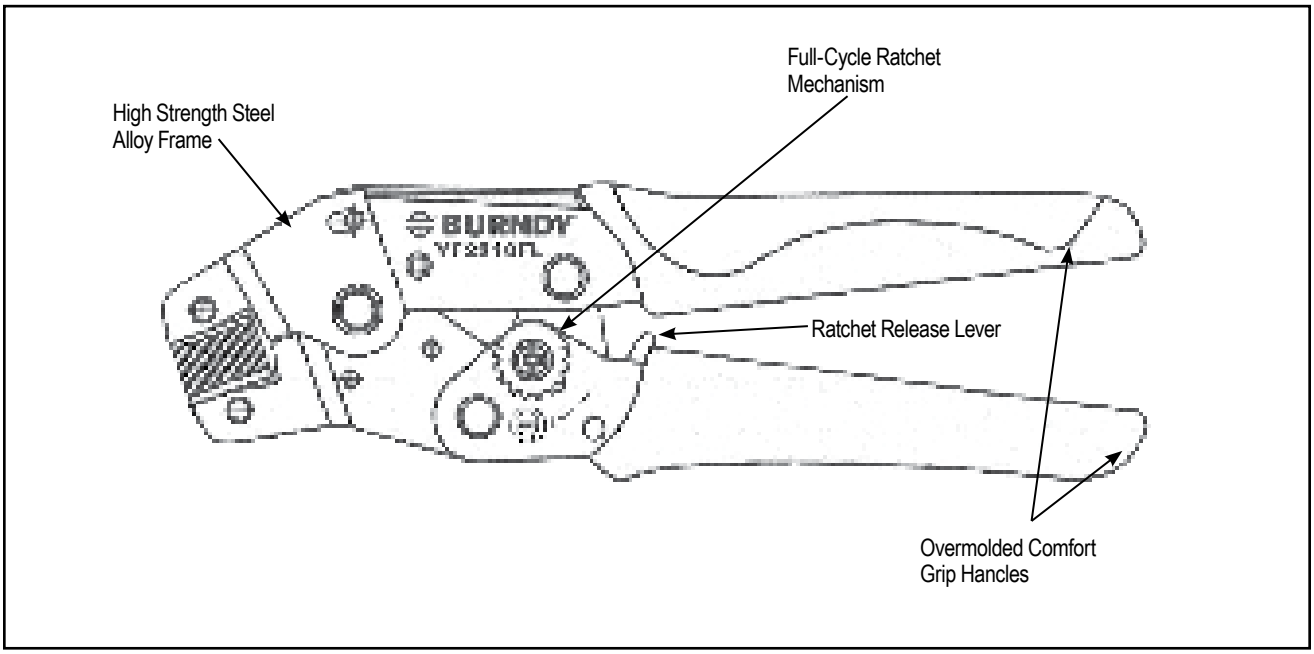

YF-TOOL

Installation Ratchet Tool for Bare and Insulated Ferrules

For Use On Copper Ferrules

These tools have been specifically designed to work with both the insulated and uninsulated ferrules type YF. Unless otherwise noted, the tools have a trapezoidal crimp type.

Features and Benefits

- Ergonomic handle design to help ease installer fatigue
- Release mechanism
- Low handle force required

Catalog Number	Capacity	Crimp Profile	Weight	Handle Color
YF3206TOOL	32-6 AWG	Square	1.10 lbs	Black/Orange
YF2610TOOL	26-10 AWG	Trapezoidal	1.02 lbs	Blue
YF2214TOOL	22-14 AWG	Trapezoidal	1.05 lbs	Red
YF2210TOOL	22-10 AWG	Trapezoidal	1.05 lbs	Red
YF1006TOOL	10-6 AWG	Trapezoidal	1.05 lbs	Red
YF0801TOOL	8-1 AWG	Trapezoidal	1.80 lbs	Red
YF0401TOOL	4-1 AWG	Trapezoidal	1.50 lbs	Red/Blue
YF1/03/0TOOL	1/0-3/0 kcmil	Trapezoidal	1.80 lbs	Red
YF4/0250TOOL	4/0-250 kcmil	Trapezoidal	1.80 lbs	Red

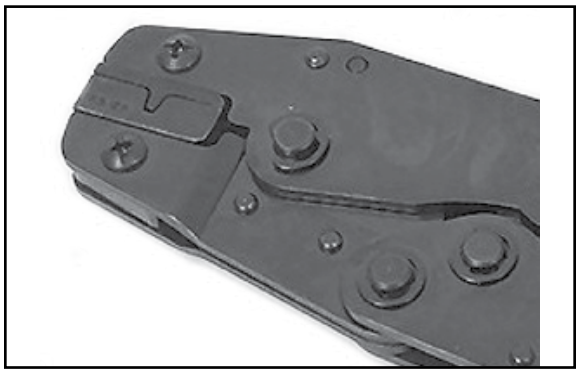

YF2214TOOL has one groove to accept 22-14 AWG range

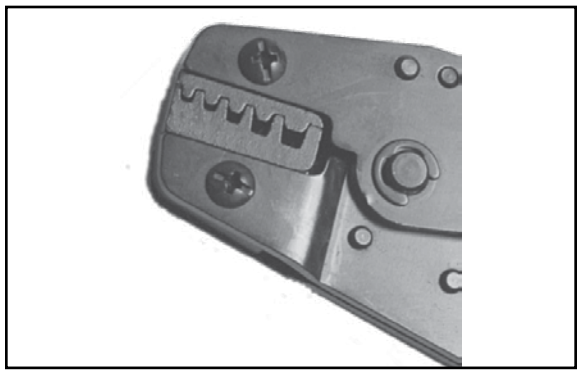

YF2610TOOL, YF2210TOOL, and YF1006TOOL have multiple grooves for range capacity

Y8MRB-1

HYTOOL™

#22-8 AWG

Hand-held full cycle ratchet tool for #8-22 AWG uninsulated terminals and splices. Full cycle feature builds in reliability and removes the human factor from the finished installation. 5-year limited warranty.

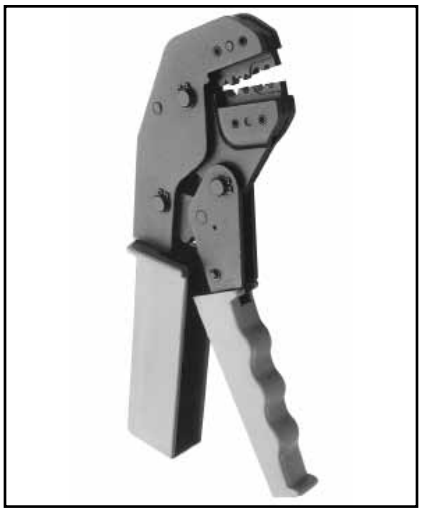

Features and Benefits

- One tool to accommodate #22-8 AWG
- Lightweight
- Full cycle ratchet for positive crimping
- Inspection (PG) gauges available to check each groove

Groove	Gauge#
#18	PG395-1
#14	PG396-1
#10	PG397-1
# 8	PG398-1

- Each indentor has its own identifying mark for inspectability
- Jaw opening orientation, molded finger and palm grips and the easy reach frame minimize user fatigue

SPECIFICATIONS

Length: 9-1/2"
Weight: 1.21 lbs

FOR USE ON

BOX CAT. TYPES	BULK CAT. TYPES
Uninsulated Terminals	
T	YAD
T-F	YAD-F
YAV BOX	YAV
YAV-L BOX	YAV-L
YAV-T-F BOX	YAV-T-F
YAV-Z BOX	YAV-Z
Uninsulated Splices	
YSV BOX	YSV
YSV-L BOX	YSV-L

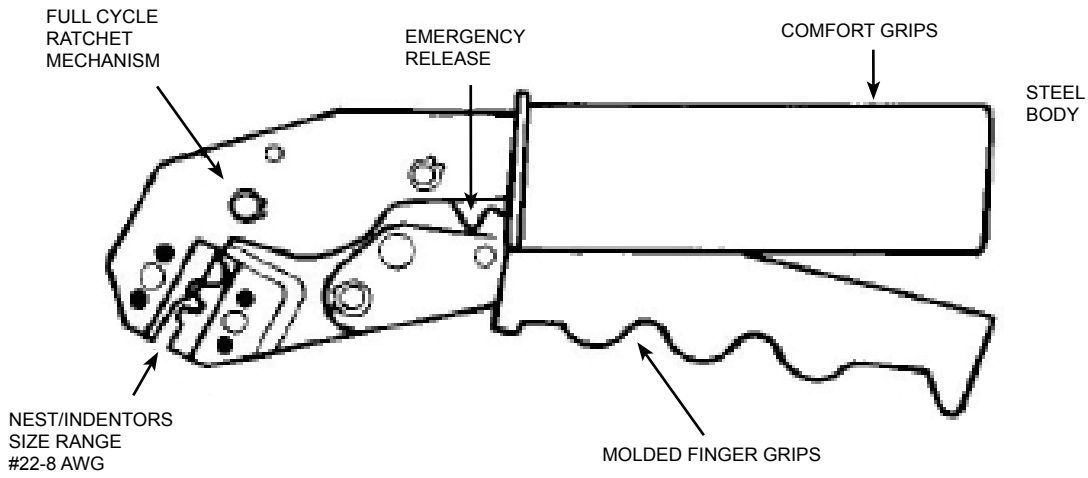

MR8

HYTOOL™

Full Cycle Ratchet Hand Tools

The HYTOOL™ Types MR8 series incorporates a full cycle ratchet mechanism that provides a complete, positive crimp each time. Once started the ratchet mechanism does not allow the handles to be opened until after the full ratcheting cycle is completed. This provides for a completed crimp before a connector can be removed from the tool. The MR8 series of tools are specifically designed with the ratchet mechanism completely inside the body of the tool without a path to reach and defeat the mechanism. This permits the tools to be used in the most critical applications including nuclear-class 1E terminations, heavy duty industrial, utility generation, OEM, aircraft, and other applications where a dependable electrical termination is needed. 5-year limited warranty.

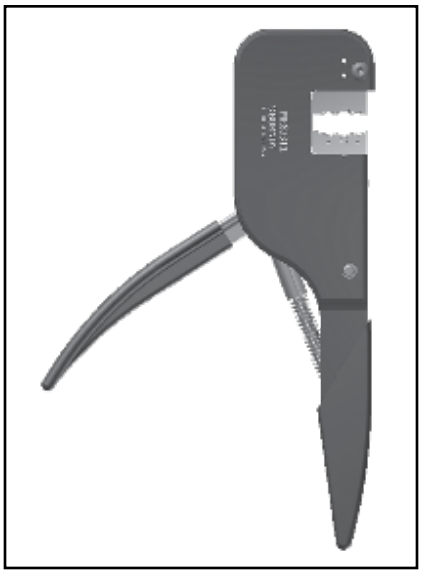

Features and Benefits

- Lightweight aluminum permits easier continuous usage
- One tool to accommodate #22-10 AWG
- Easy groove identification with color-coded dies
- Long life expectancy with fully protected ratchet mechanism
- Easy one-hand tool operation with long handle length for greater mechanical advantage
- 5-year limited warranty

SPECIFICATIONS

Length: 10-1/2"
Weight: 1-1/2 lbs

FOR USE ON

Tool	AWG Size Range	Box Catalog Types	Bulk Catalog Types
MR8-1A	#10-22 AN Copper Cable	INSULUG™	YAE
MR8-9Q	#8-18 AN Copper Cable #10-22 AWG Sol. Cable #8-22 Str. AWG Cable	YAV BOX YSV BOX T T-F	YAV, YSV, YAD, YAD-F
MR8-33S-1 MR8-33T-1	#10-18 MIL-W-5086 Str.	YSE BOX YSE-H BOX	YSE YSE-H
MR8-G96	#14-22	TP	BA
MR8-G98	#10-22	YAV, T	YAD, YAV

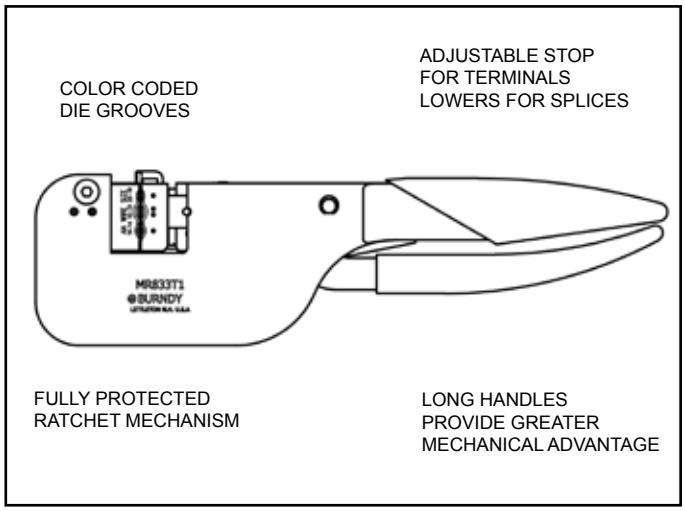

MRE10-22B, MRE10-22NV

HYTOOL™
Ergonomic Full Cycle Ratchet Hand Tools

MRE10-22B - #10 - #22
Uninsulated Terminals and Splices

MRE10-22NV - #10 - #22
Nylon and Vinyl insulated
Terminals and Splices

The MRE10-22B and MRE10-22NV ergonomic full cycle ratchet tools provide a complete positive crimp each time. The ergonomic comfort grip handles reduce operator fatigue during continuous use. Once started, the ratchet mechanism does not allow the handles to be opened until the full ratcheting cycle is completed, unless the operator actuates the emergency release lever. This provides for a completed crimp before a connector can be removed from the tool. The MRE10-22B crimps uninsulated (bare) terminals and splices ranging from #10 AWG - #22 AWG; the MRE10-22NV crimps nylon and vinyl terminals and splices ranging from #10 AWG - #22 AWG. The dies are color coded and stamped with the conductor size to provide an easy match of the die and proper BURNDY® terminal or splice. Each tool comes complete with a 5-year limited warranty.

Features and Benefits

- Ergonomic hand tools for crimping insulated and uninsulated terminals and splices
- Overmolded comfort grip handles reduce fatigue during continuous use
- Easy groove identification with color coded dies
- Full cycle ratchet tool to assure properly crimped connections
- Emergency release mechanism allows tool to open in case of misalignment or mistaken die choice
- Stop plate ensures proper location of terminals for consistent reliable connection every time
- UL Listed/CSA Certified connections when used with recommended BURNDY® terminals and splices
- Two tools accommodate nylon, vinyl and uninsulated terminals and splices #22 AWG - #10 AWG
- 5-year limited warranty

SPECIFICATIONS

Length: 10.5 in
Weight: 1.3 lbs
Width: 3 in
Warranty: 5 Year Limited Warranty

FOR USE ON

MRE10-22B for uninsulated (bare) terminals and splices #22-#10 AWG

BURNDY® Connector Family:

T- (YAD-), T-F (YAD-F), YAV-, YAV-H, YAV-R, YAV-T-F, YAV-H-F, YAV-Z, YSV, YSV-H

Die Inspection Gauges: **

#22 - #14 AWG: **PG-403-2R**
#12 - #10 AWG: **PG-403-1R**

MRE10-22NV for nylon and vinyl insulated terminals and splices #22 - #10 AWG

BURNDY® Connector Family:

TP- (BA-), TP-F (BA-EF), TP-Z (BAEZ), TP-LF (BA-EL), SP (BS), TN- (YAES-), TN-F (YAES-F), SNM* (YSES)*, YAE-N-, YAE-N-F, YAE-Z, YSE-HN, YSE-H, YAEV-
(*excludes #10 size)

Die Inspection Gauges:**

#22 - #18 AWG (Red): **PG-406-1**
#16 - #14 AWG (Blue): **PG-407-1**
#12 - #10 AWG (Yellow): **PG-408-1**

**Die inspection Gauges are sold separately

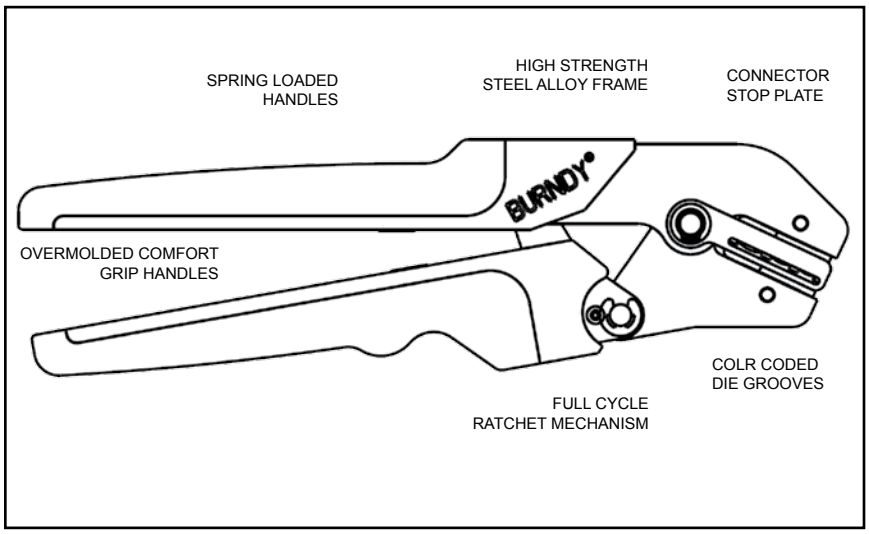

MR15, MR18, MR20

HYTOOL™

Full Cycle Ratchet Hand Tools

The Types MR15, MR18 and MR20 series HYTOOL™ incorporate a full cycle ratchet mechanism that provides a complete, positive crimp each time. Once started the ratchet mechanism does not allow the handles to be opened until after the full ratcheting cycle is completed, unless the user actuates the emergency release lever. This provides for a completed crimp before a connector can be removed from the tool.

Features and Benefits

- UL Listed for use with BURNDY® connectors
- Fully ratcheted tool to assure properly crimped connections
- Easy groove indentification with color coded dies
- Maximum crimping comfort grips
- Compact, narrow nose to work in confined areas
- 5-year limited warranty

SPECIFICATIONS

Length:	8.86"
Weight:	1.10 lbs.
Open:	5.90"
Closed:	2.50"
Wire Range:	#22-10 AWG

FOR USE ON (Wire Range 22-10 AWG)

MR15 Vinyl Insulated Terminals and Splices

Vinyl Terminals		Vinyl Splices	
TP	BA	SP	BS
TP-F	BA-EF		
TP-Z	BA-EZ		
TP-LF	BA-EL		

MR18 Nylon Insulated Terminals and Splices

Nylon Terminals	Nylon Splices
TN	SN
TN-F	SNM
YAES	YSE-HN
YAES-F	YSES

MR20 Uninsulated Terminals and Splices

Terminals		Splices
T	YAD-F	YSV
T-F	YAV-H*	YSV-H*
YAV	YAV-H-F*	
YAD		
YAV-T-F		

*Conductor crimps only.

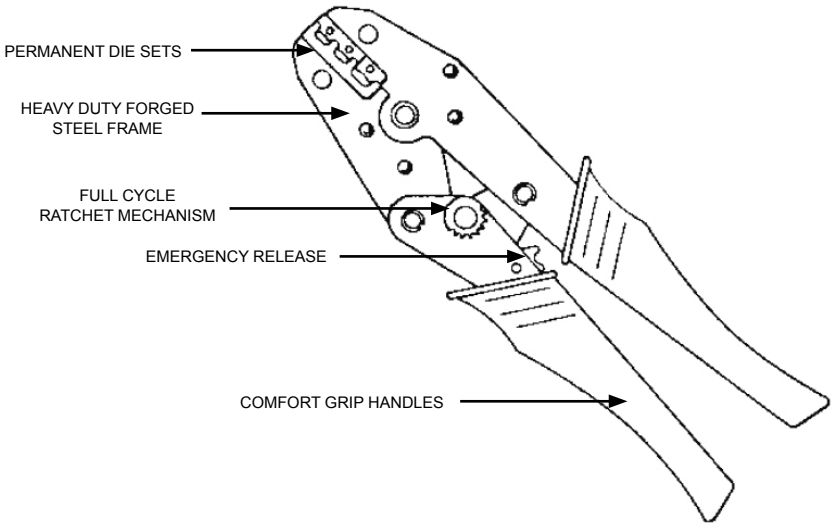

MR4C

FULL CYCLE RATCHET HAND TOOL

For #9-4 AWG Uninsulated Terminals and Splices

Hand-held full cycle ratchet tool for #9-4 AWG uninsulated terminals and splices. Full cycle feature builds in reliability and removes the human factor from the completed installation. Long handles provide greater leverage. 5-year limited warranty.

SPECIFICATIONS

Length: 11-3/4"
Weight: 2-1/4 lbs

FOR USE ON

Terminals	YAV-L
	YA-L
Splices	YSV
	YSM
	YS-L

Features and Benefits

- High strength aluminum body
- Fully protected ratchet mechanism
- Reinforced heavy duty back
- Long handles provide greater mechanical advantages
- Lightweight aluminum permits easier continuous usage
- One tool to accommodate #9-4 AWG
- Inspection (PG) gauges available to check each groove.

Groove	Gauge#
9-8	PG121-1
6	PG125-1
4	PG133-1

- Spring loaded indentor jaw holds connector in groove prior to crimping or ratchet engaging
- 5-year limited warranty

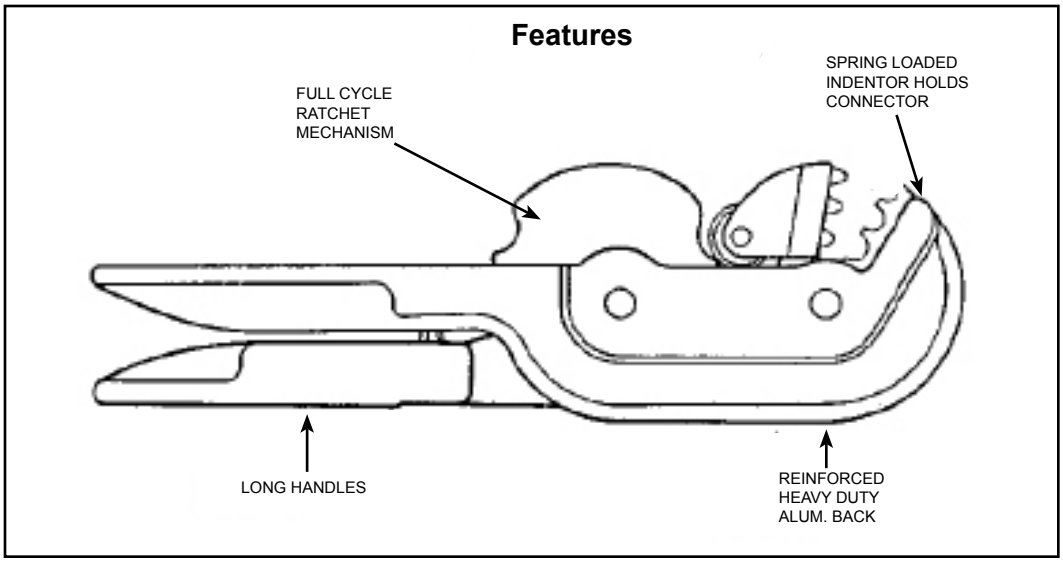

TYPE Y10MRSA1

Ergonomic Full Cycle Ratchet Hand Tool for J-Dies

#22-10 AWG Terminals and Splices

The Y10MRSA1 compression hand tool is specifically designed to accommodate BURNDY® J-Dies from #22 - #10 AWG for use on both bare and insulated connectors. J-Dies offer a positive connection with terminations exceeding SAE Pullout specifications.

The Y10MRSA1 produces the same crimp profile as the Y6NCP1 pneumatic OEM tool making this tool a perfect choice for customers wanting a hand tool to match their production tooling. 5-year limited warranty.

Features and Benefits

- UL Listed connections when using BURNDY UL Listed connectors
- Ergonomic design requires less handle force reducing user fatigue
- Compact, narrow nose, scissor action and lightweight at only 1.3 lbs
- Full cycle ratchet mechanism provides complete positive crimp every time
- Emergency release lever in case of misalignment or incorrect die choice

Features and Benefits (cont.)

- Different die inserts accommodate a range of Small HYDENT™ terminals and HYSPLICE™ splices (see table below for details)
- High-strength steel frame with rubber covered handles for longevity and comfort

SPECIFICATIONS

Weight: 1.3 lbs
Length: 10.75 in
Width: 3.08 in
Warranty: 5 Year Limited Warranty

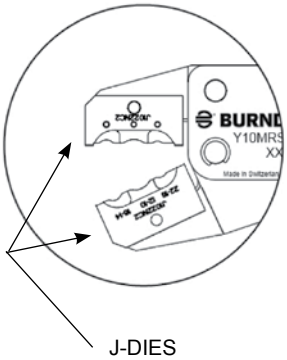

FOR USE ON

Die Set (Sold Separately)	Connector Series (#22 - #10 AWG)	Insulation Type
J1022NC1	YAE, YAE-N,YAE-N-F, YAE-Z	Nylon
J1022NC2	YAEV, YAEV-L YAEV-H, YAEV-RH,YAEV-RS	Nylon
J1022NC3	TN, YAES,TN-F, YAES-F, SN, YSE-HN	Nylon
J1022NC4	TP, BA, TP-F, BA-EF, TP-Z, BA-EZ, TP-LF, BA-EL, SP, BS	Vinyl
J1022NC5	T, YAD, T-F, YAD-F, YAV, YAV-L, YAV-H, YAV-R, YAV-RS, YAV-T-F, YAV-H-F, YAV-Z YSV, YSV-H, YSV-L	Bare*

*wire barrel only

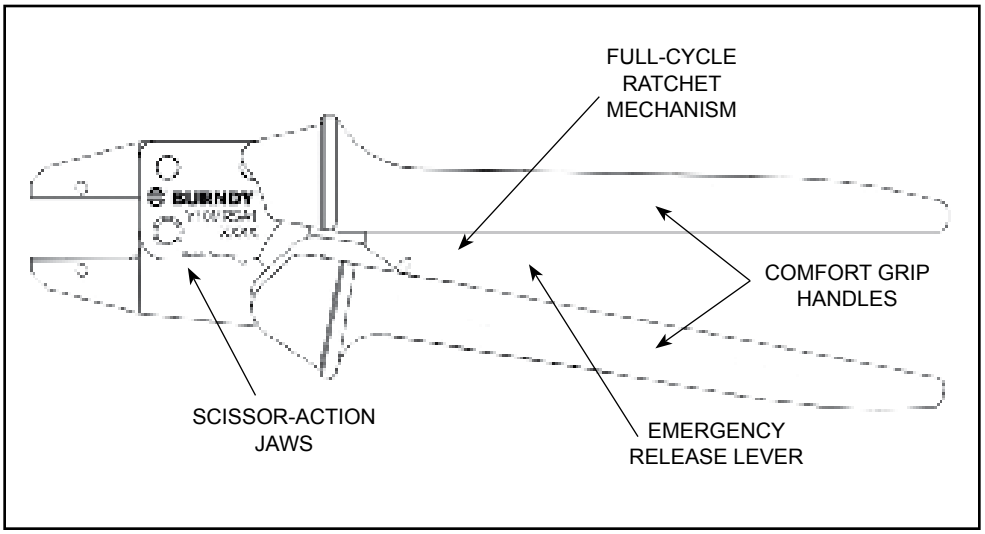

Y122CMR

HYTOOL™

Ergonomic Full Cycle Ratchet Hand Tools

#12 – #2 Copper HYDENT™ Terminals and Splices

Type Y122CMR mechanical full cycle ratchet HYTOOL™ will accommodate copper compression HYDENT™ connectors for #12 through #2 code conductor, #12 through #2 Class I flexible strand copper conductor, and #2 solid. The die index is embossed on the crimped connector for permanent inspectability.

The dies are color coded and stamped with the conductor size to provide an easy match of the die and proper BURNDY terminal or splice. A ratchet mechanism assures the tool must complete a full cycle before releasing.

The Y122CMR ergonomic full cycle ratchet tools provide a complete positive crimp each time. The ergonomic comfort grip handles reduce operator fatigue during continuous use. Each tool comes complete with a 5-year limited warranty.

Features and Benefits

- Ergonomic hand tools for crimping insulated and uninsulated terminals and splices
- Overmolded comfort grip handles reduce fatigue during continuous use
- Easy groove identification with color coded dies
- Full cycle ratchet tool to assure properly crimped connections
- Emergency release mechanism allows tool to open in case of misalignment or mistaken die choice
- UL Listed/CSA Certified connections when used with recommended BURNDY® terminals and splices
- 5-year limited warranty

Cu Lug and Splice Connectors			
Copper Wire Size	**Connector Catalog Types**	**Die Index # (Color)**	**# of Crimps**
#12 - #10 AWG	YAV10- YAV102TC- YAZV10TC- YAZV102TC-	(Yellow)	2
# 8 AWG Code	YAZ8C- YAZ8C-	49 (Red)	2
#6 AWG Code & Flex	YAZ6C- YAV6C- YAZ6C- YAZ6C- YAZ6C-	7 (Blue)	2
#4 AWG Code & Flex	YAZ4C-	8 (Gray)	2
#3 AWG #2 Sol.	YAZ3C- YAZ3C-	9 (White)	2
#2 AWG Code & Flex	YAZ2C- YAZV2C- YAZ2C-	10 (Brown)	2

Die Index Number Embossment on Connector after Crimp for inspection verification

SPECIFICATIONS

Length: 10.5”
Height: 3”
Width: 1”
Weight: 1.3 lbs

Y122CMR

Wire Range: #12-#2 AWG Class B
#12-#2 Class I Flex
#2 Solid & #3 Stranded

Y122CMRKIT

Kit Contains:
Y122CMR Full-cycle Ratchet Tool
Sturdy Metal Carrying Case

Terminals:

YAV102TC14,
YAZV10TC14,
YAZV102TC14,
YAZ8CTC14,
YAZ8C2TC38,
YAZ6CTC14,
YAZ6C2TC14,
YAZV6C2TC14FX,
YAZ6C2TC38,
YAZ6C2TC38SLBOX500,
YAZ4C2TC38,
YAZ3C2TC14,
YAZ3C2TC38SLBOX500,
YAZ2C2TC38,
YAZV2C2TC14FX,
YAZ2C2TC38SLBOX500

Y1MRTC

HYTOOL™

#8 – #1 Copper HYDENT™ Terminals, Splices, and #6 – #6 Thin-Wall C-Taps

Type Y1MRTC mechanical full cycle ratchet HYTOOL™ will accommodate copper compression HYDENT™ connectors for #8 through #1 code conductor, #8 through #2 Class I flexible strand copper conductor, and #2 solid. The color coded die wheel rotates to provide a proper match of the die and color coded connector. The die index is embossed on the crimped connector for permanent inspectability. A ratchet mechanism assures the tool must complete a full cycle before releasing.

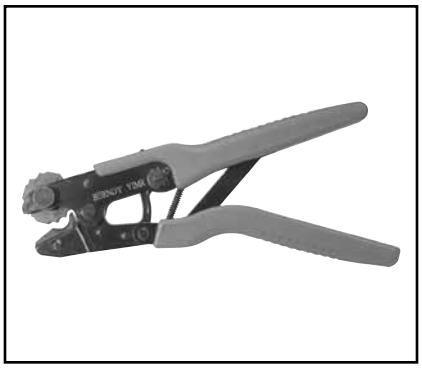

Features and Benefits

- Rotating die is color coded to match color coded connectors.
- Die index embossment allows permanent inspectability of installed connectors to insure consistently reliable and dependable connections.
- Molded comfort grips reduce fatigue during continuous use.
- Ratchet mechanism assures a complete crimp every time.
- Emergency release mechanism allows tool to be removed from connector in case of mistaken die choice or to reposition tool.
- 5-year limited warranty.

SPECIFICATIONS

Length: 9.875"
Height: 2.72" (closed)
Width: .73"
Weight: 1.7 lbs.

FOR USE ON

Cu Lug and Splice Connectors				
Copper Wire Size	Connector Catalog Types	Die Index # (Color)	# of Crimps Per Barrel Length	
			Std	Long
#8 AWG Code & Flex	YA8C- YS8C- YAV8C- YSV8C-	49 (Red)	1	2
#6 AWG Code	YA6C- YS6C-	7 (Blue)	1	2
#6 AWG Code & Flex	YAV6C- YSV6C-			
#4 AWG Code	YA4C- YS4C-	8 (Grey)	2	4
#4 AWG Code & Flex	YAV4C- YSV4C-			
#3 AWG #2 Sol.	YA3C- YS3C-	9 (White)	2	4
#2 AWG Code	YA2C YS2C-	10** (Brown)	2	4
#2 AWG Code & Flex	YAV2C- YSV2C-			
#1 AWG Code	YA1C- YS1C-	11** (Green)	2	4

** Die Index 10 (Brown Die) and 11 (Green Die) use the same die wheel crimp groove.
Die Index Number Embossment on Connector after Crimp for inspection verification.

Y1MRTC

Wire Range: #8-#1 AWG Class B,
#8-#2 Class I Flex.
#2 Solid & #3 Stranded

Y1MRKIT

Kit Contains:
Y1MRTC Full-cycle Ratchet Tool
Sturdy Metal Carrying Case
Terminals:
YA8CL, YA8CL1, YA6CL, YAV6CLTC14FX, YA4CL, YAV4CLTC516FX, YA2CL, YAV2CLTC516FX, YA1CL
Splices:
YS8CL, YS6CL, YS4CL, YS2CL, YS1CL

Y1MRTCKIT

Kit Contains:
Y1MRTC Full-cycle Ratchet Tool
Sturdy Metal Carrying Case
Terminals:
YA8CL2TC14, YA8CL2TC38, YA6C2TC38, YA6CL2TC14, YA6CL2TC14E1, YA6CL2TC14E2, YA6CL2TC38, YAV6CL2TC14E2FX, YAV6CL2TC14FX, YA4CL2TC14, YA4CL2TC38, YA3C2TC38, YA2C2TC38, YA2CL2TC38, YA2CL2TC14

Thin-Wall C-Taps:
YC4L12

Cu C-Tap Connectors				
Catalog Number	Wire Size Cu Str. AWG		Die Index # (Color)	# of Crimps
	Run	Tap		
YC10L12	14 12 10	16-14 16-14 16	49 (Red)	1
YC8L12	10 8	10 12	7 (Blue)	1
YC6L12	8 6	10-8 12-10	8 (Grey)	1
YC4L12	6 5,4	8-6 12-8	10 (Brown)	2

M8ND

HYTOOL™

Full Cycle Ratchet Hand Tool

#8-26 AWG Terminals and Splices

Hand-held full cycle ratchet tool for #8-26 AWG terminals and splices. Full cycle feature builds in reliability and removes the human element from the completed installation. Long handles provide greater leverage. 5-year limited warranty.

Features and Benefits

- Fully protected ratchet mechanism
- Reinforced heavy duty back
- Long handles provide greater mechanical advantages
- Uses all standard BURNDY® "N" dies
- Easy groove identification with color coded dies
- 5-year limited warranty

SPECIFICATIONS

Length: 10-3/4″
Width: 1-3/4″

FOR USE ON

Terminals

YAD	BA-E
YAD-F	BA-EF
YAE	BA-ES
YAE-F	BA-EZ
YAE-Z	BA-EL
YAES	
YAEV-H	
YAEV-L	
YAV	
YAV-F	
YAV-H	
YAV-H-F	

Splices

YSV	YSM
YSV-H	YRV-L

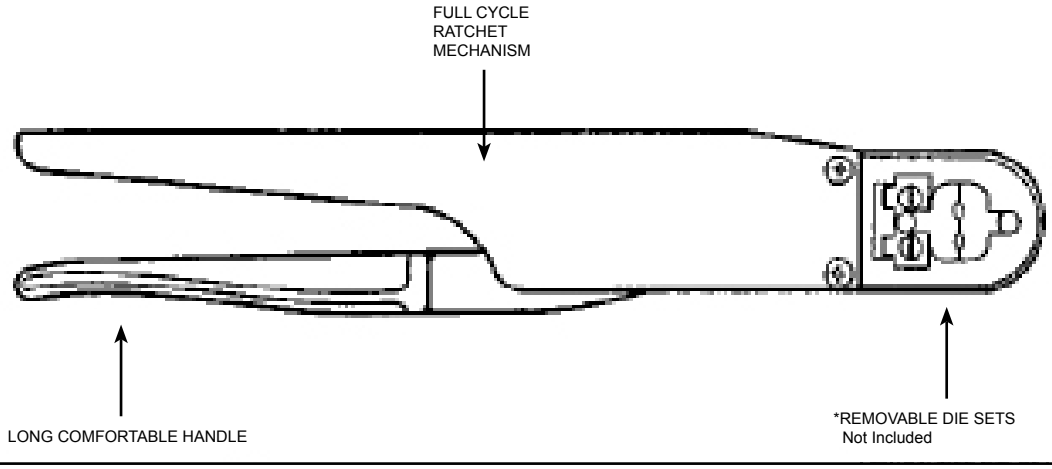

MRC840 AND MRC840AL

HYTOOL™

Hand-Operated Tool

#8 - 4/0 AWG Non-Insulated Copper and Aluminum Terminals and Splices

The MRC840 Mechanical Rotating Crimp Tool will accommodate copper compres-sion BURNDY® copper compression YA and YS series of HYLUG™ and HYLINK™ terminals and splices from #8 - 4/0 AWG stranded copper conductor. The MRC840AL Mechanical Rotating Crimp tool for Aluminum HYLUG™ and HYLINK™ terminals and splices from #8 - 4/0 AWG aluminum and copper conductors. Butting steel jaw and over center cam action assure full crimp force.

The rotatable die wheel is color-coded and stamped with the conductor size to provide an easy match of the die and color-coded BURNDY® HYDENT™ terminals and splices. YA, YS, YA-A and YS-A series of copper and aluminum terminals and splices are UL Listed when installed with these tools. Each tool comes complete with a 5-year limited warranty.

SPECIFICATIONS

Length: 26"
Height: 8"
Weight: 8-1/4 lbs

FOR USE ON

MRC840 #8 - 4/0 AWG Copper Terminals and Splices (YA, YA-L, YS, YS-L)

MRC840AL #8 - 4/0 AWG Aluminum Terminals and Splices (YA-A,YS-A)

Features and Benefits

- Comfort grip handles
  ◊ Aids in prevention of hand slippage, reduces fatigue during continuous use
- Heat treated steel jaws
  ◊ Reduces jaw buckling and misalignment under heavy loading
- Approximately 9000 crimp cycle life
  ◊ Lasts longer than imitations and will still be working when others have worn out
- Multiple grip selections on rotatable die wheels
  ◊ No lost dies, 9 position color-coded rotatable die wheels
- High strength fasteners
  ◊ Increase tool life by reducing tool wear
- Plated jaws
  ◊ Provide enhanced corrosion protection
- Engraved crimp groove (Die index number)
  ◊ Die index embossment allows permanent inspectability of installed connectors to ensure consistently reliable and dependable connections

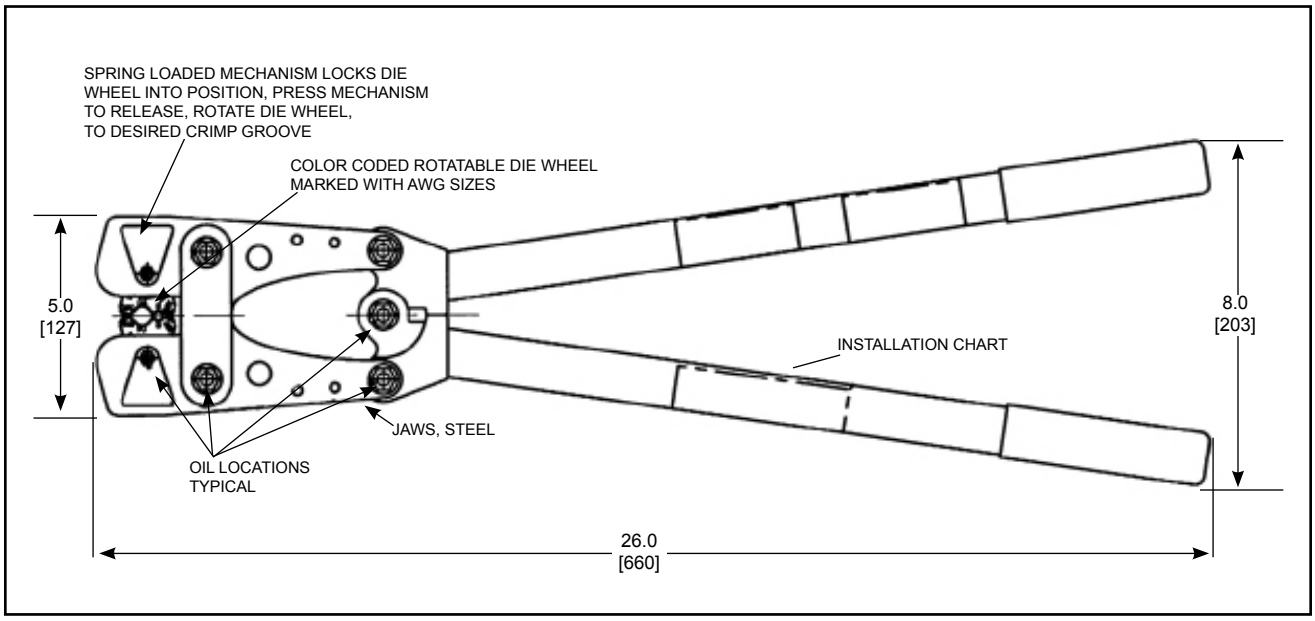

MY28, MY29 Series

DIELESS HYTOOL™

#8 Str. through 250 kcmil Copper,
#8 Str. through 4/0 str. Aluminum
Conductors

Features and Benefits

- Save on capital investment with the type MY HYTOOL™ that accommodates a wide range of connector/conductor combinations from #8 str.-250 kcmil
- Save time, money, and lower installed cost with the original dieless MY tool design. No separate dies required to purchase or to lose
- Fast and easy tool setting for the connector/ conductor combination simply by aligning the white scribe on the nest die with the wire size on the gauge for proper crimping results
- Easy to adjust nest die with knurled steel knob and machine threads
- Quality tool with precision machines indentor, component parts and tool body
- Fast, medium and high volume crimping is easily accomplished by bench mounting the type MY tool in the BMY-BCH-MT bench mount adapter. A single bolt holds the MY HYTOOL™ securely using the 0.31 dia. mounting hole in the bench mount adapter

- High quality rugged tool design manufactured from heavy duty forged steel with strong reinforced back and handles
- Covered handles available on the MY29-3C, MY29-11C and MY29-3CF HYTOOL™
- Comfort grip handles for long periods of usage
- Compression terminals and splices are UL Listed and CSA Certified when installed with type MY HYTOOL™
- 5-year limited warranty

MY29-3	#8 str.-250 kcmil Copper commercial (code) cable 30 Navy-250 Navy Copper Navy Cable #8 str.-4/0 str. Aluminum commercial (code) cable
MY29-3C (covered handles)	
MY29-3CF (fully covered)	
MY29 UNIVERSAL KIT	#8 str.-250 kcmil Copper commercial (code) cable 30 Navy-250 Navy Copper Navy cable #8 str.-4/0 str. Flexible copper mine machine cable
MY29-11	
MY29-11C (covered handles)	
MY28	#8 str.-4/0 str. Copper aircraft cable
MY28-4	#8 str.-4/0 str. Aluminum aircraft cable
MY28-6 (nylon covered connector)	#8 str.-2/0 str. Copper aircraft cable (flexible)

SPECIFICATIONS

Length: 22.65"
Weight: 8 lbs approx.
Depth: 4.86"
Width: 1.12"

FOR USE ON

TOOL	CONNECTORS
MY29-3 **MY29-3C** **MY29-3CF**	Copper-YA, YA-L, YS-L Aluminum-YA-A, YS-A
MY29-11 **MY29-11C**	Copper-YA, YA-L, YS YAV-FX YS-L, YAV-L, YSV-L
MY28	YAV-L, YSV-L
MY28-4	YAV-A-L, YSV-A-L, YAV-A-R
MY28-6	YAE-L, YAEV-RS, YAEV-H, YAEV-RH

ACCESSORIES

BMY-BCH-MT Bench Mount Adapter

MY29 UNIVERSAL KIT Contents:

MY29-11	1 EA
YA8CLBOX	50 EA
YAV6CLTC14FX	50 EA
YAV4CLTC516FX	50 EA
YAV2CLTC516FX	50 EA
YAV1CLTC38FX	50 EA
YAV25LTC38FX	10 EA
YAV26LTC516FX	10 EA
YAV27LTC12FX	10 EA
YAV28LTC12FX	10 EA
YA29LBOX	10 EA
CASE	1 EA

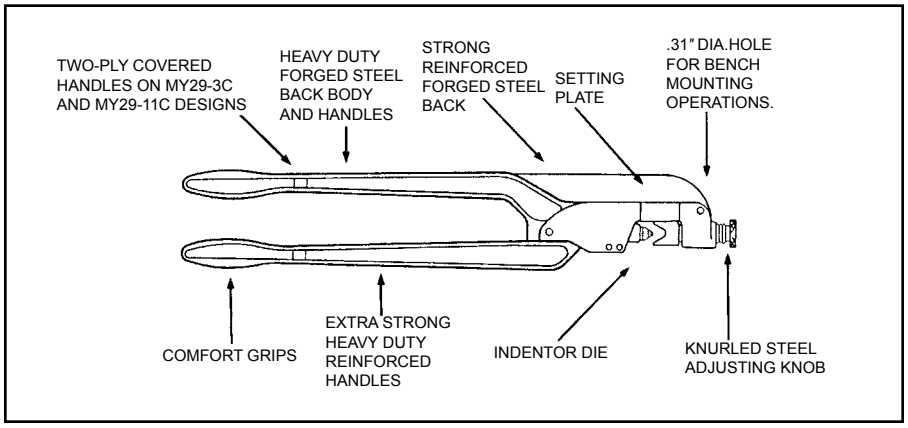

OH25

HYTOOL™

One-Hand Operation,
Dieless, Full Cycle Ratchet Tool

Installs Service Entrance
Splice Connectors
Conductor range: #10 through 1/0

The OH25 incorporates a full cycle ratchet and cam mechanism allowing an easy, one-hand crimping operation. The ratchet mechanism provides for properly completed crimps every time before the tool can be removed from the connection. The OH25 is designed to install 5/8" INSULINK™ and LINKIT™ service entrance connectors with only (1) crimp per connector end, speeding installation time. The single crimp covers the complete contact area, eliminating possible overlapping or failure to make the proper number of crimps. 5-year limited warranty.

Features and Benefits

- One crimp speeds installation
- No dies to lose
- Long dependable life with forged steel jaws and stainless steel indentor
- Convenient hole to hang tool
- Protection of internal parts provides long life
- Ratchet mechanism provides proper crimp and uniform quality installations
- Easy one-hand tool operation with spring loaded comfort grip handles
- Proven reliable with years of dependable service
- 5-year limited warranty

SPECIFICATIONS

Handle force: 50 lbs max.
Max force developed: 6,000 lbs
Weight: 2 lbs. 11 oz
Length: 12-1/4"

ACCESSORIES

Cat. No.	Description
PT4583	**Leather Holster**
PT8504	**No-Go Gauge** The PT8504 NO-GO Gauge is used to check the OH25 HYTOOL™ crimp dimensions

FOR USE ON

- 5/8" Service Entrance Sleeves
- INSULINK™ Type ES (insulated) #10 through 1/0 str.
- LINKIT™ type YSU (bare) #8 through 1/0 str.
- 5/8" neutral tension sleeves HYSPLICE™ types YS-S, YCS-R, YDS-AT #4 through 1/0
- AYP HYPLUG™ #6-1/0 str.

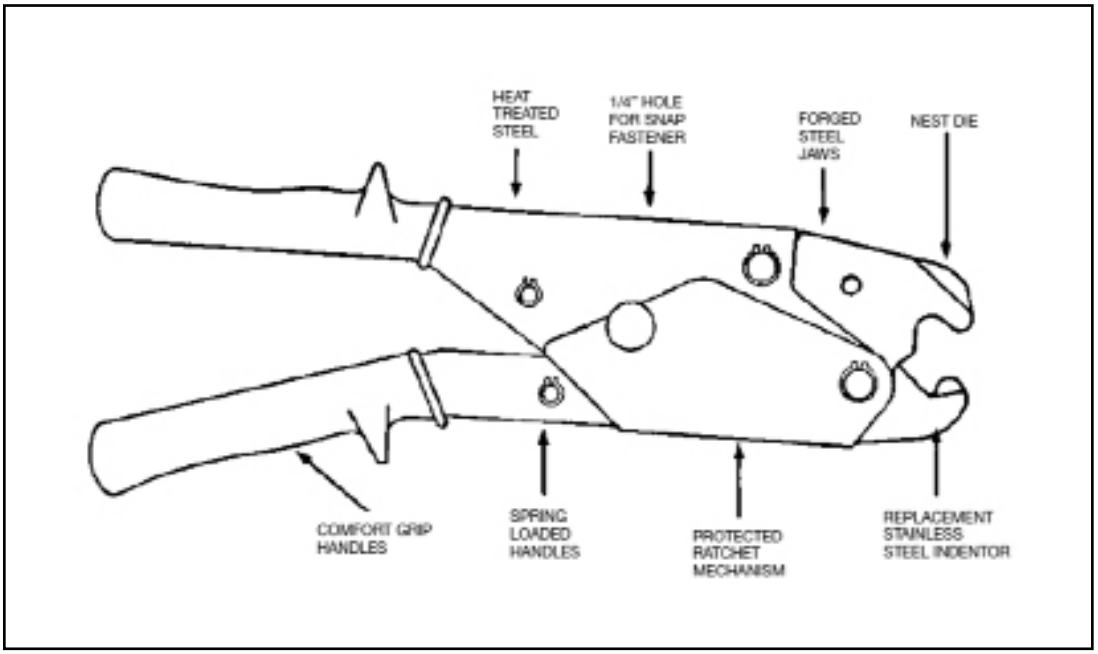

OUR840

840 POPPER™ HYTOOL™

One-Handed Operation, Overhead/ Underground, Full Cycle Ratchet Tool Installs a Range of Connectors (Taps, Splices, Terminals)

The OUR840 incorporates a full cycle ratchet and cam mechanism allowing an easy, one hand crimping action. Designed for low maintenance operation. The OUR840 has a five (5) year limited warranty. The ratchet mechanism provides for properly completed crimps every time before the tool can be removed from the connection. With nest and indentor dies, it will install 5/8" INSULINK™ and LINKIT™ service entrance connectors with only one (1) crimp per end. With the use of reduced handle force "X" dies, additional splices, taps, and terminals can be properly installed. The die inserts snap into the permanent groove easily with one hand and lock securely in the tool with the spring loaded positive lock die retainer buttons. Tool operation is simple:

A. Slip the tool over the connector
B. The first few strokes grip the connector
C. Stroke until automatic tool release signifies a completed compression

Features and Benefits

- Allows proper crimping of sleeves and terminations in crimping underground applications
- Proper crimps are assured with butting surface inspection and full cycle ratchet mechanism
- Uses reduced handle force "X" dies
- One tool for most service applications
- Improved service through redesign and improvement of many internal parts
- Easier tool operation is provided with mini strokes and anti-slip grips
- Nest and indenter dies available
- W28K cutter die permits use of OUR840 tool as a cable cutter. Conductor range: #4-4/0 ACSR, Aluminum and Copper
- UL Listed connections when color coded "X" dies are used on BURNDY® connectors

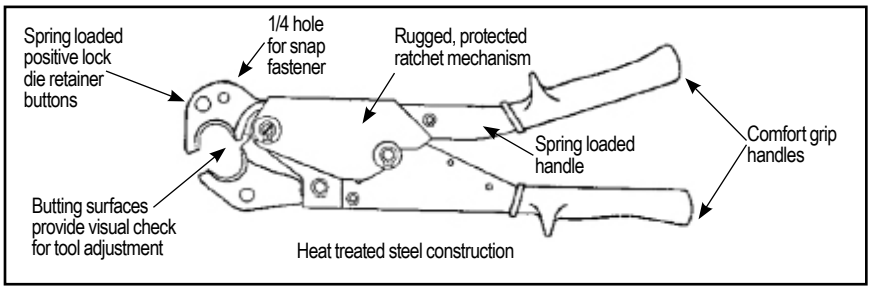

SPECIFICATIONS

Max. Crimp Force: 8,000 lbs
Max Handle Force: 8 lbs. approx.
Weight: 2 lbs. 14 oz.
Length: 13"

FOR USE ON

SELECTED APPLICATIONS
Copper Conductors from #8 AWG to 250 kcmil
Aluminum Conductors from #8 AWG to 4/0 AWG

ACCESSORIES

Cat. No.	Description
PT4583	**Leather Holster:** • Top grain cowhide saddle leather • Large grommet (Order Separately)
OUR840-WC	**Metal carrying case with die tray:** • Holds one (1) OUR840 and up to eleven (11) "X" dies. Dies Sold Separately

OUR840 Dies:

X-Dies Catalog Number	Die Index	Recommended "W" Die Crimp Ratio
XNBG	BG	2*
XBG	BG	2
X161	161	3*
X241	241	2
X245	245	2
X247	247	2
X249	249	2
X660	660	2
X840	840	1
XOH25	-	OH 25 Equiv.

* Overlap crimps
•"W" Dies with a die index listed above are not recommended for the OUR840. Since the standard "W" Dies are wider than the "X" Dies, additional crimps are required depending on the connector and the die index.

Copper Conductor	Copper Connector		Color Code	Die	OUR-840		
	HYLUG™ Terminal	HYLINK™ Splice			Die Index	# Crimps Std.	# Crimps Long
#8 AWG Str.	YA8C-	YS8C-	Red	X8CRT	49	1	2
#6 AWG Str.	YA6C-	YS6C-	Blue	X5CRT	7	1	2
#5 AWG Str.	YA5C-	YS5C-	Blue	X5CRT	7	1	2
#4 AWG Str.	YA4C-	YS4C-	Gray	X4CRT	8	1	2
#2 AWG Str.	YA2C-	YS2C-	Brown	X2CRT	10	1	2
#1 AWG Str.	YA1C-	YS1C-	Green	X1CRT	11	1	2
1/0 AWG Str.	YA25-	YS25-	Pink	X25RT	12	2	4
2/0 AWG Str.	YA26-	YS26-	Black	X26RT	13	2	4
3/0 AWG Str.	YA27-	YS27-	Orange	X27RT	14	3	6
4/0 AWG Str.	YA28-	YS28-	Purple	X28RT	15	3	6
250 kcmil	YA29-	YS29-	Yellow	X29RT	16	4	8
			W-VT Dies may be substituted				

Aluminum Conductor	Aluminum Connector		Color Code	Die	OUR-840	
	HYLUG™ Terminal	HYLINK™ Splice			Die Index	# Crimps
#8 AWG Str.	YA8CA-	YS8CA-	Blue	X8CART	374	2
#6 AWG Str.	YA6CA-	YS6CA-	Gray	X5CART	346	2
#4 AWG Str.	YA4CA-	YS4CA-	Green	X4CART	375	3
#2 AWG Str.	YA2CA-	YS2CA-	Pink	X2CART	348	4
#1 AWG Str.	YA1CA-	YS1CA-	Gold	X1CART	471	3
1/0 AWG Str.	YA25A-	YS25A-	Tan	X25ART	296	4
2/0 AWG Str.	YA26A-	YS26A-	Olive	X26ART	297	4
3/0 AWG Str.	YA27A-	YS27A-	Ruby	X27ART	467	4
4/0 AWG Str.	YA28A-	YS28A-	White	X28ART	298	6

MD6-8

HYTOOL™

Hand-Operated Tool

Installs full range of connectors (taps, splices, terminals): #14 through 4/0
Applications: Full Tension and Non-Tension

The MD6-8 installs almost all of the line, pole and house connections in the BURNDY Compression Connector Program with only one (1) extra die set (W-BG). The tool has two (2) permanent die grooves, "O" and "D3" for distribution tap connectors. The "D3" groove also serves as a seat for die inserts to install additional splices, taps and terminal connectors. The die inserts snap into the D3 groove easily with one hand and lock securely in the tool with the spring loaded positive lock die retainer buttons.

The MD6 series of tools have a five (5) year warranty and are designed to provide over 90,000 reliable crimps installing full-tension and non-tension connectors.

The MD6-K accepts KEARNEY™ type "O" dies and BURNDY® "W" and "X" dies with the KWADP adapter.

KEARNEY™ is a registered trademark of COOPER TECHNOLOGIES COMPANY.

Features and Benefits

- Proper crimps are assured with butting steel jaws
- Increased strength and greater bearing area is provided with larger steel bolts
- Fast, easy, one-hand die insertion
- No lost dies with spring loaded positive lock die retainer buttons
- Over 90,000 crimps provided with Teflon impregnated steel backed bronze bushings
- Full crimp force assured with over center cam action
- Easy tool adjustment with allen wrench
- Operator protection provided with butt stops and heat shrink tubing
- Long life expectancy provided with select clear hickory handles and lightweight high strength aluminum alloy castings
- Easier tool operation is provided with bent handles and anti-slip grips

MD6 Tool Variations

MD6	Standard MD6 with permanent "BG" (5/8) and "D3" grooves. Installs CABLELOK CRIMPIT™ and HYCRIMP™ Tap Connectors with one additional die insert (W-O). All other tool features and connector ranges are the same as the MD6-8 described above.
MD6-4	Standard MD6 with permanent "BG" (5/8) and "D3" grooves and straight fiberglass handles 24" long. Fiberglass rated at 100 kV per foot for 5 minutes.
MD6-14	Standard MD6 with permanent "BG" (5/8) and "D3" grooves and straight fiberglass handles 19" long including bent aluminum grips. Fiberglass rated at 100 kV per foot for 5 minutes.
MD6-12	Standard MD6-8 jaws with permanent "O" and "D3" grooves and straight fiberglass handles 24" long. Fiberglass rated at 100 kV per foot for 5 minutes.
MD6-6	"Snub-Nose" variation of MD6 has a permanent "D3" groove in jaw. Recommended for use where space for tool jaw is limited.
MD6-37	Permanent 161, 162, 163, 171 dies in the jaw (J, M & P, T & X).
MD6-38	Permanent K, BG, C, dies in the jaw.
MD6-K	"Snub-Nose" permanent KEARNEY™ groove.

SPECIFICATIONS

Crimp Force:	9,000 lbs
Length:	25-3/8"
Weight:	6 lbs

Quality Unsurpassed!
Life cycle tested under full operating forces for over 90,000 cycles successfully without adjustment or any parts replacement.

FOR USE ON

- Copper, Aluminum, ACSR, Copperweld, Alumoweld, Steel, 6201 5005, Compressed and compact conductors
- Copper Taps: #10 sol. - 2/0 str.
- Aluminum, ACSR Taps: #14 sol. - 4/0 ACSR
- Stirrups: #6 ACSR - 4/0 ACSR
- Overhead Full Tension Deadend, Full Tension Splices, Non Tension Splices, and Terminals Conductor Range: #10 str. - 4/0 ACSR
- Code conductor connectors: #6 - 4/0 str. Copper and Aluminum

To Check Tool Adjustment
Simply close the tool handles until the jaws initially butt. When the orange alignment grooves are in line, the tool is in correct adjustment.

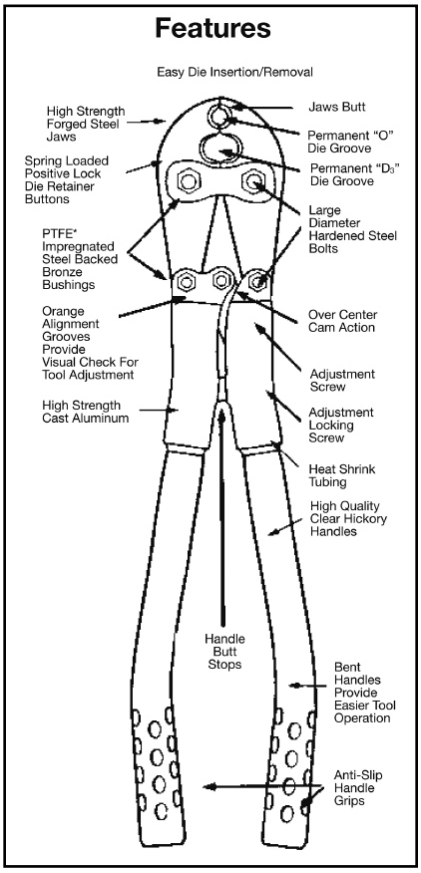

MD7 POSI-PRESS™

HYTOOL™

Hand-Operated Tool

Installs full range of connectors, (taps, splices, terminals):
#14 AWG through 4/0 AWG

Applications: Full-Tension and Non-Tension

The MD7 POSI-PRESS™ HYTOOL™ is a composite polymer handle installation tool that requires no adjustment for the life of the tool. This assures users of the MD7 tool, that all connections installed with the MD7 POSI-PRESS™ HYTOOL™ are consistent and reliable over the life of the tool. This new technology tool provides a visual wear indicator that makes verification of the tool's condition easy to determine. Once the tool has worn beyond its useful life, it can be returned to the BURNDY® Tool Repair Center for re-fitting at a fraction of the price of a new tool.

The MD7 series of tooling has a 5 year warranty and is designed to provide over 99,000 reliable crimps installing both full-tension and non-tension connectors.

The MD7-8 POSI-PRESS™ HYTOOL™ installs almost all of the line, pole, and house connection in the BURNDY® Compression Connector Program with only one (1) extra die set (W-BG). The MD7-8 tool has two (2) permanent die grooves, "O" and D3" for distribution tap connectors. For other tool versions, see the MD7 Tool Variations sections below. The "D3" groove also serves as a seat for die inserts to install splices, taps, and terminal connectors. The die inserts snap into the "D3" groove easily with only one hand, and lock securely in the tool with the spring loaded, positive lock, die retainer buttons. Handles have been tested at 100 kV per foot for 5 minutes.

Features and Benefits

- Ergonomically designed, one-piece, composite polymer handles
- Comfort grip handles
- Time-proven steel jaw designs
- No tool adjustment required
- 99,000 crimp/cycle life
- Positive lock, spring loaded die retainer buttons
- Permanent "D3" die groove
- PTFE impregnated steel/bronze bushings and stainless steel pins
- Electroless nickel plated jaws and jaw links
- Easier tool operation due to unique handle design, and anti-slip grips
- Improves operation by preventing slipping
- Proper crimps are assured with butting jaws
- Provides reliable and consistent crimps every time
- Lasts up to 6 times longer than cheap imitations, and will still be working when others have long since worn out
- No lost dies and one-hand die insertion
- Allows use of the complete line of BURNDY® "W" and "X" die inserts
- Increases life of tool by reducing tool wear
- 5-year limited warranty

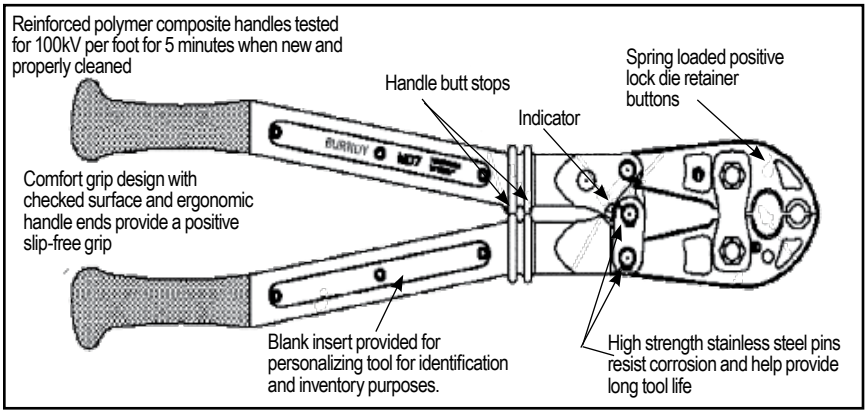

SPECIFICATIONS

Crimp Force:	9,000 lbs
	60 lbs Handle Force
Length:	25"
Width:	8" (at handle end)
	4-1/2" (at jaw end)
Weight:	7 lbs

Unsurpassed Quality that no one else can match!
Life cycle tested under the full range of operating forces for over 99,000 cycles successfully without failure or any parts replacement.

FOR USE ON

- Copper, Aluminum, ACSR, Copperweld, Alumoweld, Steel, 6201, 5005 Compressed and compact conductors
- Copper Taps: #10 sol. - 2/0 str.
- Aluminum, ACSR Taps: #14 sol. - 4/0 ACSR
- Stirrups: #6 ACSR - 4/0 ACSR
- Overhead Full Tension Deadend, Full Tension Splices, Non Tension Splices, and Terminals Conductor Range: #10 str. - 4/0 ACSR
- Code conductor connectors: #6 - 4/0 str. Copper and Aluminum

MD7 Tool Variations

MD7-8 MD7 with permanent "O" and "D3" grooves. Installs almost all of the line, pole, and house connections in the BURNDY® Compression Connector Program with only one (1) extra die set (W-BG).

MD7-6 "Snub-Nose" variation of MD7 has a permanent "D3" groove jaw. Accepts the full-line of BURNDY® "W" and "X" die inserts. Recommended for use where space for tool jaw is limited.

MD7 Standard MD7 with permanent "BG" (5/8) and "D3" grooves. Installs CABLELOK™ CRIMPIT™ and HYCRIMP™ Tap connectors with one (1) additional die insert (W-O). All other tool features and connector ranges are the same as the MD7-8.

MD7-34R POSI-PRESS™

HYTOOL™

Hand-Operated Full Cycle Ratchet Tool

The MD7-34R POSI-PRESS™ HYTOOL™ has a full stroke ratchet that assures the user has cycled the tool completely for a consistent crimp every time. The tool handles are manufactured from a new reinforced composite polymer that requires no adjustment for the life of the tool. This new tool design assures users that all connections installed with the MD7-34R are consistent and reliable over the life of the tool. A visual wear indicator provides easy verification of the tool's condition. An emergency ratchet release allows tool removal in case of mistaken die choice or to reposition tool. The MD7-34R crimps color coded lugs and splices for #8-500 kcmil class B code conductor and #8-350 kcmil Cu Flex conductor. It will also crimp thin wall C-Taps from #12 - 3/0 AWG class B code conductor. The color coded W-VT dies snap into the jaw grooves easily with only one hand and lock securely into the tool with the spring loaded, positive lock, die retainer buttons. The die index number is engraved in the crimping groove to emboss the finished connection. This makes inspection and verification of proper installation an easy process. Due to the one piece handle design, if the tool ever wears beyond it's useful life, it can be returned to the BURNDY® Tool Repair Center for refitting at a fraction of the price of a new tool. A rubber covered version, the **MD7-34R-C**, is available.

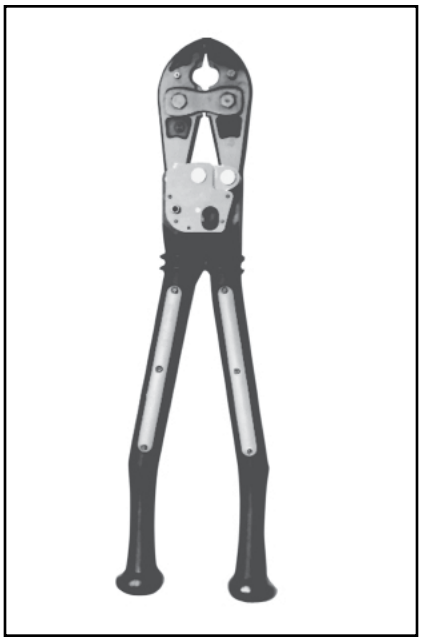

Features and Benefits

- Full Stroke Ratchet Mechanism
- Ergonomically designed, one piece, composite polymer handles
- Comfort grip handles
- Time-proven forged steel jaw designs
- No tool adjustment required
- Positive lock, spring loaded die retainer buttons
- PTFE impregnated steel/bronze bushings and stainless steel pins
- Color Coded Dies
- Die index embossed on finished connection
- Handle of reinforced composite polymer
- Easier tool operation due to unique handle design, and anti-slip grips
- Grips and handle knobs improve operation by preventing slipping

SPECIFICATIONS

Crimp Force:	9,000 lbs
Length:	26"
Width:	8" (at handles) 4-1/2" (at jaws)
Jaw Covering:	EPDM Rubber (MD7-34RC)
Handle Material:	Reinforced composite polymer
Warranty:	5 year Limited Warranty

MD7-34 Tool Variations

MD7-34R	#8-500 Cu HYDENT™, Full Stroke Ratchet
MD7-34R-KIT1	MD7-34R, metal carrying case and all dies for #8-500 kcmil Cu HYDENT™ and C-Taps
MD7-34	Supplied without the ratchet mechanism
MD7-34-KIT1	MD7-34, metal carrying case, and all dies for #8-500 kcmil Cu HYDENT™ and C-Taps for #12 - 3/0 AWG.

FOR USE ON

- Copper Lugs and Splices #8-500 kcmil Types YA, YA-L, YA-L-TC, YA-L-NT, YS-L, YS, YST, YA-TC
- Copper Lugs and Splices #8-350 kcmil Flex. Types YAV-L-TC-FX, YA-LB, YA-TC-FXB, YSV-L, YAV-L-NT-FX, YAV-L-FX, YAV-FXB
- Copper Battery Lugs #8-350 kcmil Flex Types YAG-TC-LD
- Thin wall C-taps #12 - 3/0 AWG Types YC-L

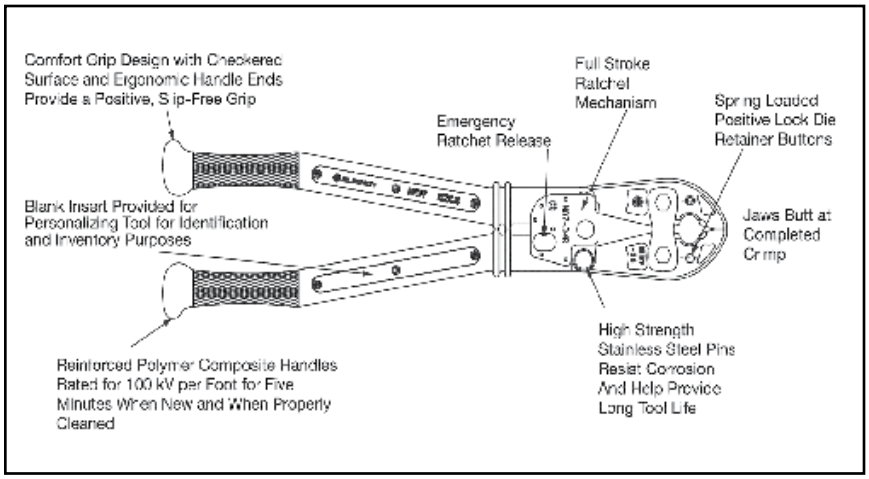

- Butting jaws assure proper crimps
- Wear indicator allows instant inspection of calibration
- Full cycle ratchet assures complete consistent crimp
- High grade hardware increases tool life and durability
- Allows use of complete line of BURNDY® W-VT, W-RT and X-RT series dies
- Color Coded dies simplify selection of correct connector and die combinations
- Die index embossment on crimp provides easy inspection and quality assurance
- 99,000 crimps without needing adjustment
- 5-year limited warranty

MD6 HOTSTICK TOOLS

The MD6 Type Hotstick tools incorporate either a pantograph toggle action handle or straight handles. They use standard MD6 Type jaws so that they will do everything the standard MD6 will do only they can be used for energized installations. The fiberglass handles are rated at 100 kV per foot for 5 minutes. 5-year limited warranty.

Features and Benefits

- The MD6-HS type Hot-Line Tool incorporates a pantograph, toggle-action design to install connectors with the same handle force as the standard MD6-type tooling
- Angled head and lightweight makes connector installation easier
- Supplied with MD6, MD6-6, and MD6-8 jaw variations
- The MD6-AH type Hot-Line Tool incorporates an angled head to make hard to reach hot-line connections easier
- Straight 48" fiberglass handles rated at 100 kV per foot for five minutes
- 5-year limited warranty

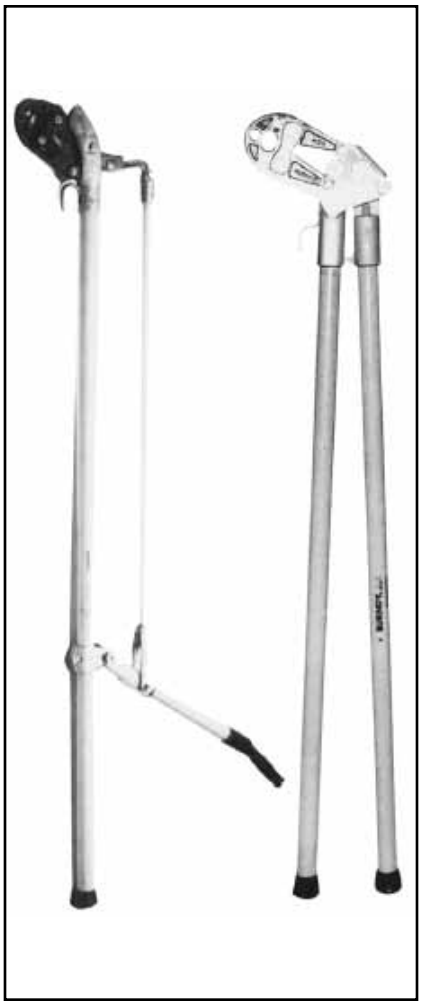

SPECIFICATIONS

Cat. No.	Handle Length	Weight/Lbs.
MD6HS60	60"	15.5
MD6HS72	72"	16.5
MD6-6HS60	60"	15.5
MD6-6HS72	72"	16.5
MD6-8HS60	60"	15.5
MD6-8HS72	72"	16.5
MD6-AH48	48"	13.75
MD6-8AH48	48"	13.75

FOR USE ON

- Copper, Aluminum, ACSR, Copperweld, Alumoweld, Steel, 6201, 5005, Compressed and compact conductors
- Copper Taps: #10 sol. - 2/0 str.
- Aluminum, ACSR Taps: #14 sol. - 4/0 ACSR
- Stirrups: #6 ACSR - 4/0 ACSR
- Overhead Full Tension Deadend, Full Tension Splices, Non Tension Splices, and Terminals Conductor Range: #10 str. - 4/0 ACSR
- Code conductor connectors: #6 - 4/0 str. Copper and Aluminum

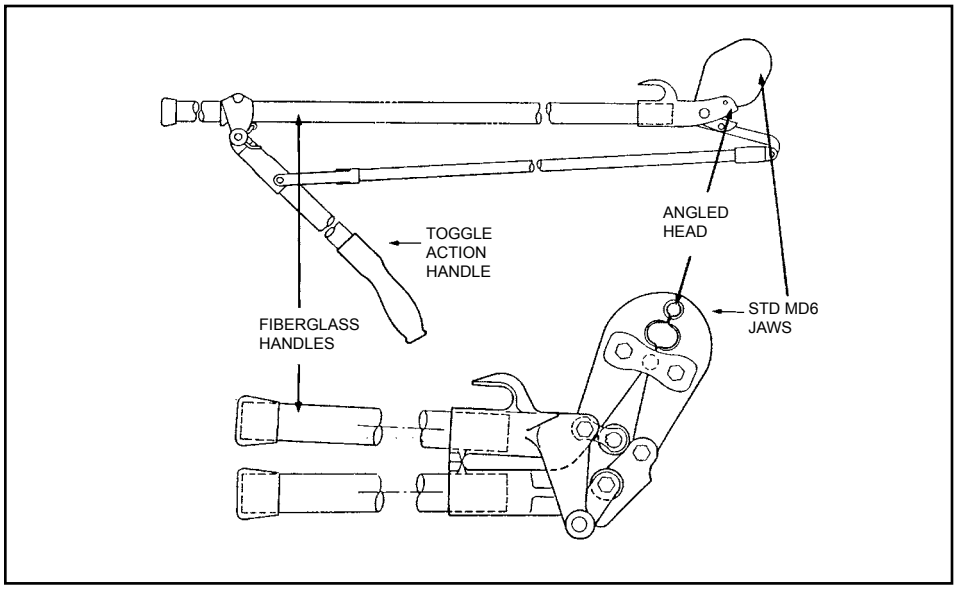

MD6/MD7

TOOLING ACCESSORIES

Dies for Special Applications

(See present installation tool index in reference section for complete W-Die listing.)

Cat. # **W-BG**
The W-BG die is a double groove die set requiring only one (1) crimp per end on service entrance sleeves and only 1/2 the number of crimps on other 5/8" sleeves.

Cat. # **W-28K**
The W-28K cutter die permits use of MD6/MD7 type tools as a cable cutter. Conductor range: 4-4/0 ACSR, Aluminum or Copper.

Protective Jaw Covers

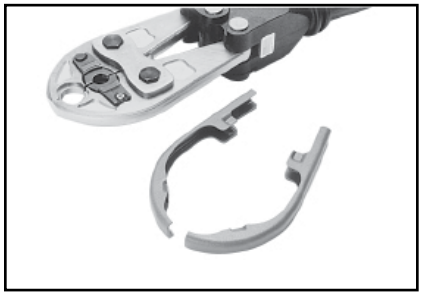

Cat. # **MD6-CP1**
The laminated vinyl covers, are provided for the MD6/MD7 HYTOOL™ to avoid damage. Compact in size, the covers snap easily into place over the jaw edges without obstructing vision.

The MD6-CP1 fits all MD6/MD7 tool variations except the Snub-Nose MD6-6/MD7-6 type design. Supplied as a set.

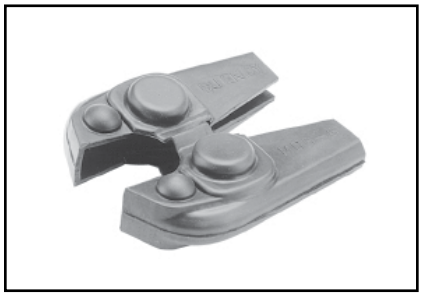

Cat. # **PT6744**
The semi-rigid Neoprene cover, a nonconductive material, is provided for the MD6-6 "Snub-Nose" HYTOOL™ to avoid damage. Fits all MD6-6 Snub-Nose variations.

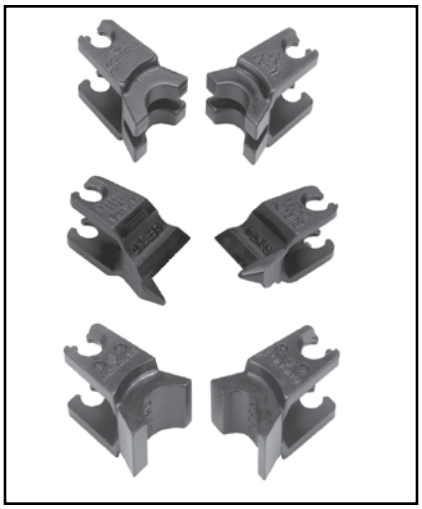

Non-Bowing Dies

Cat. # **W-687** and **W-702**
The Non-Bowing die sets install one-piece, full-tension UNISPLICE™ sleeves on ACSR conductors without bowing.

UNISPLICE™ ONE-PIECE SLEEVES:

W-687 Installs:	#4 ACSR 6/1, 7/1-YDS4RL and YDS4RLY #2 ACSR 6/1-YDS2RL and YDS2RLY
W-702 Installs:	#2 ACSR 7/1-YDS021RL and YDS021RLY 1/0 ACSR-YDS25RL and YDS25RLY

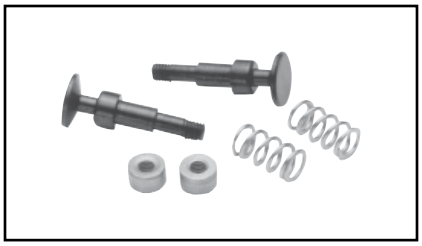

Cat. # **PT4931-1**
Die Button Repair Kit

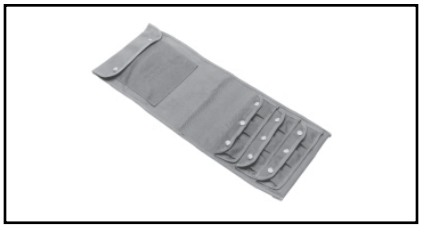

Cat. # **PT4925**
Canvas Bag
The PT4925 is a sturdy canvas bag for protecting the MD6/MD7 tools with or without rubber covers plus up to (9) die sets. Dies purchased separately.

Cat. # **CASEWDIES**
Compact Die Case
Compact die case for (12) "W" or "X" die sets. Dies purchased separately.

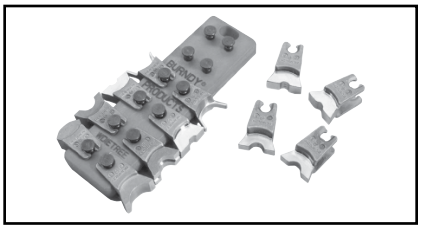

Cat. # **WDIETREE**
W Die Holder
This innovative W-Die Holder replaces the standard metal carrying case designed for BURNDY® W-Dies. Its straight forward design allows for easy insertion of the W-Dies onto the holder, providing greater flexibility and secure storage.

Cat. # **PT4952-1**
Steel Carrying Case
The PT4952-1 steel carrying case provides storage and protection for the MD6 tools with or without rubber covers plus up to (18) die sets. Tool and die sets not included. Fits MD6, MD6-6, MD6-8, MD6-14, MD6-37, MD6-38, MD7 and MD7-6.

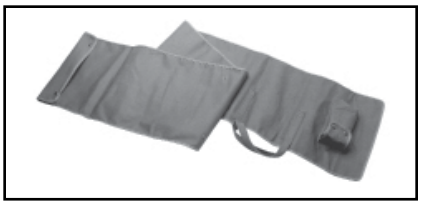

Cat. # **PT6733**
Hot-Line Tool Carrying Bag
The PT6733 is a heavy-duty, adjustable canvas bag for the storage and protection of Hot-Line Tools. The bag accommodates 48, 60 and 72 variations of the MD6 and Y35 Hot-Line Tools.

WIREMIKE™

RK194-2

The wire mike is a useful instrument designed for measuring ACSR, stranded and solid conductors, I.P.S. tubing, rigid and thinwall conduit, plus inside and outside dimensions of tubing and pipe sizes. A ruler is also included.

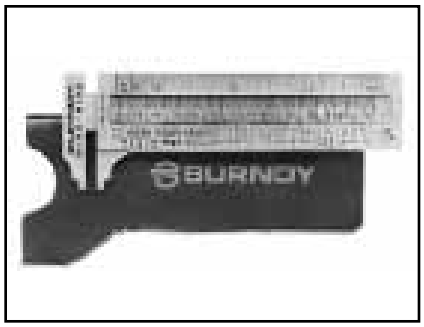

FOR USE ON

- ACSR: #6 - 336.4 (26/7) str.
- Stranded: #18 str. - 2,000 kcmil
- Solid: #20 sol. - 4/0 sol.
- IPS Tubing (Cu/Al) & Rigid conduit: 1/4" - 2-1/2"
- Tubing sizes: 3-1/8" inside max. 2-15/16" outside max.
- Thinwall conduit: 3/8"- 2-1/2"

Features and Benefits

- Provides quick and easy identification of commonly used conductors (ACSR, stranded and solid AWG)
- Provides quick and easy identification of IPS tubing and rigid conduit
- Provides quick and easy identification of thinwall conduit
- Measures I.D. and O.D. of tubing
- Provides easy conversion of information
- Strong, durable, long lasting, high quality stainless steel wire mike
- Convenient size makes it easy to carry
- Available with your company name and logo. Customer must supply camera ready artwork. Contact BURNDY® for details. Minimum order required

Y6NCP1, Y6NCP1SD

PNEUMATIC OEM TOOL

The BURNDY® Y6NCP1 and Y6NCP1SD pneumatic tools are designed for OEMs seeking medium volume production tooling for crimping loose-piece terminals and splices. The tools offer a UL Listed connection for a wide variety of BURNDY® connectors.

With a 360° rotatable head, the Y6NCP1 and Y6NCP1SD are the perfect handheld presses for remote operation in confined work areas. Additionally they can be easily configured into a bench-mount design for prolonged, steady use.

Both tools come with a 1-year limited warranty.

Features and Benefits

- UL Listed connections when using BURNDY UL Listed connectors
  - ◊ Provide installer confidence
- Built-in safety features
  - ◊ Ensures safe set-up
  - ◊ Prevents accidental actuation
- 360° rotating head
  - ◊ Ease of use in confined areas
- J-dies provide high pull-out force
  - ◊ Reliable crimp performance
- SD-dies use an industry-standard die envelope
  - ◊ Dies fit in a wide variety of tools

Tool Supplied With

	Y6NCP1	Y6NCP1SD
Pneumatic crimp tool	✓	✓
Tool Case	✓	✓
1/8" NPT air hose	✓	✓
Crimp head for J-dies	✓	
J-dies		
Crimp head for SD-dies		✓
SD-dies		✓

ACCESSORIES

Foot Switch : **Y6NCP1FTSW**
Bench Mount Unit: **Y6NCP1BMNT**
Crimp heads
for J-dies: **J6NCP1CH**
for SD-dies: **SD10NCP1CH**

See table for Die Specifications

Tool Specifications

	Y6NCP1	Y6NCP1SD
Cable Sizes	#22 - #4 AWG	#22 - #10 AWG
Length:	12.88"	
Diameter:	2.55"	
Weight:	4.4 lbs.	
Air Pressure:	90-110 PSI	
Crimp Motion:	Scissor Action	
Safety Shield:	Yes	
Pull out Force:	Exceeds MIL Spec/SAE*	Exceeds UL 486A/B
Dies:	J-dies	SD-dies[1]

* Excludes YAES-TN terminals with #12 AWG wire.
[1] SD-die crimp profiles are identical to the MRE1022B and MRE1022NV crimp profiles.

Die Specifications

Y6NCP1 (J-dies & Y2CNC purchased separately)	Y6NCP1SD (SD-dies)	Range	Type	Applicable Connectors
J1022NC1	**BECNVSD (die set included)**	#22 - #10	Nylon	YAE, YAE-N, YAE-N-F, YAE-Z
J1022NC2				YAEV, YAEV-L, YAEV-H YAEV-RH, YAEV-RS
J1022NC3				TN, YAES, TN-F, YAES-F SN, YSE-HN
J1022NC4			Vinyl	TP, BA,TP-F, BA-EF, TP-Z, BA-EZ TP-LF, BA-EL, SP, BS
J1022NC5	**BECBSD (die set included)**		Bare	T, YAD, T-F, YAD-F, YAV, YAV-L YAV-H, YAV-R, YAV-RS, YAV-T-F YAV-H-F, YAV-Z, YSV, YSV-H, YSV-L
Y2CNC w/ J8CNC	-	#8	Bare	YA, YAV YS & YSV
Y2CNC w/ J6CNC	-	#6		
Y2CNC w/ J4CNC	-	#4		

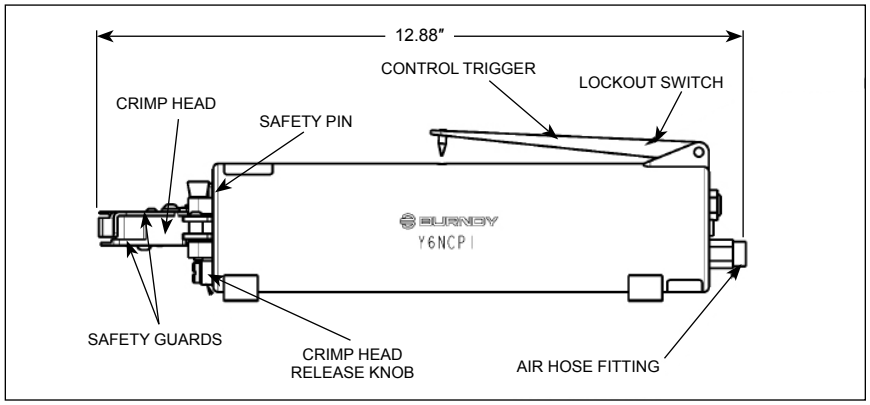

Y29NC

PNEUMATIC HYPRESS™

The Y29NC Pneumatic HYPRESS™ operates on 85-100 PSI and will install insulated and uninsulated terminals from #8-2/0 copper. Uses DV type nest with Y29 type indentor.

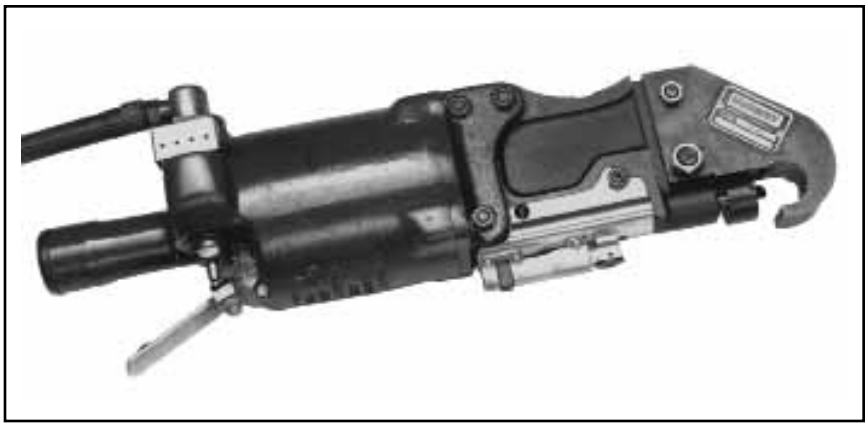

Features and Benefits

- Portable or bench mountable
- Adjustable blow off valve to ensure proper indenting force
- Uses DV type nest with Y29 type indentor
- Hand operated
- 5-year limited warranty

SPECIFICATIONS

Weight: 12-1/2 lbs
Length: 17-1/2"
Air line pressure: 85 - 100 PSI

FOR USE ON

Wire Range: #8–2/0 Cu
YAEV-L, YAEV-H, YAEV-RS, YAEV-RH, YAV-L, YAV-R, YAV-RS, YSV-L, YSM

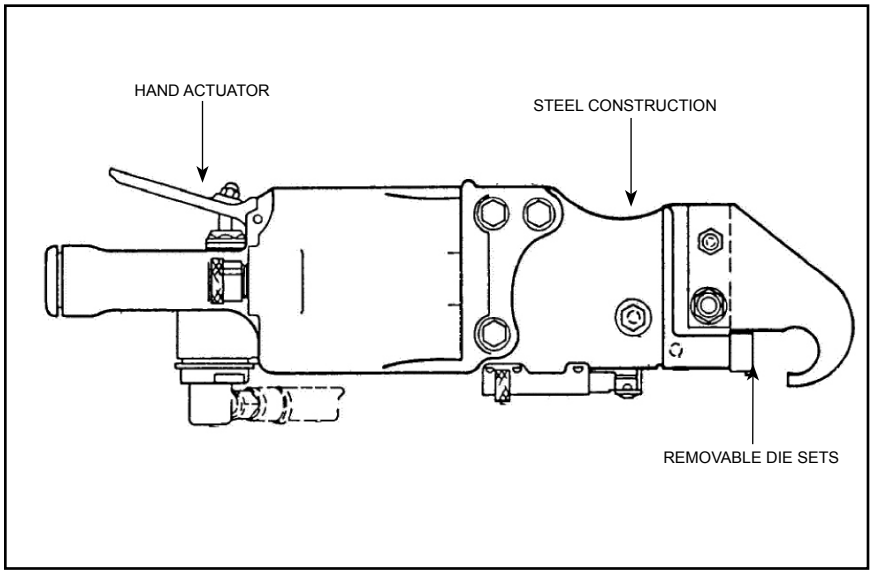

Nest/Indenter	Die Index
DV8L/Y29PL	38/631
DV8L/Y29PL	6/631
DV6LY29PL	39/632
D6CL/Y29PL	7
DV4L/Y29PL	40/633
D3CL/Y29PR	9
DV2CL/Y29PL	41/634
DV1L/Y29PR	42
DV25L/Y29PR	43
D26L/Y29PR	13
DV26L/Y29PR	44
DV8L/Y29PL	49

Micro-Adjustable "Click-Type" Torque Wrenches

The BURNDY® micro-adjustable torque wrenches, when used with BURNDY® mechanical connectors at the specified torque value, produces a consistent, quality connection.

The BURNDY® series of torque tools are professional grade and easy to operate. All wrenches incorporate an easy-to-read scale measured in inch pounds (in-lb) that can be easily matched to the recommended torque of each of our mechanical connector products. To set the desired torque, simply pull down the lock ring and turn the handle to the desired torque setting. Once set, the lock ring secures the torque setting. When the desired torque is reached, an impulse can be felt through the handle and an audible "click" can be heard.

All of the BURNDY® torque wrenches are calibrated for use in both directions. Each wrench is individually serialized with matching certificate of calibration traceable to N.I.S.T. and comes with a rugged plastic case for protection.

BURNDY® offers two torque wrench sizes each with a 3/8" drive and quick release button. The BTW30150 is designed to be used with all BURNDY® connectors requiring torque values from 30 to 150 in-lbs. The BTW150750 is for connections requiring 150 to 750 in-lbs. The BTW1575F12 is designed for applications requiring a 1/2" Drive and torque values from 15 to 75 ft-lbs. Torque wrenches carry a 1 year limited warranty.

Features and Benefits

- Ratcheting, calibrated, dual direction provides ease of use in the field
- Positive lock with spring-loaded pull-down lock ring assures the user that the torque setting is properly engaged and secure
- Scale settings on tool correspond to connector torque ratings (in-lb) to save time with fast, accurate and easy-to-set values
- Quick release button for interchanging sockets with ease
- Lightly knurled handle offers an ergonomic, non-slip grip
- Rugged metal handle withstands the rigors of professional use
- Micro-adjustable design minimizes the need for several wrenches
- Individually serialized and calibrated to offer user confidence that the torque wrench will provide the required torque
- Made in the USA

SPECIFICATIONS

Part Number:	**BTW30150**
Torque Range:	30 - 150 in-lbs
Length:	10.15"
Weight:	0.90 lbs
Drive:	3/8"

Part Number:	**BTW150750**
Torque Range:	150 - 750 in-lbs
Length:	16.00"
Weight:	2.50 lbs
Drive:	3/8"

Part Number:	**BTW1575F12**
Torque Range:	15 - 75 ft-lbs
Length:	16.00"
Weight:	2.50 lbs
Drive:	1/2"

Accuracy: ±4% clockwise ±6% CCW of indicated value CW, from 20% to 100% of full scale

Applicable Standards: ASME B107.14M-1994 and ISO 6789

Calibration: Calibration traceable to N.I.S.T.

FOR USE ON

SERVIT®, OKLIP™, VERSITAP™, SCRULUG™, LAY-IN QIKLUG™, VARITAP™, VARILUG™, Universal Terminals, UNITAP™, POLYTAP™, BARTAP™, Type BIPC, Terminal Blocks, U-BLOK™, SPEC-BLOK™, and VERSIPOLE™

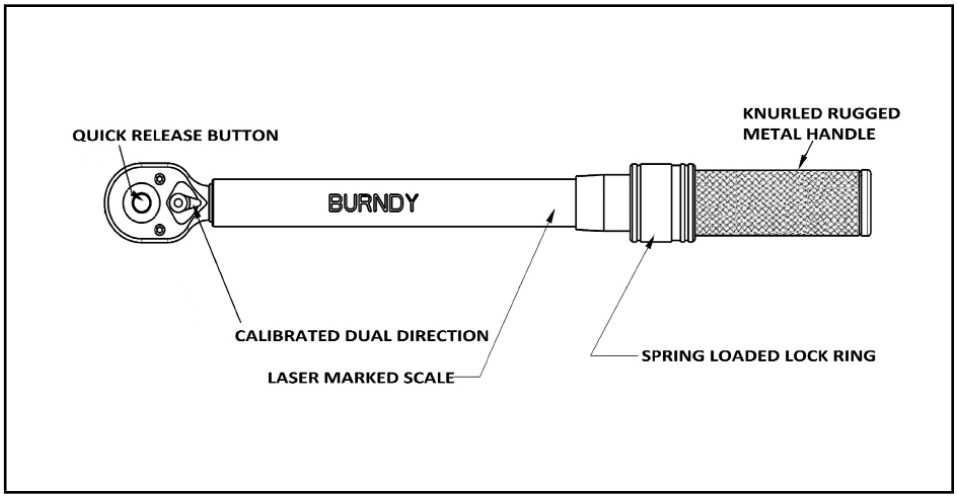

PATRIOT® PATHCC10-18V SERIES

BATTERY ACTUATED TOOL

Hydraulic Self-Contained Cutter

The BURNDY® PATHCC10-18V series C-head cutter is an innovative compact and mobile cutting tool that allows users to interchange different cutting blades customized for their application.

With a "C"-shaped style head and large opening, it's easy to scoop and cut without the need to open or close a latch. The tool head swivels 355° and comes with a retractable assist handle to help maneuver the cutting head into position. The PATHCC10-18V blade alignment technology ensures a clean cut and maximum blade life.

The PATHCC10-18V series tool accommodates four different interchangea-ble blade types: HCCACSR, HCCSOL, HCCCUAL, and HCCGUY. The PATHCC10-18V series tool comes in a variety of options to include a covered head version (PATHCC10C-18V), and the ability to order the tool with specific blades only. See the table for individual catalog numbers.

The PATHCC10-18V series cutters operate on 18-volt Ni-MH batteries. Each tool comes equipped with an impact resistant formed carrying case along with a tool retention lanyard, battery charger and two batteries. The carrying case also has pre-formed pockets to house all four blade types. The PATHCC10-18V series tools are provided with a 5-year limited warranty (excluding blades) and a lifetime power-train warranty on the INFINITY DRIVE® transmission. The batteries and charger are provided with a 1-year limited warranty.

Each BURNDY HCC blade kit is designed specifically for the material it is intended to cut. Each blade is made from high strength tool steel and then hardened to ensure a long life. Each blade kit comes complete with screws and wrench for installation.

Features and Benefits

- Specialized reinforced C-Head designed for easy and efficient cable cutting for both field and OEM applications
- Interchangeable precision cutting blades optimized for cutting Copper/Aluminum, ACSR, EHS Guy Strand and Ground Rod/ Rebar
- Battery and remote head platforms
- Available in covered head versions
- High strength steel cylinder for durability and long life
- Many part number options offered including the ability to order the tool with all blades or specific blades only
- 5-year limited warranty on tool (excluding blades)

SPECIFICATIONS

Tool Weight :	20.4 lbs
Length :	21.4 in
Width :	3.7 in
Height :	12.8 in
Operating Voltage :	18 V-DC
Recharge Time :	<45 minutes

FOR USE ON

Cu/Al Cable :	up to 1.5"
ACSR/ACSS :	up to 1590 kcmil
Ground Rod :	up to 5/8"
Rebar :	up to 1/2"
Soft Steel Bolts :	up to 5/8"
Std & EHS Guy :	up to 9/16"

ACCESSORIES

Replacement

Blades: HCCCUAL Cu/Al Blades
HCCACSR ACSR/ACSS Blades
HCCGUY GUY Blades
HCCSOL Rebar/Ground Rod Blades

Battery: Cat# **BAT18V** (2.6AH) Hi-capacity

Chargers:

120V-AC	Cat# **PATCHGR18V**
12/24V-DC	Cat# **BCT/PATDCCHGR**
240/250V-AC	Cat# **PATCHGR250V**

Tool Provided with Following Components

Catalog Number	Covered Head	ACSR Blade Set	CUAL Blade Set	SOL Blade Set	GUY Blade Set
PATHCC1018V		X	X	X	X
PATHCC10C18V	X	X	X	X	X
PATHCC10ACSR18V		X			
PATHCC10CUAL18V			X		
PATHCC10SOL18V				X	
PATHCC10GUY18V					X
PATHCC10CACSR18V	X	X			
PATHCC10CCUAL18V	X		X		
PATHCC10CSOL18V	X			X	
PATHCC10CGUY18V	X				
HCCACSR (blades only)		X			X
HCCCUAL (blades only)			X		
HCCGUY (blades only)				X	
HCCSOL (blades only)					X

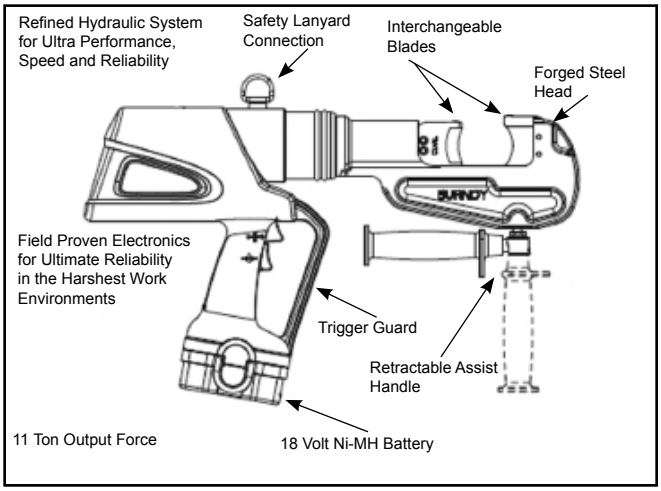

PATRIOT® PATCUT129-LI

18 Volt Lithium-Ion Battery Actuated Cutter

Hydraulic Self-Contained Cutting Tool

The BURNDY® PATRIOT® PATCUT129-LI Lithium-Ion tool incorporates the latest engineering technology with a refined hydraulic system for ultra performance, speed and reliability. The redesigned field proven electronics provide the ultimate reliability in the harshest work environments. All BURNDY® battery actuated hydraulic tools provide a consistent cut every time.

The PATCUT129-LI battery powered cutting tool is compact, fast, easy to use and incorporates the latest in battery tool technology. The ergonomic design allows one hand operation so that other is free to manipulate the conductor in the proper cutting position. The PATCUT129-LI incorporates a specialized latch-style cutting head that allows interference-free closure for mid-span cuts. The cutter head rotates 180 degrees to allow users to get into tight areas easier. The PATCUT129-LI is capable of cutting up to 1.29" diameter copper and aluminum cable, 1113 ACSR, 5/8" ground rods, 1/2" rebar, 5/8" diameter soft steel bolts up to 1/2" standard guy strand and up to 3/8" EHS guy strand.

The PATCUT129-LI is supplied with a durable high impact formed carrying case to hold the tool, battery charger, two 18 volt Lithium-Ion batteries and tool retention lanyard. The PATCUT129-LI is provided with a 5-year limited warranty (excluding blades) and 1-year on batteries and charger. All PATRIOT® tools feature the BURNDY® INFINITY DRIVE® transmission which has a lifetime warranty.

Features and Benefits

- Refined hydraulic system for ultra performance, speed and reliability
- Field proven electronics for ultimate reliability in the harshest environments
- Overmolded handle for comfort and improved grip; allows for one-handed operation for advance, retract and hold
- Specialized latch head design for interference free closure for mid-span cuts
- 18-volt Lithium-Ion batteries provide 2.5 times more charge/discharge cycles than traditional Ni-Cd batteries and provide 430% more lifetime work
- 30 minute charger controls current, voltage and temperature to maximize battery life
- Forced air cooling fan cools the battery by forcing cool air through the battery's built-in air vents
- 180° head rotation allows user to get into tight areas easier
- Ergonomically balanced tool design eases operation and lessens fatigue

SPECIFICATIONS

Tool Weight:	10.2 lbs (4.6 kg) With Battery
Length:	14.5" (36.8 cm)
Width:	3.5" (8.9 cm)
Height:	13.5" (34.3 cm)
Operating Voltage:	18 V-DC
Recharge Time:	30 minutes

FOR USE ON

Copper & Aluminum Cable :	Up to 1.29"
ACSR :	Up to 1113
Ground Rod :	Up to 5/8"
Rebar :	Up to 1/2"
Soft Steel Bolts :	Up to 5/8"
Standard Guy Strand :	Up to 1/2"
EHS Guy Strand:	Up to 3/8"

ACCESSORIES

- **Battery:** Cat# **BAT18VLI** (3.0 AH) Hi-capacity
- **Chargers:**
  - 120V-AC Cat# **PATCHGR-LI**
  - 12/24V-DC Cat# **PATCHGR-LIDC**
- **Replacement Blades:**
  - Cat# **PT10037388** (Moving Blade)
  - Cat# **PT10037384** (Fixed Blade)
- **Lanyard:** Cat# **PT208620**

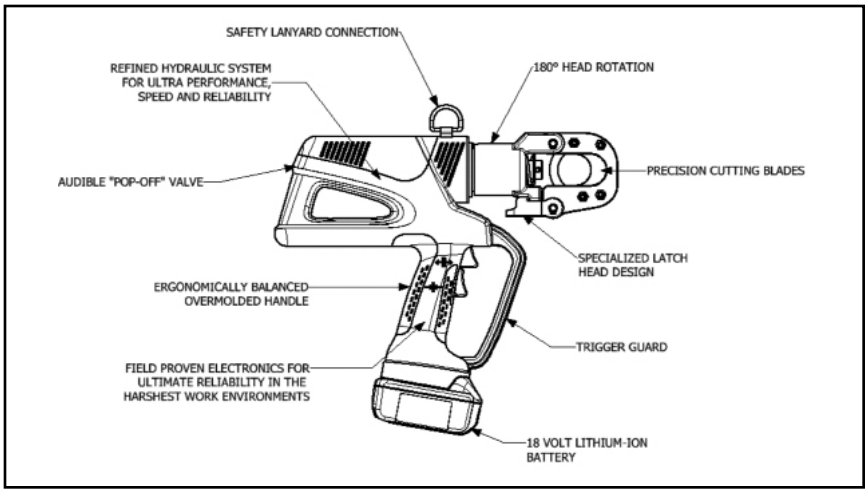

PATRIOT® PATCUT129ACSR-18V

BATTERY ACTUATED TOOL

Hydraulic Self-Contained Cutter

The BURNDY® PATCUT129ACSR-18V battery powered cutting tool is compact, fast, easy to use and incorporates the latest in battery tool technology. The ergonomic design allows one hand operation so that the other is free to manipulate the conductor in the proper cutting position. The PATCUT129ACSR-18V incorporates a specialized latch style cutting head that allows interference-free closure for mid-span cuts. The cutter head rotates 180 degrees to allow users to get into tight areas easier. The PATCUT129ACSR-18V is capable of cutting up to 1.29" diameter copper and aluminum cable, 1113 ACSR, 5/8" ground rod, 1/2" rebar, 5/8" diameter soft steel bolts, up to 1/2" standard guy strand, and up to 3/8" EHS guy strand.

The PATCUT129ACSR-18V operates on industry standard 18-volt Ni-MH batteries that eliminate voltage depression or "memory" issues. The PATCUT129ACSR-18V comes equipped with a high impact formed carrying case to hold the tool, a tool retention lanyard, a battery charger and two batteries. The PATCUT129ACSR-18V is provided with a 5-year limited warranty (excluding blades) and 1-year on batteries and charger.

Features and Benefits

- Battery powered cutting technology
- Advance design high-speed pump completes tough cuts faster
- Specialized latch head design
- Ergonomic design allows one hand operation
- 180 degree head rotation
- Mechanical ram release
- Operates on 18 volt Ni-MH batteries
- Durable high impact formed carrying case
- 5-year limited warranty on tool (excluding blades) and 1 year on batteries and charger

SPECIFICATIONS

Tool Weight:	11 lbs
Length:	14.5"
Height:	13.5"
Width:	3.5"
Operating Voltage:	18 V-DC
Recharge Time:	< 45 mins.

FOR USE ON

Copper Cable	: up to 1.29"
Aluminum Cable	: up to 1.29"
ACSR	: up to 1113 ACSR
Ground Rod	: up to 5/8"
Rebar	: up to 1/2"
Soft Steel Bolts	: up to 5/8"
Standard Guy Strand	: up to 1/2"
EHS Guy Strand	: up to 3/8"

ACCESSORIES

- **Lanyard:** Cat# **PT208620**
- **Battery:** Cat# **BAT18V** (2.6 AH) Hi-capacity
- **Charger:**
  - 120V-AC Cat# **PATCHGR18V**
  - 12/24V-DC Cat# **BCT/PATDCCHGR**
  - 240/250V-AC Cat# **PATCHGR250V**
- **Replacement Blades:**
  - Cat# **PT10037388** (Moving Blade)
  - Cat# **PT10037384** (Fixed Blade)

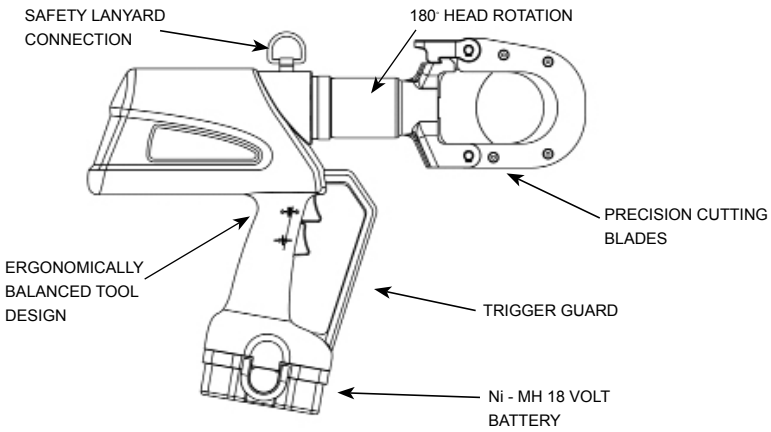

PATRIOT® PATCUT245-LI

18 Volt Lithium-Ion Battery Actuated Cutter

Hydraulic Self-Contained Cutting Tool

The BURNDY® PATRIOT® PATCUT245-LI Lithium-Ion tool incorporates the latest engineering technology with a refined hydraulic system for ultra performance, speed and reliability. The redesigned field proven electronics provide the ultimate reliability in the harshest work environments. All BURNDY® battery actuated hydraulic tools provide a consistent cut every time.

The PATCUT245-LI battery powered cutting tool is compact, fast, easy to use and incorporates the latest in battery tool technology. The ergonomic design allows one hand operation so that the other is free to manipulate the conductor in the proper cutting position. The PATCUT245-LI incorporates a specialized latch style cutting head that allows interference-free closure for mid-span cuts. The cutter head rotates 180 degrees to allow users to get into tight areas easier. The PATCUT245-LI is capable of cutting up to 2.45" diameter copper and aluminum cable.

The PATCUT245-LI is supplied with a durable high impact formed carrying case to hold the tool, battery charger, two 18 volt Lithium-Ion batteries and tool retention lanyard. The PATCUT245-LI is provided with a 5-year limited warranty (excluding blades) and 1-year on batteries and charger. All PATRIOT® tools feature the BURNDY® INFINITY DRIVE® transmission which has a lifetime warranty.

Features and Benefits

- Refined hydraulic system for ultra performance, speed and reliability
- Field proven electronics for ultimate reliability in the harshest environments
- Overmolded handle for comfort and improved grip; allows for one-handed operation for advance, retract and hold
- Specialized latch head design for interference free closure for mid-span cuts
- 18-volt Lithium-Ion batteries provide 2.5 times more charge/discharge cycles than traditional Ni-Cd batteries and provide 430% more lifetime work
- 30 minute charger controls current, voltage and temperature to maximize battery life
- Forced air cooling fan cools the battery by forcing cool air through the battery's built-in air vents
- 180° head rotation allows user to get into tight areas easier
- Ergonomically balanced tool design eases operation and lessens fatigue

SPECIFICATIONS

Tool Weight:	13.7 lbs (6.2 kg) With Battery
Length:	18.1" (45.9 cm)
Width:	3.5" (8.9 cm)
Height:	13.5" (34.3 cm)
Operating Voltage:	18 V-DC
Recharge Time:	30 minutes

FOR USE ON

Copper and Aluminum Cable: Up to 2.45" O.D

For Copper and Aluminum cable only. Do not cut steel, ground rod, rebar or guy wire.

ACCESSORIES

- **Battery:** Cat# **BAT18VLI** (3.0 AH) Hi-capacity
- **Chargers:**
  120V-AC Cat# **PATCHGR-LI**
  12/24V-DC Cat# **PATCHGR-LIDC**
- **Replacement Blades:**
  Cat# **PT10038657** (Moving Blade)
  Cat# **PT10040663** (Fixed Blade)
- **Lanyard:** Cat# **PT208620**

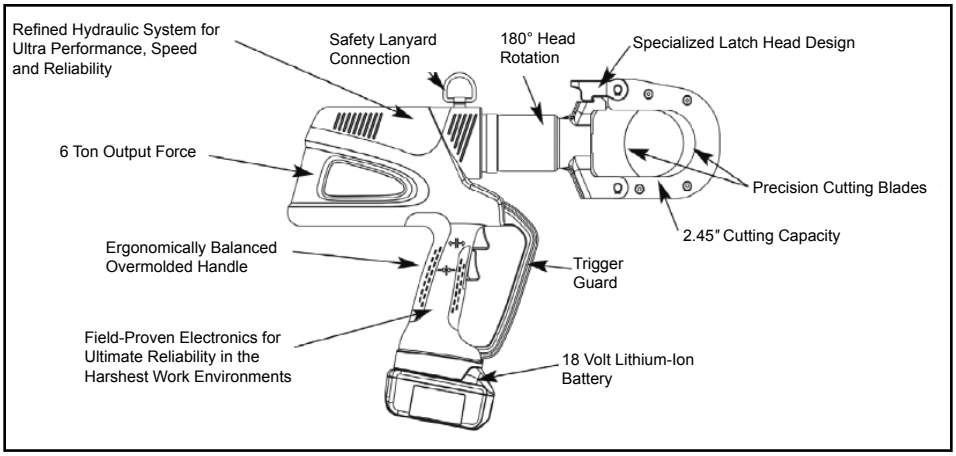

PATRIOT® PATCUT245CUAL-18V

BATTERY ACTUATED TOOL

Hydraulic Self-Contained Cutter

The BURNDY® PATCUT245CUAL-18V battery powered cutting tool is compact, fast, easy to use and incorporates the latest in battery tool technology. The ergonomic design allows one hand operation so that the other is free to manipulate the conductor in the proper cutting position. The PATCUT245CUAL-18V incorporates a specialized latch style cutting head that allows interference-free closure for mid-span cuts. The cutter head rotates 180 degrees to allow users to get into tight areas easier. The PATCUT245CUAL-18V is capable of cutting up to 2.45" diameter copper and aluminum cable.

The PATCUT245CUAL-18V operates on industry standard 18-volt Ni-MH batteries that eliminate voltage depression or "memory" issues. The PATCUT245CUAL-18V comes equipped with a high impact formed carrying case to hold the tool, a tool retention lanyard, a battery charger and two batteries. The PATCUT245CUAL-18V is provided with a 5-year limited warranty (excluding blades) and 1-year on batteries and charger.

Features and Benefits

- Battery powered cutting technology
- Advance design high-speed pump completes tough cuts faster
- Specialized latch head design
- Ergonomic design allows one hand operation
- 180 degree head rotation
- Mechanical ram release (no battery power consumption)
- Operates on 18 volt Ni-MH batteries
- Durable high impact formed carrying case

SPECIFICATIONS

Tool Weight:	14.5 lbs (5.4 kg) With Battery
Length:	18" (45.7 cm)
Width:	3.75" (9.5 cm)
Height:	14.75" (37.5 cm)
Operating Voltage:	18 V-DC
Recharge Time:	< 45 mins.

FOR USE ON

Copper and Aluminum Cable : Up to 2.45" O.D (62.2 mm)

For Copper and Aluminum cable only. Do not cut steel, ground rod, rebar, or guy wire.

ACCESSORIES

- **Carrying Case:** Cat# **PT10044980**
- **Lanyard:** Cat# **PT208620**
- **Battery:** Cat# **BAT18V** (2.6 AH) Hi-capacity
- **Charger:**
  120V-AC Cat# **PATCHGR18V**
  12/24V-DC Cat# **BCT/PATDCCHGR**
  240/250V-AC Cat# **PATCHGR250V**
- **Replacement Blades:**
  Cat# **PT10038657** (Moving Blade)
  Cat# **PT10040663** (Fixed Blade)

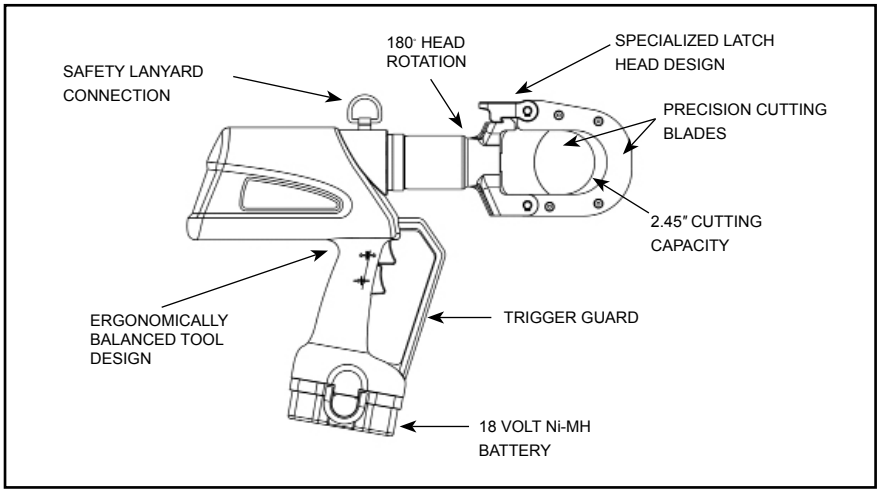

PATRIOT® PATCUT2156-LI

18 Volt Lithium-Ion Battery Actuated Cutter

Hydraulic Self-Contained Cutting Tool

The BURNDY® PATRIOT® PATCUT2156-LI cutting tool incorporates the latest engineering technology with a refined hydraulic system for ultra performance, speed and reliability.

The PATCUT2156-LI battery powered cutting tool is a compact, fast and versatile tool capable of cutting a variety of cable types and materials. The ergonomic design allows one hand operation so that the other is free to manipulate the conductor in the proper cutting position. All BURNDY® battery actuated hydraulic tools provide a consistent cut every time.

The PATCUT2156-LI is supplied with a durable high impact formed carrying case to hold the tool, battery charger, two 18V Lithium-Ion batteries and tool retention lanyard.

The PATCUT2156-LI is provided with a 5-year limited warranty and a 1-year warranty on batteries and charger. All PATRIOT® tools feature the BURNDY® INFINITY DRIVE® transmission which has a lifetime warranty. Blades excluded.

Features and Benefits

- Durable hardened steel blades for optimum cutting and increased life
- Battery powered cutting technology for easy tool operation and portability
- Advance design high-speed pump completes tough cuts faster and provides longer life, efficiency, and reliability
- Specialized latch head design for interference free closure for mid-span cuts
- Ergonomic design allows one hand operation allowing user one hand free to manipulate material to be cut
- 180 degree head rotation provides versatile head positioning allows user to get into tight areas easier
- Mechanical ram release with reliability and no battery power consumption

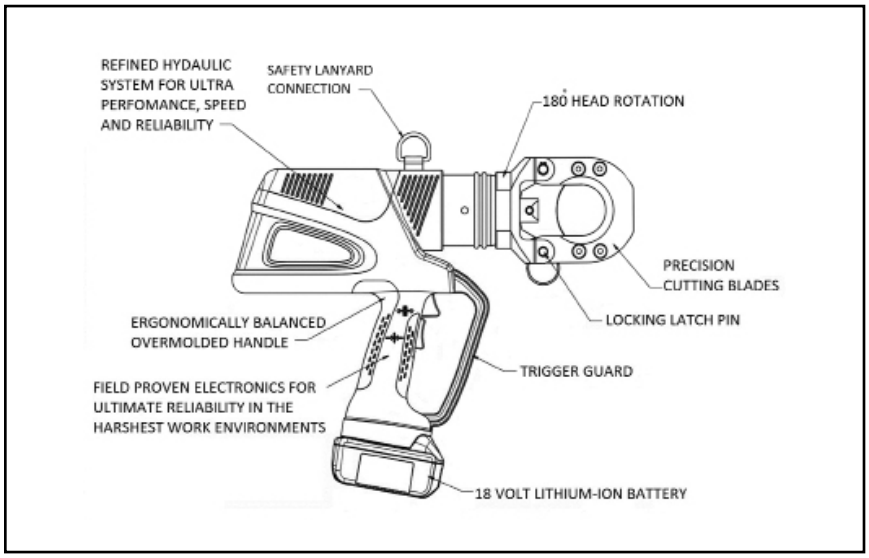

SPECIFICATIONS

Tool Weight:	15.5 lbs
Length:	16.47"
Width:	,./ 3.27"
Height:	13.46"
Operating Voltage:	18V-DC
Recharge Time:	30 mins

FOR USE ON

• CU and AL Cable:	Up to 2.0"
• ACSR:	Up to 2156
• Ground Rod:	Up to 3/4"
• Rebar:	Up to 5/8"
• Soft Steel Bolts:	Up to 3/4"
• Standard Guy Strand:	Up to 9/16"
• EHS Guy Strand:	Up to 9/16"

PART NUMBERS

PATCUT2156-LI	18V with 110V Charger
PATCUT2156-LIDC	18V with DC Charger
PATCUT2156-LILCB	Less Batteries & Charger

ACCESSORIES

Battery:	Cat# **BAT18VLI** (3.0 AH) Hi-capacity
Chargers:	
120V-AC	Cat# **PATCHGR-LI**
12/24V-DC	Cat# **BCT/PATCHGR-LIDC**
Replacement Blades:	Cat# **CUT200BLMVBL** (Movable Blade) Cat# **CUT200BLSTA** (Stationary Blade)
Lanyard:	Cat# **PT208620**

PATRIOT® PATCUT2156-18V

18 Volt Ni-MH Battery Actuated Cutter

Hydraulic Self-Contained Cutting Tool

The BURNDY® PATRIOT® PATCUT2156-18V cutting tool incorporates the latest engineering technology with a refined hydraulic system for ultra performance, speed and reliability.

The PATCUT2156-18V battery powered cutting tool is a compact, fast and versatile tool capable of cutting a variety of cable types and materials. The ergonomic design allows one hand operation so that the other is free to manipulate the conductor in the proper cutting position. All BURNDY® battery actuated hydraulic tools provide a consistent cut every time.

The PATCUT2156-18V is supplied with a durable high impact formed carrying case to hold the tool, battery charger, two 18V Ni-MH batteries and tool retention lanyard.

The PATCUT2156-18V is provided with a 5-year limited warranty and a 1-year warranty on batteries and charger. All PATRIOT® tools feature the BURNDY® INFINITY DRIVE® transmission which has a lifetime warranty. Blades excluded.

Features and Benefits

- Durable hardened steel blades for optimum cutting and increased life
- Battery powered cutting technology for easy tool operation and portability
- Advance design high-speed pump completes tough cuts faster and provides longer life, efficiency, and reliability
- Specialized latch head design for interference free closure for mid-span cuts
- Ergonomic design allows one hand operation allowing user one hand free to manipulate material to be cut
- 180 degree head rotation provides versatile head positioning allows user to get into tight areas easier
- Mechanical ram release with reliability and no battery power consumption

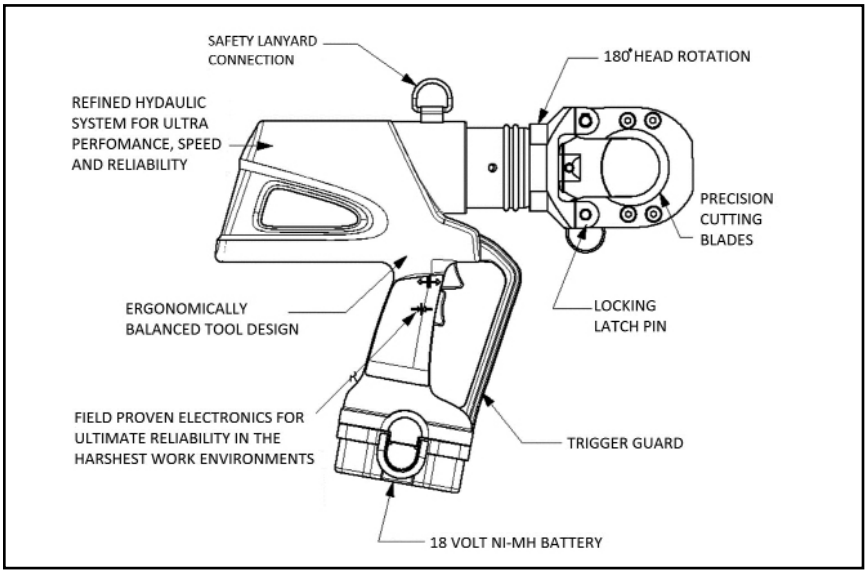

SPECIFICATIONS

Tool Weight:	16.3 lbs
Length:	16.52"
Width:	3.27"
Height:	13.29"
Operating Voltage:	18V-DC
Recharge Time:	< 45 mins

FOR USE ON

• **CU and AL Cable:**	Up to 2.0"
• **ACSR:**	Up to 2156
• **Ground Rod:**	Up to 3/4"
• **Rebar:**	Up to 5/8"
• **Soft Steel Bolts:**	Up to 3/4"
• **Standard Guy Strand:**	Up to 9/16"
• **EHS Guy Strand:**	Up to 9/16"

PART NUMBERS

PATCUT2156-18V	18V with 110V Charger
PATCUT2156-18VDC	18V with DC Charger
PATCUT2156-18V250V	18V with 250V Charger

ACCESSORIES

Battery:	Cat# **BAT18V** (2.6 AH) Hi-capacity
Chargers:	
120V-AC	Cat# **PATCHGR18V**
12/24V-DC	Cat# **BCT/PATDCCHGR**
240/250V-AC	Cat# **PATCHGR250V**
Replacement Blades:	Cat# **CUT200BLMVBL** (Movable Blade) Cat# **CUT200BLSTA** (Stationary Blade)
Lanyard:	Cat# **PT208620**

PATRIOT® IN-LINE®

PATMDCUT Series
Li-Ion or Ni-MH powered styles

Battery Actuated Tool Hydraulic Self-Contained Cutter

The BURNDY® IN-LINE® tools are battery actuated and can be operated with one hand allowing for advance, retract and hold functions for easier operation. One hand operation allows the operator one free hand to position the connector and conductor while crimping. The PATRIOT® PATMDCUT series of tools incorporate a hydraulic pump generating considerable cutting force. This design provides a consistent, reliable cut every time.

The PATRIOT® tool features interchange-able MD6 series jaw assemblies, capable of both cutting and crimping (using "W" and "X" style dies). When ordering choose the tool that best suits your cutting and crimping needs. The IN-LINE® tools feature 350° rotatable jaw assemblies for operation in virtually any position.

The PATRIOT® IN-LINE® cutter tools are supplied with a durable high strength carry bag, battery charger and two batteries.

Catalog Number	Description
PATMDCUTLI	Tool with ACSR Blades, 120V AC Li-Ion Charger
PATMDCUTLIDC	Tool with ACSR Blades,12V DC Li-Ion Charger
PATMDCUT14V*	Tool with ACSR Blades, 120V AC Ni-MH Charger
PATMDCUT14VDC*	Tool with ACSR Blades, 12V DC Ni-MH Charger
PATMDCUT14V250V*	Tool with ACSR Blades, 250V AC Ni-MH Charger
PATMDCUTACSRKIT	Repalceable ACSR Blades ONLY

* 14.4 Ni-MH battery powered also available; not featured on this sheet; subtle differences between the platforms exist; Contact Customer Service for information.

Features and Benefits

- Plenty of output force for reliable cuts on an array of conductor sizes
- Interchangeable scissor action jaws crimp or cut with the same tool
- Ram holds position when trigger is released to allow the operator to check alignment prior to cut
- Large hand grip area allows easier operation with gloves
- Ergonomically balanced tool design helps lessen operator fatigue
- High capacity 3.0 AH batteries provide more cuts/crimps per charge
- Actuated blade guide automatically closes for easy positioning on cable and allows large diameter cable to be cut
- One set of blades to cut all specified materials
- 5-year limited warranty on tool; 1-year on batteries and charger

PATRIOT® IN-LINE® Cut/Crimp Kits:
All with Cutter Jaws, 2 Batteries and Charger

PATMD6LICUTKIT1	BG & D3 Grooves, hard case
PATMD68LICUTKIT1	O & D3 Grooves, hard case
PATMD66LICUTKIT1	D3 Groove (snub), hard case
PATMD6LIWCJ	BG & D3 Grooves, soft case
PATMD66LIWCJ	O & D3 Grooves, soft case
PATMD68LIWCJ	D3 Groove (snub), soft case

Interchangeable Jaw Assemblies:

PATJAWSMD6	BG and D3 Grooves
PATJAWSMD6-8	O and D3 Grooves
PATJAWSMD6-6	D3 Groove only (snub-nose)
PATJAWSMD6K	KEARNEY™ Groove (snub)
PATJAWSCUT	Cutter Jaw Set

Jaw Covers: **PATMD6JC, PATMD66JC, PATMD6KJC**

Tool Weight:	8 lbs
Length:	22 in
Height:	5 in
Width:	2.7 in

Max. Cutting Capacity:

Copper
500 kcmil (0.93" [24 mm] Max. Insulation Dia.)

Aluminum
636 kcmil Orchid
(0.93" [24 mm] Max. Insulation Dia.)

ACSR
556.5 kcmil Dove 26/7
(0.93" [24 mm] Max. Dia.)

Guy Strand (EHS)
3/8" Dia. [10 mm]

Copper Weld / AlumaWeld
3/8" Dia. [10 mm]
(approx. #4 AWG depending on stranding)

Rebar
3/8" Dia. [10 mm]

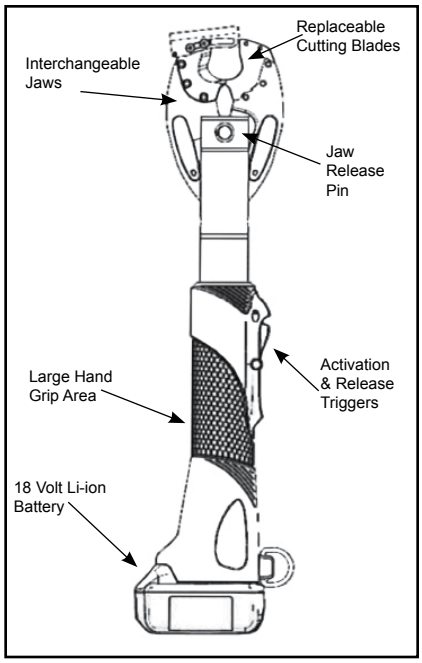

Catalog Number	Description
BAT18VLI	Battery, 18V Li-Ion
PATCHGRLI	Charger, 110 VAC for LI
PATCHGLIDC	Charger, 12 VDC for LI
PT10074020	Strap, Wrist, IN-LINE® Tool
PATMDCUTSOMI	User Manual (SOMI)

PATRIOT® IN-LINE® POLE CUTTERS

Li-ION or Ni-MH Battery Actuated Cutter

Hydraulic Self-Contained Cutting Tool

The BURNDY® IN-LINE® pole cutters are battery actuated hydraulic self contained cable cutters for cutting operations at heights. The PATRIOT® PATMDCUT series of tools incorporates a hydraulic pump generating considerable cutting force providing a consistent and reliable cut every time.

This PATRIOT® tool features interchangeable MD6 series jaw assemblies, capable of both cutting and crimping (using "W" and "X" style dies). The IN-LINE® tools features, 350˚ rotatable jaw assemblies for operation in virtually any position.

The PATRIOT® IN-LINE® cutter tools are supplied with battery charger and two batteries (crimp jaws are sold separately). All PATRIOT® IN-LINE® pole cutters are provided with a 5-year limited warranty; 1 year on batteries and charger.

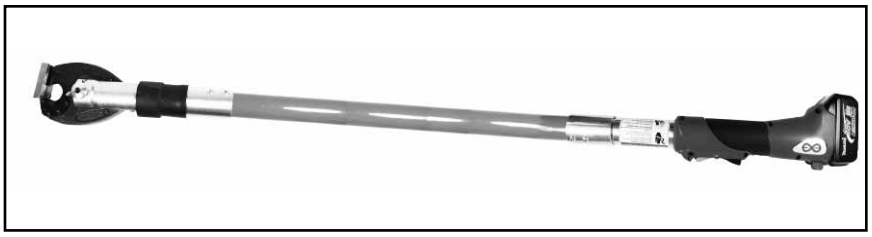

Features and Benefits

- Plenty of output force for reliable cuts on an array of conductor sizes
- Interchangeable scissor action jaws allow to crimp or cut with the same tool
- The ram holds position when the trigger is released, allowing the operator to check alignment prior to the cut
- Large hand grip area allows easier operation with gloves
- Ergonomically balanced tool design helps to lessen operator fatigue
- Available in varying lengths (40 in, 60 in and 72 in)
- High capacity 3.0 AH (Li-ION) or 2.6 AH (Ni-MH) batteries provide more cuts/crimps per charge
- Actuated blade guide, automatically closes for easy positioning on cable and allows large diameter cable to be cut
- One set of blades to cut all specified materials
- 5-year limited warranty on tool and 1 year on batteries and charger

Product Variations	
Catalog Number	**Length (inches) (A)**
PATMDCUT48LLI	48"
PATMDCUT60LLI	60"
PATMDCUT72LLI	72"
PATMDCUT48LNMH	48"
PATMDCUT60LNMH	60"
PATMDCUT72LNMH	72"

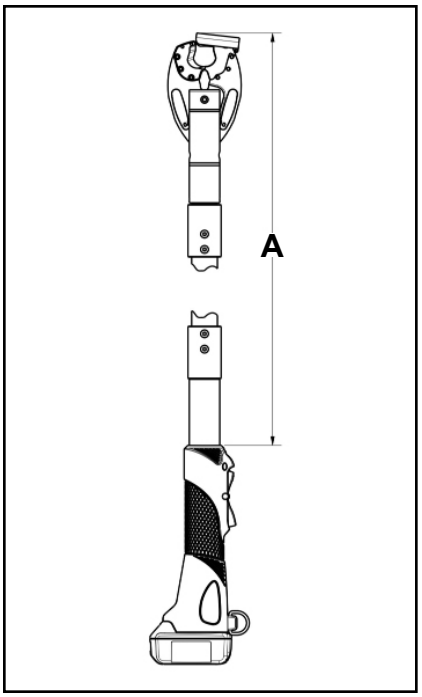

Cutting Capacity		
Material	**Wire Range**	**Life (cuts)**
CU	500 kcmil (.93" [24 mm] Max. Insulation Dia.)	500
AL	636 kcmil Orchid (.93" [24 mm] Max. Insulation Dia.)	500
ACSR	556.5 kcmil Dove 26/7 (.93" [24 mm] Max Dia.)	200
GUY St (EHS)	3/8" Dia. [10 mm]	150
CopperWeld	3/8" Dia. [10 mm] (approx. #4 AWG depending on stranding)	150
AlumaWeld	3/8" Dia. [10 mm] (approx. #4 AWG depending on stranding)	150
Rebar	3/8" Dia. [10 mm]	300

Accessories	
Blades	
Catalog Number	**Description**
PATMDCUTACSRKIT	Blades, Cutter, ACSR Replacable
Jaw	
Catalog Number	**Description**
PATJAWSCUT	Cutter Jaw Set, includes ACSR blades
PATJAWSMD6	Crimp Jaw, "BG" and "D3" Grooves
PATJAWSMD68	Crimp Jaw, "O" and "D3" Grooves
PATJAWSMD66	Crimp Jaw, SNUB, "D3" Grooves
PATJAWSMD6K	Crimp Jaw, SNUB, KEARNEY Groove
Power Source	
Catalog Number	**Description**
BAT18VLI	Battery, 18V LI-ION
BAT14V	Battery, 14V Ni-MH
PATCHGRLI	Charger, 120 VAC (for LI-ION Battery)
PATCHGLIDC	Charger, 12 VDC (for LI-ION Battery)
PATCHGR18V	Charger, 111 VAC (for Ni-MH Battery)
BCT/PATDCCHGR	Charger, 12 VDC (for Ni-MH Battery)
Other	
Catalog Number	**Description**
PATMD6JC	Cover Kit, MD6, MD68 Jaw
PATMD66JC	Cover Kit, MD66 Jaw
PATMD6KJC	Cover Kit, MD6K Jaw
PT10074020	Strap, Wrist (In-Line)
Documentation	
Catalog Number	**Description**
PATMDCUTSOMI	User Manual (SOMI)

BCC1000CUAL

BATTERY ACTUATED CABLE CUTTER

Battery Actuated Cable Cutter

The BURNDY® BCC1000CUAL is a 12 V-DC battery actuated cable cutter capable of cutting up to 750 kcmil hard drawn copper cable, and up to 1000 kcmil soft drawn copper and up to 2" O.D. aluminum cable. DO NOT CUT STEEL or ACSR. The BCC1000CUAL comes with battery powered cutting tool, sealed nickel cadmium 12V battery, 120V AC charger, carrying case, and wrist loop which provides added security when making cuts overhead.

The BURNDY® BCC1000CUAL is designed to cut copper and aluminum cables in a limited amount of space. The BCC1000CUAL makes fast reliable cuts without stress to the user. Just squeeze the trigger and it will cut through your toughest copper and aluminum cables. The BCC1000CUAL has a three-way switch (forward, reverse, and neutral) which allows the user to make partial cuts, back off cables, or make adjustments during cutting.

The battery charge time is approximately 1 hour for a fast charge (80%), 4 to 6 hours for a quick charge, and 14 to 16 hours for a standard charge (100%). The 12V battery can be recharged approximately 1,000 times.

The BCC1000CUAL (excluding cutting blades) is warranted to be free of defects in material and workmanship for a period of 90 days, except in the case of abuse or modification.

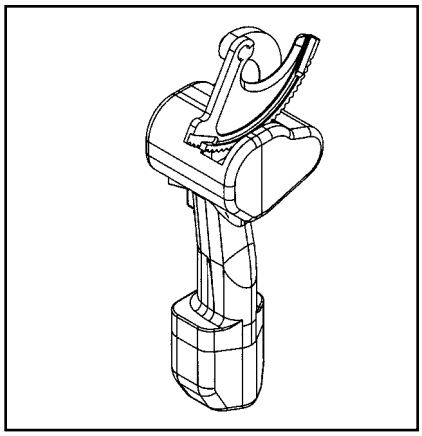

Features and Benefits

- Hook head design
- Three-way switch
- Hardened steel blades
- Ergonomic design
- Wrist loop
- Simplifies conductor cutting and allows working in tight spaces
- Allows backing off cable, partial cuts, and adjusting during cutting
- Helps ensure consistent cuts and longer blade life
- Prevents hand/wrist injury
- Withstands rugged use, resists oil and solvents
- Added security when cutting cables overhead

ACCESSORIES

Catalog Number	Item Description
BCCBAT12V	Battery
BCCCHGR	Charger
BCCCASE	Carrying Case
RP50RP03	Moving Blade
RP50RP02	Fixed Blade

SPECIFICATIONS

Cutting Tool

Specifications	Description
Drive Unit:	12 V-DC Motor
Dimensions:	4" L X 4.5" W X 14.5" H
Weight:	6 lbs
Cutting Capacity:	1000 kcmil soft drawn copper, 750 kcmil hard drawn copper and up to 2" O.D. aluminum

Battery

Specifications	Description
Battery Type:	Sealed nickel cadmium
Voltage:	12 V-DC
Rated Capacity:	1.2 A/hr.
Charge Time:	Fast, approx. 1 hour Quick, 4-6 hours Standard, 14-16 hours
Dimensions:	2.75" L X 2.7" W X 4.75"
Weight:	1.4 lb

Battery Charger

Specifications	Description
Input Voltage:	120 V-AC
Input Frequency:	60 Hz
Input Current:	110/120V
Dimensions:	5.7" L X 3" W X 2.8" H
Weight:	2.2 lbs

FOR USE ON

Maximum conductors accommodated:
750 kcmil hard drawn copper
1000 kcmil soft drawn copper
1000 kcmil aluminum

YCUT129ACSR

HYDRAULIC HAND OPERATED CUTTER

The BURNDY® YCUT129ACSR incorporates a specialized latch style cutting head that allows interference-free closure for mid-span cuts. The cutter head rotates 180 degrees to allow users to get into tight areas easier. The YCUT129ACSR weighs only 11.4 pounds, yet delivers 7 tons of cutting force. The YCUT129ACSR with its hardened steel blades is capable of cutting up to 1.29″ diameter bare or insulated copper and aluminum cable, 1113 ACSR, 5/8″ ground rod, 1/2″ rebar and 5/8″ diameter soft steel bolts 1/2″ standard guy strand and up to 3/8″ EHS guy strand.

The YCUT129ACSR comes equipped with a high impact formed carrying case to hold the tool and accessories. The BURNDY® YCUT129ACSR is provided with a 5-year limited warranty (excluding blades).

Features and Benefits

- Patented rapid advance pump for faster cuts with less hand strokes
- Specialized latch head design; Interference free closure on mid-span cuts
- Handle trigger drain for convenient blade retraction
- Hardened steel blades with the ability to cut ACSR, ground rods, rebar and guy wire
- Comfort grip handles to help ease fatigue with continuous use
- 180-degree head rotation allows for versatile head positioning to get into tight areas easier
- Durable high impact formed carrying case to provide for tool protection and to store accessories
- 5-year limited warranty on tool (excluding blades)

SPECIFICATIONS

Force Developed:	7 U.S. short tons
Tool Weight:	11.4 lbs (5.1 kg)
Length:	22.4" (56.9 cm)
Height:	6.6" (16.8 cm)
Width:	2.5" (6.4 cm)

FOR USE ON

Copper Cable:	up to 1.29"
Aluminum Cable:	up to 1.29"
ACSR:	up to 1113 ACSR
Ground Rod:	up to 5/8"
Rebar:	up to 1/2"
Soft Steel Bolts:	up to 5/8"
Standard Guy Strand:	up to 1/2"
EHS Guy Strand:	up to 3/8"

ACCESSORIES

Cat. No.	Description
PT10024162	Carrying Case
Replacement Blades:	
PT10037388	Moving Blade
PT10037384	Fixed Blade

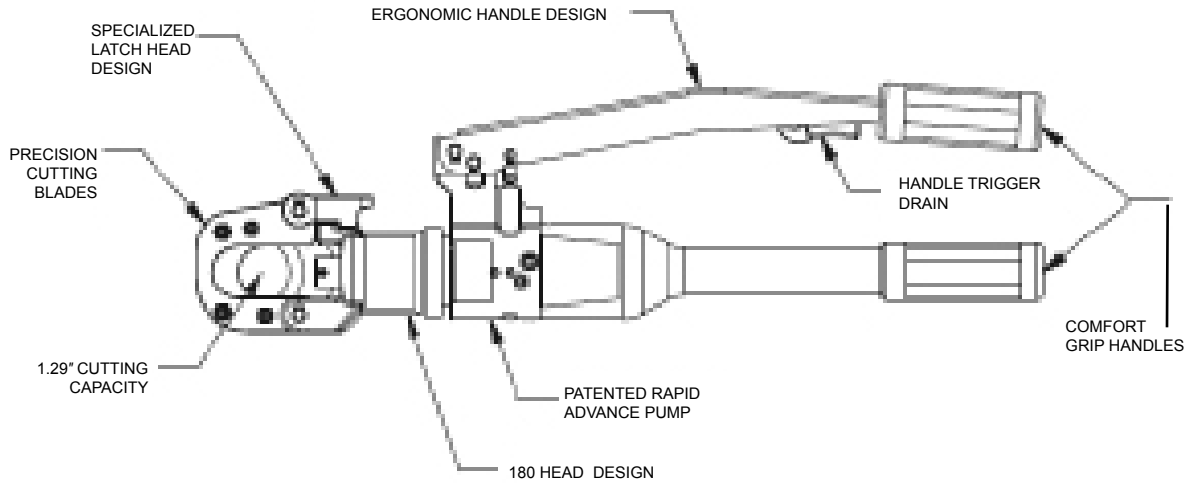

RHCC10
RHCC10C

10,000 PSI Remote Cable Cutter

Remote Power Operated
Hydraulic Cable Cutter

The BURNDY® RHCC10 series C-head cutter is an innovative compact cutting tool that allows users to interchange different cutting blades customized for their application.

With a "C"-shaped style head and large opening, it's easy to scoop and cut without the need to open or close a latch. The RHCC10 blade alignment technology ensures a clean cut and maximum blade life. The RHCC10 series tool accommodates four (4) different interchangeable blade types to cut Copper/Aluminum, ACSR/ACSS, EHS Guy and Rebar. The RHCC10 series tool comes in a variety of options including the ability to order the tool with specific blades only as well as a covered head version (RHCC10C). The RHCC10 and RHCC10C are provided wth a 5-year limited warranty (excluding blades).

Features and Benefits

- Specialized reinforced C-Head designed for easy and efficient cable cutting for both field and OEM applications
- Interchangeable precision cutting blades optimized for cutting Copper/Aluminum, ACSR/ACSS, EHS Guy Strand and Ground Rod/Rebar
- Durable canvas carrying bag provides tool protection and stores all accessories
- High strength steel cylinder for durability and long life
- 5-year limited warranty on tool (excluding blades)

SPECIFICATIONS

Operating Pressure: 10,000 PSI (700 bar)
Tool Weight: 13.2 lbs (6 kg)
Length: 17.58" (447 mm)
Width: 4.70" (119 mm)

FOR USE ON

Cu/Al Cable : up to 1.5"
ACSR/ACSS : up to 1590 kcmil
Ground Rod : up to 5/8"
Rebar : up to 1/2"
Soft Steel Bolts : up to 5/8"
Std & EHS Guy : up to 9/16"

ACCESSORIES

Canvas Bag : **MINBAG**

Replacement Blades : **HCCCUAL**, **HCCACSR**, **HCCGUY**, **HCCSOL**

Hot Stick Adapter : **PT10128**

Components Each Tool is Provided With					
Catalog Number	**Covered Tool**	**ACSR Blade Set**	**CUAL Blade Set**	**SOL Blade Set**	**GUY Blade Set**
RHCC10		X	X	X	X
RHCC10C	X	X	X	X	X
RHCC10ACSR		X			
RHCC10CUAL			X		
RHCC10SOL				X	
RHCC10GUY					X
RHCC10CACSR	X	X			
RHCC10CCUAL	X		X		
RHCC10CSOL	X			X	
RHCC10CGUY	X				X

Blade Table		
Blade Catalog Number	**Cutting Material**	**Max. O.D.**
HCCACSR	ACSR/ACSS	1590 kcmil
HCCCUAL	CU & AL	1.5" (38 mm)
HCCSOL	Ground Rod	5/8" (16 mm)
	Rebar	1/2" (13 mm)
	Soft Steel Bolts	5/8" (16 mm)
HCCGUY	Std. Guy Wire	9/16" (14 mm)
	EHS Guy Wire	9/16" (14 mm)

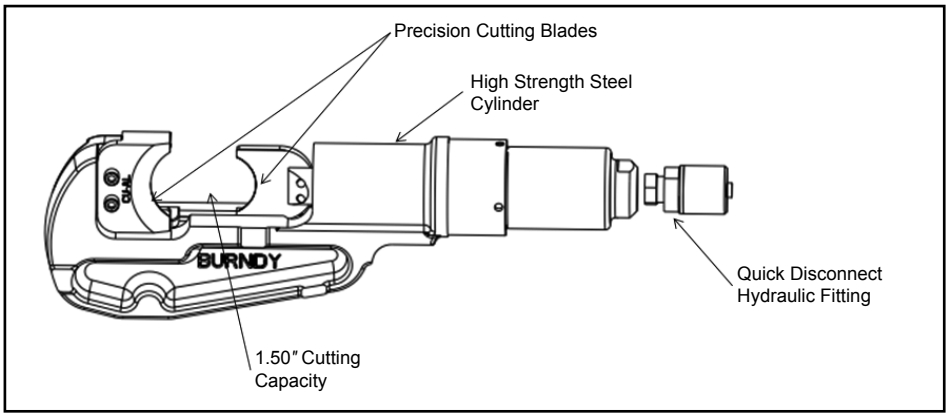

RHCC129ACSR

10,000 PSI Remote Cable Cutter

Remote Power Operated
Hydraulic Cable Cutter

The BURNDY® RHCC129ACSR remote hydraulic cable cutter incorporates a specialized latch style cutting head that allows interference-free closure for mid-span cuts. The RHCC129ACSR with its precision cutting blades is capable of cutting up to 1.29" diameter bare or insulated copper and aluminum cable, 1113 ACSR, 5/8" ground rod, 1/2" rebar, 5/8" diameter soft steel bolts, 1/2" standard guy strand, and up to 3/8" EHS guy strand.

The RHCC129ACSR is provided with a 5-year limited warranty (excluding blades).

Features and Benefits

- Specialized latch head design - interference free closure for mid-span cuts
- Precision cutting blades for clean cuts on Cu/Al, ACSR, ground rods, rebar, guy strand, and soft steel bolts
- High strength steel cylinder for durability and long life
- Lightweight ergonomic design allows one hand operation; user has one hand free to manipulate material to be cut
- Durable canvas carrying bag provides tool protection and stores all accessories
- 5-year limited warranty on tool (excluding blades)

SPECIFICATIONS

Operating Pressure:	10,000 PSI (700 bar)
Tool Weight:	5.85 lbs (2.65 kg)
Length:	11.25" (286 mm)
Width:	3.7" (94 mm)

FOR USE ON

Copper Cable:	up to 1.29"
Aluminum Cable:	up to 1.29"
ACSR:	up to 1113 ACSR
Ground Rod:	up to 5/8"
Rebar:	up to 1/2"
Soft Steel Bolts:	up to 5/8"
Standard Guy Strand:	
EHS Guy Strand:	up to 1/2"
	up to 3/8"

ACCESSORIES

Canvas Bag:	Cat# **PT10043890**
Replacement Blades:	Cat# **PT10037388** (Moving Blade)
	Cat# **PT10037384** (Fixed Blade)
Hot Stick Adapter:	Cat# **RHCCHSA**

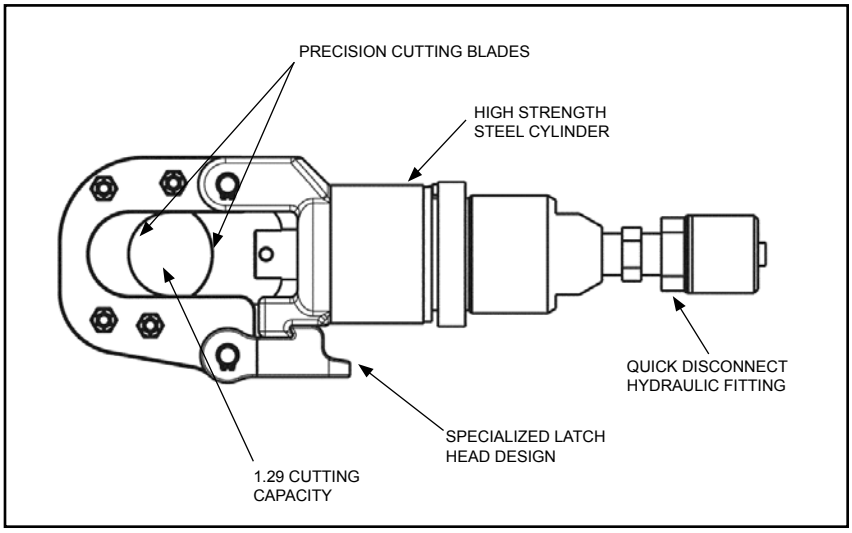

RHCC245CUAL

10,000 PSI Remote Cable Cutter

Remote Power Operated
Hydraulic Cable Cutter

The BURNDY® RHCC245CUAL remote hydraulic cable cutter incorporates a specialized latch style cutting head that allows interference-free closure for mid-span cuts. The RHCC245CUAL with its precision cutting blades is capable of cutting up to 2.45" diameter copper and aluminum cable.

The RHCC245CUAL is provided with a 5-year limited warranty (excluding blades).

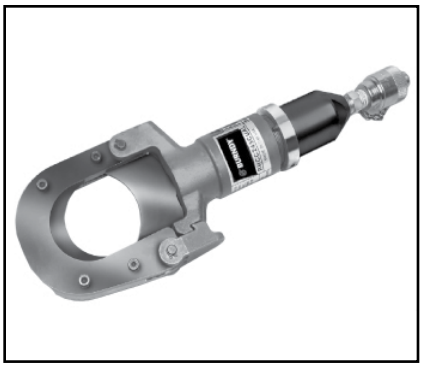

Features and Benefits

- Specialized latch head design; interference free closure for midspan cuts
- Precision cutting blades for clean cuts on copper and aluminum cable
- High strength steel body for durability and long life
- Lightweight ergonomic design allows one hand operation allows user to have one hand free to manipulate material to be cut
- Durable canvas carrying bag provides tool protection and stores all accessories
- 5-year limited warranty on tool (excluding blades)

SPECIFICATIONS

Operating Pressure: 10,000 PSI (700 bar)
Tool Weight: 8.3 lbs (3.8 kg)
Length: 14.8" (376 mm)
Width: 4.75" (121 mm)

FOR USE ON

Copper & Aluminum: 2.45" O.D. (62 mm)

ACCESSORIES

Canvas Bag: Cat# **PT10054094**

Replacement Blades: Cat# **PT10038657** (Moving Blade)

Cat# **PT10040663** (Fixed Blade)

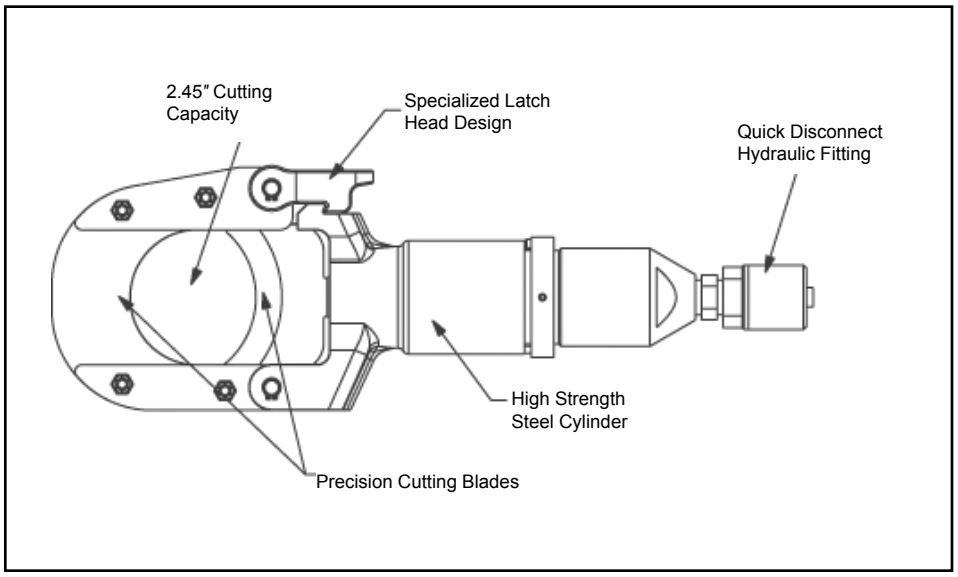

MCC600, MCC1000

MANUAL CABLE CUTTERS

The MCC series cable cutters are precision cable cutters incorporating high leverage shear type design capable of cutting up to 1000 kcmil copper and aluminum cables.

Rugged steel blades and fiberglass construction provide cutting ease, long life and minimum cable distortion.

The MCC series cable cutters are warranted to be free from defects in material (excluding blades) and workmanship for one year.

Features and Benefits

- High quality design and construction
- Rugged high quality steel blades
- Fiberglass handles with soft grips
- Easy cutting with minimal cable distortion
- Excellent cutting edge performance
- Provides comfortable tool operation and long life

Catalog Number	Overall Length	Max. Capacity		Max. Insulation Diameter	Weight
		Copper	Aluminum		
MCC600	21" [533 mm]	600 kcmil	600 kcmil	1.31" [33 mm]	3.5 lbs. [1.5 kg]
MCC1000	32" [813 mm]	1000 kcmil	1000 kcmil	1.90" [48 mm]	9.0 lbs. [4.0 kg]

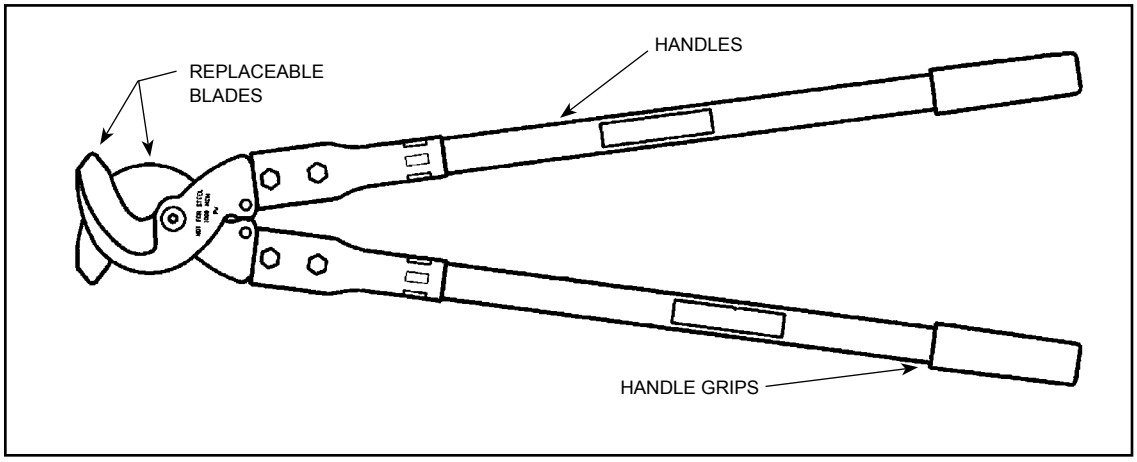

Replacement Blades

Catalog Number	Description
MCC600BLADESET	Replacement Blades for MCC600
MCC1000BLADESET	Replacement Blades for MCC1000

TYPES RCC336, RCC556, RCC600E, RCC750HD, RCC954ACSR1K, RCC1000

Ratchet Cable Cutters

The RCC series cable cutters are precision high quality tools designed to cut up to 954 ACSR and 1000 kcmil copper and alumin-um. The tools are equipped with rugged steel blades and a precision bi-directional ratchet mechanism for positive blade control, including where applicable, a fast action thumb slide collar for rapid blade advance and rugged fiberglass or non-slip grip handles. RCC600E and RCC750HD have cushion grip covered steel handles.

The RCC series cable cutters are warranted to be free from defects in material (excluding blades) and workmanship for one year.

For replacement blades, consult factory for details.

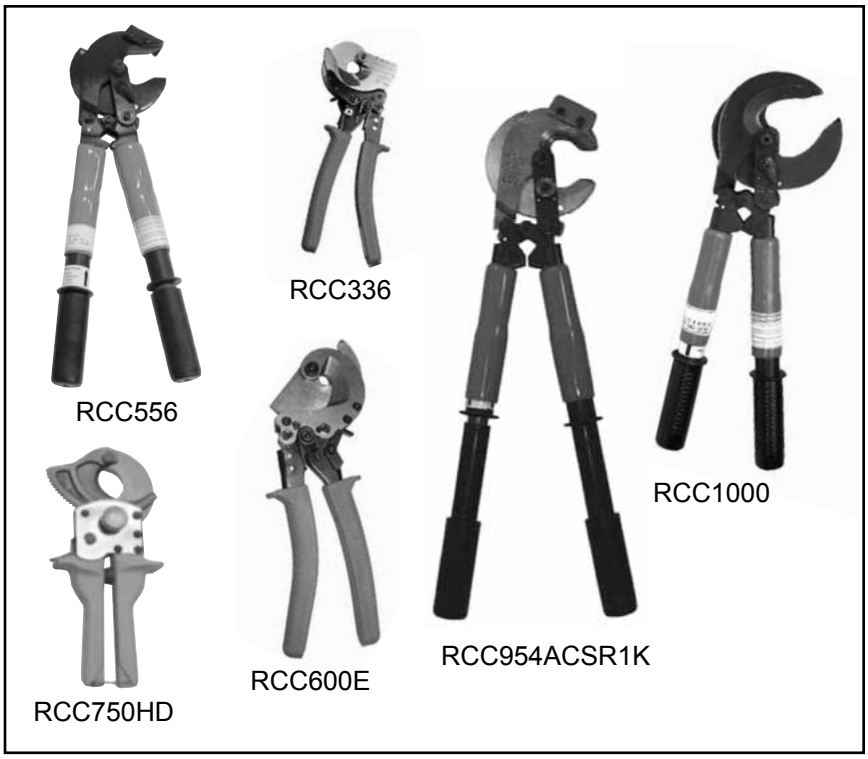

Features and Benefits

- Patented high strength steel blades
- Quick release, bi-directional ratchet mechanism
- Rapid blade advance
- Easy cutting with minimal cable distortion
- Excellent cutting edge performance
- Provides comfortable tool operation and long life

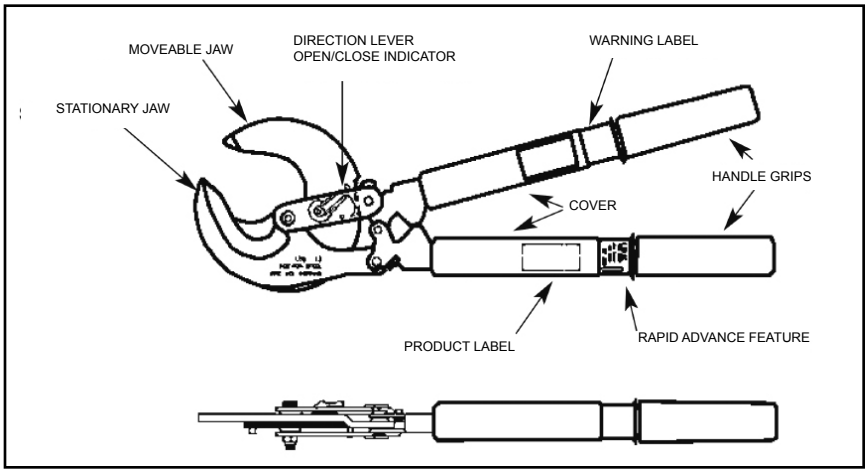

Catalog Number	Overall Length in / mm	Max. Capacity			Max. Insulation Diameter in / mm	Weight lbs. / kg
		Copper	Aluminum	ACSR		
RCC336	10.50″ / 267 mm	350 kcmil [177 mm]	500 kcmil [253 mm]	336 kcmil [18.31mm]	0.74″ / 18.8 mm	1.20 lbs. / 0.50 kg
RCC556	20.00″ / 508 mm	500 kcmil [26.70 mm]	500 kcmil [26.70 mm]	556 kcmil [23.55mm]	1.25″ / 31.75 mm	4.50 lbs. / 2.00 kg
RCC600E	10.50″ / 267 mm	600 kcmil [26.70 mm]	600 kcmil [26.70 mm]	—	1.05″ / 26.60 mm	1.32 lbs. / 0.40 kg
RCC750HD	10.50″ / 267 mm	750 kcmil [29.36 mm]	750 kcmil [29.36 mm]	—	1.62″ / 41.15 mm	2.43 lbs. / 1.10 kg
RCC954ACSR1K	22.75″ / 578 mm	1000 kcmil [33.27 mm]	1000 kcmil [33.27 mm]	954 kcmil [30.38 mm]	1.38″ / 35.05 mm	6.50 lbs. / 2.95 kg
RCC1000	20.00″ / 508 mm	1000 kcmil [33.27 mm]	1000 kcmil [33.27 mm]	—	2.38″ / 60.32 mm	4.50 lbs. / 2.00 kg

RWRC516, RWRC916

Ratchet Wire Rope Cutter

The BURNDY® RWRC516 and RWRC916 wire rope cutters are premium precision tools designed to cut flexible, multi-stranded steel and stainless steel wire rope.

Tightly guided high strength steel blades prevent wire entrapment between the blades. The blade geometry captures the wire to produce a clean cut while preserving the circular shape of the wire bundle.

The tool employs a ratchet mechanism for precise control and significantly reduced handle force as compared to scissor or compound action designs. The handle grips are made of non-slip material and are designed for operator comfort.

RWRC516 RWRC916

SPECIFICATIONS

RWRC516

Weight: 120 lbs.
Length: 10.0"
Cutting Capacity
Mild Steel: 5/16" dia
Stainless Steel: 1/4" dia

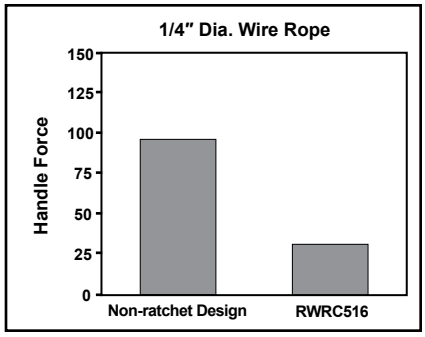

RWRC916

Weight: 4.35 lbs.
Length: 20.0"
Cutting Capacity
Mild Steel: 9/16" dia
Stainless Steel: 1/2" dia

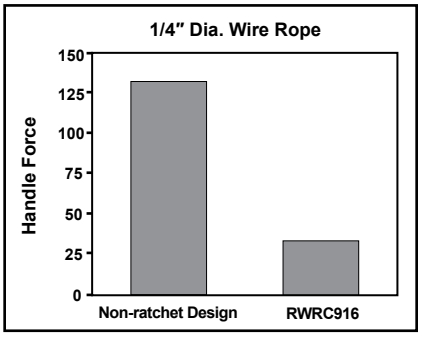

	RWRC516	RWRC916
Ratcheting Feature	Yes	Yes
Blade Material	Hardened Steel	Hardened Steel
Emergency Release	Disengagement from Ratchet	Reverse Operation with Forward/Reverse Switch
Rapid Blade Advance	Yes	Yes
Quickblade Reset	Push Blade Through Cycle	Reverse Operation

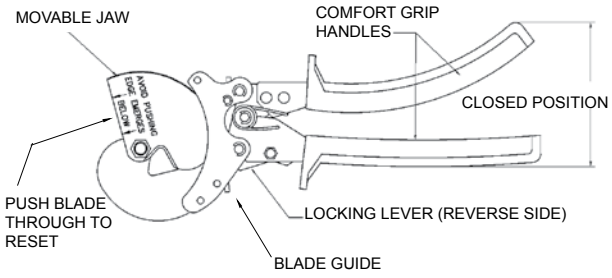

RWRC516

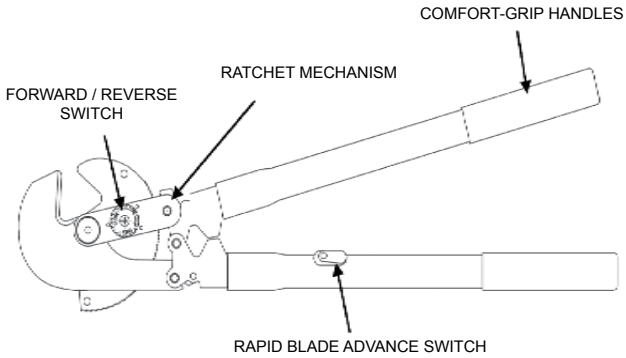

RWRC916

HP10, HP8 AND HP6

HP Series Manual Hydraulic Hand Pumps

Hydraulic Output Pressures of 10,000 PSI, 8,800 PSI, and 6,000 PSI

Hand pumps are designed to match the output pressure requirements of HYPRESS™ heads and cutters. Each pump is equipped with a built-in, factory set pressure release valve with audible click to signal completion of crimp cycle.

Features and Benefits

- Durable, long life expectancy
- Easy to transport and move tool around job site with built in handle
- Maximum mechanical advantage provided with long handle
- Solid tool base provided with sturdy broad leg stabilizers
- Save time with quick disconnect hydraulic fitting
- High quality crimps provided with built-in, factory set pressure release valve and audible click to signal completion of crimp
- 5-year limited warranty

SPECIFICATIONS

Reservoir volume:	1-1/8 qts.
Length:	24-3/4"
Width:	5"
Weight:	18 lbs
Closed height:	6-3/4"
Height: (with handle open)	20"

FOR USE ON

HP10	10,000	Y34BH, Y35BH, Y35BH-4, Y750BHXT, Y750CBHXT, Y39BH, Y45, Y46C, Y46, Y60BHU, Y60 LW, RHCC Series Cutters
HP8	8,800	Y48BH
HP6	6,000	Y29BH, Y35-L

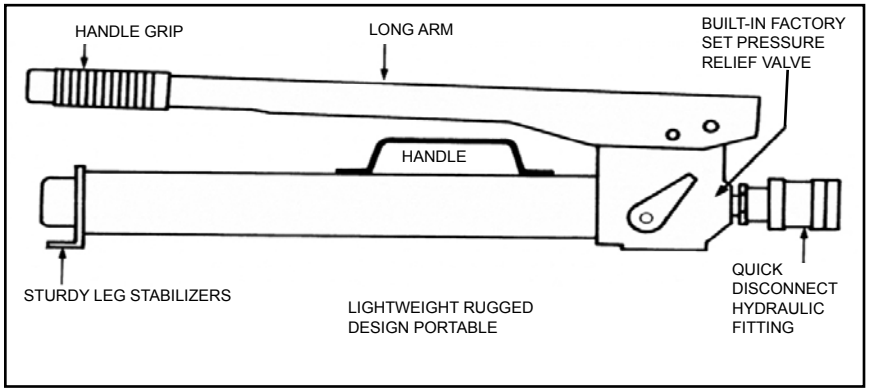

ACCESSORIES

Cat# **BP10PADKIT**	Extended leg pad stablilizers (w/hardware)

FP10, FP8 AND FP6

FP Series Manual Hydraulic Foot Pumps

Hydraulic Output Pressures of 10,000 PSI, 8,800 PSI, and 6,000 PSI

Foot pumps are designed to match the output pressure requirements for use with all HYPRESS™ heads and cutters. Each pump is equipped with a built-in, factory set pressure release valve with audible click to signal completion of a crimp cycle.

Features and Benefits

- Easy to lift and carry.
- Durable. Long life expectancy.
- Easy to transport and move tool around job site with built in handle.
- Easy operation provided with spring assisted return arm.
- Maximum mechanical advantage provided with long arm extending beyond pump body.
- Quality, heavy duty foot pad provided with diamond plate steel.
- Solid tool base provided with sturdy broad leg stabilizers.
- Time saving quick disconnect hydraulic fitting.
- High quality crimps provided with factory set pressure release valve with audible click to signal completion of crimp.
- 5-year limited warranty.
- Diamond plate steel foot pad.
- Long arm, Spring loaded arm.
- Built-in factory set pressure relief valve.
- Quick disconnect hydraulic fitting.
- Lightweight rugged design - portable.
- Sturdy leg stabilizers.

SPECIFICATIONS

Reservoir volume:	**1-1/8 qts.**
Length:	**24-3/4"**
Width:	**5"**
Weight:	**19 lbs**
Closed height:	**6-1/2"**
Height:	**17"**
(with handle open)	

FOR USE ON

FP10	10,000	Y34BH, Y35BH, Y35BH-4, Y750BHXT, Y39BH,Y45, Y46C, Y46, Y60BHU, Y60LW, Y750CBHXT, RHCC Series Cutters
FP8	8,800	Y48BH
FP6	6,000	Y35-L, Y29BH

ACCESSORIES

Cat# **BP10PADKIT**	Extended leg pad stablilizers (w/hardware)

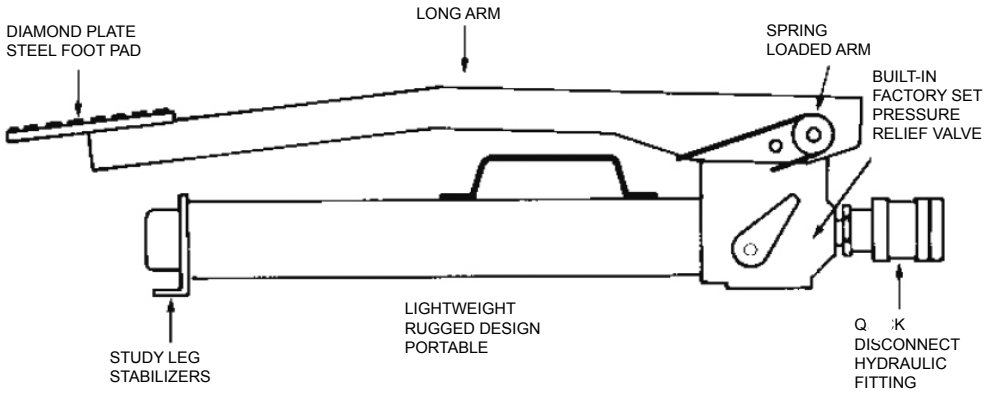

Y10AC9

Electric Hydraulic Pump

Hydraulic Output Pressure of 10,000 PSI

The Y10AC9 electric hydraulic pump is for use with all HYPRESS™ heads and cutters requiring 10,000 PSI operating pressure.The Y10AC9 is equipped with a built-in, factory set pressure relief valve. An audible "pop" and recycling of the pump as well as relaxing of the hose signal completion of the crimping/cutting cycle. Pump is supplied with a durable hand-held electric pendant switch.

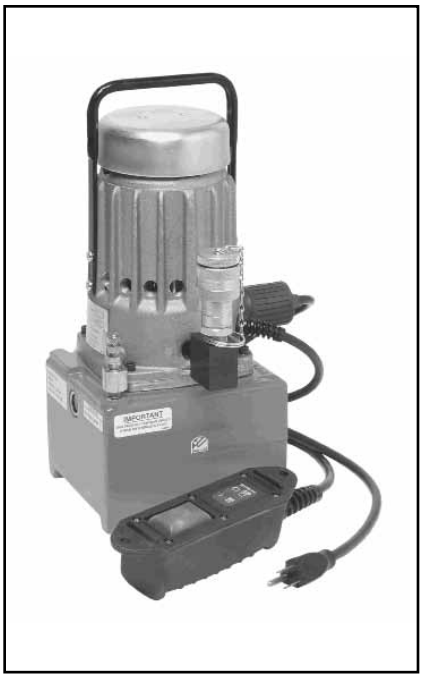

Features and Benefits

- Lightweight, small size; easy to lift, carry and transport tool around job site with lightweight body and handle
- Factory set relief valve; high quality crimps are achieved with built-in, factory set pressure relief valve and audible recycling of pump to signal completion of crimp cycle
- 100,000 (+) life cycles; long durable life expectancy with light weight cast aluminum reservoir body
- Convenient 115V AC electric powered motor
- Saves time with quick disconnect hydraulic fitting
- Sealed electric pendant switch; easy operation with durable remote pendant switch with 10-foot cord
- 5-year limited warranty

SPECIFICATIONS

Motor:	115V-AC 50/60 Hz 5/8 HP, 10,000 rpm
Maximum current draw:	11 amp
Reservoir Volume:	1.61 quarts
Height:	14.38"
Base:	6.5" X 8.25"
Weight:	28 lbs (with oil)

FOR USE ON

Y34BH, Y35BH, Y35BH4, Y39BH, Y45, Y46, Y46C, Y750BHXT, Y750CBHXT, Y644MBH, Y4PC834MBH, Y81KFTMBH, Y60BHU, RHCC129ACSR, RHCC245CUAL

ACCESSORIES

YAC-CASE	Steel carrying case with handle and locking latch.
YAC-FC	Foot Control.

The BURNDY® **Y10AC9OEM** is an additional electric hydraulic pump offering that comes equipped with a foot switch and "jog-and-hold" feature. Keep both hands on the connection with the Y10AC9OEM pump kit. For further details please contact customer service.

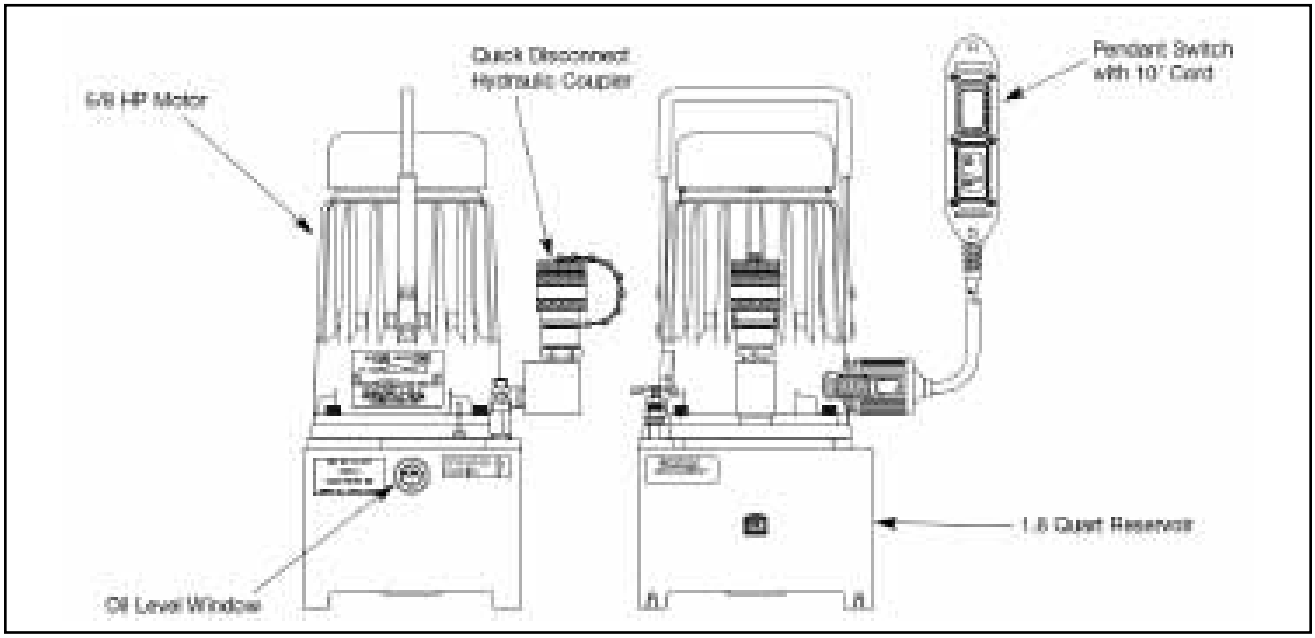

EPP10 AND EPP6

EPP Series
Electric/Hydraulic Pump

Hydraulic Output Pressures
of 10,000 PSI and 6,000 PSI

The lightweight and durable EPP10 electric/hydraulic pump is for use with all BURNDY® HYPRESS™ remote heads and cutters requiring 10,000 PSI operating pressure. Both the EPP10 and the EPP6 are equipped with a built-in, factory set pressure relief valve. An audible "pop" and recycling of the pump and relaxing of the hose, signals completion of the crimping/cutting cycle. Both pumps are supplied with a durable hand-held electric pendant switch, for remote operation of the unit, and have a manual selection switch mounted for operation of the unit at the pump. The operator can select which method is best suited for the application.

An optional carry/shipping case can be ordered. All EPP Series pumps have been life cycle tested to over 100,000 cycles without failure, and are warranted to be free of defects in materials and workmanship for 5-years when properly maintained and operated.

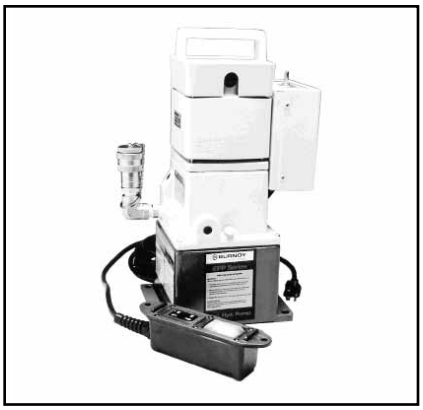

Features and Benefits

- Lightweight
- Small size
- Factory set relief valve
- 100,000 (+) life cycles
- Sealed electric pendant switch
- High quality crimps are achieved with built in, factory set pressure release valve and audible recycling of pump to signal completion of crimp cycle
- Easy to lift, carry and transport tool around job site with lightweight body and handle
- Convenient 115 V-AC electric powered motor
- Durable remote pendent switch
- Easy operation controlled with pendent switch, or manual switch
- Saves time with quick disconnect hydraulic fitting
- Long durable life expectancy with lightweight cast aluminum reservoir body
- 5-year limited warranty.

SPECIFICATIONS

Motor:	115V-AC/60 Hz 1/2 HP @ 3450 RPM
Maximum Current Draw:	12.5 amperes
Reservoir Volume:	2 quarts
Height:	16"
Base:	6" X 8"
Weight:	30 lbs

FOR USE ON

EPP10	10,000	Y34BH, Y35BH, Y35BH-4, Y39BH, Y45, Y46, Y46C, Y60BHU, Y60LW, Y644MBH, Y750BHXT, Y750CBHXT, RHCC Series Cutters
EPP6	6,000	Y35L, Y29BH

ACCESSORIES

Cat. No. **EPPCASE-1**
Steel carrying case with handle and locking latch.

EPAC10, EPAC8 AND EPAC6

EPAC Series Electric/Hydraulic Pump, Air Control

Hydraulic Output Pressures of 10,000 PSI, 8,800 PSI, and 6,000 PSI

The EPAC10, EPAC8, and EPAC6 electrically driven hydraulic pumps feature exclusive automatic or manual "Jog and Hold" operation control provided by a unique air control switch, which provides the safest operation method of any pump available. All EPAC's are remotely controlled by an improved air control switch which electrically isolates the operator from the unit, and can be operated by either hand or foot activation. A three (3) position toggle switch mounted on the control box allows the operator to select either full automatic, off, or manual operation.

The automatic mode advances the remote tool into a "hold" position without crimping the connector so the operator can inspect the orientation before completing the crimp. Once the crimp is completed, the pump automatically turns the pump off, allowing the retraction of the remote tool and resets itself for the next operation.

The manual position allows the operator to jog the tool forward without the tool ram retracting. To retract the tool prior to completing the crimp, turn the control switch to "off," the pump will stop and the tool will retract. In the manual mode the pump advances only while the control is being depressed. To complete a crimp, squeeze and hold the air control switch until the pump reaches the pre-set pressure and shuts off.

The EPAC Series of electrically driven hydraulic pumps incorporate a heavy-duty roll cage design that is both rugged and portable. All EPAC Series pumps have been life cycle tested to over 100,000 cycles without failure, and are warranted to be free of defects in material and workmanship for 5 years when properly maintained and operated.

Features and Benefits

- Roll cage
- 3 position switch and control box
- Factory set output pressure
- Quick disconnect hydraulic coupler
- Oil level window
- 8 quart reservoir
- Permits final inspection of connector before completing crimp cycle
- Extra supply hydraulic fluid 8-quart reservoir
- Full automatic or manual "Jog and Hold" cycles
- Operator safety with power loss "smart
- circuit" freezes unit in event of power disruption
- Method of operation desired is permitted with 3-position selection switch
- Safety is provided against hazardous shock with airbulb actuator and air line
- Saves time with quick disconnect hydraulic fitting
- Windows allows easy inspection of proper oil level
- High quality crimps are achieved with built-in factory set pressure release valve
- 5-year limited warranty

SPECIFICATIONS

Motor:	1/2 HP 115/230V-AC, 60 Cycle
Maximum Current draw:	10 amperes
Reservoir Volume:	8 quarts max. 2 quarts min.
Height:	17-1/2"
Base:	11-3/4"X 18-1/2"
Dry Weight:	68 lbs (82 lbs. with max. fluid)

(1/2 Hp @ 3450 RPM)

FOR USE ON

EPAC10	10,000	Y34BH, Y35BH
EPAC-8	8,800	Y48BH
EPAC-6	6,000	Y35L, Y29BH

EP10, EP10-2, EP8, AND EP6

EP SERIES ELECTRIC/ HYDRAULIC PUMPS

Hydraulic Output Pressures of 10,000 PSI, 8,800 PSI, and 6,000 PSI

Electrically driven hydraulic pumps are supplied with a durable, hand-held electric pendent switch that remotely controls the pump and matches the output requirements of all HYPRESS™ remote heads and cutters. Each pump is equipped with a built-in, factory set, pressure relief valve. An audible "pop" and recycling of the pump and relaxing of the hose, signals completion of the crimping cutting cycle.

All EP series pumps are supplied with 115/230 - 220/230 voltage, 60/50 hertz, 1/2 horse power motor and can be wired for use with any electric power source worldwide. A three prong, grounded plug is wired standard on the units. All EP Series pumps have been life cycle tested to over 100,000 cycles without failure, and are warranted to be free of defects in materials and workmanship for 5-years when properly maintained and operated.

SPECIFICATIONS

Motor:	1/2 HP 115/230 V-AC, 60 Cycle
(EP-2 versions):**	1/2 HP 220/230 V-AC, 50 Cycle
Current draw:	10 amperes
Reservoir Volume:	8 quarts max., 2 quarts min.
Height:	17-1/2"
Base:	11-3/4" X 18-1/2"
Dry Weight:	68 lbs (86 lbs. with max. fluid)

(1/2 Hp @ 3450 RPM)

- Easy inspection of proper oil level is provided by see through window
- High quality crimps are achieved with built-in, factory set, pressure release valve and audible recycling of pump which signals completion of crimp
- 5-year limited warranty

FOR USE ON

EP10 AND EP10-2	10,000	Y34BH, Y35BH, Y35BH-4, Y39BH, Y45, Y46, Y46-C, Y60BHU, Y60LW, Y750BHXT, Y750CBHXT, RHCC Series Cutters
EP8	8,800	Y48BH
EP6	6,000	Y35L, Y29BH

Features and Benefits

- 1/2 HP motor
- Dual voltage/hertz
- Roll cage
- Quick disconnect hydraulic coupler
- Oil level window
- 8 quart reservoir
- Factory set output pressure
- Provides fast sure pump action plus a long life expectancy
- It's portable. Roll cage allows easy moving on the job site
- Durable 1/2 HP dual voltage motor
- Extra supply of hydraulic fluid with 8 quart reservoir
- Saves time with quick-disconnect hydraulic fitting
- Easy operator control is provided with remote pendent switch

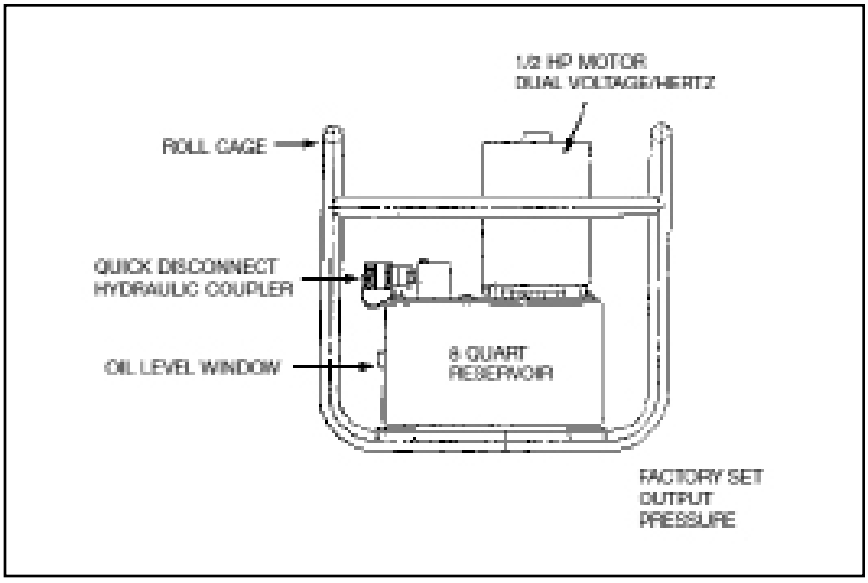

EP10-1HP AND EP10-1HP-2

EP-1HP SERIES ELECTRIC/ HYDRAULIC PUMPS

Hydraulic Output Pressures of 10,000 PSI

Heavy duty electrically driven hydraulic pumps are supplied with a durable, handheld electric pendent switch that remotely controls the pump and matches the output requirements of all HYPRESS™ remote heads and cutters. Each pump is equipped with a built-in, factory set, pressure relief valve. An audible "pop" and recycling of the pump and relaxing of the hose, signals completion of the crimping/cutting cycle.

All EP-1HP series pumps are supplied with 115/230 - 220/230 voltage, 60/50 hertz, 1 horsepower motors and can be wired for use with any electric power source worldwide. A three prong, grounded plug is wired standard on the units. All EP-1HP Series pumps have been life cycle tested to over 100,000 cycles without failure, and are warranted to be free of defects in materials and workmanship for 5-years when properly maintained and operated.

Features and Benefits

- Heavy duty design
- Roll cage
- Quick disconnect hydraulic coupler
- Oil level window
- 8 quart reservoir
- Factory set output pressure
- 1 HP motor dual voltage/hertz
- Provides fast sure pump action plus a long life expectancy
- Its portable roll cage allows easy moving on the job site
- Strong durable motor provided with (1) H.P. dual voltage design
- Extra supply of hydraulic fluid with 8 quart reservoir
- Saves time with quick-disconnect hydraulic fitting
- Easy operator control is provided with remote pendant switch
- Easy inspection of proper oil level is provided by see through window
- High quality crimps are achieved with built-in, factory set, pressure release valve and audible recycling of pump which signals completion of crimp
- 5-year limited warranty

SPECIFICATIONS

Motor:	1 HP 115/230V-AC, 60 cycle
(EP-2 versions):**	1/2 HP 220/230V-AC, 50 cycle
Maximum Current draw:	10 amps
Reservoir Volume:	8 quarts max., 2 quarts min.
Height:	17-1/2"
Base:	11-3/4" X 18-1/2"
Dry Weight:	68 lbs (86 lbs with max. fluid)

(1/2 Hp @ 3450 RPM)

FOR USE ON

EP10-1HP AND EP10-1HP-2	10,000	Y34BH, Y35BH, Y35BH-4, Y39BH, Y45, Y46, Y46-C, Y60BHU, Y750BHXT, Y750CBHXT, RHCC Series Cutters

GP10

GP Series Gasoline Engine Driven Hydraulic Pump

Hydraulic Output Pressures of 10,000 PSI

The GP series gasoline engine driven hydraulic pump is a heavy-duty design that is rugged and portable. Supplied with a 4 H.P. engine, the pump operates all BURNDY® remote compression heads and cable cutters.

All GP style pumps have a built-in, factory pre-set, automatic pressure release overload valve with a definite pulsing and recycling to signal the completion of a crimp. The manual control valve allows user to "Jog and Hold" due to the unique check valve design that keeps pressure in the output line until retracted.

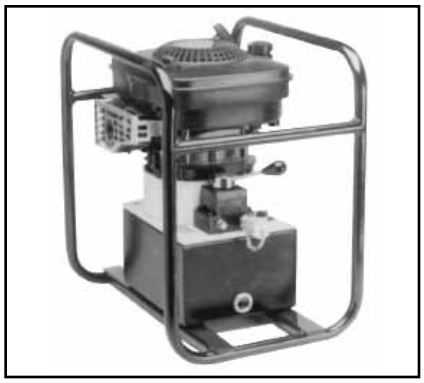

Features and Benefits

- Heavy duty gasoline engine
- Sturdy steel roll cage design
- Manual control valve
- Quick disconnect hydraulic coupler
- 8 quart reservoir
- Oil level inspection window
- Portable pump with sturdy steel roll cage
- Durable heavy-duty 4 H.P. engine for all HYPRESS™ applications and long life expectancy
- Manual control valve permits easy control of crimping or cutting operations
- Fast hose assembly with quick disconnect pressure matched hydraulic couplers
- Ample hydraulic capacity with (8) quart reservoir
- 5-year limited warranty

SPECIFICATIONS

Engine:	4 H.P., 4 cycle
Reservoir Volume:	2 gallons (8 qts.)
Pump height:	19-3/4"
Pump width:	13"
Pump length:	18"
Overall height:	22-1/4"
Overall width:	16"
Overall length:	21"
Pump and motor	
Dry Weight:	64-1/4 lbs
Overall dry weight:	77-3/4 lbs

FOR USE ON

Pump	PSI	Hydraulic Tools and Cutters
GP10	10,000	Y34BH, Y35BH, Y35BH-4, Y39BH, Y45, Y46, Y46C, Y60BHU, Y60BHU-D Y750BHXT, Y750CBHXT, RHCC Series Cutters

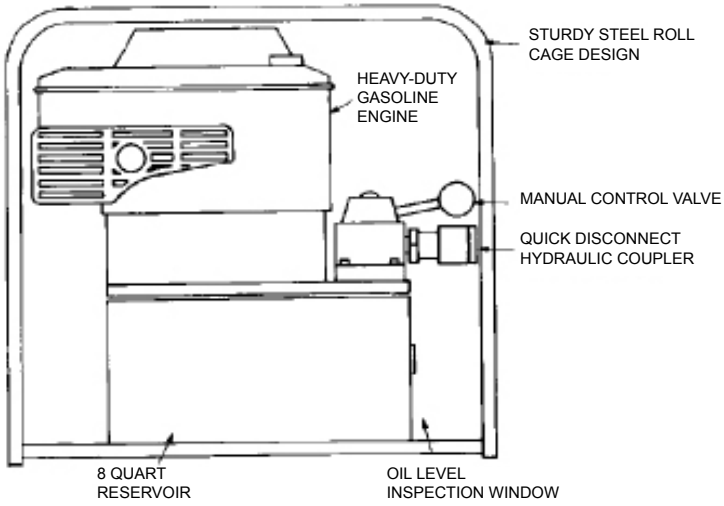

HYDRAULIC HOSES

NON CONDUCTIVE HOSES*

10,000 PSI

Cat. No.	Description
PT 29900-10	10' - 3/16" diameter - non conductive hose with stackable couplers (male/female) - orange
PT 29900-15	15' - 3/16" diameter - non conductive hose with stackable couplers (male/female) - orange
PT 29900-25	25' - 3/16" diameter - non conductive hose with stackable couplers (male/female) - orange
PT 29901-10	10' - 1/4" diameter - non conductive hose with stackable couplers (male/female) - orange
PT 29901-15	15' - 1/4" diameter - non conductive hose with stackable couplers (male/female) - orange
PT 29901-25	25' - 1/4" diameter - non conductive hose with stackable couplers (male/female) - orange

Note: 1/4″ diameter hose provides higher flow rate for faster ram movement.

* For proper care and maintenance of hydraulic hoses, consult the "Hydraulic Hose Care" manual, Form No. 7828

NON CONDUCTIVE HOSES*

6,000 PSI

Cat. No.	Description
PT 29902-10	10' - non conductive hose with stackable couplers (male/female) - orange
PT 29902-15	15' - non conductive hose with stackable couplers (male/female) - orange
PT 29902-25	25' - non conductive hose with stackable couplers (male/female) - orange
PT 29074-1	Non conductive hose carrying bag

* For proper care and maintenance of hydraulic hoses, consult the "Hydraulic Hose Care" manual, Form No. 7828

CONDUCTIVE HOSES*

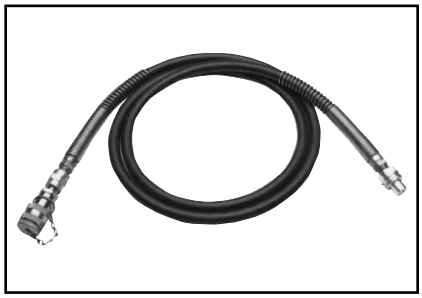

10,000 PSI

Cat. No.	Description
PT 91	8' - steel braided hose with steel spring reinforced ends. Stackable couplers (male/female) - Black. No electrical rating. DO NOT use on energized conductor.

8,000 PSI

Cat. No.	Description
PT 76	8' - steel braided hose with steel spring reinforced ends. Stackable couplers (male/female) - Black. No electrical rating. DO NOT use on energized conductor.

* For proper care and maintenance of hydraulic hoses, consult the "Hydraulic Hose Care" manual, Form No. 7828

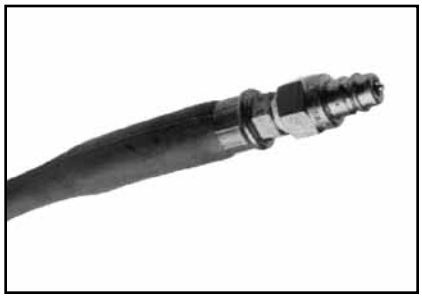

Do not attempt to repair or recouple the hose yourself!

ACCESSORIES

PT 29074-1
Insulated hose carrying bag

Designed to provide protection and cleanliness of non-conductive hoses. Accommodates 100 ft. of non-conductive coiled to 17-1/2" O.D. and 3-3/4" wide. Maximum carrying capacity: 10 lbs.

PT 29402-1 (for Y35BH)
PT 10128 (for Y46)

Adjustable Head Grip For joining HYPRESS™ heads to universal hot sticks

DIE CASES
PT 29291
(Y750, Y35/Y39) die case for "U" -type die sets

PT 6545
(Y45 and Y46) die case for "S" and "P" -type die sets

PT 29091 (male)
PT 29214-1 (female)

Replacement Coupler 6,000 PSI operating pressure

PT 94 (male)
PT 93 (female)

Replacement Coupler 10,000 PSI operating pressure

HYFLUID™
HYFLUID™ QT.
HYFLUID™ GAL.

(available in quart and gallon size containers)
Hydraulic fluid for BURNDY® HYPRESS™ hand operated tools:

Y35 and Y35-2 HYPRESS™ tools
Y39 HYPRESS™ tool
Y750 REVOLVER HYPRESS™ tools

PT 11018

In-line Pressure Gauge 10,000 PSI operating pressure for hydraulic pumps

ALFLUID™
ALFLUID™ QT.
ALFLUID™ GAL.

(available in quart and gallon size containers)
Use ALFLUID™ in hand operated tools during extended use below 32 degrees.

All weather HYDRAULIC fluid for BURNDY® pumps:
- HP hand pump
- FP foot pump
- GP gasoline pump
- EPP electric pump

ENFORCER® HIW716ENF

HYDRAULIC IMPACT WRENCH VARIABLE TORQUE

7/16" Quick Chuck

When it comes to drilling holes or tightening and loosening hardware the ENFORCER® hydraulic impact wrench (Catalog Number HIW716ENF) provides a powerful punch with 515 ft-lbs of torque that is unsurpassed in the 7/16" series of low pressure wrenches. Utilizing the very latest in CNC machining technology and superior materials, BURNDY® is proud to provide one of the toughest, lightweight wrenches ever offered in this class.

The ENFORCER® wrench comes with a 7/16" tri-ball quick chuck with a wide flange that will provide a secure hold on all standard 7/16" hex drive bits and accessories. The adjustable torque selector allows users to choose between a low setting of 200 ft-lbs and high setting of 515 ft-lbs of output torque. The dual acting spool allows the user to change from Open to Closed center operating circuits. In addition to our standard five year limited warrany, the ENFORCER™ wrench comes with a full one-year unlimited warranty on the shaft seal.

The ENFORCER® wrench comes equipped with an internal safety relief valve to protect the tool against hydraulic pressure spikes. This regulates pressure to the motor, and therefore allows excessive flow (flow which is beyond that which is required to do the work) to bypass back to the return side of the circuit.

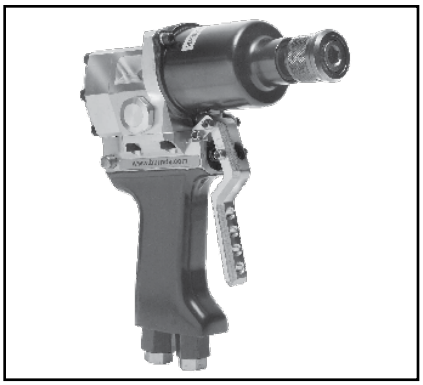

Features and Benefits

- Industry exclusive torque selector; dual torque selector spool allows users to switch between 200 and 515 ft-lb torque settings
- 7/16" Tri-ball quick chuck; allows users to quickly change bits, sockets or other hardware adaptors
- CNC Machined billet aluminum; provides superior strength, reliability and makes for the lightest tool in its class. Also provides for tighter tolerancing to ensure higher quality
- Cartridge style valves; provides for greater accuracy and more economical servicing
- Dual spool operation; allows tool to be used in either an OPEN or CLOSED center hydraulic system

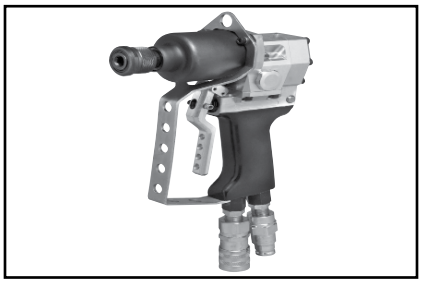

The picture above shows the HIW716ENF model with trigger guard, adaptors and couplers as listed under Accessories.

SPECIFICATIONS

Chuck Type:	7/16" Quick Chuck
Optimal Pressure:	750-2000 PSI
Flow Range:	4-12 GPM
Optimal Flow Range:	4-8 GPM
Operation:	Open/Closed option
Torque:	515 ft-lbs
Weight:	5.95 lbs
Length:	7.80"
Height:	8.90"
Width:	3.10"

ACCESSORIES

Cat. No.	Description
HIW716ENFTGKIT	Trigger guard assembly kit
HIW716ENFTG	HIW716ENF wrench provided with a factory installed HIW716ENFTGKIT
LPHTADPMMOP66	Male to male adaptor for use with couplers listed below *(Qty. 2)
LPHTHTMANOSE66	Male coupling 3/8" NPT *(Qty. 1) per tool Qty. 2 per hose
LPHTHTMABODY66	Female coupling 3/8" NPT *(Qty. 1) per tool Qty. 2 per hose
LPHTHOSNCR66668	3/8" X 8 Ft. hose set *(Qty. 1)

*(Recommended quantity for use with **HIW716ENF**)

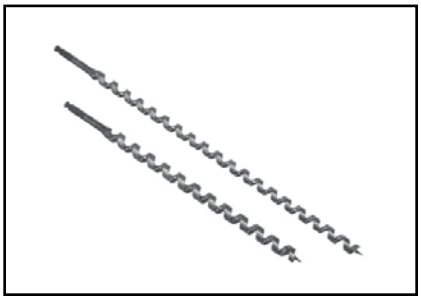

See our complete line of Auger Bits.

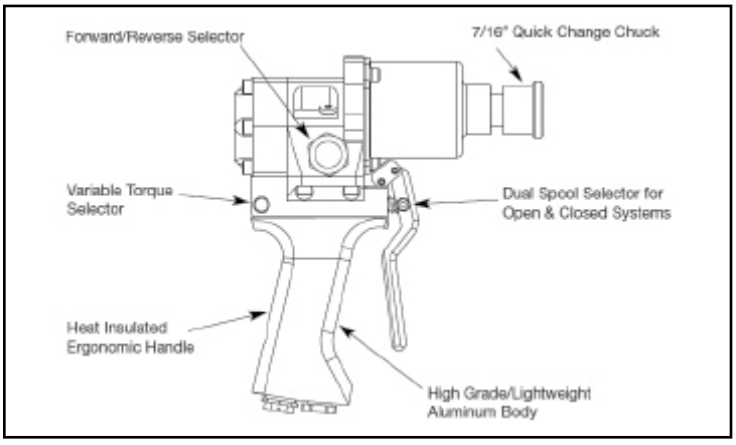

HIW716MAG

MAG Series - Machined Aluminum, Gerotor Design

The BURNDY® low pressure hydraulic impact wrench MAG Series (Machined Aluminum, Gerotor) is specifically designed for linemen and contractors needing power, reliability and enhanced ergonomics.

SPECIFICATIONS

Chuck Type:	7/16" Tri-ball Quick Chuck
Opt. Pressure:	1,000 - 2,250 PSI
Flow Range:	4 - 12 GPM
Opt. Flow Range:	4 - 8 GPM
Weight:	7.6 lbs
Torque:	550 ft-lbs
Height:	9.60"
Width:	3.60"
Length:	9.00"

Features and Benefits

- Aircraft grade extruded aluminum body and forged handle
- CNC machined parts
- Frictionless gerotor motor
- BURNDY 5-year limited warranty
- Injection molded replaceable comfort grips
- Glove-sized handle and activation trigger
- Reduced handle-to-trigger distance
- Over 550 ft-lbs of torque @ 2000 psi & 5 gpm
- Reverse flow and hook-up prevention
- Dual spool selector for Open and Closed Center use
- Pressure relief valve
- Cartridge style valve

ACCESSORIES

LPHTADPMM71612
7/16" Quick Chuck to 1/2" Square Drive adaptor
LPHTADPMMOP66 (2 required)
SAE #6 to 3/8" NPT male-to-male adaptor
LPHTHTMANOSE66
3/8" Male Coupler (flat face) with 3/8" NPT (female thread)
LPHTHTMABODY66
3/8" Female Coupler (flat face) with 3/8" NPT (female thread)
LPHTHOSNCR66668
8', 3/8" NPT, 3/8" NPT Non-Conductive Hose
LPHTADPSMOP66 (2 required) SAE swivel

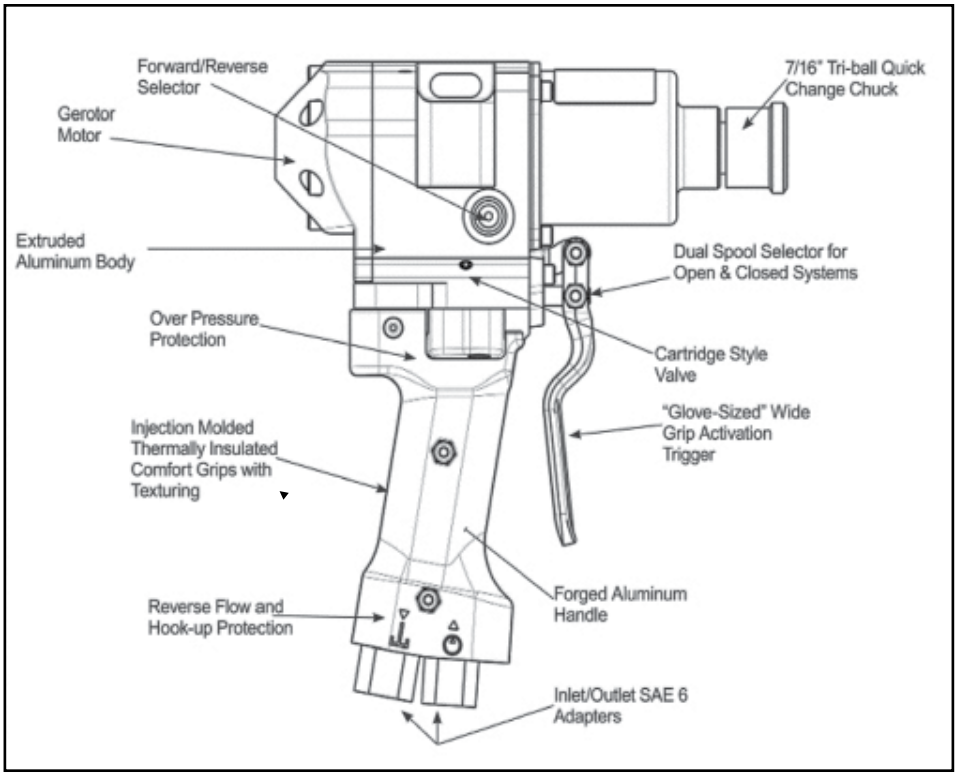

Drilling Solutions
Auger Bits

Auger Bits for Wood,
Fiberglass, Composite Poles

When it comes to drilling holes in wood, fiberglass or composite materials, the BURNDY line of drilling bits can meet the challenge.

Each bit is designed for specific application requirements. This results in superior performance enabling the job to get done right the first time.

These auger bits, when coupled with the high performance BURNDY impact wrenches, provide the end user with an "Engineered System" of unparalleled reliability and performance – the hallmark of BURNDY products.

Design Selection Chart

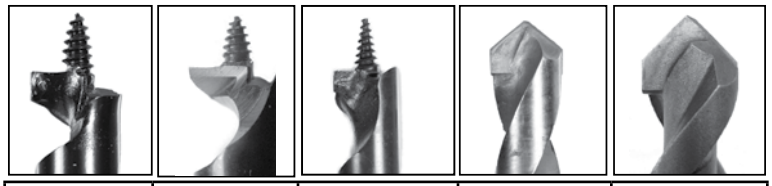

	DOMINATOR	RAZOR	ELIMINATOR™	HOLLOW CORE	SOLID CORE
Material Drilled	Treated Wood	Treated Wood	Treated Wood	Fibreglass Composite	Fibreglass Composite
TIP	Hardened Steel	Hardened Steel	Carbide Tip	Carbide Tip	Carbide Tip
Features and Benefits	Single flute Aggressive lead screw Very fast drilling Cuts hardest of woods Self-feeding	Single flute Aggressive lead screw Added "spur" Fast drilling Extra clean holes No re-drilling required Self feeding	Carbide tip Single flute Patented cutting geometry Fast drilling Very clean holes Easy fastener insertion Lowest cost/hole drilled Can be refur-bished	Specialized short flute "Solid" body design Carbide Tip Engineered cutting tip Designed for fiberglass Cuts quickly and cleanly No splinters No melting Drill both holes at once Can be re-sharpened	Specialized long flute "Fluted" body design Carbide Tip Engineered cutting tip Designed for fiberglass Cuts quickly and cleanly No splinters No melting Removes debris quickly Drill both holes at once Can be re-sharpened
HOLES*	100+	100+	2000+	500+	500+

*Approximate comparison of # holes drilled/bit

HIW716MAG

Drilling Solutions
Auger Bits

Auger Bits for Wood,
Fiberglass, Composite Poles

Auger Bit Part Number Chart

		TREATED WOOD			FIBERGLASS/COMPOSITE	
OAL	DIA	DOMINATOR	RAZOR	ELIMINATOR™	HOLLOW CORE	SOLID CORE
8”	9/16”		LPHTBIT9168R			
12”	9/16”				LPHTBIT91612HC	
12”	11/16”				LPHTBIT111612HC	LPHTBIT111612SC
12”	13/16”				LPHTBIT131612HC	LPHTBIT131612SC
12”	1 1/8”				LPHTBIT11812HC	
18”	11/16”				LPHTBIT111618HC	
18”	13/16”				LPHTBIT131618HC	LPHTBIT131618SC
18”	1/2”			LPHTBIT1218		
18”	9/16”		LPHTBIT91618R			
18”	5/8”	LPHTBIT5818D	LPHTBIT5818R			
18”	11/16”	LPHTBIT111618D	LPHTBIT111618R	LPHTBIT111618		
18”	3/4”	LPHTBIT3418D	LPHTBIT3418R			
18”	13/16”	LPHTBIT131618D	LPHTBIT131618R	LPHTBIT131618		
18”	7/8”	LPHTBIT7818D				
18”	15/16”	LPHTBIT151618D	LPHTBIT151618R	LPHTBIT151618		
24”	5/8”	LPHTBIT5824D				
24”	11/16”	LPHTBIT111624D	LPHTBIT111624R			
24”	3/4”	LPHTBIT3424D				
24”	13/16”	LPHTBIT131624D	LPHTBIT131624R	LPHTBIT131624		
24”	15/16”	LPHTBIT151624D	LPHTBIT151624R			
24”	1 1/8”	LPHTBIT11824D	LPHTBIT11824R			

Other styles and sizes are available on request

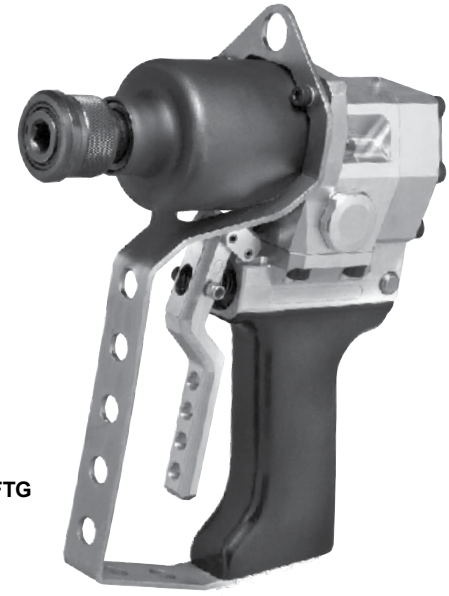

HIW716ENFTG

KOMPRESSOR™ LPHY750XT AND LPHY750CXT

Remote Operated 12 Ton
Low Pressure Hydraulic
Compression Tool

The BURNDY® LPHY750XT KOMPRESSOR™ is a lightweight, compact, low pressure, hydraulic 12 ton crimping tool. The LPHY750XT is double acting for hydraulic ram advance and retract. The KOMPRESSOR™ also has an industry exclusive spring back-up for ram retraction in case of loss of hydraulic pressure. The LPHY750XT comes equipped with an ergonomic handle designed for better balance, which helps lessen fatigue to the operator.

The LPHY750XT KOMPRESSOR™ features the BURNDY® 750XT tool head with a 1.65" jaw opening capable of using all industry standard BURNDY® "U" dies. The LPHY750XT has an industry exclusive visual crimp indicator to assure the operator of a properly completed crimp. The LPHY750XT also has an audible crimp indicator.

The LPHY750XT is powered directly from open center or closed center hydraulic tool circuits present on most utility line trucks or can be operated from individual low-pressure hydraulic power units. The LPHY750XT can be switched from open center to closed center operation with a simple external adjustment. The LPHY750XT does not require any additional tooling such as boosters, intensifiers, or hand controls in the bucket. The tool has a 5-year limited warranty.

Features and Benefits

- **LPHY750CXT** covered version available.
- Visual and audible crimp indicator assures properly completed crimps with 12 tons of force
- Covers a wide range of applications with its 1.65" jaw opening
- 350° head rotation for versatile tool head positioning allowing the user to get into tight areas easier
- Uses all standard BURNDY® "U" dies
- Operates on open center or closed center hydraulic systems
- Ergonomic handle design for better balance and helps lessen fatigue
- Double acting tool for hydraulic ram advance and retraction
- Spring back up for ram retraction if hydraulic system shuts down
- 5-year limited warranty

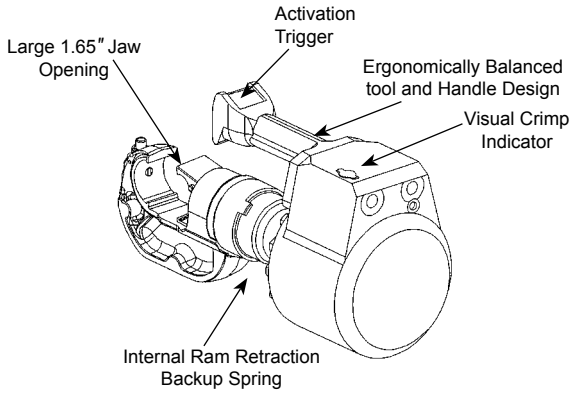

SPECIFICATIONS

Flow Rate:	3 - 9 GPM (11 - 34 LPM)
Operating Pressure:	1,500 - 2,500 PSI (103 - 172 BAR)
Force Developed:	12 Tons
Weight:	21 lbs (9.5 kg)
Overall Length:	20.65" (524 mm)
Width:	15" (381 mm)
Jaw Opening:	1.65" (42 mm)
Max. Back Pressure:	250 PSI (17 BAR)
Crimp Time:	Approximately 2 seconds

FOR USE ON

- **Tension Sleeves**
  - Copper #8 sol - 500 kcmil
  - Aluminum #8 sol - 587.2 kcmil
  - ACSR #4 - 556.5 kcmil
- **Taps**
  - Copper #14 sol - 500 kcmil
  - Aluminum #8 sol - 500 kcmil
- **Aerial Cable**
  - Copper #6 - 500 kcmil
- **Terminals and Splices**
  - Copper #8 - 750 kcmil
  - Aluminum #8 - 750 kcmil
  - ACSR #4 - 556.5 kcmil
- **HYGROUND®**
  - Copper #8 - 500 kcmil
  - Ground Rods 1/2" - 1" diameter

ACCESSORIES

Hoses:
Cat No. **LPHTHOSNCR66668OP**
Direct connect 8' non-conductive hose set
Cat No. **LPHTHOSNCR666610OP**
Direct connect 10' non-conductive hose set
*Cat No. **LPHTHOSNCR66668**
8' non-conductive hose set
*Cat No. **LPHTHOSNCR666610**
10' non-conductive hose set
Hydraulic Fittings:
Cat No. **LPHTHTMANOSE66**
Male coupler 3/8" HTMA
Cat No. **LPHTHTMABODY66**
Female coupler 3/8" HTMA
Cat No. **LPHTADPSMFOP66**
Swivel Adapter

*These hoses are used with the **LPHTADPSMFOP66** swivel adapter.

HBR40

HYDRAULIC BREAKER

Light and Medium Duty

Features and Benefits

- Light to Medium Duty breakers powerful enough for most breaking applications
- Control trigger built into handle
- Provided with 18" braided whip hoses (order HTMA couplers separately)
- Standard tool attachment mechanism allows use of all standard tool bits
- No compressed air exploding into atmosphere spreading dirt, dust and noise
- Hydraulic cushioning of return stroke reduces operator shock and fatigue
- Hand grips at comfortable working height
- Hydraulic operation provides continuous lubrication of all moving parts
- 5-year limited warranty

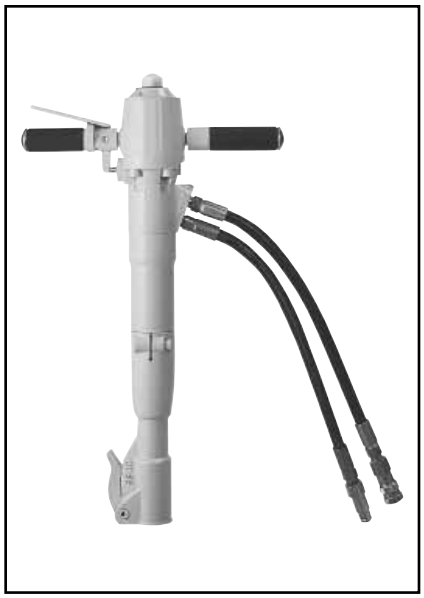

SPECIFICATIONS

Flow:	4-7 GPM (15-27 LPM)
Optimum Flow:	4 GPM (15 LPM)
Pressure:	1200-2000 PSI (85-140 BAR)
Max. Back Pressure:	150 psi (11 BAR)
Weight:	40-48 lbs
Length:	25"
Tool Steel Capacity:	1" x 4-1/4"
Performance:	(1500 BPM) 45-55 lb. class breakers
Whip Hoses:	18" with 3/8" NPT fittings

HBR66

HYDRAULIC BREAKER

Medium and Heavy Duty

Features and Benefits

- Medium to Heavy Duty breakers suitable for extended periods of operation
- Control trigger built into handle
- Provided with 18" braided whip hoses (order HTMA couplers separately)
- Standard tool attachment mechanism allows use of all standard tool bits
- No compressed air exploding into atmosphere spreading dirt, dust and noise
- Hydraulic cushioning of return stroke reduces operator shock and fatigue
- Hand grips at comfortable working height
- Hydraulic operation provides continuous lubrication of all moving parts
- 5-year limited warranty

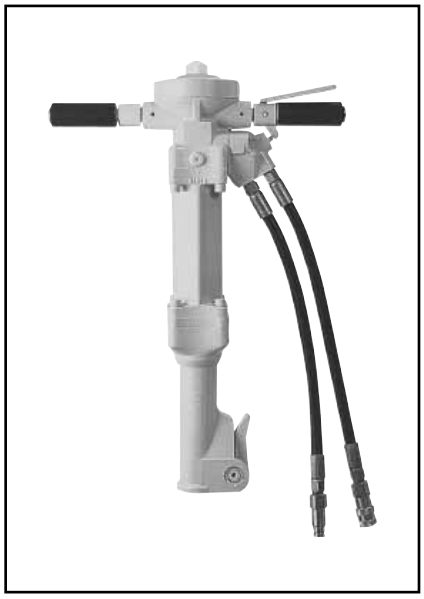

SPECIFICATIONS

Flow:	4-7 GPM (15-27 LPM)
Optimum Flow:	4 GPM (15 LPM)
Pressure:	1200-2000 psi (85-140 BAR)
Max. Back Pressure:	150 psi (11 BAR)
Weight:	50-67 lbs.
Length:	27" to 35"
Tool Steel Capacity:	1-1/4" x 6"
Performance:	60-80 lb. class series
Whip Hoses:	18" with 3/8" NPT fittings

HTP3, HP3

3" SUBMERSIBLE PUMPS

The HP3 and HTP3 hydraulic submersible pumps are designed to reliably pump large volumes of liquids and solids (per specifications). HP and HTP models are durable and offer a very high performance-to-weight ratio. These pumps are self-lubricating, utilizing the hydraulic fluid in a closed loop to ensure consistent, reliable lubrication. The units can be run dry as they do not require water for cooling purposes whether submersed or not.

The high output and compact nature of these pumps make them ideal for pumping out vaults, trenches, ditches, ponds, tanks, pools, etc. in a multitude of industries including agriculture, construction, mining, utilities, public works, departments of transportation, and more.

Features and Benefits

- Totally submersible
- Pumps solids without blockage or damage
- Self lubricating design
- Cast aluminum pump body
- Double-sealed hydraulic motor shaft protects hydraulic source from water
- Thumb screw secured lid so cover is easy to remove without special tools
- Provided with whip hoses
- High impact, abrasion resistant liner
- 5-year limited warranty

3″ Submersible Pump
HP3

3″ Submersible Pump
HTP3

SPECIFICATIONS

HP3

Flow:	7-10 GPM (27-38 LPM)
Pressure:	1000-2000 PSI (70-140 BAR)
Weight:	36 lbs (16.34 kg)
Pump capacity:	750 GPM (2800 LPM)
Operation:	Open/Closed center
Discharge size:	3" outlet (3" Male Cam-Lock)
Maximum lift:	50 ft. (21.34 m)
Motor:	Gear Motor

ACCESSORIES

Cat. No.	Description
HOSE325	25 ft. long hose
HOSE350	50 ft. long hose

SPECIFICATIONS

HTP3

Flow:	7-10 GPM (27-38 LPM)
Pressure:	1000-2000 PSI (70-140 BAR)
Max. Back pressure:	250 PSI (17 BAR)
Weight:	40 lbs (18.16 kg)
Pump capacity:	500 GPM (1900 LPM)
Operation:	Open/Closed center
Discharge size:	3" outlet (3" Male Cam-Lock)
Motor:	Gear Motor
Diameter:	12" (30.5 cm)
Maximum lift:	40 ft. (18.29 m)
Ports:	1/2" X 14 (#8) NPT (F)

HP2HV (HIGH VOLUME)

2" SUBMERSIBLE PUMPS

Features and Benefits

- Totally submersible
- Self lubricating design
- Lightweight cast aluminum pump body
- Built-in lifting handle/eye
- Self-priming pump
- Provided with whip hoses
- Unit can run dry without damage
- HP2HV adaptable to either 2" or 2-1/2" discharge
- 5-year limited warranty

SPECIFICATIONS

Flow:	4-9 GPM
Pressure:	1000-2000 PSI (70-140 BAR)
Weight:	13 lbs
Pump Capacity:	340 GPM
Operation:	Open/Closed center
Maximum Lift:	80 GPM @ 70 ft
Motor:	Gerotor Motor

ACCESSORIES

Cat. No.	Description
HP2CAMLOCKHOSESET	HOSE SET KIT
HOSE2	25 ft. long hose

HPTR1 Series

POLE TAMPERS

The HPT hydraulic pole tampers are designed to provide trouble-free service for compacting around poles, posts, footings and other objects.

The pole tamper operates best on a flow rate of 4 gal/min. operating pressure. Force of blow, and frequency of blow will be a function of the flow rate provided. A minimum of 1000 lb/in^2 operating pressure is essential in order to obtain the maximum output performance.

The unique patented valving of the HPT pole tamper provides low maintenance, long life and superior handling characteristics because there is no mechanical impacting of the ram within the tamper. The oil reverses the stroke before bottoming out, preventing the tamper from hammering itself when running free between compaction strokes.

These features provide unexcelled compaction while virtually eliminating kick-back to the operator's hand.

Tamper shoes sold separately.

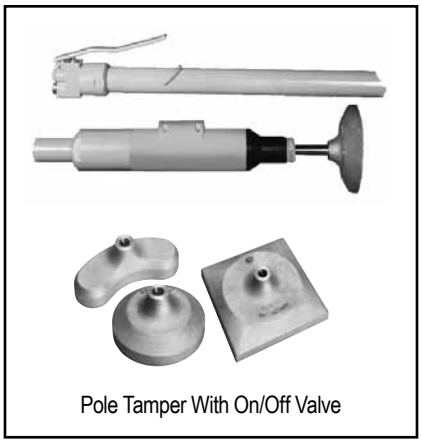

Pole Tamper With On/Off Valve

Pole Tamper With No On/Off Valve

Features and Benefits

- Available with or without On/Off control valve
- Patented valving prevents impacting of the ram within the tamper
- Stroke amplitude of 1-5/8"
- Stroke frequency of 1375 blows/min is ideal for compacting around poles, posts, footings, and other objects
- Interchangeable heavy duty tamper shoes allows for flexibility
- 5-year limited warranty

SPECIFICATIONS

Flow:	4-10 GPM (15-38 LPM)
Pressure:	1000–2000 PSI (70–140 BAR)
Max. Back Pressure:	250 PSI (17 BAR)
Operation:	Open/Closed center
Stroke Amplitude:	1-5/8"
Stroke Frequency:	1375 per minute
Tool Ports:	#6 SAE O-Ring (F)

With On/Off Valve			No On/Off Valve		
Catalog Number	Overall Length	Weight (Approx.)	Catalog Number	Overall Length	Weight (Approx.)
HPT-60-R1	60" (152 cm)	29 lbs. (13 kg)	HPT-59-R1	59" (150 cm)	26 lbs. (12 kg)
HPT-72-R1	72" (183 cm)	30 lbs. (14 kg)	HPT-71-R1	71" (180 cm)	28 lbs. (13 kg)
HPT-84-R1	84" (213 cm)	32 lbs. (15 kg)	HPT-83-R1	83" (211 cm)	31 lbs. (14 kg)
HPT-96-R1	96" (244 cm)	34 lbs. (15.4 kg)	–	–	–

ACCESSORIES

Tamper shoes must be ordered separately.

Cat # **TS-KD**:	Kidney shoe, 3" x 8" (7.6 x 20.3 cm)
Cat # **TS-RD**:	Round show, 6" dia. (15.2 cm dia.)
Cat # **TS-SQ**:	Square shoe, 8" x 8" (20.3 x 20.3 cm)

Kidney Shoe

Whip Hoses must be ordered separately.

Cat # **LPWHPKITD**

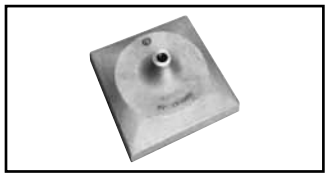

Square Shoe

Round Shoe

HHS SERIES

HAND CHAIN SAWS

The lightweight Hydraulic Hand-held Chain Saw was designed for the ease of handling, balance and dependability. A Gerotor motor provides the hand-held chain saw with a high level of torque and horsepower for long and trouble-free operation. The handle remains cooler because no hydraulic fluid flows through the grip. An automatic chain oiler is another feature of the saw. In addition, the guide bar contains a nose sprocket for improved cutting performance and reduced wear of the guide bar. The saws are furnished with a .325" pitch anti-kick back chain. The dual spool trigger design enables operation of the tool on both open-center and closed-center systems.

Features and Benefits

- Gerotor type motor has lifetime warranty
- Supplied with .325" pitch anti-kickback chain for maximum safety
- Dual action spool quickly and easily changes from Open to Closed center operation
- Automatic, adjustable chain oiler enables longer running time without damage to chain/ bar due to lack of lubrication
- Low RPM and high torque – minimizes saw kickback
- Choice of 13", 16" or 20" bars
- 5-year limited warranty

Catalog Number	Overall Length	Bar Length	Cutting Capacity	Weight (Approx.)
HHS-O/C-B13	24"	15-1/2"	13"	7-1/2 lbs
HHS-O/C-B16	27"	18-1/2"	16"	8 lbs
HHS-O/C-B20	30"	22-1/2"	20"	8-1/2 lbs

HPS SERIES

POLE CHAIN SAWS

The HPS hydraulic pole saws are designed for safety, convenience and function. The fiberglass extension provides lightweight strength reducing operator fatigue. The trigger guard helps to prevent accidental motor start. The high speed, high performance Gerotor motor enables these pole saws to tackle the toughest of pruning or clearing jobs. Pole chain saw models have a disk next to the sprocket to lessen the danger of a poorly adjusted chain from coming off the sprocket. In addition, the guide bar contains a self-lubricating oiling system to help reduce wear and increase performance. Non-conducting fiberglass poles tested to meet OSHA regulation 1910.269.

SPECIFICATIONS

HHS & HPS

Flow:	5-8 GPM (19-30 LPM)
Pressure:	1000-2000 PSI (70-140 BAR)
Operation:	Open/Closed center
Motor:	Gerotor
Chain:	.325" pitch anti-kick-back
Tool ports:	#6 SAE O-Ring (F)
Max. Back pressure:	250 PSI (17 BAR)

Catalog Number	Overall Length	Bar Length	Bar Length	Cutting Capacity	Weight (Approx.)
HHS-O/C-4-B13	76" (6'4")	48" (4')	15-1/2"	13"	9 lbs
HHS-O/C-5-B13	88" (7'4")	60" (5')	15-1/2"	13"	9-1/2 lbs

Features and Benefits

- Gerotor motor has lifetime warranty
- Dual action spool quickly and easily changes from Open to Closed center operation
- Automatic, adjustable chain oiler enables longer running time without damage to chain/ bar due to lack of lubrication
- 0.325" pitch anti-kick back chain supplied standard
- Low RPM and high torque –– minimize saw kickback
- 5-year limited warranty

HPS-LW SERIES

POLE CHAIN SAWS

The HPS-LW Series of low pressure hydraulic pole saws offers users both a rugged and ergonomically balanced tool for tree trimming operations in the most demanding environments. This series incorporates all the features required for operational user safety and long term reliability in the field.

The unique body and handle are CNC machined from solid aircraft grade aluminum billet. This results in a highly repeatable and manufacturable design with very tight tolerances contributing to increased performance, efficiency and long term reliability in the field.

The HPS-LW series come with a 5-year limited warranty.

SPECIFICATIONS

Flow: 4 - 8 GPM (16-30 LPM)
Pressure: 1,000 - 2,000 psi (70-140 BAR)
Operation: Open/Closed center
Motor: Gear
Chain: .325" pitch anti-kickback
Pressure Port: #6 SAE O ring
Return Port: #6 SAE O ring

Catalog Number	Overall Length	Pole Diameter	Cutting Capacity	Weight (Approx.)
HPS1371LW	71"	1.312"	13"	8.0 lbs
HPS1383LW	83"	1.312"	13"	8.2 lbs

Features	Benefits
Aircraft grade solid Aluminum body and handle	Rugged material for long term use
CNC Machined body and handle	Repeatable performance, minimized leaking
Cartridge style valve	Eliminates "wear" to handle body reducing material and labor costs
Dual Open Center and Closed Center settings	Match truck circuits
External bar oiler	Increased saw use and chain/bar longevity
2-stage safety trigger, anti-kickback chain, "anti-slip" grip	Increased user protection for additional safety
Hook feature	Ease of branch clearing

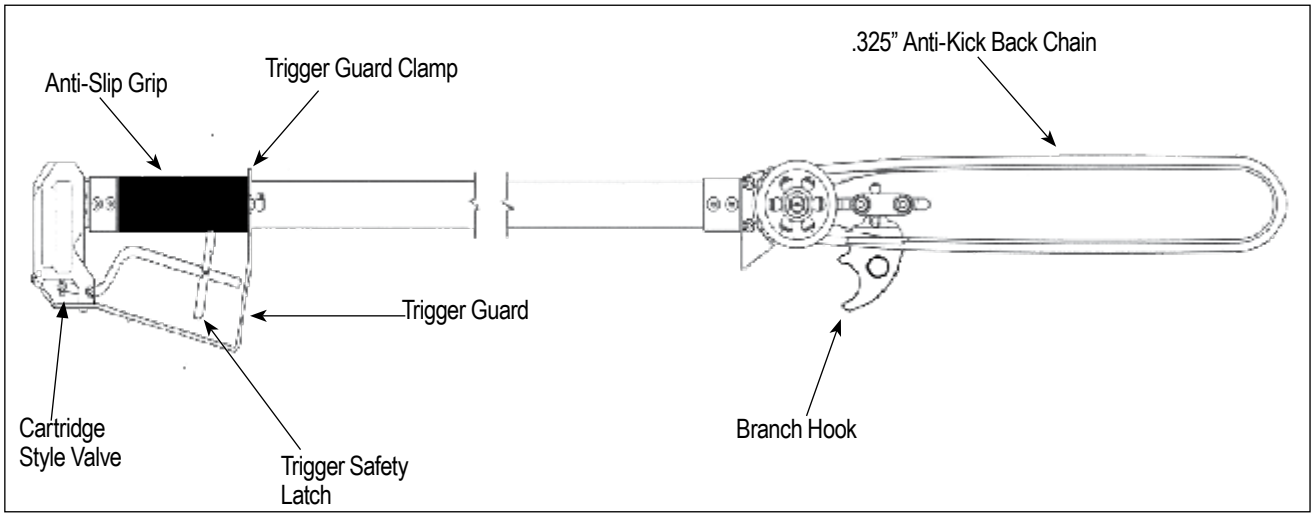

HPP18, HPP18-2

HYDRAULIC POWER PACK

Cat # **HPP18** (Single Circuit)
Cat # **HPP18-2** (Dual Circuit)

The HPP18-2 Hydraulic Power Pack is designed to provide hydraulic flow and pressure for operation of HTMA Type I and Type II hydraulic tools. The power pack is equipped with an 18 HP gas engine. The power packs are all equipped with air-to-oil coolers with suction fan mounted to the power shaft on the engine. The fuel and hydraulic systems are self-contained with the required reservoir, filtration and level indicators.

The hydraulic system consists of a hydraulic system fluid reservoir; filter assembly, single (HPP18) or tandem pump (HPP18-2), and a wide variety of flow controls. The filter element is a "spin on" type element for easy replacement. The filter housing has a pressure bypass valve to divert fluid directly to the tank in the event of a restricted filter. Only the hydraulic pumps are called out in the parts section of this manual. Pressure hoses from the pumps are connected directly to a control module, which contains a relief valve, a flow control valve, and pressure and return ports. 5 gallon hydraulic reservoir for cooler oil operation.

Features and Benefits

- Briggs & Stratton 18 HP VANGUARD gas engine (twin OHV cylinders)
- Integral oil cooling system with fully shrouded fan and changeable oil filter
- Fold away locking handle for easy job site portability
- Electronic ignition with key start, 12 Volt battery
- Features manual choke and an adjustable throttle mechanism with lock/adjustment
- Variable GPM output valve provides fluid flow from 1-10 GPM @ 2,000 psi (HPP18 only)
- HPP18-2 is a dual circuit unit: (1) 10 GPM or (2) 5 GPM
- HPP18-2 has the ability to operate two (2) 5 GPM tools simultaneously or one (1) tool up to 10 GPM

SPECIFICATIONS

HPP18

Output/Flow:	1 @ 2,000 PSI @ 1-10 GPM (138 Bar @ 0-38 LPM)
Dry Weight:	233 lbs (105.6 kg)
Length:	35" (88.9 cm)
Width:	29" (73.6 cm)
Height:	32" (81.2 cm)
Motor:	18 HP @ 3500 RPM

HPP18-2

Output/Flow:	2 @ 2,000 PSI @ 5 GPM or 1@ 2,000 PSI @ 10 GPM
Dry Weight:	233 lbs (105.6 kg)
Length:	35" (88.9 cm)
Width:	29" (73.6 cm)
Height:	32" (81.2 cm)
Motor:	18 HP @ 3500 RPM

HPP5

HYDRAULIC POWER PACK

Features and Benefits

- Honda 5.5 HP engine with recoil start for reliability, ease of use and minimal maintenance
- Lightweight and compact, weighing only 83 lbs. Easily transported and can be picked up by one person
- Air blast oil cooler/radiator system with thermostatic control, prevents overheating of the hydraulic oil

- Built with a robust stainless steel frame and wheel kit, provides outstanding protection during use and transport
- Operating controls are basic and easy to use

SPECIFICATIONS

Engine:	Honda 5.5 HP recoil start
Operating Pressure:	1450 PSI
Flow:	5.4 GPM
Dry Weight:	83 lbs
Fuel Tank Capacity:	1 gallon
Hyd. Oil Capacity:	1.25 gallons
Length:	20"
Width:	17"
Height:	18"

Catalog Number	Description
LPHT3CHISEL11418	3" Chisel, 1-1/4" hex, 18" Long
LPHTASPHALTCUT118	Asphalt Cutter, 1-1/8" hex
LPHTCLAYSPADE118	Clay Spade, 1-1/8" hex
LPHTGRDVR11458	Ground Rod Driver, 1-1/4" hex, 5/8" Rod
LPHTGRDVR11858	Ground Rod Driver, 1-1/8" hex, 5/8" Rod
LPHTMOILPT118	Moil Point, 1" hex, 18" Long
LPHTMOILPT11814	Moil Point, 1-1/8" hex, 14" Long
LPHTNARCHISEL11814	Narrow Chisel, 1-1/8" hex, 14" Long
LPHTADPMM71612	7/16" Quick Chuck Adaptor X 1/2" Square
HIW71612TGKIT	Trigger Guard for HIW-716
LPHTADPMMOP66	ADP Male/Male SAE #6, 3/8 NPT (2 required per tool)
Auger Bits (call for many additional options)	
LPHTBIT111618D	11/16" X 18" Long X 7/16 QC; Dominator
LPHTBIT111624D	11/16" X 24" Long X 7/16 QC; Dominator
LPHTBIT131618D	13/16" X 18" Long X 7/16 QC; Dominator
LPHTBIT131624D	13/16" X 24" Long X 7/16 QC; Dominator
LPHTBIT151618D	15/16" X 18" Long X 7/16 QC; Dominator
LPHTBIT151624D	15/16" X 24" Long X 7/16 QC; Dominator
Hoses (call for many additional options) red or orange	
LPHTHOSNCR666610	Hose - Insulated, 10 ft., 3/8 NPT, 3/8 NPT
LPHTHOSNCR66668	Hose - Insulated, 8 ft., 3/8 NPT, 3/8 NPT
LPHTHOSNCR66668OP	Hose - Insulated, 8 ft., SAE #6, 3/8 NPT
LPHTHOSNCR666610OP	Hose - Insulated, 10 ft., SAE #6, 3/8 NPT
Couplers (call for many additional options)	
LPHTDRIPBODY66	Dripless Body - 3/8 Body, 3/8 NPT
LPHTDRIPBODY88	Dripless Body - 1/2 Body, 1/2 NPT
LPHTDRIPNOSE66	Dripless Nose - 3/8 Body, 3/8 NPT
LPHTDRIPNOSE88	Dripless Nose - 1/2 Body, 1/2 NPT
LPC38S	3/8, 3/8 NPT Flush Face Coupler Set - Body & Nose
LPC12S	3/8, 1/2 NPT Flush Face Coupler Set - Body & Nose
LPHTHTMADUSTCAPF	HTMA Dust Cap - Body
LPHTHTMADUSTCAPM	HTMA Dust Cap - Nose
Sockets	
LPHTSOC121/118	Dual Socket - 1/2" Drive X 1" X 1-1/8"
LPHTSOC121316/1516	Dual Socket - 1/2 Drive X 13/16" & 15/16"
LPHTSOC121	Socket - 1/2" Drive X 1"
LPHTSOC121116	Socket - 1/2" Drive X 11/16"
LPHTSOC12112	Socket - 1/2" Drive X 1-1/2"
LPHTSOC12114	Socket - 1/2" Drive X 1-1/4"
LPHTSOC12118	Socket - 1/2" Drive X 1-1/8"
LPHTSOC121188PT	Socket - 1/2" Drive X 1-1/8", 8 Point
LPHTSOC1212	Socket - 1/2" Drive X 1/2"
LPHTSOC12128PT	Socket - 1/2" Drive X 1/2", 8 Point
LPHTSOC121316	Socket - 1/2" Drive X 13/16"
LPHTSOC1213168PT	Socket - 1/2" Drive X 13/16", 8 Point
LPHTSOC12138	Socket - 1/2" Drive X 1-3/8"
LPHTSOC1215168PT	Socket - 1/2" Drive X 15/16", 8 Point
LPHTSOC121716	Socket - 1/2" Drive X 1-1/16"
LPHTSOC1217168PT	Socket - 1/2" Drive X 1-1/16", 8 Point
LPHTSOC1218PT	Socket - 1/2" Drive X 1", 8 Point
LPHTSOC1234	Socket - 1/2" Drive X 3/4"
LPHTSOC12348PT	Socket - 1/2" Drive X 3/4", 8 Point
LPHTSOC1258	Socket - 1/2" Drive X 5/8"
LPHTSOC12588PT	Socket - 1/2" Drive X 5/8", 8 Point
LPHTSOC1278	Socket - 1/2" Drive X 7/8"
LPHTSOC12788PT	Socket - 1/2" Drive X 7/8", 8 Point
LPHTSOC12916	Socket - 1/2" Drive X 9/16"
HIW12SOCSET	Socket Set - 1/2" Drive DP IMP 6 Point

This is a generic sample of the more than 200 accessory items available.If you do not see what you are looking for, call us at BURNDY and we will get it for you: **1-800-346-4175**.

BKOM50125

KNOCKOUT SET

For 1/2"– 1-1/4" Conduit Size

The BURNDY® Knockout Set is designed to punch holes for 1/2" – 1-1/4" conduit in distribution boxes, electrical panels and troughs.

The Knockout Set is provided with a 1-year limited warranty.

Features and Benefits

- Four-point design allows slug to drop automatically without splitting
- Punches up to 10-gauge mild steel
- Set includes the four most popular sizes of punches and dies packed in a sturdy storage case
- 1-year limited warranty

SET INCLUDES

Catalog Number	Description	Hole	Weight
BKP500B	1/2" Punch	7/8"	0.4 lb.
BKD500B	1/2" Die	7/8"	1 lb.
BKP750B	3/4" Punch	1 - 3/32"	0.4 lb.
BKD750B	3/4" Die	1 - 3/32"	1 lb.
BKP1000B	1" Punch	1 - 11/32"	1 lb.
BKD1000B	1" Die	1 - 11/32"	1 lb.
BKP1250B	1 - 1/4" Punch	1 - 11/16"	2 lb.
BKD1250B	1 - 1/4" Die	1 - 11/16"	2 lb.
BKSB50B	1/2" Bearing & Drive Screw	-	1 lb.
BKS752B	3/4" - 2" Bearing & Drive Screw	-	1 lb.
BK88004	Storage Case	-	1.5 lb.

BKOM50125 SPECIFICATIONS

Description	Weight
1/2" - 1-1/4" Knockout Set	3 lbs

ACCESSORIES

Components for the kit listed above can be purchased separately.

BKOM152

KNOCKOUT SET

For 1-1/2" – 2" Conduit Size

The BURNDY® Knockout Set is designed to punch holes for 1-1/2" – 2" conduit in distribution boxes, electrical panels and troughs.

The Knockout Set is provided with a 1-year limited warranty.

Features and Benefits

- Four-point design allows slug to drop automatically without splitting
- Punches up to 10-gauge mild steel
- Durable storage case
- 1-year limited warranty

SET INCLUDES

Catalog Number	Description	Hole	Weight
BKP1500B	1 - 1/2" Punch	1 - 15/16"	2 lb.
BKD1500B	1 - 1/2" Die	1 - 15/16"	2 lb.
BKP2000B	2" Punch	2 - 3/8"	2 lb.
BKD2000B	2" Die	2 - 3/8"	2 lb.
BKS752B	3/4" - 2" Bearing & Drive Screw	—	1 lb.
BK88001	Storage Case	—	1.5 lb.

BKOM152 SPECIFICATIONS

Description	Weight
1-1/2" - 2" Knockout Set	4 lbs

ACCESSORIES

Components for the kit listed above can be purchased separately.

BKOH2540

ASSORTED KNOCKOUT KIT

For 2-1/2" – 4" Conduit Size

The BURNDY® Assorted Knockout Kit is designed to punch holes for 2-1/2" – 4" conduit in distribution boxes, electrical panels and troughs.

The Knockout Kit is provided with a 1-year limited warranty.

Features and Benefits

- Expand capability of 1/2" – 2" sets
- Four-point design allows slug to drop automatically without splitting
- Punches up to 10-gauge mild steel
- Packed in metal storage case
- 1-year limited warranty

SET INCLUDES

Catalog Number	Description	Hole	Weight
BKP2500	2 - 1/2" Punch	2 - 7/8"	3 lb.
BKD2500	2 - 1/2" Die	2 - 7/8"	3 lb.
BKP3000	3" Punch	3 - 1/2"	4 lb.
BKD3000	3" Die	3 - 1/2"	4 lb.
BKP3500	3 - 1/2" Punch	4"	4 lb.
BKD3500	3 - 1/2" Die	4"	4 lb.
BKP4000	4" Punch	4 - 1/2"	4 lb.
BKD4000	4" Die	4 - 1/2"	4 lb.
BK88008	Metal Storage Case	-	5 lb.

BKOH2540 SPECIFICATIONS

Description	Weight
2-1/2" - 4" Knockout Set	22 lbs

ACCESSORIES

Components for the kit listed above can be purchased separately.

BKOW520

KNOCKOUT SET WITH RATCHET WRENCH

For 1/2" – 2" Conduit

The BURNDY® Knockout Set with Ratchet Wrench is designed to punch holes for 1/2" – 2" conduit in distribution boxes, electrical panels and troughs.

The Knockout Set with Ratchet Wrench is provided with a 1-year limited warranty.

Features and Benefits

- Four-point design allows slug to drop automatically without splitting
- Punches up to 10-gauge mild steel
- Set includes ratchet wrench, six sizes of punches and dies, and two drive screws; all packaged in a rugged storage case
- 1-year limited warranty

BKOW520 SPECIFICATIONS

Description	Weight
1/2"- 2" Knockout Set with Ratchet wrench (BKW52)	12 lbs

ACCESSORIES

Components for the kit listed above can be purchased separately.

SET INCLUDES

Catalog Number	Description	Hole	Weight
BKP500B	1/2" Punch	7/8"	0.4 lb.
BKD500B	1/2" Die	7/8"	1 lb.
BKP750B	3/4" Punch	1 - 3/32"	0.4 lb.
BKD750B	3/4" Die	1 - 3/32"	1 lb.
BKP1000B	1" Punch	1 - 11/32"	1 lb.
BKD1000B	1" Die	1 - 11/32"	1 lb.
BKP1250B	1 - 1/4" Punch	1 - 11/16"	2 lb.
BKD1250B	1 - 1/4" Die	1 - 11/16"	2 lb.
BKP1500B	1 - 1/2" Punch	1 - 15/16"	2 lb.
BKD1500B	1 - 1/2" Die	1 - 15/16"	2 lb.
BKP2000B	2" Punch	2 - 3/8"	2 lb.
BKD2000B	2" Die	2 - 3/8"	2 lb.
BKW52	Hand Ratchet Wrench	-	1 lb.
BKSB50B	1/2" Bearing & Drive Screw	-	1 lb.
BKS752B	3/4" - 2" Bearing & Drive Screw	-	1 lb.
BK88007	Storage Case	-	1.5 lb.

BKOR520

QUICK HAND RATCHET KNOCKOUT SET

For 1/2" - 2" Conduit

The BURNDY® Hand Ratchet Knockout Set is designed to punch holes for 1/2" – 2" conduit in distribution boxes, electrical panels and troughs.

The Hand Ratchet Knockout Set is provided with a 1-year limited warranty.

Features and Benefits

- Four-point design allows slug to drop automatically without splitting
- Smooth operating ratchet handles up to 10-gauge mild steel or 12-gauge stainless steel
- 1-year limited warranty

BKOR520 SPECIFICATIONS

Description	Weight
1/2" - 2" Quick Hand Ratchet Knockout Set	16 lbs

ACCESSORIES

Components for kit listed above can be purchased separately.

SET INCLUDES

Catalog Number	Description	Hole	Weight
BKP500B	1/2" Punch	7/8"	0.4 lb.
BKD500B	1/2" Die	7/8"	1 lb.
BKP750B	3/4" Punch	1-3/32"	0.4 lb.
BKD750B	3/4" Die	1-3/32"	1 lb.
BKP1000B	1" Punch	1-11/32"	1 lb.
BKD1000B	1" Die	1-11/32"	1 lb.
BKP1250B	1-1/4" Punch	1-11/16"	2 lb.
BKD1250B	1-1/4" Die	1-11/16"	2 lb.
BKP1500B	1-1/2" Punch	1-15/16"	2 lb.
BKD1500B	1-1/2" Die	1-15/16"	2 lb.
BKP2000B	2" Punch	2-3/8"	2 lb.
BKD2000B	2" Die	2-3/8"	2 lb.
BKOR14	Ratchet	—	12 lb.
BKOR50	1/2" Screw Adapter	—	0.4 lb.
BKOR75125	3/4"- 1-1/4" Screw Adapter	—	1 lb.
BKOR152	1-1/2" - 2" Screw Adapter	—	1 lb.
BK88020	Metal Storage Case	—	4 lb.

BKOS5290

SELF-CONTAINED HYDRAULIC 360° KNOCKOUT SET

For 1/2" – 2" Conduit

The BURNDY® Self-Contained 360° Knockout Set is designed to punch holes for 1/2" – 2" conduit in distribution boxes, electrical panels and troughs.

The self-contained 360° Knockout Set is provided with a 1-year limited warranty.

Features and Benefits

- Right-angle head swivels 360° for flexible punching in tight work spaces
- Punches up to 2" conduit sizes, up to 10-gauge mild steel or 12-gauge stainless steel
- No cumbersome "spacers" required
- Compact, lightweight size: 7-1/2 pounds and 13" in length
- Operating pressure rated at 10,000 psi
- Set includes the most popular drawstuds, punches, and dies for punching holes for 1/2" to 2" conduit; all packed in a sturdy storage case
- 1-year limited warranty

BKOS5290 SPECIFICATIONS

Description	Weight
1/2" - 2" Self-Contained Hydraulic Knockout Set - head swivels 360°	7-1/2 lbs

ACCESSORIES

Components for kit listed above can be purchased separately.

BKLP6K1	Seal Repair Kit

SET INCLUDES

Catalog Number	Description	Hole	Weight
BKP500B	1/2" Punch	7/8"	0.4 lb.
BKD500B	1/2" Die	7/8"	1 lb.
BKP750B	3/4" Punch	1-3/32"	0.4 lb.
BKD750B	3/4" Die	1-3/32"	1 lb.
BKP1000B	1" Punch	1-11/32"	1 lb.
BKD1000B	1" Die	1-11/32"	1 lb.
BKP1250B	1-1/4" Punch	1-11/16"	2 lb.
BKD1250B	1-1/4" Die	1-11/16"	2 lb.
BKP1500B	1-1/2" Punch	1-15/16"	2 lb.
BKD1500B	1-1/2" Die	1-15/16"	2 lb.
BKP2000B	2" Punch	2-3/8"	2 lb.
BKD2000B	2" Die	2-3/8"	2 lb.
BKLP6	Hydraulic Driver	—	10 lb.
BKPR7520	Drawstud	—	1 lb.
BKPS50	Drawstud	—	0.2 lb.
BKSA50	Drawstud Adapter	—	0.3 lb.

BKOS520

SELF-CONTAINED HYDRAULIC KNOCKOUT SET

For 1/2" – 2" Conduit

The BURNDY® Self-Contained Hydraulic Knockout Set is designed to punch holes for 1/2" – 2" conduit in distribution boxes, electrical panels and troughs.

The Self-Contained Hydraulic Knockout Set is provided with a 1-year limited warranty.

Optional 2-1/2" and 3" punch and die available.

BKOS520 SPECIFICATIONS

Description	Weight
1/2" - 2" Self-Contained Hydraulic Set	14 lbs

Features and Benefits

- Hydraulic driver punches up to 10-gauge mild steel or 12-gauge stainless steel
- Four-point design allows slug to drop automatically without splitting
- Lightweight and easy to use
- Hydraulic driver operates in any position
- 1-year limited warranty

SET INCLUDES

Catalog Number	Description	Hole	Weight
BKP500B	1/2" Punch	7/8"	0.4 lb.
BKD500B	1/2" Die	7/8"	1 lb.
BKP750B	3/4" Punch	1-3/32"	0.4 lb.
BKD750B	3/4" Die	1-3/32"	1 lb.
BKP1000B	1" Punch	1-11/32"	1 lb.
BKD1000B	1" Die	1-11/32"	1 lb.
BKP1250B	1-1/4" Punch	1-11/16"	2 lb.
BKD1250B	1-1/4" Die	1-11/16"	2 lb.
BKP1500B	1-1/2" Punch	1-15/16"	2 lb.
BKD1500B	1-1/2" Die	1-15/16"	2 lb.
BKP2000B	2" Punch	2-3/8"	2 lb.
BKD2000B	2" Die	2-3/8"	2 lb.
BKLP2	Hydraulic Driver	—	10 lb.
BKPR7520	Drawstud	—	1 lb.
BKPS50	Drawstud	—	0.2 lb.
BKSA50	Drawstud Adapter	—	0.3 lb.
BK88020	Metal Storage Case	—	4.1lb.

ACCESSORIES

Components for the kit listed above can be purchased separately. Additional accessories, not included in kit, are listed below.

Catalog Number	Description	Hole	Weight
BKP2500	2-1/2" Punch	2-7/8"	3 lb.
BKD2500	2-1/2" Die	2-7/8"	3 lb.
BKP3000	3" Punch	3-1/2"	4 lb.
BKD3000	3" Die	3-1/2"	4 lb.
BKLP2K1	Seal Repair Kit	—	—

BKOH520A

HYDRAULIC KNOCKOUT SET

For 1/2" - 2" Conduit

The BURNDY® Hydraulic Knockout Set is designed to punch holes for 1/2" – 2" conduit in distribution boxes, electrical panels and troughs. Provided with hand pump.

The Hydraulic Knockout Set is provided with a 1-year limited warranty.

BKOH520A SPECIFICATIONS

Description	Weight
1/2" - 2" Hydrualic Knockout Set with BPH2 Hand Pump	31 lbs

Features and Benefits

- Four-point design allows slug to drop automatically without splitting
- Punches up to 10-gauge mild steel or 12-gauge stainless steel
- Hand-powered hydraulic pump
- Assortment of punches, dies and accessories
- Includes metal storage case (11-1/8" x 18-3/4" x 6-1/4")
- Competitor's punches and dies are interchangeable
- 1-year limited warranty

BKOH520A SET INCLUDES

Catalog Number	Description	Hole	Weight
BKP500B	1/2" Punch	7/8"	0.4 lb.
BKD500B	1/2" Die	7/8"	1 lb.
BKP750B	3/4" Punch	1-3/32"	0.4 lb.
BKD750B	3/4" Die	1-3/32"	1 lb.
BKP1000B	1" Punch	1-11/32"	1 lb.
BKD1000B	1" Die	1-11/32"	1 lb.
BKP1250B	1-1/4" Punch	1-11/16"	2 lb.
BKD1250B	1-1/4" Die	1-11/16"	2 lb.
BKP1500B	1-1/2" Punch	1-15/16"	2 lb.
BKD1500B	1-1/2" Die	1-15/16"	2 lb.
BKP2000B	2" Punch	2-3/8"	2 lb.
BKD2000B	2" Die	2-3/8"	2 lb.
BPH20	Hand Pump — 2 speed	—	5 lb.
BKPR7540	Drawstud for 3/4" - 4" Punches & Dies	—	2.5 lb.
BKPS50*	Stainless Steel Drawstud, 3/8" dia.	—	0.2 lb.
BKC3540**	Converter	—	0.4 lb.
BCH1211	12-ton Hydraulic Cylinder	—	0.6 lb.
BH864	6' Rubber Hose Coupler		2 lb.
BCM5	Metal Case	—	11 lb.

* Must be used with 1/2″ punch and die.
**Must be used with 3-1/2″– 4″ punch and die.

ACCESSORIES

Components for kit listed above can be purchased separately.

BKOH540A

HYDRAULIC KNOCKOUT SET

For 1/2" – 4" Conduit

The BURNDY® Hydraulic Knockout Set is designed to punch holes for 1/2" – 4" conduit in distribution boxes, electrical panels and troughs. Provided with hand pump.

The Hydraulic Knockout Set is provided with a 1-year limited warranty.

BKOH540A SPECIFICATIONS

Description	Weight
1/2" - 4" Hydraulic Knockout Set with BPH20 Hand Pump	50 lbs

Features and Benefits

- Four-point design allows slug to drop automatically without splitting
- Punches up to 10-gauge mild steel or 12-gauge stainless steel
- Hand–powered hydraulic pump
- Assortment of punches, dies and accessories
- Includes metal storage case (11-1/8" x 18-3/4" x 6-1/4")
- Competitor's punches and dies are interchangeable
- 1-year limited warranty

SET INCLUDES

Catalog Number	Description	Hole	Weight
BKP500B	1/2" Punch	7/8"	0.4 lb.
BKD500B	1/2" Die	7/8"	1 lb.
BKP750B	3/4" Punch	1 - 3/32"	0.4 lb.
BKD750B	3/4" Die	1 - 3/32"	1 lb.
BKP1000B	1" Punch	1 - 11/32"	1 lb.
BKD1000B	1" Die	1 - 11/32"	1 lb.
BKP1250B	1 - 1/4" Punch	1 - 11/16"	2 lb.
BKD1250B	1 - 1/4" Die	1 - 11/16"	2 lb.
BKP1500B	1 - 1/2" Punch	1 - 15/16"	2 lb.
BKD1500B	1 - 1/2" Die	1 - 15/16"	2 lb.
BKP2000B	2" Punch	2 - 3/8"	2 lb.
BKD2000B	2" Die	2 - 3/8"	2 lb.
BKP2500	2"- 1/2" Punch	2 - 7/8"	3 lb.
BKD2500	2"- 1/2" Die	2 - 7/8"	3 lb.
BKP3000	3" Punch	3 - 1/2"	4 lb.
BKD3000	3" Die	3 - 1/2"	4 lb.
BKP3500	3"- 1/2" Punch	4"	4 lb.
BKD3500	3"- 1/2" Die	4"	4 lb.
BKP4000	4" Punch	4 - 1/2"	4 lb.
BKD4000	4" Die	4 - 1/2"	4 lb.
BPH20	Hand Pump - 2 speed	-	5 lb.
BKPR7540	Drawstud for 3/4" - 4" Punches & Dies	-	2.5 lb.
BKPS50*	Stainless steel Drawstud, 3/4" dia.	-	0.2 lb.
BKC3540**	Converter	-	0.4 lb.
BCH1211	12 - ton Hydraulic Cylinder	-	0.6 lb.
BH864	6' Rubber Hose Coupler	-	2 lb.
BCM5	Metal Case	-	11 lb.

* Must be used with 1/2" punch and die.
** Must be used with 3-1/2" - 4" punch and die.

ACCESSORIES

Components for the kit listed above can be purchased separately.

BKOF540

HYDRAULIC KNOCKOUT SET

For 1/2" – 4" Conduit

The BURNDY® Hydraulic Knockout Set is designed to punch holes for 1/2" – 4" conduit in distribution boxes, electrical panels and troughs. Provided with foot pump.

The Hydraulic Knockout Set is provided with a 1-year limited warranty.

BKOF540 SPECIFICATIONS

Description	Weight
1/2" - 4" Hydraulic Knockout Set with BPF65 Foot Pump	50 lbs

Features and Benefits

- Four-point design allows slug to drop automatically without splitting
- Punches up to 10-gauge mild steel or 12-gauge stainless steel
- Foot–powered hydraulic pump
- Assortment of punches, dies and accessories
- Includes metal storage case (11-1/8" x 18-3/4" x 6-1/4")
- Competitor's punches and dies are interchangeable
- 1-year limited warranty

SET INCLUDES

Catalog Number	Description	Hole	Weight
BKP500B	1/2" Punch	7/8"	0.4 lb.
BKD500B	1/2" Die	7/8"	1 lb.
BKP750B	3/4" Punch	1 - 3/32"	0.4 lb.
BKD750B	3/4" Die	1 - 3/32"	1 lb.
BKP1000B	1" Punch	1 - 11/32"	1 lb.
BKD1000B	1" Die	1 - 11/32"	1 lb.
BKP1250B	1 - 1/4" Punch	1 - 11/16"	2 lb.
BKD1250B	1 - 1/4" Die	1 - 11/16"	2 lb.
BKP1500B	1 - 1/2" Punch	1 - 15/16"	2 lb.
BKD1500B	1 - 1/2" Die	1 - 15/16"	2 lb.
BKP2000B	2" Punch	2 - 3/8"	2 lb.
BKD2000B	2" Die	2 - 3/8"	2 lb.
BKP2500	2"- 1/2" Punch	2 - 7/8"	3 lb.
BKD2500	2"- 1/2" Die	2 - 7/8"	3 lb.
BKP3000	3" Punch	3 - 1/2"	4 lb.
BKD3000	3" Die	3 - 1/2"	4 lb.
BKP3500	3"- 1/2" Punch	4"	4 lb.
BKD3500	3"- 1/2" Die	4"	4 lb.
BKP4000	4" Punch	4 - 1/2"	4 lb.
BKD4000	4" Die	4 - 1/2"	4 lb.
BPF65	Foot Pump - 2 speed	-	5 lb.
BKPR7540	Drawstud for 3/4" - 4" Punches & Dies	-	2.5 lb.
BKPS50*	Stainless steel Drawstud, 3/4" dia.	-	0.2 lb.
BKC3540**	Converter	-	0.4 lb.
BCH1211	12 - ton Hydraulic Cylinder	-	0.6 lb.
BH864	6' Rubber Hose Coupler	-	2 lb.
BCM5	Metal Case	-	11 lb.

* Must be used with 1/2″ punch and die.
** Must be used with 3-1/2″ - 4″ punch and die.

ACCESSORIES

Components for the kit listed above can be purchased separately.

B12E, B34E12R, B1E34R

CONDUIT HAND BENDERS

The BURNDY® Aluminum Hand Bender is designed to bend EMT and Rigid conduit. The size range is 1/2"- 1" EMT.

The conduit hand bender is provided with a 5-year limited warranty.

B12E

B1E34R

B34E12R

Features and Benefits

- All models include embossment with sight lines for 10º, 22º, 30º, 45º, 60º and 90º
- Industry standard markings — 30º bend when handle is straight up
- The non-slip foot pedal is contoured allowing more foot room
- 3/4" and 1" bender heads have levels which makes aligning easy
- Designed with a channel to bend conduit back if you have an over-bend
- 5-year limited warranty

Handles

Bender Part Number	Description	Weight
B12E	1/2" EMT (bender head only)	0.90 lbs
B34E12R	3/4" EMT - 1/2" RIGID (bender head only)	1.80 lbs
B1E34R	1" EMT - 3/4" RIGID (bender head only)	3.55 lbs
Bender Part Number	**Description**	**Weight**
H12E	Handle for 1/2" bender	3.65 lbs
H34E12R	Handle for 3/4" bender	3.65 lbs
H1E34R	Handle for 1" bender	5.45 lbs
Bender Part Number	**Description**	**Weight**
BHA12E	1/2" EMT bender with handle	4.55 lbs
BHA34E12R	3/4" EMT - 1/2" RIGID bender with handle	5.45 lbs
BHA1E34R	1" EMT - 3/4" RIGID bender with handle	9 lbs

BEB122

ELECTRIC CONDUIT BENDER

For 1/2" - 2" Conduit and Pipe

The BURNDY® BEB122 electric conduit bender is designed to bend 1/2" - 2" rigid conduit, IMC, EMT and 2" PVC coated conduit. The BEB122 bender assists the electrical contractor on larger jobs and will save time and labor.

The BEB122 electrical bender is provided with a 2-year limited warranty.

ACCESSORIES

Part Number	Description	Weight
BEBSHOECASE	Metal storage box	36 lbs

Features and Benefits

- The electric bender is available for Rigid, EMT, IMC or PVC. Bender can also be purchased without shoes
- Shoes and roller supports interchange with the Gardner Bender® GB2555, Greenlee® 555 and Current Tools® 77 series (Only exception is using the Greenlee® four groove rigid shoe #00571, you must use roller support #00936)
- Reliable electrical system that offers ease of repairs (does not contain any circuit boards)
- Proudly "Made in the USA"
- Maximum schedule 40 conduit
- Will produce 180 degree bends in a single cycle
- Limit stop control for bend angle settings
- Operates on 115-120VAC 60Hz
- Built in bend angle protractor bends 90 degrees quickly and efficiently
- 2-year limited warranty

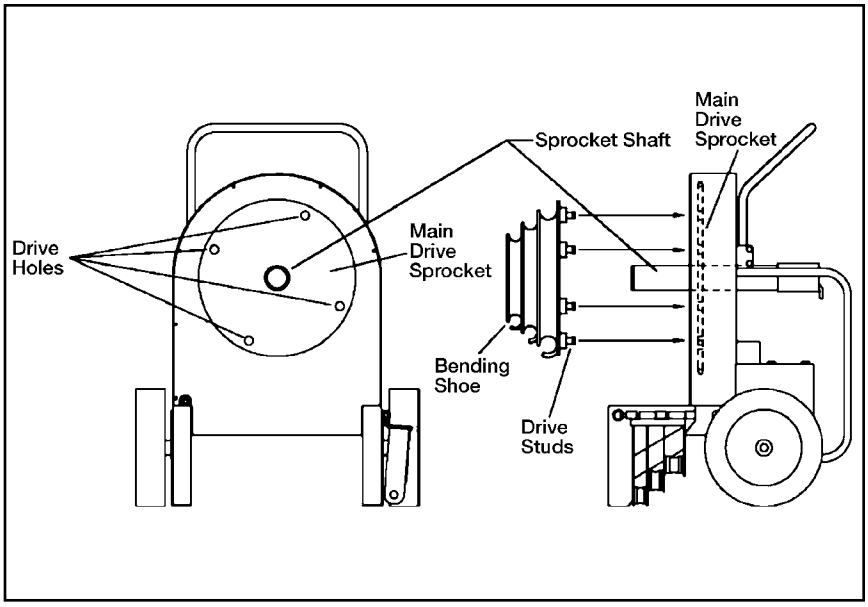

Part Number	Description	Weight
BEB122	Electric Bender Power Unit only, without shoes and roller supports	270 lbs
BEB122RIG	Electric Bender with shoes and roller supports for 1/2" through 2" RIGID conduit schedule 40 pipe and 1/2" through 1-1/4" IMC conduit	365 lbs
BEB122EMT*	Electric Bender with shoes and roller supports for 1/2" through 2" EMT conduit	430 lbs
BEB122PVC*	Electric Bender with shoes and roller supports for 1/2" through 2" PVC coated RIGID conduit	365 lbs
122RIG	Shoes and roller supports only, for bending 1/2" thru 2 RIGID conduit, 1/2" through 1-1/4" IMC conduit and 1/2" through 2" Schedule 40 pipe	74 lbs
122EMT*	Shoes and roller supports only, for bending 1/2" through 2" EMT (thinwall)	160 lbs
122IMC*	Shoes and roller supports only, for bending 1-1/2" and 2" IMC	127 lbs
122PVC*	Shoes and roller supports only, for bending 1/2" through 2" 40 mil PVC coated RIGID	110 lbs

* Shoes and roller supports come with BEBSHOECASE metal box

BSC2H

The SmartCart®

2-Wheel Heavy Duty Cart

The SmartCart® is a versatile wire management system consisting of 2 wheeled carts, various modular wire racks for carrying spools of wire and wall storage units to organize and store racks with wire when not in use. The SmartCart® wire management system will assist the electrical contractor with wire installations, improves wire storage, and saves time and labor.

Heavy duty carts are rated for 600 lbs capacity. The SmartCart® is provided with a 1-year limited warranty.

Features and Benefits

- Order as standard configuration or customize to your needs with various size racks
- Two holders provided for up to 1" conduit benders
- Built-in tray to hold fish tapes and tools
- Handles are pre-dimpled for mounting material tool boxes (MTB and MTX)
- Cart base plate is pre-punched to accommodate mounting of the extension base plate with built-in wire guide
- Spools are easily changed by placing rack on its side, removing hitch pin and shaft, roll-out and roll-in desired new spool
- Motionless vise attached to the back of cart for cutting 1/2", 3/4" and 1" conduit

ACCESSORIES

EBP	Extension Base Plate with built-in wire guide
MTB	Material Tool Box 11" L X 6" W X 5" D
MTX	Material Tool Box (MTB) with Dividers 6-Pockets: 3-5/8" L X 3" W X 3" D
R17A	17" wide rack for 7-1/2" diameter spools with 1/2" EMT spindles
R22B	22" wide rack for 7-1/2" diameter spools with 1/2" EMT spindles
R17C*	17" wide rack for 12" diameter spools with 1" EMT spindles
R25D*	25" wide rack for 12" diameter spools with 1" EMT spindles
R24F*	24" wide rack for 2-16" diameter reels with 1" EMT spindles
BSCWS40	40" Wall Wire Reel Storage System
BSCWS80	80" Wall Wire Reel Storage System

BSC2H

BSC2HA1B1FEBP

Catalog Number	Description	Weight
BSC2H	2-Wheel Heavy Duty without racks	37 lbs
BSC2H5A	2-Wheel Heavy Duty with (5) R17A racks	62 lbs
BSC2H3A2B	2-Wheel Heavy Duty with (3) R17A racks and (2) R22B racks	64 lbs
BSC2H5B	2-Wheel Heavy Duty with (5) R22B racks	67 lbs
BSC2H1C2DEBP	2-Wheel Heavy Duty with (1) R17C rack, (2) R25D racks and (1) EBP	86 lbs
BSC2H2C1DEBP	2-Wheel Heavy Duty with (2) R17C racks, (1) R25D rack and (1) EBP	82 lbs
BSC2H2A1B1FEBP	2-Wheel Heavy Duty with (2) R17A racks (1) R22B rack (1) R24F rack and (1) EBP	81 lbs

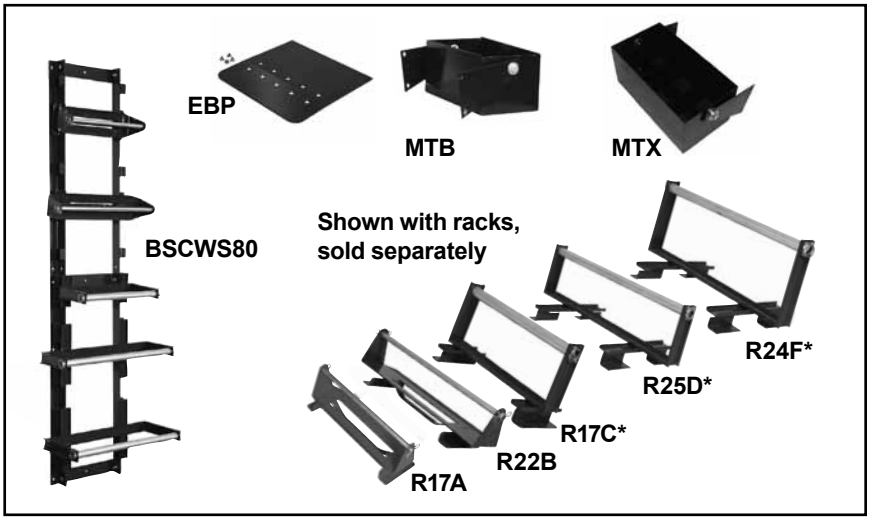

*Note: The R17C, R25D, and R24F racks are designed for oversized reels. The Extension Base Plate (EBP) is required when used on The SmartCart®.

BSC2L

The SmartCart®

2-Wheel Light Duty Cart

The SmartCart® is a versatile wire management system consisting of 2 wheeled carts, various modular wire racks for carrying spools of wire and wall storage units to organize and store racks with wire when not in use. The SmartCart® wire management system will assist the electrical contractor with wire installations, improves wire storage, and saves time and labor.

Light duty carts are rated for 300 lbs capacity.

The SmartCart® is provided with a 1-year limited warranty.

BSC2L

BSC2L3A2B

Features and Benefits

- Order as standard configuration or customize to your needs with various size racks
- Two holders provided for up to 1" conduit benders
- Built-in tray to hold fish tapes and tools
- Handles are pre-dimpled for mounting material tool boxes (MTB and MTX)
- Cart base plate is pre-punched to accommodate mounting of the extension base plate with built-in wire guide
- Spools are easily changed by placing rack on its side, removing hitch pin and shaft, roll-out and roll-in desired new spool
- Motionless vise attached to the back of cart for cutting 1/2", 3/4" and 1" conduit

Catalog Number	Description	Weight
BSC2L	2-Wheel Light Duty without racks	37 lbs
BSC2L5A	2-Wheel Light Duty with (5) R17A racks	62 lbs
BSC2L3A2B	2-Wheel Light Duty with (3) R17A racks and (2) R22B racks	64 lbs
BSC2L5B	2-Wheel Light Duty with (5) R22B racks	67 lbs
BSC2L1C2DEBP	2-Wheel Light Duty with (1) R17C rack, (2) R25D racks and (1) EBP	86 lbs
BSC2L2C1DEBP	2-Wheel Light Duty with (2) R17C racks, (1) R25D rack and (1) EBP	82 lbs

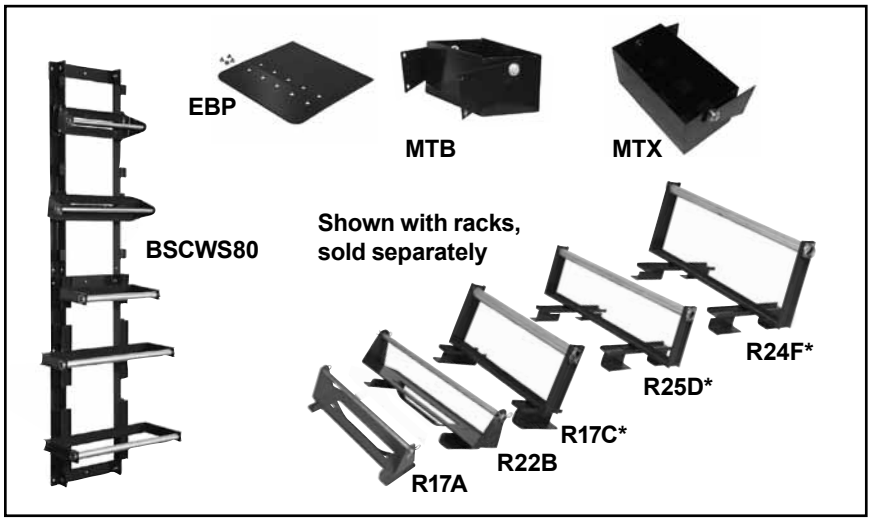

*Note: The R17C, R25D, and R24F racks are designed for oversized reels. The Extension Base Plate (EBP) is required when used on The SmartCart®.

ACCESSORIES

EBP	Extension Base Plate with built-in wire guide
MTB	Material Tool Box 11" L X 6" W X 5" D
MTX	Material Tool Box (MTB) with Dividers 6-Pockets: 3-5/8" L X 3" W X 3" D
R17A	17" wide rack for 7-1/2" diameter spools with 1/2" EMT spindles
R22B	22" wide rack for 7-1/2" diameter spools with 1/2" EMT spindles
R17C*	17" wide rack for 12" diameter spools with 1" EMT spindles
R25D*	25" wide rack for 12" diameter spools with 1" EMT spindles
R24F*	24" wide rack for 2-16" diameter reels with 1" EMT spindles
BSCWS40	40" Wall Wire Reel Storage System
BSCWS80	80" Wall Wire Reel Storage System

BSCWS40 AND BSCWS80

The SmartCart®

Wall Wire Reel Storage System

The BSCWS40, 40" high and BSCWS80, 80" high Wall Wire Reel Storage Systems are designed to work in a van, panel truck or shop and handles all 2 wheel SmartCart® racks.

Provides a time saving advantage by storing wire on racks which can be easily moved to 2 wheel carts for transporting and wire pulling.

Sizes:
- 40" high, 17" wide, 2-3/4" deep
- 80" high, 17" wide, 2-3/4" deep

The SmartCart® is provided with a 1-year limited warranty.

BSCWS80

Shown with racks, sold separately

BSCWS40

Shown with racks, sold separately

Modular Racks for 2 Wheel Carts

(sold separately)

R17A	17" wide rack for 7-1/2" diameter spools with 1/2" EMT spindles
R22B	22" wide rack for 7-1/2" diameter spools with 1/2" EMT spindles
R17C*	17" wide rack for 12" diameter spools with 1" EMT spindles
R25D*	25" wide rack for 12" diameter spools with 1" EMT spindles
R24F*	24" wide rack for 2-16" diameter reels with 1" EMT spindles

*Note: The R17C, R25D, and R24F racks are designed for oversized reels. The Extension Base Plate (EBP) is required when used on The SmartCart®.

TABLE OF CONTENTS

Introduction
Basic Connection Principles O-2 to O-5

Hardware Data
DURIUM™ Steel/Aluminum Tightening Torques O-6
DURIUM™ Hex Bolts Data O-6
UL Tightening Torque UL486 O-7, O-8
Recommended Clamping on Bolted Connectors O-9

Cable Data (Tables)
Copper Cable
Copper Tube O-10
Solid Copper Wire O-11
Compact Stranded Copper Cable O-11
Stranded Copper Cable O-12, O-13
Flexible Copper Stranded Cable O-14, O-15

Aluminum and ACSR Cable
Aluminum Tube O-16
Aluminum 1350 Cable Bare - Classes AA and A O-17
Aluminum 1350 Cable Bare - Class B O-18
ACSR Cable O-19
High Strength ACSR Cable O-20
Compact Aluminum 1350 Cable O-21
Aluminimum Alloy 5005 Cable O-22
Aluminum 6201 Cable O-22
Aluminum Alloy 8000 Series "O" Temper Cable O-23, O-24
Compact ACSR Cable O-25
ACSR/TW Cable (Trap Wire) O-25, O-26
AAC/TW Cable (All Aluminum Trap Wire) O-26
ACAR Cable O-27
SSAC Cable O-27, O-28

Steel Conductors
Copperweld Cable O-29
Copperweld - Copper Cable O-29, O-30
Galvanized Steel Cable O-31
Aluminum Coated Steel Cable O-32

Terminal Stud Size Chart O-32

AWG vs. Metric Wire Sizes O-33, O-34

Inches - Millimeters Conversion Chart O-35

BURNDY Conductor Numbering System O-36, O-37

Present Installation Tool Index O-38 to O-48

Color Coding for Overhead Conectors O-49

Color Coding for AL/CU Connectors O-49

Color Coding for Copper Lugs and Splices O-50

Product/Trade Name Index O-51

Alpha-Numeric Index O-52 to O-99

Introduction - Basic Electrical Connection Principles:

Basic Factors:

The basic factors which influence the design and performance of pressure wire connections are as follows:

1. Creep
2. Surface Oxide
3. Corrosion

A fourth factor, known as thermal effects, is also a consideration, but due to the technical nature and length of this topic, it will not be discussed in this publication.

At the outset it should be pointed out that these factors give rise to much more difficult problems in connections involving aluminum conductors than those encountered in copper to copper connections.

Creep (Cold Flow)

Creep is the cold flow of the metal under pressure and it continues until the pressure reduces to a value at which any further creep is negligible. Creep properties depend on the particular metal or alloy and on its hardness; alloys having less creep than pure metals, and harder metals have less creep than soft metals. In a typical connection, the conductors are generally of pure metal and often of soft temper and therefore, subject to considerable creep. In addition, the condition is further exaggerated when aluminum is the conductor as compared to copper, since its creep rate is many times that of copper.

Effect of Creep: Figure 2 shows typical curves of total contact resistance plotted against total contact force. Curve A shows how the contact resistance continually decreases with increasing contact force. When the full contact force F1 is reached, the contact resistance reaches the low value of R1. In general, the full tightening force on a connector greatly exceeds the maximum force for which there is no appreciable creep. Therefore, the force will gradually settle down to a value after which there will be no further significant creep. Fortunately, however, the resistance does not climb back up along curve A, the tightening curve, but instead it follows a new curve B, the relaxing curve, along which the resistance changes very little until the force relaxes to a value such as F2.

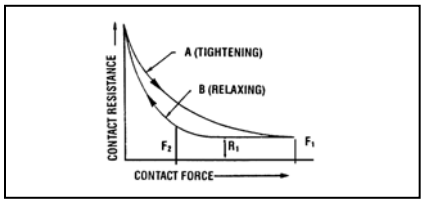

Figure 2

Admittedly, the point of "no appreciable creep" is difficult to define. For pure metals, especially in the soft state, there is always some creep, even at very low pressures at room temperature. However, we do know that the pressure required to produce the same creep rate is several times greater for copper than for aluminum. Thus, to permit the same contact force F2 for aluminum and copper, the contact area A required for aluminum can be expected to be considerably greater than that required for copper. This explains why the contact areas for connectors for aluminum must be considerably greater than for copper and why many light duty connectors for copper are entirely inadequate for aluminum, even when specially plated and when recommended compounds are used on the contact surfaces.

Relaxation: Relaxation of pressure due to creep, or for any other reason, would be a much more difficult factor in a pressure connection were it not for the relationship of contact pressure to contact resistance on the relaxation curve as shown in Figure 2. It is frequently observed that some time after the bolts of a clamp type connector are tightened, the bolt tensions are relaxed appreciably. The question arises as to whether it is necessary to retighten the bolts to the original torque value. In a properly designed connector, retightening is unnecessary since the contact resistance should increase very little due to the relaxation of pressure, as shown by the relaxation curve of Figure 2.

This fact is largely responsible for the successful operation of a compression connector. The application of the compression tool applies very high pressure, establishing very low contact resistance. The removal of the compression tool releases a very large proportion of this pressure, and creep further relaxes this pressure. Fortunately, the contact resistance increases very little due to this pressure relaxation.

Contact Force: The previous analysis shows that the total contact force largely determines the contact resistance. Thus, to achieve the desired low value of contact resistance, the proper size and number of bolts in a clamp type connector must be supplied, and the compression tool must apply the proper force to a compression connector. In addition, the connector must be designed with sufficient structural strength, contact area, and resilience, to assure that the contact force cannot relax beyond the point where contact resistance begins to rise appreciably, as shown in Figure 2.

Surface Oxide

The contact of pure metallic surfaces cannot be assured in practical connections. Surface contamination must be expected, especially surface oxidation. These surface films are insulators as far as contact resistance is concerned, and they must be broken to achieve metal to metal contact to make an adequate electrical connection. The difficulty of breaking the film depends on the nature of the film, its thickness, and the metal on which it is formed.

Copper oxide is generally broken down by reasonably low values of contact pressure. Unless the copper is badly oxidized, good contact can be obtained with very little or no cleaning.

Silver oxide is even more easily broken down by the contact pressure; and since silver oxide forms less readily at elevated temperatures, silver contact surfaces are preferred over copper when used for high temperatures. For this reason, it is considered good practice to silver plate copper contact surfaces that must operate at temperatures over 200˚ C.

On the other hand, aluminum oxide is a hard, tenacious, high resistance film that forms very rapidly on the surface of aluminum exposed to air. In fact, it is the toughness of this film that gives aluminum its good corrosion resistance. The oxide film that forms after more than a few hours is too thick and tough to permit a low resistance contact without cleaning. The aluminum oxide film is transparent so that even the bright and clean appearance of an aluminum connector is no assurance that the low contact resistance can be attained without cleaning.

In addition to the necessity for cleaning the oxide from aluminum, the surface should be covered with a good connector compound to prevent the oxide from reforming. Common practice is to clean the surface with a wire brush or emery cloth. The compound should be applied immediately after cleaning, or the compound should be put on first and the surface scraped through the compound. Present practice is to scratch brush dry and to apply the compound immediately thereafter. This allows a more thorough job of cleaning the conductor.

Contact Compounds: Petrolatum or No-Oxid are good contact surface compounds for aluminum, but BURNDY® PENETROX™ A, a petroleum type compound containing zinc dust, has the additional advantage of assisting in the

Introduction - Basic Electrical Connection Principles: (continued)

breaking down of the contact resistance. How this is accomplished is not certain, but it appears that the zinc particles of PENETROX™ A probably act as current bridges in the breaks in the oxide film. For more complete information about the PENETROX™ line of compounds, refer to the Accessories section of this catalog.

Interstrand Resistance: The high contact resistance due to the oxide on the strands of an aluminum cable may be responsible for a poor distribution of current among the strands on the cable. Thus, the outer strands may carry much more than their share of the current and overheating of the cable may result. Tests have shown that even on new cable this effect of interstrand resistance can be considerable unless a good contact compound is used. The clamping action tends to break down the oxide and force the compound between the strands. This is particularly true of compression connectors due to the very high unit pressures developed.

The most effective way to break down interstrand resistance of aluminum cable is to use compression connectors filled with a compound having zinc particles. Then, when the end of the cable is inserted in the connector, the compound is forced between the strands where it very effectively breaks down the interstrand resistance upon applicaton of the compressive force.

Plating Aluminum: Plating the contact surfaces of aluminum connectors will prevent the formation of aluminum oxide. Electro-tin, cadmium and zinc platings have been used for this purpose. However, the use of a plated aluminum conductor, does not make it less necessary to scratch brush the aluminum conductor, nor does it reduce the need for a good contact compound. Additional problems are introduced due to the plating on aluminum which render it of very doubtful value over the proper use of base aluminum. This will be more fully discussed later.

Corrosion

The electrical conductivity and mechanical strength of an electrical connection must remain stable under the deteriorating influences of the environment. This deterioration is corrosion. It is the electrolytic action of moisture and other elements of the atmosphere in conjunction with the metals of the connection. If the conductors and connectors are of copper or a corrosion resistant copper alloy, corrosion is usually a minor factor. However, it is a very vital factor if aluminum is involved.

If moisture can be kept away from the connection, corrosion will not be a factor. The electrical connection of a high voltage splice on insulated cable is generally free from corrosion since the taping may be used to avoid corrosion on bare cable, provided it excludes moisture. It is difficult to get a good tape seal to the conductor itself, especially on stranded cable. If moisture does penetrate the taping, it will not dry out as readily as if the joint were untaped. Various plastic materials are available today for covering low voltage connections or for bare conductor connections on high voltage. Unless such coverings are completely moisture-proof, it is better to rely on installation with a good contact compound, using a connector designed to resist corrosion.

Galvanic Action: Whenever dissimilar metals are in the presence of an electrolyte, a difference in electric potential is developed. One metal becomes the cathode and receives a positive charge. The other becomes the anode and receives a negative charge. When these metals are in contact, an electrical current will flow, as in the case of any short-circuited electric cell. This electrolytic action causes an attack of the anodic metal, leaving the cathodic metal unharmed. The extent of the attack is proportional to the strength of the electrolytic current, which in turn is proportional to the electric potential difference developed.

The magnitude of the potential difference generated between two dissimilar metals can be seen by the position of these metals in the electrolytic series. Figure 3 is such a series. When two metals are in contact in an electrolyte, the one higher up in this series is the anode, the corroded metal, while the one lower is the cathode, the protected metal. The further apart the metals are in this series, the greater the electrolytic potential difference, and the greater the attack to the anodic metal.
Note that copper and aluminum are quite far apart in the series, copper being cathodic and aluminum anodic. Hence, when aluminum and copper are in contact in an electrolyte, the aluminum can be expected to be severely attacked.

Crevice Corrosion: Electrolytic attack can also occur between like metals due to a phenomenon known as oxygen concentration cell or crevice corrosion. Since oxygen is necessary for corrosive action, a variation in the concentration of oxygen where a metal is exposed to an electrolyte will generate a difference of potential, and cause a corrosive attack in the oxygen starved area. Thus, since an electrolyte in a deep crevice is freely exposed to the air at the outside, the concentration of oxygen will be greatest at the mouth of the crevice. Then corrosion can be expected to occur in the crevice remote from the surface. Crevice corrosion can be prevented if the crevice is filled with a compound to exclude moisture. Thus, within the contact groove of an aluminum connector containing an aluminum conductor, there will be numerous crevices in which corrosion will take place unless a good connector compound is applied during installation. Copper, being a more noble metal, appears to be much less subject to crevice corrosion.

Corrosion Testing: The effectiveness of an electrical connection to resist corrosion can be tested in the laboratory under conditions designed to greatly accelerate the natural corrosive conditions of actual service. The most widely accepted means is the standard salt spray chamber. In this chamber the specimens are placed in a salt fog made by atomizing a 20% salt solution at 100˚ F.

BURNDY, as well as other manufacturers and utility companies, have done a great deal of testing and a considerable area of agreement has been reached. There are, however, minor differences in recommended practices. The problem is concerned with aluminum and aluminum to copper connections since the effect of corrosion on copper to copper connections is far less serious. Let us study the recommended practices.

Aluminum to Aluminum Connections: For joining aluminum to aluminum conductors, there is little disagreement that an aluminum bodied connector is the proper choice, since this obviously elimates the galvanic corrosion of dissimilar metals. However, even in this case, care must be taken to prevent crevice corrosion and to select an alloy of aluminum for the connector body that is free from cracking due to stress corrosion.

Aluminum to Copper Connections: Similarly, for joining aluminum to copper conductors, an aluminum bodied connector is the best choice since it prevents galvanic corrosion of the aluminum conductor, the most vulnerable element to attack in the connection. Realizing this, BURNDY initiated a research program aimed at finding the best way to make an aluminum

Introduction - Basic Electrical Connection Principles: (continued)

+ LESS NOBLE (ANODIC)

Magnesium
Magnesium alloys
Zinc
Aluminum 1100
Cadmium
Aluminum 2024-T4
Steel or Iron
Cast Iron
Chromium Iron (Active)
Ni-Resist
Type 304 Stainless (Active)
Type 316 Stainless (Active)
Lead Tin Solders
Lead
Tin
Nickel (Active)
Inconel
Brasses
Copper
Bronzes
Copper-Nickel alloys
Monel
Silver Solder
Nickel (Passive)
Inconel (Passive)
Chromium-Iron (Passive)
Type 304 Stainless (Passive)
Type 316 Stainless (Passive)
Silver
Titanium
Graphite
Gold
Platinum

— MORE NOBLE (CATHODIC)

Figure 3

connector suitable for joining aluminum to copper conductors.

This led to the evolution of the "Massive Anode Principle" of connector design for joining conductors of dissimilar metal. On the basis of this principle, properly designed, all-aluminum connectors became available for universal use in joining aluminum to aluminum or aluminum to copper conductors.

Massive Anode Principle: By making the aluminum connector massive in comparison to the copper conductor, when the copper conductor emerges from the connector, the electrolytic current density over the exposed face of the aluminum connector is greatly reduced. This is schematically represented in Figure 4. Since the rate of corrosion is directly related to the current density on the surface of the anodic material, the relatively large face of the aluminum connector will suffer only minor attack.

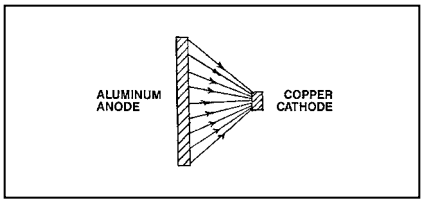

Figure 4

In addition, because the aluminum connector body is massive in the region where the corrosion occurs, the small loss of metal caused by corrosion is insignificant, even after long periods of service. Furthermore, the connector design should be such that clamping bolts, and areas of high stress which provide structural strength, are not in the regions subject to galvanic attack.

The effectiveness of this theory has been amply demonstrated in salt spray corrosion tests in which the connectors were subject to 1,000 hours in the salt spray fog with only minor corrosive pitting adjacent to the copper conductor, as seen in Figure 5. In addition, the aluminum conductor was completely protected, and the joint resistance remained virtually unchanged. The test involved a wide variety of sizes and types of connectors showing the effectiveness for small service connectors as well as large power connectors. Figure 6 shows a large all aluminum clamp type T connector installed on 3-1/2" diameter copper run and 750 kcmil aluminum tap. The figure shows this connector which was opened up after 1,400 hours of the salt spray test. Note that the contact surfaces are bright and clean and the only evidence is minor pitting along the faces adjacent to the copper.

*It should be empasized that a good compound should be used on the contact surfaces whether aluminum or copper is used in an aluminum connector.

Position of Conductor: A properly designed aluminum connector for joining aluminum to copper must provide adequate separation between the conductors to prevent electrolytic attack on the aluminum conductor. Even then, it is good practice to install
the aluminum conductor above the copper conductor if possible. This will prevent pitting of the aluminum conductor due to copper salts being washed over the aluminum.

Plated Aluminum Connectors: Plating has been used as a means to make an aluminum connector suitable for copper conductor. Such platings as copper, zinc, tin and cadmium have been used. The plating of aluminum is much more critical than plating a more noble metal such as copper. In addition, a preplate, usually of copper or brass, must be applied, thus introducing numerous metals and further possibilities for galvanic corrosion.

To be effective in reducing galvanic corrosion between the copper conductor and the aluminum connector, the plated metal must be closer in the Electrolytic Series to copper than is aluminum. It must therefore, be cathodic to aluminum. Since porosity and minor scratches are always present, galvanic action can be expected in the presence of moisture, resulting in attack of the aluminum under the plating. Corrosion tests reveal attack in the form of a mottled appearance and flaking of the plating.

In addition, the presence of plated metal can cause galvanic attack of the aluminum conductor, thus reducing the protection offered to this conductor in an aluminum connector.

Cleaning and the Use of Compound: It should be emphasized that when aluminum connectors or conductors are involved, proper cleaning of the aluminum and the use of a good connector compound, such as BURNDY PENETROX™ A, are essential for trouble-free service. BURNDY, as well as other manufacturers, provide the contact grooves with a coating to make it unnecessary to clean the connectors, but in all cases the aluminum conductor should be

Introduction - Basic Electrical Connection Principles: (continued)

cleaned by means such as scratch brushing, and immediately coated with the connector compound.

To simplify the application of the compound, and to assure its use, almost all BURNDY aluminum connectors, except the large clamp type substation connectors, are supplied factory filled with PENETROX™ compound. For the tubular compression connectors, the tubular barrels are sufficiently filled with PENETROX™ and capped. For other types, the contact grooves are filled with PENETROX™ and enclosed in plastic packaging in a process called 'stripsealing'.

Clamp vs. Compression: In general, a compression connection can be expected to be more corrosion resistant than a clamp connection. The high pressures applied to a compression connector more effectively seal the contact against the penetration of moisture. The tubular sleeve of a compression connector has no side openings such as exist in clamp connectors between the clamping members. On the other hand, the clamp connector can be made more corrosion resistant if the conductor grooves conform more closely with the conductor contour. Thus a clamp connector made to accommodate a wide range of conductor sizes cannot be expected to be as corrosion resistant as one designed for one specific conductor size. Nevertheless, the differences in effectiveness of various designs can be minimized if a good contact compound is used.

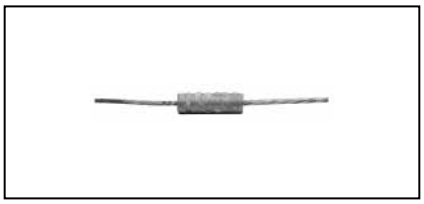

Figure 5

Negligible Corosion of Severe Salt Spray on Compression Connector Joining Aluminum to Copper.

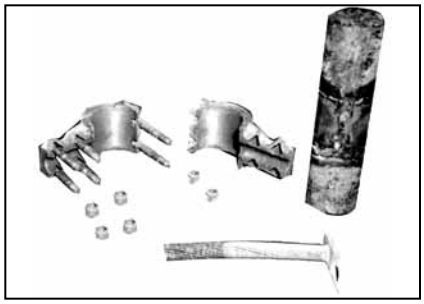

Figure 6

Large Aluminum Bolted Connector Joining Copper Run to Aluminum Tap After Severe Salt Spray Test.

HARDWARE DATA

Recommended Tightening Torque

The hardware used in connectors must be compatible with the connector material, have high mechanical strength and be corrosion resistant.

Copper alloy connectors have hardware made of DURIUM™, which is the BURNDY trade name for silicon bronze alloy ASTMB99. This material was first introduced by BURNDY in 1927 for use in outdoor construction and today is the standard throughout the industry.

Aluminum connectors generally have aluminum alloy hardware. The bolts are 2024T4 and anodized to resist corrosion. The nuts are 6061T6, which is resistant to corrosion and does not require anodizing. Bolts are lubricated to eliminate galling and to provide consistent clamping forces.

The size material for clamping hardware are selected to provide the required force when tightened to the recommended torque. To reduce or greatly exceed the recommended torque can adversely affect the performance of the connector.

Steel Hardware	
Bolt Size	**Recommended Torque (Inch Pounds)**
1/4 - 20	80
5/16 - 18	180
3/8 - 16	240
1/2 - 13	480
5/8 - 11	660
3/4 - 10	1050

Aluminum Hardware	
Bolt Size	**Recommended Torque (Inch Pounds)**
1/2 - 13	300
5/8 - 11	480
3/4 - 10	650

DURIUM™ (Silicon Bronze) Hexagonal Bolt Data

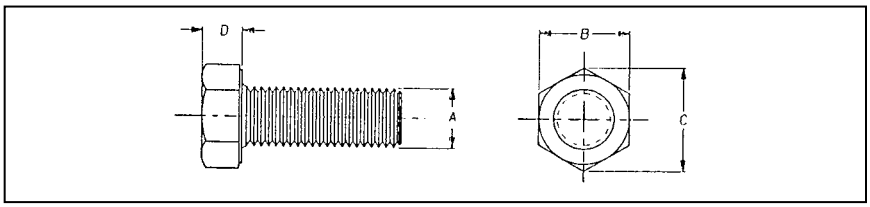

DURIUM™ (Silicon Bronze) Hardware							
Catalog Number Series*	"A" Bolt Size	"B"	"C"	"D"	Recommended Torque (in-lb)**	Min. Breaking Force (lb)	Min. Shearing Force (lb)
25X_ _ _HEB	1/4 - 20	7/16	.50	.16	80	1,780	990
31X_ _ _ HEB	5/16 - 18	1/2	.56	.21	180	2,930	1,640
38X_ _ _ HEB	3/8 - 16	9/16	.65	.24	240	4,350	2,430
50X_ _ _ HEB	1/2 - 13	3/4	.87	.32	480	7,950	4,460
62X_ _ _HEB	5/8 - 11	15/16	1.08	.40	660	12,700	7,100
75X_ _ _HEB	3/4 - 10	1-1/8	1.30	.48	1050	17,510	10,540

*_ _ _ is substituted for bolt length; Consult sales representative for available lengths
**These torque values develop maximum bolt preload
This drawing is based on BURNDY engineering specification

HARDWARE DATA (continued)

Recommended Termination Hardware

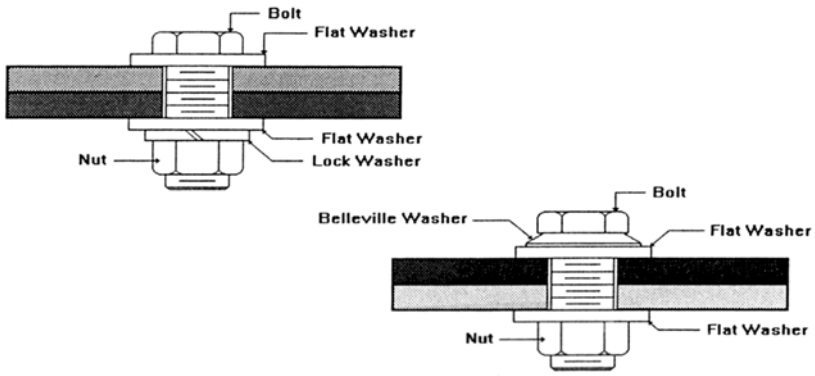

Recommended Tightening Torque per UL486A & UL486B

Table 21 - Tightening torque for screws

Test Conductor Size Installed in Connector		Tightening Torque, N•m (lbf-in)							
		Slotted Head No. 10 and Larger*				Hexagonal Head - External Drive Socket Wrench			
		Slot Width - 1.2mm (.047 in) or Less and Slot Length - 6.4mm (1/4 in.) or less		Slot Width - Over 1.2mm (.047 in) or Slot Length - Over 6.4mm (1/4 in.)		Split-Bolt Connectors		Other Connectors	
AWG or kcmil	mm²	A	B	A	B	A	B	A	B
30 - 10	.05 - 5.3	1.7 (15)	2.3 (20)	2.8 (25)	4.0 (35)	7.3 (65)	9.0 (80)	6.8 (60)	8.5 (75)
8	8.4	2.3 (20)	2.8 (25)	3.4 (30)	4.5 (40)	7.3 (65)	9.0 (80)	6.8 (60)	8.5 (75)
6 - 4	13.2 - 21.2	2.8 (25)	4.0 (35)	4.0 (35)	5.1 (45)	15.3 (135)	18.6 (165)	10.2 (90)	12.4 (110)
3	26.7	2.8 (25)	4.0 (35)	4.5 (40)	5.6 (50)	25.4 (225)	31.1 (275)	14.1 (125)	16.9 (150)
2	33.6	3.4 (30)	4.5 (40)	4.5 (40)	5.6 (50)	25.4 (225)	31.1 (275)	14.1 (125)	16.9 (150)
1	42.4	-	-	4.5 (40)	5.6 (50)	25.4 (225)	31.1 (275)	14.1 (125)	16.9 (150)
1/0 - 2/0	53.5 - 67.4	-	-	4.5 (40)	5.6 (50)	35.6 (315)	43.5 (385)	16.9 (150)	20.3 (180)
3/0 - 4/0	85.0 - 107.2	-	-	4.5 (40)	5.6 (50)	45.2 (400)	56.5 (500)	22.6 (200)	28.2 (250)
250 - 350	127 - 177	-	-	4.5 (40)	5.6 (50)	62.1 (550)	73.4 (650)	28.2 (250)	36.7 (325)
400	203	-	-	4.5 (40)	5.6 (50)	76.3 (675)	93.2 (825)	28.2 (250)	36.7 (325)
500	253	-	-	4.5 (40)	5.6 (50)	76.3 (675)	93.2 (825)	33.9 (300)	42.4 (375)
600 - 750	304 - 380	-	-	4.5 (40)	5.6 (50)	90.4 (800)	113.0 (1000)	33.9 (300)	42.4 (375)
800 - 1000	406 - 508	-	-	4.5 (40)	5.6 (50)	111.7 (900)	124.3 (1100)	45.2 (400)	56.5 (500)
1250 - 2000	635 - 1000	-	-	-	-	111.7 (900)	124.3 (1100)	56.5 (500)	67.8 (600)

* For values of slot width or length not corresponding to those specified, select the largest torque value associated with the conductor size. Slot width is the nominal design value. Slot length shall be measured at the bottom of the slot.

HARDWARE DATA (continued)

Recommended Tightening Torque per UL486A & UL486B

Table 22 - Tightening torque for slotted head screws smaller than No. 10 intended for use with 8 AWG (8.4 mm^2) or smaller conductors

Slot Length of Screw*		Tightening Torque, N●m (lbf-in)			
		Slot Width of Screw Smaller than 1.2 mm (.047 in.)[b]		Slot Width of Screw 1.2mm (.047 in.) and larger**	
mm	inch	A	B	A	B
Less than 4	Less than 5/32	0.68 (6)	0.79 (7)	0.79 (7)	1.0 (9)
4	5/32	0.68 (6)	0.79 (7)	1.1 (10)	1.4 (12)
4.8	3/16	0.68 (6)	0.79 (7)	1.1 (10)	1.4 (12)
5.6	7/32	0.68 (6)	0.79 (7)	1.1 (10)	1.4 (12)
6.4	1/4	0.79 (7)	1.0 (9)	1.1 (10)	1.4 (12)
7.1	9/32	-	-	1.4 (12)	1.7 (15)
Above 7.1	Above 9/32	-	-	1.8 (16)	2.3 (20)

* For slot lengths of intermediate values, select torques pertaining to next shorter slot length.
Also see Table 21 for screws with multiple tightening means.
Slot length shall be measured at the bottom of the slot.
** Slot width is the nominal design value

Recommended Tightening Torque per UL486A & UL486B

Table 23 - Tightening torque for screws with recessed allen or square drives

Socket Width Across Flats*		Tightening Torque, N●m (lbf-in)	
mm	inch	A	B
3.2	1/8	4.0 (35)	5.1 (45)
4.0	5/32	9.0 (80)	11.3 (100)
4.8	3/16	11.3 (100)	13.6 (120)
5.6	7/32	13.6 (120)	16.9 (150)
6.4	1/4	16.9 (150)	25.4 (225)
7.9	5/16	25.4 (225)	33.9 (300)
9.5	3/8	33.9 (300)	45.2 (400)
12.7	1/2	45.2 (400)	56.6 (500)
14.3	9/16	56.6 (500)	67.8 (600)

* See Table 21 for screws with multiple tightening means

HARDWARE DATA (continued)

Recommended Clamping on Bolted Connectors:

When installing a bolted connector, an appropriate sequence needs to be followed.

INSTALLATION INSTRUCTIONS:

1. Nuts need to be tightened up to 30% of expected torque.
2. A check needs to be done to ensure the clamping elements are even.

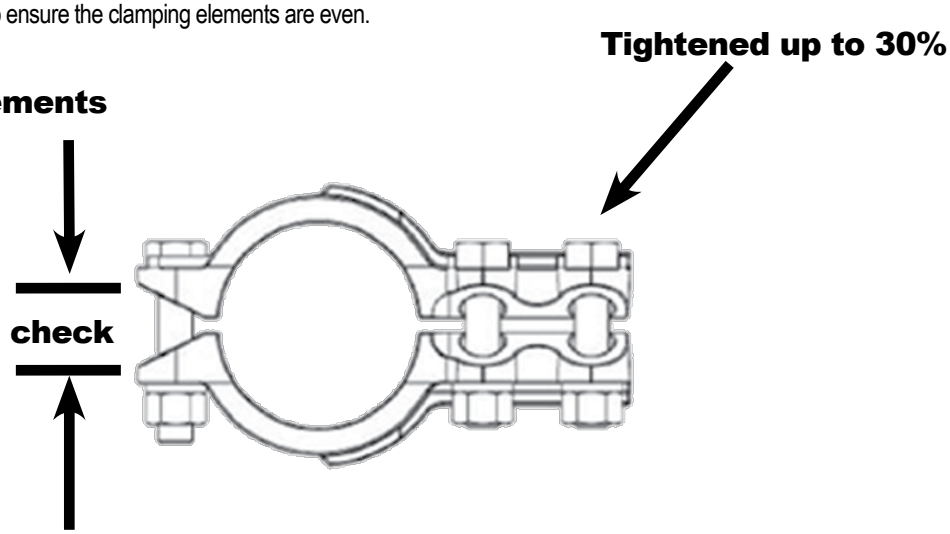

3. Tightening has to follow a sequence (1-6) as shown below. As a general rule, the torque has to be applied to the nut. For ease of installation most connectors are designed for one wrench installation. A torque wrench is recommended when tightening the nut to ensure the proper torque is applied.

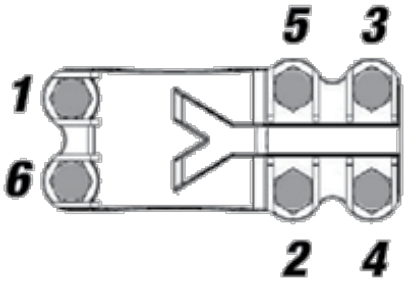

BURNDY offers three sizes of professional grade torque wrenches, catalog number **BTW30150** to be used on connectors requiring 30-150 in-lbs., the **BTW150750**, designed for 150-750 in-lbs., and the **BTW1575F12**, designed for 15 - 75 ft-lbs. These micro-adjustable “click-type” torque wrenches feature an easy-to-read scale that can be easily matched to the recommended torque of each of our mechanical connector products. Calibration traceable to N.I.S.T.

CABLE DATA

COPPER TUBE (BUS)

Size of Tube IPS	Diameter of Tube (Inches)		Wall Thickness (Inches)
	Outside	Inside	
STANDARD PIPE SIZES			
1/4”	0.540	0.375	0.082
3/8”	0.675	0.494	0.090
1/2”	0.840	0.625	0.107
3/4”	1.050	0.822	0.114
1”	1.315	1.062	0.126
1-1/4”	1.660	1.368	0.146
1-1/2”	1.900	1.600	0.150
2”	2.375	2.062	0.156
2-1/2”	2.875	2.500	0.187
3”	3.500	3.062	0.219
3-1/2”	4.000	3.500	0.250
4”	4.500	4.000	0.250
4-1/2”	5.000	4.500	0.250
5”	5.563	5.063	0.250
6”	6.625	6.125	0.250
EXTRA HEAVY PIPE SIZES			
1/4”	0.540	0.294	0.123
3/8”	0.675	0.421	0.127
1/2”	0.840	0.542	0.149
3/4”	1.050	0.736	0.157
1”	1.315	0.951	0.182
1-1/4”	1.660	1.272	0.194
1-1/2”	1.900	1.494	0.203
2”	2.375	1.933	0.221
2-1/2”	2.875	2.315	0.280
3”	3.500	2.892	0.304
3-1/2”	4.000	3.358	0.321
4”	4.500	3.818	0.341
4-1/2”	5.000	4.250	0.375
5”	5.563	4.813	0.375
6”	6.625	5.751	0.437

Size of Tube IPS	Diameter of Tube (Inches)		Wall Thickness (Inches)
	Outside	Inside	
DOUBLE EXTRA HEAVY PIPE SIZES			
1/2”	0.840	0.252	0.294
3/4”	1.050	0.434	0.308
1”	1.315	0.599	0.358
1-1/4”	1.660	0.896	0.382
1-1/2”	1.900	1.100	0.400
2”	2.375	1.503	0.436
2-1/2”	2.875	1.771	0.552
3”	3.500	2.300	0.600
3-1/2”	4.000	2.728	0.636
4	4.500	3.152	0.674
4-1/2”	5.000	3.580	0.710
5”	5.563	4.063	0.750
6”	6.625	4.897	0.864

Tube dimensions (excepting wall thickness of double extra heavy) taken from A.S.T.M. Specification B42-33.
Tubular values based on a density of 0.322 pound per cubic inch.
* Conductivity of 98% I.A.C.S. at 20˚ C or 68˚ F

CABLE DATA (continued)

SOLID COPPER WIRE (ASTM B1, B2, & B3)

Size AWG (Solid)	Wire Dia (Inch)	Hard Drawn	Medium Drawn	Soft Drawn
		Normal Breaking Load (Pounds)	Minimum Breaking Load (Pounds)	Elongation in 10 in. % Min.
18	.040	85.8	67.6	25
17	.045	107.5	84.7	25
16	.050	135.2	106.2	25
15	.057	170.0	133.0	25
14	.064	213.8	166.6	25
13	.071	268.2	208.0	25
12	.080	337.0	261.6	25
11	.090	422.5	327.6	25
10	.101	529.2	410.4	25
9	.114	661.0	514.2	30
8	.128	826.0	643.9	30
7	.144	1,030.0	806.6	30
6	.162	1,280.0	1,010.0	30
5	.181	1,591.0	1,265.0	30
4	.204	1,970.0	1,584.0	30
3	.229	2,439.0	1,984.0	30
2	.257	3,003.0	2,450.0	30
1	.289	3,688.0	3,024.0	30
1/0	.324	4,519.0	3,730.0	35
2/0	.364	5,518.0	4,599.0	35
3/0	.409	6,722.0	5,667.0	35
4/0	.460	8,143.0	6,980.0	35

COMPACT STRANDED COPPER CABLE (ASTM SPEC. B496)

Conductor Size		Number of Wires	Conductor Dia (in)
KCMIL	AWG		
1000		61[1]	1.060
900		61[1]	0.999
800		61[1]	0.938
750		61[1]	0.908
700		61[1]	0.877
650		61[1]	0.845
600		61[1]	0.813
550		61[1]	0.775
500		37[2]	0.736
450		37[2]	0.700
400		37[2]	0.659
350		37[2]	0.616
300		37[2]	0.570
250		37[2]	0.520
	4/0	19[3]	0.475
	3/0	19[3]	0.423
	2/0	19[3]	0.376
	1/0	19[3]	0.336
	1	19[3]	0.299
	2	7	0.268
	4	7	0.213
	6	7	0.169
	8	7	0.134

[1] 58 Wires Minimum
[2] 35 Wires Minimum
[3] 18 Wires Minimum

CABLE DATA (continued)

STRANDED COPPER WIRE (ASTM B8 EXCLUDING BREAKING LOADS)

Size		A.S.T.M. Strandings			Hard Drawn	Medium Drawn	Soft Drawn
Stranded		Class	No. of Wires	Cable Diameter (Inches)	Minimum Breaking Load (Pounds)		
Circular Mils	AWG						
1,022	**20**	B	7	0.036	50.0	40.67	32.1
1,624	**18**	B	7	0.045	79.0	63.91	51.0
2,583	**16**	B	7	0.057	124.7	100.4	81.1
4,107	**14**	B	7	0.072	197.1	157.7	124.2
6,530	**12**	B	7	0.091	311.1	247.7	197.5
10,380	**10**	B	7	0.116	491.7	388.9	314.0
13,090	**9**	B	7	0.130	618.2	487.4	395.9
16,510	**8**	B	7	0.146	777.2	610.7	499.2
20,820	**7**	B	7	0.164	977.1	765.2	629.5
26,250	**6**	B	7	0.184	1,288.0	958.6	793.8
33,100	**5**	B	7	0.206	1,542.0	1,201.0	1,001.0
41,740	**4**	AA	3	0.254	1,879.0	1,465.0	1,213.0
41,740	**4**	B&A	7	0.232	1,938.0	1,505.0	1,262.0
52,630	**3**	AA	3	0.285	2,359.0	1,835.0	1,530.0
52,630	**3**	B&A	7	0.260	2,433.0	1,885.0	1,592.0
66,370	**2**	AA	3	0.320	2,913.0	2,299.0	1,929.0
66,370	**2**	B&A	7	0.292	3,045.0	2,361.0	2,007.0
83,690	**1**	AA	3	0.360	3,621.0	2,879.0	2,432.0
83,690	**1**	A	7	0.328	3,804.0	2,958.0	2,432.0
83,690	**1**	B	19	0.332	3,899.0	3,037.0	2,531.0
105,500	**1/0**	A&A	7	0.368	4,752.0	3,705.0	3,067.0
105,500	**1/0**	-	12	0.390	4,841.0	3,755.0	3,191.0
105,500	**1/0**	B	19	0.373	4,901.0	3,805.0	3,191.0
133,100	**2/0**	A&A	7	0.414	5,926.0	4,640.0	3,867.0
133,100	**2/0**	-	12	0.438	6,048.0	4,703.0	3,867.0
133,100	**2/0**	B	19	0.419	6,152.0	4,765.0	4,024.0
167,800	**3/0**	A&A	7	0.464	7,366.0	5,812.0	4,876.0
167,800	**3/0**	-	12	0.492	7,556.0	5,890.0	4,876.0
167,800	**3/0**	B	19	0.470	7,698.0	5,970.0	5,074.0
211,600	**4/0**	A&A	7	0.522	9,154.0	7,278.0	6,149.0
211,600	**4/0**	-	12	0.522	9,483.0	7,378.0	6,149.0
211,600	**4/0**	B	19	0.528	9,617.0	7,479.0	6,149.0

CABLE DATA (continued)

STRANDED COPPER WIRE (ASTM B8 EXCLUDING BREAKING LOADS continued)

Size	A.S.T.M. Strandings			Hard Drawn	Medium Drawn	Soft Drawn
Circular Mils	Class	No. of Wires	Cable Diameter (Inches)	Minimum Breaking Load (Pounds)		
250 kcmil	AA	12	0.600	11,130	8,717	7,265
250 kcmil	A	19	0.574	11,360	8,986	7,265
250 kcmil	B	37	0.575	11,560	8,952	7,559
300 kcmil	AA	12	0.657	13,170	10,390	8,718
300 kcmil	A	19	0.628	13,510	10,530	8,718
300 kcmil	B	37	0.630	13,870	10,740	9,071
350 kcmil	AA	12	0.710	15,140	12,040	10,170
350 kcmil	A	19	0.679	15,590	12,200	10,170
350 kcmil	B	37	0.681	16,060	12,450	10,580
400 kcmil	A&AA	19	0.726	17,810	13,950	11,620
400 kcmil	B	37	0.728	18,320	14,140	11,620
450 kcmil	AA	19	0.770	19,750	15,590	13,080
450 kcmil	B&A	37	0.772	20,450	15,900	13,080
500 kcmil	AA	19	0.811	21,950	17,320	14,530
500 kcmil	B&A	37	0.813	22,510	17,550	14,530
600 kcmil	A&AA	37	0.891	27,020	21,060	17,440
600 kcmil	B	61	0.893	27,530	21,350	18,140
700 kcmil	AA	37	0.963	31,170	24,410	20,340
700 kcmil	B&A	61	0.964	31,820	24,740	20,340
750 kcmil	AA	37	0.997	33,400	26,150	21,790
750 kcmil	B&A	61	0.998	34,090	26,510	21,790
800 kcmil	AA	37	1.029	35,120	27,710	23,250
800 kcmil	B&A	61	1.031	36,360	28,270	23,250
900 kcmil	AA	37	1.092	39,510	31,170	26,150
900 kcmil	B&A	61	1.094	40,520	31,590	26,150
1000 kcmil	AA	37	1.151	43,830	34,400	29,060
1000 kcmil	B&A	61	1.152	45,030	35,100	29,060
1250 kcmil	A	61	1.288	55,670	43,590	36,320
1250 kcmil	B	91	1.289	56,280	43,880	36,320
1500 kcmil	A	61	1.411	65,840	51,950	43,590
1500 kcmil	B	91	1.412	67,540	52,650	43,590
1750 kcmil	A	91	1.526	77,930	61,020	50,850
1750 kcmil	B	127	1.526	78,800	61,430	50,850
2000 kcmil	A	91	1.630	87,790	69,270	58,120
2000 kmcil	B	127	1.632	90,050	70,210	58,120

CABLE DATA (continued)

FLEXIBLE COPPER STRANDED CABLE

Conductor Size kcmil or B & S G (AWG)	# Strands	Strand Diameter	Nominal Diameter	Class
8	41	.0201	.156	I
8	49	.0184	.166	G
8	133	.0111	.167	H
8	168	.010	.157	K
8	420	.0063	.162	M
7	49	.0206	.185	G
7	52	.0201	.185	I
7	133	.0125	.188	H
7	210	.010	.179	K
7	532	.0063	.196	M
6	49	.0231	.208	G
6	63	.0201	.207	I
6	133	.0140	.210	H
6	266	.010	.210	K
6	665	.0063	.215	M
5	49	.0260	.234	G
5	84	.0201	.235	I
5	133	.0158	.237	H
5	336	.010	.235	K
5	836	.0063	.240	M
4	49	.0292	.263	G
4	105	.0201	.263	I
4	133	.0177	.266	.H
4	420	.010	.272	K
4	1064	.0063	.269	M
3	49	.0328	.295	G
3	133	.0199	.299	I
3	133	.0201	.291	H
3	532	.010	.304	K
3	1323	.0063	.305	M
2	49	.0368	.331	G
2	133	.0223	.335	I
2	161	.0201	.319	H
2	665	.010	.338	K
2	1666	.0063	.337	M
1	133	.0251	.377	G
1	210	.0201	.367	I
1	259	.018	.378	H
1	836	.010	.397	K
1	2107	.0063	.376	M

Conductor Size kcmil or B & S G (AWG)	# Strands	Strand Diameter	Nominal Diameter	Class
1/0	133	.0282	.423	I
1/0	259	.0202	.424	G
1/0	266	.0201	.441	H
1/0	1064	.010	.451	K
1/0	2646	.0063	.423	M
2/0	133	.0316	.474	G
2/0	259	.0227	.477	I
2/0	342	.0201	.500	H
2/0	1323	.010	.470	K
2/0	3325	.0063	.508	M
3/0	133	.0355	.533	G
3/0	259	.0255	.536	I
3/0	418	.0201	.549	H
3/0	1666	.010	.533	K
3/0	4256	.0063	.576	M
4/0	133	.0399	.599	G
4/0	259	.0286	.601	I
4/0	532	.0201	.613	H
4/0	2107	.010	.627	K
4/0	5320	.0063	.645	M
250	259	.0311	.650	G
250	427	.0242	.653	I
250	637	.0201	.682	.H
250	2499	.010	.682	K
250	6384	.0063	.713	M
300	259	.0340	.714	G
300	427	.0265	.716	I
300	735	.0201	.737	H
300	2989	.010	.768	K
300	7581	.0063	.768	M
350	259	.0368	.773	G
350	427	.0286	.772	I
350	882	.0201	.800	H
350	3458	.010	.809	K
350	8806	.0063	.825	M
400	259	.0393	.825	G
400	427	.0306	.826	I
400	980	.0201	.831	H
400	3990	.010	.878	K
400	10101	.0063	.901	M

CABLE DATA (continued)

FLEXIBLE COPPER STRANDED CABLE (continued)

Conductor Size kcmil or B & S G (AWG)	# Strands	Strand Diameter	Nominal Diameter	Class
450	259	.0417	.876	I
450	427	.0325	.878	G
450	1127	.0201	.894	H
450	4522	.010	.933	K
450	11396	.0063	.940	M
500	259	.0439	.922	G
500	427	.0342	.923	I
500	1225	.0201	.941	H
500	5054	.010	.988	K
500	12691	.0063	.997	M
600	427	.0375	1.013	G
600	703	.0292	1.022	I
600	1470	.0201	1.027	H
600	5985	.010	1.125	K
600	14945	.0063	1.084	M
700	427	.0405	1.094	G
700	703	.0316	1.106	I
700	1729	.0201	1.194	H
700	6916	.010	1.207	K
700	17507	.0063	1.183	M
800	427	.0433	1.169	G
800	703	.0337	1.180	I
800	1995	.0201	1.290	.H
800	7980	.010	1.305	K
800	20069	.0063	1.256	M
900	427	.0459	1.239	G
900	703	.0358	1.253	I
900	2261	.0201	1.372	H
900	9065	.010	1.323	K
900	22631	.0063	1.331	M
1000	427	.0484	1.307	G
1000	703	.0377	1.320	I
1000	2527	.0201	1.427	H
1000	10101	.010	1.419	K
1000	25193	.0063	1.404	M

CABLE DATA (continued)

ALUMINUM TUBE

Size of Tube IPS	Diameter of Tube (Inches)		Wall Thickness (Inches)
	Outside	Inside	
STANDARD PIPE SIZES			
1/4”	0.540	0.364	0.088
3/8”	0.675	0.493	0.091
1/2”	0.840	0.622	0.109
3/4”	1.050	0.824	0.113
1”	1.315	1.049	0.133
1-1/4”	1.660	1.380	.0.140
1-1/2”	1.900	1.610	0.145
2”	2.375	2.067	0.154
2-1/2”	2.875	2.469	0.203
3”	3.500	3.068	0.213
3-1/2”	4.000	3.548	0.226
4”	4.500	4.026	0.237
4-1/2”	5.000	4.506	0.247
5”	5.563	5.047	0.258
6”	6.625	6.065	0.280

Size of Tube IPS	Diameter of Tube (Inches)		Wall Thickness (Inches)
	Outside	Inside	
EXTRA HEAVY PIPE SIZES			
1/4”	0.540	0.302	0.119
3/8”	0.675	0.423	0.126
1/2”	0.840	0.546	0.147
3/4”	1.050	0.742	0.154
1”	1.315	0.957	0.179
1-1/4”	1.660	1.278	0.191
1-1/2”	1.900	1.500	0.200
2”	2.375	1.939	0.218
2-1/2”	2.875	2.323	0.276
3”	3.500	2.900	0.300
3-1/2”	4.000	3.364	0.318
4”	4.500	3.826	0.337
4-1/2”	5.000	4.290	0.355
5”	5.563	4.813	0.375
6”	6.625	5.761	0.432

CABLE DATA (continued)

ALUMINUM 1350 CABLE
BARE-CLASSES AA AND A - Hard Drawn

Cable Code Word	Size (circular mils or AWG)	Copper Equivalent based on equal D.C. resistance, Cu 97% Al 61%	# of Wires	Cable Dia. (inches)	Ultimate Strength (pounds)
Peachbell	6	8	7	0.184	528
Rose	4	6	7	0.232	826
Lily	3	5	7	0.260	1022
Iris	2	4	7	0.292	1266
Pansy	1	3	7	0.328	1537
Poppy	1/0	2	7	0.368	1865
Aster	2/0	1	7	0.414	2350
Phlox	3/0	1/0	7	0.464	2845
Oxlip	4/0	2/0	7	0.522	3590
Daisy	266800	3/0	7	0.586	4525
Laurel	266800	3/0	19	0.593	4800
Tulip	336400	4/0	19	0.666	5940
Canna	397500	250000	19	0.724	6880
Cosmos	477000	300000	19	0.793	8090
Syringa	477000	300000	37	0.795	8600
Dahlia	556500	350000	19	0.856	9440
Mistletoe	556500	350000	37	0.858	9830
Orchid	636000	400000	37	0.918	11240
Violet	715500	450000	37	0.974	12640
Nasturtium	715500	450000	61	0.975	13150
Arbutus	795000	500000	37	1.026	13770
Lilac	795000	500000	61	1.028	14330
Anemone	874500	550000	37	1.077	14830
Crocus	874500	550000	61	1.078	15760
Magnolia	954000	600000	37	1.124	16180
Goldenrod	954000	600000	61	1.126	16860
Bluebell	1033500	650000	37	1.170	17530
Larkspur	1033500	650000	61	1.172	18260
Marigold	1113000	700000	61	1.216	19660
Narcissus	1272000	800000	61	1.300	22000
Carnation	1431000	900000	61	1.379	24300
Coreopsis	1590000	1000000	61	1.454	27000
Dogwood	1590000	1000000	91	1.454	28100

CABLE DATA (continued)

ALUMINUM 1350 CABLE
BARE-CLASS B

Size (circular mils or AWG)	Copper Equivalent based on equal D.C. resistance, Cu 97% Al 61%	# of Wires	Cable Dia. (inches)	Ultimate Strength (pounds) Hard Drawn	Minimum Ultimate Strength (pounds) 3/4 Hard	Minimum Ultimate Strength (pounds) Inter Temper
250000	157300	37	0.575	4860	3338	2946
300000	188800	37	0.629	5831	4005	3534
350000	220200	37	0.681	6680	4673	4123
400000	251500	37	0.728	7352	5341	4713
450000	283000	37	0.772	8110	6007	5301
500000	314500	37	0.813	9012	6675	5890
550000	346000	61	0.855	10490	7344	6480
600000	377000	61	0.893	11450	8010	7068
650000	409000	61	0.929	11940	8678	7657
700000	440000	61	0.964	12860	9346	8247
750000	472000	61	0.998	13510	10010	8835
800000	503000	61	1.031	14410	10680	9424
900000	566000	61	1.094	15900	12010	10600
1000000	629000	61	1.152	17670	13350	11780
1100000	692000	91	1.209	20210	14680	12950
1200000	755000	91	1.263	21630	16020	14130
1250000	786000	91	1.289	22530	16690	14720
1300000	818000	91	1.315	23430	17350	15310
1400000	880000	91	1.364	24750	18700	16500
1500000	943000	91	1.412	26500	20020	17670
1600000	1006000	127	1.459	28840	21360	18850
1700000	1069000	127	1.504	30630	22690	20020
1750000	1101000	127	1.526	31530	23350	20610
1800000	1132000	127	1.548	32450	24030	21210
1900000	1195000	127	1.590	33570	25360	22380
2000000	1258000	127	1.632	35340	26700	23560
2500000	1570000	127	1.824	43300	33380	29460
3000000	1890000	169	1.998	53010	40050	35340
3500000	2200000	169	2.158	60610	46730	41230

CABLE DATA (continued)

ACSR

Cable Code Word	Size (circular mils or AWG)	No. Alum Strands	No. Steel Strands	Complete Cable Dia. (inches)	Steel Core Dia. (inches)	Copper Equivalent based on equal D.C. resistance, Cu 97% Al 61%	Ultimate Strength (pounds)
Turkey	6	6	1	0.198	0.0661	8	1170
Thrush	5	6	1	0.223	0.0743	7	1460
Swan	4	6	1	0.250	0.0834	6	1830
Swanate	4	7	1	0.257	0.1029	6	2288
Swallow	3	6	1	0.281	0.0937	5	2250
Sparrow	2	6	1	0.316	0.1052	4	2790
Sparate	2	7	1	0.325	0.1299	4	3525
Robin	1	6	1	0.355	0.1182	3	3480
Raven	1/0	6	1	0.398	0.1327	2	4280
Quail	2/0	6	1	0.447	0.1490	1	5345
Pigeon	3/0	6	1	0.502	0.1672	1/0	6675
Penguin	4/0	6	1	0.563	0.1878	2/0	8420
Waxwing	266800	18	1	0.609	0.1217	3/0	7100
Owl	266800	26	7	0.633	0.2109	3/0	9645
Patridge	266800	26	7	0.642	0.2364	3/0	11250
Ostrich	300000	26	7	0.680	0.2505	188700	12650
Merlin	336400	18	1	0.684	0.1367	4/0	8950
Linnet	336400	26	7	0.721	0.2655	4/0	14050
Oriole	336400	30	7	0.741	0.3177	4/0	17040
Chickadee	397500	18	1	0.743	0.1486	250000	10400
Brant	397500	24	7	0.771	0.2575	250000	14690
Ibis	397500	26	7	0.783	0.2883	250000	16190
Lark	397500	30	7	0.806	0.3453	250000	19980
Pelican	477000	18	1	0.814	0.1628	300000	12300
Flicker	477000	24	7	0.846	0.2820	300000	17200
Hawk	477000	26	7	0.858	0.3162	300000	19430
Hen	477000	30	7	0.883	0.3783	300000	23300
Parakeet	556500	24	7	0.914	0.3045	350000	19850
Dove	556500	26	7	0.927	0.341	350000	22400
Eagle	556500	30	7	0.953	0.409	350000	27200
Peacock	605000	24	7	0.953	0.318	380500	21500
Squab	605000	26	7	0.966	0.356	380500	24100
Teal	605000	30	19	0.994	0.426	380500	30000
Rook	636000	24	7	0.977	0.326	400000	22600
Grosbeak	636000	26	7	0.990	0.365	400000	25000
Egret	636000	30	19	1.019	0.437	400000	31500
Flamingo	666600	24	7	1.000	0.333	419000	23700
Crow	715500	54	7	1.036	0.345	450000	26300
Starling	715500	26	7	1.051	0.387	450000	28100
Redwing	715500	30	19	1.081	0.463	450000	34600
Condor	795000	54	7	1.093	0.364	500000	28500

CABLE DATA (continued)

ACSR (continued)

Cable Code Word	Size (circular mils or AWG)	No. Alum Strands	No. Steel Strands	Complete Cable Dia. (inches)	Steel Core Dia. (inches)	Copper Equivalent based on equal D.C. resistance, Cu 97% Al 61%	Ultimate Strength (pounds)
Drake	795000	26	7	1.108	0.408	500000	31200
Mallard	795000	30	19	1.140	0.489	500000	38400
Crane	874500	54	7	1.146	0.382	550000	31400
Canary	900000	54	7	1.162	0.387	566000	32300
Cardinal	954000	54	7	1.196	0.399	600000	34200
Curlew	1033500	54	7	1.246	0.415	650000	37100
Finch	1113000	54	19	1.293	0.431	700000	40200
Pheasant	1272000	54	19	1.382	0.461	800000	44800
Plover	1431000	54	19	1.465	0.489	900000	50400
Falcon	1590000	54	19	1.545	0.515	100000	56000

HIGH STRENGTH ACSR

Cable Code Word	Size (circular mils or AWG)	No. Alum Strands	No. Steel Strands	Complete Cable Dia. (inches)	Steel Core Dia. (inches)	Copper Equivalent based on equal D.C. resistance, Cu 97% Al 61%	Ultimate Strength (pounds)
Grouse	80000	8	1	0.367	0.1670	50310	5200
Petrel	101800	12	7	0.461	0.2763	64160	9860
Minorca	110800	12	7	0.481	0.2883	69700	10730
Leghorn	134600	12	7	0.530	0.3177	84600	12920
Guinea	159000	12	7	0.576	0.3453	100000	15200
Dotterel	176900	12	7	0.607	0.3642	111200	16440
Dorking	190800	12	7	0.631	0.3783	120000	17730
Cochin	211300	12	7	0.663	0.3981	132900	19640
Brahma	203200	16	9	0.714	0.4885	127800	27500

CABLE DATA (continued)

COMPACT ALUMINUM 1350 CABLE (ASTM B400) EXTRA HARD

Conductor Size		Class	No. of Wires	Cable Diameter (Inches)	Breaking Strength (pounds)
kcmil	AWG				
1000		B	61[1]	1.060	17700
900		B	61[1]	0.999	15900
800		B	61[1]	0.938	14400
750		B	61[1]	0.908	13500
700		B	61[1]	0.877	12900
650		B	61[1]	0.845	11900
600		B	61[1]	0.813	11500
556		AA	19[3]	0.780	9750
550		B	61[1]	0.775	10500
500		B	37[2]	0.736	9110
500		AA	19[3]	0.736	8760
477		AA	19[3]	0.722	8360
450		B	37[2]	0.700	8200
400		B	37[2]	0.659	7440
397		AA, A	19[3]	0.659	7110
350		B	37[2]	0.616	6760
350		A	19[3]	0.616	6390
336		A	19[3]	0.603	6150
336		AA	7	0.603	5960
300		B	37[2]	0.570	5890
300		A	19[3]	0.570	5480
300		AA	7	0.570	5430
266		A	19[3]	0.537	4970
266		AA	7	0.537	4830
250		B	37[2]	0.520	4910
250		A	19[3]	0.520	4660
250		AA	7	0.520	4520
	4/0	B	19[3]	0.475	4020
	4/0	AA, A	7	0.475	3830
	3/0	B	19[3]	0.423	3310
	3/0	AA, A	7	0.423	3040
	2/0	B	19[3]	0.376	2670
	2/0	AA, A	7	0.376	2510
	1/0	B	19[3]	0.336	2160
	1/0	AA, A	7	0.336	1990
	1	B	19[3]	0.299	1740
	1	AA, A	7	0.299	1640
	2	AA, A, B	7	0.268	1350
	3	A, B	7	0.238	1090
	4	A, B	7	0.213	.881
	6	A, B	7	0.169	.563
	8	A, B	7	0.134	.312

[1] 58 Wires Minimum
[2] 35 Wires Minimum
[3] 18 Wires Minimum

CABLE DATA (continued)

ALUMINUM ALLOY 5005 CABLE (ASTM B397)

Conductor Size cmil	Number of Wires	Approx. Aluminum 1350 Size having Equivalent Resistance		Size & Stranding of ACSR with Equal Diameter			Rated Strength (pounds)
		cmil	AWG	cmil	AWG	Stranding	
927200	37	795000	-	795000	-	26/7	23900
740800	37	636000	-	636000	-	26/7	19300
652400	19	556500	-	556500	-	26/7	16200
587200	19	506500	-	506500	-	18/1	14600
559500	19	477000	-	477000	-	26/7	13900
503600	19	435500	-	435500	-	18/1	12500
465400	19	397500	-	397500	-	26/7	12200
419400	19	362000	-	362000	-	18/1	11200
394500	19	336400	-	336400	-	26/7	10500
355100	19	306400	-	306400	-	18/1	9600
312800	19	266800	-	266800	-	26/7	8450
281400	19	242900	-	242900	-	18/1	7610
246900	7	211600	4/0	211600	4/0	6/1	6330
195700	7	167800	3/0	167800	3/0	6/1	5020
155400	7	133100	2/0	133100	2/0	6/1	4280
123300	7	105600	1/0	105600	1/0	6/1	3440
77470	7	66360	2	66360	2	6/1	2200
48690	7	41740	4	41740	4	6/1	1430
30580	7	26240	6	26240	6	6/1	922

ALUMINUM ALLOY 6201 CABLE (ASTM B399)

Conductor Size cmil	Number of Wires	Approx. Aluminum 1350 Size having Equivalent Resistance		Size & Stranding of ACSR with Equal Diameter			Rated Strength (pounds)
		cmil	AWG	cmil	AWG	Stranding	
1439200	61	1272000	-	1272000	-	54/7	46800
1348800	61	1192500	-	1192500	-	54/7	43900
1259600	61	1113000	-	1113000	-	54/7	41000
1165100	61	1033500	-	1033500	-	54/7	37900
1077400	61	954000	-	954000	-	54/7	35000
927200	37	795000	-	795000	-	26/7	30500
740800	37	636000	-	636000	-	26/7	24400
652400	19	556500	-	556500	-	26/7	21900
559500	19	477000	-	477000	-	26/7	18800
465400	19	397500	-	397500	-	26/7	15600
394500	19	336400	-	336400	-	26/7	13300
312800	19	266800	-	266800	-	26/7	11000
246900	7	211600	4/0	211600	4/0	6/1	8560
195700	7	167800	3/0	167800	3/0	6/1	6790
155400	7	133100	2/0	133100	2/0	6/1	5390
123300	7	105600	1/0	105600	1/0	6/1	4460
77470	7	66360	2	66360	2	6/1	2800
48690	7	41740	4	41740	4	6/1	1760
30580	7	26240	6	26240	6	6/1	1110

CABLE DATA (continued)

ALUMINUM ALLOY 8000 SERIES "O" TEMPER CABLE ASTM B801)

Conductor Size		Number of Wires†	Class	Conductor Diameter (inches)			Min. Breaking Strength (pounds)
kcmil	AWG			Conventional	Compressed	Compact	
1000		127	D	1.153	1.119	1.060	6010
1000		91	C	1.153	1.118	1.060	6010
1000		61	B, A	1.152	1.117	1.060	6010
900		127	D	1.095	1.062	0.999	5400
900		91	C	1.093	1.060	0.999	5400
900		61	B, A	1.093	1.060	0.999	5400
800		127	D	1.032	1.001	0.938	4800
800		91	C	1.032	1.001	0.938	4800
800		61	B, A	1.031	1.000	0.938	4800
750		127	D	0.998	0.968	0.908	4500
750		91	C	0.999	0.969	0.908	4500
750		61	B, A	0.998	0.938	0.908	4500
700		127	D	0.965	0.936	0.877	4200
700		91	C	0.965	0.936	0.877	4200
700		61	B, A	0.964	0.935	0.877	4200
650		127	D	0.930	0.902	0.845	3900
650		91	C	0.930	0.902	0.845	3900
650		61	B	0.929	0.901	0.845	3900
650		37	A	0.928	0.900	0.845	3950
600		127	D	0.893	0.866	0.813	3600
600		91	C	0.893	0.866	0.813	3600
600		61	B	0.893	0.866	0.813	3600
600		37	A	0.891	0.864	0.813	3640
556		127	D	0.861	0.835	0.780	3340
556		91	C	0.860	0.834	0.780	3340
556		61	B	0.860	0.834	0.780	3340
556		37	A	0.858	0.832	0.780	3380
550		127	D	0.855	0.829	0.775	3300
550		91	C	0.855	0.829	0.775	3300
550		61	B	0.855	0.829	0.775	3300
550		37	A	0.853	0.827	0.775	3340
500		91	D	0.815	0.791	0.736	3000
500		61	C	0.815	0.791	0.736	3000
500		37	B, A	0.813	0.789	0.736	3040
477		91	D	0.796	0.772	0.722	2860
477		61	C	0.796	0.772	0.722	2860
477		37	B, A	0.795	0.771	0.722	2900
450		91	D	0.773	0.750	0.700	2700
450		61	C	0.773	0.750	0.700	2700
450		37	B, A	0.772	0.749	0.700	2730

CABLE DATA (continued)

ALUMINUM ALLOY 8000 SERIES "O" TEMPER CABLE (ASTM B801) Continued

Conductor Size		Number of Wires†	Class	Conductor Diameter (inches)			Min. Breaking Strength (pounds)
kcmil	AWG			Conventional	Compressed	Compact	
400		91	D	0.729	0.707	0.659	2400
400		61	C	0.729	0.707	0.659	2400
400		37	B, A	0.728	0.706	0.659	2430
397		91	D	0.727	0.705	0.659	2390
397		61	C	0.726	0.704	0.659	2390
397		37	B	0.725	0.703	0.659	2410
397		19	A	0.724	0.702	0.659	2470
350		91	D	0.682	0.661	0.616	2100
350		61	C	0.681	0.661	0.616	2100
350		37	B	0.681	0.661	0.616	2130
350		19	A	0.679	0.659	0.616	2170
336		61	C	0.669	.0649	0.603	2020
336		37	B	0.668	0.648	0.603	2040
336		19	A	0.666	0.646	0.603	2090
300		61	C	0.631	0.612	0.570	1800
300		37	B	0.630	0.611	0.570	1820
300		19	A	0.629	0.610	0.576	1860
266		61	C	0.595	0.577	0.537	1600
266		37	B	0.594	0.576	0.537	1620
266		19	A	0.593	0.575	0.537	1660
250		61	C	0.576	0.559	0.520	1500
250		37	B	0.575	0.558	0.520	1520
250		19	A	0.574	0.557	0.520	1550
	4/0	37	C	0.529	0.513	0.475	1280
	4/0	19	B	0.528	0.512	0.475	1310
	4/0	7	A	0.522	0.506	0.475	1360
	3/0	37	C	0.471	0.457	0.423	1020
	3/0	19	B	0.470	0.456	0.423	1040
	3/0	7	A	0.464	0.450	0.423	1070
	2/0	19	B	0.419	0.406	0.376	826
	2/0	7	A	0.414	0.402	0.376	853
	1/0	19	B	0.373	0.362	0.336	655
	1/0	7	A	0.368	0.357	0.336	676
	1	19	B	0.332	0.322	0.229	519
	2	7	B, A	0.292	0.283	0.268	425
	3	7	B, A	0.260	0.252	0.238	337
	4	7	B, A	0.232	0.225	0.213	267
	6	7	B, A	0.184	0.178	0.169	168
	8	7	B, A	0.146	0.142	0.134	106

† For compact-stranded constructions, the number of wires may be reduced as follows:
19-Wire Constructions - 18 Wires Minimum
61-Wire Constructions - 58 Wires Minimum
127-Wire Constructions - 122 Wires Minimum
37-Wire Constructions - 35 Wires Minimum
91-Wire Constructions - 87 Wires Minimum

CABLE DATA (continued)

COMPACT ACSR (ASTM B401)

Conductor Size		Cable Diameter (Inches)	Breaking Strength (pounds)
kcmil	AWG		
336.4		0.628	8260
266.8		0.559	6540
	4/0	0.517	7420
	3/0	0.461	5880
	2/0	0.410	4880
	1/0	0.365	3980
	1	0.326	3290
	2	0.298	3260
	2	0.290	2640
	3	0.258	2130
	4	0.236	2160
	4	0.229	1760
	6	0.182	1120

ACSR/TW (TRAP WIRE) CABLE (ASTM B779)

Conductor Size kcmil	Stranding		Nominal Diameter (inches)	Rated Strength (pounds)
	No. Aluminum Wires	No. Steel Wires		
336.4	14	1	0.63	8600
405.1	14	1	0.68	10200
477.0	18	7	0.78	17200
477.0	18	7	0.79	19400
556.5	18	7	0.84	20000
556.5	20	7	0.85	22600
565.3	20	7	0.86	22900
571.7	18	7	0.85	20600
636.0	27	1	0.85	13500
636.0	18	7	0.89	22900
636.0	20	7	0.91	25400
664.8	20	7	0.93	26600
666.6	20	7	0.91	24000
762.8	20	7	0.99	30500
768.2	20	7	0.98	27700
768.9	27	1	0.93	16400
795.0	17	7	0.96	21000
795.0	18	7	0.98	25900
795.0	20	7	0.99	28200
795.0	20	7	1.01	31800
946.7	35	7	1.08	29600
954.0	30	7	1.05	23700

Conductor Size kcmil	Stranding		Nominal Diameter (inches)	Rated Strength (pounds)
	No. Aluminum Wires	No. Steel Wires		
954.0	32	7	1.06	25900
954.0	20	7	1.08	33500
957.2	32	7	1.06	26000
959.6	22	7	1.11	37000
966.2	21	7	1.09	34000
1033.5	30	7	1.09	25700
1033.5	32	7	1.10	28100
1033.5	21	7	1.13	36300
1113.0	30	7	1.13	27500
1113.0	33	7	1.14	30000
1113.0	38	19	1.19	39100
1158.0	33	7	1.17	31600
1158.4	25	7	1.20	39600
1168.1	30	7	1.16	28900
1192.5	30	7	1.17	29500
1192.5	33	7	1.18	32400
1192.5	38	19	1.22	41900
1233.6	38	19	1.25	42900
1257.1	35	7	1.21	34200
1272.0	30	7	1.20	31400
1272.0	35	7	1.22	34600
1272.0	39	19	1.26	44100

CABLE DATA (continued)

ACSR/TW (TRAP WIRE) Continued

Conductor Size kcmil	Stranding		Nominal Diameter (inches)	Rated Strength (pounds)
	No. Aluminum Wires	No. Steel Wires		
1334.6	39	19	1.29	46300
1351.5	35	7	1.26	36700
1351.4	39	19	1.30	46800
1359.7	36	7	1.26	36900
1372.5	30	7	1.25	33400
1431.0	36	7	1.29	38900
1431.0	39	19	1.34	49600
1433.6	39	19	1.34	49700
1455.3	36	7	1.30	39200
1467.8	33	7	1.29	35800
1533.3	39	19	1.38	53200
1557.4	36	7	1.35	41900
1569.0	33	7	1.33	38200

Conductor Size kcmil	Stranding		Nominal Diameter (inches)	Rated Strength (pounds)
	No. Aluminum Wires	No. Steel Wires		
1590.0	36	7	1.36	42200
1590.0	42	19	1.41	55100
1622.0	39	19	1.42	57500
1657.4	36	7	1.39	44000
1730.6	39	19	1.47	59400
1758.6	37	19	1.47	34600
1780.0	37	19	1.45	50700
1926.9	42	19	1.55	65300
1949.6	42	7	1.50	51900
2153.8	64	19	1.60	61100
2156.0	64	19	1.61	61100
2627.3	64	19	1.76	74500

AAC/TW (ALL ALUMINUM TRAP WIRE) (ASTM B778)

Conductor Size kcmil	Nominal Diameter (inches)	Number of Wires	Rated Strength (pounds)
336.4	0.612	17	6220
397.5	0.661	17	7230
477.0	0.720	17	8530
500.0	0.736	17	8940
556.5	0.775	17	9950
600.0	0.803	17	10700
636.0	0.825	17	11400
700.0	0.864	17	12500
750.0	0.893	17	13400
795.0	0.919	17	13900
900.0	0.990	31	15800
954.0	1.018	31	16700
1000.0	1.041	31	17500
1033.5	1.057	31	18100
1113.0	1.095	31	19500
1192.5	1.132	31	20900
1272.0	1.168	31	22300
1351.5	1.202	31	23700
1431.0	1.236	31	24600
1590.0	1.315	49	27300
1750.0	1.377	49	30000
2000.0	1.468	49	34300

CABLE DATA (continued)

ACAR CABLE (ASTM B524)

Conductor Size		Number of Wires	Nominal Outside Diameter (inches)
kcmil	AWG		
2000		91	1.630
2000		61	1.630
1900		61	1.588
1800		61	1.546
1750		61	1.525
1700		61	1.502
1600		61	1.458
1500		61	1.411
1400		61	1.364
1300		61	1.314
1300		37	1.312
1250		61	1.288
1250		37	1.287
1200		61	1.263
1200		37	1.261
1100		61	1.209
1100		37	1.207
1000		61	1.152
1000		37	1.151
950		37	1.121
900		37	1.092
850		37	1.061
800		37	1.029
750		37	0.997
700		37	0.962
650		37	0.928
600		37	0.891
600		19	0.888
550		37	0.853
550		19	0.850
500		37	0.813
500		19	0.811
450		19	0.770
400		19	0.726
350		19	0.678
300		19	0.628
250		19	0.574
246.9		7	0.563

Conductor Size		Number of Wires	Nominal Outside Diameter (inches)
kcmil	AWG		
	4/0	7	0.522
195.7		7	0.502
	3/0	7	0.464
155.4		7	0.447
	2/0	7	0.414
123.3		7	0.398
	1/0	7	0.368
77.4		7	0.316
	2	7	0.292
48.6		7	0.250
	4	7	0.232
30.5		7	0.198

SSAC CABLE

Size AWG or kcmil	# Alum Strands	# Steel Strands	Conductor Diameter	Rated Strength (pounds)
266.8	22	7	.622	6030
266.8	24	7	.633	7410
266.8	26	7	.642	8880
266.8	30	7	.660	11700
300.0	26	7	.680	9970
336.4	20	7	.692	5990
336.4	22	7	.701	7610
336.4	24	7	.710	9340
336.4	26	7	.720	11200
336.4	30	7	.741	14800
397.5	20	7	.752	7090
397.5	22	7	.762	8990
397.5	24	7	.772	11000
397.5	26	7	.783	13000
397.5	30	7	.806	17500
477.0	20	7	.823	8490
477.0	22	7	.834	10800
477.0	24	7	.846	13000
477.0	26	7	.858	15600
477.0	30	7	.883	21000
500.0	30	7	.904	22000

CABLE DATA (continued)

SSAC CABLE (Continued)

Size AWG or kcmil	# Alum Strands	# Steel Strands	Conductor Diameter	Rated Strength (pounds)
556.5	20	7	.890	9910
556.5	22	7	.901	12600
556.5	24	7	.914	15200
556.5	26	7	.927	18200
556.5	30	7	.953	24500
605.0	24	7	.953	16500
605.0	26	7	.966	19700
605.0	30	7	.994	26000
605.0	30	19	.994	26600
636.0	20	7	.951	11300
636.0	22	7	.963	14100
636.0	24	7	.977	17300
636.0	26	7	.990	20700
636.0	30	7	1.019	27400
636.0	30	19	1.019	28000
666.6	24	7	1.000	18200
666.6	26	7	1.104	21700
715.5	24	7	1.036	19500
715.5	26	7	1.051	23300
715.5	30	19	1.081	30800
795.0	42	7	1.055	11800
795.0	20	7	1.063	14200
795.0	45	7	1.063	14200
795.0	22	7	1.077	17700
795.0	24	7	1.092	21700
795.0	54	7	1.092	21700
795.0	26	7	1.108	25900
795.0	30	19	1.140	34300
900.0	45	7	1.131	15800
900.0	54	7	1.162	24600
954.0	42	7	1.155	14200
954.0	20	7	1.185	16700
954.0	45	7	1.165	16700
954.0	48	7	1.175	19700
954.0	24	7	1.196	26000
954.0	54	7	1.196	26000
954.0	30	19	1.248	41100
1033.5	42	7	1.203	15400

Size AWG or kcmil	# Alum Strands	# Steel Strands	Conductor Diameter	Rated Strength (pounds)
1033.5	45	7	1.212	18100
1033.5	48	7	1.222	21300
1033.5	54	7	1.245	28200
1113.0	42	7	1.248	16300
1113.0	45	7	1.259	19500
1113.0	48	7	1.269	23000
1113.0	54	19	1.293	30400
1192.5	42	7	1.292	17500
1192.5	45	7	1.302	20900
1192.5	48	7	1.313	24600
1192.5	54	19	1.338	32600
1272.0	42	7	1.334	18700
1272.0	45	7	1.345	22300
1272.0	48	7	1.357	26200
1272.0	54	19	1.382	34100
1351.5	42	7	1.376	19900
1351.5	45	7	1.386	23700
1351.5	48	7	1.398	27900
1351.5	54	19	1.424	36200
1431.0	42	7	1.415	21000
1431.0	45	7	1.427	25100
1431.0	48	7	1.439	29500
1431.0	54	19	1.465	38400
1510.5	45	7	1.466	26500
1510.5	54	19	1.505	40500
1590.0	42	7	1.492	23400
1590.0	45	7	1.504	27900
1590.0	48	7	1.517	32200
1590.0	54	19	1.545	42600
1780.0	84	19	1.602	35400
1869.0	68	7	1.603	21500
2034.5	72	7	1.681	27200

CABLE DATA (continued)

SOLID COPPERWELD CABLE (ASTM B227)

Conductor Size (AWG)	Nominal Diameter (inches)	Circular Mils	Minimum Breaking Load (pounds)			
			Grade 40 HS	Grade 40 EHS	Grade 30 HS	Grade 30 EHS
4	0.2043	41740	3540	-	3934	4671
5	0.1819	33090	2937	-	3249	3911
-	0.1650*	27230	2779	-	2779	3367
6	0.1620	26240	2679	-	2679	3246
7	0.1443	20820	2207	-	2207	2681
8	0.1285	16510	1816	-	1816	2205
-	0.1280*	16380	1802	-	1802	2188
9	0.1144	13090	1491	-	1491	1790
-	0.1040*	10820	1283	1325	1283	1487
10	0.1019	10380	1231	-	1231	1460
12	0.0808	6530	774	-	774	918
-	0.0800*	6400	759	-	759	900
-	0.0640*	4096	485	-	485	576
18	0.0403	1624	193	-	193	228
-	0.0390*	1521	180	-	180	214
20	0.0320	1024	121	-	121	144

* These diameters are often employed by purchasers for communication lines BUT are not in the American Wire Gauge (B&S Wire Gauge) series, as are the other diameter listed.

STRANDED COPPERWELD CABLE (ASTM B228)

Nominal Diameter† (inch) Size AWG‡	Circular Mils	Diameter* (inch)	Breaking Load (pounds)**		
			High Strength		Extra High Strength
			40% Cond.	30% Cond.	30% Cond.
7/8 (19 No. 5)	628900	.910	50240	55570	66910
13/16 (19 No. 6)	498800	.810	41600	45830	55530
23/32 (19 No. 7)	395500	.721	34390	37740	45850
27/32 (19 No. 8)	313700	.642	28380	31040	37690
9/16 (19 No. 9)	248800	.572	23390	25500	30610
5/8 (7 No. 4)	292200	.613	22310	24780	29430
9/16 (7 No. 5)	231700	.546	18510	20470	24650
1/2 (7 No. 6)	183800	.486	15330	16890	20460
7/16 (7 No. 7)	145700	.433	12670	13910	16890
3/8 (7 No. 8)	115600	.385	10460	11440	13890
11/32 (7 No. 9)	91650	.343	8616	9393	11280
5/16 (7 No. 10)	72680	.306	7121	7758	9196
3 No. 5	99310	.392	8373	9262	11860
3 No. 6	78750	.349	6934	7639	9754
3 No. 7	62450	.311	5732	6291	7922
3 No. 8	49530	.277	4730	5174	6282
3 No. 9	39280	.247	3898	4250	5129
3 No. 10	31150	.220	3221	3509	4160
3 No. 12	19590	.174	2236	-	-

† The designation "inch" is the approximate diameter in proper fraction of an inch.
‡ The designation AWG is a combination of the number of wires each of the American Wire Gauge size indicated by "No."
* Diameter of circumscribing.
** Breaking loads of 7-wire and 19-wire conductors are taken as 90% of the sum of the breaking loads of individual wires; breaking load of 3-wire conductors is taken as 95% of the sum of the breaking loads of the individual wires.

CABLE DATA (continued)

COPPERWELD-COPPER CABLE (ASTM B229)

Conductor size Hard Drawn Copper Equivalent			Nom. Dia. of Conductor (inches)	Min. Breaking Load (pounds)
cmil	AWG	Type		
350000	-	E	0.788	32420
350000	-	EK	0.735	23850
350000	-	V	0.754	23480
300000	-	E	0.729	27770
300000	-	EK	0.680	20960
300000	211600	V	0.698	20730
250000	-	E	0.666	23920
250000	-	EK	0.621	17840
250000	-	V	0.637	17420
	4/0	E	0.613	20730
211600	4/0	G	0.583	15640
211600	4/0	EK	0.571	15370
211600	4/0	V	0.586	15000
211600	4/0	F	0.550	12290
167800	3/0	E	0.545	16800
167800	3/0	J	0.555	16170
167800	3/0	G	0.519	12860
167800	3/0	EK	0.509	12370
167800	3/0	V	0.522	12200
167800	3/0	F	0.490	9980
133100	2/0	K	0.534	17600
133100	2/0	J	0.494	13430
133100	2/0	G	0.463	10510
133100	2/0	V	0.465	9846
133100	2/0	F	0.436	8094
105600	1/0	K	0.475	14490
105600	1/0	J	0.440	10970
105600	1/0	G	0.412	8563
105600	1/0	F	0.388	6536
83690	1	N	0.464	15410
83690	1	K	0.423	11900
83690	1	J	0.392	9000
83690	1	G	0.367	6956
83690	1	F	0.346	5266
66360	2	P	0.462	16870
66360	2	N	0.413	12680
66360	2	K	0.377	9730
66360	2	J	0.349	7322
66360	2	A	0.366	5876
66360	2	G	0.327	5626
66360	2	F	0.308	4233
55620	3	P	0.411	13910
52620	3	N	0.368	10390

Conductor size Hard Drawn Copper Equivalent			Nom. Dia. of Conductor (inches)	Min. Breaking Load (pounds)
cmil	AWG	Type		
52620	3	K	0.336	7910
52620	3	J	0.311	5955
52620	3	A	0.326	4810
41740	4	P	0.366	11420
41740	4	N	0.328	8460
41740	4	D	0.348	7340
41740	4	A	0.290	3938
33090	5	P	0.326	9311
33090	5	D	0.310	6035
33090	5	A	0.258	3193
26240	6	D	0.276	4942
26240	6	A	0.230	2585
26240	6	C	0.225	2143
20820	7	D	0.246	4022
20820	7	A	0.223	2754
16510	8	D	0.219	3256
16510	8	A	0.199	2233
16510	8	C	0.179	1362
11750	9	D	0.174	1743

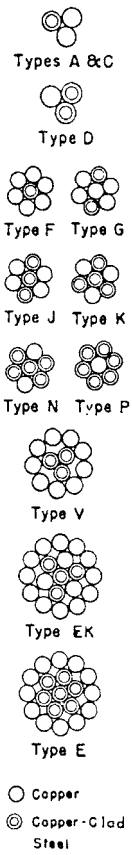

CABLE DATA (continued)

GALVANIZED STEEL CABLE (ASTM A475)

inches	Nom. Dia. of Strand (mm)	Number of Wires in Strand	Minimum Breaking Load (pounds)				
			Utilities Grade	Common Grade	Siemens-Martin Grade	High-Strength Grade	Extra High-Strength Grade
1/8	3.18	7	-	540	910	1330	1830
5/32	3.97	7	-	870	1470	2140	2940
3/16	4.76	7	-	1150	1900	2850	3990
3/16	4.76	7	2400	-	-	-	-
7/32	5.56	3	-	1400	2340	3500	4900
7/32	5.56	7	-	1540	2560	3850	5400
1/4	6.35	3	3150	1860	3040	4730	6740
1/4	6.35	3	4500	-	-	-	-
1/4	6.35	7	-	1900	3150	4750	6650
9/32	7.14	3	-	2080	3380	5260	7500
9/32	7.14	7	4600	2570	4250	6400	8950
5/16	7.94	3	6500	2490	4090	6350	9100
5/16	7.94	7	-	3200	5350	8000	11200
5/16	7.94	7	6000	-	-	-	-
3/8	9.52	3	8500	3330	5560	8360	11800
3/8	9.52	7	11500	4250	6950	10800	15400
7/16	11.11	7	18000	5700	9350	14500	20800
1/2	12.70	7	25000	7400	12100	18800	26900
1/2	12.70	19	-	7620	12700	19100	26700
9/16	14.29	7	-	9600	15700	24500	35000
9/16	14.29	19	-	9640	16100	24100	33700
5/8	15.88	7	-	11600	19100	29600	42400
5/8	15.88	19	-	11000	18100	28100	40200
3/4	19.05	19	-	16000	26200	40800	58300
7/8	22.22	19	-	21900	35900	55800	79700
1	25.40	9	-	28700	47000	73200	104500
1	25.40	37	-	28300	46200	71900	102700
1-1/8	28.58	37	-	36000	58900	91600	130800
1-1/4	31.75	37	-	44600	73000	113600	162200

CABLE DATA (continued)

ALUMINUM-COATED STEEL CABLE (ASTM A474)

Nom. Dia. of Strand (inches)	Number of Wires in Strand	Minimum Breaking Strength (pounds)				
		Utilities Grade*	Common Grade	Siemens-Martin Grade	High-Strength Grade	Extra High-Strength Grade
3/16	7		1150	1900	2850	
3/16	7	2400				
1/4	3	3150				
1/4	3	4500				
1/4	7		1900	3150	4750	6650
9/32	7	4600				
5/16	3	6500				
5/16	7		3200	5350	8000	11200
5/16	7	6000				
3/8	3	8500				
3/8	7	11500	4250	6950	10800	15400
7/16	7	18000	5350	9350	14500	20800
1/2	7	25000	7400	12100	18800	26900

* The Utilities Grade is used principally by communications and power and light industries.

TERMINAL STUD SIZE CHART*

STUD SIZE	#0	#1	#2	#3	#4	#5	#6	#8	#10	#12	#14	1/4"	5/16"	3/8"
Stud Diameter	.060	.073	.086	.090	.112	.125	.138	.164	.190	.216	.242	.250	.312	.375
Stud Hole	.067	.093	.119			.145		.171	.197	.223	.250	17/64	21/64	25/64

STUD SIZE	7/16"	1/2"	5/8"	3/4"	7/8"	1"
Stud Diameter	.437	.500	.625	.750	.875	1.000
Stud Hole	29/64	33/64	21/32	29/32	29/32	1 - 1/32

*Tolerance .003" on decimal and .005" on fractional dimensions

AWG VS. METRIC WIRE SIZES

Circ. Mils	Equivalent Circ. Mils	AWG Size	Metric Wire Size (mm)	Number of Strands	Wire Dia. per Strand		Approx. Overall Diameter	
					inches	mm	inches	mm
-	937	-	.50	1	.032	.813	.032	.81
1020	-	20	-	7	.0121	.307	.036	.91
-	1480	-	.75	1	.039	.091	.039	.99
1620	-	18	-	1	.0103	1.02	.040	1.02
1620	-	18	-	7	.0152	.386	.046	1.16
-	1974	-	1.0	1	.045	1.14	.045	1.14
-	1974	-	1.0	7	.017	.422	.061	1.30
2580	-	16	-	1	.0503	1.29	.051	1.29
2580	-	16	-	7	.0192	.468	.058	1.46
-	2960	-	1.5	1	.055	1.40	.055	1.40
-	2960	-	1.5	7	.021	5.33	.063	1.60
4110	-	14	-	1	.0641	1.63	.064	1.63
4110	-	14	-	7	.0242	.615	.073	1.84
-	4934	-	2.5	1	.071	1.80	.071	1.80
-	4934	-	2.5	7	.027	6.66	.081	2.06
6530	-	12	-	1	.0308	2.05	.081	2.05
6530	-	12	-	7	.0305	.775	.092	2.32
-	7894	-	4	1	.089	2.26	.089	2.26
-	7894	-	4	7	.034	.864	.102	2.59
10380	-	10	-	1	.1019	2.59	.102	2.59
10380	-	10	-	7	.0355	.978	.116	2.93
-	11840	-	6	1	.109	2.77	.109	2.77
-	11840	-	6	7	.042	.107	.126	3.21
13000	-	9	-	1	.1144	2.91	.114	2.91
13090	-	9	-	7	.0432	1.10	.130	3.30
16510	-	8	-	1	.1285	3.26	.128	3.25
16510	-	8	-	7	.0486	1.23	.146	3.70
-	19740	-	10	1	.141	3.58	.141	3.58
-	19740	-	10	7	.054	1.37	.162	4.12
20520	-	7	-	1	.1443	3.67	.144	3.67
20520	-	7	-	7	.0545	1.38	.164	4.15
26240	-	6	-	1	.162	4.11	.162	4.11
26240	-	6	-	7	.0612	1.55	.184	4.66
-	31580	-	16	7	.008	1.73	.204	5.13
33090	-	5	-	7	.0688	1.75	.206	5.24
41740	-	4	-	7	.0772	1.96	.232	5.88
-	49340	-	25	7	.085	2.16	.255	6.48
-	49340	-	25	19	.052	1.32	.260	6.60
52620	-	3	-	7	.0867	2.20	.260	6.61
66300	-	2	-	7	.0974	2.47	.292	7.42
-	69070	-	35	7	.100	2.54	.300	7.62
-	69070	-	35	19	.001	1.55	.305	7.75

AWG VS. METRIC WIRE SIZES (continued)

Circ. Mils	Equivalent Circ. Mils	AWG Size	Metric Wire Size (mm)	Number of Strands	Wire Dia. per Strand		Approx. Overall Diameter	
					inches	mm	inches	mm
83690	-	1	-	19	.0064	1.50	.332	8.43
-	98680	-	50	19	.073	1.85	.365	9.27
105000	-	1/0	-	19	.0745	1.59	.373	9.46
133100	-	2/0	-	19	.0837	2.13	.419	10.6
-	138100	-	70	19	.086	2.18	.430	10.9
167800	-	3/0	-	19	.094	2.59	.470	11.9
167800	-	3/0	-	36	.0673	1.71	.471	12.0
-	187500	-	95	19	.101	2.57	.505	12.8
-	187500	-	95	37	.072	1.83	.504	12.5
211600	-	4/0	-	19	.1055	2.89	.528	13.4
-	237.8 kcmil	-	120	37	.081	2.06	.567	14.4
250 kcmil	-	-	-	37	.0822	2.07	.575	14.6
300 kcmil	-	-	150	37	.090	2.29	.630	16.0
350 kcmil	-	-	-	37	.0973	2.47	.681	17.3
-	365.1 kcmil	-	185	37	.100	2.54	.700	17.8
400 kcmil	-	-	-	37	.104	2.64	.728	18.5
-	473.6 kcmil	-	240	37	.114	2.90	.798	20.3
-	473.6 kcmil	-	240	61	.089	2.26	.801	20.3
500 kcmil	-	-	-	37	.1162	2.95	.813	20.7
500 kcmil	-	-	-	61	.0905	2.30	.814	20.7
-	592.1 kcmil	-	300	61	.099	2.51	.891	22.6
600 kcmil	-	-	-	61	.0992	2.52	.893	22.7
700 kcmil	-	-	-	61	.1071	2.72	.964	24.5
750 kcmil	-	-	-	6	.1109	2.82	.998	25.4
750 kcmil	-	-	-	91	.0908	2.31	.998	25.4
-	789.4 kcmil	-	400	61	.114	2.90	1.026	26.1
800 kcmil	-	-	-	61	.1145	2.91	1.031	26.2
800 kcmil	-	-	-	91	.0938	2.38	1.032	26.2
1000 kcmil	986.8 kcmil	-	500	61	.1280	3.25	1.152	28.3
1000 kcmil	-	-	-	91	.1048	2.66	1.153	29.3
-	1233.7 kcmil	-	625	91	.117	2.97	1.287	32.7
1250 kcmil	-	-	-	91	.1172	2.93	1.289	32.7
1250 kcmil	-	-	-	127	.0992	2.52	1.200	32.8
1500 kcmil	-	-	-	91	.1284	3.26	1.412	36.9
1500 kcmil	-	-	-	127	.1087	2.76	1.413	36.9
-	1578.8 kcmil	-	800	91	.132	3.35	1.452	36.9
-	1973.5 kcmil	-	1000	91	.147	3.73	1.617	41.1
2000 kcmil	-	-	-	127	.1255	3.19	1.632	41.5
2000 kcmil	-	-	-	169	.1088	2.76	1.632	41.5

INCHES & MILLIMETERS CONVERSION CHART

INCHES		MM
1/64	.015625	0.397
1/32	.03125	0.794
3/64	.046875	1.191
1/16	.0625	1.588
5/64	.078125	1.984
3/32	.09375	2.381
7/64	.109375	2.778
1/8	.1250	3.175
9/64	.140625	3.572
5/32	.15625	3.969
11/64	.171875	4.366
3/16	.1875	4.763
13/64	.203125	5.159
7/32	.21875	5.556
15/64	.234375	5.953
1/4	.2500	6.350
17/64	.265625	6.747
9/32	.28125	7.144
19/64	.296875	7.541
5/16	.3125	7.938
21/64	.328125	8.334
11/32	.34375	8.731
23/64	.359375	9.128
3/8	.3750	9.525
25/64	.390625	9.922
13/32	.40625	10.319
27/64	.421875	10.716
7/16	.4375	11.113
29/64	.453125	11.509
15/32	.46875	11.906
31/64	.484375	12.303
1/2	.5000	12.700

INCHES		MM
33/64	.515625	13.097
17/32	.53125	13.494
35/64	.546875	13.891
9/16	.5625	14.288
37/64	.578125	14.684
19/32	.59375	15.081
39/64	.609375	15.478
5/8	.6250	15.875
41/64	.640625	16.272
21/32	.65625	16.669
43/64	.671875	17.066
11/16	.6875	17.463
45/64	.703125	17.859
23/32	.71875	18.256
47/64	.734375	18.653
3/4	.7500	19.050
49/64	.765625	19.447
25/32	.78125	19.844
51/64	.796875	20.241
13/16	.8125	20.638
53/64	.828125	21.034
27/32	.84375	21.431
55/64	.859375	21.828
7/8	.8750	22.225
57/64	.890625	22.622
29/32	.90625	23.019
59/64	.921875	23.416
15/16	.9375	23.813
61/64	.953125	24.209
31/32	.96875	24.606
63/64	.984375	25.003
1	1.000	25.400

MM	INCHES	MM	INCHES
.1	.0039	46	1.8110
.2	.0079	47	1.8504
.3	.0118	48	1.8898
.4	.0157	48	1.9291
.5	.0197	50	1.9685
.6	.0236	51	2.0079
.7	.0276	52	2.0472
.8	.0315	53	2.0866
.9	.0354	54	2.1260
1	.0394	55	2.1654
2	.0787	56	2.2047
3	.1181	57	2.2441
4	.1575	58	2.2835
5	.1969	59	2.3228
6	.2362	60	2.3622
7	.2756	61	2.4016
8	.3150	62	2.4409
9	.3543	63	2.4803
10	.3937	64	2.5197
11	.4331	65	2.5591
12	.4724	66	2.5984
13	.5118	67	2.6378
14	.5512	68	2.6772
15	.5906	69	2.7165
16	.6299	70	2.7559
17	.6693	71	2.7953
18	.7087	72	2.8346
19	.7480	73	2.8740
20	.7874	74	2.9134
21	.8268	75	2.9528
22	.8661	76	2.9921
23	.9055	77	3.0315
24	.9449	78	3.0709
25	.9843	79	3.1102
26	1.0236	80	3.1496
27	1.0630	81	3.1890
28	1.1024	82	3.2283
29	1.1417	83	3.2677
30	1.1811	84	3.3071
31	1.2205	85	3.3465
32	1.2598	86	3.3858
33	1.2992	87	3.4252
34	1.3386	88	3.4646
35	1.3780	89	3.5039
36	1.4173	90	3.5433
37	1.4567	91	3.5827
38	1.4961	92	3.6220
39	1.5354	93	3.6614
40	1.5748	94	3.7008
41	1.6142	95	3.7402
42	1.6535	96	3.7795
43	1.6929	97	3.8189
44	1.7323	98	3.8583
45	1.7717	99	3.8976
		100	3.9370

BURNDY CONDUCTOR NUMBERING SYSTEM - © BURNDY ENGINEERING CO., INC., 1940

Outside Dia. IN	Outside Dia. MM	STR. CABLE		SOL. WIRE		AREA MM² Copper Cable	ACSR		PIPE SIZE CONDUCTOR				TUBE & ROD		SERVIT NO.
		Cat. No.	Size	Cat. No.	Size		Cat. No.	Cable Size	Cat. No.	ST D	Cat No.	Ex Hvy	Cat. No.	Dia.	
.102	2.594			**10W**	10	5.261									**KS90**
.114	2.896			**9W**	9	6.634									
.116	2.946	**10 C**	10			5.261									
.125	3.175												**60**	1/8	
.129	3.277			**8W**	8	8.366									**KS15**
.130	3.302	**9 C**	9			6.634									
.144	3.658			**7W**	7	10.550									
.146	3.708	**8 C**	8			8.366									
.158	4.013						**8R**	8							
.162	4.115			**6W**	6	13.300									**KS17**
.164	4.166	**7 C**	7			10.550									
.176	4.470						**7R**	7							
.182	4.597			**5W**	5	16.770									
.184	4.648	**6 C**	6			13.300									
.198	5.029						**6R**	6							
.204	5.182			**4W**	4	21.150									**KS20**
.206	5.258	**5 C**	5			16.770									
.223	5.664						**5R**	5							
.229	5.817			**3W**	3	26.670									
.232	5.867	**4 C**	4			21.150									
.250	6.350						**4R**	4					**61**	1/4	
.258	6.553			**2W**	2	33.630									**KS22**
.260	6.629	**3 C**	3			2.6670									
.281	7.137						**3R**	3							
.289	7.344			**1W**	1	42.410									
.292	7.394	**2 C**	2			33.630									**KS23**
.316	8.026						**2R**	2							
.325	8.255			**75**	1/0	53.480									
.332	8.382	**1 C**	1			42.410									
.355	9.017						**1R**	1							
.365	9.274			**76**	2/0	67.430									
.372	9.474	**25**	1/0			53.480									**KS25**
.375	9.525												**62**	3/8	
.398	10.109						**25R**	1/0							
.405	10.287								**10**	1/8	**50**	1/8			
.410	10.414			**77**	3/0	85.030									
.419	10.617	**26**	2/0			67.430									**KS26**
.447	11.354						**26R**	2/0							
.460	11.684			**78**	4/0	107.200									
.470	11.938	**27**	3/0			85.030									
.500	12.700												**63**	1/2	
.502	12.725						**27R**	3/0							
.528	13.414	**28**	4/0			107.200									**KS28**
.540	13.716								**11**	1/4	**51**	1/4			
.563	14.326						**28R**	4/0							
.575	14.605	**29**	250			127.000									
.630	16.002	**30**	300			152.000									
.633	16.078						**29R**	266,800							
.642	16.307						**30R**	266,800							
.675	17.145								**12**	3/8	**52**	3/8			
.680	17.272						**31R**	300,000							
.681	17.297	**31**	350			177.000									**KS31**
.721	18.313						**32R**	336,400							
.728	18.494	**32**	400			203.000									
.741	18.824						**33R**	336,400							
.750	19.050												**64**	3/4	
.772	19.609	**33**	450			228.000									
.783	19.888						**34R**	397,500							
.806	20.472						**35R**	397,500							
.813	20.676	**34**	500			253.000									
.840	21.336								**13**	1/2	**53**	1/2			
.855	21.717	**35**	550			279.000									**KS34**
.858	21.742						**36R**	477,000							
.883	22.428						**37R**	477,000							
.893	22.682	**36**	600			304.000									
.904	22.962						**38R**	500,000							
.927	23.546						**39R**	556,500							
.929	23.597	**37**	650			329.000									
.953	24.206						**40R**	556,500							
.953	24.206						**41R**	605,000							
.964	24.486	**38**	700			355.000									
.977	24.714						**42R**	636,000							
.998	25.349	**39**	750			380.000									**KS39**
1.000	25.400						**43R**	666,600					**65**	1	

BURNDY CONDUCTOR NUMBERING SYSTEM (continued)

Outside Dia. IN	Outside Dia. MM	STR. CABLE		SOL. WIRE		AREA MM² Copper Cable	ACSR		PIPE SIZE CONDUCTOR				TUBE & ROD		SERVIT NO.
		Cat. No.	Size	Cat. No.	Size		Cat. No.	Cable Size	Cat. No.	ST D	Cat No.	Ex Hvy	Cat. No.	Dia.	
1.031	26.187	**40**	800			405.000									
1.036	26.314						**44R**	715,500							
1.050	26.670								**14**		**54**				
1.062	26.975	**41**	850			431.000									
1.094	27.762	**42**	900			456.000	**45R**	795,000							
1.123	28.524	**43**	950			481.000									
1.146	29.108						**46R**	874,000							
1.152	29.264	**44**	1000			507.000									**KS44**
1.162	29.515						**47R**	900,000							
1.196	30.378						**48R**	954,000							
1.209	30.709	**444**	1100			557.000									
1.246	31.648						**49R**	1,033,500							
1.250	31.750												**66**	1	
1.263	32.080	**448**	1200			608.000									
1.289	32.744	**45**	1250			633.000									
1.293	32.817						**50R**	1,113,000							
1.315	33.404	**452**	1300						**15**	1	**55**	1			
1.338	33.960						**51R**	1,192,500							
1.364	34.646	**456**	1400			709.000									
1.382	35.103						**52R**	1,272,000							
1.412	35.865	**46**	1500			760.000									
1.424	36.170						**53R**	1,351,500							
1.459	37.059	**464**	1600			811.000									
1.465	37.214						**54R**	1,431,000							
1.500	38.100												**67**	1-1/2	
1.504	38.202	**468**	1700			861.000									
1.506	38.252						**55R**	1,510,500							
1.526	38.786	**47**	1750			866.000									
1.545	39.218						**56R**	1,590,000							
1.548	39.319	**472**	1800			912.000									
1.590	40.386	**476**	1900			963.000									
1.632	41.427	**48**	2000			1013.00									
1.660	42.164								**16**	1	**56**	1			
1.729	43.917	**483**	2250			1140.000									
1.824	46.330	**486**	2500			1267.000									
1.900	48.260								**17**	1-1/2	**57**	1-1/2			
1.914	48.616	**490**	2750			1393.000									
1.988	50.495	**493**	3000			1520.000									
2.000	50.800												**68**	2	
2.375	60.325								**18**	2	**58**	2			
2.500	63.500												**69**	2-1/2	
2.875	73.025								**19**	2-1/2	**59**	2-1/2			
3.000	76.200												**70**	3	
3.500	88.900								**20**	3	**90**	3	**71**	3-1/2	
4.000	101.600								**21**	3-1/2	**91**	3-1/2	**72**	4	
4.500	114.300								**22**	4	**92**	4	**73**	4-1/2	
5.000	127.000								**23**	4-1/2	**93**	4-1/2	**74**	5	
5.563	141.300								**24**	5	**94**	5			
6.063	154.000								**85**	5-1/2	**95**	5-1/2			
6.625	168.275								**86**	6	**96**	6			
7.625	193.675								**87**	7	**97**	7			
8.625	219.075								**88**	8	**98**	8			

PRESENT INSTALLATION TOOL INDEX

This chart provides a cross-reference between die index numbers marked on **BURNDY® COMPRESSION CONNECTORS** and the **CORRESPONDING DIE SETS** used with the various **BURNDY® INSTALLATION TOOLS.** This is the only way to have a complete connections with the **BURNDY® ENGINEERED SYSTEM**.

A die index number has been assigned to each required groove configuration. A prefix letter is used to indicate the specific installation tool for which the die has been designed, as shown.

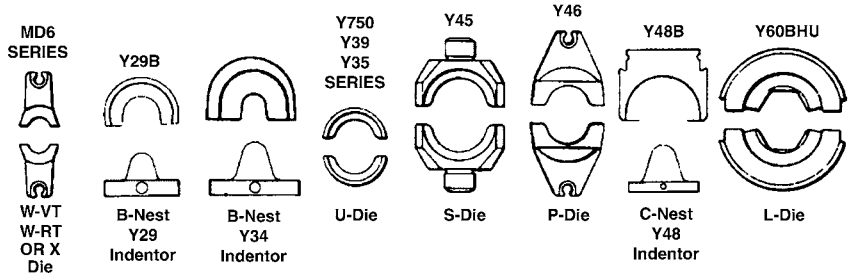

U 34 ART

- ART — USE CHART (CHART III)
- 34 — WIRE SIZE (CHART II) OR INDEX
- U — TOOL TYPE (CHART I)

CHART I

A - Y34A	E - Y44B	P - Y46	X - OUR840/MD-6
B - Y34BH	F - Y486RB	S - Y45	
C - Y48B	G - Y34C	U - Y35	
	L - Y60B	W - MD-6/OUR840	

CHART II

12 - #12	4C - #4	26 - 2/0	31 - 350 MCM	OR INDEX
10 - #10	3C - #3	27 - 3/0	32 - 400 MCM	i.e., U312
8C - # 8	2C - #2	28 - 4/0	34 - 500 MCM	312 Die Index
6C - # 6	1C - #1	29 - 250 MCM	36 - 600 MCM	
5C - # 5	25 - 1/0	30 - 300 MCM	39 - 750 MCM	
			44 - 1000 MCM	

CHART III

A - ALUMINUM
B - INDENTOR NEST (USED WITH INDENTOR DIE # Y34P**)
R - ROUND DIE (CIRCUMFERENTAL)
T - TWIN DIE (BOTH HALVES)

PRESENT INSTALLATION TOOL INDEX (continued)

DIE		DIELESS TOOLS		INSTALLATION TOOLING USING DIES										
GROOVE		MECH.	HYD.	DIE INFORMATION		MECHANICAL		HYDRAULIC						
BURNDY	EEI	MR, MY	Y644	TYPE	COLOR	MD6	OUR840	Y29B⑤	Y35①	Y39	Y750①	Y45②	Y46③	Y60 Ser.
A				DIE SET					U-A	U-A	U-A	U-A	U-A	
BG				DIE SET		Perm. GR W-BG	X-BG X-NBG		U-BG	U-BG	U-BG	U-BG	U-BG	
C				DIE SET	BROWN	W-C			U-C	U-	U-C	U-C	U-C	
D				DIE SET					U-D	U-D	U-D	U-D	U-D	
D3				DIE SET	BLUE				U-YFD	U-YFD	U-YFD	U-YFD	U-YFD	
						Perm. GR			U-D3	U-D3	U-D3	U-D3	U-D3	
E				DIE SET					U-E	U-E	U-E	U-E	U-E	
F				DIE SET					U-F	U-F	U-F	U-F	U-F	
H				DIE SET					U-H	U-H	U-H	U-H	U-H	
K-1/4				DIE SET		WK14								
K-5/16				DIE SET		WK516			UK516T	UK526T	UK516T	UK516T	UK516T	
K-3/8				DIE SET		WK38			UK38T	UK38T	UK38T	UK38T	UK38T	
K-1/2				DIE SET		WK12								
K-9/16				DIE SET		WK916			UK916T	UK916T	UK916T	UK916T	UK916T	
K-19/32				DIE SET		WK1932								
K-5/8-1				DIE SET					UK581T	UK581T	UK581T	UK581T	UK581T	
K-11/16				DIE SET		WK1116			UK1116T	UK1116T	UK1116T	UK1116T	UK1116T	
K-3/4				DIE SET					UK34T	UK34T	UK34T	UK34T	UK34T	
K-1				DIE SET					UK1T	UK1T	UK1T	UK1T	UK1T	
K-1-5/16				DIE SET					UK1516T	UK1516T	UK1516T	UK1516T	UK1516T	
K-635				DIE SET		WK737			UK737T	UK737T	UK737T	UK737T	UK737T	
K-747				DIE SET		WK747								
K-781				DIE SET		WK781								
K-840				DIE SET		W-K840			U-K840	U-K840	U-K840	U-K840	U-K840	
KB				DIE SET		WKB			UKBT	UKBT	UKBT	UKBT	UKBT	
KBKT				DIE SET					UKBKTT	UKBKTT	UKBKTT	UKBKTT	UKBKTT	
KC				DIE SET					UKCT	UKCT	UKCT	UKCT	UKCT	
KK				DIE SET		WKK								
KR				DIE SET	YELLOW								P-YFR	
												S-KR	P-KR	
KT				DIE SET		WKT								
KU				DIE SET					UKUT	UKUT	UKUT	UKUT	UKUT	
L				DIE SET		W-L			U-L	U-L	U-L	U-L	U-L	
L80				DIE SET					U32XRT	U32XRT	U32XRT	U32XRT	U32XRT	
L99				DIE SET	PINK				U38XRT	U38XRT	U38XRT	U38XRT	U38XRT	
L115				DIE SET	YELLOW				U44XRT	U44XRT	U44XRT	U44XRT	U44XRT	
M				DIE SET					U-M	U-M	U-M	U-M	U-M	
N				DIE SET	RED				U-YFN	U-YFN	U-YFN	U-YFN	U-YFN	
									U-N	U-N	U-N	U-N	U-N	
O				DIE SET	GREEN				U-YFO	U-YFO	U-YFO	U-YFO	U-YFO	
						Perm. GR W-O			U-O	U-O	U-O	U-O	U-O	
Q				DIE SET		W-Q								

①Cat. No. Y35P3 Adaptor is required to use "Y34PR" type indentors with "U" type nest dies in Y35 and Y750 series.
②Cat. No. PT6515 Adaptor is required to use "U" type dies in Y45 series.
③Cat. No. PUADP-1 Adaptor is required to use "U" type dies in Y46 series.
④The MD6-6R2 ratchet tool is required on these sizes. The standard MD6 or MD6R ratchet tools will not work.
⑤Also pneumatic version Y29NC.

PRESENT INSTALLATION TOOL INDEX (continued)

DIE		DIELESS TOOLS		INSTALLATION TOOLING USING DIES										
GROOVE		MECH.	HYD.	DIE INFORMATION		MECHANICAL		HYDRAULIC						
BURNDY	EEI	MR, MY	Y644	TYPE	COLOR	MD6	OUR840	Y29B ⑤	Y35 ①	Y39	Y750 ①	Y45 ②	Y46 ③	Y60 Ser.
R				DIE SET					U-R	U-R	U-R	U-R	U-R	
T				DIE SET								S-T		
Z				DIE SET								S-Z		
7 94		MR4C MY29-3 MY29-11	1 CRIMP	DIE SET	BLUE	W5CRT	X5CRT		U5CRT	U5CRT	U5CRT	U5CRT	U5CRT	
				NEST				D6CL	U6CD-1	U6CD-1	U6CD-1	U6CD-1	U6CD-1	
				INDENTOR				Y29PR	Y34PR	Y34PR	Y34PR	Y34PR	Y34PR	
8 95		MR4C MY29-3 MY29-11	1 CRIMP	DIE SET	GRAY	W4CRT	X4CRT		U4CRT	U4CRT	U4CRT	U4CRT	U4CRT	
				NEST				D4CL	U4CD-1	U4CD-1	U4CD-1	U4CD-1	U4CD-1	
				INDENTOR				Y29PR	Y34PR	Y34PR	Y34PR	Y34PR	Y34PR	
9 96		MY29-3 MY29-11	1 CRIMP	DIE SET	WHITE	W3CRT	X3CRT		U3CRT	U3CRT	U3CRT	U3CRT	U3CRT	
				NEST				D3CL	U3CD-1	U3CD-1	U3CD-1	U3CD-1	U3CD-1	
				INDENTOR				Y29PR	Y34PR	Y34PR	Y34PR	Y34PR	Y34PR	
10 97		MY29-3 MY29-11	1 CRIMP	DIE SET	BROWN	W2CRT	X2CRT		U2CRT	U2CRT	U2CRT	U2CRT	U2CRT	
				NEST				D2CL	U2CD-1	U2CD-1	U2CD-1	U2CD-1	U2CD-1	
				INDENTOR				Y29PR	Y34PR	Y34PR	Y34PR	Y34PR	Y34PR	
11 98		MY29-3 MY29-11	1 CRIMP	DIE SET	GREEN	W1CRT-1	X1CRT-1		U1CRT-1	U1CRT-1	U1CRT-1	U1CRT-1	U1CRT-1	
				NEST				D1CL	U1CD-1	U1CD-1	U1CD-1	U1CD-1	U1CD-1	
				INDENTOR				Y29PR	Y34PR	Y34PR	Y34PR	Y34PR	Y34PR	
12 99		MY29-3 MY29-11	1 CRIMP	DIE SET	PINK	W25RT	X25RT		U25RT	U25RT	U25RT	U25RT	U25RT	
				NEST				D25L	U25D-1	U25D-1	U25D-1	U25D-1	U25D-1	
				INDENTOR				Y29PL	Y34PR	Y34PR	Y34PR	Y34PR	Y34PR	
13 100		MY29-3 MY29-11	1 CRIMP	DIE SET	BLACK	W26RT	X26RT		U26RT	U26RT	U26RT	U26RT	U26RT	
				NEST				D26L	U26D-1	U26D-1	U26D-1	U26D-1	U26D-1	
				INDENTOR				Y29PR	Y34PR	Y34PR	Y34PR	Y34PR	Y34PR	
14 101		MY29-3 MY29-11	1 CRIMP	DIE SET	ORANGE	W27RT	X27RT		U27RT	U27RT	U27RT	U27RT	U27RT	
				NEST				D27L	U27D-1	U27D-1	U27D-1	U27D-1	U27D-1	
				INDENTOR				Y29PR	Y34PR	Y34PR	Y34PR	Y34PR	Y34PR	
15		MY29-3 MY29-11	1 CRIMP	DIE SET	PURPLE	W28RT	X28RT		U28RT	U28RT	U28RT	U28RT	U28RT	
				NEST				D28L	U28D-1	U28D-1	U28D-1	U28D-1	U28D-1	
				INDENTOR				Y29PR	Y34PR	Y34PR	Y34PR	Y34PR	Y34PR	
16		MY29-3 MY29-11	1 CRIMP	DIE SET	YELLOW	W29RT④	X29RT		U29RT	U29RT	U29RT	U29RT	U29RT	
				NEST				D29L		U29D-1	U29D-1	U29D-1	U29D-1	
				INDENTOR				Y29PR		Y34PR	Y34PR	Y34PR	Y34PR	
17			1 CRIMP	DIE SET	WHITE	W30RT④			U30RT	U30RT	U30RT	U30RT	U30RT	L30RT
				NEST						U30D-1	U30D-1	U30D-1	U30D-1	
				INDENTOR						Y34PR	Y34PR	Y34PR	Y34PR	
18			1 CRIMP	DIE SET	RED	W31RT④			U31RT	U31RT	U31RT	U31RT	U31RT	L31RT
				NEST						U31D-1	U31D-1	U31D-1	U31D-1	
				INDENTOR						Y34PR	Y34PR	Y34PR	Y34PR	
19			1 CRIMP	DIE SET	BLUE	W32RT④			U32RT	U32RT	U32RT	U32RT	U32RT	L32RT
				NEST						U32D-1	U32D-1	U32D-1	U32D-1	
				INDENTOR						Y34PR	Y34PR	Y34PR	Y34PR	

①Cat. No. Y35P3 Adaptor is required to use "Y34PR" type indentors with "U" type nest dies in Y35 and Y750 series.
②Cat. No. PT6515 Adaptor is required to use "U" type dies in Y45 series.
③Cat. No. PUADP-1 Adaptor is required to use "U" type dies in Y46 series.
④The MD6-6R2 ratchet tool is required on these sizes. The standard MD6 or MD6R ratchet tools will not work.
⑤Also pneumatic version Y29NC.

PRESENT INSTALLATION TOOL INDEX (continued)

DIE		DIELESS TOOLS		INSTALLATION TOOLING USING DIES										
GROOVE		MECH.	HYD.	DIE INFORMATION		MECHANICAL		HYDRAULIC						
BURNDY	EEI	MR, MY	Y644	TYPE	COLOR	MD6	OUR840	Y29B ⑤	Y35 ①	Y39	Y750 ①	Y45 ②	Y46 ③	Y60 Ser.
20			1 CRIMP	DIE SET	BROWN	W34RT④			U34RT	U34RT	U34RT	U34RT	U34RT	L34RT
				NEST						U34D-1	U34D-1	U34D-1	U34D-1	
				INDENTOR						Y34PR	Y34PR	Y34PR	Y34PR	
21			1 CRIMP	DIE SET	YELLOW					U35RT	U35RT	U35RT	U35RT	
				NEST										
				INDENTOR										
22			1 CRIMP	DIE SET	GREEN					U36RT	U36RT	U36RT	U36RT	L36RT
				NEST									P36D	
				INDENTOR									P44PR	
23			1 CRIMP	DIE SET	ORANGE					U37RT	U37RT	U37RT	U37RT	
				NEST										
				INDENTOR										
24			1 CRIMP	DIE SET	BLACK					U39RT	U39RT	S39RT	P39RT	L39RT
				NEST									P39D	
				INDENTOR									P44PR	
25			1 CRIMP	DIE SET	ORANGE							S40RT	P40RT	
				NEST									P40D	
				INDENTOR									P44PR	
26			1 CRIMP	DIE SET	GOLD									
				NEST										
				INDENTOR										
27			1 CRIMP	DIE SET	WHITE							S44RT	P44RT	L44RT
				NEST									P44D	
				INDENTOR									P44PR	
29				DIE SET	YELLOW								P45RT	L45RT
				NEST										
				INDENTOR										
30				DIE SET	ORANGE									
				NEST										
				INDENTOR										
31				DIE SET	GREEN							S46RT	P46RT	L46RT
				NEST									No Nest	
				INDENTOR									P44PR	
33				DIE SET	GRAY									L47RT
				NEST										
				INDENTOR										
34				DIE SET	BROWN									L48RT
				NEST										
				INDENTOR										
38		MR4C MR8G98 MR89Q MY28 Y8MRB-1		NEST				DV8L	UV8L	UV8L	UV8L	UV8L	UV8L	
				INDENTOR				Y29PL	Y34PL	Y34PL	Y34PL	Y34PL	Y34PL	

①Cat. No. Y35P3 Adaptor is required to use "Y34PR" type indentors with "U" type nest dies in Y35 and Y750 series.
②Cat. No. PT6515 Adaptor is required to use "U" type dies in Y45 series.
③Cat. No. PUADP-1 Adaptor is required to use "U" type dies in Y46 series.
④The MD6-6R2 ratchet tool is required on these sizes. The standard MD6 or MD6R ratchet tools will not work.
⑤Also pneumatic version Y29NC.

PRESENT INSTALLATION TOOL INDEX (continued)

DIE		DIELESS TOOLS		INSTALLATION TOOLING USING DIES										
GROOVE		MECH.	HYD.	DIE INFORMATION		MECHANICAL		HYDRAULIC						
BURNDY	EEI	MR, MY	Y644	TYPE	COLOR	MD6	OUR840	Y29B ⑤	Y35 ①	Y39	Y750 ①	Y45 ②	Y46 ③	Y60 Ser.
39		MR4C MY28	1 CRIMP	NEST				DV6L	UV6L	UV6L	UV6L	UV6L	UV6L	
				INDENTOR				Y29PL	Y34PLA	Y34PLA	Y34PLA	Y34PLA	Y34PLA	
40		MR4C MY28		NEST				DV4L	UV4L	UV4L	UV4L	UV4L	UV4L	
				INDENTOR				Y29PL	Y34PLA	Y34PLA	Y34PLA	Y34PLA	Y34PLA	
41		MY28		NEST				DV2L	UV2;	UV2;	UV2;	UV2;	UV2;	
				INDENTOR				Y29PL	Y34PLA	Y34PLA	Y34PLA	Y34PLA	Y34PLA	
42		MY28		NEST				DV1L	UV1L	UV1L	UV1L	UV1L	UV1L	
				INDENTOR				Y29PL	Y34PLA	Y34PLA	Y34PLA	Y34PLA	Y34PLA	
43		MY28		NEST				DV25L	UV25L	UV25L	UV25L	UV25L	UV25L	
				INDENTOR				Y29PL	Y34PA	Y34PA	Y34PA	Y34PA	Y34PA	
44		MY28		NEST				DV26L	UV26L	UV26L	UV26L	UV26L	UV26L	
				INDENTOR				Y29PL	Y34PA	Y34PA	Y34PA	Y34PA	Y34PA	
45		MY28		NEST					UV27L	UV27L	UV27L	UV27L	UV27L	
				INDENTOR					Y34PA	Y34PA	Y34PA	Y34PA	Y34PA	
46		MY28		NEST					UV28L	UV28L	UV28L	UV28L	UV28L	
				INDENTOR					Y34PA	Y34PA	Y34PA	Y34PA	Y34PA	
49				DIE SET	RED	W8CRT	X8CRT		U8CRT	U8CRT	U8CRT	U8CRT	U8CRT	
161				DIE SET		W161	X-161		U161	U161	U161	U161	U161	
162				DIE SET		W162	W162		U162	U162	U162	U162	U162	
163 505				DIE SET		W163	W163		U163	U163	U163	U163	U163	
164 275				DIE SET		W164			U164	U164	U164	U164	U164	
165 205 287 339				DIE SET		W165	X-165		U165/ U205	U165/ U205	U165/ U205	U165/ U205	U165/ U205	L165
166 206 459				DIE SET		W166			U166/ U459	U166/ U459	U166/ U459	U166/ U459	U166/ U459	L166
167 207 211 256 568				DIE SET		W167			U167/ U568	U167/ U568	U167/ U568	U167/ U568	U167/ U568	L167
168 208				DIE SET					U168	U168	U168	U168	U168	L168
169				DIE SET					U169	U169	U169	U169	U169	L169
170 306				DIE SET					U170	U170	U170	U170	U170	L170
171				DIE SET		W161			U171	U171	U171	U171	U171	
193				DIE SET					U193	U193	U193	U193	U193	L193
202				DIE SET					U202	U202	U202	U202	U202	
203				DIE SET					U203	U203	U203	U203	U203	
204				DIE SET					U204	U204	U204	U204	U204	
205 165 287 339				DIE SET		W165	X-165		U165/ U205	U165/ U205	U165/ U205	U165/ U205	U165/ U205	L165
206 166 459				DIE SET		W166			U166/ U459	U166/ U459	U166/ U459	U166/ U459	U166/ U459	L166
207 167 211 256 568				DIE SET		W167			U167/ U568	U167/ U568	U167/ U568	U167/ U568	U167/ U568	L167
208 168				DIE SET					U168	U168	U168	U168	U168	L168
209				DIE SET					U209	U209	U209	U209	U209	L209
210				DIE SET					U210	U210	U210	U210	U210	L210

①Cat. No. Y35P3 Adaptor is required to use "Y34PR" type indentors with "U" type nest dies in Y35 and Y750 series.
②Cat. No. PT6515 Adaptor is required to use "U" type dies in Y45 series.
③Cat. No. PUADP-1 Adaptor is required to use "U" type dies in Y46 series.
⑤Also pneumatic version Y29NC.

PRESENT INSTALLATION TOOL INDEX (continued)

DIE		DIELESS TOOLS		INSTALLATION TOOLING USING DIES									
GROOVE		MECH.	HYD.	DIE INFORMATION		MECHANICAL		HYDRAULIC					
BURNDY	EEI	MR, MY	Y644	TYPE	COLOR	MD6	OUR840	Y35 ①	Y39	Y750 ①	Y45 ②	Y46 ③	Y60 Ser.
211 167 256 568				DIE SET		W167		U167/ U568	U167/ U568	U167/ U568	U167/ U568	U167/ U568	L167
236				DIE SET		W236		U236	U236	U236	U236	U236	
237				DIE SET		W237	X-237	U237	U237	U237	U237	U237	
238				DIE SET		W238		U238	U238	U238	U238	U238	
239				DIE SET		W239	X-239	U239	U239	U239	U239	U239	
240				DIE SET	RED	W240		U240	U240	U240	U240	U240	
241				DIE SET		W241	X-241	U241	U241	U241	U241	U241	
242 244	3S/4S			DIE SET		W242		U242	U242	U242	U242	U242	L242
243				DIE SET		W243		U243	U243	U243	U243	U243	L243
244 242	3S/4S			DIE SET		W242		U242	U242	U242	U242	U242	L242
245	9A			DIE SET		W245	X-245	U245	U245	U245	U245	U245	L245
246 248	5S			DIE SET		W248		U248	U248	U248	U248	U248	L248
247				DIE SET		W247	X-247	U247	U247	U247	U247	U247	L247
248 246	5S			DIE SET		W248		U248	U248	U248	U248	U248	L248
249	11A			DIE SET		W249	X-249	U249	U249	U249	U249	U249	L249
250				DIE SET				U250	U250	U250	U250	U250	L250
251	12A			DIE SET	RED	W251		U251	U251	U251	U251	U251	L251
252				DIE SET				U252	U252	U252	U252	U252	L252
253				DIE SET				U253	U253	U253	U253	U253	L253
254				DIE SET							S254	P254	L254
255				DIE SET				U255	U255	U255	U255	U255	L255
256 167 207 211 568				DIE SET		W167		U167/ U567	U167/ U567	U167/ U567	U167/ U567	U167/ U567	L167
257				DIE SET				U257	U257	U257	U257	U257	L257
259				DIE SET				U259	U259	U259	U259	U259	
260				DIE SET									L260
261 318	15A			DIE SET				U261	U261	U261	U261	U261	L261
263				DIE SET				U263	U263	U263	U263	U263	
267				DIE SET				U267	U267	U267	U267	U267	L267
275 164				DIE SET		W164		U164	U164	U164	U164	U164	
276				DIE SET				U276	U276	U276	U276	U276	
285				DIE SET				U285	U285	U285	U285	U285	
287 165 205 339				DIE SET		W165		U165/ U205	U165/ U205	U165/ U205	U165/ U205	U165/ U205	L165
292 578				DIE SET							S292	P292	L292
293 294				DIE SET							S293	P293	L293
296		MY29-3	1 CRIMP	DIE SET	TAN		X25ART	U25ART	U25ART	U25ART	U25ART		
				NEST							P27D		
				INDETOR							P34PR5		
297		MY29-3	1 CRIMP	DIE SET	OLIVE		X26ART	U26ART	U26ART	U26ART	U26ART		
				NEST							P29D		
				INDENTOR							P34PR5		

①Cat. No. Y35P3 Adaptor is required to use "Y34PR" type indentors with "U" type nest dies in Y35 and Y750 series.
②Cat. No. PT6515 Adaptor is required to use "U" type dies in Y45 series.
③Cat. No. PUADP-1 Adaptor is required to use "U" type dies in Y46 series.

PRESENT INSTALLATION TOOL INDEX (continued)

DIE		DIELESS TOOLS		INSTALLATION TOOLING USING DIES									
GROOVE		MECH.	HYD.	DIE INFORMATION		MECHANICAL		HYDRAULIC					
BURNDY	EEI	MR, MY	Y644	TYPE	COLOR	MD6	OUR840	Y35 ①	Y39	Y750 ①	Y45 ②	Y46 ③	Y60 Ser.
298		MY29-3	1 CRIMP	DIE SET	WHITE		X28ART	U28ART	U28ART	U28ART	U28ART	U28ART	L28ART
				NEST								P31D	
				INDENTOR								Y45PR5	
299			1 CRIMP	DIE SET	BROWN			U31ART	U31ART	U31ART	U31ART	U31ART	L31ART
				NEST								P35D	
				INDENTOR								P48PR1	
300			1 CRIMP	DIE SET	PINK			U34ART	U34ART	U34ART	U34ART	U34ART	L34ART
				NEST								P39D	
				INDENTOR								P49PR1	
301			1 CRIMP	DIE SET	RED						S39ART	P39ART	L39ART
				NEST								P45D	
				INDENTOR								P48PR1	
302			1 CRIMP	DIE SET	BROWN						S44ART	P44ART	L44ART
				NEST								No Nest	
				INDENTOR								P48PR1	
303				DIE SET	GRAY			U42ART	U42ART	U42ART	U42ART	U42ART	
304				DIE SET				U304	U304	U304	U304	U304	L304
305 341				DIE SET				U305	U305	U305	U305	U305	L305
306 170				DIE SET				U170	U170	U170	U170	U170	L170
308				DIE SET				U308	U308	U308	U308	U308	
313				DIE SET				U313	U313	U313	U313	U313	L313
314 376				DIE SET									L314
316				DIE SET				U316	U316	U316	U316	U316	L316
317 426				DIE SET				U317	U317	U317	U317	U317	L317
318 261				DIE SET				U261	U261	U261	U261	U261	L261
319				DIE SET							S319	P319	L319
320				DIE SET							S320	P320	L320
321				DIE SET				U321	U321	U321	U321	U321	L321
322				DIE SET				U322	U322	U322	U322	U322	
324			1 CRIMP	DIE SET	RED			U29ART	U29ART	U29ART	U29ART	U29ART	L29ART
				NEST								P32D	
				INDENTOR								P34PR5	
326 538				DIE SET				U33RT	U33RT	U33RT	U33RT	U33RT	
327	14A			DIE SET				U327	U327	U327	U327	U327	L327
328				DIE SET									L328
329				DIE SET				U329	U329	U329	U329	U329	
331				DIE SET				U331	U331	U331	U331	U331	
339 165 205 287				DIE SET			X-339	U165/ U205	U165/ U205	U165/ U205	U165/ U205	U165/ U205	
341 305				DIE SET				U305	U305	U305	U305	U305	L305
342				DIE SET							S342	P342	L342
344				DIE SET									L344
345				DIE SET									L345

①Cat. No. Y35P3 Adaptor is required to use "Y34PR" type indentors with "U" type nest dies in Y35 and Y750 series.
②Cat. No. PT6515 Adaptor is required to use "U" type dies in Y45 series.
③Cat. No. PUADP-1 Adaptor is required to use "U" type dies in Y46 series.
④The MD6-6R2 ratchet tool is required on these sizes. The standard MD6 or MD6R ratchet tools will not work.

PRESENT INSTALLATION TOOL INDEX (continued)

DIE		DIELESS TOOLS		INSTALLATION TOOLING USING DIES									
GROOVE		MECH.	HYD.	DIE INFORMATION		MECHANICAL		HYDRAULIC					
BURNDY	EEI	MR, MY	Y644	TYPE	COLOR	MD6	OUR840	Y35 ①	Y39	Y750 ①	Y45 ②	Y46 ③	Y60 Ser.
346 ⑦			1 CRIMP	DIE SET	GRAY		X6CART	U6CABT	U6CABT	U6CABT	U6CABT	U6CABT	
348			1 CRIMP	DIE SET	PINK		X2CART	U2CABT	U2CABT	U2CABT	U2CABT	U2CABT	
350				DIE SET				U350	U350	U350	U350	U350	L350
352				DIE SET							S352	P352	L352
373				DIE SET				U373	U373	U373	U373	U373	
374		MY29-3		DIE SET	BLUE		X8CART	U8CABT	U8CABT	U8CABT	U8CABT	U8CABT	
375		MY29-3	1 CRIMP	DIE SET	GREEN		X4CART	U4CABT	U4CABT	U4CABT	U4CABT	U4CABT	
376 314				DIE SET									L314
400				DIE SET	PURPLE			U38RT	U38RT	U38RT	U38RT	U38RT	
403				DIE SET				U403	U403	U403	U403	U403	
419				DIE SET							S419	P419	L419
422				DIE SET									L422
426 317				DIE SET				U317	U317	U317	U317	U317	
459 166				DIE SET				U166/459	U166/459	U166/459	U166/459	U166/459	
467		MY29-3	1 CRIMP	DIE SET	RUBY		X27ART	U27ART	U27ART	U27ART	U27ART	U27ART	
				NEST								P30D	
				INDENTOR								P34PR5	
468				DIE SET				U468	U468	U468	U468	U468	
469				DIE SET							S469	P469	L469
470			1 CRIMP	DIE SET	BLUE			U30ART	U30ART	U30ART	U30ART	U30ART	L30ART
				NEST								P34D	
				INDENTOR								P48PR1	
471		MY29-3	1 CRIMP	DIE SET	GOLD		X1CART	U1CART	U1CART	U1CART	U1CART	U1CART	
				NEST									
				INDENTOR									
472			1 CRIMP	DIE SET	GREEN			U32ART	U32ART	U32ART	U32ART	U32ART	L32ART
				NEST								P35D	
				INDENTOR								P48PR1	
473			1 CRIMP	DIE SET	BLACK			U36ART	U36ART	U36ART	U36ART	U36ART	L36ART
				NEST								P44D	
				INDENTOR								P48PR1	
474			1 CRIMP	DIE SET	GOLD						S40ART	P40ART	L40ART
				NEST									
				INDENTOR									
478			1 CRIMP	DIE SET	BLUE								L46ART
				NEST									
				INDENTOR									
479				DIE SET	RED								L48ART
490 547				DIE SET				U490	U490	U490	U490	U490	L490
495				DIE SET									L495
505 163				DIE SET		W163		U163	U163	U163	U163	U163	L163

①Cat. No. Y35P3 Adaptor is required to use "Y34PR" type indentors with "U" type nest dies in Y35 and Y750 series.
②Cat. No. PT6515 Adaptor is required to use "U" type dies in Y45 series.
③Cat. No. PUADP-1 Adaptor is required to use "U" type dies in Y46 series.
④The MD6-6R2 ratchet tool is required on these sizes. The standard MD6 or MD6R ratchet tools will not work.
⑦ Hexagonal crimp

PRESENT INSTALLATION TOOL INDEX (continued)

DIE		DIELESS TOOLS		INSTALLATION TOOLING USING DIES									
GROOVE		MECH.	HYD.	DIE INFORMATION		MECHANICAL		HYDRAULIC					
BURNDY	EEI	MR, MY	Y644	TYPE	COLOR	MD6	OUR840	Y35 ①	Y39	Y750 ①	Y45 ②	Y46 ③	Y60 Ser.
511		MY29-3		NEST INDENTOR									
512		MY29-3		NEST INDENTOR									
513		MY29-3		NEST INDENTOR									
514		MY29-3		NEST INDENTOR									
515		MY29-3		NEST INDENTOR									
516		MY29-3		NEST INDENTOR									
517		MY29-3		NEST INDENTOR									
518		MY29-3		NEST INDENTOR									
519		MY29-3		NEST INDENTOR									
520		MY29-3		NEST INDENTOR									
538 326				DIE SET				U33RT	U33RT	U33RT	U33RT	U33RT	
547 490				DIE SET				U490	U490	U490	U490	U490	L490
552				DIE SET				U552	U552	U552	U552	U552	
568 167 207 211 256				DIE SET		W167		U167/ U568	U167/ U568	U167/ U568	U167/ U568	U167/ U568	
575				DIE SET									L575
576				DIE SET									L576
578 292				DIE SET							S292	P292	L292
579				DIE SET							S579	P579	L579
587				DIE SET									L47ART
607				DIE SET				U607	U607	U607	U607	U607	
608				DIE SET				U608	U608	U608	U608	U608	608
609				DIE SET				U609	U609	U609	U609	U609	
627				DIE SET									L627
642				DIE SET				U642	U642	U642	U642	U642	L642
643				DIE SET				U643	U643	U643	U643	U643	
647⑤				DIE SET									L45ART
648				DIE SET									L648
654				DIE SET	PURPLE			U654	U654	U654	U654	U654	L654
655	13A			DIE SET				U655	U655	U655	U655	U655	
658				DIE SET				U658	U658	U658	U658	U658	
659				DIE SET		W659		U659	U659	U659	U659	U659	
660				DIE SET		W660	X-660	U660	U660	U660	U660	U660	
667				DIE SET									L667
668				DIE SET				U668	U668	U668	U668	U668	

①Cat. No. Y35P3 Adaptor is required to use "Y34PR" type indentors with "U" type nest dies in Y35 and Y750 series.
②Cat. No. PT6515 Adaptor is required to use "U" type dies in Y45 series.
③Cat. No. PUADP-1 Adaptor is required to use "U" type dies in Y46 series.
⑤Die 302 recommended for 1.84 O.D. barrel.

PRESENT INSTALLATION TOOL INDEX (continued)

DIE		DIELESS TOOLS		INSTALLATION TOOLING USING DIES									
GROOVE		MECH.	HYD.	DIE INFORMATION		MECHANICAL		HYDRAULIC					
BURNDY	EEI	MR, MY	Y644	TYPE	COLOR	MD6	OUR840	Y35 ①	Y39	Y750 ①	Y45 ②	Y46 ③	Y60 Ser.
676				DIE SET				U676	U676	U676	U676	U676	
677				DIE SET				U677	U677	U677	U677	U677	L677
678				DIE SET				U678	U678	U678	U678	U678	
679				DIE SET				U679	U679	U679	U679	U679	
684				DIE SET									L684
687				DIE SET		W687	X-687						
690	1S			DIE SET		W690		U690	U690	U690	U690	U690	
691	2S			DIE SET		W691		U691	U691	U691	U691	U691	
692	4S			DIE SET		W692		U692	U692	U692	U692	U692	
693	6A			DIE SET		W693		U693	U693	U693	U693	U693	
694	10A			DIE SET		W694		U694	U694	U694	U694	U694	
702				DIE SET		W702							
705				DIE SET				U705	U705	U705	U705	U705	
717⑦				DIE SET							S717	P717	L717/ L717W
718⑦				DIE SET									L718
719⑦				DIE SET							S719	P719	L719/ L719W
720⑦				DIE SET							S720	P720	L720/ L720W
721⑦				DIE SET									L721
722⑦				DIE SET							S722	P722	L722/ L722W
723⑦				DIE SET									L723
724⑦				DIE SET							S724	P724	L724/ L724W
725⑦				DIE SET							S725	P725	L725/ L725W
726⑦				DIE SET									L726
727⑦				DIE SET									L727/ L727W
728⑦				DIE SET									L728/ L728W
729⑦				DIE SET									L729/ L729W
735⑦				DIE SET									L735/ L735W
740⑦				DIE SET									L740
786				DIE SET				U786	U786	U786	U786	U786	
788				DIE SET				U788	U788	U788	U788	U788	
789				DIE SET									L789
936⑦			1 CRIMP	DIE SET	YELLOW			U39ART-2	U39ART-2	U39ART-2	U39ART-2	U39ART-2	L39ART-2
997				DIE SET	ORANGE			U997	U997	U997	U997	U997	
998				DIE SET						PU998	S998	P998	
999				DIE SET							S999	P999	
1011				DIE SET						U1011	S1011	P1011	
1012				DIE SET							S1012		

①Cat. No. Y35P3 Adaptor is required to use "Y34PR" type indentors with "U" type nest dies in Y35 and Y750 series.

②Cat. No. PT6515 Adaptor is required to use "U" type dies in Y45 series.

③Cat. No. PUADP-1 Adaptor is required to use "U" type dies in Y46 series.

⑦ Hexagonal crimp

PRESENT INSTALLATION TOOL INDEX (continued)

DIE		DIELESS TOOLS		INSTALLATION TOOLING USING DIES									
GROOVE		MECH.	HYD.	DIE INFORMATION		MECHANICAL		HYDRAULIC					
BURNDY	EEI	MR, MY	Y644	TYPE	COLOR	MD6	OUR840	Y35 ①	Y39	Y750 ①	Y45 ②	Y46 ③	Y60 Ser.
1013		MY29-11		NEST				UV8L	UV8L	UV8L	UV8L	UV8L	
				INDENTOR				Y34PL	Y34PL	Y34PL	Y34PL	Y34PL	
1014		MY29-11		NEST				U6CD1	U6CD1	U6CD1	U6CD1	U6CD1	
				INDENTOR				Y34PR	Y34PR	Y34PR	Y34PR	Y34PR	
1015		MY29-11		NEST				U4CD1	U4CD1	U4CD1	U4CD1	U4CD1	
				INDENTOR				Y34PR	Y34PR	Y34PR	Y34PR	Y34PR	
1016		MY29-11		NEST				U3CD1	U3CD1	U3CD1	U3CD1	U3CD1	
				INDENTOR				Y34PR	Y34PR	Y34PR	Y34PR	Y34PR	
1017		MY29-11		NEST				U2CD1	U2CD1	U2CD1	U2CD1	U2CD1	
				INDENTOR				Y34PR	Y34PR	Y34PR	Y34PR	Y34PR	
1018		MY29-11		NEST				U1CD1	U1CD1	U1CD1	U1CD1	U1CD1	
				INDENTOR				Y34PR	Y34PR	Y34PR	Y34PR	Y34PR	
1019		MY29-11		NEST				U25D1	U25D1	U25D1	U25D1	U25D1	
				INDENTOR				Y34PR2	Y34PR2	Y34PR2	Y34PR2	Y34PR2	
1020		MY29-11		NEST				U26D1	U26D1	U26D1	U26D1	U26D1	
				INDENTOR				Y34PR2	Y34PR2	Y34PR2	Y34PR2	Y34PR2	
1021		MY29-11		NEST				U27D1	U27D1	U27D1	U27D1	U27D1	
				INDENTOR				Y34PR2	Y34PR2	Y34PR2	Y34PR2	Y34PR2	
1022		MY29-11		NEST				U28D1	U28D1	U28D1	U28D1	U28D1	
				INDENTOR				Y34PR2	Y34PR2	Y34PR2	Y34PR2	Y34PR2	
1023		MY29-11		NEST				U29D1	U29D1	U29D1	U29D1	U29D1	
				INDENTOR				Y34PR2	Y34PR2	Y34PR2	Y34PR2	Y34PR2	
1024				NEST				U30D1	U30D1	U30D1	U30D1	U30D1	
				INDENTOR				Y34PR2	Y34PR2	Y34PR2	Y34PR2	Y34PR2	
1025				NEST				U31D1	U31D1	U31D1	U31D1	U31D1	
				INDENTOR				Y34PR2	Y34PR2	Y34PR2	Y34PR2	Y34PR2	
1026				NEST				U32D1	U32D1	U32D1	U32D1	U32D1	
				INDENTOR				Y34PR2	Y34PR2	Y34PR2	Y34PR2	Y34PR2	
1027				NEST				U34D1	U34D1	U34D1	U34D1	U34D1	
				INDENTOR				Y34PR2	Y34PR2	Y34PR2	Y34PR2	Y34PR2	
1028				NEST								P36D	
				INDENTOR								Y48PR1	
1029				NEST								P38D	
				INDENTOR								P48PR1	
1030				NEST								P39D	
				INDENTOR								P48PR1	
1031				NEST								P40D	
				INDENTOR								P48PR1	
1032				NEST								P44D	
				INDENTOR								P48PR1	
1102				DIE SET	WHITE							P1102	
1103				DIE SET	BLUE							P1103	
1104				DIE SET	BROWN					U1104		P1104	
1105				DIE SET						U1105		P1105	
2000				NEST				U27B	U27B	U27B	U27B		
				INDENTOR				Y34PR15	Y34PR15	Y34PR15	Y34PR15		

COLOR CODING FOR OVERHEAD CONNECTORS

Color Code	Wire Dia. per Strand			
	Str.	Compact	Sol.	ACSR
Brown	10		8	
Green	8		6	
Blue	5, 6		4	6
Orange	3, 4	#2	2	4
Red	1-19, 2	1/0	1	2
Yellow	1/0	2/0		1/0, 1
Gray	2/0	3/0		2/0
Black	3/0	4/0		3/0
Pink	4/0	266, 300		4/0
Red	250			
White	266			
Blue	300	350		266.8 (26/7, 18/1)
Brown	336			
Green	350, 397, 400			336.4 (26/7, 18/1)
Gray	450			
Pink	500			477 (18/1)
Green	556			
Purple	600			
Yellow				556.5 (24/7, 26/7)
Blue	650			
Red	700			
Yellow	750			
Orange	800			
White	900			
Brown	1000			

NOTE: This chart is only intended as a guide. For specific applications, refer to the catalog page of the connector.

COLOR CODING FOR AL/CU CONNECTORS

Color Code	Str.	Color Code	Str.
Blue	8	Blue	300
Gray	6	Brown	350
Green	4	Green	400
Pink	2	Pink	500
Gold	1	Black	600
Tan	1/0	Yellow	700/750
Olive	2/0	Red	700/750
Ruby	3/0	Brown	1000
White	4/0	Blue	1500
Red	250	Red	2000

NOTE: This chart is only intended as a guide. For specific applications, refer to the catalog page of the connector.

COLOR CODING FOR COPPER LUGS AND SPLICES

Color Code	Code Size		Flex Cable
	Str.	Sol.	
Red	8	6	8
Blue	6		6
Blue	5		
Gray	4		4
White	3	2	
Brown	2		2
Green	1		1
Pink	1/0		1/0
Black	2/0		2/0
Orange	3/0		3/0
Purple	4/0		4/0
Yellow	250		4/0 and 250
White	300		250
Red	350		313.1
Blue	400		373.7
Brown	500		444.4
Green	600		
Pink	700		535.3
Purple			600
Black	750		646
Yellow			777.7
Orange	800		
White	1000		
Yellow			1111
Green	1500		
Brown	2000		

NOTE: This chart is only intended as a guide. For specific applications, refer to the catalog page of the connector.

BURNDY® REGISTERED AND TRADE NAMES

Registered Name
4-POINT®
BONDIT®
BURNDY®
BURNDYWeld®
ENFORCER®
GRIDMAX®
HYGROUND®
IMPLO®
INFINITY DRIVE®
IN-LINE®
PATRIOT®
SERVIT®
The SmartCart®
There is Only One IMPLO®
Connecting Power to Your World™

Registered/Trade Name	Catalog Section
4-POINT®	N
ALFLUID™	N
BARTAP™	A, E, L
BONDIT®	E
BURNDYWeld®	E
CABELOK™	H
CLIPIT™	H
CRIMPIT™	C, E, H
DURIUM™	D
ENFORCER®	N
FASTAP™	H
FINGRIP™	B
FLEXITAP™	A
GRIDLOK™	E
GRIDMAX®	E
GROUNDLINK™	E
GROUNDMAX™	E
HYCRAB™	K
HYCRIMP™	H
HYDENT™	B, C
HYFLUID™	N
HYGRID™	E
HYGROUND®	E
HYLINK™	B, C, E
HYLUG™	B, C, E, H
HYPLUG™	C, H
HYPRESS™	N
HYREDUCER™	B, C, K
HYSEALPLUG™	H
HYSEALUG™	H
HYSPLICE™	C, H
HYSTACK™	C
HYTAIL™	E
HYTAP™	C, E
HYTEE™	H
HYTOOL™	N
IMPLO®	I
INFINITY DRIVE®	N
IN-LINE®	N
INSULUG™	B
KA-LUG™	A
KOMPRESSOR™	N
L'IL CRIMP™	N
LINEMAN ASSIST™	H
LOKTAP™	H
MOLE™	A, K
MOLIMITER™	K
NOTAPE™	K
OKLIP™	A
OKLIP™	H

Registered/Trade Name	Catalog Section
PATRIOT®	N
PENETROX™	F
POLYTAP™	A
POPPER™	N
POSI-PRESS™	N
POWERLUG™	J
QIKLINK™	A
QIKLITE®	E
QIKLUG™	A, E
QIKTAP™	B
SCRULUG™	A
SERVIT POST™	E
SERVIT®	A, H
SPEC-BLOK™	A
STIRRUP™	H
STIRRUP™	J
STUDBUG™	E
SUPER-CLAMP™	E
TAPIT™	H
The SmartCart®	N
TRITAP™	A
U-BLOK™	A
UNIGROUND™	E
UNIRAP™	G
UNISPLICE™	H
UNITAP™	A
VARILUG™	L
VARITAP™	A
VERSILUG™	A
VERSIPOLE™	A
VERSITAIL™	E
VERSITAP™	A, H
VINYLUG™	B
VISEIT™	H
VISI-SHRINK™	F
WEEB™	E
WEJTAP™	J
WIREMIKE™	N

ALPHA-NUMERIC INDEX BY CATALOG NUMBER

Catalog Number	Page #	Catalog Number	Page #	Catalog Number	Page #	Catalog Number	Page #
15	E-74	1149	I-59	2113	I-55	3075	I-55
25	E-74	1150	I-59	2114	I-55	3076	I-55
32	E-74	1157	I-59	2117	I-55	3077	I-55
45	E-74	1158	I-59	2118	I-55	3079	I-55
65	E-74	1165	I-59	2120	I-55	3080	I-55
90	E-74	1166	I-59	2121	I-55	3083	I-55
115	E-74	1167	I-56	2123	I-55	3084	I-55
150	E-74	1169	I-59	2124	I-55	3085	I-59
200	E-74	1170	I-59	2131	I-55	3086	I-59
250	E-74	1171	I-59	2133	I-55	3090	I-55
500	E-74	1174	I-59	2138	I-55	3093	I-59
1050	I-54	1179	I-59	2139	I-55	3094	I-55
1051	I-54	1181	I-59	2140	I-55	3095	I-55
1052	I-54	1182	I-59	2141	I-55	3103	I-55
1053	I-54	1190	I-56	2142	I-56	3112	I-55
1054	I-54	1903	I-60	2143	I-56	3113	I-55
1056	I-54	1904	I-60	2144	I-56	3114	I-55
1057	I-54	1906	I-60	2146	I-56	3117	I-55
1058	I-54	1923	I-60	2149	I-59	3118	I-55
1059	I-54	1930	I-60	2150	I-59	3120	I-55
1060	I-54	1931	I-60	2157	I-59	3121	I-55
1061	I-54	1978	I-60	2158	I-59	3123	I-55
1062	I-54	1990	I-60	2165	I-59	3124	I-55
1063	I-54	1991	I-60	2166	I-59	3131	I-55
1064	I-54	1993	I-60	2167	I-56	3133	I-55
1065	I-54	1994	I-60	2169	I-59	3138	I-55
1066	I-54	1995	I-60	2170	I-59	3139	I-55
1067	I-54	1997	I-60	2171	I-59	3140	I-55
1070	I-54	1998	I-60	2174	I-59	3141	I-55
1072	I-54	2050	I-54	2179	I-59	3142	I-56
1073	I-55	2051	I-54	2181	I-59	3143	I-56
1074	I-55	2052	I-54	2182	I-59	3144	I-56
1075	I-55	2053	I-54	2190	I-56	3146	I-56
1076	I-55	2054	I-54	2903	I-60	3149	I-59
1077	I-55	2056	I-54	2904	I-60	3150	I-59
1079	I-55	2057	I-54	2906	I-60	3157	I-59
1080	I-55	2058	I-54	2923	I-60	3158	I-59
1083	I-55	2059	I-54	2978	I-60	3165	I-59
1084	I-55	2060	I-54	2990	I-60	3166	I-59
1085	I-59	2061	I-54	2991	I-60	3167	I-56
1086	I-59	2062	I-54	2993	I-60	3169	I-59
1090	I-55	2063	I-54	2994	I-60	3170	I-59
1093	I-59	2064	I-54	2995	I-60	3171	I-59
1094	I-55	2065	I-54	2997	I-60	3174	I-59
1095	I-55	2066	I-54	2998	I-60	3179	I-59
1103	I-55	2067	I-54	3050	I-54	3181	I-59
1112	I-55	2070	I-54	3051	I-54	3182	I-59
1113	I-55	2072	I-54	3053	I-54	3190	I-56
1114	I-55	2073	I-55	3054	I-54	9050	I-54
1117	I-55	2074	I-55	3056	I-54	9051	I-54
1118	I-55	2075	I-55	3057	I-54	9052	I-54
1120	I-55	2076	I-55	3058	I-54	9053	I-54
1121	I-55	2077	I-55	3059	I-54	9054	I-54
1123	I-55	2079	I-55	3060	I-54	9056	I-54
1124	I-55	2080	I-55	3061	I-54	9057	I-54
1131	I-55	2083	I-55	3062	I-54	9058	I-54
1133	I-55	2084	I-55	3063	I-54	9059	I-54
1138	I-55	2085	I-59	3064	I-54	9060	I-54
1139	I-55	2086	I-59	3065	I-54	9061	I-54
1140	I-55	2090	I-55	3066	I-54	9062	I-54
1141	I-55	2093	I-59	3067	I-54	9063	I-54
1142	I-56	2094	I-55	3070	I-54	9064	I-54
1143	I-56	2095	I-55	3072	I-54	9065	I-54
1144	I-56	2103	I-55	3073	I-55	9066	I-54
1146	I-56	2112	I-55	3074	I-55	9067	I-54

ALPHA-NUMERIC INDEX BY CATALOG NUMBER (Continued)

Catalog Number	Page #
9070	I-54
9072	I-54
9073	I-55
9074	I-55
9075	I-55
9076	I-55
9077	I-55
9079	I-55
9080	I-55
9083	I-55
9084	I-55
9085	I-59
9086	I-59
9090	I-55
9093	I-59
9094	I-55
9095	I-55
9103	I-55
9112	I-55
9113	I-55
9114	I-55
9117	I-55
9118	I-55
9120	I-55
9121	I-55
9123	I-55
9124	I-55
9131	I-55
9133	I-55
9138	I-55
9139	I-55
9140	I-55
9141	I-55
9142	I-56
9143	I-56
9144	I-56
9146	I-56
9149	I-59
9150	I-59
9157	I-59
9158	I-59
9165	I-59
9166	I-59
9167	I-56
9169	I-59
9170	I-59
9171	I-59
9174	I-59
9179	I-59
9181	I-59
9182	I-59
9190	I-56
1050/ACSS	I-57
1050/ACSS/TW	I-58
1050/I	I-54
1051/ACSS	I-57
1051/ACSS/TW	I-58
1052/ACSS	I-57
1052/ACSS/TW	I-58
1053/ACSS	I-57
1053/ACSS/TW	I-58
1054/ACSS	I-57
1054/ACSS/TW	I-58
1056/ACSS	I-57
1056/ACSS/TW	I-58
1057/ACSS	I-57
1057/ACSS/TW	I-58
1059/ACSS	I-57
1059/ACSS/TW	I-58
1060/ACSS	I-57
1060/ACSS/TW	I-58
1061/ACSS	I-57
1061/ACSS/TW	I-58
1062/ACSS	I-57
1062/ACSS/TW	I-58
1063/ACSS	I-57
1063/ACSS/TW	I-58
1065/ACSS	I-57
1065/ACSS/TW	I-58
1066/ACSS	I-57
1066/ACSS/TW	I-58
1067/ACSS	I-57
1067/ACSS/TW	I-58
1070/ACSS	I-57
1070/ACSS/TW	I-58
1072/ACSS	I-57
1072/ACSS/TW	I-58
1073/ACSS	I-57
1073/ACSS/TW	I-58
1074/ACSS	I-57
1074/ACSS/TW	I-58
1075/ACSS	I-57
1075/ACSS/TW	I-58
1076/ACSS	I-57
1076/ACSS/TW	I-58
115CI	E-74
115Q	E-71
1165-NZ	I-59
122EMT	N-121
122IMC	N-121
122PVC	N-121
122RIG	N-121
145PTAG	G-11
150Q	E-71
15CI	E-74
15CP	E-74
15Q	E-71
1PBS1/0	A-60
1PBS2	A-60
1PBS250	A-60
1PBS350	A-60
1PBS500	A-60
1PL2/02	A-60
1PL2/03	A-60
1PL2502	A-60
1PL2503	A-60
1PL3502	A-60
1PL42	A-60
1PL43	A-60
1PL44	A-60
1PL6002	A-60
1PLD2/02	A-60
1PLD2/03	A-60
1PLD2/04	A-60
1PLD2/06	A-60
1PLD2502	A-60
1PLD2503	A-60
1PLD2504	A-60
1PLD2506	A-60
1PLD3502	A-60
1PLD3503	A-60
1PLD3504	A-60
1PLD3506	A-60
1PLD3508	A-60
1PLD43	A-60
1PLD44	A-60
1PLD6002	A-60
1PLD6003	A-60
1PLD6004	A-60
1PLD6005	A-60
1PLD6006	A-60
1PLD6008	A-60
1PLO2/02	A-60
1PLO2502	A-60
1PLO3502	A-60
1PLO42	A-60
1PLO6002	A-60
200Q	E-71
2050/ACSS	I-57
2050/ACSS/TW	I-58
2050/I	I-54
2051/ACSS	I-57
2051/ACSS/TW	I-58
2052/ACSS	I-57
2052/ACSS/TW	I-58
2053/ACSS	I-57
2053/ACSS/TW	I-58
2054/ACSS	I-57
2054/ACSS/TW	I-58
2056/ACSS	I-57
2056/ACSS/TW	I-58
2057/ACSS	I-57
2057/ACSS/TW	I-58
2059/ACSS	I-57
2059/ACSS/TW	I-58
2060/ACSS	I-57
2060/ACSS/TW	I-58
2061/ACSS	I-57
2061/ACSS/TW	I-58
2062/ACSS	I-57
2062/ACSS/TW	I-58
2063/ACSS	I-57
2063/ACSS/TW	I-58
2065/ACSS	I-57
2065/ACSS/TW	I-58
2066/ACSS	I-57
2066/ACSS/TW	I-58
2067/ACSS	I-57
2067/ACSS/TW	I-58
2070/ACSS	I-57
2070/ACSS/TW	I-58
2072/ACSS	I-57
2072/ACSS/TW	I-58
2073/ACSS	I-57
2073/ACSS/TW	I-58
2074/ACSS	I-57
2074/ACSS/TW	I-58
2075/ACSS	I-57
2075/ACSS/TW	I-58
2076/ACSS	I-57
2076/ACSS/TW	I-58
2165-NZ	I-59
250Q	E-71
25CHENBOX	D-3
25CI	E-74
25CP	E-74
25FWBOX	D-3
25FWSS	D-6
25HSSN	D-6
25NWBOX	D-3
25Q	E-71
25SWBOX	D-3
25SWSSLT	D-6
25x100HEBBOX	D-2
25x125HEBBOX	D-2
25x150HEBBOX	D-2
25x200HEBBOX	D-2
25x250HEBBOX	D-2
25x300HEBBOX	D-2
25x50HEBBOX	D-2
25x62HEBBOX	D-2
25x75HEBBOX	D-2
3050/ACSS	I-57
3050/ACSS/TW	I-58
3051/ACSS	I-57
3051/ACSS/TW	I-58
3052/ACSS	I-57
3052/ACSS/TW	I-58
3053/ACSS	I-57
3053/ACSS/TW	I-58
3054/ACSS	I-57
3054/ACSS/TW	I-58
3056/ACSS	I-57
3056/ACSS/TW	I-58
3057/ACSS	I-57
3057/ACSS/TW	I-58
3059/ACSS	I-57
3059/ACSS/TW	I-58
3060/ACSS	I-57
3060/ACSS/TW	I-58
3061/ACSS	I-57
3061/ACSS/TW	I-58
3062/ACSS	I-57
3062/ACSS/TW	I-58
3063/ACSS	I-57
3063/ACSS/TW	I-58
3065/ACSS	I-57
3065/ACSS/TW	I-58
3066/ACSS	I-57
3066/ACSS/TW	I-58
3067/ACSS	I-57
3067/ACSS/TW	I-58
3070/ACSS	I-57
3070/ACSS/TW	I-58
3072/ACSS	I-57
3072/ACSS/TW	I-58
3073/ACSS	I-57
3073/ACSS/TW	I-58
3074/ACSS	I-57
3074/ACSS/TW	I-58
3075/ACSS	I-57
3075/ACSS/TW	I-58
3076/ACSS	I-57
3076/ACSS/TW	I-58
3165-NZ	I-59
31CHENBOX	D-3
31CHGSN	D-5
31FWBOX	D-3
31NWBOX	D-3
31SWBOX	D-3

ALPHA-NUMERIC INDEX BY CATALOG NUMBER (Continued)

Catalog Number	Page #
31x100HEBBOX	D-2
31x125HEBBOX	D-2
31x150HEBBOX	D-2
31x175HEBBOX	D-2
31x200HEBBOX	D-2
31x250HEBBOX	D-2
31x300HEBBOX	D-2
31x50HEBBOX	D-2
31x62HEBBOX	D-2
31x75HEBBOX	D-2
32CI	E-74
32CP	E-74
32Q	E-71
38CHENBOX	D-3
38FWBOX	D-3
38FWSS	D-6
38HGSN	D-5
38HGSN009	D-5
38HSSN	D-6
38NWBOX	D-3
38NWGS	D-5
38SWBOX	D-3
38SWSSMD	D-6
38x100HEBBOX	D-2
38x125HEBBOX	D-2
38x125HGSB	D-5
38X125HSSB	D-6
38x150HEBBOX	D-2
38x175HEBBOX	D-2
38x200HEBBOX	D-2
38x225HEBBOX	D-2
38x225HGSB	D-5
38x225HSSB	D-6
38x250HEBBOX	D-2
38x250HSSB	D-6
38x275HEBBOX	D-2
38x275HGSB	D-5
38x275HSSB	D-6
38x300HEBBOX	D-2
38x325HEBBOX	D-2
38x350HEBBOX	D-2
38x400HEBBOX	D-2
38x450HEBBOX	D-2
38x500HEBBOX	D-2
38x50HEBBOX	D-2
38x62HEBBOX	D-2
38x75BWSS	D-7
38x75HEBBOX	D-2
38x81FWGS	D-5
38x88HEBBOX	D-2
3S	A-41
3U	A-41
44CHENBOX	D-3
44FWBOX	D-3
44NWBOX	D-3
44SWBOX	D-3
44x150HEBBOX	D-2
44x200HEBBOX	D-2
45CI	E-74
45CP	E-74
45Q	E-71
4S	A-41
4U	A-41
500Q	E-71
50CHENBOX	D-3
50FWABOX	D-4
50FWBOX	D-3
50FWSS	D-6
50HANBOX	D-4
50HGSN	D-5
50HSSN	D-6
50NWBOX	D-3
50NWGS	D-5
50SWALBOX	D-4
50SWBOX	D-3
50SWSSMD	D-6
50x100HEBBOX	D-2
50x100HGSB	D-5
50x106BWSS	D-7
50x106FWGS	D-5
50x125HEBBOX	D-2
50x150HABBOX	D-4
50x150HEBBOX	D-2
50x150HGSB	D-5
50x175HABBOX	D-4
50x175HEBBOX	D-2
50x200HABBOX	D-4
50x200HEBBOX	D-2
50x200HGSB	D-5
50x200HSSB	D-6
50x225HABBOX	D-4
50x225HEBBOX	D-2
50x250HABBOX	D-4
50x250HEBBOX	D-2
50x250HSSB	D-6
50x275HABBOX	D-4
50x275HEBBOX	D-2
50x300HABBOX	D-4
50x300HEBBOX	D-2
50x300HSSB	D-6
50x325HABBOX	D-4
50x325HEBBOX	D-2
50x350HABBOX	D-4
50x350HEBBOX	D-2
50x375HABBOX	D-4
50x375HEBBOX	D-2
50x400HABBOX	D-4
50x400HEBBOX	D-2
50x425HABBOX	D-4
50x450HABBOX	D-4
50x450HEBBOX	D-2
50x500HABBOX	D-4
50x500HEBBOX	D-2
50x550HABBOX	D-4
50x550HEBBOX	D-2
50x600HEBBOX	D-2
50x75HEBBOX	D-2
5600-1020	I-47
5600-1020D	I-47
5600-1022	I-47
5600-1022D	I-47
5600-1026	I-47
5600-1026D	I-47
5600-1028	I-47
5600-1028D	I-47
5600-1030	I-47
5600-1030D	I-47
5600-1032	I-47
5600-1032D	I-47
5600-1040	I-47
5600-1040D	I-47
5600-1042	I-47
5600-1042D	I-47
5600-1044	I-47
5600-1044D	I-47
5600-1050	I-47
5600-1050D	I-47
5600-1052	I-47
5600-1052D	I-47
5600-1054	I-47
5600-1054D	I-47
5600-1056	I-47
5600-1056D	I-47
5600-1058	I-48
5600-1058D	I-48
5600-1060	I-47
5600-1060D	I-47
5600-1062	I-47
5600-1062D	I-47
5600-1064	I-48
5600-1064D	I-48
5600-1066	I-48
5600-1066D	I-48
5600-1070	I-48
5600-1070D	I-48
5600-1072	I-48
5600-1074	I-48
5600-1074D	I-48
5600-1076	I-48
5600-1076D	I-48
5600-1078	I-48
5600-1078D	I-48
5600-1079	I-48
5600-1079D	I-48
5600-1080	I-48
5600-1080D	I-48
5600-1082	I-48
5600-1082D	I-48
5600-2020	I-49
5600-2022	I-49
5600-2026	I-49
5600-2028	I-49
5600-2030	I-49
5600-2032	I-49
5600-2040	I-49
5600-2042	I-49
5600-2044	I-49
5600-2050	I-49
5600-2052	I-49
5600-2054	I-49
5600-2056	I-49
5600-2058	I-49
5600-2060	I-49
5600-2062	I-49
5600-2064	I-49
5600-2066	I-49
5600-2070	I-49
5600-2072	I-49
5600-2074	I-49
5600-2076	I-49
5600-2078	I-49
5600-2079	I-49
5600-2080	I-49
5600-2082	I-49
62CHENBOX	D-3
62FWABOX	D-4
62FWBOX	D-3
62FWSS	D-6
62HANBOX	D-4
62HGSN	D-5
62HSSN	D-6
62NWBOX	D-3
62NWGS	D-5
62SWALBOX	D-4
62SWBOX	D-3
62SWSSMD	D-6
62x100HEBBOX	D-2
62X100HGSB	D-5
62x125HEBBOX	D-2
62x150HEBBOX	D-2
62x175HABBOX	D-4
62x175HEBBOX	D-2
62x175HGSB	D-5
62x200HABBOX	D-4
62x200HEBBOX	D-2
62x225HABBOX	D-4
62x225HEBBOX	D-2
62x250HABBOX	D-4
62x250HEBBOX	D-2
62x275HEBBOX	D-2
62x300HABBOX	D-4
62x300HEBBOX	D-2
62x300HSSB	D-6
62x325HEBBOX	D-2
62x350HABBOX	D-4
62x350HEBBOX	D-2
62x400HABBOX	D-4
62x400HEBBOX	D-2
62x450HABBOX	D-4
62x450HEBBOX	D-2
62x500HABBOX	D-4
62x500HEBBOX	D-2
62x550HABBOX	D-4
62x600HABBOX	D-4
62x600HEBBOX	D-2
65CI	E-74
65CP	E-74
65Q	E-71
75NWGS	D-5
75X125HGSB	D-5
9050/ACSS	I-57
9050/ACSS/TW	I-58
9051/ACSS	I-57
9051/ACSS/TW	I-58
9052/ACSS	I-57
9052/ACSS/TW	I-58
9053/ACSS	I-57
9053/ACSS/TW	I-58
9054/ACSS	I-57
9054/ACSS/TW	I-58
9056/ACSS	I-57
9056/ACSS/TW	I-58
9057/ACSS	I-57
9057/ACSS/TW	I-58
9059/ACSS	I-57
9059/ACSS/TW	I-58
9060/ACSS	I-57
9060/ACSS/TW	I-58
9061/ACSS	I-57
9061/ACSS/TW	I-58

ALPHA-NUMERIC INDEX BY CATALOG NUMBER (Continued)

Catalog Number	Page #
9062/ACSS	I-57
9062/ACSS/TW	I-58
9063/ACSS	I-57
9063/ACSS/TW	I-58
9065/ACSS	I-57
9065/ACSS/TW	I-58
9066/ACSS	I-57
9066/ACSS/TW	I-58
9067/ACSS	I-57
9067/ACSS/TW	I-58
9070/ACSS	I-57
9070/ACSS/TW	I-58
9072/ACSS	I-57
9072/ACSS/TW	I-58
9073/ACSS	I-57
9073/ACSS/TW	I-58
9074/ACSS	I-57
9074/ACSS/TW	I-58
9075/ACSS	I-57
9075/ACSS/TW	I-58
9076/ACSS	I-57
9076/ACSS/TW	I-58
90CI	E-74
90Q	E-71
9165-NZ	I-59
AGSKIT2	A-33
AGSKIT250	A-33
ALFLUIDGAL	N-97
ALFLUIDQT	N-97
AMS-0	A-32
AMS-1000	A-32
AMS-2	A-32
AMS-250	A-32
AMS-350	A-32
AMS-4/0	A-32
AMS-500	A-32
AMS-750	A-32
ASA1000U	C-142
ASA250U	C-142
ASA800U	C-142
AYP1	C-149
AYP1/0	C-149
AYP2	C-149
AYP250	C-149
AYP350	C-149
AYP4	C-149
AYP500	C-149
AYP6	C-149
AYP750	C-149
AYPO2/0	C-149
AYPO250	C-149
AYPO3/0	C-149
AYPO300	C-149
AYPO350	C-149
AYPO4/0	C-149
AYPO400	C-149
AYPO500	C-149
AYPO600	C-149
AYPO750	C-149
B-106	E-101
B106-32	E-102
B106-37	E-102
B106-41	E-102
B-107	E-101
B107-32	E-102
B-1208	E-80
B-1212	E-85
B-1215	E-90
B-1216	E-90
B-1218	E-90
B-1219	E-90
B-1220	E-90
B-1221	E-90
B-1222	E-90
B-1223	E-90
B-1224	E-90
B-1225-H	E-90
B-1226-H	E-90
B-1228-H	E-90
B-1270	E-79
B-1271	E-79
B-1272	E-79
B-1273	E-79
B-1274	E-79
B-1275	E-79
B-1276	E-79
B-1277	E-79
B-1278	E-79
B-1279	E-79
B-1280	E-79
B-1281	E-79
B-1282	E-79
B-1283	E-79
B-1284	E-79
B-1285	E-79
B-1286	E-79
B-1287	E-79
B-1288	E-79
B-1289	E-79
B-1290	E-79
B-1291	E-79
B-1292	E-79
B-1293	E-79
B-1294	E-79
B-1295	E-79
B-1296	E-79
B-1297	E-79
B-1298	E-79
B-1299	E-79
B12E	N-120
B-1300	E-79
B-1301	E-79
B-1302	E-79
B-1303	E-79
B-1304	E-79
B-1305	E-79
B-1306	E-79
B-1307	E-79
B-1308	E-79
B-1309	E-79
B-1310	E-79
B-1311	E-80
B-1313	E-80
B-1314	E-80
B-1315	E-80
B-1316	E-80
B-1317	E-80
B-1318	E-80
B-1319	E-80
B-1320	E-80
B-1321	E-80
B-1322	E-80
B-1323	E-80
B-1324	E-80
B-1325	E-80
B-1326	E-80
B-1327	E-80
B-1328	E-80
B-1329	E-80
B-1330	E-80
B-1331	E-80
B-1332	E-80
B-1333	E-80
B-1334	E-80
B-1335	E-80
B-1336	E-80
B-1581	E-83
B-1582	E-83
B-1583	E-83
B-1584	E-83
B-1586	E-83
B-1587	E-83
B-1588	E-83
B-1589	E-83
B-1593	E-83
B-1594	E-83
B-1595	E-83
B-1596	E-83
B-1597	E-83
B-1601	E-83
B-1602	E-83
B-1603	E-83
B-1604	E-83
B-1605	E-83
B-1606	E-83
B-1610	E-83
B-1611	E-83
B-1613	E-92
B-1614	E-92
B-1615	E-92
B-1616	E-92
B-1617	E-92
B-1618	E-92
B-1619	E-92
B-1620	E-92
B-1626	E-91
B-1627	E-91
B-1628	E-91
B-1629	E-91
B-1630	E-91
B-1631	E-91
B-1632	E-91
B-1633	E-91
B-1634	E-91
B-1635	E-91
B-1636	E-91
B-1637	E-91
B-1638	E-91
B-1639	E-91
B-1640	E-91
B-1641	E-91
B-1642	E-91
B1643	E-91
B-1644	E-91
B-1645	E-91
B-1646	E-91
B-1648	E-91
B-1649	E-91
B-1650	E-91
B1E34R	N-120
B-205	E-75
B-206	E-75
B-207	E-75
B-208	E-75
B-2084	E-85
B-209	E-75
B-210	E-75
B-211	E-75
B-213	E-75
B-214	E-75
B-215	E-75
B2154	E-83
B-2155	E-83
B-2156	E-83
B-2157	E-83
B-2158	E-83
B-2159	E-83
B-2160	E-83
B-2161	E-83
B-2162	E-83
B-2163	E-83
B-2164	E-83
B-2165	E-83
B-2189	E-90
B-2199	E-87
B-2200	E-87
B-221	E-76
B-223	E-76
B-2235	E-85
B-224	E-76
B-225	E-76
B-226	E-76
B-227	E-76
B-228	E-76
B-229	E-76
B-230	E-76
B-231	E-76
B-232	E-76
B-2320	E-85
B-234	E-76
B-235	E-76
B-236	E-76
B-237	E-76
B-238	E-76
B-239	E-76
B-240	E-76
B-241	E-76
B-242	E-76
B-243	E-76
B-244	E-76
B-245	E-76
B-2450	E-85
B-246	E-76
B-247	E-76
B-2476	E-89
B-2477	E-89
B-2478	E-89
B-248	E-76
B-2480	E-89
B-2480-S	E-89

ALPHA-NUMERIC INDEX BY CATALOG NUMBER (Continued)

Catalog Number	Page #
B-2482	E-89
B-2483	E-89
B-2484	E-89
B-2486	E-89
B-2487	E-89
B-2488	E-89
B-249	E-76
B-2490	E-89
B-2491	E-89
B-2493	E-89
B-2494	E-89
B-2495	E-89
B-2497	E-89
B-2498	E-89
B-250	E-76
B-2506	E-87
B-2507	E-87
B-2509	E-87
B-251	E-76
B-2510	E-85
B-2511	E-87
B-252	E-76
B-253	E-76
B-254	E-76
B-2540	E-90
B-2542	E-87
B-255	E-76
B-2558	E-85
B-256	E-76
B-2566	E-84
B-2567	E-92
B-2568	E-92
B-257	E-76
B-258	E-76
B-2583	E-89
B-2583-S	E-89
B-259	E-76
B-260	E-76
B-261	E-76
B-262	E-76
B-263	E-76
B-264	E-76
B-265	E-76
B-266	E-76
B-267	E-76
B-268	E-76
B-2687	E-78
B-2689	E-78
B-269	E-76
B-2690	E-78
B-2691	E-78
B-2692	E-78
B-2693	E-78
B-2694	E-78
B-2695	E-78
B-2696	E-78
B-2697	E-78
B-2698	E-78
B-2699	E-78
B-270	E-76
B-2700	E-78
B-2701	E-78
B-2702	E-78
B-2703	E-78
B-2704	E-78
B-2705	E-78
B-2706	E-78
B-2707	E-78
B-2708	E-78
B-2709	E-78
B-2710	E-78
B-2711	E-78
B-2712	E-78
B-2713	E-78
B-2714	E-78
B-2715	E-78
B-2716	E-78
B-2717	E-78
B-2718	E-78
B-2719	E-78
B-2747	E-78
B-2751	E-78
B-2752	E-78
B-2753	E-78
B-2754	E-78
B-2755	E-78
B-2756	E-78
B-2757	E-78
B-2761	E-92
B-2781	E-90
B-280	E-76
B-282	E-76
B-283	E-76
B-284	E-76
B-285	E-76
B-286	E-76
B-287	E-76
B-288	E-76
B-289	E-76
B-290	E-76
B-291	E-76
B-293	E-76
B-294	E-76
B-295	E-76
B-296	E-76
B-297	E-76
B-298	E-76
B2D12	E-56
B2D12N	E-56
B2E12	E-56
B2E12N	E-56
B2F12	E-56
B2F12N	E-56
B2G12N	E-56
B-333	E-76
B34E12R	N-120
B370320-01	E-74
B370320-02	E-74
B370320-03	E-74
B38-0101-00	E-104
B38-0135-01	E-103
B38-0302-00	E-104
B38-0302-02	E-104
B38-0303-00	E-104
B38-0304-00	E-104
B38-0305-00	E-104
B38-0306-00	E-103, E-104
B38-0307-00	E-104
B38-0308-00	E-104
B38-0309-00	E-104
B38-0315-00	E-103
B38-0330-00	E-103
B38-3662-01	E-105
B38-3662-02	E-105
B38-3662-03	E-105
B38-3662-04	E-105
B38-3662-05	E-105
B38-3662-06	E-105
B38-3922-00	E-103, E-104
B38412900	E-103
B38412905	E-103
B3D12	E-56
B3D12N	E-56
B3E12	E-56
B3E12N	E-56
B3F12	E-56
B3F12N	E-56
B3G12	E-56
B3G12N	E-56
B40-0106-75	E-101
B40-0106-76	E-102
B40-0106-77	E-102
B40-0106-78	E-102
B40-0319-01	E-103
B40-0319-03	E-103
B40-3657-00	E-101
B40-4431-00	E-102
B-423	E-77
B-424	E-77
B-425	E-77
B-426	E-77
B-427	E-77
B-428	E-77
B-429	E-77
B-430	E-77
B-431	E-77
B-432	E-77
B-433	E-77
B-434	E-77
B-435	E-77
B-436	E-77
B-437	E-77
B-438	E-77
B-439	E-77
B-440	E-77
B-441	E-77
B-442	E-77
B-443	E-77
B-444	E-77
B-445	E-77
B-446	E-77
B-447	E-77
B-448	E-77
B-449	E-77
B-450	E-77
B-451	E-77
B-452	E-77
B-453	E-77
B-454	E-77
B-455	E-77
B-456	E-77
B-457	E-77
B-458	E-77
B-459	E-77
B-460	E-77
B-461	E-77
B-462	E-77
B-463	E-77
B-464	E-77
B-465	E-77
B-466	E-77
B-467	E-77
B-468	E-77
B-469	E-77
B-470	E-77
B-471	E-77
B-472	E-77
B-483	E-77
B-485	E-77
B-486	E-77
B-487	E-77
B-488	E-77
B-489	E-77
B-490	E-77
B-491	E-77
B-492	E-77
B-493	E-77
B-495	E-81
B-496	E-81
B-497	E-81
B-498	E-81
B-499	E-81
B4D12	E-56
B4D12N	E-56
B4E12	E-56
B4E12N	E-56
B4F12	E-56
B4F12N	E-56
B4G12N	E-56
B-500	E-81
B-501	E-81
B-502	E-81
B-5021	E-76
B-503	E-81
B-504	E-81
B-505	E-81
B-506	E-81
B-5065	E-88
B-507	E-81
B-508	E-81
B-509	E-81
B-510	E-81
B-511	E-81
B-513	E-81
B-5294	E-84
B-5321	E-83
B-5330	E-85
B-5331	E-88
B-5332	E-85
B-5333	E-85
B-5334	E-85
B-5335	E-85
B-5336	E-85
B-5337	E-85
B-5338	E-85
B-5340	E-80
B-5341	E-85
B-5342	E-80
B-5351	E-85
B-5352	E-85

ALPHA-NUMERIC INDEX BY CATALOG NUMBER (Continued)

Catalog Number	Page #
B-5353	E-85
B-5359	E-90
B-5361	E-90
B-5362	E-90
B-5363	E-90
B-537	E-82
B-538	E-82
B-5380	E-84
B-5389	E-90
B-539	E-82
B-5390	E-84
B-540	E-82
B-541	E-82
B-5416	E-84
B-5419	E-92
B-542	E-82
B-5428	E-85
B-543	E-82
B-5432	E-78
B-544	E-82
B-545	E-82
B-546	E-82
B-547	E-82
B-5475	E-76
B-548	E-82
B-549	E-82
B-550	E-82
B-551	E-82
B-5513	E-84
B-5515	E-84
B-5517	E-85
B-552	E-82
B-553	E-82
B-555	E-82
B-5555	E-84
B-5556	E-84
B-556	E-82
B-5560	E-85
B-5561	E-84
B-557	E-82
B-5573	E-85
B-5574	E-76
B-558	E-82
B-559	E-82
B-560	E-82
B-5604	E-85
B-561	E-82
B-5618	E-79
B-562	E-82
B-5623	E-75
B-5624	E-75
B-5625	E-75
B-5626	E-75
B-5627	E-80
B-5629	E-80
B-563	E-82
B-5630	E-80
B-5631	E-80
B-5632	E-80
B-5634	E-80
B-5635	E-80
B-5636	E-80
B-5637	E-80
B-5638	E-80
B-5639	E-80
B-564	E-82
B-5640	E-85
B-5642	E-80
B-5644	E-80
B-5645	E-80
B-5652	E-80
B-5659	E-80
B-566	E-82
B-5660	E-83
B-5667	E-85
B-5668	E-80
B-567	E-82
B-5676	E-80
B-5677	E-85
B-5679	E-80
B-5680	E-80
B-5682	E-80
B-5684	E-80
B-5686	E-80
B-5688	E-80
B-569	E-82
B-5698	E-84
B-5699	E-84
B-570	E-82
B-5702	E-85
B-5709	E-79
B-571	E-82
B-572	E-82
B-5722	E-84
B-573	E-82
B-5732	E-84
B-5734	E-84
B-5738	E-84
B-574	E-82
B-5746	E-84
B-575	E-82
B-5767	E-85
B-577	E-82
B-5777	E-84
B-578	E-82
B-579	E-82
B-5803	E-84
B-5807	E-84
B-5820	E-84
B-5821	E-84
B-5830	E-84
B-5833	E-84
B-585	E-89
B-5850	E-84
B-5857	E-84
B-586	E-89
B-587	E-89
B-5877	E-84
B-588	E-89
B-588-S	E-89
B-589	E-89
B-590	E-89
B-5904	E-84
B-591	E-89
B-5910	E-92
B-592	E-89
B-593	E-89
B-5935	E-84
B-594	E-89
B-5940	E-84
B-5943	E-80
B-595	E-89
B-596	E-89
B-5961	E-84
B-5963	E-84
B-5972	E-84
B-598	E-89
B-599	E-89
B-5992	E-84
B-600	E-89
B-6002	E-85
B-6003	E-84
B-602	E-88
B-6025	E-84
B-603	E-88
B-604	E-88
B-6046	E-80
B-6048	E-84
B-605	E-88
B-6051	E-85
B-6060	E-92
B-6061	E-92
B-6067	E-92
B-6072	E-92
B-6114	E-87
B-616	E-88
B-6165	E-84
B-617	E-88
B-618	E-88
B-619	E-88
B-620	E-88
B-6208	E-85
B-621	E-88
B-622	E-88
B-624	E-88
B-625-H	E-88
B-626-H	E-88
B-628	E-87
B-629	E-87
B-630	E-87
B-631	E-87
B-644	E-87
B-645	E-87
B-646	E-87
B-647	E-87
B-648	E-87
B-649	E-87
B-650	E-87
B-652	E-87
B-653	E-87
B-654	E-87
B-6552	E-80
B-6630	E-83
B-6766	E-85
B-6906	E-83
B-7075	E-87
B-7146	E-87
B-7192	E-88
B-7500	E-93
B-7501	E-93
B-7502	E-93
B-7503	E-93
B-7504	E-93
B-7505	E-93
B-7506	E-93
B-7507	E-93
B-7508	E-93
B-7509	E-93
B-7510	E-93
B-7511	E-93
B-7512	E-93
B-7513	E-93
B-7514	E-93
B-7515	E-93
B-7520	E-93
B-7521	E-93
B-7522	E-93
B-7523	E-93
B-7528	E-93
B-7529	E-93
B-7530	E-93
B-7531	E-93
B-7588	E-94
B-7589	E-94
B-7590	E-94
B-7591	E-94
B-7592	E-94
B-7593	E-94
B-7594	E-94
B-7595	E-94
B-7596	E-94
B-7597	E-94
B-7598	E-94
B-7599	E-94
B-7600	E-94
B-7601	E-94
B-7602	E-94
B-7603	E-94
B-7604	E-94
B-7605	E-94
B-7606	E-94
B-7607	E-94
B-7608	E-94
B-7609	E-94
B-7610	E-94
B-7611	E-94
B-7612	E-94
B-7613	E-94
B-7614	E-94
B-7615	E-94
B-7616	E-94
B-7617	E-94
B-7618	E-94
B-7619	E-94
B-7620	E-95
B-7621	E-95
B-7622	E-95
B-7623	E-95
B-7624	E-95
B-7625	E-95
B-7626	E-95
B-7627	E-95
B-7628	E-95
B-7629	E-95
B-7630	E-95
B-7631	E-95
B-7632	E-95
B-7633	E-95
B-7634	E-95
B-7635	E-95

ALPHA-NUMERIC INDEX BY CATALOG NUMBER (Continued)

Catalog Number	Page #
B-7636	E-95
B-7637	E-95
B-7638	E-95
B-7639	E-95
B-7640	E-95
B-7641	E-95
B-7642	E-95
B-7643	E-95
B-7644	E-95
B-7645	E-95
B-7646	E-95
B-7647	E-95
B-7648	E-95
B-7649	E-95
B-7650	E-95
B-7651	E-95
B-7652	E-95
B-7653	E-95
B-7654	E-95
B-7655	E-95
B-7656	E-95
B-7657	E-95
B-7658	E-95
B-7659	E-95
B-7708	E-96
B-7709	E-96
B-7710	E-96
B-7711	E-96
B-7712	E-96
B-7713	E-96
B-7714	E-96
B-7715	E-96
B-7716	E-96
B-7717	E-96
B-7718	E-96
B-7719	E-96
B-7720	E-96
B-7721	E-96
B-7722	E-96
B-7723	E-96
B-7724	E-96
B-7725	E-96
B-7726	E-96
B-7727	E-96
B-7728	E-96
B-7729	E-96
B-7730	E-96
B-7731	E-96
B-7732	E-96
B-7733	E-96
B-7734	E-96
B-7735	E-96
B-7736	E-96
B-7737	E-96
B-7738	E-96
B-7739	E-96
B-7884	E-97
B-7885	E-97
B-7886	E-97
B-7887	E-97
B-7888	E-97
B-7889	E-97
B-7890	E-97
B-7891	E-97
B-7892	E-97
B-7893	E-97
B-7894	E-97
B-7895	E-97
B-7896	E-97
B-7897	E-97
B-7898	E-97
B-7899	E-97
B-7900	E-97
B-7901	E-97
B-7902	E-97
B-7903	E-97
B-7904	E-97
B-7905	E-97
B-7906	E-97
B-7907	E-97
B-7908	E-97
B-7909	E-97
B-7910	E-97
B-7911	E-97
B-7912	E-97
B-7913	E-97
B-7914	E-97
B-7915	E-97
B-7916	E-97
B-7917	E-97
B-7918	E-97
B-7919	E-97
B-7920	E-97
B-7921	E-97
B-7922	E-97
B-7923	E-97
B-8011	E-85
B-8027	E-85
B-8165	E-90
B-8214	E-85
B-8294	E-85
B-8359	E-92
B-8379	E-88
B-8381	E-88
B-8402	E-81
B-8403	E-81
B-8410	E-88
B-8413	E-88
B-8414	E-81
B-8415	E-81
B-8423	E-88
B-8428	E-85
B-8434	E-82
B-8435	E-82
B-8441	E-82
B-8442	E-82
B-8451	E-85
B-8452	E-82
B-8454	E-82
B-8461	E-85
B-8512	E-90
B-8718	E-90
B-8726	E-85
B-8802	E-85
B-8833	E-89
B-8882	E-80
B-9021	E-89
B-9029	E-90
B-9233	E-89
B-9233-S	E-89
B-9253	E-92
BA10E10M	B-8
BA10E14M	B-8
BA10E38M	B-8
BA10E516	B-8
BA10E6M	B-8
BA10E8M	B-8
BA10EF10	B-28
BA10EF10M	B-28
BA10EF6	B-28
BA10EF6M	B-28
BA10EF8	B-28
BA10EF8M	B-28
BA10EL10	B-33
BA10EL10M	B-33
BA10EL6	B-33
BA10EL6M	B-33
BA10EL8	B-33
BA10EL8M	B-33
BA10EZ10	B-42
BA10EZ6	B-42
BA10EZ8	B-42
BA14E10M	B-8
BA14E14M	B-8
BA14E38	B-8
BA14E4M	B-8
BA14E516M	B-8
BA14E6L	B-33
BA14E6LM	B-33
BA14E6M	B-8
BA14E8M	B-8
BA14EF10	B-28
BA14EF10M	B-28
BA14EF2	B-28
BA14EF6	B-28
BA14EF8	B-28
BA14EF8M	B-28
BA14EL10	B-33
BA14EL10M	B-33
BA14EL8	B-33
BA14EL8M	B-33
BA14EZ10	B-42
BA14EZ2	B-42
BA14EZ6	B-42
BA14EZ8	B-42
BA16E10M	B-8
BA16E14M	B-8
BA16E38M	B-8
BA16E4M	B-8
BA16E6M	B-8
BA16E8M	B-8
BA16EF10	B-28
BA16EF10M	B-28
BA16EF2	B-28
BA16EF2M	B-28
BA16EF6	B-28
BA16EF6M	B-28
BA16EF8	B-28
BA16EF8M	B-28
BA16EL10	B-33
BA16EL10M	B-33
BA16EL6	B-33
BA16EL6M	B-33
BA16EL8	B-33
BA16EL8M	B-33
BA16EZ10	B-42
BA16EZ2	B-42
BA16EZ6	B-42
BA16EZ8	B-42
BA-200	E-105
BA-201	E-105
BA-202	E-105
BA-203	E-105
BA-204	E-105
BA-205	E-105
BA-207	E-105
BA-208	E-105
BA-209	E-105
BA-211	E-105
BA-212	E-105
BA-213	E-105
BA-214	E-105
BA-215	E-105
BA-240	E-105
BAT14V	N-24, N-79
BAT18V	N-10, N-20, N-73
BAT18VLI	N-9, N-21, N-72
BB024L	E-52
BB024L6T14	E-54
BB024L9T14	E-54
BB048L	E-52
BB048L6T14	E-54
BB048L9T14	E-54
BB067L	E-52
BB067L6T14	E-54
BB067L9T14	E-54
BB077L	E-52
BB154L	E-52
BB226L	E-52
BB300L	E-52
BBB-14210A	E-68
BBB-14224B	E-68
BBB-14410C	E-68
BBB-14410D	E-68
BBB-14412E	E-68
BBB-14412F	E-68
BBB-14416G	E-68
BBB-14416H	E-68
BBB-14420J	E-68
BBB412UD	E-68
BBB-424-UD	E-68
BBB-HR19	E-68
BBB-VR36	E-68
BC25	H-69
BC28	H-69
BC2C	H-69
BCC1000CUAL	N-80
BCCBAT12V	N-80
BCCCASE	N-80
BCCCHGR	N-80
BCH1211	N-117, N-119
BCM5	N-117, N-119
BCT/PATCHGR-LIDC	N-76
BCT/PATDCCHGR	N-10, N-20, N-71
BD12	E-55
BD12N	E-55
BD18	E-55
BD18N	E-55
BD24	E-55
BD24N	E-55

ALPHA-NUMERIC INDEX BY CATALOG NUMBER (Continued)

Catalog Number	Page #
BD6T14	E-54
BD9T14	E-54
BDA-11-2/0-1	A-53
BDA-112-350	A-51
BDA-11-500	A-51
BDA-14-2/0-1	A-53
BDA-16-350	A-51
BDA-16-500	A-51
BDA-212-500	A-51
BDA-22-350	A-51
BDA-22-500	A-51
BDA-24-500	A-51
BDA-26-350	A-51
BDA-26-500	A-51
BDALHC112350	A-49
BDALHC11500	A-49
BDALHC16350	A-49
BDALHC16500	A-49
BDALHC212500	A-49
BDALHC22350	A-49
BDALHC22500	A-49
BDALHC22600	A-50
BDALHC24500	A-50
BDALHC26350	A-49
BDALHC26500	A-50
BDALHCEB	A-50
BDAMHC112/0	A-48
BDAMHC11350	A-48
BDAMHC14500	A-48
BDAMHC162/0	A-48
BDAMHC162500	A-48
BDAMHC222/0	A-48
BDAMHC262/0	A-48
BDAMHCEB	A-48
BDASHC112/01	A-47
BDASHC142/01	A-47
BDASHCEB	A-47
BDB-11-2/0-1	A-53
BDB-11-2/0-2	A-53
BDB-11-2/0-3	A-53
BDB-112-350-1	A-52
BDB-112-350-2	A-52
BDB-112-350-3	A-52
BDB-11-350-1	A-53
BDB-11-350-2	A-53
BDB-11-350-3	A-53
BDB-11-500-1	A-53
BDB-11-500-2	A-53
BDB-11-500-3	A-53
BDB-14-500-1	A-52
BDB-14-500-2	A-52
BDB-14-500-3	A-52
BDB-16-2/0-1	A-52
BDB-16-2/0-2	A-52
BDB-16-2/0-3	A-52
BDB-162-500-1	A-52
BDB-162-500-2	A-52
BDB-162-500-3	A-52
BDB-16-350-1	A-52
BDB-16-350-2	A-52
BDB-16-350-3	A-52
BDB-16-500-1	A-52
BDB-16-500-2	A-52
BDB-16-500-3	A-52
BDB-212-500-1	A-52
BDB-212-500-2	A-52
BDB-212-500-3	A-52
BDB-22-2/0-1	A-53
BDB-22-2/0-2	A-53
BDB-22-2/0-3	A-53
BDB-22-350-1	A-53
BDB-22-350-2	A-53
BDB-22-350-3	A-53
BDB-22-500-1	A-53
BDB-22-500-2	A-53
BDB-22-500-3	A-53
BDB-24-500-1	A-52
BDB-24-500-2	A-52
BDB-24-500-3	A-52
BDB-26-2/0-1	A-52
BDB-26-2/0-2	A-52
BDB-26-2/0-3	A-52
BDB-26-350-1	A-52
BDB-26-350-2	A-52
BDB-26-350-3	A-52
BDB-26-500-1	A-52
BDB-26-500-2	A-52
BDB-26-500-3	A-52
BDBLHC1123501	A-49
BDBLHC1123502	A-49
BDBLHC1123503	A-49
BDBLHC115001	A-49
BDBLHC115002	A-49
BDBLHC115003	A-49
BDBLHC163501	A-49
BDBLHC163502	A-49
BDBLHC163503	A-49
BDBLHC165001	A-49
BDBLHC165002	A-49
BDBLHC165003	A-49
BDBLHC2125001	A-49
BDBLHC2125002	A-49
BDBLHC2125003	A-49
BDBLHC223501	A-49
BDBLHC223502	A-49
BDBLHC223503	A-49
BDBLHC225001	A-49
BDBLHC225002	A-49
BDBLHC225003	A-49
BDBLHC226001	A-50
BDBLHC226002	A-50
BDBLHC226003	A-50
BDBLHC245001	A-50
BDBLHC245002	A-50
BDBLHC245003	A-50
BDBLHC263501	A-49
BDBLHC263502	A-49
BDBLHC263503	A-49
BDBLHC265001	A-50
BDBLHC265002	A-50
BDBLHC265003	A-50
BDBLHCCOVER	A-50
BDBMHC112/01	A-48
BDBMHC112/02	A-48
BDBMHC112/03	A-48
BDBMHC113501	A-48
BDBMHC113502	A-48
BDBMHC113503	A-48
BDBMHC145001	A-48
BDBMHC145002	A-48
BDBMHC145003	A-48
BDBMHC162/01	A-48
BDBMHC162/02	A-48
BDBMHC162/03	A-48
BDBMHC1625001	A-48
BDBMHC1625002	A-48
BDBMHC1625003	A-48
BDBMHC222/01	A-48
BDBMHC222/02	A-48
BDBMHC222/03	A-48
BDBMHC262/01	A-48
BDBMHC262/02	A-48
BDBMHC262/03	A-48
BDBMHCCOVER	A-48
BDBSHCCOVER	A-47
BDC-11-2/0-1	A-53
BDC-14-2/0-1	A-53
BDCSHC112/01	A-47
BDCSHC142/01	A-47
BDESS750-3	K-65
BDESS750-4	K-65
BDESS750-5	K-65
BDESS750-6	K-65
BDESS750-7	K-65
BDESS750-8	K-65
BDSC1	F-5
BDSC5	F-5
BDT1	E-41
BDTIBB	E-42
BE12	E-55
BE12N	E-55
BE18	E-55
BE18N	E-55
BE24	E-55
BE24N	E-55
BEB122	N-121
BEB122EMT	N-121
BEB122PVC	N-121
BEB122RIG	N-121
BEBSHOECASE	N-121
BECBSD	N-68
BECNVSD	N-68
BF12	E-55
BF12N	E-55
BF18	E-55
BF18N	E-55
BF24	E-55
BF24N	E-55
BG12	E-55
BG12N	E-55
BG18	E-55
BG18N	E-55
BG24	E-55
BG24N	E-55
BGBL-1/0	A-13
BGBL-250	A-13
BGBL-4	A-13
BGBL4SS	A-13
BGM3050	E-100
BGM3100	E-100
BGM640044	E-100
BGM64006	E-100
BGM640066	E-100
BGM640068	E-100
BH864	N-117, N-119
BHA12E	N-120
BHA1E34R	N-120
BHA34E12R	N-120
BHSG1100	F-15
BIBD2/0-10	A-58
BIBD2/010MT	A-59
BIBD2/0-12	A-58
BIBD2/012MT	A-59
BIBD2/0-14	A-58
BIBD2/0-2	A-58
BIBD2/0-3	A-58
BIBD2/0-4	A-58
BIBD2/04MT	A-59
BIBD2/0-5	A-58
BIBD2/0-6	A-58
BIBD2/06MT	A-59
BIBD2/0-8	A-58
BIBD2/08MT	A-59
BIBD250-10	A-58
BIBD25010MT	A-59
BIBD250-12	A-58
BIBD25012MT	A-59
BIBD250-14	A-58
BIBD250-2	A-58
BIBD250-3	A-58
BIBD250-4	A-58
BIBD2504MT	A-59
BIBD250-5	A-58
BIBD250-6	A-58
BIBD2506MT	A-59
BIBD250-8	A-58
BIBD2508MT	A-59
BIBD350-10	A-58
BIBD35010MT	A-59
BIBD350-12	A-58
BIBD35012MT	A-59
BIBD350-14	A-58
BIBD350-2	A-58
BIBD350-3	A-58
BIBD350-4	A-58
BIBD3504MT	A-59
BIBD350-5	A-58
BIBD350-6	A-58
BIBD3506MT	A-59
BIBD350-8	A-58
BIBD3508MT	A-59
BIBD4-2	A-58
BIBD4-3	A-58
BIBD4-4	A-58
BIBD4-5	A-58
BIBD4-6	A-58
BIBD4-8	A-58
BIBD600-10	A-58
BIBD60010MT	A-59
BIBD600-12	A-58
BIBD60012MT	A-59
BIBD600-14	A-58
BIBD600-2	A-58
BIBD600-3	A-58
BIBD600-4	A-58
BIBD6004MT	A-59
BIBD600-5	A-58
BIBD600-6	A-58
BIBD6006MT	A-59
BIBD600-8	A-58

ALPHA-NUMERIC INDEX BY CATALOG NUMBER (Continued)

Catalog Number	Page #
BIBD6008MT	A-59
BIBD750-10	A-58
BIBD750-12	A-58
BIBD750-14	A-58
BIBD750-2	A-58
BIBD750-3	A-58
BIBD750-4	A-58
BIBD750-6	A-58
BIBD750-8	A-58
BIBS2/0-10	A-57
BIBS2/010MT	A-59
BIBS2/0-12	A-57
BIBS2/012MT	A-59
BIBS2/0-14	A-57
BIBS2/0-3	A-57
BIBS2/0-4	A-57
BIBS2/04MT	A-59
BIBS2/0-5	A-57
BIBS2/0-6	A-57
BIBS2/06MT	A-59
BIBS2/0-8	A-57
BIBS2/08MT	A-59
BIBS250-10	A-57
BIBS25010MT	A-59
BIBS250-12	A-57
BIBS25012MT	A-59
BIBS250-14	A-57
BIBS250-3	A-57
BIBS250-4	A-57
BIBS2504MT	A-59
BIBS250-5	A-57
BIBS250-6	A-57
BIBS2506MT	A-59
BIBS250-8	A-57
BIBS2508MT	A-59
BIBS350-10	A-57
BIBS35010MT	A-59
BIBS350-12	A-57
BIBS35012MT	A-59
BIBS350-14	A-57
BIBS3502DB	A-34
BIBS350-3	A-57
BIBS3503DB	A-34
BIBS350-4	A-57
BIBS3504DB	A-34
BIBS3504MT	A-59
BIBS350-5	A-57
BIBS3505DB	A-34
BIBS350-6	A-57
BIBS3506DB	A-34
BIBS3506MT	A-59
BIBS350-8	A-57
BIBS3508MT	A-59
BIBS4-3	A-57
BIBS4-4	A-57
BIBS4-5	A-57
BIBS4-6	A-57
BIBS4-8	A-57
BIBS5003DB	A-34
BIBS5004DB	A-34
BIBS5005DB	A-34
BIBS5006DB	A-34
BIBS600-10	A-57
BIBS60010MT	A-59
BIBS600-12	A-57
BIBS60012MT	A-59
BIBS600-14	A-57
BIBS600-3	A-57
BIBS600-4	A-57
BIBS6004MT	A-59
BIBS600-5	A-57
BIBS600-6	A-57
BIBS6006MT	A-59
BIBS600-8	A-57
BIBS6008MT	A-59
BIBS750-10	A-57
BIBS750-12	A-57
BIBS750-14	A-57
BIBS750-3	A-57
BIBS750-4	A-57
BIBS750-6	A-57
BIBS750-8	A-57
BIC2-4-750	K-75
BIC2-6-750	K-75
BIC2-8-750	K-75
BIC-4-350	K-75
BIC-4-500	K-75
BIC-6-350	K-75
BIC-6-500	K-75
BIC-8-350	K-75
BIC-8-500	K-75
BIPC1/0-2	A-39
BIPC350-350	A-39
BIPC350-4/0	A-39
BIPC4/0-1/0	A-39
BIPC4/0-6	A-39
BIPC500-4/0	A-39
BISR1/0	A-56
BISR1-DB	A-36
BISR2	A-56
BISR250	A-56
BISR250-DB	A-36
BISR3/0-DB	A-36
BISR350	A-56
BISR4-DB	A-36
BISR500	A-56
BIT2/0	A-56
BIT250	A-56
BIT350	A-56
BIT4	A-56
BIT600	A-56
BIT750	A-56
BITO2/0	A-56
BITO250	A-56
BITO350	A-56
BITO4	A-56
BITO600	A-56
BITO750	A-56
BK88001	N-111
BK88004	N-110
BK88007	N-113
BK88008	N-112
BK88020	N-114, N-116
BKC3540	N-117, N-119
BKD1000B	N-110
BKD1250B	N-110
BKD1500B	N-111
BKD2000B	N-111
BKD2500	N-112
BKD3000	N-112
BKD3500	N-112
BKD4000	N-112
BKD500B	N-110
BKD750B	N-110
BKLP2	N-116
BKLP2K1	N-116
BKLP6	N-115
BKOF540	N-119
BKOH2540	N-112
BKOH520A	N-117
BKOH540A	N-118
BKOM152	N-111
BKOM50125	N-110
BKOR14	N-114
BKOR152	N-114
BKOR50	N-114
BKOR520	N-114
BKOR75125	N-114
BKOS520	N-116
BKOS5290	N-115
BKOW520	N-113
BKP1000B	N-110
BKP1250B	N-110
BKP1500B	N-111
BKP2000B	N-111
BKP2500	N-112
BKP3000	N-112
BKP3500	N-112
BKP4000	N-112
BKP500B	N-110
BKP750B	N-110
BKPR7520	N-115
BKPR7540	N-117
BKPS50	N-115
BKS752B	N-110
BKSA50	N-115
BKSB50B	N-110
BKW52	N-113
BMY-BCH-MT	N-59
BP10PADKIT	N-88, N-89
BPC1000	F-12
BPC1125	F-12
BPC1187	F-12
BPC1250	F-12
BPC1375	F-12
BPC1500	F-12
BPC1687	F-12
BPC1875	F-12
BPC2000	F-12
BPC2375	F-12
BPC2500	F-12
BPC312	F-12
BPC3500	F-12
BPC375	F-12
BPC437	F-12
BPC500	F-12
BPC562	F-12
BPC625	F-12
BPC687	F-12
BPC750	F-12
BPC843	F-12
BPC875	F-12
BPD2-4-750	K-75
BPD2-6-750	K-75
BPD2-8-750	K-75
BPD-4-350	K-75
BPD-4-500	K-75
BPD-6-350	K-75
BPD-6-500	K-75
BPD-8-350	K-75
BPD-8-500	K-75
BPF65	N-119
BPH20	N-117, N-118
BPTE14-750	A-62
BPTE20-1000	A-62
BPTE22-750	A-62
BPTE26-500	A-62
BS10	B-47
BS14	B-47
BS16	B-47
BS-2006	E-86
BS-2007	E-86
BS-2008	E-86
BS-2009	E-86
BS-2010	E-86
BS-2011	E-86
BS-2012	E-86
BS-2013	E-86
BS-2014	E-86
BS-2015	E-86
BS-2016	E-86
BS-2017	E-86
BS-2018	E-86
BS-2019	E-86
BS-2020	E-86
BS-2021	E-86
BS-2024	E-86
BS-2025	E-86
BS-2026	E-86
BS-2027	E-86
BS-2028	E-86
BS-2029	E-86
BS-2030	E-86
BS-2031	E-86
BS-2032	E-86
BS-2033	E-86
BS-2034	E-86
BS-2068	E-86
BS-2069	E-86
BS-2070	E-86
BS-2105	E-86
BS-2106	E-86
BS-2107	E-86
BS-2108	E-86
BS-2109	E-86
BS-2110	E-86
BSC1000	F-11
BSC1125	F-11
BSC1375	F-11
BSC1500	F-11
BSC1875	F-11
BSC2000	F-11
BSC2375	F-11
BSC2500	F-11
BSC25002.5	F-11
BSC2H	N-122
BSC2H1C2DEBP	N-122
BSC2H2A1B1FEBP	N-122
BSC2H2C1DEBP	N-122
BSC2H3A2B	N-122

ALPHA-NUMERIC INDEX BY CATALOG NUMBER (Continued)

Catalog Number	Page #
BSC2H5A	N-122
BSC2H5B	N-122
BSC2L	N-123
BSC2L1C2DEBP	N-123
BSC2L2C1DEBP	N-123
BSC2L3A2B	N-123
BSC2L5A	N-123
BSC2L5B	N-123
BSC687	F-11
BSCWS40	N-122
BSCWS80	N-122
BSD2050	E-62
BSD2050N	E-62
BSD2050Y	E-62
BSSBC750-2-1	K-64
BSSBC750-3	K-65
BSSBC750-3-1	K-64
BSSBC750-4	K-65
BSSBC750-4-1	K-64
BSSBC750-4-2	K-64
BSSBC750-5	K-65
BSSBC750-6	K-65
BSSBC750-6-2	K-64
BSSBC750-7	K-65
BSSBC750-8	K-65
BSSI-20	K-71
BSSI-500	K-71
BSSI-500L	K-71
BTW150750	N-70
BTW1575F12	N-70
BTW30150	N-70
BTWTC500	K-71
BULF10HS	B-83
BULF10P	B-82
BULF14HS	B-83
BULF14N	B-82
BULF14NG	B-83
BULF14P	B-82
BULF18HS	B-83
BULF18N	B-82
BULF18NG	B-83
BULF18P	B-82
BULM10P	B-80
BULM14HS	B-81
BULM14N	B-80
BULM14NG	B-81
BULM14P	B-80
BULM18HS	B-81
BULM18N	B-80
BULM18NG	B-81
BULM18P	B-80
BWB680AG	E-70
BWB680IG	E-70
BWTE21-1000	A-61
BWTE21-500	A-61
BWTE21-750	A-61
BYNA245MRT15ACCC	I-50
BYNA245MRT15HACCC	I-47
BYNA245MRTACCC	I-50
BYNA32R15HHT	I-16, I-17
BYNA32R15HT	I-22
BYNA32RHT	I-22
BYNA32RT15ACCC	I-50
BYNA32RT15HACCC	I-47
BYNA32RT15HHT	I-18, I-19
BYNA32RT15HT	I-23
BYNA32RTACCC	I-50
BYNA32RTHT	I-23
BYNA34R15HHT	I-16, I-17
BYNA34R15HT	I-22
BYNA34RHT	I-22
BYNA34RT15HHT	I-18, I-19
BYNA34RT15HT	I-23
BYNA34RTHT	I-23
BYNA36R15HHT	I-16, I-17
BYNA36R15HT	I-22
BYNA36RHT	I-22
BYNA36RT15ACCC	I-50
BYNA36RT15HACCC	I-47
BYNA36RT15HHT	I-18, I-19
BYNA36RT15HT	I-23
BYNA36RTACCC	I-50
BYNA36RTHT	I-23
BYNA39R15HHT	I-16, I-17
BYNA39R15HT	I-22
BYNA39RHT	I-22
BYNA39RT15ACCC	I-50
BYNA39RT15HACCC	I-47
BYNA39RT15HHT	I-18, I-19
BYNA39RT15HT	I-23
BYNA39RTACCC	I-50
BYNA39RTHT	I-23
BYNA43R15HHT	I-16, I-17
BYNA43R15HT	I-22
BYNA43RHT	I-22
BYNA43RT15ACCC	I-50
BYNA43RT15HACCC	I-47
BYNA43RT15HHT	I-18, I-19
BYNA43RT15HT	I-23
BYNA43RTACCC	I-50
BYNA43RTHT	I-23
BYNA451R15HHT	I-16, I-17
BYNA451R15HT	I-22
BYNA451RHT	I-22
BYNA451RT15ACCC	I-50
BYNA451RT15HACCC	I-47
BYNA451RT15HHT	I-18, I-19
BYNA451RT15HT	I-23
BYNA451RTACCC	I-50
BYNA451RTHT	I-23
BYNA49R15HHT	I-16, I-17
BYNA49R15HT	I-22
BYNA49RHT	I-22
BYNA49RT15ACCC	I-50
BYNA49RT15HACCC	I-48
BYNA49RT15HHT	I-18, I-19
BYNA49RT15HT	I-23
BYNA49RTACCC	I-50
BYNA49RTHT	I-23
BYNA52R15HHT	I-16, I-17
BYNA52R15HT	I-22
BYNA52RHT	I-22
BYNA52RT15ACCC	I-50
BYNA52RT15HACCC	I-48
BYNA52RT15HHT	I-18, I-19
BYNA52RT15HT	I-23
BYNA52RTACCC	I-50
BYNA52RTHT	I-23
BYNA56R15HHT	I-16, I-17
BYNA56R15HT	I-22
BYNA56RHT	I-22
BYNA56RT15HHT	I-18, I-19
BYNA56RT15HT	I-23
BYNA56RTHT	I-23
BYNA58R15HHT	I-16, I-17
BYNA58R15HT	I-22
BYNA58RHT	I-22
BYNA58RT15HHT	I-18, I-19
BYNA58RT15HT	I-23
BYNA58RTHT	I-23
BYNA590MRT15ACCC	I-50
BYNA590MRT15HACCC	I-48
BYNA590MRTACCC	I-50
BYNA59R15HHT	I-16, I-17
BYNA59R15HT	I-22
BYNA59RHT	I-22
BYNA59RT15HHT	I-18, I-19
BYNA59RT15HT	I-23
BYNA59RTHT	I-23
BYNA760MRT15ACCC	I-50
BYNA760MRT15HACCC	I-48
BYNA760MRTACCC	I-50
BYNS32RHT	I-24
BYNS32RTHT	I-25
BYNS34RHT	I-24
BYNS34RTHT	I-25
BYNS36RHT	I-24
BYNS36RTHT	I-25
BYNS39RHT	I-24
BYNS39RTHT	I-25
BYNS43RHT	I-24
BYNS43RTHT	I-25
BYNS451RHT	I-24
BYNS451RTHT	I-25
BYNS49RHT	I-24
BYNS49RTHT	I-25
BYNS52RHT	I-24
BYNS52RTHT	I-25
BYNS56RHT	I-24
BYNS56RTHT	I-25
BYNS58RHT	I-24
BYNS58RTHT	I-25
BYNS59RHT	I-24
BYNS59RTHT	I-25
C-11B	E-43
C-11CSH-1	E-47
C-11CSH-2	E-47
C-11CSH-3	E-47
C11CSLH12	E-47
C-11D	E-43
C11HD4/0DB	E-45
C-11JA	E-45
C-11JPT	E-43
C11K16D	E-44
C11K17D	E-44
C-11LH-1	E-47
C-11LH-2	E-47
C-11LH-3	E-47
C-11N	E-43
C-22	E-43
C-22D	E-43
C22HD4/0DB	E-45
C-22JA	E-45
C-22JPT	E-43
C-22LH-1	E-47
C-22LH-2	E-47
C-22LH-3	E-47
C-4	E-43
C-4JA	E-45
C-4JPT	E-43
C-4LH-1	E-47
C-4LH-2	E-47
C-4LH-3	E-47
C-5	E-43
C-6	E-46
C-61	E-46
C-66	E-46
C-6D	E-46
C-7	E-46
C-8	E-43
CASEWDIES	N-66
CCD	H-26
CCFBG-FR	C-135
CCFD-FR	C-131, C-135
CCFDXFR	C-131
CCFDX-FR	C-135
CCFN-FR	C-131, C-135
CCFO-FR	C-131, C-135
CCFR-FR	C-131, C-135
CCN	H-26
CCNL	H-26
CCO	H-26
CFAD	C-155
CFAD-FR	C-155
CFAN	C-155
CFAN-FR	C-155
CFANL	C-155
CFANL-FR	C-155
CFAO-FR	C-155
CFAR	C-155
CFAR-FR	C-155
CFBG-FR	C-135
CFD-FR	C-131, C-135
CFN-FR	C-131, C-135
CFO-FR	C-131, C-135
CFR-FR	C-131, C-135
CH10C	G-19
CH10M	G-19
CH11C	G-19
CH11M	G-19
CH12C	G-19
CH12M	G-19
CH14C	G-19
CH14M	G-19
CH16C	G-19
CH16M	G-19
CH18C	G-19
CH18M	G-19
CH24C	G-19
CH24L	G-19
CH2C	G-19
CH2M	G-19
CH3C	G-19
CH3M	G-19
CH4C	G-19
CH4M	G-19
CH5C	G-19
CH5M	G-19
CH6C	G-19
CH6M	G-19

ALPHA-NUMERIC INDEX BY CATALOG NUMBER (Continued)

Catalog Number	Page #
CH7C	G-19
CH7M	G-19
CH8C	G-19
CH8M	G-19
CH9C	G-19
CH9M	G-19
CL1/0-14TN	A-14, E-31
CL250-516TN	A-14, E-31
CL3/0-516TN	A-14, E-31
CL50-1	A-14, E-31
CL50-1TN	A-14, E-31
CL50-1TNBULK	E-31
CM2829P	K-35
CM2929P	K-35
CM29L	K-35
CM3029P	K-35
CM3229P	K-35
CM3429P	K-35
CM3629P	K-35
CP2525	H-13
CP2626	H-13
CP26A26A	H-11
CP27A27A	H-11
CP2828	H-13
CP28A28A	H-11
CP2929	H-13
CP29A29A	H-11
CP2C2C	H-13
CP30A30A	H-11
CP31A31A	H-11
CP32A32A	H-11
CP3434	H-13
CP34A34A	H-11
CP37A37A	H-11
CPB10	A-45
CPB12	A-45
CPB14	A-45
CPB16-5/8	A-45
CPB21-1/4	A-45
CPB6	A-45
CPB8	A-45
CPT10	A-45
CPT12	A-45
CPT16	A-45
CPT6	A-45
CPT8	A-45
CT110200SSBB	G-14
CT110200SSBB0	G-14
CT110200SSBC	G-14
CT110200SSBC0	G-14
CT110300SSBC	G-14
CT110300SSBC0	G-14
CT110300SSBL	G-14
CT110300SSBL0	G-14
CT110325SSBB	G-14
CT110325SSBB0	G-14
CT110325SSBC	G-14
CT110325SSBC0	G-14
CT110350SSBC	G-14
CT110350SSBC0	G-14
CT110350SSBL	G-14
CT110350SSBL0	G-14
CT110400SSBC	G-14
CT110400SSBC0	G-14
CT110400SSBL	G-14
CT110400SSBL0	G-14
CT110500SSBC	G-14
CT110500SSBC0	G-14
CT110500SSBL	G-14
CT110500SSBL0	G-14
CT110600SSBC	G-14
CT110600SSBC0	G-14
CT110600SSBL	G-14
CT110600SSBL0	G-14
CT110800SSBC	G-14
CT110800SSBC0	G-14
CT110800SSBL	G-14
CT110800SSBL0	G-14
CT120200D	G-7
CT120200D0	G-7
CT120200L	G-7
CT120200L0	G-7
CT120200L0UG	G-8
CT120300D	G-7
CT120300D0	G-7
CT120300L	G-7
CT120300L0	G-7
CT120300SSBC	G-14
CT120300SSBC0	G-14
CT120300SSBL	G-14
CT120300SSBL0	G-14
CT120350SSBC	G-14
CT120350SSBC0	G-14
CT120350SSBL	G-14
CT120350SSBL0	G-14
CT120400C0UG	G-8
CT120400D	G-5, G-7
CT120400D0	G-7
CT120400D00	G-5
CT120400L	G-5, G-7
CT120400L0	G-7
CT120400L00	G-5
CT120400L0UG	G-8
CT120400LUG	G-8
CT120400MH14D	G-12
CT120400MH14D0	G-12
CT120400MH14L	G-12
CT120400MH14L0	G-12
CT120400SSBC	G-14
CT120400SSBC0	G-14
CT120400SSBL	G-14
CT120400SSBL0	G-14
CT120500CUG	G-8
CT120500D0UG	G-8
CT120500SSBC	G-14
CT120500SSBC0	G-14
CT120500SSBL	G-14
CT120500SSBL0	G-14
CT120800L	G-7
CT120800L0	G-7
CT120900D	G-5
CT120900D00	G-5
CT120900L	G-5
CT120900L00	G-5
CT120900LUG	G-8
CT1751100Q	G-7
CT1751100Q0	G-7
CT1751100Q0UG	G-8
CT1751100QUG	G-8
CT1751400QUG	G-8
CT175400Q	G-5
CT175400Q0UG	G-8
CT175500Q	G-7
CT175500Q0	G-7
CT175600Q	G-5, G-7
CT175600Q0	G-7
CT175600Q00	G-5
CT175600Q0UG	G-8
CT175600QUG	G-8
CT175900Q	G-5, G-7
CT175900Q0	G-7
CT175900Q00	G-5
CT175900Q0UG	G-8
CT18075C	G-5, G-6
CT18075C0	G-6
CT18075C00	G-5
CT18075C0UG	G-8
CT18075CUG	G-8
CT18075FLC	G-11
CT18075IDC	G-5, G-11
CT18075M	G-5, G-6
CT18075M0	G-6
CT18075M00	G-5
CT18075M0UG	G-8
CT18075MH4C	G-12
CT18075MH4C0	G-12
CT18075MH4M	G-12
CT18075MUG	G-8
CT18100SSBC	G-13
CT18100SSBC0	G-13
CT18100SSBM	G-13
CT18100SSBM0	G-13
CT18125C	G-6
CT18125C0	G-6
CT18125M	G-6
CT18125M0	G-6
CT18200C	G-6
CT18200C0	G-6
CT18200C0UG	G-8
CT18200M	G-6
CT18200M0	G-6
CT18200MUG	G-8
CT18200SSBC	G-13
CT18200SSBC0	G-13
CT18200SSBM	G-13
CT18200SSBM0	G-13
CT2501000Q	G-7
CT2501000Q0	G-7
CT2501000RQ	G-10
CT2501000RQ0	G-10
CT2501200Q	G-7
CT2501200Q0	G-7
CT2501200RQ0	G-10
CT250200RQ	G-10
CT250200RQ0	G-10
CT250500RQ	G-10
CT250500RQ0	G-10
CT250600Q	G-7
CT250600Q0	G-7
CT250600RQ	G-10
CT250600RQ0	G-10
CT250800Q	G-7
CT250800Q0	G-7
CT250800Q0UG	G-8
CT250800RQ	G-10
CT250800RQ0	G-10
CT30125C	G-5, G-6
CT30125C0	G-6
CT30125C00	G-5
CT30125C0UG	G-8
CT30125CUG	G-8
CT30125M	G-5, G-6
CT30125M0	G-6
CT30125M00	G-5
CT30125MH8C	G-12
CT30125MH8C0	G-12
CT30125MH8M	G-12
CT30125MUG	G-8
CT40137SSBC	G-13
CT40137SSBC0	G-13
CT40137SSBM	G-13
CT40137SSBM0	G-13
CT40200C	G-6
CT40200C0	G-6
CT40200CUG	G-8
CT40200M	G-6
CT40200M0	G-6
CT40200MUG	G-8
CT40200SSBC	G-13
CT40200SSBC0	G-13
CT40200SSBD	G-13
CT40200SSBD0	G-13
CT40300C	G-6
CT40300C0	G-6
CT40300M	G-6
CT40300M0	G-6
CT40300SSBC	G-13
CT40300SSBC0	G-13
CT40300SSBD	G-13
CT40300SSBD0	G-13
CT40400C	G-6
CT40400C0	G-6
CT40400C0UG	G-8
CT40400M	G-6
CT40400M0	G-6
CT40400SSBC	G-13
CT40400SSBC0	G-13
CT40400SSBD	G-13
CT40400SSBD0	G-13
CT50137EPRC	G-10
CT50137EPRC0	G-10
CT50137RC	G-10
CT50137RC0	G-10
CT50175C	G-5, G-6
CT50175C0	G-6
CT50175C00	G-5
CT50175C0UG	G-8
CT50175CUG	G-8
CT50175ID2L	G-5, G-11
CT50175ID3L	G-5, G-11
CT50175IDC	G-5, G-11
CT50175M	G-5, G-6
CT50175M0	G-6
CT50175M00	G-5
CT50175M0UG	G-8
CT50175MH10C	G-12
CT50175MH10C0	G-12
CT50175MH10C0UG	G-9
CT50175MH10CUG	G-9
CT50175MH10M	G-12

ALPHA-NUMERIC INDEX BY CATALOG NUMBER (Continued)

Catalog Number	Page #
CT50175MH10M0	G-12
CT50175MUG	G-8
CT50175RC	G-10
CT50175RC0	G-10
CT50175SSBC	G-13
CT50175SSBC0	G-13
CT50175SSBD	G-13
CT50175SSBD0	G-13
CT50200SSBB	G-13
CT50200SSBB0	G-13
CT50200SSBC	G-13
CT50200SSBC0	G-13
CT50250EPRC	G-10
CT50250EPRC0	G-10
CT50250SSBB	G-13
CT50250SSBB0	G-13
CT50250SSBC	G-13
CT50250SSBC0	G-13
CT50300C	G-5, G-6
CT50300C0	G-6
CT50300C00	G-5
CT50300C0UG	G-8
CT50300CUG	G-8
CT50300M	G-5, G-6
CT50300M0	G-6
CT50300M00	G-5
CT50300M0UG	G-8
CT50300MH10C0UG	G-9
CT50300MH10GUG	G-9
CT50300MUG	G-8
CT50300SSBB	G-13
CT50300SSBB0	G-13
CT50300SSBC	G-13
CT50300SSBC0	G-13
CT50400C	G-5, G-6
CT50400C0	G-6
CT50400C00	G-5
CT50400C0UG	G-8
CT50400CUG	G-8
CT50400IDC	G-5
CT50400M	G-5, G-6
CT50400M0	G-6
CT50400M00	G-5
CT50400MH10C	G-12
CT50400MH10C0	G-12
CT50400MH10M0	G-12
CT50400RC	G-10
CT50400RC0	G-10
CT50425SSBB	G-14
CT50425SSBB0	G-14
CT50425SSBC	G-14
CT50425SSBC0	G-14
CTASST	G-26
CTB075AA4C	G-18
CTB075RA4C	G-18
CTB075RA4CUG	G-9
CTB075RA4M	G-18
CTB075S4C	G-18
CTB125AA4C	G-18
CTB125RA2C	G-18
CTB125RA4C	G-18
CTB125RA4CUG	G-9
CTB125RA4D	G-18
CTB125RA4DUG	G-9
CTB125RA4L	G-18
CTB125S2C	G-18
CTB125S4C	G-18
CTB150AA4C	G-18
CTB150RA4B	G-18
CTB150RA4C	G-18
CTB150S4B	G-18
CTH30200C	G-15
CTH50175C	G-15
CTH50175M	G-15
CTHS120400M	G-16
CTHS140125M	G-16
CTHS18075M	G-16
CTHS50300M	G-16
CTHS50400M	G-16
CTHS50700M	G-16
CTSS100100FC304C	G-22
CTSS100100FC316C	G-23
CTSS100200FC304C	G-22
CTSS100200FC316C	G-23
CTSS100300FC304C	G-22
CTSS100300FC316C	G-23
CTSS100400FC304C	G-22
CTSS100400FC316C	G-23
CTSS100500FC304C	G-22
CTSS100500FC316C	G-23
CTSS100600FC304C	G-22
CTSS100600FC316C	G-23
CTSS100800FC304C	G-22
CTSS100800FC316C	G-23
CTSS225100304C	G-20
CTSS225100316C	G-21
CTSS225200304C	G-20
CTSS225200316C	G-21
CTSS225300304C	G-20
CTSS225300316C	G-21
CTSS225400304C	G-20
CTSS225400316C	G-21
CTSS225500304C	G-20
CTSS225500316C	G-21
CTSS225600304C	G-20
CTSS225600316C	G-21
CTSS250200FC304L	G-22
CTSS250200FC316L	G-23
CTSS250200PC304L	G-24
CTSS250200PC316L	G-25
CTSS250300FC304L	G-22
CTSS250300FC316L	G-23
CTSS250300PC304L	G-24
CTSS250300PC316L	G-25
CTSS250400FC304L	G-22
CTSS250400FC316L	G-23
CTSS250400PC304L	G-24
CTSS250400PC316L	G-25
CTSS250500FC304L	G-22
CTSS250500FC316L	G-23
CTSS250500PC304L	G-24
CTSS250500PC316L	G-25
CTSS250600FC304L	G-22
CTSS250600FC316L	G-23
CTSS250600PC304L	G-24
CTSS250600PC316L	G-25
CTSS250700FC304L	G-22
CTSS250700FC316L	G-23
CTSS250700PC304L	G-24
CTSS250700PC316L	G-25
CTSS250800FC304L	G-22
CTSS250800FC316L	G-23
CTSS250800PC304L	G-24
CTSS250800PC316L	G-25
CTSS450200FC304L	G-22
CTSS450200FC316L	G-23
CTSS450200PC304L	G-24
CTSS450200PC316L	G-25
CTSS450300FC304L	G-22
CTSS450300FC316L	G-23
CTSS450300PC304L	G-24
CTSS450300PC316L	G-25
CTSS450400FC304L	G-22
CTSS450400FC316L	G-23
CTSS450400PC304L	G-24
CTSS450400PC316L	G-25
CTSS450500FC304L	G-22
CTSS450500FC316L	G-23
CTSS450500PC304L	G-24
CTSS450500PC316L	G-25
CTSS450600FC304L	G-22
CTSS450600FC316L	G-23
CTSS450600PC304L	G-24
CTSS450600PC316L	G-25
CTSS450700FC304L	G-22
CTSS450700FC316L	G-23
CTSS450700PC304L	G-24
CTSS450700PC316L	G-25
CTSS450800FC304L	G-22
CTSS450800FC316L	G-23
CTSS450800PC304L	G-24
CTSS450800PC316L	G-25
CTSS500200304L	G-20
CTSS500200316C	G-21
CTSS500300304L	G-20
CTSS500300316C	G-21
CTSS500400304L	G-20
CTSS500400316L	G-21
CTSS500500304L	G-20
CTSS500500316L	G-21
CTSS500600304L	G-20
CTSS500600316L	G-21
CTSS500700304L	G-20
CTSS500700316L	G-21
CTSS500750304L	G-20
CTSS500750316L	G-21
CTSS500800304L	G-20
CTSS500800316L	G-21
CTSS675200FC304Q	G-22
CTSS675200FC316Q	G-23
CTSS675200PC304Q	G-24
CTSS675200PC316Q	G-25
CTSS675300FC304Q	G-22
CTSS675300FC316Q	G-23
CTSS675300PC304Q	G-24
CTSS675300PC316Q	G-25
CTSS675400FC304Q	G-22
CTSS675400FC316Q	G-23
CTSS675400PC304Q	G-24
CTSS675400PC316Q	G-25
CTSS675500FC304Q	G-22
CTSS675500FC316Q	G-23
CTSS675500PC304Q	G-24
CTSS675500PC316Q	G-25
CTSS675600FC304Q	G-22
CTSS675600FC316Q	G-23
CTSS675600PC304Q	G-24
CTSS675600PC316Q	G-25
CTSS675700FC304Q	G-22
CTSS675700FC316Q	G-23
CTSS675700PC304Q	G-24
CTSS675700PC316Q	G-25
CTSS675800FC304Q	G-22
CTSS675800FC316Q	G-23
CTSS675800PC304Q	G-24
CTSS675800PC316Q	G-25
CTSS700200304L	G-20
CTSS700200316L	G-21
CTSS700300304L	G-20
CTSS700300316L	G-21
CTSS700400304L	G-20
CTSS700400316L	G-21
CTSS700500304L	G-20
CTSS700500316L	G-21
CTSS700600304L	G-20
CTSS700600316L	G-21
CTSS700700304L	G-20
CTSS700700316L	G-21
CTSS700800304L	G-20
CTSS700800316L	G-21
CTSS900	G-26
CTSS900200304L	G-20
CTSS900200316L	G-21
CTSS900300304L	G-20
CTSS900300316L	G-21
CTSS900400304L	G-20
CTSS900400316L	G-21
CTSS900500304L	G-20
CTSS900500316L	G-21
CTSS900600304L	G-20
CTSS900600316L	G-21
CTSS900700304L	G-20
CTSS900700316L	G-21
CTSS900800304L	G-20
CTSS900800316L	G-21
CTT50	G-26
CTZ120400D	G-15
CTZ120400L	G-15
CTZ18075C	G-15
CTZ30200C	G-15
CTZ50175C	G-15
CUSA442NTC	C-142
CUSA442TC38	C-142
CUT200BLMVBL	N-76, N-77
CUT200BLSTA	N-76, N-77
CUW26RE-1	H-71
CUW30A-E	H-71
CUW32R-E	H-71
CUW34-E	H-70
CUW361R-E	H-71
CUW391A-E	H-71
CUW44-E	H-70
CZ-11	E-44
D26L/Y29PR	N-69
D3CL/Y29PR	N-69
D6CL/Y29PL	N-69
DUW28	H-70
DUW28A	H-71
DUW31	H-70
DUW34	H-70

ALPHA-NUMERIC INDEX BY CATALOG NUMBER (Continued)

Catalog Number	Page #
DUW44	H-70
DUW44A	H-71
DUW44A-E	H-71
DV1L/Y29PR	N-69
DV25L/Y29PR	N-69
DV26L/Y29PR	N-69
DV2CL/Y29PL	N-69
DV4L/Y29PL	N-69
DV6LY29PL	N-69
DV8L/Y29PL	N-69
E2C34G1	A-19, H-40, L-22
E3C34G1	A-19, H-40, L-22
E4C34G1	A-19, H-40, L-22
EA25	A-12
EA28	A-12
EA28-2N	A-12
EA2C	A-12
EA34	A-12
EA34-2N	A-12
EBP	N-122, N-123
EP10	N-93
EP10-1HP	N-94
EP10-1HP-2	N-94
EP10-2	N-93
EP6	N-93
EP8	N-93
EPAC10	N-92
EPAC-6	N-92
EPAC-8	N-92
EPP10	N-91
EPP6	N-91
EPPCASE-1	N-91
ES25A25A	H-45
ES25A2W	H-45
ES25A4W	H-45
ES25R25R	H-45
ES25R2R	H-45
ES25R2W	H-45
ES25R4W	H-45
ES25R6W	H-45
ES2R2R	H-45
ES2R2W	H-45
ES2R4W	H-45
ES2R6W	H-45
ES2R8W	H-45
ES2W2W	H-45
ES2W4W	H-45
ES2W6W	H-45
ES2W8W	H-45
ES4W4W	H-45
ES4W6W	H-45
ES4W8W	H-45
ES6W6W	H-45
ES6W8W	H-45
ES8W8W	H-45
F22A28	K-74
FCB63-2NP300	A-37, L-22
FCB63-4N	A-37, L-22
FCB63-6N	A-37, L-22
FCB64-2NP300	L-22
FCB64-44NP50	A-37, L-22
FCB644G4	L-22
FCB64-4N	A-37, L-22
FCB64-6N	A-37, L-22
FCB65-4N	A-37, L-22
FD64C5T16	L-20
FD655C6	L-20
FD655D6	L-20
FD65C6T14	L-20
FD66C6	L-20
FD66D6	L-20
FD675C8	L-20
FD675D8	L-20
FD685C8	L-20
FD685D12	L-20
FD685D8	L-20
FD68C8	L-20
FD68D12	L-20
FD68D8	L-20
FD69C8	L-20
FD69D12	L-20
FD69D8	L-20
FD70D12	L-20
FD70D16	L-20
FL1025X03B	B-74
FL1025X03D	B-74
FL1425X03B	B-74
FL1425X03D	B-74
FL1825X03B	B-74
FL1825X03D	B-74
FLN1025X03D	B-74
FLN1425X03D	B-74
FLN1825X03D	B-74
FORCEGAUGE12-15	N-8, N-25
FP10	N-89
FP6	N-89
FP8	N-89
FQN10M25X03B	B-67
FQN10M25X03D	B-67
FQN14M18X02D	B-67
FQN14M25X03B	B-67
FQN14M25X03D	B-67
FQN18M18X02D	B-67
FQN18M25X03B	B-67
FQN18M25X03D	B-67
FQP10F25X03D	B-64
FQP14F11X03D	B-64
FQP14F18X02D	B-64
FQP14F25X03D	B-64
FQP18F11X03D	B-64
FQP18F18X02D	B-64
FQP18F25X03D	B-64
FT3B4/0	A-41
FT3B500	A-41
FT4B4/0	A-41
FT4B500	A-41
GA25H26	E-64
GAR1126	E-34
GAR1129	E-34
GAR114C	E-34
GAR1426	E-34
GAR1429	E-34
GAR1434	E-34
GAR144C	E-34
GAR1526	E-34
GAR1529	E-34
GAR1534	E-34
GAR154C	E-34
GAR1626	E-34
GAR1629	E-34
GAR1634	E-34
GAR164C	E-34
GAR1726	E-35
GAR1729	E-35
GAR1734	E-35
GAR174C	E-35
GAR1826	E-35
GAR1829	E-35
GAR1834	E-35
GAR184C	E-35
GAR1926	E-35
GAR1929	E-35
GAR1934	E-35
GAR194C	E-35
GAR2026	E-35
GAR2029	E-35
GAR2034	E-35
GAR204C	E-35
GAR2126	E-35
GAR2129	E-35
GAR2134	E-35
GAR214C	E-35
GAR2226	E-35
GAR2229	E-35
GAR2234	E-35
GAR224C	E-35
GAR2426	E-35
GAR2429	E-35
GAR2434	E-35
GAR244C	E-35
GAR3902	E-36
GAR3902-BU	E-36
GAR3902TC	E-37
GAR3903	E-36
GAR3903-BU	E-36
GAR3903TC	E-37
GAR3904	E-36
GAR3904-BU	E-36
GAR3904TC	E-37
GAR3905	E-36
GAR3905-BU	E-36
GAR3905TC	E-37
GAR3906	E-36
GAR3906-BU	E-36
GAR3906TC	E-37
GAR3907	E-36
GAR3907-BU	E-36
GAR3907TC	E-37
GAR3908	E-36
GAR3908-BU	E-36
GAR3908TC	E-37
GAR3909	E-36
GAR3909-BU	E-36
GAR3909TC	E-37
GAR6426	E-34
GAR6429	E-34
GAR6434	E-34
GAR644C	E-34
GAR644C-RB	E-36
GAR8629	E-35
GAR8634	E-35
GB26	E-57
GB29	E-57
GB34	E-57
GB4C	E-57
GBL30N	E-57
GBM26	E-57
GBM29	E-57
GBM34	E-57
GBM4C	E-57
GC15A	E-48
GC18A	E-48
GC22A	E-48
GC2525CT	E-59
GC2626	E-57
GC2626CT	E-59
GC2929	E-57
GC2929CT	E-59
GC3434	E-57
GC4C4C	E-57
GCB63T13G1	E-61
GCL30	E-57
GCM26	E-57
GCM29	E-57
GCM30	E-57
GCM34	E-57
GCM4C	E-57
GCRT1/0	E-51
GD1526	E-38
GD1529	E-38
GD1626	E-38
GD1629	E-38
GD1726	E-38
GD1729	E-38
GD1734	E-38
GD174C	E-38
GD1826	E-38
GD1829	E-38
GD1834	E-38
GD184C	E-38
GD1926	E-38
GD1929	E-38
GD1934	E-38
GD194C	E-38
GD2026	E-38
GD2029	E-38
GD2034	E-38
GD204C	E-38
GD2126	E-38
GD2129	E-38
GD2134	E-38
GD214C	E-38
GD2226	E-38
GD2229	E-38
GD2234	E-38
GD224C	E-38
GG15-1	E-49
GG16-1	E-49
GG17-1	E-49
GG17-15	E-49
GG18-1	E-49
GG18-15	E-49
GG18-2	E-49
GG19-2	E-49
GG19-25	E-49
GG20-2	E-49
GG20-25	E-49
GG20-3	E-49
GG21-2	E-49
GG21-25	E-49

ALPHA-NUMERIC INDEX BY CATALOG NUMBER (Continued)

Catalog Number	Page #
GG21-3	E-49
GG21-35	E-49
GG22-2	E-49
GG22-25	E-49
GG22-3	E-49
GG22-4	E-49
GG24-2	E-49
GIE2CG3	E-60
GIE4CG3	E-60
GIE4CG3P5	E-60
GIE4CG3P7	E-60
GIE4CG4	E-60
GIE4CG4P5	E-60
GIE4CG4P7	E-60
GK1126	E-40
GK1129	E-40
GK114C	E-40
GK1426	E-40
GK1429	E-40
GK1434	E-40
GK1526	E-40
GK1529	E-40
GK1626	E-40
GK1629	E-40
GK1726	E-40
GK1729	E-40
GK1826	E-40
GK1829	E-40
GK1926	E-40
GK1929	E-40
GK6426	E-40
GK6429	E-40
GK6434	E-40
GK644C	E-40
GKA25	E-30
GKA25SB	E-30
GKA28	E-30
GKA28SB	E-30
GKA4C	E-30
GKA8C	E-30
GL2626	E-58
GL2929	E-58
GL3434	E-58
GL4C4C	E-58
GP10	N-95
GP1126	E-39
GP1129	E-39
GP114C	E-39
GP1426	E-39
GP1429	E-39
GP1434	E-39
GP144C	E-39
GP1526G1	E-67
GP1629	E-39
GP164C	E-39
GP1726	E-39
GP1726G1	E-67
GP1726RT	E-67
GP1826	E-39
GP184C	E-39
GP2026	E-39
GP2226	E-39
GP6426	E-39
GP6429	E-39
GP6434	E-39
GP644C	E-39
GP64526G1	E-67
GP654CG1	E-67
GQ26-1	E-50
GQ2626	E-50
GQ29-1	E-50
GQ2929	E-50
GRC12	E-51
GRC34	E-51
GRC58	E-51
GRF4C-3	E-66
GRF4C-4	E-66
GRL3	E-51
GRL4	E-51
GRL5	E-51
GRL6	E-51
GROUNDMAX	E-98
GROUNDTAB1/2	E-18
GROUNDTAB3/8	E-18
GSTUD14HY	E-24
GSTUD34HY	E-24
GSTUD38HY	E-24
GSTUD916HY	E-24
GX2626	E-50
GX264C	E-50
GX2926	E-50
GX2929	E-50
GX294C	E-50
GX3426	E-50
GX3429	E-50
GX3434	E-50
GX344C	E-50
GX4C4C	E-50
GXP1828RF	E-65
GZ26-12	E-58
GZ26-38	E-58
GZ26-58	E-58
GZ29-12	E-58
GZ29-38	E-58
GZ29-58	E-58
GZ4C-12	E-58
GZ4C-38	E-58
GZ4C-58	E-58
H12E	N-120
H1E34R	N-120
H34E12R	N-120
HBR40	N-103
HBR66	N-103
HCCACSR	N-71, N-82
HCCCUAL	N-71, N-82
HCCGUY	N-71, N-82
HCCSOL	N-71, N-82
HFB22P1	A-21, L-24
HFB33-4N	A-22, L-24
HFB33P1	A-21, L-24
HFB42P1	A-21, L-24
HFB44-4N	A-22, L-24
HFB44G30W	L-23
HFB44G31W	L-23
HFB44G32W	L-23
HFB44P1	A-21, L-24
HFB52P1	L-24
HFB53P1	L-24
HFB54P1	L-24
HFB55P1	L-24
HFB62P1	L-24
HFB63P1	A-21, L-24
HFB64P1	L-24
HFB66-6N	A-22, L-24
HFB66P1	A-21
HFB88P1	A-21
HH5-RL48	N-27
HHS-O/C-4-B13	N-106
HHS-O/C-5-B13	N-106
HHS-O/C-B13	N-106
HHS-O/C-B16	N-106
HHS-O/C-B20	N-106
HIW12SOCSET	N-109
HIW71612TGKIT	N-109
HIW716ENF	N-98
HIW716ENFTG	N-98
HIW716ENFTGKIT	N-98
HIW716MAG	N-99
HOSE2	N-104
HOSE325	N-104
HOSE350	N-104
HP10	N-88
HP2CAMLOCKHOSESET	N-104
HP2HV	N-104
HP3	N-104
HP6	N-88
HP8	N-88
HPP18	N-108
HPP18-2	N-108
HPP5	N-108
HPS1371LW	N-107
HPS1383LW	N-107
HPT-59-R1	N-105
HPT-60-R1	N-105
HPT-71-R1	N-105
HPT-72-R1	N-105
HPT-83-R1	N-105
HPT-84-R1	N-105
HPT-96-R1	N-105
HS_100FR	F-14
HS_100FR100	F-14
HS_100T300PF	F-8
HS_100T48PF	F-7
HS_112FR	F-14
HS_112FR100	F-14
HS_116T300PF	F-8
HS_116T48PF	F-7
HS_12FR	F-14
HS_12FR250	F-14
HS_12T300PF	F-8
HS_12T48PF	F-7
HS_14FR	F-14
HS_14FR250	F-14
HS_14T300PF	F-8
HS_14T48PF	F-7
HS_150T48PF	F-7
HS_18FR	F-14
HS_18FR250	F-14
HS_18T300PF	F-8
HS_18T48PF	F-7
HS_200FR	F-14
HS_200FR100	F-14
HS_200T48PF	F-7
HS_316T300PF	F-8
HS_316T48PF	F-7
HS_332T300PF	F-8
HS_332T48PF	F-7
HS_34FR	F-14
HS_34FR250	F-14
HS_34T300PF	F-8
HS_34T48PF	F-7
HS_38FR	F-14
HS_38FR250	F-14
HS_38T300PF	F-8
HS_38T48PF	F-7
HSB100T6PF7	F-6
HSB110H48PF5	F-9
HSB110H6PF5	F-9
HSB110H9PF5	F-9
HSB11612T6PF14	F-6
HSB116T6PF26	F-6
HSB12T6PF10	F-6
HSB14T6PF14	F-6
HSB150H12PF3	F-9
HSB150H48PF5	F-9
HSB150H9PF3	F-9
HSB18T6PF20	F-6
HSB200H12PF2	F-9
HSB200H48PF2	F-9
HSB200H9PF2	F-9
HSB316T6PF18	F-6
HSB332T6PF24	F-6
HSB34H48PF5	F-9
HSB34H6PF10	F-9
HSB34H9PF10	F-9
HSB34T6PF8	F-6
HSB35H3PF25	F-9
HSB35H48PF5	F-9
HSB35H6PF25	F-9
HSB38100T6PF8	F-6
HSB38T6PF12	F-6
HSC100FR	F-13
HSC100FR100	F-13
HSC112FR	F-13
HSC112FR100	F-13
HSC12FR	F-13
HSC12FR250	F-13
HSC14FR	F-13
HSC14FR250	F-13
HSC18FR	F-13
HSC18FR250	F-13
HSC200FR	F-13
HSC200FR100	F-13
HSC34FR	F-13
HSC34FR250	F-13
HSC38FR	F-13
HSC38FR250	F-13
HSIC10-500FR	F-10
HSIC200FR	F-10
HSIC30-1000FR	F-10
HSIC350FR	F-10
HSIC4-40FR	F-10
HSIC8-1FR	F-10
HSKIT	B-91
HSM100T6PF7	F-6
HSM116T6PF26	F-6
HSM12T6PF10	F-6
HSM14T6PF14	F-6
HSM18T6PF20	F-6
HSM316T6PF18	F-6

ALPHA-NUMERIC INDEX BY CATALOG NUMBER (Continued)

Catalog Number	Page #
HSM332T6PF24	F-6
HSM34T6PF8	F-6
HSM38T6PF12	F-6
HTP3	N-104
HYA_28	K-60
HYA_29	K-60
HYA_31	K-60
HYA_34	K-60
HYA_39	K-60
HYAO_28	K-60
HYAO_29	K-60
HYAO_31	K-60
HYAO_34	K-60
HYAO_39	K-60
HYFLUIDGAL	N-97
HYFLUIDQT	N-97
HYM_28	K-60
HYM_29	K-60
HYM_31	K-60
HYM_34	K-60
HYM_39	K-60
HYS_28	K-60
HYS_29	K-60
HYS_31	K-60
HYS_34	K-60
HYS_39	K-60
J1022NC1	N-54, N-68
J1022NC2	N-54, N-68
J1022NC3	N-54, N-68
J1022NC4	N-54, N-68
J1022NC5	N-54, N-68
J1207	K-66
J1592	K-66
J278	E-63
J279	E-63
J280	E-63
J295	E-63
J4CNC	N-68
J6CNC	N-68
J6NCP1CH	N-68
J8CNC	N-68
K10P4CG1	A-31
K11A30U	A-27
K11A34U-2	A-27
K11A36U-2	A-27
K11A39U-2	A-27
K12P4CG1	A-31
K12P6C3P1/0CAG1	A-30
K13P4CAG1	A-30
K14P4CG1	A-31
K14P6C5P1/0CAG1	A-30
K15P4CAG1	A-30
K16P6C5P1/0CAG1	A-30
K174P4CG1	A-31
K21A36U-2	A-27
K22A36U-2	A-27
K22A39U-2	A-27
K2A25U	A-25
K2A26U	A-25
K2A29U	A-25
K2A31U	A-25
K2A31U-2N	A-25
K2A36U	A-25
K2A36U-2N	A-25
K2A40U	A-25
K2A40U-2N	A-25
K2A44U	A-25
K2A44U-2N	A-25
K2C15	E-27
K2C15B1	E-27
K2C17	E-27
K2C17B1	E-27
K2C20	E-27
K2C20B1	E-27
K2C22	E-27
K2C22B1	E-27
K2C23	E-27
K2C23B1	E-27
K2C25	E-27
K2C25B1	E-27
K2C26	E-27
K2C26B1	E-27
K2C28	E-27
K2C28B1	E-27
K2C28G3	E-27
K2C31	E-27
K2C31B1	E-27
K2C34	E-27
K2C34B1	E-27
K2P4CAG1	A-30
K33B34-4N	K-73
K3A25U-2	A-26
K3A25U-4	A-26
K3A26U-2N	A-26
K3A27U-2N	A-26
K3A27U-4N	A-26
K3A29U-2N	A-26
K3A29U-4N	A-26
K3A2U-2	A-26
K3A2U-4	A-26
K3A31U-2N	A-26
K3A31U-4N	A-26
K3A36U-2N	A-26
K3A36U-4N	A-26
K3A40U-4N	A-26
K3P4CAG1	A-30
K4A29U-4N	A-27
K4A31U-4N	A-27
K5P6C2P1/0CAG1	A-30
K6A34U-6N	K-74
K6A34U-8	A-28
K6B2826-2N	K-73
K6B28-4N	K-73
K6P28	K-72
K6P28C	K-72
K6P34U	K-74
K6P34UC	K-74
K6P4CG1	A-31
K6PC34U	K-74
K8A34U-10	A-28
K8P4CG1	A-31
K9P4CAG1	A-30
KA25	A-12
KA25-2TC38	A-12
KA25U	A-23
KA25UAR	A-24
KA26U	A-23
KA26UAR	A-24
KA28	A-12
KA29U	A-23
KA2U	A-23
KA30226U	A-23
KA30U	A-23
KA30UAR	A-24
KA31U	A-23
KA31UAR	A-24
KA34	A-12
KA34U	A-23
KA36229U	A-23
KA36U	A-23
KA36U-2N	A-23
KA36UAR	A-24
KA39229U	A-23
KA40U	A-23
KA40U-2N	A-23
KA44U	A-23
KA44U-2N	A-23
KA4C	A-12
KA4UAR	A-24
KA6U	A-23
KA8C	A-12
KAG1MTGBRKT	A-30
KAU-KIT1	A-29
KAU-KIT2	A-29
KAU-KIT3	A-29
KAU-KIT4	A-29
KC15	E-27
KC15B1	E-27
KC17	E-27
KC17B1	E-27
KC20	E-27
KC20B1	E-27
KC22	E-27
KC22B1	E-27
KC23	E-27
KC23B1	E-27
KC25	E-27
KC25B1	E-27
KC26	E-27
KC26B1	E-27
KC28	E-27
KC28B1	E-27
KC28G3	E-27
KC31	E-27
KC31B1	E-27
KC34	E-27
KC34B1	E-27
KCKF23	E-28
KCKF25	E-28
KCKF28	E-28
KK3A36U-2N	A-26
KK3A36U-4N	A-26
KK3A40U-2N	A-26
KK3A40U-4N	A-26
KK3A44U-2N	A-26
KK3A44U-4N	A-26
KK4A36U-4N	A-27
KK4A40U-4N	A-27
KK6A31U-8	A-28
KK6A34U-8	A-28
KK6A44U-12	A-28
KK8A31U-10	A-28
KK8A34U-10	A-28
KK8A39U-10	A-28
KK8A39U-12	A-28
KK8A44U-14	A-28
KKA31U-2N	A-23
KLU125	A-11
KLU125TP	A-11
KLU175	A-11
KLU175TP	A-11
KLU225	A-11
KLU225TP	A-11
KLU25	A-11
KLU25TP	A-11
KLU300	A-11
KLU300TP	A-11
KLU35	A-11
KLU35TP	A-11
KLU400	A-11
KLU400TP	A-11
KLU70	A-11
KLU70TP	A-11
KPA25	A-10
KPA28	A-10
KPA34	A-10
KPA4C	A-10
KPA4CUP	A-10
KPA8C	A-10
KPA8CUP	A-10
KPB4CG1	E-30
K-PC28	K-72
KPU29A26AC	A-38
KPU29A29AC	A-38
KPU34A26AC	A-38
KPU34A34AC	A-38
KPU39A26AC	A-38
KPU39A39AC	A-38
KS15	A-3, E-29, H-4
KS17	A-3, E-29, H-4
KS17-3	A-3, H-4
KS20	A-3, E-29, H-4
KS20-3	A-3, H-4
KS22	A-3, E-29, H-4
KS22-3	A-3, H-4
KS23	A-3, E-29, H-4
KS25	A-3, E-29, H-4
KS26	A-3, E-29, H-4
KS27	A-3, E-29, H-4
KS29	A-3, E-29, H-4
KS31	A-3, E-29, H-4
KS34	A-3, E-29, H-4
KS39	A-3, H-4
KS44	A-3, H-4
KS90	A-3, H-4
KSA1/0	A-5
KSA2	A-5
KSA2/0	A-5
KSA350	A-5
KSA4	A-5
KSA4/0	A-5
KSA500	A-5
KSA6	A-5
KSU17	A-4, H-5
KSU20	A-4, H-5
KSU22	A-4, H-5
KSU23	A-4, H-5
KSU25	A-4, H-5
KSU26	A-4, H-5
KSU27	A-4, H-5

ALPHA-NUMERIC INDEX BY CATALOG NUMBER (Continued)

Catalog Number	Page #
KSU29	A-4, H-5
KSU31	A-4, H-5
KSU34	A-4, H-5
KUADP	N-15
KVS26	A-6, H-6
KVS26A	A-7, H-8
KVS28	A-6, H-6
KVS28A	A-7, H-8
KVS31	A-6, H-6
KVS31A	A-7, H-8
KVS34	A-6, H-6
KVS34A	A-7, H-8
KVS40	A-6, H-6
KVS40A	A-7, H-8
KVS44	A-6, H-6
KVS44A	A-7, H-8
KVSU26	A-6, H-7
KVSU28	A-6, H-7
KVSU31	A-6, H-7
KVSU34	A-6, H-7
KVSU40	A-6, H-7
KVSU44	A-6, H-7
KVSW26	A-7, H-6
KVSW28	A-7, H-6
KVSW31	A-7, H-6
KVSW34	A-7, H-6
KVSW40	A-7, H-6
KVSW44	A-7, H-6
L717W	N-33
L719W	N-33
L720W	N-33
L722W	N-33
L724W	N-33
L725W	N-33
L727W	N-33
L728W	N-33
L729W	N-33
L735W	N-33
LB13A	L-34
LB14A	L-34
LB15A	L-34
LB16A	L-34
LB17A	L-34
LB18A	L-34
LB19A	L-34
LB20A	L-34
LB21A	L-34
LB22A	L-34
LB23A	L-34
LB24A	L-34
LB53A	L-34
LB54A	L-34
LB55A	L-34
LB56A	L-34
LB57A	L-34
LB58A	L-34
LB59A	L-34
LB83A	L-34
LB86A	L-34
LB88A	L-34
LB90A	L-34
LB91A	L-34
LB92A	L-34
LB94A	L-34
LB96A	L-34
LF1006	K-53
LF1010	K-51, K-53
LF1014	K-51, K-52, K-53
LF1025	K-51, K-52, K-53
LF2019	K-51, K-52, K-53
LF2027	K-51, K-52, K-53
LF2038	K-51, K-52, K-53
LF2065	K-51, K-52, K-53
LF2108	K-53
LH283	L-18
LH343	L-18
LH453	L-18
LHR293	L-18
LHR443	L-18
LHR445	L-18
LPC12S	N-109
LPC38S	N-109
LPHT3CHISEL11418	N-109
LPHTADPMM71612	N-99, N-109
LPHTADPMMOP66	N-98, N-109
LPHTADPSMFOP66	N-102
LPHTADPSMOP66	N-99
LPHTASPHALTCUT118	N-109
LPHTBIT111612HC	N-101
LPHTBIT111612SC	N-101
LPHTBIT111618	N-101
LPHTBIT111618D	N-101, N-109
LPHTBIT111618HC	N-101
LPHTBIT111618R	N-101
LPHTBIT111624D	N-101, N-109
LPHTBIT111624R	N-101
LPHTBIT11812HC	N-101
LPHTBIT11824D	N-101
LPHTBIT11824R	N-101
LPHTBIT1218	N-101
LPHTBIT131612HC	N-101
LPHTBIT131612SC	N-101
LPHTBIT131618	N-101
LPHTBIT131618D	N-101, N-109
LPHTBIT131618HC	N-101
LPHTBIT131618R	N-101
LPHTBIT131618SC	N-101
LPHTBIT131624	N-101
LPHTBIT131624D	N-101, N-109
LPHTBIT131624R	N-101
LPHTBIT151618	N-101
LPHTBIT151618D	N-101, N-109
LPHTBIT151618R	N-101
LPHTBIT151624D	N-101, N-109
LPHTBIT151624R	N-101
LPHTBIT3418D	N-101
LPHTBIT3418R	N-101
LPHTBIT3424D	N-101
LPHTBIT5818D	N-101
LPHTBIT5818R	N-101
LPHTBIT5824D	N-101
LPHTBIT7818D	N-101
LPHTBIT91612HC	N-101
LPHTBIT91618R	N-101
LPHTBIT9168R	N-101
LPHTCLAYSPADE118	N-109
LPHTDRIPBODY66	N-109
LPHTDRIPBODY88	N-109
LPHTDRIPNOSE66	N-109
LPHTDRIPNOSE88	N-109
LPHTGRDVR11458	N-109
LPHTGRDVR11858	N-109
LPHTHOSNCR666610	N-102, N-109
LPHTHOSNCR666610OP	N-102, N-109
LPHTHOSNCR66668	N-98, N-109
LPHTHOSNCR66668OP	N-102, N-109
LPHTHTMABODY66	N-98, N-102
LPHTHTMADUSTCAPF	N-109
LPHTHTMADUSTCAPM	N-109
LPHTHTMANOSE66	N-98, N-102
LPHTMOILPT118	N-109
LPHTMOILPT11814	N-109
LPHTNARCHISEL11814	N-109
LPHTSOC121	N-109
LPHTSOC121/118	N-109
LPHTSOC121116	N-109
LPHTSOC12112	N-109
LPHTSOC12114	N-109
LPHTSOC12118	N-109
LPHTSOC121188PT	N-109
LPHTSOC1212	N-109
LPHTSOC12128PT	N-109
LPHTSOC121316	N-109
LPHTSOC121316/1516	N-109
LPHTSOC1213168PT	N-109
LPHTSOC12138	N-109
LPHTSOC1215168PT	N-109
LPHTSOC121716	N-109
LPHTSOC1217168PT	N-109
LPHTSOC1218PT	N-109
LPHTSOC1234	N-109
LPHTSOC12348PT	N-109
LPHTSOC1258	N-109
LPHTSOC12588PT	N-109
LPHTSOC1278	N-109
LPHTSOC12788PT	N-109
LPHTSOC12916	N-109
LPHY750CXT	N-102
LPHY750XT	N-102
LPWHPKITD	N-105
LSC1/0	H-19
LSC1/0-1	H-19
LSC556	H-19
LSC556-1	H-19
LYBASE	K-54
LYM1CC	K-52
LYM25C	K-52
LYM26C	K-52
LYM27C	K-52
LYM28C	K-52
LYM29C	K-52
LYM2CC	K-52
LYM30C	K-52
LYM31C	K-52
LYM32C	K-52
LYM34C	K-52
LYM34P3	K-56
LYS1CC	K-51
LYS1CP5	K-55
LYS25C	K-51
LYS25P5	K-55
LYS26C	K-51
LYS26P5	K-55
LYS27C	K-51
LYS27P5	K-55
LYS28C	K-51
LYS28P5	K-55
LYS29C	K-51
LYS29P5	K-55
LYS2CC	K-51
LYS2CP5	K-55
LYS30C	K-51
LYS30P5	K-55
LYS31C	K-51
LYS31P5	K-55
LYS32C	K-51
LYS32P5	K-55
LYS32P6	K-56
LYS34C	K-51
LYS34P2	K-54
LYS34P5	K-55
LYS48P6	K-56
LYS4CC	K-51
LYS4CP5	K-55
LYS64P6	K-56
LYS6CP5	K-55
LYS80P6	K-56
M20	H-69
M30	H-69
M40	H-69
M50	H-69
M60	H-69
M70	H-69
M80	H-69
M8ND	N-57
M90	H-69
MCC1000	N-85
MCC1000BLADESET	N-85
MCC600	N-85
MCC600BLADESET	N-85
MD6	N-62
MD6-12	N-62
MD6-14	N-62
MD6-37	N-62
MD6-38	N-62
MD6-4	N-62
MD6-6	N-62
MD6-6HS60	N-65
MD6-6HS72	N-65
MD6-8	N-62
MD6-8AH48	N-65
MD6-8HS60	N-65
MD6-8HS72	N-65
MD6-AH48	N-65
MD6-CP1	N-66
MD6HS60	N-65
MD6HS72	N-65
MD6-K	N-62
MD7	N-63
MD7-34	N-64
MD7-34-KIT1	N-64
MD7-34R	N-64
MD7-34R-C	N-64
MD7-34R-KIT1	N-64
MD7-6	N-63
MD7-8	N-63
MINBAG	N-82
MK7	G-26
MK9	G-26
MK9SST	G-26

ALPHA-NUMERIC INDEX BY CATALOG NUMBER (Continued)

Catalog Number	Page #
MR15	N-52
MR18	N-52
MR20	N-52
MR4C	N-53
MR8-1A	N-50
MR8-33S-1	N-50
MR8-33T-1	N-50
MR8-9Q	N-50
MR8-G96	N-50
MR8-G98	N-50
MRC840	N-58
MRC840AL	N-58
MRE10-22B	N-51
MRE10-22NV	N-51
MTB	N-122, N-123
MTX	N-122, N-123
MY28	N-59
MY28-4	N-59
MY28-6	N-59
MY29-11	N-59
MY29-11C	N-59
MY29-3	N-59
MY29-3C	N-59
MY29-3CF	N-59
MY29UNIVERSALKIT	N-59
N2AH29-2N	L-7
N2AH29-34N	L-7
N2AH34-2N	L-7
N2AH34-34N	L-7
N2AH34-44N	L-7
N2AH40-34N	L-7
N2AH44-34N	L-7
N2AH44-44N	L-7
N2AH44-44NHQ	L-7
N2AH46-44N	L-7
N2AH48-44N	L-7
NA122N	L-5
NA132N	L-5
NA142N	L-5
NA144N	L-5
NA152N	L-5
NA154N	L-5
NA15A-2N	L-28
NA15A-4N	L-28
NA162N	L-5
NA164N	L-5
NA16A-2N	L-28
NA172N	L-5
NA1744NHQ	L-5
NA174N	L-5
NA17A-2N	L-28
NA17A-4N	L-28
NA182N	L-5
NA184N	L-5
NA18A-2N	L-28
NA18A-4N	L-28
NA1944N	L-5
NA1944NHQ	L-5
NA194N	L-5
NA194N90CG2	L-5
NA19A-4N	L-28
NA204N	L-5
NA20A-4N	L-28
NA214N	L-5
NA224N	L-5
NA22A-4N	L-28
NAH29-2N	L-6
NAH29-34N	L-6
NAH34-2N	L-6
NAH34-34N	L-6
NAH40-2N	L-6
NAH40-34N	L-6
NAH404-4N	L-6
NAH44-2N	L-6
NAH44-34N	L-6
NAH44-44N	L-6
NAH46-2N	L-6
NAH46-34N	L-6
NAH46-44N	L-6
NAH48-2N	L-6
NAH48-34N	L-6
NAH48-44N	L-6
NAH48-62N	L-6
NAH486-34N	L-6
NAR25A2N	L-30
NAR29A2N	L-30
NAR29A4N	L-30
NAR32A2N	L-30
NAR32A4N	L-30
NAR36A2N	L-30
NAR36A4N	L-30
NAR42A2N	L-30
NAR42A4N	L-30
NAR45A2N	L-30
NAR45A4N	L-30
NAR46A2N	L-30
NAR46A4N	L-30
NAR48A2N	L-30
NAR48A4N	L-30
NAS29-2N	L-4
NAS29-34N	L-4
NAS29-N	L-4
NAS34-2N	L-4
NAS34-34N	L-4
NAS34-N	L-4
NAS40-2N	L-4
NAS40-34N	L-4
NAS40-44N	L-4
NBC14A2N	L-31
NBC15A-2N	L-31
NBC15A34N	L-31
NBC16A2N	L-31
NBC16A34N	L-31
NBC16A44N	L-31
NBC17A2N	L-31
NBC17A34N	L-31
NBC17A44N	L-31
NBC18A2N	L-31
NBC18A34N	L-31
NBC18A-44N	L-31
NBC19A34N	L-31
NBC19A44N	L-31
NBC20A2N	L-31
NBC20A34N	L-31
NBC20A-44N	L-31
NBC21A44N	L-31
NBC22A2N	L-31
NBC22A34N	L-31
NBC22A44N	L-31
NBC24A2N	L-31
NBC24A34N	L-31
NBC24A44N	L-31
NBC86A44N	L-31
NDR6328T13	L-19
NDR6334T13	L-19
NDR6428T16	L-19
NDR6434T12	L-19
NDR6434T16	L-19
NDR6444T16	L-19
NDR64534T14	L-19
NDR6528T14	L-19
NDR6534T12	L-19
NDR6534T14	L-19
NDR6544T14	L-19
NDR65528T12	L-19
NDR65534T12	L-19
NDR65544T12	L-19
NDR6748T12	L-19
NDR67544T12	L-19
NDR67548T12	L-19
NDR6844T12	L-19
NDR6848T12	L-19
NDR68544T12	L-19
NHNT1429	L-13
NHNT1434	L-13
NHNT1529	L-13
NHNT1534	L-13
NHNT1540	L-13
NHNT1629	L-13
NHNT1634	L-13
NHNT1640	L-13
NHNT1644	L-13
NHNT1729	L-13
NHNT1734	L-13
NHNT1740	L-13
NHNT1744	L-13
NHNT1829	L-13
NHNT1834	L-13
NHNT1840	L-13
NHNT1844	L-13
NHNT1846	L-13
NHNT1929	L-13
NHNT1934	L-13
NHNT1940	L-13
NHNT1944	L-13
NHNT1946	L-13
NHNT2040	L-13
NHNT2044	L-13
NHNT2229	L-13
NNT15A15A	L-25
NNT16A16A	L-25
NNT17A17A	L-25
NNT18A18A	L-25
NNT19A19A	L-25
NNT20A20A	L-25
NNT21A20A	L-25
NNT22A22A	L-25
NNTR14A29A	L-27
NNTR15A36A	L-27
NNTR15A42A	L-27
NNTR16A29A	L-27
NNTR16A32A	L-27
NNTR16A42A	L-27
NNTR17A29A	L-27
NNTR18A29A	L-27
NNTR19A42A	L-27
NNTR20A32A	L-27
NNTR22A46A	L-27
NNTR29A29A	L-26
NNTR32A25A	L-26
NNTR32A32A	L-26
NNTR36A29A	L-26
NNTR36A36A	L-26
NNTR42A32A	L-26
NNTR42A36A	L-26
NNTR42A42A	L-26
NNTR45A45A	L-26
NNTR46A42A	L-26
NNTR46A46A	L-26
NNTR48A48A	L-26
NS1212	L-15
NS1313	L-15
NS14148HC	L-15
NS1414HC	L-15
NS14A14A	L-28
NS1515	L-15
NS1515HC	L-15
NS1515HCHQ	L-15
NS15A15A	L-28
NS1616HC	L-15
NS16A16A	L-28
NS1717	L-15
NS1717HC	L-15
NS1717HCHQ	L-15
NS17A17A	L-28
NS1818	L-15
NS1818CG2	L-15
NS1818HC	L-15
NS18A18A	L-28
NS1919	L-15
NS1919HC	L-15
NS1919HCHQ	L-15
NS19A19A	L-28
NS2020	L-15
NS2020HC	L-15
NS20A20A	L-28
NS2121	L-15
NS2121HC	L-15
NS21A21A	L-28
NS2222	L-15
NS2222HC	L-15
NS22A22A	L-28
NS23A23A	L-28
NS24A24A	L-28
NS86A86A	L-28
NSNT1329	L-12
NSNT1429	L-12
NSNT1434	L-12
NSNT1529	L-12
NSNT1629	L-12
NSNT2929	L-12
NSNT3429	L-12
NSNT3434	L-12
NT1313	L-11
NT1413	L-11
NT1414	L-11
NT1514	L-11
NT1515	L-11
NT1614	L-11
NT1615	L-11

ALPHA-NUMERIC INDEX BY CATALOG NUMBER (Continued)

Catalog Number	Page #
NT1616	L-11
NT1714	L-11
NT1715	L-11
NT1717	L-11
NT1816	L-11
NT1817	L-11
NT1818	L-11
NT1919	L-11
NT2020	L-11
NT2121	L-11
NT2222	L-11
NYFT3434CCP	K-50
NYFT3434CCR	K-50
NYT2825	K-58
NYT2826	K-58
NYT2828	C-138, K-58
NYT282C	K-58
NYT2925	C-138, K-58
NYT2926	K-58
NYT2928	K-58
NYT2929	C-138, K-58
NYT292C	K-58
NYT3125	K-58
NYT3126	K-58
NYT3128	K-58
NYT3129	K-58
NYT3131	K-58
NYT3426	C-138, K-58
NYT3428	C-138, K-58
NYT3429	C-138, K-58
NYT3431	K-58
NYT3434	C-138, K-58
NYT3926	K-58
NYT3928	K-58
NYT3929	C-138, K-58
NYT3931	K-58
NYT3934	C-138, K-58
NYT3939	K-58
NYT4426	K-58
NYT4428	K-58
NYT4429	C-138, K-58
NYT4431	C-138, K-58
NYT4434	C-138, K-58
NYT4439	K-58
NYT4444	C-138, K-58
NYT4628	K-58
NYT4629	K-58
NYT4631	K-58
NYT4634	K-58
NYT4639	K-58
NYT4644	K-58
NYT4646	C-138, K-58
OH25	N-60
OUR840	N-61
OUR840-WC	N-61
P15K	N-9, N-12, N-35
P8A	F-4
PAT46-18V	N-10
PAT46C-18V	N-10
PAT46C-LI	N-9
PAT46-LI	N-9
PAT46LW-18V	N-11, N-12
PAT46LW-LI	N-11, N-12
PAT4PC834-18V	N-20
PAT4PC834-LI	N-19
PAT600-18V	N-22
PAT600C-18V	N-22
PAT600C-LI	N-21
PAT600-LI	N-21
PAT644-LI	N-16
PAT750CK-18V	N-15
PAT750C-LI	N-13
PAT750CXT-18V	N-14
PAT750K-18V	N-15
PAT750K-LI	N-15
PAT750-LI	N-13
PAT750XT-18V	N-14
PAT81KFT-18V	N-18
PAT81KFT-LI	N-17
PATCHGLIDC	N-78, N-79
PATCHGR18V	N-10, N-20, N-79
PATCHGR250V	N-10, N-22, N-75
PATCHGRLI	N-11, N-78, N-79
PATCHGR-LI	N-9, N-17, N-74
PATCHGR-LIDC	N-15, N-21, N-74
PATCUT129ACSR-18V	N-73
PATCUT129-LI	N-72
PATCUT2156-18V	N-77
PATCUT2156-18V250V	N-77
PATCUT2156-18VDC	N-77
PATCUT2156-LI	N-76
PATCUT2156-LIDC	N-76
PATCUT2156-LILCB	N-76
PATCUT245CUAL-18V	N-75
PATCUT245-LI	N-74
PATHCC1018V	N-71
PATHCC10ACSR18V	N-71
PATHCC10C18V	N-71
PATHCC10CACSR18V	N-71
PATHCC10CCUAL18V	N-71
PATHCC10CGUY18V	N-71
PATHCC10CSOL18V	N-71
PATHCC10CUAL18V	N-71
PATHCC10GUY18V	N-71
PATHCC10SOL18V	N-71
PATJAWSCUT	N-23, N-78, N-79
PATJAWSMD6	N-23, N-78, N-79
PATJAWSMD6-6	N-23, N-78, N-79
PATJAWSMD6-8	N-24, N-78, N-79
PATJAWSMD6K	N-23, N-78, N-79
PATJMD6-K-14V	N-24
PATJMD6-K-LI	N-23
PATMD6-14V	N-24
PATMD6-6-14V	N-24
PATMD66JC	N-23, N-78, N-79
PATMD6-6-LI	N-23
PATMD66LICUTKIT1	N-23, N-78
PATMD66LIWCJ	N-23, N-78
PATMD6-8-14V	N-24
PATMD6-8-LI	N-23
PATMD68LICUTKIT1	N-23, N-78
PATMD68LIWCJ	N-23, N-78
PATMD6JC	N-23, N-24, N-79
PATMD6KJC	N-23, N-78, N-79
PATMD6-LI	N-23
PATMD6LICUTKIT1	N-23, N-78
PATMD6LIWCJ	N-23, N-78
PATMDCUT14V	N-78
PATMDCUT14V250V	N-78
PATMDCUT14VDC	N-78
PATMDCUT48LLI	N-79
PATMDCUT48LNMH	N-79
PATMDCUT60LLI	N-79
PATMDCUT60LNMH	N-79
PATMDCUT72LLI	N-79
PATMDCUT72LNMH	N-79
PATMDCUTACSRKIT	N-78, N-79
PATMDCUTLI	N-78
PATMDCUTLIDC	N-78
PATMDCUTSOMI	N-78, N-79
PENA1/2	F-4
PENA13-4	F-4
PENA13-55GAL	F-4
PENA13-5GAL	F-4
PENA13-8	F-4
PENA13CARTRIDGE	F-4
PENA13-GAL	F-4
PENA13-QT	F-4
PENA-4	F-4
PENA-55GAL	F-4
PENA-5GAL	F-4
PENACARTRIDGE	F-4
PENA-GAL	F-4
PENA-QT	F-4
PENE-4	F-4
PENE-55GAL	F-4
PENE-5GAL	F-4
PENE-8	F-4
PENE-GAL	F-4
PENE-QT	F-4
PENHT1LB	F-4
PENHT-4	F-4
PENHT-8	F-4
PENHTGAL	F-4
PG1025X03D	B-71
PG121-1	N-53
PG125-1	N-53
PG133-1	N-53
PG1425X03D	B-71
PG1825X03D	B-71
PG-406-1	N-51
PG-407-1	N-51
PG-408-1	N-51
PGHS1425X03D	B-71
PGHS1825X03D	B-71
PGN1025X03B	B-73
PGN1025X03D	B-73
PGN1425X03B	B-73
PGN1425X03D	B-73
PGN1825X03B	B-73
PGN1825X03D	B-73
PGP1025X03B	B-72
PGP1025X03D	B-72
PGP1425X03B	B-72
PGP1425X03D	B-72
PGP1825X03B	B-72
PGP1825X03D	B-72
PT10024162	N-81
PT10037384	N-72, N-74, N-83
PT10037388	N-72, N-73, N-83
PT10038657	N-75, N-84
PT10040663	N-75, N-84
PT10043890	N-83
PT10044980	N-75
PT10054094	N-84
PT10074020	N-78, N-79
PT10128	N-35, N-82, N-97
PT11018	N-97
PT208620	N-13, N-20, N-76
PT29074-1	N-96, N-97
PT29091	N-97
PT29214-1	N-97
PT29279-2	N-27, N-37
PT29291	N-7, N-25, N-97
PT29360	N-27, N-37, N-97
PT2972	N-27
PT29900-10	N-96
PT29900-15	N-96
PT29900-25	N-96
PT29901-10	N-96
PT29901-15	N-96
PT29901-25	N-96
PT29902-10	N-96
PT29902-15	N-96
PT29902-25	N-96
PT4583	N-60, N-61
PT4925	N-66
PT4931-1	N-66
PT4952-1	N-66
PT6515	N-36
PT6545	N-36, N-97
PT6733	N-27, N-66
PT6744	N-66
PT76	N-96
PT8504	N-60
PT91	N-96
PT93	N-97
PT94	N-97
PTV10	B-84
PTV14	B-84
PTV18	B-84
PU998	N-7
PUADP-1	N-9, N-11, N-35
Q10F11X02D	B-61
Q10F18X02D	B-61
Q10F25X03B	B-61
Q10F25X03D	B-61
Q10M25X03D	B-60
Q14F11X02B	B-61
Q14F11X02D	B-61
Q14F18X02B	B-61
Q14F18X02D	B-61
Q14F25X03B	B-61
Q14F25X03D	B-61
Q14M18X02B	B-60
Q14M18X02D	B-60
Q14M25X03B	B-60
Q14M25X03D	B-60
Q18F11X02D	B-61
Q18F18X02B	B-61
Q18F18X02D	B-61
Q18F25X03B	B-61
Q18F25X03D	B-61
Q18M11X02D	B-60
Q18M18X02B	B-60
Q18M18X02D	B-60
Q18M25X03B	B-60
Q18M25X03D	B-60
Q2A1C-2	A-16
Q2A26-2N	A-16

ALPHA-NUMERIC INDEX BY CATALOG NUMBER (Continued)

Catalog Number	Page #
Q2A28-2N	A-16
Q2A28-4N	A-16
Q2A31-2N	A-16
Q2A31-4N	A-16
Q2A34-2N	A-16
Q2A34-4N	A-16
Q2A40-2N	A-16
Q2A40-4N	A-16
Q2A44-4N	A-16
Q2A46-4N	A-16
Q2B28-2N	A-17
Q2B31-2N	A-17
Q2B40-4N	A-17
Q3A28-2N	A-16
Q3A28-4N	A-16
Q3A31-2N	A-16
Q3A31-4N	A-16
Q3A34-2N	A-16
Q3A34-4N	A-16
Q3A40-4N	A-16
Q3A44-4N	A-16
Q3A46-4N	A-16
QA1C-2B	A-15
QA1C-B	A-15
QA26-2B	A-15
QA26-B	A-15
QA28-2B	A-15
QA28-2N	A-15
QA28-B	A-15
QA31-2B	A-15
QA31-2N	A-15
QA31-B	A-15
QA34-2B	A-15
QA34-2N	A-15
QA34-4B	A-15
QA34-B	A-15
QA40-2N	A-15
QA40-B	A-15
QA44-2N	A-15
QA44-4N	A-15
QA44-B	A-15
QA46-2N	A-15
QA46-B	A-15
QA4C-2B	A-15
QA4C-B	A-15
QA8C-2B	A-15
QA8C-B	A-15
QB1C	A-17
QB26	A-17
QB28	A-17
QB31-2N	A-17
QB4C	A-17
QB8C	A-17
QDA1C	A-18
QDA26	A-18
QDA28	A-18
QDA31	A-18
QDA34	A-18
QDA40	A-18
QDA4C	A-18
QDA8C	A-18
QGFL1CB1	A-37, E-64, L-21
QGFL1CB1T6	A-37, E-64, L-21
QGFL26B1	A-37, E-64, L-21
QGFL26B1T6	A-37, E-64, L-21
QGFL26B2	A-37, E-64, L-21
QGFL26B2T6	A-37, E-64, L-21
QGFL29B1	A-37, E-64, L-21
QGFL29B1T6	A-37, E-64, L-21
QGFL31B1	A-37, E-64, L-21
QGFL31B1T6	A-37, E-64, L-21
QGFL34B1	A-37, E-64, L-21
QGFL34B1T6	A-37, E-64, L-21
QGFL39B1	A-37, E-64, L-21
QGFL39B1T6	A-37, E-64, L-21
QGFL44B1	A-37, E-64, L-21
QGFL44B1T6	A-37, E-64, L-21
QGFL46B1	A-37, E-64, L-21
QGFL46B1T6	A-37, E-64, L-21
QGFL48B1	A-37, E-64, L-21
QIKLITE	E-71
QIKLITEKIT	E-71
QIKSTIK	E-71
QN10F18X02B	B-66
QN10F18X02D	B-66
QN10F25X03B	B-66
QN10F25X03D	B-66
QN10M25X03D	B-65
QN14F11X02B	B-66
QN14F11X02D	B-66
QN14F18X02B	B-66
QN14F18X02D	B-66
QN14F25X03B	B-66
QN14F25X03D	B-66
QN14M18X02B	B-65
QN14M18X02D	B-65
QN14M25X03B	B-65
QN14M25X03D	B-65
QN18F11X02B	B-66
QN18F11X02D	B-66
QN18F18X02B	B-66
QN18F18X02D	B-66
QN18F25X03B	B-66
QN18F25X03D	B-66
QN18M18X02B	B-65
QN18M18X02D	B-65
QN18M25X03B	B-65
QN18M25X03D	B-65
QP10F18X02B	B-63
QP10F18X02D	B-63
QP10F25X03B	B-63
QP10F25X03D	B-63
QP10F38X05D	B-63
QP10M25X03D	B-62
QP14F11X02D	B-63
QP14F18X02B	B-63
QP14F18X02D	B-63
QP14F25X03B	B-63
QP14F25X03D	B-63
QP14M11X02D	B-62
QP14M18X02B	B-62
QP14M18X02D	B-62
QP14M25X03B	B-62
QP14M25X03D	B-62
QP18F11X02D	B-63
QP18F18X02B	B-63
QP18F18X02D	B-63
QP18F25X03B	B-63
QP18F25X03D	B-63
QP18M11X02D	B-62
QP18M18X02B	B-62
QP18M18X02D	B-62
QP18M25X03B	B-62
QP18M25X03D	B-62
QPX2828	A-8, H-14
QPX2828-Y	A-9
QPX282C	A-8, H-14
QPX282C-Y	A-9
QPX2C2C	A-8, H-14
QPX2C2C-Y	A-9
QPX3428	A-8, H-14
QPX3428-Y	A-9
QPX342C	A-8, H-14
QPX342C-Y	A-9
QPX3434	A-8, H-14
QPX3434-Y	A-9
QPX4428	A-8, H-14
QPX442C	A-8, H-14
QPX4434	A-8, H-14
QPX4444	A-8, H-14
QPX4444-Y	A-9
QQA1C	A-15
QQA1C-2	A-15
QQA26	A-15
QQA26-2	A-15
QQA28	A-15
QQA28-2N	A-15
QQA31	A-15
QQA31-2N	A-15
QQA34	A-15
QQA34-2N	A-15
QQA40-2N	A-15
QQA40-4N	A-15
QQA44-2N	A-15
QQA44-4N	A-15
QQA4C	A-15
QQA4C-2	A-15
QQA8C	A-15
QQA8C-2	A-15
QR1C	A-18
QR26	A-18
QR28	A-18
QR31	A-18
QR34	A-18
QR40	A-18
QR4C	A-18
R17A	N-122, N-124
R17C	N-122, N-124
R22B	N-122, N-124
R24F	N-122, N-124
R25D	N-122, N-124
RA6UCR-SL	K-62
RA6UC-SL	K-62
RCC1000	N-86
RCC336	N-86
RCC556	N-86
RCC600E	N-86
RCC750HD	N-86
RCC954ACSR1K	N-86
RDM4-28	K-62
RDM5-28T	K-62
RDM6-28	K-62
RDM7-28T	K-62
RDM8-28	K-62
RDMD-28CR	K-61
RDMD4-2858D	K-61
RDMD4-28G3	K-61
RGC39G1	E-63
RGC44G1	E-63
RHCC10	N-82
RHCC10ACSR	N-82
RHCC10C	N-82
RHCC10CACSR	N-82
RHCC10CCUAL	N-82
RHCC10CGUY	N-82
RHCC10CSOL	N-82
RHCC10CUAL	N-82
RHCC10GUY	N-82
RHCC10SOL	N-82
RHCC129ACSR	N-83
RHCC245CUAL	N-84
RHCCHSA	N-83
RK141-2	B-92
RK141ABOX100	B-92
RK142-2	B-92
RK142ABOX100	B-92
RK149-2	A-40
RK150-2	A-40
RK151-2	A-40
RK152-2	A-40
RK153-2	A-40
RK194-2	N-67
RK225-2	A-40
RK226-2	A-40
RK227-2	A-40
RP50RP02	N-80
RP50RP03	N-80
RWRC516	N-87
RWRC916	N-87
RYA25UC	K-63
RYA25UCR	K-63
RYA26UC	K-63
RYA26UCR	K-63
RYA27UC	K-63
RYA27UCR	K-63
RYA28UC	K-63
RYA28UCR	K-63
RYA29UC	K-63
RYA29UCR	K-63
RYA2UC	K-63
RYA2UCR	K-63
RYA2WAC	K-63
RYA2WACR	K-63
RYA31	K-63
RYA31AC	K-63
RYA31ACR	K-63
RYA31C-2	K-62
RYA31CR-2	K-62
RYA34C-2	K-62
RYA34CR-2	K-62
RYA4UC	K-63
RYA4UCR	K-63
RYA75AC	K-63
RYA75ACR	K-63
RYAC25	K-63
RYAC31	K-66
RYAC31-1	K-66
S2D451R-SG1	I-62
S2GBP41A	M-33
S2GBP41A12	M-33

ALPHA-NUMERIC INDEX BY CATALOG NUMBER (Continued)

Catalog Number	Page #
S2GBP41A12B2	M-35
S2GBP41AB2	M-35
S2GBP445A	M-33
S2GBP445A12	M-33
S2GBP445A12B2	M-35
S2GBP445AB2	M-35
S2GBP44A	M-33
S2GBP44A12	M-33
S2GBP44A12B2	M-35
S2GBP44AB2	M-35
S2GBP451ASG1HT	I-63
S2GBP451ASG4	I-63
S2GBP45A	M-33
S2GBP45A12	M-33
S2GBP45A12B2	M-35
S2GBP45AB2	M-35
S2GBP463ASG1HT	I-63
S2GBP463ASG6	I-63
S2GBP46A	M-34
S2GBP46A12	M-34
S2GBP46A12B2	M-36
S2GBP46AB2	M-36
S2GBP47ASG1	I-63
S2GBP47ASG2HT	I-63
S2GBP483A	M-34
S2GBP483A12	M-34
S2GBP483A12B2	M-36
S2GBP483AB2	M-36
S2GBP486A	M-34
S2GBP486A12	M-34
S2GBP486A12B2	M-36
S2GBP486AB2	M-36
S2GBP48A	M-34
S2GBP48A12	M-34
S2GBP48A12B2	M-36
S2GBP48AB2	M-36
S2GBP48ASG1HT	I-63
S2GBP48ASG2	I-63
S2GBP51ASG1	I-63
S2GBP51ASG2HT	I-63
S2GBP52ASG1	I-63
S2GBP52ASG2HT	I-63
S2GBPA41A	M-33
S2GBPA41A12	M-33
S2GBPA41A12B2	M-35
S2GBPA41AB2	M-35
S2GBPA445A	M-33
S2GBPA445A12	M-33
S2GBPA445A12B2	M-35
S2GBPA445AB2	M-35
S2GBPA44A	M-33
S2GBPA44A12	M-33
S2GBPA44A12B2	M-35
S2GBPA44AB2	M-35
S2GBPA45A	M-33
S2GBPA45A12	M-33
S2GBPA45A12B2	M-35
S2GBPA45AB2	M-35
S2GBPA46A	M-34
S2GBPA46A12	M-34
S2GBPA46A12B2	M-36
S2GBPA46AB2	M-36
S2GBPA483A	M-34
S2GBPA483A12	M-34
S2GBPA483A12B2	M-36
S2GBPA483AB2	M-36
S2GBPA486A	M-34
S2GBPA486A12	M-34
S2GBPA486A12B2	M-36
S2GBPA486AB2	M-36
S2GBPA48A	M-34
S2GBPA48A12	M-34
S2GBPA48A12B2	M-36
S2GBPA48AB2	M-36
S3D451R-SG1	I-62
S3D55R-SG1	I-62
S3GBP41A	M-37
S3GBP445A	M-37
S3GBP44A	M-37
S3GBP45A	M-37
S3GBP46A	M-37
S3GBP483A	M-37
S3GBP486A	M-37
S3GBP48A	M-37
S4D48R-SG1	I-62
S6D441R-SG1	I-62
SC2	A-3, H-5
SC2/0	A-3, H-5
SC4	A-3, H-5
SCB19A	M-29
SCB20A	M-29
SCB21A	M-29
SCB22A	M-29
SCB24A	M-29
SCB86A	M-29
SD10NCP1CH	N-68
SF2A44NL12EX	M-38
SF2A44NL18EX	M-38
SH2GBP41A5	M-33
SH2GBP41A512	M-33
SH2GBP41A512B2	M-35
SH2GBP41A5B2	M-35
SH2GBP445A5	M-33
SH2GBP445A512	M-33
SH2GBP445A512B2	M-35
SH2GBP445A5B2	M-35
SH2GBP44A5	M-33
SH2GBP44A512	M-33
SH2GBP44A512B2	M-35
SH2GBP44A5B2	M-35
SH2GBP45A5	M-33
SH2GBP45A512	M-33
SH2GBP45A512B2	M-35
SH2GBP45A5B2	M-35
SH2GBP46A5	M-34
SH2GBP46A512	M-34
SH2GBP46A512B2	M-36
SH2GBP46A5B2	M-36
SH2GBP483A5	M-34
SH2GBP483A512	M-34
SH2GBP483A512B2	M-36
SH2GBP483A5B2	M-36
SH2GBP486A5	M-34
SH2GBP486A512	M-34
SH2GBP486A512B2	M-36
SH2GBP486A5B2	M-36
SH2GBP48A5	M-34
SH2GBP48A512	M-34
SH2GBP48A512B2	M-36
SH2GBP48A5B2	M-36
SN10	B-48
SN10B	B-49
SN14	B-48
SN14B	B-49
SN18	B-48
SN18B	B-49
SP10	B-47
SP14	B-47
SP16	B-47
STKIT08	B-90
STKIT15	B-90
STS33A-4N	M-32
STS43A-4N	M-32
STS44A-4N	M-32
STS44A-4NCG2	M-32
STS46A6NCG1	M-32
SW3A20A44N8	M-39
SW3A22A44N8	M-39
SW3A24A44N8	M-39
SW3A86A44N8	M-39
SW3AB20A44N8	M-40
SW3AB22A44N8	M-40
SW3AB24A44N8	M-40
SW3AB86A44N8	M-40
SWA18A-2N	M-12
SWA18A-34N	M-12
SWA18A-44N	M-12
SWA19A-2N	M-12
SWA19A-34N	M-12
SWA19A-44N	M-12
SWA20A-2N	M-12
SWA20A-34N	M-12
SWA20A-44N	M-12
SWA21A-34N	M-12
SWA21A-44N	M-12
SWA22A-44N	M-12
SWA23A-44N	M-12
SWA24A-34N	M-12
SWA24A-44N	M-12
SWA444A-44N	M-11
SWA44R-44N	M-11
SWA486A-44N	M-11
SWA486A-4N	M-11
SWA486A-66N	M-11
SWA48A-44N	M-11
SWA493R-4N	M-11
SWA54R-44N	M-11
SWA58A-2N	M-12
SWA58A-34N	M-12
SWA58A-44N	M-12
SWA58R-44N	M-11
SWA59A-2N	M-12
SWA59A-34N	M-12
SWA59A-44N	M-12
SWA86A-44N	M-12
SWA90A-2N	M-12
SWA90A-34N	M-12
SWA90A-44N	M-12
SWA91A-34N	M-12
SWA91A-44N	M-12
SWA92A-44N	M-12
SWA93A-44N	M-12
SWA94A-34N	M-12
SWA94A-44N	M-12
SWA96A-44N	M-12
SWAB19A2N	M-19
SWAB19A-34N	M-19
SWAB22A2N	M-19
SWAB22A-34N	M-19
SWAB22A-44N	M-19
SWAB86A2N	M-19
SWAB86A34N	M-19
SWAB86A-44N	M-19
SWAC18A-2N	M-13
SWAC18A-34N	M-13
SWAC18A-44N	M-13
SWAC19A-2N	M-13
SWAC19A-34N	M-13
SWAC19A-44N	M-13
SWAC20A-2N	M-13
SWAC20A-34N	M-13
SWAC20A-44N	M-13
SWAC21A-34N	M-13
SWAC21A-44N	M-13
SWAC22A-34N	M-13
SWAC22A-44N	M-13
SWAC23A-34N	M-13
SWAC24A-34N	M-13
SWAC24A-44N	M-13
SWAC58A-2N	M-13
SWAC58A-34N	M-13
SWAC58A-44N	M-13
SWAC59A-2N	M-13
SWAC59A-34N	M-13
SWAC59A-44N	M-13
SWAC86A-44N	M-13
SWAC90A-2N	M-13
SWAC90A-34N	M-13
SWAC90A-44N	M-13
SWAC91A-34N	M-13
SWAC91A-44N	M-13
SWAC92A-34N	M-13
SWAC92A-44N	M-13
SWAC93A-34N	M-13
SWAC94A-34N	M-13
SWAC94A-44N	M-13
SWAC96A-44N	M-13
SWAT18A16A-30	M-23
SWAT18A17A-30	M-23
SWAT18A18A-30	M-23
SWAT19A16A-30	M-23
SWAT19A17A-30	M-23
SWAT19A18A-30	M-23
SWAT20A17A-30	M-23
SWAT20A18A-30	M-23
SWAT20A19A-30	M-23
SWAT21A16A-30	M-23
SWAT21A17A-30	M-23
SWAT21A18A-30	M-23
SWAT21A19A-30	M-23
SWAT21A20A-30	M-23
SWAT22A18A-30	M-23
SWAT22A19A-30	M-23
SWAT22A20A-30	M-23
SWAT24A18A-30	M-23
SWAT24A19A-30	M-23
SWAT24A20A-30	M-23
SWAT86A20A-30	M-23
SWAT86A21A-30	M-23
SWAT86A22A-30	M-23

ALPHA-NUMERIC INDEX BY CATALOG NUMBER (Continued)

Catalog Number	Page #
SWCB19A	M-30
SWCB20A	M-30
SWCB22A	M-30
SWCB24A	M-30
SWCB86A	M-30
SWHRH18A-3CH	M-25
SWHRH18A-5CH	M-25
SWHRH19A-3CH	M-25
SWHRH19A-5CH	M-25
SWHRH20A-3CH	M-25
SWHRH20A-5CH	M-25
SWHRH21A-3CH	M-25
SWHRH21A-5CH	M-25
SWHRH22A-3CH	M-25
SWHRH22A-5CH	M-25
SWHRH24A-3CH	M-25
SWHRH24A-5CH	M-25
SWHRH86A-3CH	M-25
SWHRH86A-5CH	M-25
SWL18A	M-28
SWL19A	M-28
SWL20A	M-28
SWL21A	M-28
SWL22A	M-28
SWL24A	M-28
SWL58A	M-28
SWL59A	M-28
SWL86A	M-28
SWL90A	M-28
SWL91A	M-28
SWL92A	M-28
SWL93A	M-28
SWL96A	M-28
SWOH18A-3	M-24
SWOH18A-5	M-24
SWOH19A-3	M-24
SWOH19A-5	M-24
SWOH20A-3	M-24
SWOH20A-5	M-24
SWOH21A-5	M-24
SWOH22A-3	M-24
SWOH22A-5	M-24
SWOH24A-5	M-24
SWOH86A-5	M-24
SWT17A17A	M-20
SWT18A16A75	M-22
SWT18A17A75	M-22
SWT19A16A75	M-22
SWT19A17A75	M-22
SWT19A18A75	M-22
SWT19A19A	M-20
SWT20A17A75	M-22
SWT20A18A75	M-22
SWT20A19A75	M-22
SWT21A14A	M-20
SWT21A15A	M-20
SWT21A16A	M-20
SWT21A16A75	M-22
SWT21A17A	M-21
SWT21A17A75	M-22
SWT21A18A	M-21
SWT21A18A75	M-22
SWT21A19A	M-21
SWT21A19A75	M-22
SWT21A20A	M-21
SWT22A18A	M-21
SWT22A18A75	M-22
SWT22A19A	M-21
SWT22A19A75	M-22
SWT22A20A	M-21
SWT22A20A75	M-22
SWT22A21A	M-21
SWT22A22A	M-21
SWT24A18A75	M-22
SWT24A19A75	M-22
SWT24A20A	M-21
SWT24A20A75	M-22
SWT24A21A	M-21
SWT24A22A	M-21
SWT24A24A	M-21
SWT86A20A	M-21
SWT86A20A75	M-22
SWT86A21A	M-21
SWT86A21A75	M-22
SWT86A22A	M-21
SWT86A22A75	M-22
SWT86A24A	M-21
SWT86A86A	M-21
SWVH19A-5	M-26
SWVH19A-7	M-26
SWVH20A-5	M-26
SWVH20A-7	M-26
SWVH22A-5	M-26
SWVH22A-7	M-26
SWVH24A-5	M-26
SWVH86A-5	M-26
SWVH86A-7	M-26
SWXA20A-44N	M-15
SWXA20A-4NK8	M-14
SWXA22A-44N	M-15
SWXA22A-4NK8	M-14
SWXA24A-44N	M-15
SWXA24A-4NK8	M-14
SWXA86A-44N	M-15
SWXA86A-4NK8	M-14
SWXA92A-44N	M-15
SWXA92A-4NK8	M-14
SWXA94A-44N	M-15
SWXA94A-4NK8	M-14
SWXA96A-4NK8	M-14
SWXHP19A-5	M-27
SWXHP20A-5	M-27
SWXHP21A-5	M-27
SWXHP22A-5	M-27
SWXHP24A-5	M-27
SWXHP59A-5	M-27
SWXHP86A-5	M-27
SWXHP90A-5	M-27
SWXHP91A-5	M-27
SWXHP92A-5	M-27
SWXHP94A-5	M-27
SWXHP96A-5	M-27
SWXP20A20A	M-18
SWXP22A22A	M-18
SWXP24A24A	M-18
SWXP86A86A	M-18
SWXP90A90A	M-18
SWXP92A92A	M-18
SWXP94A94A	M-18
SWXP96A96A	M-18
T10-10	B-5
T1010BF	B-37
T10-10F	B-27
T1010LF	B-32
T10-12	B-5
T10-14	B-5
T10-14F	B-27
T10-38	B-5
T10-516	B-5
T10-6	B-5
T106BF	B-37
T10-6F	B-27
T106LF	B-32
T10-8	B-5
T108BF	B-37
T10-8F	B-27
T108LF	B-32
T14-10	B-5
T1410BF	B-37
T14-10F	B-27
T1410LF	B-32
T14-14	B-5
T14-14F	B-27
T14-38	B-5
T14-4	B-5
T14-516	B-5
T14-6	B-5
T146BF	B-37
T14-6F	B-27
T146LF	B-32
T14-8	B-5
T148BF	B-37
T14-8F	B-27
T148LF	B-32
T1610BF	B-37
T1610LF	B-32
T166BF	B-37
T166LF	B-32
T168BF	B-37
T168LF	B-32
T18-10	B-5
T18-10F	B-27
T18-14	B-5
T18-14F	B-27
T18-38	B-5
T18-4	B-5
T18-516	B-5
T18-6	B-5
T18-6F	B-27
T18-8	B-5
T18-8F	B-27
TBPT10	A-42
TBPT12	A-42
TBPT6	A-42
TBPT8	A-42
TDM177RG1	I-61
TDM177RG2	I-61
TDM210RG1	I-61
TDM210RG2	I-61
TDM246RG1	I-61
TDM330RG1	I-61
TDM393RG1	I-61
TDM430RG1	I-61
TDM99RG1	I-61
TFV3B12V2	G-17
TFV3B18V2	G-17
TFV3B6V2	G-17
TFV3BLU12	G-17
TFV3BLU18	G-17
TMH261	D-8
TMH261SS	D-8
TMH262	D-8
TMH262SS	D-8
TMH263	D-8
TMH263SS	D-8
TMH264	D-8
TMH264SS	D-8
TMH265	D-8
TMH265SS	D-8
TMH266	D-8
TMH267	D-8
TMH267SS	D-8
TMH268	D-8
TMH268SS	D-8
TMH269	D-8
TMH269SS	D-8
TMH270	D-8
TMH270SS	D-8
TMH271	D-8
TMH271SS	D-8
TMH272	D-8
TMH272SS	D-8
TMH289	D-8
TMH294	D-8
TMH294SS	D-8
TMH295	D-8
TMH295SS	D-8
TMH322SS	D-8
TMH332	D-8
TMH69	D-8
TMH69SS	D-8
TN10-10	B-9
TN1010BF	B-39
TN10-10F	B-29
TN10-10LF	B-34
TN10-12	B-9
TN10-14	B-9
TN10-14F	B-29
TN10-38	B-9
TN10-516	B-9
TN10-6	B-9
TN106BF	B-39
TN10-6F	B-29
TN10-6LF	B-34
TN10-8	B-9
TN108BF	B-39
TN10-8F	B-29
TN10-8LF	B-34
TN14-10	B-9
TN1410BF	B-39
TN14-10F	B-29
TN14-10LF	B-34
TN14-14	B-9
TN14-14F	B-29
TN14-38	B-9
TN14-4	B-9
TN14-516	B-9
TN14-6	B-9
TN146BF	B-39
TN14-6F	B-29

ALPHA-NUMERIC INDEX BY CATALOG NUMBER (Continued)

Catalog Number	Page #
TN14-6G1	B-9
TN14-6LF	B-34
TN14-8	B-9
TN148BF	B-39
TN14-8F	B-29
TN14-8LF	B-34
TN18-10	B-9
TN1810BF	B-39
TN18-10F	B-29
TN18-10LF	B-34
TN18-14	B-9
TN18-14F	B-29
TN18-38	B-9
TN18-4	B-9
TN184F	B-29
TN18-516	B-9
TN18-6	B-9
TN186BF	B-39
TN18-6F	B-29
TN18-6G1	B-9
TN18-6LF	B-34
TN18-8	B-9
TN188BF	B-39
TN18-8F	B-29
TN18-8LF	B-34
TN20-2F	B-29
TN20-6F	B-29
TP10-10	B-8
TP1010BF	B-38
TP10-10F	B-28
TP10-10LF	B-33
TP10-10Z	B-42
TP10-12	B-8
TP10-14	B-8
TP10-38	B-8
TP10-516	B-8
TP10-6	B-8
TP106BF	B-38
TP10-6F	B-28
TP10-6LF	B-33
TP10-6Z	B-42
TP10-8	B-8
TP108BF	B-38
TP10-8F	B-28
TP10-8LF	B-33
TP10-8Z	B-42
TP14-10	B-8
TP1410BF	B-38
TP14-10F	B-28
TP14-10LF	B-33
TP14-10Z	B-42
TP14-14	B-8
TP14-2F	B-28
TP14-2Z	B-42
TP14-38	B-8
TP14-4	B-8
TP14-516	B-8
TP14-6	B-8
TP146BF	B-38
TP14-6F	B-28
TP14-6LF	B-33
TP14-6Z	B-42
TP14-8	B-8
TP148BF	B-38
TP14-8F	B-28
TP14-8LF	B-33
TP14-8Z	B-42
TP16-10	B-8
TP1610BF	B-38
TP16-10F	B-28
TP16-10LF	B-33
TP16-10Z	B-42
TP16-14	B-8
TP16-2F	B-28
TP16-2Z	B-42
TP16-38	B-8
TP16-4	B-8
TP16-516	B-8
TP16-6	B-8
TP166BF	B-38
TP16-6F	B-28
TP16-6LF	B-33
TP16-6Z	B-42
TP16-8	B-8
TP168BF	B-38
TP16-8F	B-28
TP16-8LF	B-33
TP16-8Z	B-42
TS-KD	N-105
TS-RD	N-105
TS-SQ	N-105
TTV10	B-75
TTV14	B-75
TTV18	B-75
TWT1	G-26
TWT2	G-26
U1011	N-7
U1104	N-7
U1105	N-7
U1CART	N-5, N-7
U1CRT-1	N-5, N-7
U1CRT-1W	N-5, N-7
U25ART	N-5, N-7
U25RT	N-5, N-7
U25RTW	N-5, N-7
U26ART	N-5, N-7
U26RT	N-5, N-7
U26RTW	N-5, N-7
U27ART	N-5, N-7
U27RT	N-5, N-7
U27RTW	N-5, N-7
U28ART	N-5, N-7
U28RT	N-5, N-7
U28RTW	N-5, N-7
U29ART	N-5, N-7
U29RT	N-5, N-7
U2CABT	N-5, N-7
U2CRT	N-5, N-7
U2CRTW	N-5, N-7
U30ART	N-5, N-7
U30RT	N-5, N-7
U31ART	N-5, N-7
U31RT	N-5, N-7
U32ART	N-5, N-7
U32RT	N-5, N-7
U34ART	N-5, N-7
U34RT	N-5, N-7
U36ART	N-5, N-7
U36RT	N-5, N-7
U38XRT	N-5
U39ART-2	N-5, N-7
U39RT	N-5, N-7
U3CRT	N-5
U3CRTW	N-5
U44XRT	N-5
U4CABT	N-5, N-7
U4CRT	N-5, N-7
U4CRTW	N-5, N-7
U5CRT	N-5, N-7
U5CRTW	N-5, N-7
U6CABT	N-5, N-7
U8CABT	N-5
U8CRT	N-5
U8CRTW	N-5, N-7
U997	N-7
UB101	D-9
UB1027	D-9
UB1028	D-9
UB1029	D-9
UB1030	D-9
UB1031	D-9
UB1032	D-9
UB1033	D-9
UB104	D-9
UB105	D-9
UB106	D-9
UB107	D-9
UB124	D-9
UB178	D-9
UB187	D-9
UB199	D-9
UB204	D-9
UB222	D-9
UB224	D-9
UB230	D-9
UB232	D-9
UB236	D-9
UB242	D-9
UB244	D-9
UB249	D-9
UB254	D-9
UB257	D-9
UB258	D-9
UB260	D-9
UB261	D-9
UB262	D-9
UB263	D-9
UB264	D-9
UB266	D-9
UB267	D-9
UB268	D-9
UB269	D-9
UB271	D-9
UB275	D-9
UB282	D-9
UB291	D-9
UB293	D-9
UB294	D-9
UB300	D-9
UB302	D-9
UB306	D-9
UB310	D-9
UB311	D-9
UB314	D-9
UB315	D-9
UB317	D-9
UB318	D-9
UB319	D-9
UB328	D-9
UB336	D-9
UB344	D-9
UB354	D-9
UB357	D-9
UB358	D-9
UB383	D-9
UB384	D-9
UB390	D-9
UB392	D-9
UB399	D-9
UB400	D-9
UB416	D-9
UB422	D-9
UB425	D-9
UB436	D-9
UB437	D-9
UB464	D-9
UB540	D-9
UC	N-7
UC25R2R	H-16
UC25R2RS	H-16
UC2834	H-13
UC28R	H-16
UC28RS	H-16
UC2W28-L	H-10
UC2W30	H-13
UC3040	H-13
UC32R	H-16
UC32RS	H-16
UC33R	H-16
UC3444	H-13
UC4W28	H-13
UC4W28CONKIT	H-18
UC6W25	H-13
UC6W25CONKIT	H-18
UC8W26-L	H-10
UCCOVER1BOX25	H-18
UCG25R	H-16
UCG25R2R	H-16
UCG25R2RS	H-16
UCG25RS	H-16
UCG28R	H-16
UCG28RS	H-16
UCG32R	H-16
UCG32RS	H-16
UCK-1UL	H-10
UCK-2UL	H-10
UCK-3UL	H-10
UCT26RS	H-17
UCT32RS	H-17
UCTCOVER	H-18
UCU28AC	A-38
UDIEKITAL	N-7
UDIEKITCU	N-7
UDIEKITCUW	N-7
UDIEKITHYGRD	N-7
UGS350ULDB	A-35
UGSKIT2	A-33
UGSKIT250	A-33
UGSKIT8	A-35
UH143	L-17

ALPHA-NUMERIC INDEX BY CATALOG NUMBER (Continued)

Catalog Number	Page #
UH153	L-17
UH155	L-17
UH163	L-17
UH165	L-17
UH173	L-17
UH175	L-17
UH183	L-17
UH185	L-17
UH193	L-17
UH195	L-17
UH203	L-17
UH205	L-17
UH225	L-17
UHG13A3CH	L-32
UHG14A-3	L-32
UHG14A3CH	L-32
UHG15A-3	L-32
UHG15A3CH	L-32
UHG15A-5	L-32
UHG15A5CH	L-32
UHG16A3CH	L-32
UHG16A5CH	L-32
UHG17A-3	L-32
UHG17A3CH	L-32
UHG17A-5	L-32
UHG17A5CH	L-32
UHG18A-3	L-32
UHG18A3CH	L-32
UHG18A-5	L-32
UHG18A5CH	L-32
UHG19A-3	L-32
UHG19A3CH	L-32
UHG19A5CH	L-32
UHG20A3CH	L-32
UHG20A-5	L-32
UHG20A5CH	L-32
UHG20A7CH	L-32
UHG21A-3	L-32
UHG21A3CH	L-32
UHG21A5CH	L-32
UHG22A3CH	L-32
UHG22A-5	L-32
UHG22A5CH	L-32
UHG24A-3	L-32
UHG24A3CH	L-32
UHG24A-5	L-32
UHG24A5CH	L-32
UHG83A5	L-32
UHG86A5CH	L-32
UHKR11A3	L-33
UHKR11A5	L-33
UHKR13A3	L-33
UHKR13A5	L-33
UHKR14A3	L-33
UHKR14A5	L-33
UHKR16A3	L-33
UHKR16A5	L-33
UHKR17A3	L-33
UHKR17A5	L-33
UHR133	L-17
UHR135	L-17
UHR153	L-17
UHR153SS	L-17
UHR155	L-17
UHR173	L-17
UHR175	L-17
UHR183	L-17
UHR185	L-17
UO	N-7
UP34R	H-68
UP45R	H-68
UP45R36R	H-68
UW25R	H-12
UW2R	H-12
VA25	A-20, L-8
VA252	L-8
VA28	A-20, L-8
VA28-2N	A-20, L-8
VA2C	A-20, L-8
VA30	A-20, L-8
VA30-2N	A-20, L-8
VA34	A-20, L-8
VA34-2N	A-20, L-8
VA344	L-8
VA34-4N	A-20
VA40	A-20, L-8
VA40-2N	A-20, L-8
VA404	L-8
VA40-4N	A-20, L-8
VA44	L-8
VA444	L-8
VA462N	L-8
VA4C	L-8
VG1	H-9
VG2	H-9
VG3	H-9
VG4	H-9
VG5	H-9
VP2828	H-12
VP3030	H-12
VP3430	H-12
VP3434	H-12
VP4030	H-12
VP4040	H-12
VP4440	H-12
VP4646	H-12
VT2525	A-19, H-15, L-14
VT2825	A-19, H-15, L-14
VT2828	A-19, H-15, L-14
VT2C2C	A-19, H-15, L-14
VT3025	A-19, H-15, L-14
VT3028	L-14
VT3030	A-19, H-15
VT3425	A-19, H-15
VT3428	A-19, H-15
VT3430	A-19, H-15
VT3434	A-19, H-15
VT4034	L-14
VT4040	A-19, H-15
VT4425	A-19, H-15
VT4428	A-19, H-15
VT4430	L-14
VT4434	L-14
VT4440	L-14
VT4444	L-14
VT4628	L-14
VT4630	L-14
VT4640	L-14
VT4830	L-14
VT4834	A-19, H-15
VT4840	L-14
VT4844	L-14
VT4848	L-14
VVA25	A-20, L-9
VVA25-2	L-9
VVA28	A-20, L-9
VVA28-2N	A-20, L-9
VVA2C	A-20, L-9
VVA30	A-20, L-9
VVA30-2N	A-20, L-9
VVA30-4N	L-9
VVA34	A-20, L-9
VVA34-2N	A-20, L-9
VVA34-4	L-9
VVA34-4N	A-20, L-9
VVA40	A-20, L-9
VVA40-2N	A-20, L-9
VVA40-4N	A-20, L-9
VVA40-4NCG1	L-9
VVA44-2N	L-9
VVA44-4N	L-9
VVA46-2N	L-9
VVA46-4NCG2	L-9
VVA46-4NCG4	L-9
VVA48-2N	L-9
VYFT3428CCP	K-50
VYFT3428CCR	K-50
VYFT3434CCP	K-50
VYFT3434CCR	K-50
VYFT3934CCP	K-50
VYFT3934CCR	K-50
VYFT4434CCP	K-50
VYFT4434CCR	K-50
W161	N-6
W162	N-6
W163	N-6
W166	N-6
W1CRT-1	N-6
W1CVT	N-6
W239	N-6
W241	N-6
W245	N-6
W249	N-6
W25RT	N-6
W25VT	N-6
W26RT	N-6
W26VT	N-6
W27RT	N-6
W27VT	N-6
W28K	N-23, N-24, N-66
W28RT	N-6
W28VT	N-6
W29RT	N-6
W29VT	N-6
W2CRT	N-6
W2CVT	N-6
W30RT	N-6
W30VT	N-6
W31ART	N-6
W31RT	N-6
W31VT	N-6
W32RT	N-6
W32VT	N-6
W33RT	N-6
W33VT	N-6
W34RT	N-6
W34VT	N-6
W36RT	N-6
W3CRT	N-6
W3CVT	N-6
W4CRT	N-6
W4CVT	N-6
W5CRT	N-6
W5CVT	N-6
W660	N-6
W-687	N-66
W-702	N-66
W8CRT	N-6
W8CVT	N-6
WAD1015	J-16
WAD1029	J-16
WAD1035	J-16
WAD336-15	J-16
WAD336-29	J-16
WAD336-35	J-16
WAD4015	J-16
WAD4029	J-16
WAD4035	J-16
WAD477-15	J-16
WAD477-29	J-16
WAD477-35	J-16
WAD556-15	J-16
WAD556-29	J-16
WAD556-35	J-16
WAD795-15	J-16
WAD795-29	J-16
WAD795-35	J-16
WAS14A-2N	L-35
WAS15A-2N	L-35
WAS15A-34N	L-35
WAS16A-2N	L-35
WAS16A34N	L-35
WAS17A-2N	L-35
WAS17A-34N	L-35
WAS18A-2N	L-35
WAS18A-34N	L-35
WAS18A44N	L-35
WAS19A-2N	L-35
WAS19A-34N	L-35
WAS19A-44N	L-35
WAS20A-2N	L-35
WAS20A-34N	L-35
WAS20A-44N	L-35
WAS21A34N	L-35
WAS22A34N	L-35
WAS22A-44N	L-35
WASC15A2N	L-36
WASC16A34N	L-36
WASC17A2N	L-36
WASC17A34N	L-36
WASC18A2N	L-36
WASC18A34N	L-36
WASC19A34N	L-36
WASC19A44N	L-36
WASC20A2N	L-36
WASC20A34N	L-36
WASC20A44N	L-36
WASC21A34N	L-36
WASC21A44N	L-36
WASC22A34N	L-36

ALPHA-NUMERIC INDEX BY CATALOG NUMBER (Continued)

Catalog Number	Page #
WASC22A44N	L-36
WASC24A44N	L-36
WASC24A66N	L-36
W-BG	N-66
WCAB30R-2N	J-13
WCAB30R-4N	J-13
WCAY39R-2N	J-13
WCAY39R-4N	J-13
WCAY49R-2N	J-13
WCAY49R-4N	J-13
WCB10	J-6
WCB10C2	J-9
WCB11	J-6
WCB11PB	J-13
WCB12	J-6
WCB13	J-6
WCB14	J-6
WCB15	J-6
WCB16	J-6
WCB17	J-6
WCB18	J-6
WCB19	J-6
WCB20	J-6
WCB20C2	J-9
WCB20C20	J-9
WCB21	J-6
WCB22	J-6
WCB23	J-6
WCB24	J-6
WCB25	J-6
WCB250C2	J-9
WCB250C20	J-9
WCB250C250	J-9
WCB26	J-6
WCB27	J-6
WCB28	J-6
WCB2C2	J-9
WCB30C2	J-9
WCB40	J-6
WCB40C2	J-9
WCB40C20	J-9
WCB40C40	J-9
WCB41	J-6
WCB42	J-6
WCB43	J-6
WCB44	J-6
WCB45	J-6
WCB46	J-6
WCB47	J-6
WCB4C4	J-9
WCBB30R-4N	J-13
WCBY39R-4N	J-13
WCBY49R-4N	J-13
WCCB	J-5
WCCLY	J-5
WCCR	J-5
WCCSY	J-5
WCHAWAS	J-14
WCR29	J-6
WCR30	J-6
WCR31	J-6
WCR32	J-6
WCR33	J-6
WCR34	J-6
WCR35	J-6
WCR36	J-6
WCR37	J-6
WCY100	J-8
WCY101	J-8
WCY102	J-8
WCY103	J-8
WCY104	J-8
WCY105	J-8
WCY106	J-8
WCY107	J-8
WCY108	J-8
WCY109	J-8
WCY110	J-8
WCY111	J-8
WCY112	J-8
WCY113	J-8
WCY114	J-8
WCY115	J-8
WCY116	J-8
WCY117	J-8
WCY118	J-8
WCY119	J-8
WCY120	J-8
WCY121	J-8
WCY122	J-8
WCY123	J-8
WCY124	J-8
WCY125	J-8
WCY126	J-8
WCY127	J-8
WCY128	J-8
WCY129	J-8
WCY130	J-8
WCY131	J-8
WCY132	J-8
WCY133	J-8
WCY134	J-8
WCY135	J-8
WCY136	J-8
WCY137	J-8
WCY138	J-8
WCY139	J-8
WCY140	J-8
WCY145	J-8
WCY48	J-6
WCY49	J-6
WCY50	J-6
WCY51	J-6
WCY52	J-7
WCY53	J-7
WCY53PB	J-13
WCY54	J-7
WCY54PB	J-13
WCY55	J-7
WCY56	J-7
WCY57	J-7
WCY58	J-7
WCY59	J-7
WCY60	J-7
WCY61	J-7
WCY62	J-7
WCY63	J-7
WCY63PB	J-13
WCY64	J-7
WCY64PB	J-13
WCY65	J-7
WCY65PB	J-13
WCY66	J-7
WCY67	J-7
WCY68	J-7
WCY69	J-7
WCY70	J-7
WCY71	J-7
WCY72	J-7
WCY73	J-7
WCY74	J-7
WCY75	J-7
WCY76	J-7
WCY77	J-7
WCY78	J-7
WCY79	J-7
WCY80	J-7
WCY81	J-7
WCY82	J-7
WCY83	J-7
WCY84	J-7
WCY85	J-7
WCY86	J-7
WCY87	J-7
WCY88	J-7
WCY89	J-7
WCY90	J-7
WCY91	J-7
WCY92	J-7
WCY93	J-7
WCY94	J-7
WCY95	J-7
WCY96	J-7
WCY97	J-7
WCY98	J-7
WCY99	J-7
WDA8300	N-32
WDC4500	N-32
WDIETREE	N-21, N-22, N-66
WG19A	L-37
WG86A	L-37
WHHWB	J-14
WHSCWH	J-14
WHSGB	J-14
WHSPBC	J-14
WHSSADP	J-14
WHSTA	J-14
WHSWB	J-14
WHSWHADP	J-14
Wiley PV Solutions	E-32, E-33
WIREMIKE	N-25, N-37, N-67
WLB15A	M-29
WLB16A	M-29
WLB17A	M-29
WLB18A	M-29
WLB19A	M-29
WLB20A	M-29
WLB21A	M-29
WLB22A	M-29
WLB24A	M-29
WLB55A	M-29
WLB56A	M-29
WLB57A	M-29
WLB58A	M-29
WLB59A	M-29
WLB86A	M-29
WLB90A	M-29
WLB91A	M-29
WLB92A	M-29
WLB94A	M-29
WLB96A	M-29
WS14A	M-17
WS15A	M-17
WS16A	M-17
WS17A	M-17
WS18A	M-17
WS19A	M-17
WS20A	M-17
WS21A	M-17
WS22A	M-17
WS24A	M-17
WS58A	M-17
WS59A	M-17
WS86A	M-17
WS90A	M-17
WS91A	M-17
WS92A	M-17
WS94A	M-17
WS96A	M-17
WSBC128A	M-31
WSBC74A	M-31
WSBC83A	M-31
WSL1	J-11
WSL10	J-11
WSL11	J-11
WSL12	J-11
WSL13	J-11
WSL14	J-11
WSL2	J-11
WSL3	J-11
WSL4	J-11
WSL5	J-11
WSL6	J-11
WSL7	J-11
WSL8	J-11
WSL9	J-11
WSLB15A	M-16
WSLB16A	M-16
WSLB17A	M-16
WSLB18A	M-16
WSLB19A	M-16
WSLB20A	M-16
WSLB21A	M-16
WSLB22A	M-16
WSLB24A	M-16
WSLB55A	M-16
WSLB56A	M-16
WSLB57A	M-16
WSLB58A	M-16
WSLB59A	M-16
WSLB86A	M-16
WSLB90A	M-16
WSLB91A	M-16
WSLB92A	M-16
WSLB94A	M-16
WSLB96A	M-16
WSM1	J-11
WSM10	J-11
WSM11	J-11
WSM2	J-11

ALPHA-NUMERIC INDEX BY CATALOG NUMBER (Continued)

Catalog Number	Page #
WSM3	J-11
WSM4	J-11
WSM5	J-11
WSM6	J-11
WSM7	J-11
WSM8	J-11
WSM9	J-11
WSS1	J-11
WSS2	J-11
WT2B2RBYK	J-15
WT2B2RBYWABAG	J-15
WT2BRBYK	J-15
WT2BRBYWABAG	J-15
WTB	J-12
WTBASY1	J-12
WTBGBWRBYK	J-15
WTCK	J-12
WTHRB1S	J-12
WTHY1S	J-12
WTOCBR	J-12
WTOCY	J-12
WTRB	J-15
WTRBK	J-15
WTRBKNHS	J-15
WTRBKNHSBAG	J-15
WTRBWABAG	J-15
WTRBYK	J-15
WTRBYKNHS	J-15
WTRBYKNHSGAB	J-15
WTRBYWABAG	J-15
WTY	J-15
WTYK	J-15
WTYKNHS	J-15
WTYKNHSBAG	J-15
WTYWABAG	J-15
X161	N-61
X241	N-61
X245	N-61
X247	N-61
X249	N-61
X660	N-61
X840	N-61
X8CART	N-6
XA132N	L-10
XA142N	L-10
XA144N	L-10
XA152N	L-10
XA154N	L-10
XA15A-4N	L-29
XA162N	L-10
XA164N	L-10
XA16A-4N	L-29
XA172N	L-10
XA174N	L-10
XA184N	L-10
XA18A-4N	L-29
XA194N	L-10
XA19A-4N	L-29
XA204N	L-10
XA20A-4N	L-29
XA214N	L-10
XA21A-4N	L-29
XA224N	L-10
XA22A-4N	L-29
XA24A-4N	L-29
XA574N	L-10
XA594N	L-10
XBG	N-61
XNBG	N-61
XOH25	N-61
XP1313	L-16
XP1414	L-16
XP1515	L-16
XP1616	L-16
XP1717	L-16
XP1818	L-16
XP1919	L-16
XP1919HC	L-16
XP2020	L-16
XP2121	L-16
XP2222	L-16
XP5656	L-16
Y10-22	N-46
Y10AC9	N-90
Y10D	N-45
Y10MRSA1	N-54
Y-11	K-57
Y122CMR	N-55
Y-15	K-57
Y1MRKIT	N-56
Y1MRTC	N-56
Y1MRTCKIT	N-56
Y-22.5	K-57
Y-25	K-57
Y281CR	C-112
Y2825R	C-112
Y2826R	C-112
Y2827R	C-112
Y282CR	C-112
Y284CR	C-112
Y284WR	C-112
Y286CR	C-112
Y2928R	C-112
Y29BH	N-44
Y29NC	N-69
Y2CNC	N-68
Y3025R	C-112
Y3026R	C-112
Y3027R	C-112
Y3028R	C-112
Y302CR	C-112
Y304CR	C-112
Y3126R	C-112
Y3128R	C-112
Y3129R	C-112
Y3425R	C-112
Y3426R	C-112
Y3427R	C-112
Y3428R	C-112
Y3429R	C-112
Y342CR	C-112
Y3430R	C-112
Y3431R	C-112
Y3432R	C-112
Y34A	N-27
Y34BH	N-43
Y35	N-26
Y35/Y39REPKITA	N-27
Y35-2	N-26
Y35B	N-38
Y35BH	N-38
Y35BH-4	N-38
Y35H	N-38
Y35P3	N-27
Y-37.5	K-57
Y39	N-28
Y3934R	C-112
Y3936R	C-112
Y39BH	N-39
Y4439R	C-112
Y45	N-36
Y46	N-35
Y46-2	N-35
Y46C	N-35
Y4PC834	N-31
Y4PC834MBH	N-42
Y-50	K-57
Y500CT-HS	N-32
Y60BHU	N-33
Y60LW	N-34
Y644HSCASE	N-29
Y644HSXT	N-29
Y644MBH	N-40
Y6NCP1	N-68
Y6NCP1BMNT	N-68
Y6NCP1FTSW	N-68
Y6NCP1SD	N-68
Y-7.5	K-57
Y750BHXT	N-37
Y750CBHXT	N-37
Y750CHSXT	N-25
Y750HSCASE	N-25
Y750HSXT	N-25
Y81KFT	N-30
Y81KFTMBH	N-41
Y8MRB-1	N-49
YA10A-TN	C-143
YA12A-TN	C-143
YA15ALKIT	C-17
YA1C	C-28
YA1C-2L	C-35
YA1C-2LN	C-35
YA1C2N	C-41
YA1C2NU	C-19
YA1C2TC14	C-41
YA1C2TC14E2	C-41
YA1C2TC38	C-41
YA1CA1	C-144
YA1CL2	C-22
YA1CL2NT14	C-38
YA1CL2NT14E2	C-38
YA1CL-2TC14	C-35
YA1CL-2TC14E2	C-35
YA1CL-2TC38	C-35
YA1CL4-BOX	C-22
YA1CL6-BOX	C-22
YA1C-LB	C-55
YA1CL-BOX	C-22
YA1CLNT10	C-25
YA1CLNT14	C-25
YA1CN	C-28
YA1CTC10	C-28
YA1CTC14	C-28
YA1CTC38	C-28
YA25	C-28
YA25-2L	C-35
YA25-2LN	C-35
YA252N	C-41
YA252NTC38	C-41
YA252NU	C-19
YA252TC14	C-41
YA252TC14E2	C-41
YA252TC38	C-41
YA252TC516	C-41
YA25A1	C-144
YA25A1S60T516E	C-107
YA25A3	C-144
YA25A3N69T38E	C-107
YA25A5	C-146
YA25A7	C-146
YA25A9	C-144
YA25L2-BOX	C-22
YA25L2NT14	C-38
YA25L2NT14E1	C-38
YA25L-2TC14	C-35
YA25L-2TC14E1	C-35
YA25L-2TC14E2	C-35
YA25L-2TC38	C-35
YA25L4-BOX	C-22
YA25L4TCG1	C-85
YA25L6-BOX	C-22
YA25-LB	C-55
YA25L-BOX	C-22
YA25LN50T14E	C-107
YA25LN64T516E	C-107
YA25LNT10	C-25
YA25LNT14	C-25
YA25LNT38	C-25
YA25LNT516	C-25
YA25N	C-28
YA25TC10	C-28
YA25TC38	C-28
YA26	C-29
YA26-2L	C-36
YA26-2LH89	H-41
YA26-2LN	C-36
YA262N	C-41
YA262NU	C-19
YA262TC14	C-41
YA262TC14E2	C-41
YA262TC38	C-41
YA26A1	C-144
YA26A13N100T516E	C-107
YA26A3	C-146
YA26A5	C-146
YA26A6	C-144
YA26A6N100T38E	C-107
YA26L2-BOX	C-22
YA26L2NT14	C-38
YA26L2NT14E1	C-38
YA26L-2TC14	C-36
YA26L-2TC14E1	C-36
YA26L-2TC14E2	C-36
YA26L-2TC38	C-36
YA26L4TCG1	C-85
YA26L60	C-22
YA26L6-BOX	C-22
YA26-LB	C-55
YA26L-BOX	C-22
YA26LN50T14E	C-107

ALPHA-NUMERIC INDEX BY CATALOG NUMBER (Continued)

Catalog Number	Page #
YA26LNT10	C-25
YA26LNT14	C-25
YA26LNT38	C-25
YA26LNT516	C-25
YA26N	C-29
YA26TC14	C-29
YA26TC516	C-29
YA27	C-29
YA27-2LN	C-36
YA272N	C-41
YA272NU	C-19
YA272TC14E2	C-41
YA272TC38	C-41
YA27A1	C-144
YA27A10S76T516E	C-107
YA27A3	C-144
YA27A5	C-146
YA27A7	C-146
YA27L2NT14	C-38
YA27L2NT38	C-38
YA27L2NT516	C-38
YA27L-2TC14E2	C-36
YA27L-2TC38	C-36
YA27L3	C-22
YA27L4-BOX	C-22
YA27L4TCG1	C-85
YA27-LB	C-55
YA27L-BOX	C-22
YA27LNT14	C-26
YA27LNT38	C-26
YA27LNT516	C-26
YA28	C-29
YA28-2LH114	H-41
YA28-2LH115	H-41
YA28-2LN	C-36
YA282N	C-41
YA282NTC38	C-41
YA282NU	C-19
YA282TC14E2	C-41
YA282TC38	C-41
YA28A1	C-144
YA28A14N100T516E	C-107
YA28A1N100T38E	C-107
YA28A3	C-144
YA28A5	C-146
YA28A7	C-146
YA28L2	C-23
YA28L2NT14	C-38
YA28L2NTC516	C-36
YA28L-2TC14E1	C-36
YA28L-2TC14E2	C-36
YA28L-2TC38	C-36
YA28L-2TC38E2	C-36
YA28L3	C-23
YA28L4-BOX	C-23
YA28L4TCG1	C-85
YA28L56	C-23
YA28-LB	C-55
YA28L-BOX	C-23
YA28LNT14	C-26
YA28LNT38	C-26
YA28LNT516	C-26
YA28TC38	C-29
YA29	C-29
YA29-2LH91	H-41
YA29-2LN	C-36
YA292N	C-41
YA292NU	C-19
YA292TC38	C-41
YA292TC58E16	C-41
YA29A1	C-144
YA29A3	C-146
YA29A5	C-146
YA29A9	C-144
YA29L2	C-23
YA29L2NT38	C-38
YA29L2NT38E16	C-38
YA29L-2TC38	C-36
YA29L4	C-23
YA29L4TCG1	C-85
YA29L7	C-23
YA29-LB	C-55
YA29L-BOX	C-23
YA29LENT38	C-26
YA29LENT516	C-26
YA29LNT38	C-26
YA29LTC78	C-23
YA2C	C-28
YA2C-2L	C-35
YA2C-2LN	C-35
YA2C2N	C-41
YA2C2NTC38	C-41
YA2C2NU	C-19
YA2C2TC14	C-41
YA2C2TC14E2	C-41
YA2C2TC38	C-41
YA2C2TC38E2	C-41
YA2C2TC38E6	C-41
YA2C2TC38SL	C-81
YA2C2TC38SLBOX500	C-81
YA2C2TC516E2	C-41
YA2CA1	C-144
YA2CA1S91T516E	C-107
YA2CA3	C-144
YA2CA5	C-144
YA2CA5S53T14E	C-107
YA2CA9	C-146
YA2CL2-BOX	C-22
YA2CL2NT14	C-38
YA2CL2NT14E1	C-38
YA2CL2NT14E2	C-38
YA2CL-2TC14	C-35
YA2CL-2TC14E1	C-35
YA2CL-2TC14E2	C-35
YA2CL-2TC38	C-35
YA2CL-2TC516	C-35
YA2CL4-BOX	C-22
YA2CL6-BOX	C-22
YA2C-LB	C-55
YA2CL-BOX	C-22
YA2CLNT10	C-25
YA2CLNT14	C-25
YA2CLNT516	C-25
YA2CN	C-28
YA2CTC10	C-28
YA2CTC14	C-28
YA2CTC38	C-28
YA30	C-29
YA30-2LH85	H-41
YA30-2LN	C-36
YA302N	C-42
YA302N-FXB	C-69
YA302NU	C-19
YA302TC38	C-42
YA30A1	C-144
YA30A1N131T12E	C-108
YA30A3	C-146
YA30A5	C-146
YA30A6	C-144
YA30A6N100T38E	C-108
YA30A9N100T516E	C-107
YA30L	C-23
YA30L1	C-23
YA30L24	C-23
YA30L24N100T38E	C-107
YA30L27	C-23
YA30L28	C-23
YA30-L2NTC-FX	C-62
YA30L-2TC-38	C-36
YA30-L2TC38-FX	C-62
YA30-L2TC516-FX	C-62
YA30L7	C-23
YA30-LB	C-55
YA30LN	C-23
YA30LNT14	C-26
YA30LNT38	C-26
YA30LNT516FX	C-52
YA30L-TC12-FX	C-50
YA30L-TC34-FX	C-50
YA30L-TC38-FX	C-50
YA30L-TC516-FX	C-50
YA30L-TC58-FX	C-50
YA30N	C-29
YA30-TC12-FXB	C-59
YA31	C-29
YA31-2LH90	H-41
YA31-2LN	C-36
YA312N	C-42
YA312N-FXB	C-69
YA312NU	C-19
YA312TC14E2	C-42
YA312TC38	C-42
YA312TC38-FXB	C-69
YA31A1	C-144
YA31A11N100T516E	C-108
YA31A3	C-146
YA31A5	C-146
YA31A9N100T38E	C-108
YA31L	C-23
YA31L11	C-23
YA31L2NT38	C-39
YA31L2NT38E16	C-39
YA31L2NT38FX	C-64
YA31L-2NTC516	C-36
YA31-L2NTC-FX	C-62
YA31L-2TC12	C-36
YA31-L2TC12-FX	C-62
YA31L-2TC14E2	C-36
YA31L-2TC38	C-36
YA31-L2TC38-FX	C-62
YA31L36	C-23
YA31L4TCG1	C-85
YA31L7	C-23
YA31-LB	C-55
YA31LNT12	C-26
YA31L-NT12-FX	C-50, C-52
YA31LNT38	C-26
YA31L-TC12-FX	C-50
YA31L-TC14-FX	C-50
YA31L-TC34-FX	C-50
YA31L-TC38-FX	C-50
YA31L-TC516-FX	C-50
YA31L-TC58-FX	C-50
YA31-TC12-FXB	C-59
YA32	C-29
YA32-2L	C-36
YA32-2LN	C-36
YA322N	C-42
YA322N-FXB	C-70
YA322NU	C-19
YA322TC38	C-42
YA322TC38-FXB	C-70
YA32A1	C-144
YA32A3	C-146
YA32A5	C-146
YA32A8N106T516E	C-108
YA32A9	C-144
YA32L	C-23
YA32L1	C-23
YA32L14	C-23
YA32L2NT38FX	C-64
YA32-L2NTC-FX	C-62
YA32L-2TC38	C-36
YA32L-2TC38E5	C-36
YA32-L2TC38-FX	C-62
YA32-LB	C-55
YA32LN	C-23
YA32LNT12	C-26
YA32LNT38	C-26
YA32LNT38FX	C-52
YA32LNT516FX	C-52
YA32L-TC100-FX	C-50
YA32L-TC12-FX	C-50
YA32L-TC38-FX	C-50
YA32L-TC58-FX	C-50
YA32LTC78	C-23
YA32N	C-29
YA32-TC12-FXB	C-59
YA33	C-29
YA33-2LN	C-37
YA332N	C-42
YA33L	C-23
YA33N	C-29
YA34	C-29
YA34-2L	C-37
YA34-2LH110	H-41
YA34-2LH111	H-41
YA34-2LN	C-37
YA342LNN119T12E	C-107
YA342LNN131T12E	C-107
YA342N	C-42
YA342N-FXB	C-70
YA342NU	C-19
YA342TC14E2	C-42
YA342TC38	C-42
YA342TC38-FXB	C-70
YA34A1	C-144
YA34A3	C-146
YA34A3N131T12E	C-108
YA34A5	C-146

ALPHA-NUMERIC INDEX BY CATALOG NUMBER (Continued)

Catalog Number	Page #
YA34A7N131T12E	C-108
YA34A8N131T38E	C-108
YA34L	C-23
YA34L20	C-23
YA34L2NT12E1	C-39
YA34L2NT38	C-39
YA34L2NT38E16	C-39
YA34L2NT38FX	C-64
YA34-L2NTC38-FX	C-62
YA34-L2NTC-FX	C-62
YA34L-2TC12	C-37
YA34-L2TC12-FX	C-62
YA34L-2TC14E2	C-37
YA34L-2TC38	C-37
YA34-L2TC38-FX	C-62
YA34-L2TC516-FX	C-62
YA34L37	C-23
YA34L6	C-23
YA34L6N131T12E	C-107
YA34L8	C-23
YA34L9	C-23
YA34-LB	C-55
YA34LNT12	C-26
YA34LNT38	C-26
YA34L-TC12-FX	C-50
YA34L-TC38-FX	C-50
YA34L-TC516-FX	C-50
YA34L-TC58-FX	C-50
YA34N	C-29
YA34-TC12-FXB	C-59
YA35	C-29
YA35-2L	C-37
YA35-2LN	C-37
YA352N	C-42
YA35L	C-23
YA35N	C-29
YA36	C-29
YA36-2LN	C-37
YA362N	C-42
YA362NFXB	C-70
YA362NU	C-19
YA362TC38	C-42
YA36A1	C-144
YA36A3	C-146
YA36A3N131TD12E	C-108
YA36A3N131TD38E	C-108
YA36A5	C-146
YA36A9N131TD12E	C-108
YA36L	C-23
YA36L11	C-23
YA36L2ENT38E10FX	C-64
YA36L2NNT	C-39
YA36L2NT38FX	C-64
YA36-L2NTC-FX	C-62
YA36L-2TC38	C-37
YA36-L2TC38-FX	C-62
YA36-LB	C-55
YA36LNT12	C-26
YA36LNT38	C-26
YA36L-TC12-FX	C-50
YA36L-TC58-FX	C-50
YA36LTC78	C-23
YA36N	C-29
YA36-TC12-FXB	C-59
YA36-TC58-FXB	C-59
YA37	C-30
YA37-2L	C-37
YA37-2LN	C-37
YA372N	C-42
YA37L	C-24
YA37L1	C-24
YA37N	C-30
YA38	C-30
YA382-FXBG2	C-70
YA382-FXBG3	C-70
YA38-2L	C-37
YA38-2LN	C-37
YA382N	C-42
YA382N-FXB	C-70
YA382TC38	C-42
YA382TC38-FXB	C-70
YA38L	C-24
YA38L2ENT38FX	C-64
YA38L2NNTFX	C-64
YA38L2NT38FX	C-64
YA38-L2NTC-FX	C-62
YA38L-2TC12	C-37
YA38-L2TC12-FX	C-62
YA38L-2TC38	C-37
YA38-L2TC38-FX	C-62
YA38-L2TC516-FX	C-62
YA38-LB	C-55
YA38LNT12FX	C-52
YA38LNTM20FX	C-52
YA38L-TC12-FX	C-50
YA38L-TC38-FX	C-50
YA38L-TC516-FX	C-50
YA38L-TC58-FX	C-50
YA38N	C-30
YA38-TC12-FXB	C-59
YA38-TC58-FXB	C-59
YA39	C-30
YA392ENNT	C-42
YA39-2L	C-37
YA39-2LN	C-37
YA392LNN131T12E	C-107
YA392N	C-42
YA392NT38	C-42
YA392NU	C-20
YA392TC38	C-42
YA39A1	C-144
YA39A1N131TD12E	C-108
YA39A3	C-144
YA39A34	C-144
YA39A5	C-146
YA39A5N131TD12E	C-108
YA39A7	C-146
YA39AM2	C-146
YA39L	C-24
YA39L2	C-24
YA39L2NT12E1	C-39
YA39L2NT38	C-39
YA39L2NT38E16	C-39
YA39-L2NTC-FX	C-62
YA39L-2TC12E3	C-37
YA39L-2TC38	C-37
YA39-L2TC38E10-FX	C-62
YA39L-2TC58	C-37
YA39L6	C-24
YA39L6N131T12E	C-107
YA39L9	C-24
YA39-LB	C-55
YA39LNT12	C-26
YA39LNT38	C-26
YA39LNT58	C-26
YA39N	C-30
YA3C	C-28
YA3C-2L	C-35
YA3C2N	C-40
YA3C2NU	C-18
YA3C2TC14	C-40
YA3C2TC14E2	C-40
YA3C2TC38	C-40
YA3C2TC38E2	C-40
YA3C2TC38-FXB	C-68
YA3C2TC38SL	C-81
YA3C2TC38SLBOX500	C-81
YA3C2TC516-FXB	C-68
YA3CL	C-22
YA3CL-2TC14	C-35
YA3CL-2TC38	C-35
YA3C-LB	C-55
YA3CLNT14	C-25
YA3CLNT516	C-25
YA3CN	C-28
YA3CTC14	C-28
YA3CTC38	C-28
YA40	C-30
YA40-2L	C-37
YA40-2LN	C-37
YA402N	C-42
YA402N-FXB	C-70
YA402NU	C-20
YA40A1	C-144
YA40A3	C-146
YA40L	C-24
YA40L2NNTFX	C-64
YA40-L2NTC-FX	C-62
YA40L-2TC38	C-37
YA40-L2TC38-FX	C-62
YA40-LB	C-55
YA40LENT12FX	C-52
YA40L-TC12-FX	C-50
YA40L-TC38-FX	C-50
YA40L-TC516-FX	C-50
YA40L-TC58-FX	C-50
YA40-TC58-FXB	C-59
YA41	C-30
YA41-2L	C-37
YA412N	C-42
YA41L	C-24
YA41N	C-30
YA42A1	C-144
YA42A3	C-144
YA42A5	C-146
YA42A7	C-146
YA44	C-30
YA44-2L	C-37
YA44-2LN	C-37
YA442N	C-42
YA442N-FXB	C-70
YA442NU	C-20
YA442TC38	C-42
YA442TC38-FXB	C-70
YA444N	C-47
YA444NU	C-20
YA44A1	C-144
YA44A3	C-146
YA44L	C-24
YA44L2	C-24
YA44L23	C-24
YA44L2NNTFX	C-64
YA44L2NNTFXSL	C-80
YA44L2NT38FX	C-64
YA44L-2NTC12E24	C-39
YA44-L2NTC-FX	C-62
YA44L-2TC12	C-37
YA44-L2TC12E3-FX	C-62
YA44-L2TC12-FX	C-62
YA44-L2TC38-FX	C-62
YA44-L2TC58-FX	C-62
YA44-LB	C-55
YA44LNT12FX	C-52
YA44LNT38FX	C-52
YA44L-TC12-FX	C-50
YA44L-TC58-FX	C-50
YA44N	C-30
YA44-TC58-FXB	C-59
YA45	C-30
YA452N	C-42
YA452NU	C-20
YA4532N	C-42
YA453L	C-24
YA454N	C-47
YA454NU	C-20
YA45A5^^	C-146
YA45L	C-24
YA45L2NT38FX	C-64
YA46	C-30
YA462N	C-42
YA462N-FXB	C-70
YA462NU	C-20
YA464N	C-47
YA464NU	C-20
YA46A3	C-146
YA46A5	C-146
YA46L	C-24
YA46N	C-30
YA46-TC58-FXB	C-59
YA47	C-30
YA472N	C-42
YA472NU	C-20
YA474N	C-47
YA47N	C-30
YA48	C-30
YA482N	C-42
YA482NU	C-20
YA484N	C-47
YA4864N	C-47
YA48A3	C-146
YA48L	C-24
YA48N	C-30
YA4C	C-27
YA4C-2L	C-35
YA4C-2LN	C-35
YA4C2N	C-40
YA4C2NU	C-18
YA4C2TC14	C-40
YA4C2TC14E2	C-40
YA4C2TC38	C-40

ALPHA-NUMERIC INDEX BY CATALOG NUMBER (Continued)

Catalog Number	Page #
YA4CA1	C-143
YA4CA3	C-143
YA4CA6	C-143
YA4CL1-BOX	C-22
YA4CL-2TC14	C-35
YA4CL-2TC14E1	C-35
YA4CL-2TC14E2	C-35
YA4CL-2TC38	C-35
YA4CL-2TC516	C-35
YA4CL3-BOX	C-22
YA4CL4-BOX	C-22
YA4CL6-BOX	C-22
YA4C-LB	C-55
YA4CL-BOX	C-22
YA4CLNT10	C-25
YA4CN	C-28
YA4CTC10	C-27
YA4CTC38	C-28
YA5C	C-27
YA5C-2L	C-35
YA5C2N	C-40
YA5C2NU	C-18
YA5CL	C-21
YA5C-LB	C-55
YA5CN	C-27
YA5CTC14FXB	C-58
YA6C	C-27
YA6C-2L	C-34
YA6C-2L51	C-34
YA6C-2L52	C-34
YA6C-2LN	C-35
YA6C2N	C-40
YA6C2NU	C-18
YA6C2TC14	C-40
YA6C2TC14E1	C-40
YA6C2TC14E2	C-40
YA6C2TC38	C-40
YA6C2TC38E2	C-40
YA6C2TC38E6	C-40
YA6C2TC38SL	C-81
YA6C2TC38SLBOX500	C-81
YA6CA1	C-143
YA6CA3	C-143
YA6CL1-BOX	C-21
YA6CL-2TC10	C-34
YA6CL-2TC14	C-34
YA6CL-2TC14E	C-34
YA6CL-2TC14E1	C-34
YA6CL-2TC14E2	C-34
YA6CL2TC14E2SL	C-80
YA6CL-2TC38	C-35
YA6CL-2TC516	C-35
YA6CL-2TC516E2	C-35
YA6CL3-BOX	C-21
YA6CL4-BOX	C-21
YA6CL-6	C-21
YA6CL-BOX	C-21
YA6CLNT6	C-25
YA6CN	C-27
YA6CTC10	C-27
YA6CTC38	C-27
YA6CTC516	C-27
YA6CTC8	C-27
YA8C-2LN	C-34
YA8C2NU	C-18
YA8C2TC14	C-40
YA8C2TC14E2	C-40
YA8C2TC14E2-FXB	C-68
YA8C2TC38	C-40
YA8C2TC38-FXB	C-68
YA8CA1	C-143
YA8CA3	C-143
YA8CA3S56T14E	C-107
YA8CL1-BOX	C-21
YA8C-L1-BOX	C-48
YA8CL2-BOX	C-21
YA8C-L2-BOX	C-48
YA8C-L2TC10	C-34, C-60
YA8CL-2TC10E2	C-34
YA8C-L2TC14	C-34, C-60
YA8C-L2TC14E1	C-34, C-60
YA8C-L2TC14E2	C-34, C-60
YA8C-L2TC38	C-34, C-60
YA8CL3-BOX	C-21
YA8C-L3-BOX	C-48
YA8CL4-BOX	C-21
YA8C-L4-BOX	C-48
YA8C-LB	C-55
YA8CL-BOX	C-21, C-48
YA8CLNT6	C-25
YA8CLNT8	C-25
YA8CTC10	C-27
YA8CTC14	C-27
YA8C-TC14-FXB	C-58
YA8CTC38	C-27
YA-A-KIT1	C-147
YA-AKIT2	C-147
YA-AKIT3	C-147
YAB25-2LH70	H-41
YAB25-2LH71	H-41
YAB2C-2LH74	H-41
YAB2C2LH75	H-41
YAB344N	C-47
YAB364N	C-47
YAB394N	C-47
YAB4C-2LH72	H-41
YAC-CASE	N-90
YAC-FC	N-90
YAD10-10	B-5
YAD1010F	B-27
YAD10-14	B-5
YAD1014F	B-27
YAD10-14M	B-5
YAD10-38	B-5
YAD10-38M	B-5
YAD10-516	B-5
YAD10-516M	B-5
YAD10-6	B-5
YAD106F	B-27
YAD10-8	B-5
YAD108F	B-27
YAD10-8M	B-5
YAD14-10	B-5
YAD1410F	B-27
YAD14-10M	B-5
YAD14-14	B-5
YAD1414F	B-27
YAD14-14M	B-5
YAD14-38	B-5
YAD14-38M	B-5
YAD14-4	B-5
YAD14-516	B-5
YAD14-6	B-5
YAD146F	B-27
YAD14-6M	B-5
YAD14-8	B-5
YAD148F	B-27
YAD14-8M	B-5
YAD18-10	B-5
YAD1810F	B-27
YAD18-10M	B-5
YAD18-14	B-5
YAD1814F	B-27
YAD18-14M	B-5
YAD18-38	B-5
YAD18-4	B-5
YAD18-4M	B-5
YAD18-516	B-5
YAD18-6	B-5
YAD186F	B-27
YAD18-6M	B-5
YAD18-8	B-5
YAD188F	B-27
YAD18-8M	B-5
YAD1CM10E38	B-6
YAD1CM12E12	B-6
YAD1CM16E58	B-6
YAD1CM20E34	B-6
YAD1CM6E14	B-6
YAD1CM8E516	B-6
YAD25M10E38	B-6
YAD25M12E12	B-6
YAD25M16E58	B-6
YAD25M20E34	B-6
YAD25M6E14	B-6
YAD25M8E516	B-6
YAD26M10E38	B-7
YAD26M12E12	B-7
YAD26M16E58	B-7
YAD26M20E34	B-7
YAD26M6E14	B-7
YAD26M8E516	B-7
YAD27M10E38	B-7
YAD27M12E12	B-7
YAD27M16E58	B-7
YAD27M20E34	B-7
YAD27M8E516	B-7
YAD28M10E38	B-7
YAD28M12E12	B-7
YAD28M16E58	B-7
YAD28M20E34	B-7
YAD28M6E14	B-7
YAD28M8E516	B-7
YAD2CM10E38	B-6
YAD2CM12E12	B-6
YAD2CM16E58	B-6
YAD2CM20E34	B-6
YAD2CM6E14	B-6
YAD2CM8E516	B-6
YAD30M10E38	B-7
YAD30M12E12	B-7
YAD30M16E58	B-7
YAD30M20E34	B-7
YAD31M10E38	B-7
YAD31M12E12	B-7
YAD31M16E58	B-7
YAD31M20E34	B-7
YAD33M10E38	B-7
YAD33M12E12	B-7
YAD33M16E58	B-7
YAD33M20E34	B-7
YAD36M10E38	B-7
YAD36M12E12	B-7
YAD36M16E58	B-7
YAD36M20E34	B-7
YAD4CM10E38	B-6
YAD4CM12E12	B-6
YAD4CM16E58	B-6
YAD4CM20E34	B-6
YAD4CM5E10	B-6
YAD4CM6E14	B-6
YAD4CM8E516	B-6
YAD6CM10E38	B-6
YAD6CM12E12	B-6
YAD6CM5E10	B-6
YAD6CM6E14	B-6
YAD6CM8E516	B-6
YAD8CM10E38	B-6
YAD8CM12E12	B-6
YAD8CM16E58	B-6
YAD8CM4E8	B-6
YAD8CM5E10	B-6
YAD8CM6E14	B-6
YAD8CM8E516	B-6
YAE10N	B-11
YAE10N11	B-11
YAE10N110BFBOX	B-40
YAE10N110LFBOX	B-35
YAE10N111BFBOX	B-40
YAE10N111LFBOX	B-35
YAE10N112BFBOX	B-40
YAE10N112LFBOX	B-35
YAE10N11BOX	B-11
YAE10N11M	B-11
YAE10N2	B-11
YAE10N2BOX	B-11
YAE10N2M	B-11
YAE10N3	B-11
YAE10N3BOX	B-11
YAE10N3M	B-11
YAE10N4	B-11
YAE10N4BOX	B-11
YAE10N4M	B-11
YAE10N5	B-11
YAE10N5BOX	B-11
YAE10N5M	B-11
YAE10N79	B-11
YAE10N79BOX	B-11
YAE10N80FBOX	B-30
YAE10N81FBOX	B-30
YAE10N82FBOX	B-30
YAE10N83FBOX	B-30
YAE10NBOX	B-11
YAE10NM	B-11
YAE12N	B-11
YAE12N1	B-11
YAE12N1BOX	B-11
YAE12N1M	B-11
YAE12N2	B-11
YAE12N2BOX	B-11

ALPHA-NUMERIC INDEX BY CATALOG NUMBER (Continued)

Catalog Number	Page #
YAE12N2M	B-11
YAE12N7	B-11
YAE12N7BOX	B-11
YAE12N7M	B-11
YAE12N9	B-11
YAE12N9BOX	B-11
YAE12N9M	B-11
YAE12NBOX	B-11
YAE12NM	B-11
YAE12Z2	B-43
YAE12Z2BOX	B-43
YAE12Z3	B-43
YAE12Z3BOX	B-43
YAE12Z4	B-43
YAE12Z4BOX	B-43
YAE14N	B-11
YAE14N1	B-11
YAE14N107BFBOX	B-40
YAE14N107LFBOX	B-35
YAE14N108BFBOX	B-40
YAE14N108LFBOX	B-35
YAE14N109BFBOX	B-40
YAE14N109LFBOX	B-35
YAE14N1BOX	B-11
YAE14N1M	B-11
YAE14N2	B-11
YAE14N2BOX	B-11
YAE14N2M	B-11
YAE14N3	B-11
YAE14N3BOX	B-11
YAE14N3M	B-11
YAE14N4	B-11
YAE14N43	B-11
YAE14N43BOX	B-11
YAE14N43M	B-11
YAE14N4BOX	B-11
YAE14N4M	B-11
YAE14N76F	B-30
YAE14N76FBOX	B-30
YAE14N77F	B-30
YAE14N77FBOX	B-30
YAE14N77FM	B-30
YAE14N78F	B-30
YAE14N78FBOX	B-30
YAE14N78FM	B-30
YAE14NBOX	B-11
YAE14NM	B-11
YAE14Z2	B-43
YAE14Z2BOX	B-43
YAE14Z3	B-43
YAE14Z3BOX	B-43
YAE14Z4	B-43
YAE14Z4BOX	B-43
YAE18G43F	B-30
YAE18G43FBOX	B-30
YAE18G43FM	B-30
YAE18N	B-11
YAE18N104BFBOX	B-40
YAE18N104LFBOX	B-35
YAE18N105BFBOX	B-40
YAE18N105LFBOX	B-35
YAE18N106BFBOX	B-40
YAE18N106LFBOX	B-35
YAE18N15	B-11
YAE18N15BOX	B-11
YAE18N15M	B-11
YAE18N2	B-11
YAE18N21	B-11
YAE18N21BOX	B-11
YAE18N21M	B-11
YAE18N24	B-11
YAE18N24BOX	B-11
YAE18N24M	B-11
YAE18N26	B-11
YAE18N26BOX	B-11
YAE18N26M	B-11
YAE18N2BOX	B-11
YAE18N2M	B-11
YAE18N3	B-11
YAE18N3BOX	B-11
YAE18N3M	B-11
YAE18N56F	B-30
YAE18N56FBOX	B-30
YAE18N57F	B-30
YAE18N57FBOX	B-30
YAE18N57FM	B-30
YAE18N58FBOX	B-30
YAE18N60F	B-30
YAE18N60FBOX	B-30
YAE18N60FM	B-30
YAE18NBOX	B-11
YAE18NM	B-11
YAE18Z1	B-43
YAE18Z1BOX	B-43
YAE18Z2	B-43
YAE18Z2BOX	B-43
YAE18Z3	B-43
YAE18Z3BOX	B-43
YAE18Z4	B-43
YAE18Z4BOX	B-43
YAE22G12	B-10
YAE22G12BOX	B-10
YAE22G13	B-10
YAE22G13BOX	B-10
YAE22G13M	B-10
YAE22G14	B-10
YAE22G14BOX	B-10
YAE22G15	B-10
YAE22G15BOX	B-10
YAE22G16	B-10
YAE22G16BOX	B-10
YAE22G16M	B-10
YAE22G18	B-10
YAE22G18BOX	B-10
YAE22G18M	B-10
YAE22N65F	B-30
YAE22N65FBOX	B-30
YAE22N65FM	B-30
YAE22N66F	B-30
YAE22N66FBOX	B-30
YAE22N66FM	B-30
YAE22Z1	B-43
YAE22Z1BOX	B-43
YAE22Z2	B-43
YAE22Z2BOX	B-43
YAE22Z3	B-43
YAE22Z3BOX	B-43
YAEBAF1CNTN	C-12
YAEBAF1CNTNOEM	C-12
YAEBAF1CPTN	C-12
YAEBAF1CPTNOEM	C-12
YAEBAF25NTN	C-12
YAEBAF25NTNOEM	C-12
YAEBAF25PTN	C-12
YAEBAF25PTNOEM	C-12
YAEBAF26NTN	C-12
YAEBAF26NTNOEM	C-12
YAEBAF26PTN	C-12
YAEBAF26PTNOEM	C-12
YAEBAF27NTN	C-12
YAEBAF27NTNOEM	C-12
YAEBAF27PTN	C-12
YAEBAF27PTNOEM	C-12
YAEBAF28NTN	C-12
YAEBAF28NTNOEM	C-12
YAEBAF28PTN	C-12
YAEBAF28PTNOEM	C-12
YAEBAF2CNTN	C-12
YAEBAF2CNTNOEM	C-12
YAEBAF2CPTN	C-12
YAEBAF2CPTNOEM	C-12
YAEBAS1CNTN	C-11
YAEBAS1CNTNOEM	C-11
YAEBAS1CPTN	C-11
YAEBAS1CPTNOEM	C-11
YAEBAS25NTN	C-11
YAEBAS25NTNOEM	C-11
YAEBAS25PTN	C-11
YAEBAS25PTNOEM	C-11
YAEBAS26NTN	C-11
YAEBAS26NTNOEM	C-11
YAEBAS26PTN	C-11
YAEBAS26PTNOEM	C-11
YAEBAS27NTN	C-11
YAEBAS27NTNOEM	C-11
YAEBAS27PTN	C-11
YAEBAS27PTNOEM	C-11
YAEBAS28NTN	C-11
YAEBAS28NTNOEM	C-11
YAEBAS28PTN	C-11
YAEBAS28PTNOEM	C-11
YAEBAS2CNTN	C-11
YAEBAS2CNTNOEM	C-11
YAEBAS2CPTN	C-11
YAEBAS2CPTNOEM	C-11
YAEBAS4CNTN	C-11
YAEBAS4CNTNOEM	C-11
YAEBAS4CPTN	C-11
YAEBAS4CPTNOEM	C-11
YAEBAS6CNTN	C-11
YAEBAS6CNTNOEM	C-11
YAEBAS6CPTN	C-11
YAEBAS6CPTNOEM	C-11
YAES10K11	B-14
YAES10K11T1	B-14
YAES10K12	B-14
YAES10K13	B-14
YAES10K14	B-14
YAES10K56	B-14
YAES10K57	B-14
YAES10K58	B-14
YAES10N11	B-9
YAES10N11F	B-29
YAES10N12	B-9
YAES10N12F	B-29
YAES10N13	B-9
YAES10N14	B-9
YAES10N56	B-9
YAES10N56F	B-29
YAES10N57	B-9
YAES10N57F	B-29
YAES10N58	B-9
YAES14K10	B-14
YAES14K53	B-14
YAES14K54	B-14
YAES14K6	B-14
YAES14K7	B-14
YAES14K8	B-14
YAES14K9	B-14
YAES14N10	B-9
YAES14N52	B-9
YAES14N53	B-9
YAES14N53F	B-29
YAES14N54	B-9
YAES14N54F	B-29
YAES14N6	B-9
YAES14N6F	B-29
YAES14N7	B-9
YAES14N8	B-9
YAES14N8F	B-29
YAES14N9	B-9
YAES18K1	B-14
YAES18K2	B-14
YAES18K3	B-14
YAES18K4	B-14
YAES18K49	B-14
YAES18K5	B-14
YAES18K50	B-14
YAES18N1	B-9
YAES18N1F	B-29
YAES18N2	B-9
YAES18N3	B-9
YAES18N3F	B-29
YAES18N4	B-9
YAES18N48	B-9
YAES18N49	B-9
YAES18N49F	B-29
YAES18N5	B-9
YAES18N50	B-9
YAES18N50F	B-29
YAEV10	B-19
YAEV10BOX	B-19
YAEV10-L36	B-19
YAEV10-L36BOX	B-19
YAEV10-T11	B-19
YAEV10-T11BOX	B-19
YAEV10-T2	B-19
YAEV10-T2BOX	B-19
YAEV10-T3	B-19
YAEV10-T3BOX	B-19
YAEV10-T4	B-19
YAEV10-T4BOX	B-19
YAEV10-T7	B-19
YAEV10-T7BOX	B-19
YAEV14	B-19
YAEV14BOX	B-19
YAEV18	B-19
YAEV18BOX	B-19
YAEV1C-H	B-21
YAEV1C-H1	B-21

ALPHA-NUMERIC INDEX BY CATALOG NUMBER (Continued)

Catalog Number	Page #
YAEV1C-H2	B-21
YAEV1C-H3	B-21
YAEV1C-L	B-20
YAEV1C-L1	B-20
YAEV1C-L2	B-20
YAEV1C-L3	B-20
YAEV1C-RH	B-25
YAEV1C-RH2	B-25
YAEV1C-RS	B-24
YAEV1C-RS2	B-24
YAEV25-H	B-22
YAEV25-H1	B-22
YAEV25-H2	B-22
YAEV25-H3	B-22
YAEV25-H4	B-22
YAEV25-L	B-20
YAEV25-L1	B-20
YAEV25-L2	B-20
YAEV25-L3	B-20
YAEV25-L4	B-20
YAEV25-RH	B-25
YAEV25-RS	B-24
YAEV26-H	B-22
YAEV26-H1	B-22
YAEV26-H12	B-22
YAEV26-H2	B-22
YAEV26-H3	B-22
YAEV26-L	B-20
YAEV26-L1	B-20
YAEV26-L2	B-20
YAEV26-L3	B-20
YAEV26-RH	B-25
YAEV26-RS	B-24
YAEV2C-H	B-21
YAEV2C-H1	B-21
YAEV2C-H2	B-21
YAEV2C-H3	B-21
YAEV2C-H4	B-21
YAEV2C-L	B-20
YAEV2C-L1	B-20
YAEV2C-L2	B-20
YAEV2C-L3	B-20
YAEV2C-L4	B-20
YAEV2C-RH	B-25
YAEV2C-RH1	B-25
YAEV2C-RS	B-24
YAEV2C-RS1	B-24
YAEV4C-H	B-21
YAEV4C-H2	B-21
YAEV4C-H3	B-21
YAEV4C-H4	B-21
YAEV4C-H5	B-21
YAEV4C-L	B-20
YAEV4C-L2	B-20
YAEV4C-L3	B-20
YAEV4C-L4	B-20
YAEV4C-L5	B-20
YAEV4C-RH	B-25
YAEV4C-RH2	B-25
YAEV4C-RS	B-24
YAEV4C-RS2	B-24
YAEV6C-H	B-21
YAEV6C-H1	B-21
YAEV6C-H10	B-21
YAEV6C-H2	B-21
YAEV6C-H4	B-21
YAEV6C-L	B-20
YAEV6C-L1	B-20
YAEV6C-L10	B-20
YAEV6C-L2	B-20
YAEV6C-L4	B-20
YAEV6C-RH	B-25
YAEV6C-RH1	B-25
YAEV6C-RS	B-24
YAEV6C-RS1	B-24
YAEV8C-H	B-21
YAEV8C-H1	B-21
YAEV8C-H14	B-21
YAEV8C-H2	B-21
YAEV8C-H3	B-21
YAEV8C-H4	B-21
YAEV8C-L	B-20
YAEV8C-L1	B-20
YAEV8C-L14	B-20
YAEV8C-L14BOX	B-20
YAEV8C-L1BOX	B-20
YAEV8C-L2	B-20
YAEV8C-L2BOX	B-20
YAEV8C-L3	B-20
YAEV8C-L3BOX	B-20
YAEV8C-L4	B-20
YAEV8C-L4BOX	B-20
YAEV8C-LBOX	B-20
YAEV8C-RH	B-25
YAEV8C-RH1	B-25
YAEV8C-RS	B-24
YAEV8C-RS1	B-24
YAFW10HS	B-79
YAFW10N	B-78
YAFW10NG	B-79
YAFW10P	B-78
YAFW14HS	B-79
YAFW14N	B-78
YAFW14NG	B-79
YAFW14P	B-78
YAFW18HS	B-79
YAFW18N	B-78
YAFW18NG	B-79
YAFW18P	B-78
YAFX15CLKIT	C-17
YAG18TC516LD	C-73
YAG1CL-2NTC-LD	C-77
YAG1CL-2TC14E1-LD	C-77
YAG1CL-2TC14E2-LD	C-77
YAG1CL-2TC14-LD	C-77
YAG1CL-2TC38-LD	C-77
YAG1CL-2TC516-LD	C-77
YAG1CLTC10LD	C-73
YAG1CLTC12FX	C-53
YAG1CLTC12LD	C-73
YAG1CLTC14FX	C-53
YAG1CLTC14LD	C-73
YAG1CLTC38FX	C-53
YAG1CLTC38LD	C-73
YAG1CLTC516FX	C-53
YAG1CLTC516LD	C-73
YAG25L-2NTC-LD	C-77
YAG25L-2TC12E1-LD	C-77
YAG25L-2TC14E2-LD	C-77
YAG25L-2TC14-LD	C-77
YAG25L-2TC38-LD	C-77
YAG25L-2TC516E2-LD	C-77
YAG25L-2TC516-LD	C-77
YAG25LTC12FX	C-53
YAG25LTC12LD	C-74
YAG25LTC14FX	C-53
YAG25LTC14LD	C-74
YAG25LTC38FX	C-53
YAG25LTC38LD	C-74
YAG25LTC516FX	C-53
YAG25LTC516LD	C-74
YAG26L-2NTC-LD	C-77
YAG26L-2TC14E2-LD	C-77
YAG26L-2TC14-LD	C-77
YAG26L-2TC38-LD	C-77
YAG26L-2TC516-LD	C-77
YAG26LTC10LD	C-74
YAG26LTC12FX	C-53
YAG26LTC12LD	C-74
YAG26LTC14FX	C-53
YAG26LTC14LD	C-74
YAG26LTC34LD	C-74
YAG26LTC38FX	C-53
YAG26LTC38LD	C-74
YAG26LTC516FX	C-53
YAG26LTC516LD	C-74
YAG26LTC58LD	C-74
YAG27L-2NTC-LD	C-77
YAG27L-2TC14E2-LD	C-77
YAG27L-2TC14-LD	C-77
YAG27L-2TC38-LD	C-77
YAG27L-2TC516-LD	C-77
YAG27LTC10LD	C-74
YAG27LTC12FX	C-53
YAG27LTC12LD	C-74
YAG27LTC14FX	C-53
YAG27LTC14LD	C-74
YAG27LTC38FX	C-53
YAG27LTC38LD	C-74
YAG27LTC516FX	C-53
YAG27LTC516LD	C-74
YAG28L-2NT38-LD	C-77
YAG28L-2NTC-LD	C-77
YAG28L-2TC12E1-LD	C-77
YAG28L-2TC12-LD	C-77
YAG28L-2TC14E2-LD	C-77
YAG28L-2TC14-LD	C-77
YAG28L-2TC38-LD	C-77
YAG28L-2TC516-LD	C-77
YAG28LTC12FX	C-54
YAG28LTC12LD	C-74
YAG28LTC14FX	C-54
YAG28LTC14LD	C-74
YAG28LTC38FX	C-54
YAG28LTC38LD	C-74
YAG28LTC516FX	C-54
YAG28LTC516LD	C-74
YAG28LTC516N66LD	C-74
YAG28LTC58LD	C-74
YAG29L-2NT38-LD	C-77
YAG29L-2NTC-LD	C-77
YAG29L-2TC12E1-LD	C-77
YAG29L-2TC12-LD	C-77
YAG29L-2TC14E2-LD	C-77
YAG29L-2TC14-LD	C-77
YAG29L-2TC38-LD	C-77
YAG29L-2TC516-LD	C-77
YAG29LTC12FX	C-54
YAG29LTC12LD	C-74
YAG29LTC34LD	C-74
YAG29LTC38FX	C-54
YAG29LTC38LD	C-74
YAG29LTC516LD	C-74
YAG29LTC58FX	C-54
YAG2CL-2NTC-LD	C-76
YAG2CL-2TC14E1-LD	C-76
YAG2CL-2TC14E2-LD	C-76
YAG2CL-2TC14-LD	C-76
YAG2CL-2TC38-LD	C-76
YAG2CL-2TC516-LD	C-76
YAG2CLTC10LD	C-73
YAG2CLTC12FX	C-53
YAG2CLTC12LD	C-73
YAG2CLTC14FX	C-53
YAG2CLTC14LD	C-73
YAG2CLTC38FX	C-53
YAG2CLTC38LD	C-73
YAG2CLTC516FX	C-53
YAG2CLTC516LD	C-73
YAG30L-2NTC-LD	C-78
YAG30L-2TC12-LD	C-78
YAG30L-2TC38-LD	C-78
YAG30LTC12FX	C-54
YAG30LTC34LD	C-74
YAG30LTC38FX	C-54
YAG30LTC58FX	C-54
YAG30LTC58LD	C-74
YAG31L-2NTC38-LD	C-78
YAG31L-2NTC-LD	C-78
YAG31L-2TC12-LD	C-78
YAG31L-2TC38-LD	C-78
YAG31LNT12LD	C-74
YAG31LTC12FX	C-54
YAG31LTC12LD	C-74
YAG31LTC14FX	C-54
YAG31LTC14LD	C-74
YAG31LTC34LD	C-74
YAG31LTC38FX	C-54
YAG31LTC38LD	C-74
YAG31LTC516FX	C-54
YAG31LTC516LD	C-74
YAG31LTC58FX	C-54
YAG31LTC58LD	C-74
YAG32L-2NTC-LD	C-78
YAG32L-2TC38-LD	C-78
YAG32LTC12FX	C-54
YAG32LTC12LD	C-74
YAG32LTC38LD	C-74
YAG32LTC58FX	C-54
YAG32LTC58LD	C-74
YAG34L-2NT38-LD	C-78
YAG34L-2NTC-LD	C-78
YAG34L-2TC12-LD	C-78
YAG34L-2TC38-LD	C-78
YAG34L-2TC516-LD	C-78
YAG34LNT516N66LD	C-75
YAG34LTC12FX	C-54
YAG34LTC12LD	C-75
YAG34LTC38FX	C-54
YAG34LTC38LD	C-75

ALPHA-NUMERIC INDEX BY CATALOG NUMBER (Continued)

Catalog Number	Page #
YAG34LTC516FX	C-54
YAG34LTC516LD	C-75
YAG34LTC516N66LD	C-75
YAG34LTC58FX	C-54
YAG34LTC58LD	C-75
YAG36L-2NTC-LD	C-78
YAG36L-2TC38-LD	C-78
YAG36LTC12LD	C-75
YAG36LTC38FX	C-54
YAG36LTC58LD	C-75
YAG38L-2NT38-LD	C-78
YAG38L-2NTC-LD	C-78
YAG38L-2TC12-LD	C-78
YAG38L-2TC38-LD	C-78
YAG38L-2TC516-LD	C-78
YAG38LTC12FX	C-54
YAG38LTC12LD	C-75
YAG38LTC38FX	C-54
YAG38LTC38LD	C-75
YAG38LTC516FX	C-54
YAG38LTC516LD	C-75
YAG38LTC58LD	C-75
YAG39L-2NTC-LD	C-78
YAG40L-2NNT-LD	C-78
YAG40L-2NTC-LD	C-78
YAG40L-2TC38-LD	C-78
YAG40LTC12FX	C-54
YAG40LTC12LD	C-75
YAG40LTC14FX	C-54
YAG40LTC38FX	C-54
YAG40LTC38LD	C-75
YAG40LTC516FX	C-54
YAG40LTC516LD	C-75
YAG40LTC58LD	C-75
YAG44L-2NTC-LD	C-78
YAG44L-2TC12E3-LD	C-78
YAG44L-2TC12-LD	C-78
YAG44L-2TC38-LD	C-78
YAG44L-2TC58-LD	C-78
YAG44LTC12FX	C-54
YAG44LTC12LD	C-75
YAG44LTC38FX	C-54
YAG44LTC516FX	C-54
YAG44LTC58LD	C-75
YAG4CL-2NT10E1-LD	C-76
YAG4CL-2NT10-LD	C-76
YAG4CL-2NTC-LD	C-76
YAG4CL-2TC14E1-LD	C-76
YAG4CL-2TC14E2-LD	C-76
YAG4CL-2TC14-LD	C-76
YAG4CL-2TC38-LD	C-76
YAG4CL-2TC516-LD	C-76
YAG4CLNT10LD	C-73
YAG4CLTC10LD	C-73
YAG4CLTC12FX	C-53
YAG4CLTC12LD	C-73
YAG4CLTC14FX	C-53
YAG4CLTC14LD	C-73
YAG4CLTC38FX	C-53
YAG4CLTC38LD	C-73
YAG4CLTC516FX	C-53
YAG4CLTC516LD	C-73
YAG6CL-2NTC-LD	C-76
YAG6CL-2TC10E2-LD	C-76
YAG6CL-2TC10E4-LD	C-76
YAG6CL-2TC10E-LD	C-76
YAG6CL-2TC10-LD	C-76
YAG6CL-2TC14E1-LD	C-76
YAG6CL-2TC14E2-LD	C-76
YAG6CL-2TC14-LD	C-76
YAG6CL-2TC38-LD	C-76
YAG6CL-2TC516-LD	C-76
YAG6CLTC10LD	C-73
YAG6CLTC12FX	C-53
YAG6CLTC12LD	C-73
YAG6CLTC14FX	C-53
YAG6CLTC14LD	C-73
YAG6CLTC38FX	C-53
YAG6CLTC38LD	C-73
YAG6CLTC516FX	C-53
YAG6CLTC516LD	C-73
YAG8CL-2TC10-LD	C-76
YAG8CL-2TC14E1-LD	C-76
YAG8CL-2TC14E2-LD	C-76
YAG8CL-2TC14-LD	C-76
YAG8CL-2TC38-LD	C-76
YAG8CLTC10LD	C-73
YAG8CLTC12FX	C-53
YAG8CLTC12LD	C-73
YAG8CLTC14FX	C-53
YAG8CLTC14LD	C-73
YAG8CLTC38LD	C-73
YAG8CLTC516FX	C-53
YAG8CLTC516LD	C-73
YAGB25LTC12FX	C-13
YAGB25LTC12FXOEM	C-13
YAGB25LTC14FX	C-13
YAGB25LTC14FXOEM	C-13
YAGB25LTC38FX	C-13
YAGB25LTC38FXOEM	C-13
YAGB25LTC516FX	C-13
YAGB25LTC516FXOEM	C-13
YAGB26LTC12FX	C-13
YAGB26LTC12FXOEM	C-13
YAGB26LTC14FX	C-13
YAGB26LTC14FXOEM	C-13
YAGB26LTC38FX	C-13
YAGB26LTC38FXOEM	C-13
YAGB26LTC516FX	C-13
YAGB26LTC516FXOEM	C-13
YAGB28LTC12FX	C-13
YAGB28LTC12FXOEM	C-13
YAGB28LTC14FX	C-13
YAGB28LTC14FXOEM	C-13
YAGB28LTC38FX	C-13
YAGB28LTC38FXOEM	C-13
YAGB28LTC516FX	C-13
YAGB28LTC516FXOEM	C-13
YAGB2CLTC10FX	C-13
YAGB2CLTC10FXOEM	C-13
YAGB2CLTC12FX	C-13
YAGB2CLTC12FXOEM	C-13
YAGB2CLTC14FX	C-13
YAGB2CLTC14FXOEM	C-13
YAGB2CLTC38FX	C-13
YAGB2CLTC38FXOEM	C-13
YAGB2CLTC516FX	C-13
YAGB2CLTC516FXOEM	C-13
YAGB4CLTC10FX	C-13
YAGB4CLTC10FXOEM	C-13
YAGB4CLTC12FX	C-13
YAGB4CLTC12FXOEM	C-13
YAGB4CLTC14FX	C-13
YAGB4CLTC14FXOEM	C-13
YAGB4CLTC38FX	C-13
YAGB4CLTC38FXOEM	C-13
YAGB4CLTC516FX	C-13
YAGB4CLTC516FXOEM	C-13
YAGB6CLTC10FX	C-13
YAGB6CLTC10FXOEM	C-13
YAGB6CLTC12FX	C-13
YAGB6CLTC12FXOEM	C-13
YAGB6CLTC14FX	C-13
YAGB6CLTC14FXOEM	C-13
YAGB6CLTC38FX	C-13
YAGB6CLTC38FXOEM	C-13
YAGB6CLTC516FX	C-13
YAGB6CLTC516FXOEM	C-13
YAIT1210Y	B-75
YAIT1814B	B-75
YAIT2218R	B-75
YAK25A-2G1	H-77
YAK25A-2G2	H-77
YAK28A-2G1	H-77
YAK28A-2G2	H-77
YAK29A-2G1	H-77
YAK2CA2G1	H-77
YAK2CA2G2	H-77
YAK311A-2G1	H-77
YAK311A-2G2	H-77
YAK31A-2G1	H-77
YAK31A-2G2	H-77
YAK34A-2G1	H-77
YAK34A-2G2	H-77
YAK-361A-2G1	H-77
YAK-361A-2G2	H-77
YAK39A-2G1	H-77
YAK39A-2G2	H-77
YAK44A-2NG7	H-77
YAK44A-2NG8	H-77
YALB102M10	C-96
YALB102M12	C-96
YALB102M4	C-96
YALB102M5	C-96
YALB102M6	C-96
YALB102M8	C-96
YALB10M10	C-90
YALB10M12	C-90
YALB10M4	C-90
YALB10M5	C-90
YALB10M6	C-90
YALB10M8	C-90
YALB1202M10	C-97
YALB1202M12	C-97
YALB1202M14	C-97
YALB1202M16	C-97
YALB1202M20	C-97
YALB1202M8	C-97
YALB120F2M10	C-105
YALB120F2M12	C-105
YALB120F2M14	C-105
YALB120F2M16	C-105
YALB120F2M20	C-105
YALB120F2M8	C-105
YALB120FM10	C-101
YALB120FM12	C-101
YALB120FM14	C-101
YALB120FM16	C-101
YALB120FM20	C-101
YALB120FM8	C-101
YALB120M10	C-91
YALB120M12	C-91
YALB120M14	C-91
YALB120M16	C-91
YALB120M20	C-91
YALB120M8	C-91
YALB1502M10	C-97
YALB1502M12	C-97
YALB1502M14	C-97
YALB1502M16	C-97
YALB1502M20	C-97
YALB1502M8	C-97
YALB150F2M10	C-105
YALB150F2M12	C-105
YALB150F2M14	C-105
YALB150F2M16	C-105
YALB150F2M20	C-105
YALB150F2M8	C-105
YALB150FM10	C-101
YALB150FM12	C-101
YALB150FM14	C-101
YALB150FM16	C-101
YALB150FM20	C-101
YALB150FM8	C-101
YALB150M10	C-91
YALB150M12	C-91
YALB150M14	C-91
YALB150M16	C-91
YALB150M20	C-91
YALB150M8	C-91
YALB162M10	C-96
YALB162M12	C-96
YALB162M4	C-96
YALB162M5	C-96
YALB162M6	C-96
YALB162M8	C-96
YALB16M10	C-90
YALB16M12	C-90
YALB16M4	C-90
YALB16M5	C-90
YALB16M6	C-90
YALB16M8	C-90
YALB1852M10	C-97
YALB1852M12	C-97
YALB1852M14	C-97
YALB1852M16	C-97
YALB1852M20	C-97
YALB1852M8	C-97
YALB185F2M10	C-106
YALB185F2M12	C-106
YALB185F2M14	C-106
YALB185F2M16	C-106
YALB185F2M20	C-106
YALB185F2M8	C-106
YALB185FM10	C-102
YALB185FM12	C-102
YALB185FM14	C-102
YALB185FM16	C-102
YALB185FM20	C-102
YALB185FM8	C-102

ALPHA-NUMERIC INDEX BY CATALOG NUMBER (Continued)

Catalog Number	Page #
YALB185M10	C-91
YALB185M12	C-91
YALB185M14	C-91
YALB185M16	C-91
YALB185M20	C-91
YALB185M8	C-91
YALB2402M10	C-98
YALB2402M12	C-98
YALB2402M14	C-98
YALB2402M16	C-98
YALB2402M20	C-98
YALB240F2M10	C-106
YALB240F2M12	C-106
YALB240F2M14	C-106
YALB240F2M16	C-106
YALB240F2M20	C-106
YALB240FM10	C-102
YALB240FM12	C-102
YALB240FM14	C-102
YALB240FM16	C-102
YALB240FM20	C-102
YALB240M10	C-92
YALB240M12	C-92
YALB240M14	C-92
YALB240M16	C-92
YALB240M20	C-92
YALB252M10	C-96
YALB252M12	C-96
YALB252M5	C-96
YALB252M6	C-96
YALB252M8	C-96
YALB25M10	C-90
YALB25M12	C-90
YALB25M5	C-90
YALB25M6	C-90
YALB25M8	C-90
YALB3002M10	C-98
YALB3002M12	C-98
YALB3002M14	C-98
YALB3002M16	C-98
YALB3002M20	C-98
YALB300F2M10	C-106
YALB300F2M12	C-106
YALB300F2M14	C-106
YALB300F2M16	C-106
YALB300F2M20	C-106
YALB300FM10	C-102
YALB300FM12	C-102
YALB300FM14	C-102
YALB300FM16	C-102
YALB300FM20	C-102
YALB300M10	C-92
YALB300M12	C-92
YALB300M14	C-92
YALB300M16	C-92
YALB300M20	C-92
YALB352M10	C-96
YALB352M12	C-96
YALB352M5	C-96
YALB352M6	C-96
YALB352M8	C-96
YALB35M10	C-90
YALB35M12	C-90
YALB35M5	C-90
YALB35M6	C-90
YALB35M8	C-90
YALB4002M12	C-98
YALB4002M14	C-98
YALB4002M16	C-98
YALB4002M20	C-98
YALB400F2M12	C-106
YALB400F2M14	C-106
YALB400F2M16	C-106
YALB400F2M20	C-106
YALB400FM12	C-102
YALB400FM14	C-102
YALB400FM16	C-102
YALB400FM20	C-102
YALB400M12	C-92
YALB400M14	C-92
YALB400M16	C-92
YALB400M20	C-92
YALB5002M12	C-98
YALB5002M16	C-98
YALB5002M20	C-98
YALB500F2M12	C-106
YALB500F2M16	C-106
YALB500F2M20	C-106
YALB500FM12	C-102
YALB500FM16	C-102
YALB500FM20	C-102
YALB500M12	C-92
YALB500M16	C-92
YALB500M20	C-92
YALB502M10	C-96
YALB502M12	C-96
YALB502M14	C-96
YALB502M16	C-96
YALB502M6	C-96
YALB502M8	C-96
YALB50F2M10	C-105
YALB50F2M12	C-105
YALB50F2M14	C-105
YALB50F2M16	C-105
YALB50F2M6	C-105
YALB50F2M8	C-105
YALB50FM10	C-101
YALB50FM12	C-101
YALB50FM14	C-101
YALB50FM16	C-101
YALB50FM6	C-101
YALB50FM8	C-101
YALB50M10	C-90
YALB50M12	C-90
YALB50M14	C-90
YALB50M16	C-90
YALB50M6	C-90
YALB50M8	C-90
YALB6302M12	C-98
YALB6302M16	C-98
YALB6302M20	C-98
YALB630F2M12	C-106
YALB630F2M16	C-106
YALB630F2M20	C-106
YALB630FM12	C-102
YALB630FM16	C-102
YALB630FM20	C-102
YALB630M12	C-92
YALB630M16	C-92
YALB630M20	C-92
YALB702M10	C-97
YALB702M12	C-97
YALB702M14	C-97
YALB702M16	C-97
YALB702M6	C-97
YALB702M8	C-97
YALB70F2M10	C-105
YALB70F2M12	C-105
YALB70F2M14	C-105
YALB70F2M16	C-105
YALB70F2M6	C-105
YALB70F2M8	C-105
YALB70FM10	C-101
YALB70FM12	C-101
YALB70FM14	C-101
YALB70FM16	C-101
YALB70FM6	C-101
YALB70FM8	C-101
YALB70M10	C-91
YALB70M12	C-91
YALB70M14	C-91
YALB70M16	C-91
YALB70M6	C-91
YALB70M8	C-91
YALB952M10	C-97
YALB952M12	C-97
YALB952M14	C-97
YALB952M16	C-97
YALB952M20	C-97
YALB952M8	C-97
YALB95F2M10	C-105
YALB95F2M12	C-105
YALB95F2M14	C-105
YALB95F2M16	C-105
YALB95F2M20	C-105
YALB95F2M8	C-105
YALB95FM10	C-101
YALB95FM12	C-101
YALB95FM14	C-101
YALB95FM16	C-101
YALB95FM20	C-101
YALB95FM8	C-101
YALB95M10	C-91
YALB95M12	C-91
YALB95M14	C-91
YALB95M16	C-91
YALB95M20	C-91
YALB95M8	C-91
YASG6CL-2TC14E2-FX	C-79
YASV6CL-2TC14E2-FX	C-79
YASV6CL-2TC14E2-FX-60	C-79
YATW10HS	B-77
YATW10N	B-76
YATW10NG	B-77
YATW10P	B-76
YATW14HS	B-77
YATW14N	B-76
YATW14NG	B-77
YATW14P	B-76
YATW18HS	B-77
YATW18N	B-76
YATW18NG	B-77
YATW18P	B-76
YAV0252M3	C-93
YAV0252M4	C-93
YAV0252M5	C-93
YAV0252M6	C-93
YAV0252M8	C-93
YAV025M3	C-87
YAV025M4	C-87
YAV025M5	C-87
YAV025M6	C-87
YAV025M8	C-87
YAV062M10	C-93
YAV062M4	C-93
YAV062M5	C-93
YAV062M6	C-93
YAV062M8	C-93
YAV06M10	C-87
YAV06M4	C-87
YAV06M5	C-87
YAV06M6	C-87
YAV06M8	C-87
YAV10	B-15
YAV102M10	C-93
YAV102M12	C-93
YAV102M4	C-93
YAV102M5	C-93
YAV102M6	C-93
YAV102M8	C-93
YAV10-2TC10	C-34
YAV102TC1090SL	C-83
YAV10-2TC14	C-34
YAV10-2TC14E1	C-34
YAV10-2TC14E2	C-34
YAV10-2TC38	C-34
YAV10BOX	B-15, C-21
YAV10-H25BOX	B-18
YAV10-H3BOX	B-18
YAV10-HBOX	B-18
YAV10-HF	B-45
YAV10-HFBOX	B-45
YAV10L36	B-15
YAV10-L36BOX	B-15
YAV10M10	C-87
YAV10M12	C-87
YAV10M4	C-87
YAV10M5	C-87
YAV10M6	C-87
YAV10M8	C-87
YAV10-R	B-23
YAV10-R3BOX	B-23, C-21
YAV10R-BOX	C-21
YAV10T11	B-15
YAV10-T11BOX	B-15
YAV10T2	B-15
YAV10T21F	B-44
YAV10-T21FBOX	B-44
YAV10T23F	B-44
YAV10-T23FBOX	B-44
YAV10-T2BOX	B-15, C-21
YAV10T3	B-15
YAV10-T3BOX	B-15, C-21
YAV10T4	B-15
YAV10-T4BOX	B-15, C-21
YAV10T7	B-15
YAV10-T7BOX	B-15
YAV1202M10	C-94
YAV1202M12	C-94
YAV1202M14	C-94

ALPHA-NUMERIC INDEX BY CATALOG NUMBER (Continued)

Catalog Number	Page #
YAV1202M16	C-94
YAV1202M20	C-94
YAV1202M8	C-94
YAV120F2M10	C-103
YAV120F2M12	C-103
YAV120F2M14	C-103
YAV120F2M16	C-103
YAV120F2M20	C-103
YAV120F2M8	C-103
YAV120FM10	C-99
YAV120FM12	C-99
YAV120FM14	C-99
YAV120FM16	C-99
YAV120FM20	C-99
YAV120FM8	C-99
YAV120M10	C-88
YAV120M12	C-88
YAV120M14	C-88
YAV120M16	C-88
YAV120M20	C-88
YAV120M8	C-88
YAV12G2	B-15
YAV12-G2BOX	B-15
YAV12G3	B-15
YAV12-G3BOX	B-15
YAV14	B-15
YAV14BOX	B-15
YAV14-H1BOX	B-18
YAV14-H2BOX	B-18
YAV14-H32F	B-45
YAV14-H32FBOX	B-45
YAV14-H34F	B-45
YAV14-H34FBOX	B-45
YAV14-H56F	B-45
YAV14-H56FBOX	B-45
YAV14-HBOX	B-18
YAV14-HF	B-45
YAV14-HFBOX	B-45
YAV14L33	B-15
YAV14-L33BOX	B-15
YAV14L36	B-15
YAV14-L36BOX	B-15
YAV14-R	B-23
YAV14-RL33	B-23
YAV14T1	B-15
YAV14-T1BOX	B-15
YAV14T2	B-15
YAV14-T2BOX	B-15
YAV14T3	B-15
YAV14T32F	B-44
YAV14-T32FBOX	B-44
YAV14T34F	B-44
YAV14-T34FBOX	B-44
YAV14-T3BOX	B-15
YAV14T5	B-15
YAV14-T5BOX	B-15
YAV14-Z5	B-45
YAV14-Z5BOX	B-45
YAV14-Z6	B-45
YAV14-Z6BOX	B-45
YAV1502M10	C-94
YAV1502M12	C-94
YAV1502M14	C-94
YAV1502M16	C-94
YAV1502M20	C-94
YAV1502M8	C-94
YAV150F2M10	C-103
YAV150F2M12	C-103
YAV150F2M14	C-103
YAV150F2M16	C-103
YAV150F2M20	C-103
YAV150F2M8	C-103
YAV150FM10	C-99
YAV150FM12	C-99
YAV150FM14	C-99
YAV150FM16	C-99
YAV150FM20	C-99
YAV150FM8	C-99
YAV150M10	C-88
YAV150M12	C-88
YAV150M14	C-88
YAV150M16	C-88
YAV150M20	C-88
YAV150M8	C-88
YAV162M10	C-93
YAV162M12	C-93
YAV162M4	C-93
YAV162M5	C-93
YAV162M6	C-93
YAV162M8	C-93
YAV16M10	C-87
YAV16M12	C-87
YAV16M4	C-87
YAV16M5	C-87
YAV16M6	C-87
YAV16M8	C-87
YAV18	B-15
YAV1852M10	C-94
YAV1852M12	C-94
YAV1852M14	C-94
YAV1852M16	C-94
YAV1852M20	C-94
YAV1852M8	C-94
YAV185F2M10	C-103
YAV185F2M12	C-103
YAV185F2M14	C-103
YAV185F2M16	C-103
YAV185F2M20	C-103
YAV185F2M8	C-103
YAV185FM10	C-100
YAV185FM12	C-100
YAV185FM14	C-100
YAV185FM16	C-100
YAV185FM20	C-100
YAV185FM8	C-100
YAV185M10	C-89
YAV185M12	C-89
YAV185M14	C-89
YAV185M16	C-89
YAV185M20	C-89
YAV185M8	C-89
YAV18BOX	B-15
YAV18-H19F	B-45
YAV18-H19FBOX	B-45
YAV18-H21F	B-45
YAV18-H21FBOX	B-45
YAV18-H6F	B-45
YAV18-H6FBOX	B-45
YAV18-HBOX	B-18
YAV18L33	B-15
YAV18-L33BOX	B-15
YAV18-R	B-23
YAV18T1	B-15
YAV18T19F	B-44
YAV18-T19FBOX	B-44
YAV18-T1BOX	B-15
YAV18T21F	B-44
YAV18-T21FBOX	B-44
YAV18T4	B-15
YAV18-T4BOX	B-15
YAV18T5	B-15
YAV18-T5BOX	B-15
YAV1C2N-FXB	C-69
YAV1C2TC38-FXB	C-69
YAV1C-L	B-17
YAV1C-L1	B-17
YAV1C-L1BOX	B-17
YAV1C-L2	B-17
YAV1C-L2BOX	B-17
YAV1CL2NT14FX	C-63
YAV1CL2NT516FX	C-63
YAV1C-L2NTC-FX	C-61
YAV1C-L2TC14E1-FX	C-61
YAV1C-L2TC14E2-FX	C-61
YAV1C-L2TC14-FX	C-61
YAV1C-L2TC38-FX	C-61
YAV1C-L2TC516-FX	C-61
YAV1C-L3	B-17
YAV1C-L3BOX	B-17
YAV1C-LBOX	B-17
YAV1CL-TC10-FX	C-49
YAV1CL-TC12-FX	C-49
YAV1CL-TC14-FX	C-49
YAV1CL-TC38-FX	C-49
YAV1CL-TC516-FX	C-49
YAV1C-RS1	B-23
YAV1C-RS2	B-23
YAV1C-TC10-FXB	C-58
YAV1C-TC516-FXB	C-58
YAV2402M10	C-94
YAV2402M12	C-94
YAV2402M14	C-94
YAV2402M16	C-94
YAV2402M20	C-94
YAV240F2M10	C-104
YAV240F2M12	C-104
YAV240F2M14	C-104
YAV240F2M16	C-104
YAV240F2M20	C-104
YAV240FM10	C-100
YAV240FM12	C-100
YAV240FM14	C-100
YAV240FM16	C-100
YAV240FM20	C-100
YAV240M10	C-89
YAV240M12	C-89
YAV240M14	C-89
YAV240M16	C-89
YAV240M20	C-89
YAV252M10	C-93
YAV252M12	C-93
YAV252M5	C-93
YAV252M6	C-93
YAV252M8	C-93
YAV252TC14E2-FXB	C-69
YAV252TC14-FXB	C-69
YAV252TC38-FXB	C-69
YAV25-L	B-17
YAV25-L1	B-17
YAV25-L1BOX	B-17
YAV25-L2	B-17
YAV25-L2BOX	B-17
YAV25L2NT14E1FX	C-63
YAV25L2NT14FX	C-63
YAV25L2NT516FX	C-63
YAV25-L2NTC-FX	C-61
YAV25-L2TC12E1-FX	C-61
YAV25-L2TC14E2-FX	C-61
YAV25-L2TC14-FX	C-61
YAV25-L2TC38-FX	C-61
YAV25-L2TC516E2-FX	C-61
YAV25-L2TC516-FX	C-61
YAV25-L3	B-17
YAV25-L3BOX	B-17
YAV25-L4	B-17
YAV25-L4BOX	B-17
YAV25L4TC14FXG1	C-85
YAV25-LBOX	B-17
YAV25LNT14FX	C-51
YAV25LNT38FX	C-51
YAV25LNT516FX	C-51
YAV25L-TC12-FX	C-49
YAV25L-TC14-FX	C-49
YAV25L-TC38-FX	C-49
YAV25L-TC516-FX	C-49
YAV25M10	C-87
YAV25M12	C-87
YAV25M5	C-87
YAV25M6	C-87
YAV25M8	C-87
YAV25-RS	B-23
YAV25-RS3	B-23
YAV25-TC10-FXB	C-59
YAV25-TC12-FXB	C-59
YAV25-TC38-FXB	C-59
YAV25-TC516-FXB	C-59
YAV262N-FXB	C-69
YAV262NTC38-FXB	C-69
YAV262TC14E2-FXB	C-69
YAV262TC14-FXB	C-69
YAV262TC38-FXB	C-69
YAV26-L	B-17
YAV26-L1	B-17
YAV26-L12	B-17
YAV26-L12BOX	B-17
YAV26-L1BOX	B-17
YAV26-L2	B-17
YAV26-L2BOX	B-17
YAV26L2NT14FX	C-63
YAV26L2NT38FX	C-63
YAV26L2NT516FX	C-63
YAV26-L2NTC-FX	C-61
YAV26-L2TC12E1-FX	C-61
YAV26-L2TC14E2-FX	C-61
YAV26-L2TC14-FX	C-61
YAV26-L2TC38E10-FX	C-61
YAV26-L2TC38-FX	C-61
YAV26-L2TC516-FX	C-61
YAV26-L3	B-17
YAV26-L3BOX	B-17

ALPHA-NUMERIC INDEX BY CATALOG NUMBER (Continued)

Catalog Number	Page #
YAV26L4TC14FXG1	C-85
YAV26-LBOX	B-17
YAV26LNT12FX	C-51
YAV26LNT38FX	C-51
YAV26LNT516FX	C-51
YAV26L-TC10-FX	C-49
YAV26L-TC12-FX	C-49
YAV26L-TC14-FX	C-49
YAV26L-TC34-FX	C-49
YAV26L-TC38-FX	C-49
YAV26L-TC516-FX	C-49
YAV26L-TC58-FX	C-49
YAV26-RS	B-23
YAV26-RS3	B-23
YAV26-TC12-FXB	C-59
YAV26-TC38-FXB	C-59
YAV272N-FXB	C-69
YAV272TC14E2-FXB	C-69
YAV272TC38-FXB	C-69
YAV27-L	B-17
YAV27-L1	B-17
YAV27-L15	B-17
YAV27-L15BOX	B-17
YAV27-L1BOX	B-17
YAV27-L2NTC-FX	C-61
YAV27-L2TC14-FX	C-61
YAV27-L2TC38-FX	C-61
YAV27L4TC14FXG1	C-85
YAV27-LBOX	B-17
YAV27LNT12FX	C-51
YAV27L-TC10-FX	C-49
YAV27L-TC12-FX	C-49
YAV27L-TC14-FX	C-49
YAV27L-TC38-FX	C-49
YAV27L-TC516-FX	C-49
YAV27-RS	B-23
YAV27-TC12-FXB	C-59
YAV282N-FXB	C-69
YAV282NT38-FXB	C-69
YAV282NTC38-FXB	C-69
YAV282TC14E2-FXB	C-69
YAV282TC38-FXB	C-69
YAV28-L	B-17
YAV28-L12	B-17
YAV28-L12BOX	B-17
YAV28-L13	B-17
YAV28-L13BOX	B-17
YAV28-L14	B-17
YAV28-L14BOX	B-17
YAV28L2ENT14FX	C-63
YAV28L2NT38FX	C-63
YAV28-L2NTC-FX	C-61
YAV28-L2TC12E1-FX	C-61
YAV28-L2TC12-FX	C-61
YAV28-L2TC14E2-FX	C-61
YAV28-L2TC14-FX	C-61
YAV28-L2TC38-FX	C-61
YAV28-L2TC516-FX	C-61
YAV28L4TC14FXG1	C-85
YAV28-LBOX	B-17
YAV28LNT12FX	C-51
YAV28LNT38FX	C-51
YAV28LNT516FX	C-51
YAV28L-TC12-FX	C-49
YAV28L-TC14-FX	C-49
YAV28L-TC34-FX	C-49
YAV28L-TC38-FX	C-49
YAV28L-TC516-FX	C-49
YAV28L-TC58-FX	C-49
YAV28-RS	B-23
YAV28-TC12-FXB	C-59
YAV28-TC38-FXB	C-59
YAV292N-FXB	C-69
YAV292NT38-FXB	C-69
YAV292NTC38-FXB	C-69
YAV292TC14E2-FXB	C-69
YAV292TC38-FXB	C-69
YAV29L2NT38FX	C-64
YAV29-L2NTC-FX	C-61
YAV29-L2TC12E1-FX	C-61
YAV29-L2TC12-FX	C-61
YAV29-L2TC14E2-FX	C-61
YAV29-L2TC14-FX	C-61
YAV29-L2TC38-FX	C-61
YAV29-L2TC516-FX	C-61
YAV29L-TC12-FX	C-49
YAV29L-TC14-FX	C-49
YAV29L-TC34-FX	C-49
YAV29L-TC38-FX	C-49
YAV29L-TC516-FX	C-49
YAV29L-TC58-FX	C-49
YAV2C2N-FXB	C-68
YAV2C2TC14E1-FXB	C-68
YAV2C2TC14E2-FXB	C-68
YAV2C2TC14-FXB	C-68
YAV2C2TC38-FXB	C-68
YAV2C2TC516-FXB	C-68
YAV2C-L	B-16
YAV2C-L1	B-16
YAV2C-L1BOX	B-16
YAV2C-L2	B-16
YAV2C-L2BOX	B-16
YAV2CL2NT10FX	C-63
YAV2CL2NT14E1FX	C-63
YAV2CL2NT14FX	C-63
YAV2C-L2NTC-FX	C-60
YAV2C-L2TC14E1-FX	C-60
YAV2C-L2TC14E2-FX	C-60
YAV2C-L2TC14-FX	C-60
YAV2CL2TC14FXSL	C-80
YAV2C-L2TC38-FX	C-60
YAV2CL2TC38FXSL	C-80
YAV2C-L2TC516-FX	C-60
YAV2C-L4	B-16
YAV2C-L4BOX	B-16
YAV2CL4TC14FXG1	C-85
YAV2C-LBOX	B-16
YAV2CLNT14FX	C-51
YAV2CLNT516FX	C-51
YAV2CL-TC10-FX	C-48
YAV2CL-TC12-FX	C-48
YAV2CL-TC14-FX	C-48
YAV2CL-TC38-FX	C-48
YAV2CL-TC516-FX	C-48
YAV2C-RS	B-23
YAV2C-RS1	B-23
YAV2C-RS2	B-23
YAV2C-TC10-FXB	C-58
YAV2C-TC516-FXB	C-58
YAV3002M10	C-95
YAV3002M12	C-95
YAV3002M14	C-95
YAV3002M16	C-95
YAV3002M20	C-95
YAV300F2M10	C-104
YAV300F2M12	C-104
YAV300F2M14	C-104
YAV300F2M16	C-104
YAV300F2M20	C-104
YAV300FM10	C-100
YAV300FM12	C-100
YAV300FM14	C-100
YAV300FM16	C-100
YAV300FM20	C-100
YAV300M10	C-89
YAV300M12	C-89
YAV300M14	C-89
YAV300M16	C-89
YAV300M20	C-89
YAV352M10	C-93
YAV352M12	C-93
YAV352M5	C-93
YAV352M6	C-93
YAV352M8	C-93
YAV35M10	C-87
YAV35M12	C-87
YAV35M5	C-87
YAV35M6	C-87
YAV35M8	C-87
YAV3C2NFXB	C-68
YAV4002M12	C-95
YAV4002M14	C-95
YAV4002M16	C-95
YAV4002M20	C-95
YAV400F2M12	C-104
YAV400F2M14	C-104
YAV400F2M16	C-104
YAV400F2M20	C-104
YAV400FM12	C-100
YAV400FM14	C-100
YAV400FM16	C-100
YAV400FM20	C-100
YAV400M12	C-89
YAV400M14	C-89
YAV400M16	C-89
YAV400M20	C-89
YAV4C2N-FXB	C-68
YAV4C2TC14E2-FXB	C-68
YAV4C2TC14-FXB	C-68
YAV4C2TC38-FXB	C-68
YAV4C2TC516-FXB	C-68
YAV4C-L	B-16
YAV4C-L2	B-16
YAV4C-L2BOX	B-16
YAV4CL2NT10E1FX	C-63
YAV4CL2NT10FX	C-63
YAV4CL2NT14FX	C-63
YAV4C-L2NTC-FX	C-60
YAV4C-L2TC14E1-FX	C-60
YAV4C-L2TC14E2-FX	C-60
YAV4C-L2TC14-FX	C-60
YAV4CL2TC14FXSL	C-80
YAV4C-L2TC38-FX	C-60
YAV4CL2TC38FXSL	C-80
YAV4C-L2TC516-FX	C-60
YAV4C-L3	B-16
YAV4C-L3BOX	B-16
YAV4C-L4	B-16
YAV4C-L4BOX	B-16
YAV4C-L5	B-16
YAV4C-L5BOX	B-16
YAV4C-LBOX	B-16
YAV4CLNT10FX	C-51
YAV4CL-TC10-FX	C-48
YAV4CL-TC12-FX	C-48
YAV4CL-TC14-FX	C-48
YAV4CL-TC38-FX	C-48
YAV4CL-TC516-FX	C-48
YAV4C-RS	B-23
YAV4C-RS2	B-23
YAV4C-RS3	B-23
YAV4C-RS4	B-23
YAV4C-TC10-FXB	C-58
YAV4C-TC14-FXB	C-58
YAV4C-TC516-FXB	C-58
YAV5002M12	C-95
YAV5002M16	C-95
YAV5002M20	C-95
YAV500F2M12	C-104
YAV500F2M16	C-104
YAV500F2M20	C-104
YAV500FM12	C-100
YAV500FM16	C-100
YAV500FM20	C-100
YAV500M12	C-89
YAV500M16	C-89
YAV500M20	C-89
YAV502M10	C-93
YAV502M12	C-93
YAV502M14	C-93
YAV502M16	C-93
YAV502M6	C-93
YAV502M8	C-93
YAV50F2M10	C-103
YAV50F2M12	C-103
YAV50F2M14	C-103
YAV50F2M16	C-103
YAV50F2M6	C-103
YAV50F2M8	C-103
YAV50FM10	C-99
YAV50FM12	C-99
YAV50FM14	C-99
YAV50FM16	C-99
YAV50FM6	C-99
YAV50FM8	C-99
YAV50M10	C-88
YAV50M12	C-88
YAV50M14	C-88
YAV50M16	C-88
YAV50M6	C-88
YAV50M8	C-88
YAV6302M12	C-95
YAV6302M16	C-95
YAV6302M20	C-95
YAV630F2M12	C-104
YAV630F2M16	C-104
YAV630F2M20	C-104
YAV630FM12	C-100
YAV630FM16	C-100
YAV630FM20	C-100

ALPHA-NUMERIC INDEX BY CATALOG NUMBER (Continued)

Catalog Number	Page #
YAV630M12	C-89
YAV630M16	C-89
YAV630M20	C-89
YAV6C2N-FXB	C-68
YAV6C2TC14E2-FXB	C-68
YAV6C2TC14-FXB	C-68
YAV6C2TC38-FXB	C-68
YAV6C-L	B-16
YAV6C-L1	B-16
YAV6C-L10	B-16
YAV6C-L10BOX	B-16
YAV6C-L1BOX	B-16
YAV6C-L2	B-16
YAV6C-L2BOX	B-16
YAV6C-L2NTC-FX	C-60
YAV6C-L2TC10E2-FX	C-60
YAV6C-L2TC10E4-FX	C-60
YAV6C-L2TC10E9-FX	C-60
YAV6C-L2TC10-FX	C-60
YAV6CL2TC10FX90SL	C-80
YAV6C-L2TC14E1-FX	C-60
YAV6C-L2TC14E2-FX	C-60
YAV6C-L2TC14-FX	C-60
YAV6C-L2TC38-FX	C-60
YAV6C-L2TC516-FX	C-60
YAV6C-L4	B-16
YAV6C-L4BOX	B-16
YAV6C-LBOX	B-16
YAV6CL-TC10-FX	C-48
YAV6CL-TC12-FX	C-48
YAV6CL-TC14-FX	C-48
YAV6CL-TC34-FX	C-48
YAV6CL-TC38-FX	C-48
YAV6CL-TC516-FX	C-48
YAV6C-RS	B-23
YAV6C-RS1	B-23
YAV6C-RS2	B-23
YAV6C-RS4	B-23
YAV6C-TC10-FXB	C-58
YAV6C-TC14-FXB	C-58
YAV702M10	C-94
YAV702M12	C-94
YAV702M14	C-94
YAV702M16	C-94
YAV702M6	C-94
YAV702M8	C-94
YAV70F2M10	C-103
YAV70F2M12	C-103
YAV70F2M14	C-103
YAV70F2M16	C-103
YAV70F2M6	C-103
YAV70F2M8	C-103
YAV70FM10	C-99
YAV70FM12	C-99
YAV70FM14	C-99
YAV70FM16	C-99
YAV70FM6	C-99
YAV70FM8	C-99
YAV70M10	C-88
YAV70M12	C-88
YAV70M14	C-88
YAV70M16	C-88
YAV70M5	C-88
YAV70M6	C-88
YAV70M8	C-88
YAV8C-L	B-16
YAV8C-L1	B-16
YAV8C-L1BOX	B-16
YAV8C-L2	B-16
YAV8C-L2BOX	B-16
YAV8C-L3	B-16
YAV8C-L3BOX	B-16
YAV8C-L4	B-16
YAV8C-L4BOX	B-16
YAV8C-LBOX	B-16
YAV8C-RS	B-23
YAV8C-RS1	B-23
YAV8C-RS3	B-23
YAV952M10	C-94
YAV952M12	C-94
YAV952M14	C-94
YAV952M16	C-94
YAV952M20	C-94
YAV952M8	C-94
YAV95F2M10	C-103
YAV95F2M12	C-103
YAV95F2M14	C-103
YAV95F2M16	C-103
YAV95F2M20	C-103
YAV95F2M8	C-103
YAV95FM10	C-99
YAV95FM12	C-99
YAV95FM14	C-99
YAV95FM16	C-99
YAV95FM20	C-99
YAV95FM8	C-99
YAV95M10	C-88
YAV95M12	C-88
YAV95M14	C-88
YAV95M16	C-88
YAV95M20	C-88
YAV95M8	C-88
YAV9CL36	B-15
YAV9C-L36BOX	B-15
YAV9CT4	B-15
YAV9C-T4BOX	B-15
YAV9CT9	B-15
YAV9C-T9BOX	B-15
YAZ1C-2N	C-44
YAZ1C-2TC14	C-44
YAZ1C-2TC14E2	C-44
YAZ1C-2TC38	C-44
YAZ1CTC12	C-32
YAZ1CTC14	C-32
YAZ1CTC38	C-32
YAZ25-2N	C-45
YAZ25-2NTC38	C-45
YAZ25-2TC14	C-45
YAZ25-2TC14E1	C-45
YAZ25-2TC14E2	C-45
YAZ252TC14E3	C-45
YAZ25-2TC38	C-45
YAZ25-2TC516	C-45
YAZ25-2TC516E6	C-45
YAZ254TC38E1G1	C-86
YAZ254TCG1	C-86
YAZ25TC12	C-32
YAZ25TC14	C-32
YAZ25TC38	C-32
YAZ25TC516	C-32
YAZ26-2N	C-45
YAZ26-2TC14	C-45
YAZ262TC14E1	C-45
YAZ26-2TC14E2	C-45
YAZ26-2TC38	C-45
YAZ262TC38E16	C-45
YAZ264TC38E1G1	C-86
YAZ264TCG1	C-86
YAZ26TC12	C-32
YAZ26TC14	C-32
YAZ26TC38	C-32
YAZ27-2N	C-45
YAZ27-2TC14E2	C-45
YAZ27-2TC38	C-45
YAZ27TC12	C-32
YAZ27TC38	C-32
YAZ28-2N	C-45
YAZ28-2NTC38	C-45
YAZ28-2TC14E2	C-45
YAZ28-2TC38	C-45
YAZ284TCG1	C-86
YAZ28TC12	C-32
YAZ28TC38	C-32
YAZ29-2N	C-45
YAZ29-2TC38	C-45
YAZ294TCG1	C-86
YAZ29TC12	C-32
YAZ29TC38	C-32
YAZ2C-2N	C-44
YAZ2C-2NTC38	C-44
YAZ2C-2TC10E2	C-44
YAZ2C-2TC14	C-44
YAZ2C-2TC14E1	C-44
YAZ2C-2TC14E2	C-44
YAZ2C-2TC38	C-44
YAZ2C-2TC38E2	C-44
YAZ2C-2TC38E6	C-44
YAZ2C2TC38SL	C-82
YAZ2C2TC38SLBOX500	C-82
YAZ2C-2TC516E2	C-44
YAZ2C2TC516E7	C-44
YAZ2CTC12	C-32
YAZ2CTC14	C-32
YAZ2CTC38	C-32
YAZ30-2N	C-45
YAZ30-2TC38	C-45
YAZ302TC38FX	C-66
YAZ30TC12	C-32
YAZ30TC38	C-32
YAZ30TC38FX	C-57
YAZ31-2N	C-45
YAZ312NTCFX	C-67
YAZ31-2TC14E2	C-45
YAZ312TC14E2FX	C-67
YAZ31-2TC38	C-45
YAZ312TC38FX	C-67
YAZ314TCG1	C-86
YAZ31TC12	C-32
YAZ31TC38	C-32
YAZ31TC38FX	C-57
YAZ32-2N	C-45
YAZ32-2TC38	C-45
YAZ322TC38FX	C-67
YAZ32TC12	C-32
YAZ32TC38	C-32
YAZ32TC38FX	C-57
YAZ33-2N	C-46
YAZ33TC12	C-33
YAZ34-2N	C-46
YAZ342NT38FX	C-67, C-71
YAZ342NTCFX	C-67
YAZ34-2TC14E2	C-46
YAZ342TC14E2FX	C-67
YAZ34-2TC38	C-46
YAZ342TC38FX	C-67
YAZ34NT38FX	C-57
YAZ34TC12	C-33
YAZ34TC12FX	C-57
YAZ34TC38	C-33
YAZ34TC38FX	C-57
YAZ35-2N	C-46
YAZ35TC12	C-33
YAZ36-2N	C-46
YAZ36-2TC38	C-46
YAZ362TC38FX	C-67
YAZ36TC12	C-33
YAZ36TC38	C-33
YAZ36TC38FX	C-57
YAZ37-2N	C-46
YAZ37TC12	C-33
YAZ382ENT38FX	C-72
YAZ38-2N	C-46
YAZ382NNTFX	C-67, C-72
YAZ382NT38FX	C-67, C-72
YAZ382NTCFX	C-67
YAZ382TC38FX	C-67
YAZ38NT12FX	C-57
YAZ38NT38FX	C-57
YAZ38TC12	C-33
YAZ38TC12FX	C-57
YAZ38TC38FX	C-57
YAZ39-2N	C-46
YAZ39-2NNT	C-46
YAZ39-2NT38	C-46
YAZ39-2TC38	C-46
YAZ39NT12	C-33
YAZ39TC12	C-33
YAZ39TC38	C-33
YAZ3C-2N	C-44
YAZ3C-2TC14	C-44
YAZ3C-2TC14E2	C-44
YAZ3C-2TC38	C-44
YAZ3C-2TC38E2	C-44
YAZ3C2TC38SL	C-82
YAZ3C2TC38SLBOX500	C-82
YAZ3CTC12	C-32
YAZ3CTC14	C-32
YAZ3CTC38	C-32
YAZ40-2N	C-46
YAZ402NTCFX	C-67
YAZ40TC12	C-33
YAZ41-2N	C-46
YAZ41TC12	C-33
YAZ44-2N	C-46
YAZ442NT38FX	C-67, C-72
YAZ44-2TC38	C-46
YAZ44TC12	C-33
YAZ44TC38	C-33
YAZ45-2N	C-46
YAZ453-2N	C-46

ALPHA-NUMERIC INDEX BY CATALOG NUMBER (Continued)

Catalog Number	Page #
YAZ453TC12	C-33
YAZ45TC12	C-33
YAZ46-2N	C-46
YAZ46TC12	C-33
YAZ47-2N	C-46
YAZ47TC12	C-33
YAZ48-2N	C-46
YAZ48TC12	C-33
YAZ4C-2N	C-44
YAZ4C-2TC10-E2	C-44
YAZ4C-2TC14	C-44
YAZ4C-2TC14E2	C-44
YAZ4C-2TC38	C-44
YAZ4CTC12	C-31
YAZ4CTC14	C-31
YAZ4CTC38	C-31
YAZ5C-2N	C-43
YAZ5CTC12	C-31
YAZ6C-2N	C-43
YAZ6C-2TC10E2	C-43
YAZ6C-2TC14	C-43
YAZ6C-2TC14E1	C-43
YAZ6C-2TC14E2	C-43
YAZ6C-2TC38	C-43
YAZ6C2TC38E16	C-43
YAZ6C-2TC38E2	C-43
YAZ6C-2TC38E6	C-43
YAZ6C2TC38SL	C-82
YAZ6C2TC38SLBOX500	C-82
YAZ6CTC12	C-31
YAZ6CTC14	C-31
YAZ6CTC38	C-31
YAZ8C-2TC10	C-43
YAZ8C2TC1090SL	C-82
YAZ8C-2TC10E2	C-43
YAZ8C2TC10E2FX	C-65
YAZ8C2TC10FX	C-65
YAZ8C2TC10SL	C-82
YAZ8C-2TC14	C-43
YAZ8C-2TC14E1	C-43
YAZ8C2TC14E1FX	C-65
YAZ8C-2TC14E2	C-43
YAZ8C2TC14E2FX	C-65
YAZ8C2TC14FX	C-65
YAZ8C-2TC38	C-43
YAZ8C2TC38FX	C-65
YAZ8CTC10	C-31, C-56
YAZ8CTC14	C-31, C-56
YAZ8CTC38	C-31, C-56
YAZV10-2TC14	C-43
YAZV102TC14E1	C-65
YAZV10-2TC14E2	C-43
YAZV102TC14SL	C-83
YAZV10TC14	C-31
YAZV1C2TC14E1FX	C-66
YAZV1C2TC14E2FX	C-66
YAZV1C2TC14FX	C-66
YAZV1C2TC38FX	C-66
YAZV1C2TC516E6FX	C-66
YAZV1C2TC516FX	C-66
YAZV1CTC14FX	C-56
YAZV1CTC38FX	C-56
YAZV1CTC516FX	C-56
YAZV252NT14FX	C-71
YAZV252NTCFX	C-66
YAZV252TC14E2FX	C-66
YAZV252TC14FX	C-66
YAZV252TC14FXSL	C-84
YAZV252TC14FXSLBOX500	C-84
YAZV252TC38FX	C-66
YAZV252TC38FXSL	C-84
YAZV252TC38FXSLBOX500	C-84
YAZV25TC12FX	C-57
YAZV25TC14FX	C-57
YAZV25TC38FX	C-57
YAZV262NTCFX	C-66
YAZV262TC14E2FX	C-66
YAZV262TC14FX	C-66
YAZV262TC14FXSL	C-84
YAZV262TC14FXSLBOX500	C-84
YAZV262TC38E6FX	C-66
YAZV262TC38FX	C-66
YAZV262TC38FXSL	C-84
YAZV262TC38FXSLBOX500	C-84
YAZV26TC12FX	C-57
YAZV26TC14FX	C-57
YAZV26TC38FX	C-57
YAZV272TC14E2FX	C-66
YAZV272TC38FX	C-66
YAZV27TC38FX	C-57
YAZV282NT38FX	C-71
YAZV282NTCFX	C-66
YAZV282TC14E2FX	C-66
YAZV282TC14FXSL	C-84
YAZV282TC14FXSLBOX500	C-84
YAZV282TC38FX	C-66
YAZV282TC38FXSL	C-84
YAZV282TC38FXSLBOX500	C-84
YAZV28NT38FX	C-57
YAZV28TC12FX	C-57
YAZV28TC38FX	C-57
YAZV292NT516FX	C-66, C-71
YAZV29NT516FX	C-57
YAZV2C2NT14E2FX	C-71
YAZV2C2NTCFX	C-65
YAZV2C2TC14E2FX	C-65
YAZV2C2TC14FX	C-65
YAZV2C2TC14FXSL	C-84
YAZV2C2TC14FXSLBOX500	C-84
YAZV2C2TC38FX	C-65
YAZV2C2TC38FXSL	C-84
YAZV2C2TC38FXSLBOX500	C-84
YAZV2CTC12FX	C-56
YAZV2CTC14FX	C-56
YAZV2CTC38FX	C-56
YAZV4C2NT14E2FX	C-71
YAZV4C2TC14E2FX	C-65
YAZV4C2TC14FX	C-65
YAZV4C2TC14FXSL	C-83
YAZV4C2TC14FXSLBOX500	C-83
YAZV4C2TC38E2-FX	C-65
YAZV4C2TC38FX	C-65
YAZV4C2TC38FXSL	C-83
YAZV4C2TC38FXSLBOX500	C-83
YAZV4CTC14FX	C-56
YAZV4CTC38FX	C-56
YAZV6C2TC10E2FX	C-65
YAZV6C2TC10FX90SL	C-83
YAZV6C2TC14E1FX	C-65
YAZV6C2TC14E2FX	C-65
YAZV6C2TC14FX	C-65
YAZV6C2TC14FXSL	C-83
YAZV6C2TC14FXSLBOX500	C-83
YAZV6C2TC38E2FX	C-65
YAZV6C2TC38E6FX	C-65
YAZV6C2TC38FX	C-65
YAZV6C2TC38FXSL	C-83
YAZV6C2TC38FXSLBOX500	C-83
YAZV6CTC14FX	C-56
YAZV6CTC38FX	C-56
YBA15ALKIT	C-17
YBA25A	C-16
YBA26A	C-16
YBA27A	C-16
YBA28A	C-16
YBA29	C-14
YBA29A	C-16
YBA30A	C-16
YBA31A	C-16
YBA31FX	C-14
YBA32A	C-16
YBA32FX	C-14
YBA34A	C-16
YBA34FX	C-14
YBA36A	C-16
YBA36FX	C-15
YBA36FX58	C-15
YBA38FX	C-15
YBA39	C-15
YBA39A	C-16
YBA42A	C-16
YBA44A	C-16
YBA44FX	C-15
YBA44FX58	C-15
YBAFX15CLKIT	C-17
YBAV25FX14	C-14
YBAV26FX14	C-14
YBAV27FX14	C-14
YBAV28FX	C-14
YBM1C-L	B-26
YBM1C-L3	B-26
YBM25-L	B-26
YBM25-L1	B-26
YBM25-L2	B-26
YBM26-L	B-26
YBM28-1/4	B-26
YBM2C-L	B-26
YBM2C-L1	B-26
YBM2C-L2	B-26
YBM4C-L	B-26
YBM4C-L1	B-26
YBM4C-L2	B-26
YBM4C-L4	B-26
YBM6C-L	B-26
YBM6C-L2	B-26
YBM6C-L3	B-26
YBM6C-L9	B-26
YBM8C	B-26
YBM8C-T2	B-26
YBM8CT4	B-26
YC10C10	C-130, H-21
YC1L12	C-129
YC1U1	H-25
YC25A2	H-22
YC25A25	H-22
YC25A4	H-22
YC25L12	C-129
YC26A25	H-22
YC26A26	H-22
YC26C2	C-130, H-21
YC26C26	C-130, H-21
YC26L12	C-129
YC27L12	C-129
YC28A2	H-22
YC28A25	H-22
YC28A26	H-22
YC28A28	H-22
YC28C2	C-130, H-21
YC28C26	C-130, H-21
YC28C28	C-130, H-21
YC28U26	H-25
YC2A2	H-22
YC2A4	H-22
YC2C2	C-130, H-21
YC2C4	C-130, H-21
YC2L12	C-129
YC33R26	H-22
YC33R26U	H-25
YC3L12	C-129
YC4A4	H-22
YC4A6	H-22
YC4C4	C-130, H-21
YC4C6	C-130, H-21
YC4C8	C-130, H-21
YC4L12	C-129
YC4U1	H-25
YC6L12	C-129
YC8C8	C-130, H-21
YC8L12	C-129
YCA25-2N	H-73
YCA25R-2N	H-75
YCA25RL-2N	H-74
YCA26-2N	H-73
YCA26R-2N	H-75
YCA26RL-2N	H-74
YCA27-2N	H-73
YCA27R-2N	H-75
YCA27RL-2N	H-74
YCA28-2N	H-73
YCA28R-2N	H-75
YCA28RL-2N	H-74
YCA29-2N	H-73
YCA2R-2N	H-75
YCA2RL-2N	H-74
YCA30-2N	H-73
YCA30R-2N	H-75
YCA31-2N	H-73
YCA321R-2N	H-75
YCA321RL-2N	H-74
YCA32-2N	H-73
YCA33R-2N	H-75
YCA34-2N	H-73
YCA35R-2N	H-75
YCA361R-2N	H-75
YCA37R-2N	H-75
YCA391A-2N	H-76
YCA39-2N	H-73
YCA39R-2N	H-75
YCA43R-2N	H-76
YCA441A-4N	H-76

ALPHA-NUMERIC INDEX BY CATALOG NUMBER (Continued)

Catalog Number	Page #
YCA44A2NG2	H-76
YCA451A-4N	H-76
YCA45R-2N	H-76
YCA48R-4N	H-76
YCA4R-2N	H-75
YCA4RL-2N	H-74
YCAB28-4N	H-73
YCAB32-4N	H-73
YCAB34-4N	H-73
YCAB39-4N	H-73
YCAB44-4N	H-73
YCAK25R-4N	H-75
YCAK28A-2G1	H-78
YCAK28R-4N	H-75
YCAK29A-2G1	H-78
YCAK30R-4N	H-75
YCAK31A-2G1	H-78
YCAK31AG1	H-78
YCAK321R-4N	H-75
YCAK33R-4N	H-75
YCAK34A-2G3	H-78
YCAK35R-4N	H-75
YCAK361A-4N	H-75
YCAK361R-4N	H-75
YCAK36A-2G1	H-78
YCAK37R-4N	H-75
YCAK391A-4N	H-76
YCAK39A-2G2	H-78
YCAK39R-4N	H-75
YCAK43R-4N	H-76
YCAK44A-2G2	H-78
YCAK453R-4N	H-76
YCAK45R-4N	H-76
YCB1U1	H-38
YCB25R	H-37
YCB26R	H-37
YCB27R	H-37
YCB28R	H-37
YCB28U26	H-38
YCB2R	H-37
YCB321R	H-37
YCB33R	H-37
YCB33R26U	H-38
YCB35R	H-37
YCB361R	H-37
YCB38R26U	H-38
YCB4U1	H-38
YCHC29TC2	C-131
YCHC29TC29	C-131
YCHC2TC2	C-131
YCHC34TC2	C-131
YCHC34TC29	C-131
YCHC34TC34	C-131
YCHC39TC2	C-131
YCHC39TC31	C-131
YCHC39TC39	C-131
YCHC44TC44	C-131
YCHC8TC8	C-131
YCR25RG6	H-52
YCR2625	H-51
YCR26RG2	H-52
YCR26RG3	H-52
YCR2725	H-51
YCR27RG5	H-52
YCR27RG6	H-52
YCR2825	H-51
YCR28RG5	H-52
YCR28RG6	H-52
YCR28RG7	H-52
YCR28RG8	H-52
YCR291RG2	H-52
YCR291RG3	H-52
YCR291RG4	H-52
YCR291RG5	H-52
YCR30RG4	H-52
YCR30RG6	H-52
YCR30RG7	H-52
YCR32RG1	H-52
YCR32RG2	H-52
YCR32RG3	H-52
YCR32RG4	H-52
YCR32RG5	H-52
YCR32RG6	H-52
YCR32RG7	H-52
YCS25	H-53
YCS25R	H-48, H-49
YCS25RL	H-50
YCS26	H-53
YCS26A	H-51
YCS26R	H-49
YCS26RL	H-50
YCS27	H-53
YCS27R	H-49
YCS28	H-53
YCS28A	H-51
YCS28R	H-49
YCS28RL	H-50
YCS29	H-53
YCS2R	H-49
YCS30	H-53
YCS301A	H-51
YCS30R	H-49
YCS31	H-53
YCS311A	H-51
YCS32	H-53
YCS321R	H-49
YCS321RL	H-50
YCS331A	H-51
YCS33R	H-49
YCS34	H-53
YCS341RL	H-50
YCS351A	H-51
YCS35R	H-49
YCS361A	H-51
YCS361R	H-49
YCS37R	H-49
YCS39	H-53
YCS391A	H-51
YCS39R	H-49
YCS43R	H-49
YCS44	H-53
YCS453R	H-49
YCS45R	H-49
YCS4R	H-49
YCT2626	H-31
YCT2828	H-31
YCU25A	H-53
YCU25R	H-54
YCU26R	H-54
YCU27R	H-54
YCU28A	H-53
YCU28R	H-54
YCU291A	H-53
YCU2CA	H-53
YCU2R	H-54
YCU301A	H-53
YCU30R	H-54
YCU321R	H-54
YCU4R	H-54
YCU4RG1	H-54
YCUT129ACSR	N-81
YD28REP2	H-64
YDS011R	H-60
YDS011RP1	H-60
YDS021R	H-59
YDS021RE	H-64
YDS021REP1	H-64
YDS021RL	H-62
YDS021RLY	H-61
YDS021RP1	H-59
YDS1C	H-53, H-57
YDS1C-3	H-57
YDS1R	H-59
YDS1RP1	H-59
YDS1RP2	H-59
YDS1W	H-58
YDS25	H-57
YDS250E	H-64
YDS251R	H-60
YDS251RP1	H-60
YDS25AT	H-48, H-56, H-63
YDS25F	H-66
YDS25R	H-59
YDS25REP2	H-64
YDS25RL	H-62
YDS25RLY	H-61
YDS25RP1	H-59, H-64
YDS25RP2	H-59
YDS26	H-57
YDS261R	H-60
YDS261RP1	H-60
YDS26AT	H-56
YDS26F	H-66
YDS26R	H-59
YDS26RL	H-62
YDS26RLY	H-61
YDS26RP1	H-59, H-64
YDS26RP2	H-59
YDS27	H-57
YDS271R	H-60
YDS271RP1	H-60
YDS27AT	H-56, H-63
YDS27R	H-59
YDS27RE	H-64
YDS27RL	H-62
YDS27RLY	H-61
YDS27RP1	H-59, H-64
YDS27RP2	H-59, H-60, H-64
YDS28	H-57
YDS28AT	H-56, H-63
YDS28F	H-66
YDS28R	H-59
YDS28RE	H-64
YDS28RL	H-62
YDS28RLY	H-61
YDS28RP1	H-59, H-64
YDS28RP2	H-59
YDS29	H-57
YDS291AT	H-56
YDS291R	H-59
YDS291RP1	H-59
YDS29AT	H-56
YDS2C	H-53, H-57
YDS2C-3	H-57
YDS2CA	H-56, H-63
YDS2F	H-66
YDS2KT	H-66
YDS2RE	H-64
YDS2REP2	H-64
YDS2RL	H-62
YDS2RLY	H-61
YDS2W	H-53, H-58
YDS2WA	H-56
YDS30	H-57
YDS301AT	H-56
YDS30LT	H-63
YDS30R	H-59
YDS30RP1	H-59
YDS30RP2	H-59
YDS31	H-57
YDS311AT	H-56, H-63
YDS312E	H-64
YDS312H	H-64
YDS31AT	H-56
YDS32	H-57
YDS321R	H-59
YDS321RL	H-62
YDS321RLY	H-61
YDS321RP1	H-59
YDS326R	H-59
YDS32LT	H-63
YDS32R	H-59
YDS32RP2	H-59
YDS331AT	H-56, H-63
YDS33R	H-59
YDS33RP1	H-59
YDS34	H-57
YDS341RL	H-63
YDS34R	H-59
YDS34RP2	H-59, H-60
YDS351AT	H-56
YDS35R	H-59
YDS35RP1	H-59
YDS361AT	H-56
YDS361R	H-59, H-64
YDS361RL	H-55, H-63
YDS361RP1	H-59, H-64
YDS36LT	H-63
YDS36R	H-59
YDS36RP2	H-59, H-60
YDS375H	H-64
YDS37RP1	H-59
YDS39	H-57
YDS391AT	H-56
YDS392R	H-60
YDS39RP1	H-60
YDS3C-3	H-57
YDS3K10	H-65
YDS3K5	H-65
YDS3K6	H-65, H-66

ALPHA-NUMERIC INDEX BY CATALOG NUMBER (Continued)

Catalog Number	Page #
YDS3K7	H-65
YDS3K8	H-65
YDS3W	H-58
YDS40R	H-60
YDS41RP2	H-59, H-60
YDS42R	H-60
YDS431AT	H-56
YDS43R43RS	H-60
YDS43R45RS	H-60
YDS43RP1	H-60
YDS43RP2	H-60
YDS44	H-57
YDS44RP2	H-59, H-60
YDS451R34RS	H-60
YDS451R49RS	H-60
YDS451RP1	H-60
YDS45R45RS	H-60
YDS45RP1	H-60
YDS45RP2	H-60
YDS49R	H-60
YDS49RP1	H-60
YDS49RP2	H-60
YDS4C	H-53, H-57
YDS4CA	H-48, H-56
YDS4KT	H-66
YDS4RL	H-62
YDS4RLY	H-61
YDS4W	H-53, H-58
YDS4WA	H-48, H-56
YDS500H	H-64
YDS50R	H-60
YDS6C	H-53, H-57
YDS6CA	H-56
YDS6KT	H-66
YDS6W	H-53, H-58
YDS6WA	H-56
YDS6WK	H-65
YDS75	H-58
YDS76	H-58
YDS78	H-58
YDS7K5	H-65
YDS7K6	H-65
YDS7K7	H-65
YDS7M10T	H-66, I-45
YDS7M6T	H-66, I-45
YDS7M7T	H-66, I-45
YDS7M8T	H-66, I-45
YDS7M9T	H-66, I-45
YDS8KT	H-66
YDS8W	H-53, H-58
YDS8WG1	H-58
YDS8WK	H-65
YDSR25RL	H-55
YDSR26RL	H-55
YDSR27RL	H-55
YDSR28RL	H-55
YDSR2RL	H-55
YDSR321RL	H-55
YDSR341RL	H-55
YDSR4RL	H-55
YE1WAG1	H-42
YE25-LH97	H-42
YE25R-25	H-42
YE26-LH88	H-42
YE26-LH89	H-42
YE26R-60	H-42
YE27R-60	H-42
YE28-LH128	H-42
YE28R-60	H-42
YE29P31X109	C-141
YE29P41X82	C-141
YE29P46X92	C-140
YE29P50X100	C-139
YE2C-LH128	H-42
YE2C-LH129	H-42
YE2R-25	H-42
YE2WAG5	H-42
YE30P46X92	C-141
YE30P46X92FX	C-140
YE30P50X100	C-140
YE30P50X100FX	C-139
YE30P55X110	C-139
YE30R-60	H-42
YE31-LH96	H-42
YE31P41X82FX	C-141
YE31P50X100	C-141
YE31P51X102FX	C-139
YE31P55X110	C-140
YE31P59X118	C-139
YE32P51X102FX	C-140
YE32P55X110	C-141
YE32P55X110FX	C-139
YE32P59X118	C-140
YE32P63X126	C-139
YE32R-60	H-42
YE34-LH119	H-42
YE34-LH120	H-42
YE34P51X102FX	C-141
YE34P55X110FX	C-140
YE34P59X118	C-141
YE34P59X118FX	C-139
YE34P63X126	C-140
YE34P71X142	C-139
YE361R-60	H-42
YE36P59X118FX	C-140
YE36P63X126	C-141
YE36P67X134FX	C-139
YE36P71X142	C-140
YE36P78X156	C-139
YE38P59X118FX	C-141
YE38P67X134FX	C-140
YE38P71X142FX	C-139
YE39P71X142	C-141
YE39P78X156	C-140
YE39P87X174	C-139
YE39R-60	H-42
YE40P67X134FX	C-141
YE40P71X142FX	C-140
YE40P78X156FX	C-139
YE44P78X156FX	C-140
YE44P87X174FX	C-139
YE4R-25	H-42
YE6R-25	H-42
YEV1CP23X75FX	C-141
YEV1CP26X75FX	C-140
YEV1CP29X75FX	C-139
YEV25P26X75FX	C-141
YEV25P29X75FX	C-140
YEV25P33X75FX	C-139
YEV26P29X75FX	C-141
YEV26P33X75FX	C-140
YEV26P37X75FX	C-139
YEV27P33X75FX	C-141
YEV27P37X75FX	C-140
YEV27P41X82FX	C-139
YEV28P37X75FX	C-141
YEV28P41X75FX	C-140
YEV28P46X92FX	C-139
YEV2CP20X75FX	C-141
YEV2CP23X75FX	C-140
YEV2CP26X75FX	C-139
YEV4CP16X75FX	C-141
YEV4CP20X75FX	C-139
YF0112ID	B-88
YF0112IT	B-88
YF0112IW	B-88
YF0116ID	B-88
YF0116IT	B-88
YF0116IW	B-88
YF0120ID	B-88
YF0120IT	B-88
YF0120IW	B-88
YF0122ID	B-88
YF0122IT	B-88
YF0122IW	B-88
YF0122UI	B-86
YF0125ID	B-88
YF0125IT	B-88
YF0125IW	B-88
YF0125UI	B-86
YF0130ID	B-88
YF0130IT	B-88
YF0130IW	B-88
YF0132UI	B-86
YF0215UI	B-86
YF0216ID	B-88
YF0216IT	B-88
YF0216IW	B-88
YF0218ID	B-88
YF0218IT	B-88
YF0218IW	B-88
YF0220UI	B-86
YF0222ID	B-88
YF0222IT	B-88
YF0222IW	B-88
YF0225ID	B-88
YF0225IT	B-88
YF0225IW	B-88
YF0225UI	B-86
YF0232UI	B-86
YF0401TOOL	N-48
YF0412ID	B-88
YF0412IT	B-88
YF0412IW	B-88
YF0412UI	B-86
YF0415ID	B-88
YF0415IT	B-88
YF0415IW	B-88
YF0415UI	B-86
YF0416ID	B-88
YF0416IT	B-88
YF0416IW	B-88
YF0418ID	B-88
YF0418IT	B-88
YF0418IW	B-88
YF0418UI	B-86
YF0420UI	B-86
YF0422ID	B-88
YF0422IT	B-88
YF0422IW	B-88
YF0425ID	B-88
YF0425IT	B-88
YF0425IW	B-88
YF0425UI	B-86
YF0432UI	B-86
YF0612ID	B-88
YF0612IT	B-88
YF0612IW	B-88
YF0612UI	B-86
YF0615UI	B-86
YF0618ID	B-88
YF0618IT	B-88
YF0618IW	B-88
YF0618UI	B-86
YF0625UI	B-86
YF0801TOOL	N-48
YF0812ID	B-88
YF0812IT	B-88
YF0812IW	B-88
YF0812UI	B-86
YF0815ID	B-88
YF0815IT	B-88
YF0815IW	B-88
YF0815UI	B-86
YF0818ID	B-88
YF0818IT	B-88
YF0818IW	B-88
YF0818UI	B-86
YF1/03/0TOOL	N-48
YF1006TOOL	N-48
YF1010ID	B-88
YF1010IT	B-88
YF1010IW	B-88
YF1010UI	B-85
YF1012ID	B-88
YF1012IT	B-88
YF1012IW	B-88
YF1012UI	B-85
YF1015UI	B-85
YF1018ID	B-88
YF1018IT	B-88
YF1018IW	B-88
YF1018UI	B-85
YF1209ID	B-88
YF1209IT	B-88
YF1209IW	B-88
YF1209UI	B-85
YF1210ID	B-88
YF1210IT	B-88
YF1210IW	B-88
YF1212ID	B-88
YF1212IT	B-88
YF1212IW	B-88
YF1212UI	B-85
YF1215UI	B-85
YF1218ID	B-88
YF1218IT	B-88
YF1218IW	B-88
YF1218UI	B-85
YF1407UI	B-85

ALPHA-NUMERIC INDEX BY CATALOG NUMBER (Continued)

Catalog Number	Page #
YF1408ID	B-87
YF1408IT	B-87
YF1408IW	B-87
YF1408UI	B-85
YF1410ID	B-87
YF1410IT	B-87
YF1410IW	B-87
YF1410UI	B-85
YF1412ID	B-87
YF1412IT	B-87
YF1412IW	B-87
YF1412UI	B-85
YF1418ID	B-87
YF1418IT	B-87
YF1418IW	B-87
YF1418UI	B-85
YF1606ID	B-87
YF1606IT	B-87
YF1606IW	B-87
YF1607UI	B-85
YF1608ID	B-87
YF1608IT	B-87
YF1608IW	B-87
YF1608UI	B-85
YF1610ID	B-87
YF1610IT	B-87
YF1610IW	B-87
YF1610UI	B-85
YF1612ID	B-87
YF1612IT	B-87
YF1612IW	B-87
YF1612UI	B-85
YF1615ID	B-87
YF1615IT	B-87
YF1615IW	B-87
YF1618ID	B-87
YF1618IT	B-87
YF1618IW	B-87
YF1618UI	B-85
YF1806ID	B-87
YF1806IT	B-87
YF1806IW	B-87
YF1806UI	B-85
YF1808ID	B-87
YF1808IT	B-87
YF1808IW	B-87
YF1808UI	B-85
YF1810ID	B-87
YF1810IT	B-87
YF1810IW	B-87
YF1810UI	B-85
YF1812ID	B-87
YF1812IT	B-87
YF1812IW	B-87
YF1812UI	B-85
YF1818ID	B-87
YF1818IT	B-87
YF1818IW	B-87
YF2/020ID	B-88
YF2/022UI	B-86
YF2/025ID	B-88
YF2/025UI	B-86
YF2/027ID	B-88
YF2/032UI	B-86
YF2006IT	B-87
YF2006IW	B-87
YF2006UI	B-85
YF2008ID	B-87
YF2008IT	B-87
YF2008IW	B-87
YF2010ID	B-87
YF2010IT	B-87
YF2010IW	B-87
YF2010UI	B-85
YF2012ID	B-87
YF2012IT	B-87
YF2012IW	B-87
YF2012UI	B-85
YF2018ID	B-87
YF2018IT	B-87
YF2018IW	B-87
YF2205ID	B-87
YF2205IT	B-87
YF2205IW	B-87
YF2206ID	B-87
YF2206IT	B-87
YF2206IW	B-87
YF2206UI	B-85
YF2208ID	B-87
YF2208IT	B-87
YF2208IW	B-87
YF2208UI	B-85
YF22-10FL	N-47
YF2210ID	B-87
YF2210IT	B-87
YF2210IW	B-87
YF2210TOOL	N-48
YF2210UI	B-85
YF2212ID	B-87
YF2212IT	B-87
YF2212IW	B-87
YF2212UI	B-85
YF2214TOOL	N-48
YF2405UI	B-85
YF2406IT	B-87
YF2406IW	B-87
YF2407UI	B-85
YF2408IT	B-87
YF2408IW	B-87
YF25025ID	B-88
YF25027ID	B-88
YF25032ID	B-88
YF25032UI	B-86
YF25038ID	B-88
YF25040UI	B-86
YF2605UI	B-85
YF2606ID	B-87
YF2606IT	B-87
YF2606IW	B-87
YF2607UI	B-85
YF2608ID	B-87
YF2608IT	B-87
YF2608IW	B-87
YF2610TOOL	N-48
YF2806IT	B-87
YF2806IW	B-87
YF2807UI	B-85
YF2808IT	B-87
YF2808IW	B-87
YF3/025ID	B-88
YF3/025UI	B-86
YF3/030ID	B-88
YF3/030UI	B-86
YF3/032UI	B-86
YF3206TOOL	N-48
YF35032UI	B-86
YF35040UI	B-86
YF4/0250TOOL	N-48
YF4/027ID	B-88
YF4/030ID	B-88
YF4/032ID	B-88
YF4/032UI	B-86
YF4/034ID	B-88
YF4/034UI	B-86
YF4/040UI	B-86
YFA28CP-2	K-44
YFA28CPL2	K-45
YFA28CR2	K-44
YFA29CP-2	K-44
YFA29CPL2	K-45
YFA29CR2	K-44
YFA30CP-2	K-44
YFA30CPL2	K-45
YFA30CR2	K-44
YFA31CP-2	K-44
YFA31CPL2	K-45
YFA31CR2	K-44
YFA32CPL2	K-45
YFA32CR2	K-44
YFA34CP-2	K-44
YFA34CPL2	K-45
YFA34CR2	K-44
YFA39CP-2	K-44
YFA39CPL2	K-45
YFA39CR2	K-44
YFAP282	K-46
YFAP28L2	K-47
YFAP292	K-46
YFAP29L2	K-47
YFAP302	K-46
YFAP30L2	K-47
YFAP312	K-46
YFAP31L2	K-47
YFAP322	K-46
YFAP32L2	K-47
YFAP342	K-46
YFAP34L2	K-47
YFAP392	K-46
YFAP39L2	K-47
YFAR282	K-46
YFAR292	K-46
YFAR302	K-46
YFAR312	K-46
YFAR322	K-46
YFAR342	K-46
YFAR392	K-46
YFD-365	C-154
YFM28CP	K-48
YFM28CPL	K-48
YFM28CR	K-48
YFM29CP	K-48
YFM29CPL	K-48
YFM29CR	K-48
YFM30CP	K-48
YFM30CPL	K-48
YFM30CR	K-48
YFM31CP	K-48
YFM31CPL	K-48
YFM31CR	K-48
YFM32CP	K-48
YFM32CPL	K-48
YFM32CR	K-48
YFM34CP	K-48
YFM34CPL	K-48
YFM34CR	K-48
YFM39CP	K-48
YFM39CPL	K-48
YFM39CR	K-48
YFMP28	K-49
YFMP28L	K-49
YFMP29	K-49
YFMP29L	K-49
YFMP30	K-49
YFMP30L	K-49
YFMP31	K-49
YFMP31L	K-49
YFMP32	K-49
YFMP32L	K-49
YFMP34	K-49
YFMP34PL	K-49
YFMP39	K-49
YFMP39PL	K-49
YFMR28	K-49
YFMR29	K-49
YFMR30	K-49
YFMR31	K-49
YFMR32	K-49
YFMR34	K-49
YFMR39	K-49
YFN-540	C-154
YFO-140	C-154
YFR-865	C-154
YFS28CPL	K-42
YFS28CR	K-41
YFS29CP	K-41
YFS29CPL	K-42
YFS29CR	K-41
YFS30CP	K-41
YFS30CPL	K-42
YFS30CR	K-41
YFS31CP	K-41
YFS31CPL	K-42
YFS31CR	K-41
YFS32CP	K-41
YFS32CPL	K-42
YFS32CR	K-41
YFS34CP	K-41
YFS34CPL	K-42
YFS34CR	K-41
YFS39CP	K-41
YFS39CPL	K-42
YFS39CR	K-41
YFSP28	K-43
YFSP28L	K-43
YFSP29	K-43
YFSP29L	K-43
YFSP30	K-43
YFSP30L	K-43
YFSP31	K-43
YFSP31L	K-43

ALPHA-NUMERIC INDEX BY CATALOG NUMBER (Continued)

Catalog Number	Page #
YFSP32	K-43
YFSP32L	K-43
YFSP34	K-43
YFSP34L	K-43
YFSP39	K-43
YFSP39L	K-43
YFSR28	K-43
YFSR29	K-43
YFSR30	K-43
YFSR31	K-43
YFSR32	K-43
YFSR34	K-43
YFSR39	K-43
YFTW0614D	B-89
YFTW0614T	B-89
YFTW0614W	B-89
YFTW0814D	B-89
YFTW0814T	B-89
YFTW0814W	B-89
YFTW1014D	B-89
YFTW1014T	B-89
YFTW1014W	B-89
YFTW1212D	B-89
YFTW1212T	B-89
YFTW1212W	B-89
YFTW1410D	B-89
YFTW1410T	B-89
YFTW1410W	B-89
YFTW1413D	B-89
YFTW1413T	B-89
YFTW1413W	B-89
YFTW1608D	B-89
YFTW1608T	B-89
YFTW1608W	B-89
YFTW1612D	B-89
YFTW1612T	B-89
YFTW1612W	B-89
YFTW1808D	B-89
YFTW1808T	B-89
YFTW1808W	B-89
YFTW1810D	B-89
YFTW1810T	B-89
YFTW1810W	B-89
YFTW2008D	B-89
YFTW2008T	B-89
YFTW2008W	B-89
YFTW2010D	B-89
YFTW2010T	B-89
YFTW2010W	B-89
YFTW2208D	B-89
YFTW2208T	B-89
YFTW2208W	B-89
YG14B2TC2C2C	E-26
YG14B2TC2C6C	E-26
YG14BTC28	E-26
YGA25-2N	E-17
YGA26-2N	E-17
YGA28-2N	E-17
YGA29-2N	E-17
YGA2C-2N	E-17
YGA2C-2TC38	E-17
YGA34-2N	E-17
YGA6C-2N	E-17
YGA6C-2TC38E2G1	E-17
YGA6C-TC10	E-17
YGA6C-TC14	E-17
YGA6C-TC516	E-17
YGA8C-2N	E-17
YGA8C-TC10	E-17
YGA8C-TC14	E-17
YGA8C-TC516	E-17
YGC6C6	E-12
YGC6C8	E-12
YGC8C8	E-12
YGF29-2N	E-21
YGF29-4N	E-21
YGF34-2N	E-21
YGF34-4N	E-21
YGHA25-2N	E-16
YGHA26-2N	E-16
YGHA27-2N	E-16
YGHA28-2N	E-16
YGHA29-2N	E-16
YGHA2C-2N	E-16
YGHA31-2N	E-16
YGHA34-2N	E-16
YGHC26C2	E-11
YGHC26C26	E-11
YGHC29C26	E-11
YGHC29C29	E-11
YGHC2C2	E-11
YGHC34C26	E-11
YGHC34C29	E-11
YGHC34C34	E-11
YGHP29C2	E-9
YGHP29C26	E-9
YGHP29C29	E-9
YGHP29C6W6W	E-9
YGHP2C2	E-9
YGHP2C6W6W	E-9
YGHP34C2	E-9
YGHP34C26	E-9
YGHP34C29	E-9
YGHP34C34	E-9
YGHP58C2W-2	E-10
YGHP58C2W-2TN	E-10
YGHR26C100	E-14
YGHR26C12	E-14
YGHR26C34	E-14
YGHR26C58	E-14
YGHR29C100	E-14
YGHR29C12	E-14
YGHR29C34	E-14
YGHR29C58	E-14
YGHR34C100	E-14
YGHR34C34	E-14
YGHR34C58	E-14
YGHR58C2W-3	E-15
YGHS25	E-19
YGHS26	E-19
YGHS27	E-19
YGHS28	E-19
YGHS29	E-19
YGHS2C	E-19
YGHS31	E-19
YGHS34	E-19
YGIBS28-338-2N	E-23
YGIBS28-400-2N	E-23
YGIBS28-462-2N	E-23
YGIBS28-550-2N	E-23
YGIBS28-613-2N	E-23
YGIBS28-675-2N	E-23
YGIBS34-338-2N	E-23
YGIBS34-400-2N	E-23
YGIBS34-462-2N	E-23
YGIBS34-550-2N	E-23
YGIBS34-675-2N	E-23
YGIBW28-1000-2N	E-23
YGIBW28-338-2N	E-23
YGIBW28-400-2N	E-23
YGIBW28-462-2N	E-23
YGIBW28-550-2N	E-23
YGIBW28-613-2N	E-23
YGIBW28-675-2N	E-23
YGIBW28-750-2N	E-23
YGIBW34-338-2N	E-23
YGIBW34-400-2N	E-23
YGIBW34-462-2N	E-23
YGIBW34-550-2N	E-23
YGIBW34-613-2N	E-23
YGIBW34-675-2N	E-23
YGL29C2	E-7
YGL29C29	E-7
YGL2C2	E-7
YGL34C2	E-7
YGL34C29	E-7
YGL34C34	E-7
YGLR29C100	E-8
YGLR29C12	E-8
YGLR29C34	E-8
YGLR29C58	E-8
YGLR34C100	E-8
YGLR34C12	E-8
YGLR34C34	E-8
YGLR34C58	E-8
YGS25	E-20
YGS26	E-20
YGS28	E-20
YGS29	E-20
YGS2C	E-20
YGS34	E-20
YGS6C	E-20
YGS8C	E-20
YGT275	E-25
YH2929	C-132, C-134
YH2929WC	C-132, C-134
YH2929WCC	C-132, C-134
YH292C	C-132, C-134
YH292CWC	C-132, C-134
YH292CWCC	C-132, C-134
YH298C	C-132, C-134
YH298CWC	C-132, C-134
YH298CWCC	C-132, C-134
YH2C2C	C-132, C-134
YH2C2CWC	C-132, C-134
YH2C2CWCC	C-132, C-134
YH3429	C-132, C-134
YH3429WC	C-132, C-134
YH3429WCC	C-132, C-134
YH3434	C-132, C-134
YH3434WC	C-132, C-134
YH3434WCC	C-132, C-134
YH3931	C-132, C-134
YH3931WC	C-132, C-134
YH3931WCC	C-132, C-134
YH3939	C-132, C-134
YH3939WC	C-132, C-134
YH3939WCC	C-132, C-134
YH4429	C-132, C-134
YH4429WC	C-132, C-134
YH4429WCC	C-132, C-134
YH4434	C-132, C-134
YH4434WC	C-132, C-134
YH4434WCC	C-132, C-134
YH4444	C-132, C-134
YH4444WC	C-132, C-134
YH4444WCC	C-132, C-134
YH6C6C	C-132, C-134
YH6C6CWC	C-132, C-134
YH6C6CWCC	C-132, C-134
YH8C8C	C-132, C-134
YH8C8CWC	C-132, C-134
YH8C8CWCC	C-132, C-134
YHD200	H-38
YHD-200	H-28
YHD200J1444	H-39
YHD250	H-38
YHD-250	H-28
YHD250J1444	H-39
YHD-3	H-30
YHD300	H-38
YHD-300	H-28
YHD300J1496	H-39
YHD350	H-38
YHD-350	H-28
YHD350J1496	H-39
YHD-4	H-30
YHD-400	H-28
YHD-5	H-30
YHD-6	H-30
YHD-7	H-30
YHN-450	H-29
YHN500	H-38
YHN-500	H-29
YHN500J1496	H-39
YHN-525	H-29
YHN-550	H-29
YHN-600	H-29
YHO-1	H-30
YHO-10	H-30
YHO100	H-38
YHO-100	H-28
YHO100J1444	H-39
YHO125	H-30
YHO-125	H-28
YHO150	H-38
YHO-150	H-28
YHO150J1444	H-39
YHO-2	H-30
YHR-700	H-29
YHR-750	H-29
YHR-800	H-29
YHR-850	H-29
YHR-900	H-29
YHR-950	H-29
YHSA10K10	B-12
YHSA10K10BF	B-41
YHSA10K10F	B-31
YHSA10K10FRK	B-31
YHSA10K10LF	B-36

ALPHA-NUMERIC INDEX BY CATALOG NUMBER (Continued)

Catalog Number	Page #
YHSA10K10RK	B-12
YHSA10K12	B-12
YHSA10K12RK	B-12
YHSA10K14	B-12
YHSA10K14FRK	B-31
YHSA10K14RK	B-12
YHSA10K38	B-12
YHSA10K38RK	B-12
YHSA10K516	B-12
YHSA10K6	B-12
YHSA10K6BF	B-41
YHSA10K6F	B-31
YHSA10K6LF	B-36
YHSA10K8	B-12
YHSA10K8BF	B-41
YHSA10K8F	B-31
YHSA10K8FRK	B-31
YHSA10K8LF	B-36
YHSA14K10	B-12
YHSA14K10BF	B-41
YHSA14K10F	B-31
YHSA14K10FRK	B-31
YHSA14K10LF	B-36
YHSA14K10RK	B-12
YHSA14K14	B-12
YHSA14K14FRK	B-31
YHSA14K14RK	B-12
YHSA14K38	B-12
YHSA14K38RK	B-12
YHSA14K516	B-12
YHSA14K6	B-12
YHSA14K6BF	B-41
YHSA14K6F	B-31
YHSA14K6FRK	B-31
YHSA14K6LF	B-36
YHSA14K8	B-12
YHSA14K8BF	B-41
YHSA14K8F	B-31
YHSA14K8FRK	B-31
YHSA14K8LF	B-36
YHSA14K8RK	B-12
YHSA18K10	B-12
YHSA18K10BF	B-41
YHSA18K10F	B-31
YHSA18K10FRK	B-31
YHSA18K10LF	B-36
YHSA18K10RK	B-12
YHSA18K14	B-12
YHSA18K14RK	B-12
YHSA18K38	B-12
YHSA18K38RK	B-12
YHSA18K516	B-12
YHSA18K516RK	B-12
YHSA18K6	B-12
YHSA18K6BF	B-41
YHSA18K6F	B-31
YHSA18K6FRK	B-31
YHSA18K6LF	B-36
YHSA18K6RK	B-12
YHSA18K8	B-12
YHSA18K8BF	B-41
YHSA18K8F	B-31
YHSA18K8FRK	B-31
YHSA18K8LF	B-36
YHSA18K8RK	B-12
YHSFQ10F25X03	B-70
YHSFQ10F25X03RK	B-70
YHSFQ14F25X03	B-70
YHSFQ14F25X03RK	B-70
YHSFQ18F25X03	B-70
YHSFQ18F25X03RK	B-70
YHSQ10F25X03	B-69
YHSQ10F25X03RK	B-69
YHSQ10M25X03	B-68
YHSQ10M25X03RK	B-68
YHSQ14F11X02D	B-69
YHSQ14F18X02D	B-69
YHSQ14F25X03	B-69
YHSQ14F25X03RK	B-69
YHSQ14M25X03	B-68
YHSQ14M25X03RK	B-68
YHSQ18F11X02D	B-69
YHSQ18F18X02D	B-69
YHSQ18F25X03	B-69
YHSQ18F25X03RK	B-69
YHSQ18M250X03RK	B-68
YHSQ18M25X03	B-68
YHSS10	B-59
YHSS10RK	B-59
YHSS14	B-59
YHSS14RK	B-59
YHSS18	B-59
YHSS18RK	B-59
YKA25R-2N	H-34
YKA26-2N	H-36
YKA26R-2N	H-34
YKA27R-2N	H-34
YKA28-2N	H-36
YKA28R-2N	H-34
YKA2C-2N	H-36
YKA2R-2N	H-34
YKA30-2N	H-36
YKA30R-2N	H-34
YKA321R-2N	H-34
YKA33R-2N	H-34
YKA34-2N	H-36
YKA34CA-2N	H-34
YKA361R-2N	H-34
YKA37R-2N	H-34
YKA391A-2N	H-34
YKA44-2N	H-36
YKA6C-2N	H-36
YM10-28	K-37
YM10-34	K-37
YM12-28	K-37
YM12-34	K-37
YM4-28	K-37
YM4-34	K-37
YM6-28	K-37
YM6-34	K-37
YM8-28	K-37
YM8-34	K-37
YNA32R	I-9, I-37
YNA32R15	I-9, I-37
YNA32R15H	I-3, I-31, I-32
YNA32RT	I-10, I-38
YNA32RT15	I-10, I-38
YNA32RT15H	I-5
YNA34R	I-9
YNA34R15	I-9
YNA34R15H	I-3
YNA34RT	I-10
YNA34RT15	I-10
YNA34RT15H	I-5
YNA36R	I-9
YNA36R15	I-9
YNA36R15H	I-3, I-31, I-32
YNA36RT	I-10, I-38
YNA36RT15	I-10, I-38
YNA36RT15H	I-5, I-6, I-30
YNA39R	I-9, I-37
YNA39R15	I-9, I-37
YNA39R15H	I-3, I-29, I-32
YNA39RT	I-10, I-38
YNA39RT15	I-10, I-38
YNA39RT15H	I-5, I-6, I-30
YNA43R	I-9, I-37
YNA43R15	I-9, I-37
YNA43R15H	I-3, I-29, I-32
YNA43RT	I-10, I-38
YNA43RT15	I-10, I-38
YNA43RT15H	I-5, I-6, I-30
YNA451R	I-9, I-37
YNA451R15	I-9, I-37
YNA451R15H	I-3, I-31, I-32
YNA451RT	I-10, I-38
YNA451RT15	I-10, I-38
YNA451RT15H	I-5, I-6, I-30
YNA49R	I-9
YNA49R15	I-9
YNA49R15H	I-3
YNA49RT	I-10, I-38
YNA49RT15	I-10, I-38
YNA49RT15H	I-5, I-6, I-30
YNA52R	I-9, I-37
YNA52R15	I-9, I-37
YNA52R15H	I-3, I-29, I-32
YNA52RT	I-10, I-38
YNA52RT15	I-10, I-38
YNA52RT15H	I-5, I-6, I-30
YNA54R	I-37
YNA54R15	I-37
YNA54R15H	I-29, I-31, I-32
YNA54RT	I-38
YNA54RT15	I-38
YNA54RT15H	I-30
YNA56R	I-9, I-37
YNA56R15	I-9, I-37
YNA56R15H	I-3, I-4, I-31
YNA56RT	I-10, I-38
YNA56RT15	I-10, I-38
YNA56RT15H	I-5, I-6, I-30
YNA58R	I-9, I-37
YNA58R15	I-9, I-37
YNA58R15H	I-3, I-4, I-32
YNA58RT	I-10, I-38
YNA58RT15	I-10, I-38
YNA58RT15H	I-5, I-6, I-30
YNA594R	I-37
YNA594R15	I-37
YNA594R15H	I-29, I-31, I-32
YNA594RT	I-38
YNA594RT15	I-38
YNA594RT15H	I-30
YNA59R	I-9, I-37
YNA59R15	I-9, I-37
YNA59R15H	I-4, I-29, I-31
YNA59RT	I-10, I-38
YNA59RT15	I-10, I-38
YNA59RT15H	I-5, I-6, I-30
YNA7M10T	I-44
YNA7M6T	I-44
YNA7M7T	I-44
YNA7M8T	I-44
YNM428	K-38
YNM434	K-38
YNM628	K-38
YNM634	K-38
YNM828	K-38
YNM834	K-38
YNS32R	I-11, I-39
YNS32RT	I-12, I-40
YNS34R	I-11, I-39
YNS34RT	I-12, I-40
YNS36R	I-11, I-39
YNS36RT	I-12, I-40
YNS39R	I-11, I-39
YNS39RT	I-12, I-40
YNS43R	I-11, I-39
YNS43RT	I-12, I-40
YNS451R	I-11, I-39
YNS451RT	I-12, I-40
YNS49R	I-11, I-39
YNS49RT	I-12, I-40
YNS52R	I-11, I-39
YNS52RT	I-12, I-40
YNS54R	I-39
YNS54RT	I-40
YNS56R	I-11, I-39
YNS56RT	I-12, I-40
YNS58R	I-11, I-39
YNS58RT	I-12, I-40
YNS594R	I-39
YNS594RT	I-40
YNS59R	I-11, I-39
YNS59RT	I-12, I-40
YNT32R32R	I-13, I-42
YNT32R32RHT	I-26
YNT34R34R	I-13, I-42
YNT34R34RHT	I-26
YNT36R36R	I-13, I-42
YNT36R36RHT	I-26
YNT39R39R	I-13, I-42
YNT39R39RHT	I-26
YNT43R43R	I-13, I-42
YNT43R43RHT	I-26
YNT451R451R	I-13, I-42
YNT451R451RHT	I-26
YNT49R49R	I-13, I-42
YNT49R49RHT	I-26
YNT52R52R	I-13, I-42
YNT52R52RHT	I-26
YNT54R54R	I-42
YNT56R56R	I-13, I-42
YNT56R56RHT	I-26
YNT58R58R	I-13, I-42
YNT58R58RHT	I-26
YNT594R594R	I-42
YNT59R59R	I-13, I-42
YNT59R59RHT	I-26

ALPHA-NUMERIC INDEX BY CATALOG NUMBER (Continued)

Catalog Number	Page #
YNTA245MRTACCC	I-51
YNTA32R	I-14, I-41
YNTA32RHT	I-27
YNTA32RTACCC	I-51
YNTA34R	I-14, I-41
YNTA34RHT	I-27
YNTA36R	I-14, I-41
YNTA36RHT	I-27
YNTA36RTACCC	I-51
YNTA39R	I-14, I-41
YNTA39RHT	I-27
YNTA39RTACCC	I-51
YNTA43R	I-14, I-41
YNTA43RHT	I-27
YNTA43RTACCC	I-51
YNTA451R	I-14, I-41
YNTA451RHT	I-27
YNTA451RTACCC	I-51
YNTA49R	I-14, I-41
YNTA49RHT	I-27
YNTA49RTACCC	I-51
YNTA52RTACCC	I-51
YNTA54R	I-14, I-41
YNTA54RHT	I-27
YNTA56R	I-14, I-41
YNTA56RHT	I-27
YNTA58R	I-14, I-41
YNTA58RHT	I-27
YNTA594R	I-41
YNTA59R	I-14, I-41
YNTA59RHT	I-27
YNU245MRACCC	I-52
YNU32R	I-15, I-43
YNU32RACCC	I-52
YNU32RHT	I-28
YNU34R	I-15, I-43
YNU34RHT	I-28
YNU36R	I-15, I-43
YNU36RACCC	I-52
YNU36RHT	I-28
YNU39R	I-15, I-43
YNU39RACCC	I-52
YNU39RHT	I-28
YNU43R	I-15, I-43
YNU43RACCC	I-52
YNU43RHT	I-28
YNU451R	I-15, I-43
YNU451RACCC	I-52
YNU451RHT	I-28
YNU49R	I-15, I-43
YNU49RACCC	I-52
YNU49RHT	I-28
YNU52RACCC	I-52
YNU54R	I-15, I-43
YNU54RHT	I-28
YNU56R	I-15, I-43
YNU56RHT	I-28
YNU58R	I-15
YNU58RHT	I-28
YNU594R	I-43
YNU595R	I-43
YNU59R	I-15, I-43
YNU59RHT	I-28
YOT3434	H-31
YOU32R	H-54
YOU33R	H-54
YOU35R	H-54
YOU361R	H-54
YOU37R	H-54
YOU39R	H-54
YOU41R	H-54
YOU421R	H-54
YOU43R	H-54
YOU44R	H-54
YOU453R	H-54
YOU45R	H-54
YOU48R	H-54
YOU49R	H-54
YP25U25	H-23
YP26AU2	H-23, H-38
YP27AU2	H-23
YP27AU26	H-23, H-38
YP27AU4	H-23, H-38
YP28C28	H-21
YP28U2	H-23
YP28U26	H-23, H-38
YP28U28	H-23
YP29C26	H-21
YP2C2	H-21
YP2U3	H-23, H-38
YPC26R8U	H-25
YPC28R28A	H-24
YPC28U26	H-24, H-38
YPC28U28	H-24
YPC28U4	H-24, H-38
YPC29C26	K-72
YPC2A8U	H-25
YPC33R26U	H-24, H-38
YPC33R28R	H-24
YPC33R33R	H-24
YPC36A32	H-24
YPC36A36	H-24
YPC38R26U	H-24
YPC40A32	H-24
YPC40A36	H-24
YPC40A40	H-24
YQE-91	B-92
YR2C2WT	C-111
YRA1CU-1	H-78
YRA25A-1	H-78
YRA25U	H-78
YRA26U	H-78
YRA27U	H-78
YRA28U	H-78
YRA4CU-1	H-78
YRA6CU-1	H-78
YRA8CU-1	H-78
YRAL1CU	H-78
YRAL4CU	H-78
YRB1CU1TTN	K-67
YRB1CU2TTN	K-67
YRB25U2	C-153
YRB25U25TTN	K-67
YRB25U2TTN	K-67
YRB25U3TTN	K-67
YRB27U25	C-153
YRB27U25TW	K-67
YRB27U26	C-153
YRB2825T	K-70
YRB28U1TW	K-67
YRB28U25TW	K-67
YRB28U26	C-153
YRB28U26TW	K-67
YRB28U28TW	K-67
YRB28U3TW	K-67
YRB29U28	C-153
YRB2U3TTN	K-67
YRB2U4	C-153
YRB31U25TW	K-67
YRB31U28	C-153
YRB31U28TW	K-67
YRB31U29	C-153
YRB31U31TW	K-67
YRB3428T	K-70
YRB34U25TW	K-68
YRB34U28TW	K-68
YRB34U29TW	K-68
YRB34U30TW	K-68
YRB34U31	C-153
YRB34U31TW	K-68
YRB34U34TW	K-68
YRB36U31	C-153
YRB36U34	C-153
YRB39U31TW	K-68
YRB39U34	C-153
YRB39U34TW	K-68
YRB39U36	C-153
YRB39U39TW	K-68
YRB44U31TW	K-68
YRB44U34TW	K-68
YRB44U39TW	K-68
YRB44U44TW	K-68
YRV2CV6C-L	B-58
YRV4CV6C-L	B-58
YRV6CV10-L	B-58
YRV6CV8C-L	B-58
YRV8CV10-L	B-58
YRV8CV14-L	B-58
YS10WAG1	C-150
YS12AG1	C-150
YS1C	C-111
YS1CA1	C-150
YS1C-LB	C-113, C-114
YS1C-LBOX	C-110
YS1C-T	C-116
YS25	C-111
YS25A1	C-150
YS25AT	C-152
YS25FXLTCKITC	C-118
YS25-LB	C-113, C-114
YS25-LBOX	C-110
YS25LTCKITC	C-118
YS25-T	C-116
YS25UCG1	K-66
YS26	C-111
YS26A1	C-151
YS26AT	C-152
YS26FXLTCKITC	C-118
YS26-LB	C-113, C-114
YS26-LBOX	C-110
YS26LTCKITC	C-118
YS26-T	C-116
YS26UCG1	K-66
YS27	C-111
YS27A1	C-151
YS27AT	C-152
YS27-LB	C-113, C-114
YS27-LBOX	C-110
YS27UCG1	K-66
YS28	C-111
YS28A1	C-151
YS28AT	C-152
YS28-LB	C-113, C-115
YS28-LBOX	C-110
YS28LTCKITC	C-118
YS28-T	C-116
YS28UCG1	K-66
YS29	C-111
YS29A1	C-151
YS29AT	C-152
YS29FXLTCKITC	C-118
YS29-LB	C-113, C-115
YS29-LBOX	C-110
YS29-T	C-116
YS2C	C-111
YS2CA1	C-150
YS2CAT	C-152
YS2CFXLTCKITC	C-118
YS2C-LB	C-113, C-114
YS2C-LBOX	C-110
YS2CLTCKITC	C-118
YS2C-T	C-116
YS2UCG1	K-66
YS30	C-111
YS30A1	C-151
YS30AT	C-152
YS30-FXB	C-117
YS30-L	C-110
YS30-LB	C-113, C-115
YS30-T	C-116
YS31	C-111
YS31A1	C-151
YS31ACG1	K-66
YS31AT	C-152
YS31-FXB	C-117
YS31-L	C-110
YS31LTCKITC	C-118
YS31-T	C-116
YS32	C-111
YS32A1	C-151
YS32-FXB	C-117
YS32-L	C-110
YS32-LB	C-113, C-115
YS34	C-111
YS34A1	C-151
YS34AT	C-152
YS34-FXB	C-117
YS34FXLTCKITC	C-118
YS34-L	C-110
YS34-LB	C-113, C-115
YS34LTCKITC	C-118
YS34-T	C-116
YS36	C-111
YS36A1	C-151
YS36-FXB	C-117
YS36-L	C-110
YS38-FXB	C-117
YS38FXLTCKITC	C-118
YS38-L	C-110
YS38-LB	C-113, C-115

ALPHA-NUMERIC INDEX BY CATALOG NUMBER (Continued)

Catalog Number	Page #
YS39	C-111
YS39A1	C-151
YS39AM1	C-151
YS39AT	C-152
YS39-L	C-110
YS39LTCKITC	C-118
YS39-T	C-116
YS3C	C-111
YS3C-L	C-110
YS3C-LB	C-113, C-114
YS40-FXB	C-117
YS42A1	C-151
YS44	C-111
YS44A1	C-151
YS44AT	C-152
YS44-FXB	C-117
YS44FXLTCKITC	C-118
YS44-L	C-110
YS45A1	C-151
YS46	C-111
YS46A1	C-151
YS47A1	C-151
YS48	C-111
YS483A1	C-151
YS48A1	C-151
YS4C	C-111
YS4CA1	C-150
YS4CFXLTCKITC	C-118
YS4C-LB	C-113, C-114
YS4C-LBOX	C-110
YS4C-T	C-116
YS5C	C-111
YS5C-LB	C-113, C-114
YS5C-LBOX	C-110
YS6C	C-111
YS6CA1	C-150
YS6CFXLTCKITC	C-118
YS6C-LBOX	C-110
YS6C-T	C-116
YS8C	C-111
YS8CA1	C-150
YS8C-FXB	C-117
YS8CFXLTCKITC	C-118
YS8C-L-BOX	C-110
YSA25R-2N	H-35
YSA26R-2N	H-35
YSA28R-2N	H-35
YSA2R-2N	H-35
YSA30R-2N	H-35
YSA321R-2N	H-35
YSA37R-2N	H-35
YSCM104	B-57, C-109
YSCM133	B-57, C-109
YSCM167	B-57, C-109
YSCM17	B-57, C-109
YSCM212	B-57, C-109
YSCM231	B-57, C-109
YSCM27	B-57, C-109
YSCM42	B-57, C-109
YSCM66	B-57, C-109
YSCM80	B-57, C-109
YSD25R25R	H-47
YSD26R25R	H-47
YSD26R26R	H-47
YSD26R2R	H-47
YSD26R2W	H-47
YSD27R25R	H-47
YSD27R26R	H-47
YSD27R27R	H-47
YSD27R2R	H-47
YSD27R2W	H-47
YSD28R25R	H-47
YSD28R26R	H-47
YSD28R27R	H-47
YSD28R28R	H-47
YSD28R2R	H-47
YSD28R2W	H-47
YSE10	B-50
YSE10-BOX	B-50
YSE10HHS	B-51
YSE10HN	B-48
YSE14H	B-50
YSE14H-BOX	B-50
YSE14HHS	B-51
YSE14HN	B-48
YSE18H	B-50
YSE18H-BOX	B-50
YSE18HHS	B-51
YSE18HN	B-48
YSES10K	B-52
YSES14K	B-52
YSES18K	B-52
YSF28CP	K-41
YSH2929	C-136
YSH3429	C-136
YSH3434	C-136
YSH3931	C-136
YSH3939	C-136
YSHG3429	E-13
YSHG3434	E-13
YSHG3931	E-13
YSHG4429	E-13
YSM10	B-56
YSM14	B-56
YSM18	B-56
YSM1C	B-56
YSM25	B-56
YSM26	B-56
YSM27	B-56
YSM28	B-56
YSM2C	B-56
YSM4C	B-56
YSM6C	B-56
YSM8C	B-56
YSP1C-T	C-116
YSP25-T	C-116
YSP26-T	C-116
YSP28-T	C-116
YSP29-T	C-116
YSP2C-T	C-116
YSP30-T	C-116
YSP31-T	C-116
YSP34-T	C-116
YSP39-T	C-116
YSP4C-T	C-116
YSR10CFX12CLTCKITC	C-122, C-128
YSR10CFX14CLTCKITC	C-122, C-128
YSR25FX2CFXLTCKITC	C-122, C-127
YSR25FX4CFXLTCKITC	C-122, C-127
YSR25FX6CFXLTCKITC	C-122, C-127
YSR25FX8CFXLTCKITC	C-122, C-127
YSR26FX25FXLTCKITC	C-121, C-127
YSR26FX2CFXLTCKITC	C-121, C-127
YSR26FX4CFXLTCKITC	C-121, C-127
YSR26FX6CFXLTCKITC	C-121, C-127
YSR2825FXLTCKITC	C-121, C-127
YSR282CFXLTCKITC	C-121, C-127
YSR284CFXLTCKITC	C-121, C-127
YSR286CFXLTCKITC	C-121, C-127
YSR28FX25FXLTCKITC	C-121, C-126
YSR28FX26FXLTCKITC	C-121, C-126
YSR28FX28LTCKITC	C-121, C-126
YSR28FX2CFXLTCKITC	C-121, C-126
YSR28FX4CFXLTCKITC	C-121, C-127
YSR29FX25FXLTCKITC	C-121, C-126
YSR29FX28LTCKITC	C-121, C-126
YSR29FX2CFXLTCKITC	C-121, C-126
YSR2CFX4CFXLTCKITC	C-122, C-128
YSR2CFX6CFXLTCKITC	C-122, C-128
YSR2CFX8CFXLTCKITC	C-122, C-128
YSR3125FXLTCKITC	C-121, C-126
YSR3126FXLTCKITC	C-121, C-126
YSR3128FXLTCKITC	C-120, C-125
YSR3128LTCKITC	C-121, C-125
YSR3129FXLTCKITC	C-120, C-125
YSR312CFXLTCKITC	C-121, C-126
YSR314CFXLTCKITC	C-121, C-126
YSR316CFXLTCKITC	C-121, C-126
YSR32FX28FXLTCKITC	C-120, C-125
YSR32FX29FXLTCKITC	C-120, C-125
YSR3425FXLTCKITC	C-120, C-124
YSR3426FXLTCKITC	C-120, C-124
YSR3428FXLTCKITC	C-120, C-124
YSR3428LTCKITC	C-120, C-124
YSR3429FXLTCKITC	C-120, C-124
YSR3431LTCKITC	C-120, C-124
YSR3434FXLTCKITC	C-120, C-124
YSR34FX25FXLTCKITC	C-120, C-125
YSR34FX26FXLTCKITC	C-120, C-125
YSR34FX28FXLTCKITC	C-120, C-125
YSR34FX28LTCKITC	C-120, C-125
YSR34FX29FXLTCKITC	C-120, C-124
YSR34FX2CFXLTCKITC	C-120, C-125
YSR34FX31LTCKITC	C-120, C-124
YSR34FX4CFXLTCKITC	C-120, C-125
YSR34FX6CFXLTCKITC	C-120, C-125
YSR38FX26FXLTCKITC	C-120, C-124
YSR38FX28FXLTCKITC	C-120, C-124
YSR38FX28LTCKITC	C-120, C-124
YSR38FX29FXLTCKITC	C-120, C-124
YSR38FX29LTCKITC	C-120, C-124
YSR38FX30LTCKITC	C-120, C-124
YSR38FX31LTCKITC	C-120, C-124
YSR38FX34FXLTCKITC	C-119, C-124
YSR38FX34LTCKITC	C-119, C-124
YSR3928FXLTCKITC	C-119, C-123
YSR3928LTCKITC	C-119, C-123
YSR3929FXLTCKITC	C-119, C-123
YSR3929LTCKITC	C-119, C-123
YSR3930LTCKITC	C-119, C-123
YSR3931LTCKITC	C-119, C-123
YSR3934FXLTCKITC	C-119, C-123
YSR3934LTCKITC	C-119, C-123
YSR3938FXLTCKITC	C-119, C-123
YSR3939LTCKITC	C-119, C-123
YSR44FX28FXLTCKITC	C-119, C-123
YSR44FX28LTCKITC	C-119, C-123
YSR44FX29FXLTCKITC	C-119, C-123
YSR44FX29LTCKITC	C-119, C-123
YSR44FX30LTCKITC	C-119, C-123
YSR44FX31LTCKITC	C-119, C-123
YSR44FX34FXLTCKITC	C-119, C-123
YSR44FX34LTCKITC	C-119, C-123
YSR44FX38FXLTCKITC	C-119, C-123
YSR44FX39LTCKITC	C-119, C-123
YSR4CFX10CLTCKITC	C-122, C-128
YSR4CFX6CFXLTCKITC	C-122, C-128
YSR4CFX8CFXLTCKITC	C-122, C-128
YSR6CFX10CLTCKITC	C-122, C-128
YSR6CFX14CLTCKITC	C-122, C-128
YSR6CFX8CFXLTCKITC	C-122, C-128
YSR8CFX10CLTCKITC	C-122, C-128
YSR8CFX14CLTCKITC	C-122, C-128
YSS2R	H-48
YSS4R	H-48
YSS6R	H-48
YSS6RG2	H-48
YST2525	C-137
YST2626	C-137
YST2825	C-137
YST2828	C-137
YST282C	C-137
YST2929	C-137
YST2C2C	C-137
YST3131	C-137
YST3428	C-137
YST3434	C-137
YST3939	C-137
YST4C4C	C-137
YSU25A25A	H-46
YSU25R25R	H-46
YSU25R2R	H-46
YSU25R2W	H-46
YSU25R4W	H-46
YSU25R6W	H-46
YSU2R2R	H-46
YSU2R2W	H-46
YSU2R4W	H-46
YSU2R6W	H-46
YSU2R8W	H-46
YSU2W2W	H-46
YSU2W4W	H-46
YSU2W6W	H-46
YSU2W8W	H-46
YSU4W4W	H-46
YSU4W6W	H-46
YSU4W8W	H-46
YSU6W6W	H-46
YSV10	B-53
YSV1014-G2	B-58
YSV10BBOX	B-46
YSV10BOX	B-53
YSV10H	B-55
YSV10-HBOX	B-55
YSV1214-G1	B-58
YSV14	B-53
YSV1418	B-58
YSV14BBOX	B-46
YSV14BOX	B-53
YSV14H	B-55

ALPHA-NUMERIC INDEX BY CATALOG NUMBER (Continued)

Catalog Number	Page #
YSV14-HBOX	B-55
YSV18	B-53
YSV18BBOX	B-46
YSV18BOX	B-53
YSV18H	B-55
YSV18-HBOX	B-55
YSV1C-FXB	C-117
YSV1CL	B-54
YSV1C-LBOX	B-54
YSV25-FXB	C-117
YSV25L	B-54
YSV25-LBOX	B-54
YSV26-FXB	C-117
YSV26L	B-54
YSV26-LBOX	B-54
YSV27-FXB	C-117
YSV27L	B-54
YSV27-LBOX	B-54
YSV28-FXB	C-117
YSV28L	B-54
YSV28-LBOX	B-54
YSV2C-FXB	C-117
YSV2CL	B-54
YSV2C-LBOX	B-54
YSV4C-FXB	C-117
YSV4CL	B-54
YSV4C-LBOX	B-54
YSV6C-FXB	C-117
YSV6CL	B-54
YSV6C-LBOX	B-54
YSV8CL	B-54
YSV8C-LBOX	B-54
YTA25R-2N	H-33
YTA26-2N	H-35
YTA26R-2N	H-33
YTA27R-2N	H-33
YTA28-2N	H-35
YTA28R-2N	H-33
YTA2C-2N	H-35
YTA2R-2N	H-33
YTA321R-2N	H-33
YTA33R-2N	H-33
YTA34-2N	H-35
YTA361R-2N	H-33
YTA37R-2N	H-33
YTA391A-2N	H-33
YTA39R-2N	H-33
YTA43R-2N	H-33
YTS301A	I-33
YTS301AT	I-35
YTS311A	I-33
YTS311AT	I-35
YTS312E	I-46
YTS32AR	I-34
YTS32ART	I-36
YTS32R33RS	I-7
YTS32R34RS	I-7
YTS32R34RSHT	I-20
YTS32RT33RS	I-8
YTS32RT33RSHT	I-21
YTS32RT34RS	I-8
YTS32RT34RSHT	I-21
YTS331A	I-33
YTS331AT	I-35
YTS34R34RS	I-7
YTS34R34RSHT	I-20
YTS34RT34RS	I-8
YTS34RT34RSHT	I-21
YTS351A	I-33
YTS351AT	I-35
YTS361A	I-33
YTS361AT	I-35
YTS36R362RS	I-7
YTS36R362RSHT	I-20
YTS36R36RS	I-7
YTS36R36RSHT	I-20
YTS36RT362RS	I-8
YTS36RT362RSHT	I-21
YTS36RT36RS	I-8
YTS36RT36RSHT	I-21
YTS375E	H-65, I-46
YTS391A	I-33
YTS391AT	I-35
YTS39A	I-33
YTS39AR	I-34
YTS39ART	I-36
YTS39AT	I-35
YTS39R43RS	I-7
YTS39R43RSHT	I-20
YTS39RT43RS	I-8
YTS39RT43RSHT	I-21
YTS431A	I-33
YTS431AT	I-35
YTS438E	H-65, I-46
YTS43R43RS	I-7
YTS43R43RSHT	I-20
YTS43RT43RS	I-8
YTS43RT43RSHT	I-21
YTS445A	I-33
YTS445AT	I-35
YTS451A	I-33
YTS451AR	I-34
YTS451ART	I-36
YTS451AT	I-35
YTS451R449RS	I-7
YTS451R449RSHT	I-20
YTS451R48RS	I-7
YTS451R48RSHT	I-20
YTS451RT449RS	I-8
YTS451RT449RSHT	I-21
YTS451RT48RS	I-8
YTS451RT48RSHT	I-21
YTS457A	I-33
YTS457AT	I-35
YTS463A	I-33
YTS463AT	I-35
YTS47A	I-33
YTS47AT	I-35
YTS484A	I-33
YTS484AT	I-35
YTS486A	I-33
YTS486AT	I-35
YTS48A	I-33
YTS48AR	I-34
YTS48ART	I-36
YTS48AT	I-35
YTS48R481RS	I-7
YTS48R481RSHT	I-20
YTS48R48RS	I-7
YTS48R48RSHT	I-20
YTS48RT481RS	I-8
YTS48RT481RSHT	I-21
YTS48RT48RS	I-8
YTS48RT48RSHT	I-21
YTS49AR	I-34
YTS49ART	I-36
YTS49R483RS	I-7
YTS49R483RSHT	I-20
YTS49R48RS	I-7
YTS49R48RSHT	I-20
YTS49RT483RS	I-8
YTS49RT483RSHT	I-21
YTS49RT48RS	I-8
YTS49RT48RSHT	I-21
YTS500E	I-46
YTS51AR	I-34
YTS51ART	I-36
YTS52R48RS	I-7
YTS52R48RSHT	I-20
YTS52R521RS	I-7
YTS52R521RSHT	I-20
YTS52R59RS	I-7
YTS52R59RSHT	I-20
YTS52RT48RS	I-8
YTS52RT48RSHT	I-21
YTS52RT521RS	I-8
YTS52RT521RSHT	I-21
YTS52RT59RS	I-8
YTS52RT59RSHT	I-21
YTS54959RSHT	I-20
YTS549R521RS	I-7
YTS549R521RSHT	I-20
YTS549R549RS	I-7
YTS549R549RSHT	I-20
YTS549R59RS	I-7
YTS549RT521RS	I-8
YTS549RT521RSHT	I-21
YTS549RT549RS	I-8
YTS549RT549RSHT	I-21
YTS549RT59RS	I-8
YTS549RT59RSHT	I-21
YTS55AR	I-34
YTS55ART	I-36
YTS56R59RS	I-7
YTS56R59RSHT	I-20
YTS56RT59RS	I-8
YTS56RT59RSHT	I-21
YTS58R48RS	I-7
YTS58R48RSHT	I-20
YTS58RT48RS	I-8
YTS58RT48RSHT	I-21
YTS592AR	I-34
YTS592ART	I-36
YTS59AR	I-34
YTS59ART	I-36
YTS59R521RS	I-7
YTS59R521RSHT	I-20
YTS59R59RS	I-7
YTS59R59RSHT	I-20
YTS59RT521RS	I-8
YTS59RT521RSHT	I-21
YTS59RT59RS	I-8
YTS59RT59RSHT	I-21
YTTAG388	E-25
YTU25R25R	H-32
YTU25R4W	H-32
YTU26R26R	H-32
YTU27R27R	H-32
YTU28R28R	H-32
YTU30R30R	H-32
YTU321R26R	H-32
YTU321R27R	H-32
YTU321R28R	H-32
YTU321R2R	H-32
YTU321R321R	H-32
YTU33R26R	H-32
YTU33R28R	H-32
YTU33R33R	H-32
YTW301A	I-29
YTW301A331AEK	I-29
YTW301AD	I-31
YTW301AD331AEK	I-31
YTW301ADT	I-32
YTW301ADT331AEK	I-32
YTW301AT	I-30
YTW301AT331AEK	I-30
YTW311A	I-29
YTW311A331AEK	I-29
YTW311AD	I-31
YTW311AD331AEK	I-31
YTW311ADT	I-32
YTW311ADT331AEK	I-32
YTW311AT	I-30
YTW311AT331AEK	I-30
YTW32R	I-3
YTW32R33REK	I-3
YTW32R33REKHT	I-16
YTW32R34REK	I-3
YTW32R34REKHT	I-16
YTW32RD	I-4
YTW32RD33REK	I-4
YTW32RD33REKHT	I-17
YTW32RD34REK	I-4
YTW32RD34REKHT	I-17
YTW32RDHT	I-17
YTW32RDT	I-6
YTW32RDT33REK	I-6
YTW32RDT33REKHT	I-19
YTW32RDT34REK	I-6
YTW32RDT34REKHT	I-19
YTW32RDTHT	I-19
YTW32RHT	I-16
YTW32RT	I-5
YTW32RT33REK	I-5
YTW32RT33REKHT	I-18
YTW32RT34REK	I-5
YTW32RT34REKHT	I-18
YTW32RTHT	I-18
YTW331A	I-29
YTW331A331AEK	I-29
YTW331AD	I-31
YTW331AD331AEK	I-31
YTW331ADT	I-32
YTW331ADT331AEK	I-32
YTW331AE	I-29, I-30, I-32
YTW331AT	I-30
YTW331AT331AEK	I-30
YTW33RE	I-3, I-5, I-6
YTW33REHT	I-16, I-17, I-19
YTW34R	I-3

ALPHA-NUMERIC INDEX BY CATALOG NUMBER (Continued)

Catalog Number	Page #
YTW34R34REK	I-3
YTW34R34REKHT	I-16
YTW34RD	I-4
YTW34RD34REK	I-4
YTW34RD34REKHT	I-17
YTW34RDHT	I-17
YTW34RDT	I-6
YTW34RDT34REK	I-6
YTW34RDT34REKHT	I-19
YTW34RDTHT	I-19
YTW34RE	I-4, I-5, I-6
YTW34REHT	I-16, I-17, I-19
YTW34RHT	I-16
YTW34RT	I-5
YTW34RT34REK	I-5
YTW34RT34REKHT	I-18
YTW34RTHT	I-18
YTW351A	I-29
YTW351A351AEK	I-29
YTW351AD	I-31
YTW351AD351AEK	I-31
YTW351ADT	I-32
YTW351ADT351AEK	I-32
YTW351AE	I-29, I-30, I-32
YTW351AT	I-30
YTW351T351AEK	I-30
YTW361A	I-29
YTW361A39AEK	I-29
YTW361AD	I-31
YTW361AD39AEK	I-31
YTW361ADT	I-32
YTW361ADT39AEK	I-32
YTW361AT	I-30
YTW361AT39AEK	I-30
YTW362RE	I-3, I-4, I-6
YTW362REHT	I-16, I-18, I-19
YTW36R	I-3
YTW36R362REK	I-3
YTW36R362REKHT	I-16
YTW36R36REK	I-3
YTW36R36REKHT	I-16
YTW36RD	I-4
YTW36RD362REK	I-4
YTW36RD362REKHT	I-17
YTW36RD36REK	I-4
YTW36RD36REKHT	I-17
YTW36RDHT	I-17
YTW36RDT	I-6
YTW36RDT362REK	I-6
YTW36RDT362REKHT	I-19
YTW36RDT36REK	I-6
YTW36RDT36REKHT	I-19
YTW36RDTHT	I-19
YTW36RE	I-3, I-4, I-6
YTW36REHT	I-16, I-17, I-19
YTW36RHT	I-16
YTW36RT	I-5
YTW36RT362REK	I-5
YTW36RT362REKHT	I-18
YTW36RT36REK	I-5
YTW36RT36REKHT	I-18
YTW36RTHT	I-18
YTW391A	I-29
YTW391A431AEK	I-29
YTW391AD	I-31
YTW391AD431AEK	I-31
YTW391ADT	I-32
YTW391ADT431AEK	I-32
YTW391AT	I-30
YTW391AT431AEK	I-30
YTW39A	I-29
YTW39A39AEK	I-29
YTW39AD	I-31
YTW39AD39AEK	I-31
YTW39ADT	I-32
YTW39ADT39AEK	I-32
YTW39AE	I-29, I-30, I-32
YTW39AT	I-30
YTW39AT39AEK	I-30
YTW39R	I-3
YTW39R43REK	I-3
YTW39R43REKHT	I-16
YTW39RD	I-4
YTW39RD43REK	I-4
YTW39RD43REKHT	I-17
YTW39RDHT	I-17
YTW39RDT	I-6
YTW39RDT43REK	I-6
YTW39RDT43REKHT	I-19
YTW39RDTHT	I-19
YTW39RHT	I-16
YTW39RT	I-5
YTW39RT43REK	I-5
YTW39RT43REKHT	I-18
YTW39RTHT	I-18
YTW431A	I-29
YTW431A431AEK	I-29
YTW431AD	I-31
YTW431AD431AEK	I-31
YTW431ADT	I-32
YTW431ADT431AEK	I-32
YTW431AE	I-29, I-31, I-32
YTW431AT	I-30
YTW431AT431AEK	I-30
YTW43R	I-3
YTW43R43REK	I-3
YTW43R43REKHT	I-16
YTW43RD	I-4
YTW43RD43REK	I-4
YTW43RD43REKHT	I-17
YTW43RDHT	I-17
YTW43RDT	I-6
YTW43RDT43REK	I-6
YTW43RDT43REKHT	I-19
YTW43RDTHT	I-19
YTW43RE	I-3, I-4, I-5
YTW43REHT	I-16, I-18, I-19
YTW43RHT	I-16
YTW43RT	I-5
YTW43RT43REK	I-5
YTW43RT43REKHT	I-18
YTW43RTHT	I-18
YTW445A	I-29
YTW445A463AEK	I-29
YTW445AD	I-31
YTW445AD463AEK	I-31
YTW445ADT	I-32
YTW445ADT463AEK	I-32
YTW445AT	I-30
YTW445AT463AEK	I-30
YTW451A	I-29
YTW451A463AEK	I-29
YTW451AD	I-31
YTW451AD463AEK	I-31
YTW451ADT	I-32
YTW451ADT463AEK	I-32
YTW451AT	I-30
YTW451AT463AEK	I-30
YTW451R	I-3
YTW451R45REK	I-3
YTW451R45REKHT	I-16
YTW451R481REK	I-3
YTW451R481REKHT	I-16
YTW451R48REK	I-3
YTW451R48REKHT	I-16
YTW451RD	I-4
YTW451RD45REK	I-4
YTW451RD45REKHT	I-17
YTW451RD481REK	I-4
YTW451RD481REKHT	I-17
YTW451RD48REK	I-4
YTW451RD48REKHT	I-17
YTW451RDHT	I-17
YTW451RDT	I-6
YTW451RDT45REK	I-6
YTW451RDT45REKHT	I-19
YTW451RDT481REK	I-6
YTW451RDT481REKHT	I-19
YTW451RDT48REK	I-6
YTW451RDT48REKHT	I-19
YTW451RDTHT	I-19
YTW451RHT	I-16
YTW451RT	I-5
YTW451RT45REK	I-5
YTW451RT45REKHT	I-18
YTW451RT481REK	I-5
YTW451RT481REKHT	I-18
YTW451RT48REK	I-5
YTW451RT48REKHT	I-18
YTW451RTHT	I-18
YTW457A	I-29
YTW457A463AEK	I-29
YTW457AD	I-31
YTW457AD463AEK	I-31
YTW457ADT	I-32
YTW457ADT463AEK	I-32
YTW457AT	I-30
YTW457AT463AEK	I-30
YTW45RE	I-3, I-5, I-6
YTW45REHT	I-16, I-17, I-18
YTW463A	I-29
YTW463A463AEK	I-29
YTW463AD	I-31
YTW463AD463AEK	I-31
YTW463ADT	I-32
YTW463ADT463AEK	I-32
YTW463AE	I-29, I-31, I-32
YTW463AT	I-30
YTW463AT463AEK	I-30
YTW47A	I-29
YTW47A47AEK	I-29
YTW47AD	I-31
YTW47AD47AEK	I-31
YTW47ADT	I-32
YTW47ADT47AEK	I-32
YTW47AE	I-29, I-30, I-32
YTW47AT	I-30
YTW47AT47AEK	I-30
YTW481RE	I-3, I-5, I-6
YTW481REHT	I-16, I-17, I-19
YTW483RE	I-3, I-4, I-5
YTW483REHT	I-16, I-17, I-19
YTW484A	I-29
YTW484A484AEK	I-29
YTW484AD	I-31
YTW484AD484AEK	I-31
YTW484ADT	I-32
YTW484ADT484AEK	I-32
YTW484AE	I-30, I-31, I-32
YTW484AT	I-30
YTW484AT484AEK	I-30
YTW486A	I-29
YTW486A486AEK	I-29
YTW486AD	I-31
YTW486AD486AEK	I-31
YTW486ADT	I-32
YTW486ADT486AEK	I-32
YTW486AE	I-29, I-30, I-32
YTW486AT	I-30
YTW486AT486AEK	I-30
YTW48A	I-29
YTW48A484AEK	I-29
YTW48AD	I-31
YTW48AD484AEK	I-31
YTW48ADT	I-32
YTW48ADT484AEK	I-32
YTW48AT	I-30
YTW48AT484AEK	I-30
YTW48R	I-3
YTW48R481REK	I-3
YTW48R481REKHT	I-16
YTW48R48REK	I-3
YTW48R48REKHT	I-16
YTW48RD	I-4
YTW48RD481REK	I-4
YTW48RD481REKHT	I-17
YTW48RD48REK	I-4
YTW48RD48REKHT	I-17
YTW48RDHT	I-17
YTW48RDT	I-6
YTW48RDT481REK	I-6
YTW48RDT481REKHT	I-19
YTW48RDT48REK	I-6
YTW48RDT48REKHT	I-19
YTW48RDTHT	I-19
YTW48RE	I-3, I-4, I-6
YTW48REHT	I-16, I-17, I-19
YTW48RHT	I-16
YTW48RT	I-5
YTW48RT481REK	I-5
YTW48RT481REKHT	I-18
YTW48RT48REK	I-5
YTW48RT48REKHT	I-18
YTW48RTHT	I-18
YTW49R	I-3
YTW49R483REK	I-3
YTW49R483REKHT	I-16
YTW49R50REK	I-3
YTW49R50REKHT	I-16
YTW49RD	I-4

ALPHA-NUMERIC INDEX BY CATALOG NUMBER (Continued)

Catalog Number	Page #
YTW49RD483REK	I-4
YTW49RD483REKHT	I-17
YTW49RD50REK	I-4
YTW49RD50REKHT	I-17
YTW49RDHT	I-17
YTW49RDT	I-6
YTW49RDT483REK	I-6
YTW49RDT483REKHT	I-19
YTW49RDT50REK	I-6
YTW49RDT50REKHT	I-19
YTW49RDTHT	I-19
YTW49RHT	I-16
YTW49RT	I-5
YTW49RT483REK	I-5
YTW49RT483REKHT	I-18
YTW49RT50REK	I-5
YTW49RT50REKHT	I-18
YTW49RTHT	I-18
YTW50RE	I-3, I-5, I-6
YTW50REHT	I-16, I-17, I-19
YTW521RE	I-3, I-5, I-6
YTW521REHT	I-16, I-17, I-18
YTW52R	I-3
YTW52R50REK	I-3
YTW52R50REKHT	I-16
YTW52R521REK	I-3
YTW52R521REKHT	I-16
YTW52R56REK	I-3
YTW52R56REKHT	I-16
YTW52RD	I-4
YTW52RD50REK	I-4
YTW52RD50REKHT	I-17
YTW52RD521REK	I-4
YTW52RD521REKHT	I-17
YTW52RD56REK	I-4
YTW52RD56REKHT	I-17
YTW52RDHT	I-17
YTW52RDT	I-6
YTW52RDT50REK	I-6
YTW52RDT50REKHT	I-19
YTW52RDT521REK	I-6
YTW52RDT521REKHT	I-19
YTW52RDT56REK	I-6
YTW52RDT56REKHT	I-19
YTW52RDTHT	I-19
YTW52RHT	I-16, I-18
YTW52RT	I-5
YTW52RT50REK	I-5
YTW52RT50REKHT	I-18
YTW52RT521REK	I-5
YTW52RT521REKHT	I-18
YTW52RT56REK	I-5
YTW52RT56REKHT	I-18
YTW52RTHT	I-18
YTW549R	I-3
YTW549R521REK	I-3
YTW549R521REKHT	I-16
YTW549R549REK	I-3
YTW549R549REKHT	I-16
YTW549R56REK	I-3
YTW549R56REKHT	I-16
YTW549RD	I-4
YTW549RD521REK	I-4
YTW549RD521REKHT	I-17
YTW549RD549REK	I-4
YTW549RD549REKHT	I-17
YTW549RD56REK	I-4
YTW549RD56REKHT	I-17
YTW549RDHT	I-17
YTW549RDT	I-6
YTW549RDT521REK	I-6
YTW549RDT521REKHT	I-19
YTW549RDT549REK	I-6
YTW549RDT549REKHT	I-19
YTW549RDT56REK	I-6
YTW549RDT56REKHT	I-19
YTW549RDTHT	I-19
YTW549RE	I-3, I-5, I-6
YTW549REHT	I-16, I-17, I-19
YTW549RHT	I-16
YTW549RT	I-5
YTW549RT521REK	I-5
YTW549RT521REKHT	I-18
YTW549RT549REK	I-5
YTW549RT549REKHT	I-18
YTW549RT56REK	I-5
YTW549RT56REKHT	I-18
YTW549RTHT	I-18
YTW56R	I-3
YTW56R590REK	I-3
YTW56R590REKHT	I-16
YTW56RD	I-4
YTW56RD590REK	I-4
YTW56RD590REKHT	I-17
YTW56RDHT	I-17
YTW56RDT	I-6
YTW56RDT590REK	I-6
YTW56RDT590REKHT	I-19
YTW56RDTHT	I-19
YTW56RE	I-3, I-4, I-5, I-6
YTW56REHT	I-16, I-18, I-19
YTW56RHT	I-16
YTW56RT	I-5
YTW56RT590REK	I-5
YTW56RT590REKHT	I-18
YTW56RTHT	I-18
YTW58R	I-3
YTW58R58REK	I-3
YTW58R58REKHT	I-16
YTW58RD	I-4
YTW58RD58REK	I-4
YTW58RD58REKHT	I-17
YTW58RDHT	I-17
YTW58RDT	I-6
YTW58RDT58REK	I-6
YTW58RDT58REKHT	I-19
YTW58RDTHT	I-19
YTW58RE	I-3, I-4, I-6
YTW58REHT	I-16, I-17, I-19
YTW58RHT	I-16
YTW58RT	I-5
YTW58RT58REK	I-5
YTW58RT58REKHT	I-18
YTW58RTHT	I-18
YTW590RE	I-3, I-5, I-6
YTW590REHT	I-16, I-17, I-18
YTW591RE	I-3, I-4, I-5
YTW591REHT	I-16, I-17, I-19
YTW59R	I-3
YTW59R591REK	I-3
YTW59R591REKHT	I-16
YTW59R59REK	I-3
YTW59R59REKHT	I-16
YTW59RD	I-4
YTW59RD591REK	I-4
YTW59RD591REKHT	I-17
YTW59RD59REK	I-4
YTW59RD59REKHT	I-17
YTW59RDHT	I-17
YTW59RDT	I-6
YTW59RDT591REK	I-6
YTW59RDT591REKHT	I-19
YTW59RDT59REK	I-6
YTW59RDT59REKHT	I-19
YTW59RDTHT	I-19
YTW59RE	I-3, I-4, I-5
YTW59REHT	I-16, I-17, I-19
YTW59RHT	I-16
YTW59RT	I-5
YTW59RT591REK	I-5
YTW59RT591REKHT	I-18
YTW59RT59REK	I-5
YTW59RT59REKHT	I-18
YTW59RTHT	I-18
Z104C4034	K-36
Z104C4434	K-36
Z-11	K-57
Z144C4840	K-36
Z-15	K-57
Z1C28	K-34
Z1C29	K-33, K-34
Z1C30	K-33, K-34
Z1C32	K-33, K-34
Z1C34	K-33
Z-22.5	K-57
Z-25	K-57
Z2528	K-33, K-34
Z2529	K-33, K-34
Z2530	K-33, K-34
Z2532	K-33, K-34
Z2534	K-33, K-34
Z2536	K-34
Z2628	K-34
Z2629	K-33, K-34
Z2630	K-33, K-34
Z2632	K-33, K-34
Z2634	K-33, K-34
Z2636	K-34
Z2640	K-34
Z2728	K-33, K-34
Z2729	K-34
Z2730	K-33, K-34
Z2732	K-33, K-34
Z2734	K-33, K-34
Z2736	K-34
Z2740	K-34
Z2828	K-33
Z2829	K-33, K-34
Z2830	K-33, K-34
Z2832	K-33, K-34
Z2834	K-33, K-34
Z2836	K-34
Z2840	K-34
Z2844	K-34
Z28NR	K-32, K-35
Z2929	K-33, K-34
Z2930	K-33, K-34
Z2932	K-33, K-34
Z2934	K-33, K-34
Z2936	K-33, K-34
Z2940	K-33, K-34
Z2944	K-34
Z29NR	K-32, K-35
Z29P	K-31
Z2C28	K-33, K-34
Z2C29	K-33, K-34
Z2C30	K-33
Z2C32	K-33
Z2C34	K-33
Z2MLDN2-20	K-29
Z2MLDN2-30	K-29
Z2MLDN2-30B	K-29
Z2MLDN4-20	K-29
Z2MLDN4-30	K-29
Z2MLDN4-30B	K-29
Z2MLDN6-20	K-29
Z2MLDN6-30	K-29
Z2MLDN6-30B	K-29
Z-30	K-57
Z3030	K-33
Z3032	K-33
Z3034	K-33
Z3036	K-33
Z3040	K-33
Z30NR	K-32
Z3132	K-33
Z3134	K-33
Z3136	K-33
Z3140	K-33
Z3232	K-33, K-34
Z3234	K-33, K-34
Z3236	K-33, K-34
Z3240	K-33, K-34
Z3244	K-34
Z32NR	K-32, K-35
Z3334	K-33, K-34
Z3336	K-33, K-34
Z3340	K-33, K-34
Z3344	K-34
Z3434	K-33, K-34
Z3436	K-33, K-34
Z3440	K-33, K-34
Z3444	K-33, K-34
Z34NR	K-32, K-35
Z34NRB	K-32
Z34P	K-31
Z3536	K-33
Z3540	K-33
Z3544	K-33
Z3636	K-33, K-34
Z3640	K-33, K-34
Z3644	K-33, K-34
Z36NR	K-32, K-35
Z-37.5	K-57
Z3740	K-33
Z3744	K-33
Z3840	K-33
Z3844	K-33
Z3940	K-33
Z3944	K-33

ALPHA-NUMERIC INDEX BY CATALOG NUMBER (Continued)

Catalog Number	Page #
Z3C28	K-34
Z3ONR	K-35
Z4040	K-33
Z4044	K-33
Z40NR	K-32
Z40NRA	K-32
Z40P	K-31
Z4144	K-33
Z4244	K-33
Z4344	K-33
Z-44	K-57
Z4444	K-33
Z44NR	K-32
Z4C28	K-33
Z4C29	K-33
Z4C30	K-33
Z-50	K-57
Z6C28	K-33
Z6C29	K-33
Z6C30	K-33
Z-7.5	K-57
Z72C3029	K-36
Z88C3429	K-36
ZH50	K-57
ZM10-15	K-9
ZM10-25	K-15
ZM10-25B	K-15
ZM10-30	K-21
ZM10-30B	K-21
ZM12-15	K-9
ZM12-25	K-15
ZM12-25B	K-15
ZM12-30	K-21
ZM12-30B	K-21
ZM14-15	K-9
ZM14-25	K-15
ZM14-25B	K-15
ZM14-30	K-21
ZM14-30B	K-21
ZM16-15	K-9
ZM16-25	K-15
ZM16-25B	K-15
ZM16-30	K-21
ZM16-30B	K-21
ZM4-15	K-9
ZM4-25	K-15
ZM4-25B	K-15
ZM4-30	K-21
ZM4-30B	K-21
ZM6-15	K-9
ZM6-25	K-15
ZM6-25B	K-15
ZM6-30	K-21
ZM6-30B	K-21
ZM8-15	K-9
ZM8-25	K-15
ZM8-25B	K-15
ZM8-30	K-21
ZM8-30B	K-21
ZMDN3-20	K-30
ZMDN3-20B	K-30
ZMDN3-25	K-30
ZMDN4-20	K-30
ZMDN4-20B	K-30
ZMDN4-25	K-30
ZMDN5-20	K-30
ZMDN5-20B	K-30
ZMDN5-25	K-30
ZMDN6-20	K-30
ZMDN6-20B	K-30
ZMDN6-25	K-30
ZME2-15	K-11
ZME2-25	K-17
ZME2-25B	K-17
ZME230	K-23
ZME230B	K-23
ZME3-15	K-11
ZME3-25	K-17
ZME3-25B	K-17
ZME330	K-23
ZME330B	K-23
ZME4-15	K-11
ZME4-25	K-17
ZME4-25B	K-17
ZME430	K-23
ZME430B	K-23
ZME5-15	K-11
ZME5-25	K-17
ZME5-25B	K-17
ZME530	K-23
ZME530B	K-23
ZME6-15	K-11
ZME6-25	K-17
ZME6-25B	K-17
ZME630	K-23
ZME630B	K-23
ZME7-15	K-11
ZME7-25	K-17
ZME7-25B	K-17
ZME730	K-23
ZME730B	K-23
ZME8-15	K-11
ZME8-25	K-17
ZME8-25B	K-17
ZME830	K-23
ZME830B	K-23
ZMK10-15	K-14
ZMK10-15A3	K-14
ZMK10-15A4	K-14
ZMK10-25	K-20
ZMK10-25A4	K-20
ZMK10-25B	K-20
ZMK10-25B12	K-20
ZMK1030	K-26
ZMK1030B	K-26
ZMK4-15	K-14
ZMK4-15A3	K-14
ZMK4-15A4	K-14
ZMK4-25	K-20
ZMK4-25A4	K-20
ZMK4-25B	K-20
ZMK4-25B12	K-20
ZMK430	K-26
ZMK430B	K-26
ZMK5-15	K-14
ZMK5-15A3	K-14
ZMK5-15A4	K-14
ZMK5-25	K-20
ZMK5-25A4	K-20
ZMK5-25B	K-20
ZMK5-25B12	K-20
ZMK530	K-26
ZMK530B	K-26
ZMK6-15	K-14
ZMK6-15A3	K-14
ZMK6-15A4	K-14
ZMK6-25	K-20
ZMK6-25A4	K-20
ZMK6-25B	K-20
ZMK6-25B12	K-20
ZMK630	K-26
ZMK630B	K-26
ZMK7-15	K-14
ZMK7-15A3	K-14
ZMK7-15A4	K-14
ZMK7-25	K-20
ZMK7-25A4	K-20
ZMK7-25B	K-20
ZMK7-25B12	K-20
ZMK730	K-26
ZMK730B	K-26
ZMK8-15	K-14
ZMK8-15A3	K-14
ZMK8-15A4	K-14
ZMK8-25	K-20
ZMK8-25A4	K-20
ZMK8-25B	K-20
ZMK8-25B12	K-20
ZMK830	K-26
ZMK830B	K-26
ZMK9-15	K-14
ZMK9-15A3	K-14
ZMK9-15A4	K-14
ZMK9-25	K-20
ZMK9-25A4	K-20
ZMK9-25B	K-20
ZMK9-25B12	K-20
ZMK930	K-26
ZML0-15A3	K-12
ZML2-15	K-12
ZML2-15A3	K-12
ZML2-25	K-18
ZML2-25A3	K-18
ZML2-25B	K-18
ZML2-25B12	K-18
ZML2-30	K-24
ZML2-30B	K-24
ZML3-15	K-12
ZML3-15A3	K-12
ZML3-25	K-18
ZML3-25A3	K-18
ZML3-25B	K-18
ZML3-25B12	K-18
ZML3-30	K-24
ZML3-30B	K-24
ZML4-15	K-12
ZML4-15A3	K-12
ZML4-25	K-18
ZML4-25A3	K-18
ZML4-25B	K-18
ZML4-25B12	K-18
ZML4-30	K-24
ZML4-30B	K-24
ZML5-15	K-12
ZML5-15A3	K-12
ZML5-25	K-18
ZML5-25A3	K-18
ZML5-25B	K-18
ZML5-25B12	K-18
ZML5-30	K-24
ZML5-30B	K-24
ZML6-15	K-12
ZML6-15A3	K-12
ZML6-25	K-18
ZML6-25A3	K-18
ZML6-25B	K-18
ZML6-25B12	K-18
ZML6-30	K-24
ZML6-30B	K-24
ZML7-15	K-12
ZML7-15A3	K-12
ZML7-25	K-18
ZML7-25A3	K-18
ZML7-25B	K-18
ZML7-25B12	K-18
ZML7-30	K-24
ZML7-30B	K-24
ZML8-15	K-12
ZML8-25	K-18
ZML8-25A3	K-18
ZML8-25B	K-18
ZML8-25B12	K-18
ZML8-30	K-24
ZML8-30B	K-24
ZML9-15	K-12
ZML9-15A3	K-12
ZML9-25	K-18
ZML9-25A3	K-18
ZML9-25B	K-18
ZML9-25B12	K-18
ZML9-30	K-24
ZML9-30B	K-24
ZMLDN1-15	K-27
ZMLDN1-20	K-27
ZMLDN1-20B	K-27
ZMLDN1-25	K-28
ZMLDN1-25B	K-28
ZMLDN1-30	K-28
ZMLDN1-30B	K-28
ZMLDN2-15	K-27
ZMLDN2-20	K-27
ZMLDN2-20B	K-27
ZMLDN2-25	K-28
ZMLDN2-25B	K-28
ZMLDN2-30	K-28
ZMLDN2-30B	K-28
ZMLDN3-15	K-27
ZMLDN3-20	K-27
ZMLDN3-20B	K-27
ZMLDN3-25	K-28
ZMLDN3-25B	K-28
ZMLDN3-30	K-28
ZMLDN3-30B	K-28
ZMLDN4-15	K-27
ZMLDN4-20	K-27
ZMLDN4-20B	K-27
ZMLDN4-25	K-28
ZMLDN4-25B	K-28
ZMLDN4-30	K-28
ZMLDN4-30B	K-28

ALPHA-NUMERIC INDEX BY CATALOG NUMBER (Continued)

Catalog Number	Page #
ZMLDN5-15	K-27
ZMLDN5-20	K-27
ZMLDN5-20B	K-27
ZMLDN5-25	K-28
ZMLDN5-25B	K-28
ZMLDN5-30	K-28
ZMLDN5-30B	K-28
ZMLDN6-15	K-27
ZMLDN6-20	K-27
ZMLDN6-20B	K-27
ZMLDN6-25	K-28
ZMLDN6-25B	K-28
ZMLDN6-30	K-28
ZMLDN6-30B	K-28
ZMS29	K-35
ZMS34	K-35
ZMS40	K-35
ZMT11-15	K-10
ZMT11-15A3	K-10
ZMT11-25	K-16
ZMT11-25A3	K-16
ZMT11-25B	K-16
ZMT11-25B12	K-16
ZMT11-30	K-22
ZMT11-30B	K-22
ZMT13-15	K-10
ZMT13-15A3	K-10
ZMT13-25	K-16
ZMT13-25A3	K-16
ZMT13-25B	K-16
ZMT13-25B12	K-16
ZMT13-30	K-22
ZMT13-30B	K-22
ZMT15-15	K-10
ZMT15-15A3	K-10
ZMT15-25	K-16
ZMT15-25A3	K-16
ZMT15-25B	K-16
ZMT15-25B12	K-16
ZMT15-30	K-22
ZMT15-30B	K-22
ZMT17-15	K-10
ZMT17-15A3	K-10
ZMT17-25	K-16
ZMT17-25A3	K-16
ZMT17-25B	K-16
ZMT17-25B12	K-16
ZMT17-30	K-22
ZMT17-30B	K-22
ZMT3-15	K-10
ZMT3-15A3	K-10
ZMT3-25	K-16
ZMT3-258	K-16
ZMT3-25A3	K-16
ZMT3-25B12	K-16
ZMT3-30	K-22
ZMT3-30B	K-22
ZMT5-15	K-10
ZMT5-15A3	K-10
ZMT5-25	K-16
ZMT5-25A3	K-16
ZMT5-25B	K-16
ZMT5-25B12	K-16
ZMT5-30	K-22
ZMT5-30B	K-22
ZMT7-15	K-10
ZMT7-15A3	K-10
ZMT7-25	K-16
ZMT7-25A3	K-16
ZMT7-25B	K-16
ZMT7-25B12	K-16
ZMT7-30	K-22
ZMT7-30B	K-22
ZMT9-15	K-10
ZMT9-15A3	K-10
ZMT9-25	K-16
ZMT9-25A3	K-16
ZMT9-25B	K-16
ZMT9-25B12	K-16
ZMT9-30B	K-22
ZMTDN1015	K-31
ZMTDN81025	K-31
ZMTDN815	K-31
ZMTDN820	K-31
ZMX10-15	K-13
ZMX10-15A3	K-13
ZMX10-15A4	K-13
ZMX10-25	K-19
ZMX10-25A4	K-19
ZMX10-25B	K-19
ZMX10-25B12	K-19
ZMX10-30	K-25
ZMX10-30B	K-25
ZMX12-15	K-13
ZMX12-15A3	K-13
ZMX12-15A4	K-13
ZMX12-25	K-19
ZMX12-25A4	K-19
ZMX12-25B	K-19
ZMX12-25B12	K-19
ZMX12-30	K-25
ZMX14-15	K-13
ZMX14-15A3	K-13
ZMX14-15A4	K-13
ZMX14-25	K-19
ZMX14-25A4	K-19
ZMX14-25B	K-19
ZMX14-25B12	K-19
ZMX14-30	K-25
ZMX14-30B	K-25
ZMX16-15	K-13
ZMX16-15A3	K-13
ZMX16-15A4	K-13
ZMX16-25	K-19
ZMX16-25A4	K-19
ZMX16-25B	K-19
ZMX16-25B12	K-19
ZMX16-30	K-25
ZMX18-15	K-13
ZMX18-15A3	K-13
ZMX18-15A4	K-13
ZMX18-25	K-19
ZMX18-25A4	K-19
ZMX18-25B	K-19
ZMX18-25B12	K-19
ZMX18-30	K-25
ZMX18-30B	K-25
ZMX4-15	K-13
ZMX4-15A3	K-13
ZMX4-15A4	K-13
ZMX4-25	K-19
ZMX4-25A4	K-19
ZMX4-25B	K-19
ZMX4-25B12	K-19
ZMX4-30	K-25
ZMX4-30B	K-25
ZMX6-15	K-13
ZMX6-15A3	K-13
ZMX6-15A4	K-13
ZMX6-25	K-19
ZMX6-25A4	K-19
ZMX6-25B	K-19
ZMX6-25B12	K-19
ZMX6-30	K-25
ZMX6-30B	K-25
ZMX8-15	K-13
ZMX8-15A3	K-13
ZMX8-15A4	K-13
ZMX8-25	K-19
ZMX8-25A4	K-19
ZMX8-25B	K-19
ZMX8-25B12	K-19
ZMX8-30	K-25
ZMX8-30B	K-25

		INSTALLATION TOOLING SYSTEM												
Conductor		LUGS & SPLICES One & Two HOLE			T&B Index	TAPS Thin-Wall C-taps Run=Tap, AWG only			TAPS Heavy Duty C-Taps Run=Tap			TAPS H-Taps Run=Tap		
AWG	FLEX	Die	Color	Index	Code (Flex)	Die	Color	Index	Die	Color	Index	Die	Color	Index
#8/#6 sol	#8	W8CVT U8CRT	RED	49	21	W4CVT	GRAY	8	U240	RED	240	U11T-1	GREEN	11
#6	#6	W5CVT U5CRT	BLUE	7	24	W2CVT	BROWN	10	UC	BROWN	C	UBGRT	ORANGE	BG
#4	#4	W4CVT U4CRT	GRAY	8	29	W25VT	PINK	12	UC	BROWN	C	UC	BROWN	C
#3/#2 sol		W3CRT U3CRT	WHITE	9		W26VT	BLACK	13	UC	BROWN	C	UC	BROWN	C
#2	#2	W2CVT U2CRT	BROWN	10	33	W27VT	ORANGE	14	UC	BROWN	C	UC	BROWN	C
#1	#1	W1CVT U1CRT-1	GREEN	11		W28VT	PURPLE	15	U997	ORANGE	997	U654	PURPLE	654
1/0	1/0	W25VT U25RT	PINK	12	42 (45)	W29VT	YELLOW	16	U997	ORANGE	997	U654	PURPLE	654
2/0	2/0	W26VT U26RT	BLACK	13	45 (50)		REFER TO CATALOG		U997	ORANGE	997	U654	PURPLE	654
3/0	3/0	W27VT U27RT	ORANGE	14					U997	ORANGE	997	U654	PURPLE	654
4/0	4/0	W28VT U28RT	PURPLE	15	54 (62)	-	-	-	U997	ORANGE	997	U654	PURPLE	654
250	4/0/ 250 class G & H	W29VT U29RT	YELLOW	16		-	-	-	U997	ORANGE	997	U654	PURPLE	654
300	262/ 250 class I, K & M	W30VT U30RT	WHITE	17		-	-	-	U1104	BROWN	1104	U1104	BROWN	1104
350	313	W31VT U31RT	RED	18	71	-	-	-	U1104	BROWN	1104	U1104	BROWN	1104
	350/ 373	W32VT U32RT	BLUE	19		-	-	-	U1104	BROWN	1104	U1104	BROWN	1104
500	444	W34VT U34RT	BROWN	20	87	-	-	-	U1104	BROWN	1104	U1104	BROWN	1104
	500/ 535	U38XRT	PINK	L99		-	-	-	P1103	BLUE	1103	PYFR	YELLOW	KR
600		U36RT	GREEN	22	(99)	-	-	-	P1103	BLUE	1103	PYFR	YELLOW	KR
700		U38RT	PINK	400		-	-	-	P1103	BLUE	1103	PYFR	YELLOW	KR
750	646	U39RT	BLACK	24	106	-	-	-	P1103	BLUE	1103	PYFR	YELLOW	KR
	750/ 777	U44XRT P44XRT-1	YELLOW	L115										
800		P40RT	ORANGE	25	(115)	-	-	-	P1102	WHITE	1102	PYFR	YELLOW	KR
1000		P44RT	WHITE	27		-	-	-	P1102	WHITE	1102	PYFR	YELLOW	KR

Trust the BURNDY® Engineered System

The BURNDY® Engineered System of coordinating dies, connectors and tools are always designed to work together and engineered to meet stringent, accepted quality standards.

Dies and connectors + **Tools** = **Safe, easy and inspectable connection**

CELEBRATING 90 YEARS BURNDY

www.burndy.com | 1-800-346-4175

Customer Service Department
7 Aviation Park Drive
Londonderry, NH 03053
1-800-346-4175
1-800-451-4956 (Technical Services)
1-603-647-5299 (International)

Canada
1-800-361-6975 (Quebec)
1-800-387-6487 (All other provinces)

Mexico
011-52-722-265-4400

Brazil
011-55-11-5515-7225

Tool Service Center
Littleton Industrial Park
Littleton, NH 03561
1-800-426-8720

BURNDY®

Item # 591717

HUBBELL®

© BURNDY LLC, 2013