TYPE 1

- Type 1 Galvanized & Painted Screw Cover Knockout and Hinge Boxes ... 4 - 6
- Type 1 Galvanized & Painted Screw Cover Wireway and Fittings ... 7 - 9
- Type 1 Painted X-Ray Duct ... 10
- Type 1 Hinged Painted Enclosures with Panel ... 11
- Type 1 Telephone Cabinets Commercial Style ... 12
- Type 1 Transformer Cabinets - Painted ... 13
- Type 1 Spare Fuse Cabinets - Painted ... 13

TYPE 3

- Type 3 & Type 12 Screw Cover "Gasketed" Boxes - Painted ... 14
- Type 3 & Type 12 Stainless Steel Screw Cover "Gasketed" Boxes ... 15
- Type 3 & Type 12 Alumimum Screw Cover "Gasketed" Boxes ... 16
- Type 3 Gasketed Flush Mounted Heavy Duty Floor Boxes ... 16
- Type 3 & Type 12 Screw Cover "Gasketed" Wiring Trough - Painted ... 17

TYPE 3R

- Type 3R Galvanized & Painted Rainproof Boxes ... 18
- Type 3R Galvanized & Painted Rainproof Wiring Trough ... 19
- Type 3R Small - Hinged Cover Painted Enclosures ... 20
- Type 3R Hinged-Cover Painted Enclosures ... 21
- Type 3R Hinged CT Painted Cabinet ... 22
- Type 3R Double Door Wall Mount Hinged Painted Enclosure ... 23
- Type 3R Single Door Freestanding Painted Enclosure ... 24
- Type 3R Double Door Freestanding Painted Enclosure ... 25
- Type 3R Double Door Floor Mount Hinged Painted Enclosure ... 26
- Non-UL Listed Transformer Housing Cabinets ... 27

TYPE 4

- Type 4 Painted Hinged Trough ... 28
- Type 4 & 12 JIC Continuous Hinge Painted Boxes ... 29
- Type 4 Single Door with 3 Point Latch ... 30
- Type 4 Single Door Painted Enclosures ... 31
- Type 4 Single Door Free Standing with 3 Point Latch ... 32
- Type 4 Freestanding Painted Enclosures ... 33
- Type 4 Double Door Free Standing with 3 Point Latch ... 34
- Type 4 Double Door Wall Mount with 3 Point Latch ... 35
- Type 4 Double Door Floor Mount with 3 Point Latch ... 36
- Type 4 Double Door Floor Mounted Painted Enclosures ... 37
- Type 4 & 12 Hinged Painted Enclosures ... 38-39
- Type 4 Flange Mounted Disconnect Enclosure ... 40

TYPE 4X

- Type 4X Stainless Steel Screw Cover "Gasketed" Boxes ... 41
- Type 4X Aluminum Screw Cover "Gasketed" Boxes ... 42
- Type 4X & 12 Stainless Steel JIC Continuous Hinge Enclosures ... 43
- Type 4X Stainless Steel JIC Clamp Cover Enclosures ... 44
- Type 4X Stainless Steel Single Door Enclosure with 3 Point Latch ... 45
- Type 4X Stainless Steel Single Door Enclosures ... 46
- Type 4X Stainless Steel Freestanding Single Door Enclosure with 3 Point Latch ... 47
- Type 4X Stainless Steel Double Door Wall Mount Enclosure with 3 Point Latch ... 48
- Type 4X Stainless Steel Double Door Floor Mount Enclosure with 3 Point Latch ... 49
- Type 4X Stainless Steel Double Door Floor Mounted Enclosures ... 50
- Type 4X Stainless Steel Freestanding Double Door Enclosure with 3 Point Latch ... 51
- Type 4X Stainless Steel JIC Hinged Trough ... 52
- Type 4X Stainless Steel Flange Mounted Disconnect Enclosure ... 53
- Type 4X Stainless Steel Pull Through Wireway ... 54
- Type 4X Aluminum JIC Continuous Hinged Enclosures ... 55
- Type 4X Aluminum Single Door Continuous Hinge Enclosures ... 56
- Type 4X Polycarbonate Screw Cover Boxes ... 57
- Type 4X Polycarbonate Hinged Screw Cover Boxes ... 58
- Type 4X Polycarbonate Hinged Quick Release Latch ... 59
- Type 4X Fiberglass Pushbutton Enclosures ... 60
- Type 4X Fiberglass Screw Cover Boxes ... 61
- Type 4X Fiberglass Hinged Screw Cover Boxes ... 62
- Type 4X Fiberglass Hinged with Twist Latch ... 63
- Type 4X Fiberglass Large Hinged Enclosures with Twist Latch ... 64
- Type 4X Fiberglass Hinged Freestanding Enclosures ... 65

TYPE 12

- Type 12 & 4 Small JIC Continuous Hinge Painted Boxes ... 66
- Type 12 Large JIC Continuous Hinge Painted Boxes ... 67
- Type 12 JIC Screw Cover Painted Boxes ... 68
- Type 12 Single Door Painted Enclosures ... 69-70
- Type 12 Double Door Wall Mount Painted Enclosures ... 71
- Type 12 Double Door Floor Mount Painted Enclosures ... 72
- Type 12 Freestanding Single Door Painted Enclosures ... 73
- Type 12 Freestanding Single Door Dual Accesss Painted Enclosures ... 74
- Type 12 Freestanding Double Door Painted Enclosures ... 75
- Type 12 Freestanding Double Door Dual Access Painted Enclosures ... 76
- Type 12 Multi Door Painted Enclosures ... 77
- Type 12 Flange Mounted Disconnect Enclosures ... 78-79
- Type 12 JIC Hinged Painted Trough ... 80
- Type 12 JIC Pull Thru Painted Wireway ... 81-82
- Type 12 Standard Push Buttons Enclosures ... 83
- Type 12 Slim Push Button Enclosure ... 84
- Type 12 Extra Large Push Button Enclosure with Hinged Cover ... 85
- Type 12 Oil Tight Consoles ... 86
- Type 12 Series 9 Consoles & Accessories ... 87

Accessories

- Oil Tight Hole Seals ... 88
- Handles & Latching Systems ... 89
- Louver Plate Kits (Painted) & Type 1 Flush Covers ... 90
- Floor Stand Kits & Drip Shield Kits ... 91
- Painted Panels for - Type 12 and 3R Enclosures ... 92
- Aluminum & Stainless Panels for Type 4 - Type 12 and Type 3R Enclosures ... 93
- Galvanlized Panels for Type 4 - Type 12 and Type 3R Encloures ... 94

Conditions of Sale

Terms: Net 30 days.

Minimum Billing: Orders less than one hundred (100) dollars will incur a ten (10) dollar service charge.

Freight Allowed Amounts: Call your local sales representative or the factory direct.

Liability: E-Box liability is limited to the correction or replacement of defective goods. Under no circumstances, however, will we be held responsible for any amount beyond the price of the product or any unauthorized " field " repair.

Delivery / Loss Damage: FOB shipping point E-Box. E-Box cannot be held responsible for breakage after received in "good order" receipts for transportation company. All claims for loss and damage must be made by the purchaser to the carrier. After transfer of our goods to the transportation company, we relinquish responsibility for all damages.

Material Return: No goods may be returned without first obtaining express written permission. Goods that arrive without permission will be refused and returned to shipper at shippers cost. Only stock items recently invoiced (within 60 days) may be returned. Upon receipt of material, a credit memo will be issued for the original price, less a minimum 20% restocking fee and transportation charges original paid by E-Box. Large quantities of stock items asking for return RGA will require an additional restocking charge. Specialty items are not returnable under any circumstances. Aluminum and stainless steel items are not eligible for return.

Cancellations: An order placed with us may be cancelled with our expressed approval and subject to terms that will protect us from loss. Although, if material is special or if quantity exceeds standard inventory, the order may not be cancelled once order is placed in production.

Additional Charges: All Shipments, with the exceptions of freight allowed minimum amounts as herein above stated, shall have an additional charge added to the freight charges. Said additional charges for UPS shall be in the amount of $10.00 plus insurance charges in $.30 increments for each $100.00 declared value over the first $100.00. Additional charges of $15.00 shall be added to all motor freight shipments under the freight allowed amounts. All one-day overnight shipments, i.e., Federal Express, Emery and UPS RED shall incur an additional charge of $15.00. On any customer requested partial shipment, the customer will be responsible for freight charges incurred.

Quotation: Written and verbal quotations will automatically expire thirty (30) days from the date of quote.

PLEASE SEND ALL PURCHASE ORDERS VIA E-MAIL TO sales@e-boxenclosures.com

E-Box will do everything possible to maintain the delivery date given herein, but shall not be liable for delay due to cause beyond its reasonable control, such as to obtain necessary labor or materials. E-Box shall not be liable, in any event or under any circumstances, for consequential damages.

Underwriters Laboratories, Inc.

(UL 50, 508, and 870)

Canadian Underwriters Laboratories, Inc.

(CUL 50, 508 and 870)

Intended	Intended Use and Description
Type 1:	Indoor use primarily to provide protection against contact with the enclosed equipment and against a limited amount of falling dirt.
Type 3:	Outdoor use to provide a degree of protection against wind blown dust and wind blown rain; undamaged by the formation of ice on the enclosure.
Type 3R:	Outdoor use to provide a degree of protection against falling rain; undamaged by the formation of ice on the enclosure.
Type 4:	Either indoor or outdoor use to provide a degree of protection against falling rain, splashing water, hose directed water; undamaged by the formation of ice on the enclosure.
Type 4X:	Either indoor or outdoor use to provide a degree of protection against falling rain, splashing water, hose directed water; undamaged by the formation of ice on the enclosure; resists corrosion.
Type 12:	Indoor use to provide a degree of protection against dust, dirt, fiber flyings, dripping water, and external condensation of noncorrosive liquids.
Type 13:	Enclosures constructed for indoor use to provide a degree of protection to personnel against incidental contact with the enclosed equipment to provide a degree of protection against falling dirt; against circulating dust, lint, fibers, and flyings; and against the spraying, splashing, and seepage of water, oil, and non-corrosive coolants.

This material reproduced with the permission from Underwriters Laboratories, Inc., Standard for Safety Cabinets and Boxes, UL 50, Copyright 1985, and Industrial Control Equipment, UL 508, Copyright 1984 by Canadians Underwrite Laboratories, Inc.

This material reproduced with the permission from Canadian Underwriters Laboratories, Inc., Standard for Safety Cabinets and Boxes, UL 50, Copyright 1985, and Industrial Control Equipment, CUL 508, Copyright 1993 by Canadian Underwriters Laboratories, Inc.

Underwriters Laboratories, Inc., (UL) shall not be responsible to anyone for the use of or reliance upon a UL standard by anyone. UL shall not incur any obligation or liability for damages, including consequential damages, arising out of or connection with the use interpretation of, or reliance upon a UL standard.

Canadian Underwriters Laboratories, Inc., (UL) shall not be responsible to anyone for the use of or reliance upon a CUL standard by anyone. CUL shall not incur any obligation or liability for damages, including consequential damages, arising out of or connection with the use interpretation of, or reliance upon a CUL standard.

Underwriters Laboratories, Inc. Standard for Safety Cabinets and Boxes, CUL 50, and standard for safety for Industrial control Equipment, CUL 508

E-Box classifications of Electrical Enclosures UL and CUL approved are as follows:

Nema Type 1, 3 , 3R , 4 , 4X , 12, 13 and fiberglass enclosures.

GALVANIZED AND PAINTED TYPE 1 BOXES

Screw Cover, Screw Cover w/KO's, Hinge Cover, Hinge Cover w/KO's

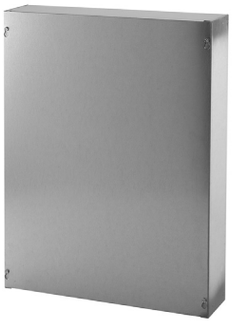

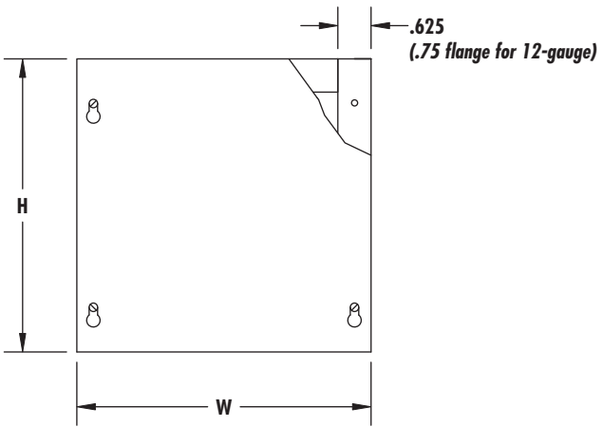

TYPE 1 SCREW COVER

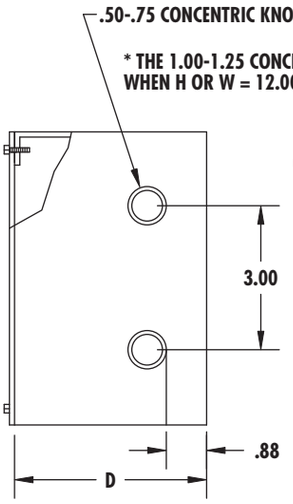

TYPE 1 SCREW COVER WITH KNOCKOUTS

c UL us LISTED

CONSTRUCTION:
- CODE GAUGE G-60 or G-90 GALVANIZED STEEL
- REMOVABLE COVER FASTENED WITH PLATED STEEL SCREWS
- KEYHOLE SCREW SLOTS IN THE COVER PERMIT THE REMOVAL OF THE COVER WITHOUT EXTRACTING THE SCREWS

FINISH:
- E-BOX TYPE 1 SCREW COVER BOXES ARE PROVIDED IN GALVANIZED G-60 or G-90 OR ANSI 61 GRAY POLYESTER POWDER COATING INSIDE AND OUT OVER PAINT GRIP GALVANIZED STEEL

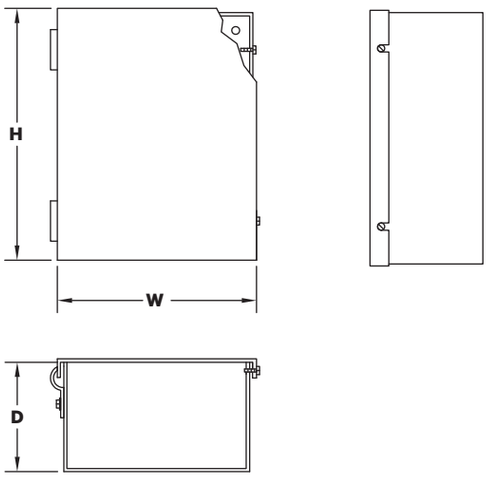

TYPE 1 HINGE SCREW COVER

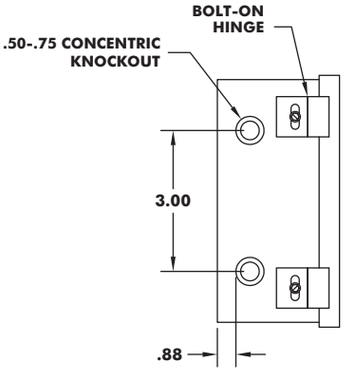

*** THE 1.00-1.25 CONCENTRIC KNOCKOUT IS USED WHEN H OR W = 12.00 INCHES OR MORE. ***

c UL us LISTED

CONSTRUCTION:
- CODE GAUGE G-60 or G-90 GRADE GALVANIZED STEEL
- HINGE COVERS ARE FASTENED WITH STEEL PLATED SCREWS
- BOLT-ON HINGE COVERS HAVE A FORMED STEEL ON SMALLER BOXES AND A BUTT HINGE ON LARGER HINGE BOXES

FINISH:
- E-BOX TYPE 1 SCREW COVER BOXES ARE PROVIDED IN GALVANIZED G-60 or G-90 OR ANSI 61 GRAY POLYESTER POWDER COATING INSIDE AND OUT OVER PAINT GRIP GALVANIZED STEEL

GALVANIZED AND PAINTED TYPE 1 BOXES

Screw Cover, Screw Cover w/KO's, Hinge Cover, Hinge Cover w/KO's

GALVANIZED

SC Suffix = Galvanized Screw Cover
NOTE: Replace "**SC**" suffix with:
SCKO ..... Galvanized Screw cover w/KO's
HC ..... Galvanized Hinge cover
HCKO ..... Galvanized Hinge cover w/KO's

PAINTED

SC Suffix = Galvanized Screw Cover
NOTE: Replace "**SC**" suffix with:
SCP .....Painted Screw Cover
SCPKO .....Painted Screw cover w/KO's
HCP .....Painted Hinge cover
HCPKO .....Painted Hinge cover w/KO's

Enclosure Size HxWxD	Catalog Number	Weight
4x4x4	444SC	2
6x4x4	644SC	2
6x6x4	664SC	3
8x6x4	864SC	4
8x8x4	884SC	5
10x6x4	1064SC	5
10x8x4	1084SC	5
10x10x4	10104SC	7
12x6x4	1264SC	6
12x8x4	1284SC	6
12x10x4	12104SC	7
12x12x4	12124SC	9
15x12x4	15124SC	11
15x15x4	15154SC	14
16x16x4	16164SC	16
18x12x4	18124SC	13
18x15x4	18154SC	16
18x18x4	18184SC	17
24x12x4	24124SC	15
24x18x4	24184SC	23
24x24x4	24244SC	35
30x24x4	30244SC	43
36x24x4	36244SC	51
6x6x6	666SC	4
8x6x6	866SC	5
8x8x6	886SC	6
10x8x6	1086SC	7
10x10x6	10106SC	9
12x8x6	1286SC	9
12x10x6	12106SC	10
12x12x6	12126SC	11
15x12x6	15126SC	13
15x15x6	15156SC	16
16x16x6	16166SC	18
18x12x6	18126SC	16
18x15x6	18156SC	17
18x18x6	18186SC	20
24x12x6	24126SC	21
24x18x6	24186SC	26
24x24x6	24246SC	39
30x24x6	30246SC	48
30x30x6	30306SC	56
36x24x6	36246SC	81
36x30x6	36306SC	94
* 36x36x6	36366SC	110
48x24x6	48246SC	101
* 48x36x6	48366SC	128
* 48x48x6	48486SC	234

NOTE: * Size **not** available with KO'S

FOR LARGE QUANTITIES CALL FACTORY

Continue on next Page

GALVANIZED AND PAINTED TYPE 1 BOXES

Screw Cover, Screw Cover w/KO's, Hinge Cover, Hinge Cover w/KO's

GALVANIZED

SC Suffix = Galvanized Screw Cover
NOTE: Replace "**SC**" suffix with:
SCKO . . . . . Galvanized Screw cover w/KO's
HC . . . . . Galvanized Hinge cover
HCKO . . . . . Galvanized Hinge cover w/KO's

PAINTED

SC Suffix = Galvanized Screw Cover
NOTE: Replace "**SC**" suffix with:
SCP . . . . . .Painted Screw Cover
SCPKO . . . . . .Painted Screw cover w/KO's
HCP . . . . . .Painted Hinge cover
HCPKO . . . . . .Painted Hinge cover w/KO's

Enclosure Size HxWxD	Catalog Number	Weight
8x8x8	888SC	7
10x10x8	10108SC	10
12x12x8	12128SC	12
15x12x8	15128SC	15
15x15x8	15158SC	17
18x12x8	18128SC	17
18x15x8	18158SC	20
18x18x8	18188SC	23
24x12x8	24128SC	23
24x18x8	24188SC	29
24x24x8	24248SC	42
30x24x8	30248SC	51
30x30x8	30308SC	88
36x24x8	36248SC	60
36x30x8	36308SC	102
* 36x36x8	36368SC	119
48x24x8	48248SC	110
* 48x36x8	48368SC	159
* 48x48x8	48488SC	249
12x12x10	121210SC	14
18x12x10	181210SC	19
18x18x10	181810SC	25
24x18x10	241810SC	31
24x24x10	242410SC	48
30x30x10	303010SC	96
30x24x10	302410SC	56
36x24x10	362410SC	67
36x30x10	363010SC	111
* 36x36x10	363610SC	128
* 48x36x10	483610SC	171
* 48x48x10	484810SC	265
12x12x12	121212SC	16
18x12x12	181212SC	21
18x18x12	181812SC	28
24x12x12	241212SC	27
24x18x12	241812SC	34
24x24x12	242412SC	53
30x30x12	303012SC	103
36x24x12	362412SC	70
* 36x36x12	363612SC	137
* 48x36x12	483612SC	179
* 48x48x12	484812SC	280

NOTE: * Size **not** available with KO'S

FOR LARGE QUANTITIES CALL FACTORY

GALVANIZED AND PAINTED TYPE 1 SCREW COVER WIREWAY AND FITTINGS

TYPE 1

GALVANIZED

SW Suffix = Galvanized Screw Cover Wireway
NOTE: Replace "**SW**" suffix with:
SWKO ..... Galvanized Screw cover w/KO's
HW ..... Galvanized Hinge cover
HWKO ..... Galvanized Hinge cover w/KO's

PAINTED

SW Suffix = Galvanized Screw Cover Wireway
NOTE: Replace "**SW**" suffix with:
SWP ..... Painted Screw cover
SWPKO ..... Painted Screw cover w/KO's
HWP ..... Painted Hinge cover
HWPKO ..... Painted Hinge cover w/KO's
Painted Fittings .... Add "**P**" to catalog #

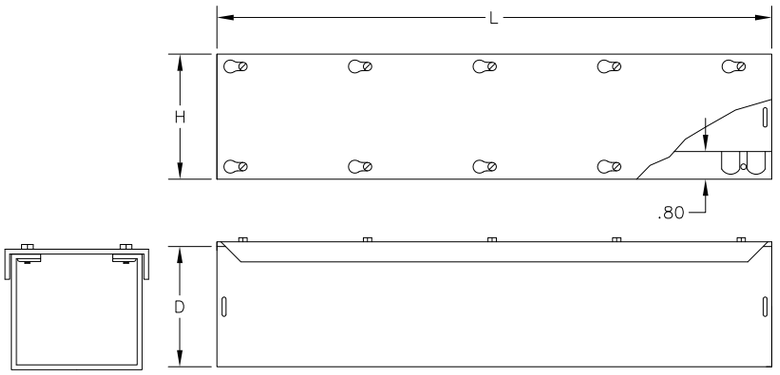

c UL us LISTED

CONSTRUCTION:
- CODE GAUGE G-60 or G-90 GALVANIZED STEEL
- REMOVABLE COVERS FASTENED WITH PLATED STEEL SCREWS
- KEYHOLE SCREW SLOTS IN THE COVER PERMIT THE REMOVAL OF THE COVER WITHOUT EXTRACTING THE SCREWS
- FITTINGS CAN BE OPENED ON ANY SIDE TO PERMIT THE LAYING IN OF ENTIRE RUNS OF WIRING
- EMBOSSED & EXTRUDED TAPPED HOLES PROTECTS WIRE FROM DAMAGE BY SCREWS
- AVAILABLE IN FLAT COVER UPON REQUEST

FINISH:
- E-BOX SCREW COVER WIREWAY ARE PROVIDED IN GALVANIZED G-60 or G-90 OR ANSI 61 GRAY POLYESTER POWDER COATING INSIDE AND OUT OVER PAINT GRIP GALVANIZED STEEL

Wireway Size HxDxL	Catalog Number	Weight
4x4x12	1-44SW	3
4x4x24	2-44SW	7
4x4x36	3-44SW	10
4x4x48	4-44SW	14
4x4x60	5-44SW	17
4x4x72	6-44SW	20
4x4x84	7-44SW	25
4x4x96	8-44SW	29
4x4x120	10-44SW	35
90º Elbow-T-Cross	4-90TC	5
End Cap	4-EC	.5
U Connector	4-UC	.3
Panel Adapter	4-PA	1
Reducer	4-R	.5
Drop & Bracket Hanger	4-H	2
45º L	4-45L	4
90º L	4-90L	5
Horizontal 90º Elbow	4-H90LSW	4
Tee	4-T	5
4x120 Divider	10-44D	17

FOR LARGE QUANTITIES CALL FACTORY

Continue on next Page

GALVANIZED & PAINTED TYPE 1 SCREW COVER WIREWAY AND FITTINGS

GALVANIZED

SW Suffix = Galvanized Screw Cover Wireway
NOTE: Replace "**SW**" suffix with:
SWKO ..... Galvanized Screw cover w/KO's
HW ..... Galvanized Hinge cover
HWKO ..... Galvanized Hinge cover w/KO's

PAINTED

SW Suffix = Galvanized Screw Cover Wireway
NOTE: Replace "**SW**" suffix with:
SWP .....Painted Screw cover
SWPKO .....Painted Screw cover w/KO's
HWP .....Painted Hinge cover
HWPKO .....Painted Hinge cover w/KO's
PAINTED FITTINGS.....Add "P" to catalog #

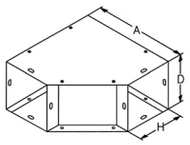

90° ELBOW

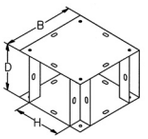

90° ELBOW-T-CROSS

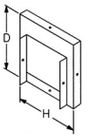

REDUCER

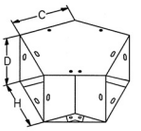

45° ELBOW

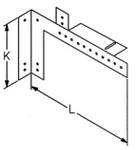

BRACKET HANGER

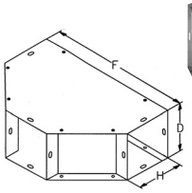

TEE

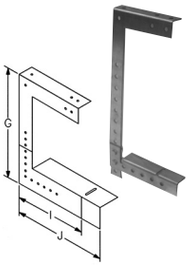

DROP HANGER

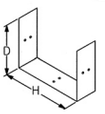

U-CONNECTOR

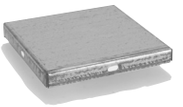
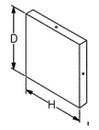

END CAP

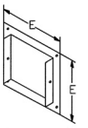

PANEL ADAPTER

HORIZONTAL
90° ELBOW

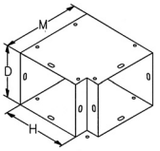

SIZE	–H–	–D–	–A–	–B–	–C–	–E–	–F–	–G–	–I–	–J–	–K–	–L–	–M–
4X4	4	4	8	6	4.60	5.50	12	10.50	4.12	6.00	4.50	9.25	6.00
6X6	6	6	12	8	5.43	7.50	18	15.00	5.12	7.12	5.50	13.75	8.00
8X8	8	8	14	10	6.25	9.50	20	21.00	7.00	10.81	7.75	13.75	10.00
10X10	10	10	16	12	7.12	11.50	22	22.00	8.38	13.18	10.25	13.75	12.00
12X12	12	12	18	14	7.94	13.50	24	23.00	9.78	15.56	12.50	13.75	14.00

Wireway Size HxDxL	Catalog Number	Weight
6x6x12	1-66SW	5
6x6x24	2-66SW	10
6x6x36	3-66SW	15
6x6x48	4-66SW	20
6x6x60	5-66SW	25
6x6x72	6-66SW	30
6x6x84	7-66SW	39
6x6x96	8-66SW	44
6x6x120	10-66SW	50
90º Elbow - T - Cross	6-90TC	7
End Cap	6-EC	1
U Connector	6-UC	.5
Panel Adapter	6-PA	2
Reducer	6-R	2
Drop & Bracket Hanger	6-H	2
45º L	6-45L	5
90º L	6-90L	7
Horizontal 90º Elbow	6-H90LSW	5
Tee	6-T	8
6x120 Divider	10-66D	22

FOR LARGE QUANTITIES CALL FACTORY

Continue on next Page

GALVANIZED AND PAINTED TYPE 1 SCREW COVER WIREWAY AND FITTINGS

Wireway Size HxDxL	Catalog Number	Weight
8x8x12	1-88SW	7
8x8x24	2-88SW	16
8x8x36	3-88SW	25
8x8x48	4-88SW	33
8x8x60	5-88SW	41
8x8x72	6-88SW	50
8x8x84	7-88SW	64
8x8x96	8-88SW	73
8x8x120	10-88SW	88
90º Elbow - T - Cross	8-90TC	12
End Cap	8-EC	2
U Connector	8-UC	1
Panel Adapter	8-PA	2
Reducer	8-R	2
Drop & Bracket Hanger	8-H	3
45º L	8-45L	10
90º L	8-90L	12
Horizontal 90º Elbow	8-H90LSW	10
Tee	8-T	14
8x120 Divider	10-88D	28
10x10x12	1-1010SW	10
10x10x24	2-1010SW	20
10x10x36	3-1010SW	30
10x10x48	4-1010SW	40
10x10x60	5-1010SW	50
10x10x72	6-1010SW	60
10x10x84	7-1010SW	70
10x10x96	8-1010SW	80
10x10x120	10-1010SW	100
90º Elbow - T - Cross	10-90TC	18
End Cap	10-EC	2.5
U Connector	10-UC	2
Panel Adapter	10-PA	3
Reducer	10-R	2
Drop & Bracket Hanger	10-H	5
45º L	10-45L	14
90º L	10-90L	18
Horizontal 90º Elbow	10-H90LSW	14
Tee	10-T	20
10x120 Divider	10-1010D	33
12x12x12	1-1212SW	13
12x12x24	2-1212SW	26
12x12x36	3-1212SW	38
12x12x48	4-1212SW	51
12x12x60	5-1212SW	63
12x12x72	6-1212SW	75
12x12x84	7-1212SW	99
12x12x96	8-1212SW	112
12x12x120	10-1212SW	126
90º Elbow - T - Cross	12-90TC	24
End Cap	12-EC	3
U Connector	12-UC	2
Panel Adapter	12-PA	3
Reducer	12-R	2
Drop & Bracket Hanger	12-H	6
45º L	12-45L	19
90º L	12-90L	24
Horizontal 90º Elbow	12-H90LSW	19
Tee	12-T	26
12x120 Divider	10-1212D	39

FOR LARGE QUANTITIES CALL FACTORY

TYPE 1 – PAINTED - X-RAY DUCT

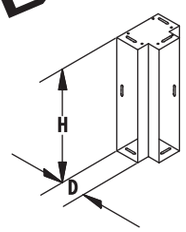

VERTICAL TEE

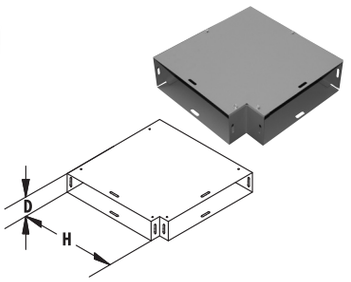

HORIZONTAL 90° ELBOW

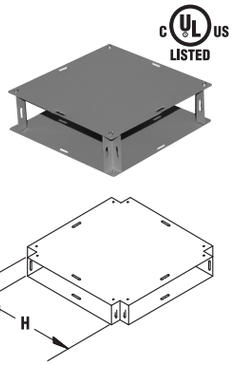

CROSS

c UL us LISTED

CONSTRUCTION:
- CODE GAUGE PAINT GRIP GALVANIZED STEEL
- FLAT REMOVABLE COVERS FASTENED WITH PLATED STEEL SCREWS
- FITTINGS CAN BE OPENED ON ANY SIDE TO PERMIT THE LAYING IN OF ENTIRE RUNS OF WIRING

FINISH:
- ANSI 61 GRAY POLYESTER POWDER COATING INSIDE AND OUT

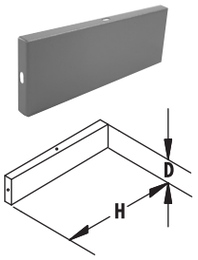

END CAP

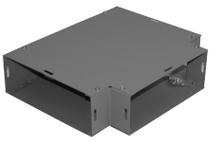

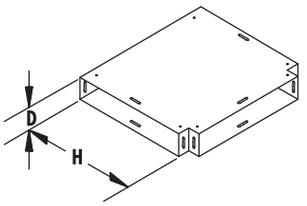

HORIZONTAL TEE

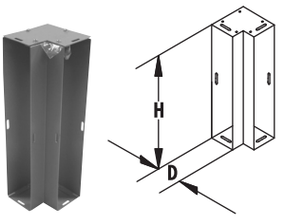

VERTICAL 90° ELBOW

Wireway Size HxDxL	Catalog Number	Weight
10x3.5 x12	1-103X	7
10x3.5 x24	2-103X	15
10x3.5 x36	3-103X	22
10x3.5 x48	4-103X	30
10x3.5 x60	5-103X	37
10x3.5 x72	6-103X	45
10x3.5 x84	7-103X	52
10x3.5 x96	8-103X	60
10x3.5 x120	10-103X	73
Cross	10-CX	8
Horizontal Tee	10-HT	7
Vertical Tee	10-VT	7
Horizontal 90L	10-H90L	8
Vertical 90L	10-V90L	7
60" Divider	60-D	5
End Cap	10-ECX	1
U Connector	10-UCX	1
Panel Adapter	10-PAX	2
18x3.5 x12	1-183X	12
18x3.5 x24	2-183X	23
18x3.5 x36	3-183X	35
18x3.5 x48	4-183X	47
18x3.5 x60	5-183X	58
18x3.5 x72	6-183X	70
18x3.5 x84	7-183X	81
18x3.5x96	8-183X	93
18x3.5 x120	10-183X	117
Cross	18-CX	24
Horizontal Tee	18-HT	23
Vertical Tee	18-VT	23
Horizontal 90L	18-H90L	23
Vertical 90L	18-V90L	11
60" Divider	60-D	5
End Cap	18-ECX	2
U Connector	18-UCX	2
18 to 10 Reducer	18-RX	2
Panel Adapter	18-PAX	3

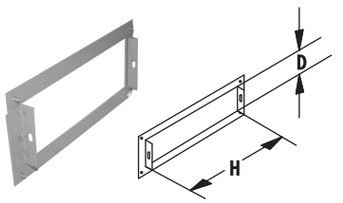

PANEL ADAPTER

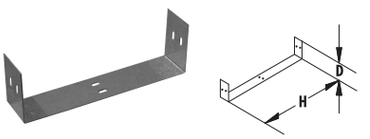

U-CONNECTOR

DIVIDER

STRAIGHT SECTION

FOR LARGE QUANTITIES CALL FACTORY

TYPE 1- HINGED-PAINTED-ENCLOSURES WITH PAINTED PANEL

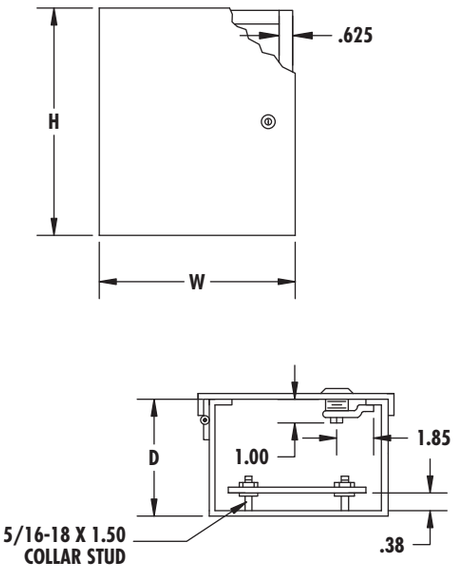

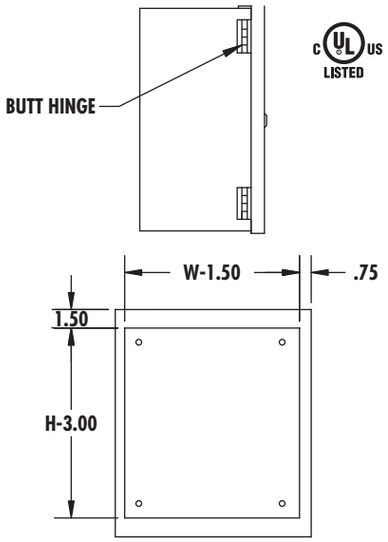

c UL us LISTED

CONSTRUCTION:
- 16 AND 14 GAUGE PAINT GRIP GALVANIZED STEEL
- BUTT HINGE
- NEARLY FLUSH NON LOCKING LATCH, HOLDS DOOR SECURELY CLOSED
- REMOVABLE PAINTED PANEL

FINISH:
- ANSI 61 GRAY POLYESTER POWDER COATING INSIDE AND OUT

Optional Keylocking Latch

Replace "**HL**" suffix with "**HLL**" for Keylocking Latch

Enclosure Size HxWxD	Catalog Number	Weight
* 6x6x4.63	664HL	5
* 8x8x4.63	884HL	7
* 10x8x4.63	1084HL	8
* 8x8x6.63	886HL	7
* 10x8x6.63	1086HL	9
* 10x10x6.63	10106HL	10
* 12x10x6.63	12106HL	12
* 12x12x6.63	12126HL	15
* 14x12x6.63	14126HL	16
16x12x6.63	16126HL	18
16x16x6.63	16166HL	27
20x16x6.63	20166HL	27
20x20x6.63	20206HL	33
24x16x6.63	24166HL	39
24x20x6.63	24206HL	44
24x24x6.63	24246HL	53
30x20x6.63	30206HL	60
30x24x6.63	30246HL	68
36x24x6.63	36246HL	84
36x30x6.63	36306HL	97
12x12x8.63	12128HL	17
14x12x8.63	14128HL	18
16x12x8.63	16128HL	20
20x16x8.63	20168HL	30
20x20x8.63	20208HL	36
24x20x8.63	24208HL	42
24x24x8.63	24248HL	57
30x20x8.63	30208HL	65
30x24x8.63	30248HL	69
30x30x8.63	30308HL	85
36x24x8.63	36248HL	87
36x30x8.63	36308HL	97
42x24x8.63	42248HL	104
24x20x10.63	242010HL	45
30x24x10.63	302410HL	83
36x30x10.63	363010HL	111
24x24x12.63	242412HL	66
30x24x12.63	302412HL	83
36x30x12.63	363012HL	110

NOTE: * 10-32 x 7/16 Standoff Replaces Collar Studs

FOR LARGE QUANTITIES CALL FACTORY

TYPE 1 TELEPHONE CABINETS COMMERCIAL STYLE

NOTE: For Flush cover Add "**F**" After Catalog Number

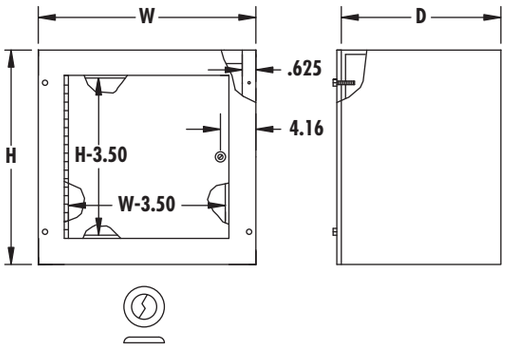

NEARLY FLUSH
KEYLOCKING LATCH

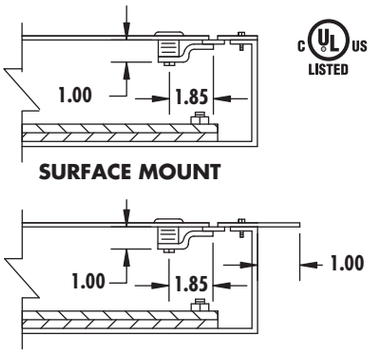

SURFACE MOUNT

FLUSH MOUNT

c UL us LISTED

CONSTRUCTION:
- CODE GAUGE PAINT GRIP GALVANIZED STEEL
- REMOVABLE TRIM
- CONTINUOUS HINGE
- OPTIONAL 3/4 PLY-WOOD BACK PANEL
- KEYHOLE SCREW SLOTS IN THE COVER PERMIT THE REMOVAL OF THE COVER WITHOUT EXTRACTING THE SCREWS

FINISH:
- ANSI 61 GRAY POLYESTER POWDER COATING INSIDE AND OUT

SURFACE MOUNT

FLUSH MOUNT

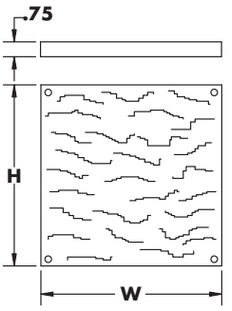

TELEPHONE CABINETS			3/4" PLYWOOD PANELS	
Enclosure Size HxWxD	Catalog Number	Weight	Catalog Number	Weight
12x12x4	12124TC	11	1212PW	1
16x12x4	16124TC	13	1612PW	1
18x12x4	18124TC	15	1812PW	1
24x12x4	24124TC	22	2412PW	2
18x18x4	18184TC	23	1818PW	2
24x18x4	24184TC	28	2418PW	3
24x24x4	24244TC	35	2424PW	4
30x24x4	30244TC	40	3024PW	5
30x30x4	30304TC	60	3030PW	6
36x24x4	36244TC	57	3624PW	6
36x30x4	36304TC	71	3630PW	7
48x30x4	48304TC	101	4830PW	8
16x12x6	16126TC	14	1612PW	1
18x12x6	18126TC	18	1812PW	1
24x12x6	24126TC	23	2412PW	2
18x18x6	18186TC	25	1818PW	2
24x18x6	24186TC	30	2418PW	3
24x24x6	24246TC	37	2424PW	4
30x24x6	30246TC	45	3024PW	5
36x24x6	36246TC	59	3624PW	6
30x30x6	30306TC	62	3030PW	6
36x30x6	36306TC	78	3630PW	7
48x30x6	48306TC	124	4830PW	8
48x36x6	48366TC	150	4836PW	12

FOR LARGE QUANTITIES CALL FACTORY

TRANSFORMER CABINETS TYPE 1 PAINTED

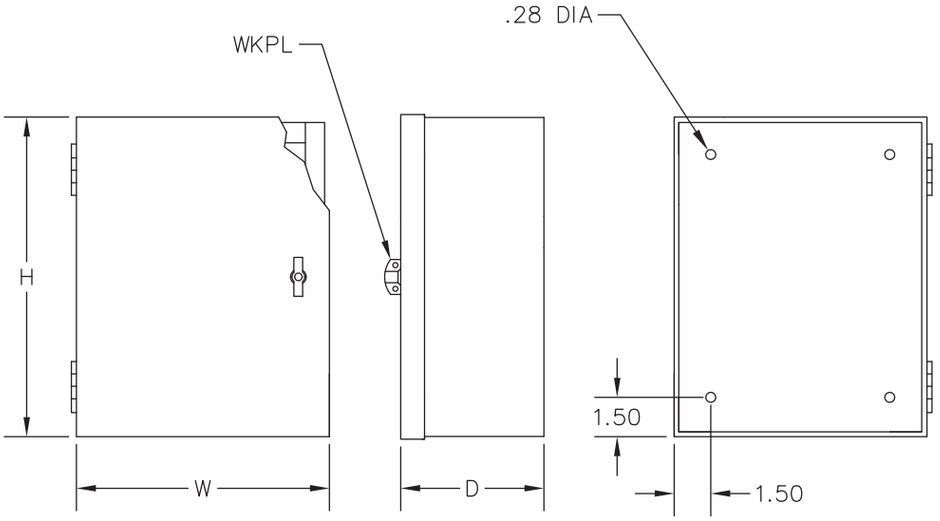

CONSTRUCTION:
- CODE GAUGE PAINT GRIP GALVANIZED STEEL
- BUTT HINGE
- SINGLE DOOR CABINETS ARE FURNISHED WITH A HASP
- TWO DOOR CABINETS HAVE A 3-POINT PADLOCKING HANDLE
- HOLES ARE PROVIDED IN BACK FOR MOUNTING

FINISH:
- ANSI 61 GRAY POLYESTER POWDER COATING INSIDE AND OUT

Enclosure Size HxWxD	Catalog Number	Weight
24x24x10	242410CT	55
30x24x10	302410CT	65
30x30x10	303010CT	96
36x24x10	362410CT	75
36x30x10	363010CT	111
36x36x10	363610CT	128
DOUBLE DOOR		
30x36x10	D303610CT	122
36x36x10	D363610CT	135
36x48x10	D364810CT	221
48x48x10	D484810CT	281

SPARE FUSE CABINET

CONSTRUCTION:
- 14 GAUGE PAINT GRIP GALVANIZED STEEL
- BUTT HINGE
- KEY LOCKING WING KNOB

FINISH:
- ANSI 61 GRAY POLYESTER POWDER COAT INSIDE AND OUT

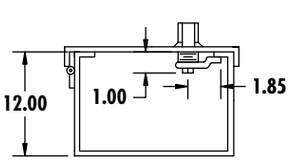

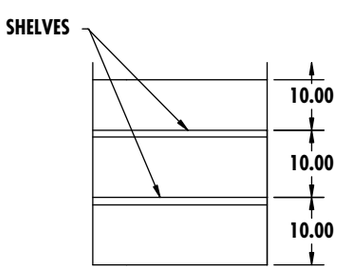

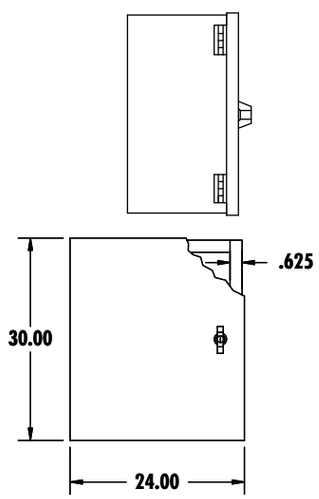

Enclosure Size HxWxD	Catalog Number	Weight
30X24X12	302412SFC	90

TYPE 3 & TYPE 12 SCREW COVER "GASKETED" BOXES - PAINTED

TYPE 3

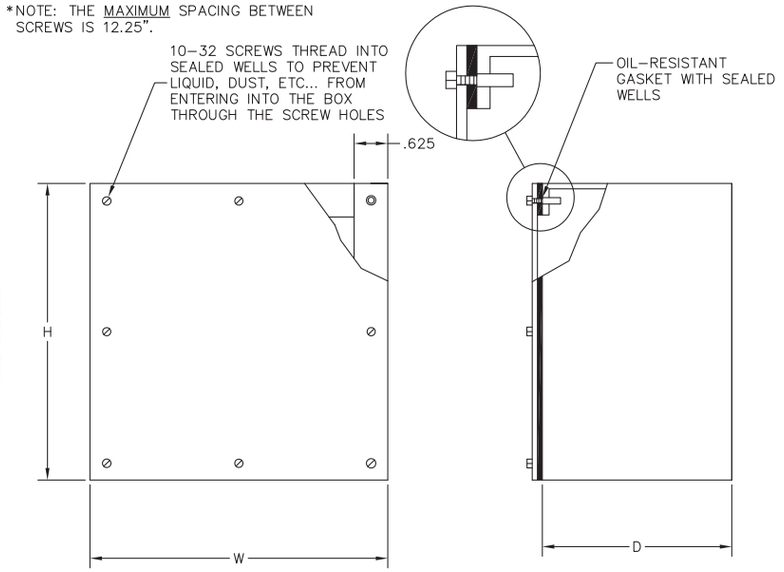

CONSTRUCTION:
- CODE GAUGE PAINT GRIP GALVANIZED STEEL
- SEAMS CONTINUOUSLY WELDED AND GROUND SMOOTH
- REMOVABLE COVER FASTENED WITH PLATED STEEL SCREWS

FINISH:
- ANSI 61 GRAY POLYESTER POWDER COATING INSIDE AND OUT

Enclosure Size HxWxD	Catalog Number	Weight
4x4x4	444SG	2
6x6x4	664SG	3
8x6x4	864SG	4
8x8x4	884SG	5
10x8x4	1084SG	5
10x10x4	10104SG	7
12x10x4	12104SG	7
12x12x4	12124SG	9
6x6x6	666SG	4
8x8x6	886SG	6
12x6x6	1266SG	7
10x10x6	10106SG	9
12x12x6	12126SG	11
15x12x6	15126SG	13
15x15x6	15156SG	16
18x18x6	18186SG	20
24x18x6	24186SG	26
24x24x6	24246SG	39
8x8x8	888SG	7
12x12x8	12128SG	12
18x18x8	18188SG	23
24x24x8	24248SG	42
30x24x8	30248SG	51
36x24x8	36248SG	60
30x30x8	30308SG	88
36x30x8	36308SG	102
18x18x10	181810SG	25
24x24x10	242410SG	48
30x24x10	302410SG	58
36x24x10	362410SG	67
30x30x10	303010SG	96
36x30x10	363010SG	111
18x18x12	181812SG	28
24x24x12	242412SG	53
30x30x12	303012SG	103
36x36x12	363612SG	137

FOR LARGE QUANTITIES CALL FACTORY

TYPE 3 & TYPE 12 STAINLESS STEEL SCREW COVER "GASKETED" BOXES

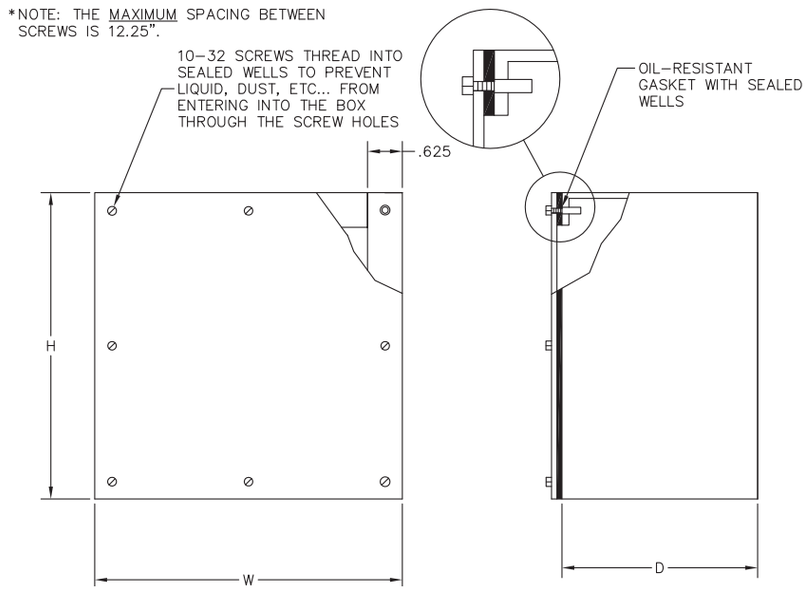

c UL us LISTED

CONSTRUCTION:
- CODE GAUGE TYPE 304 STAINLESS STEEL
- SEAMS CONTINUOUSLY WELDED AND GROUND SMOOTH
- REMOVABLE COVER FASTENED WITH STAINLESS STEEL SCREWS

FINISH:
- ENCLOSURES HAVE A BRUSHED FINISH

TYPE 3

Enclosure Size HxWxD	Catalog Number	Weight
4x4x4	S444SG	2
6x6x4	S664SG	3
8x6x4	S864SG	4
8x8x4	S884SG	5
10x10x4	S10104SG	7
10x8x4	S1084SG	6
12x10x4	S12104SG	8
12x12x4	S12124SG	10
6x6x6	S666SG	4
8x8x6	S886SG	6
10x10x6	S10106SG	8
12x12x6	S12126SG	11
15x12x6	S15126SG	13
15x15x6	S15156SG	15
18x18x6	S18186SG	20
24x18x6	S24186SG	26
24x24x6	S24246SG	39
8x8x8	S888SG	7
12x12x8	S12128SG	12
18x18x8	S18188SG	23
24x24x8	S24248SG	42
30x24x8	S30248SG	46
30x30x8	S30308SG	86
36x24x8	S36248SG	61
36x30x8	S36308SG	103
18x18x10	S181810SG	24
24x24x10	S242410SG	48
30x24x10	S302410SG	51
30x30x10	S303010SG	95
36x24x10	S362410SG	67
18x18x12	S181812SG	27
24x24x12	S242412SG	51
30x30x12	S303012SG	103
36x36x12	S363612SG	136

NOTE: For **316L** Stainless Steel replace **"SG"** suffix with **SG-6**

TYPE 3 & TYPE 12 ALUMINUM SCREW COVER "GASKETED" BOXES

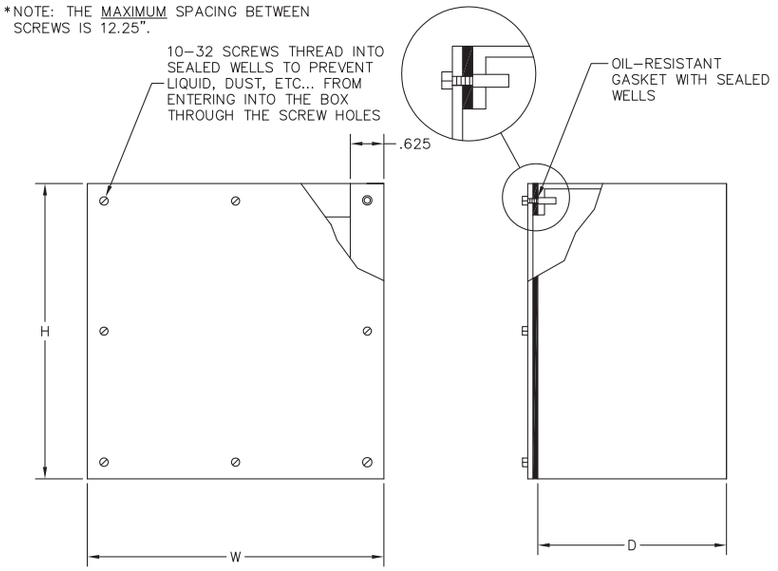

c UL us LISTED

CONSTRUCTION:
- TYPE 5052 H-32.080 ALUMINUM
- SEAMS CONTINUOUSLY WELDED AND GROUND SMOOTH
- REMOVABLE COVER FASTENED WITH STAINLESS STEEL SCREWS

FINISH:
- ENCLOSURES HAVE BRUSHED FINISH

Enclosure Size HxWxD	Catalog Number	Weight
6x6x4	A664SG	1.4
8x6x4	A864SG	1.8
8x8x4	A884SG	2.2
10x8x4	A1084SG	2.6
10x10x4	A10104SG	3
12x12x4	A12124SG	4
8x8x6	A886SG	2.8
10x8x6	A1086SG	3.3
12x10x6	A12106SG	4.3
12x12x6	A12126SG	4.8
18x12x6	A18126SG	7
24x18x6	A24186SG	11
24x24x6	A24246SG	14
12x12x8	A12128SG	6
18x18x8	A18188SG	9
24x24x8	A24248SG	15

TYPE 3 GASKETED SCREW COVER FLUSH MOUNTED HEAVY DUTY FLOOR BOXES

Enclosure Size HxWxD	Catalog Number	Weight
6x6x4	664FB	12
8x8x4	884FB	16
12x12x6	12126FB	33
18x18x6	18186FB	64
24x24x6	24246FB	88

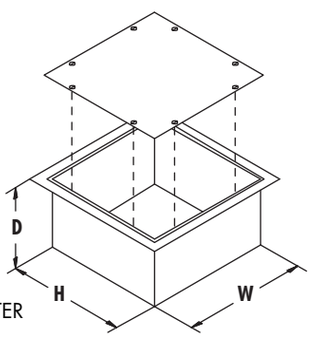

- ANSI 61 GRAY POLYESTER POWDER COATING INSIDE AND OUT

FOR LARGE QUANTITIES CALL FACTORY

TYPE 3 & TYPE 12 SCREW COVER "GASKETED" WIRING TROUGH - PAINTED

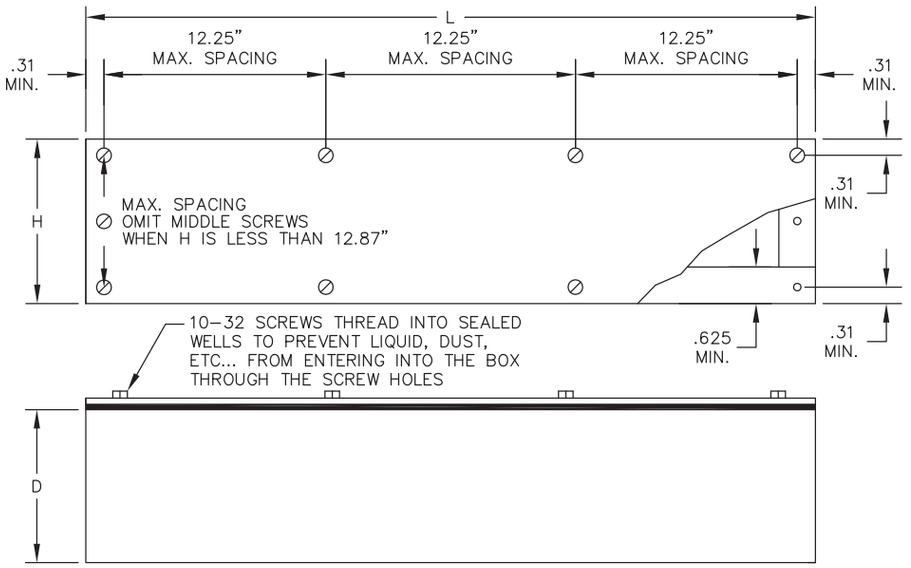

CONSTRUCTION:
- CODE GAUGE PAINT GRIP GALVANIZED STEEL
- SEAMS CONTINUOUSLY WELDED AND GROUND SMOOTH
- FLAT REMOVABLE COVERS FASTENED WITH PLATED STEEL SCREWS

FINISH:
- ANSI-61 GRAY POLYESTER POWDER COATING INSIDE AND OUT

TYPE 3

Trough Size HxDxL	Catalog Number	Weight
4x4x12	1-44GT	4
4x4x24	2-44GT	8
4x4x36	3-44GT	11
4x4x48	4-44GT	15
4x4x60	5-44GT	20
6x6x24	2-66GT	12
6x6x36	3-66GT	17
6x6x48	4-66GT	22
6x6x60	5-66GT	28
6x6x72	6-66GT	33
6x6x84	7-66GT	39
6x6x96	8-66GT	45
8x8x24	2-88GT	20
8x8x36	3-88GT	29
8x8x48	4-88GT	37
8x8x60	5-88GT	46
8x8x72	6-88GT	55
8x8x84	7-88GT	65
8x8x96	8-88GT	72
8x8x120	10-88GT	88
10x10x24	2-10GT	27
10x10x36	3-10GT	30
10x10x48	4-10GT	47
10x10x60	5-10GT	58
10x10x72	6-10GT	69
10x10x96	8-10GT	91
10x10x120	10-10GT	112
12x12x24	2-12GT	33
12x12x36	3-12GT	45
12x12x48	4-12GT	58
12x12x60	5-12GT	71
12x12x72	6-12GT	84
12x12x96	8-12GT	110
12x12x120	10-12GT	135

FOR LARGE QUANTITIES CALL FACTORY

GALVANIZED AND PAINTED TYPE 3R RAINPROOF BOXES

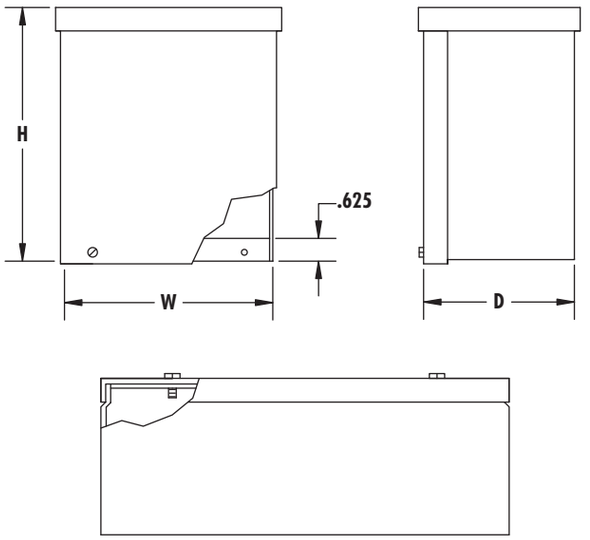

c UL us LISTED

CONSTRUCTION:
- CODE GAUGE G-90 GALVANIZED STEEL
- DRIP SHIELD TOP, FRONT, SIDES, AND BACK PROTECT FROM FALLING RAIN, SNOW, OR SLEET
- SLIDE-ON REMOVABLE COVER FASTENED WITH PLATED STEEL SCREWS ALONG BOTTOM EDGE

FINISH:
- E–BOX TYPE 3R SCREW COVER BOXES ARE PROVIDED PROVIDED IN G-90 GALVANIZED STEEL OR ANSI-61 GRAY POLYESTER POWDER COATING INSIDE AND OUT OVER PAINT GRIP GALVANIZED STEEL

TYPE 3R

NOTE: For painted replace **"RB"** suffix with **RBP**
NOTE: For KO'S, replace suffix with **"RBKO"** or **"RBPKO"**

Enclosure Size HxWxD	Catalog Number	Weight
6x6x4	664RB	4
8x6x4	864RB	4
8x8x4	884RB	5
10x8x4	1084RB	66
12x8x4	1284RB	77
10x10x4	10104RB	77
12x12x4	12124RB	10
6x6x6	666RB	4
8x8x6	886RB	6
10x8x6	1086RB	8
10x10x6	10106RB	9
12x10x6	12106RB	11
12x12x6	12126RB	12
15x12x6	15126RB	13
18x12x6	18126RB	16
18x15x6	18156RB	19
18x18x6	18186RB	21
24x18x6	24186RB	33
24x24x6	24246RB	40
12x12x8	12128RB	13
18x15x8	18158RB	20
18x18x8	18188RB	23
24x18x8	24188RB	35
24x24x8	24248RB	44
30x24x8	30248RB	56
24x24x10	242410RB	48
18x18x12	181812RB	37
24x18x12	241812RB	48
24x24x12	242412RB	56
36x24x12	362412RB	72
36x30x12	363012RB	101
36x36x12	363612RB	183

FOR LARGE QUANTITIES CALL FACTORY

GALVANIZED AND PAINTED TYPE 3R RAINPROOF WIRING TROUGH

NOTE: For painted, replace **"RT"** suffix with **RTP**

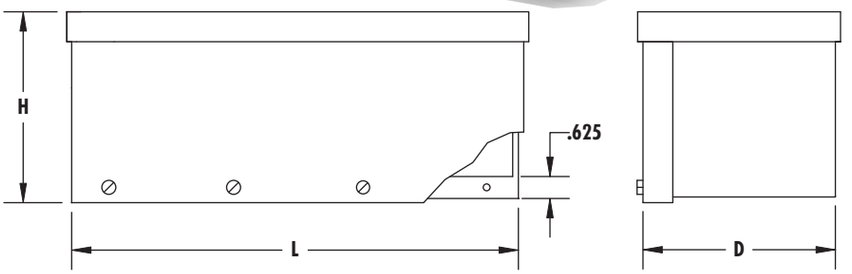

c UL us LISTED

CONSTRUCTION:
- CODE GAUGE G-90 GALVANIZED STEEL
- DRIP SHIELD TOP, FRONT,AND BACK PROTECT FROM FALLING RAIN, SNOW OR SLEET
- SLIDE-ON REMOVABLE COVER FASTENED WITH PLATED STEEL SCREWS ALONG BOTTOM EDGE

FINISH:
- E-BOX TYPE 3R WIRING TROUGHS ARE PROVIDED STANDARD IN GALVANIZED STEEL G-90 OR ANSI 61 GRAY POLYESTER POWDER COATING INSIDE AND OUT OVER PAINT GRIP GALVANIZED STEEL

TYPE 3R

Trough Size HxDxL	Catalog Number	Weight
4x4x12	1-44RT	5
4x4x24	2-44RT	9
4x4x36	3-44RT	14
4x4x48	4-44RT	18
4x4x60	5-44RT	22
4x4x72	6-44RT	28
4x4x84	7-44RT	32
4x4x96	8-44RT	37
4x4x120	10-44RT	48
6x6x12	1-66RT	7
6x6x24	2-66RT	13
6x6x36	3-66RT	19
6x6x48	4-66RT	25
6x6x60	5-66RT	31
6x6x72	6-66RT	39
6x6x84	7-66RT	45
6x6x96	8-66RT	51
6x6x120	10-66RT	57
8x8x24	2-88RT	22
8x8x36	3-88RT	31
8x8x48	4-88RT	40
8x8x60	5-88RT	49
8x8x72	6-88RT	58
8x8x84	7-88RT	68
8x8x96	8-88RT	79
8x8x120	10-88RT	94
10x10x36	3-10RT	37
10x10x48	4-10RT	48
10x10x60	5-10RT	56
10x10x72	6-10RT	70
10x10x84	7-10RT	83
10x10x96	8-10RT	94
10x10x120	10-10RT	117
12x12x36	3-12RT	46
12x12x48	4-12RT	59
12x12x60	5-12RT	72
12x12x72	6-12RT	86
12x12x84	7-12RT	100
12x12x96	8-12RT	115
12x12x120	10-12RT	140

FOR LARGE QUANTITIES CALL FACTORY

SMALL TYPE 3R HINGED COVER-PAINTED ENCLOSURES - LESS PANEL

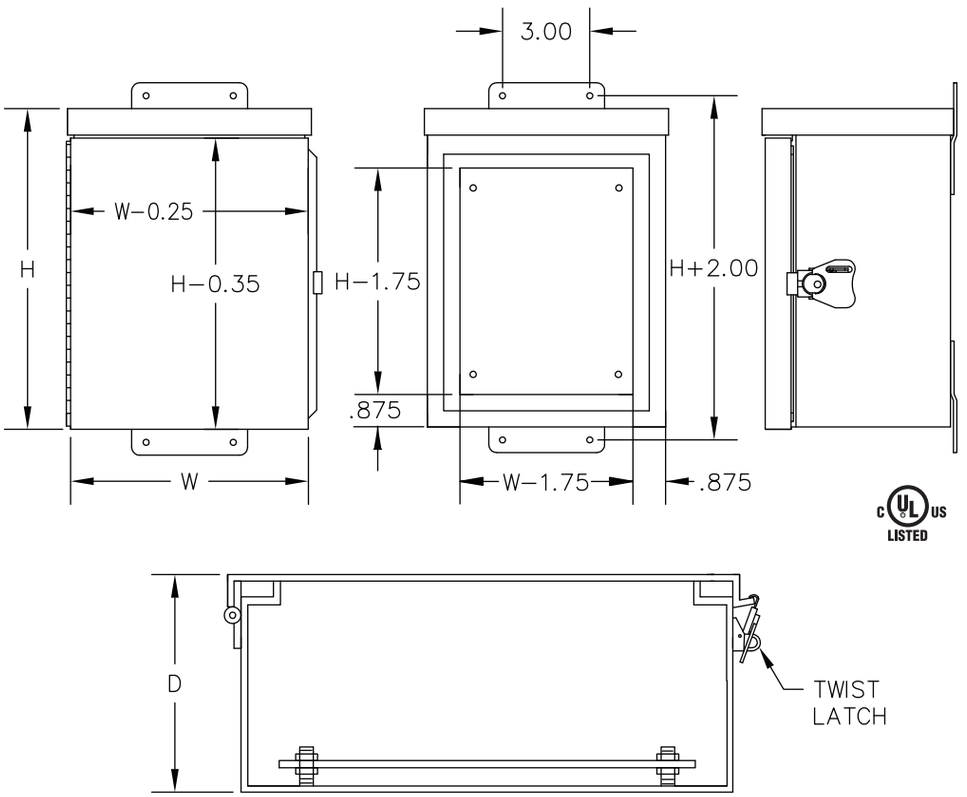

c UL us LISTED

CONSTRUCTION:
- 16 GAUGE PAINT GRIP GALVANIZED STEEL
- DRIP SHIELD TOP, FRONT, BACK, AND SIDES PROTECT FROM RAIN, SNOW, OR SLEET
- CONTINUOUS HINGE
- PLATED STEEL PADLOCKABLE TWIST LATCH ASSURES WATER TIGHT SEAL
- STUDS PROVIDED FOR MOUNTING OPTIONAL PANEL

FINISH:
- ANSI 61 GRAY POLYESTER POWDER COATING INSIDE AND OUT

SMALL TYPE 3R HINGED			STEEL PANEL (WHITE)	
Enclosure Size HxWxD	Catalog Number	Weight	Catalog Number	Weight
6x6x4	664RES	5	66PRES	1
8x6x4	864RES	6	86PRES	1
8x8x6	886RES	8	88PRES	1
10x8x6	1086RES	8	108PRES	.5
10x10x6	10106RES	9	1010PRES	1.5
12x10x6	12106RES	11	1210PRES	2
12x12x6	12126RES	14	1212PRES	2
14x12x6	14126RES	16	1412PRES	3

TYPE 3R-HINGED COVER-PAINTED ENCLOSURES – LESS PANEL WITH KEYLOCKING WING KNOB

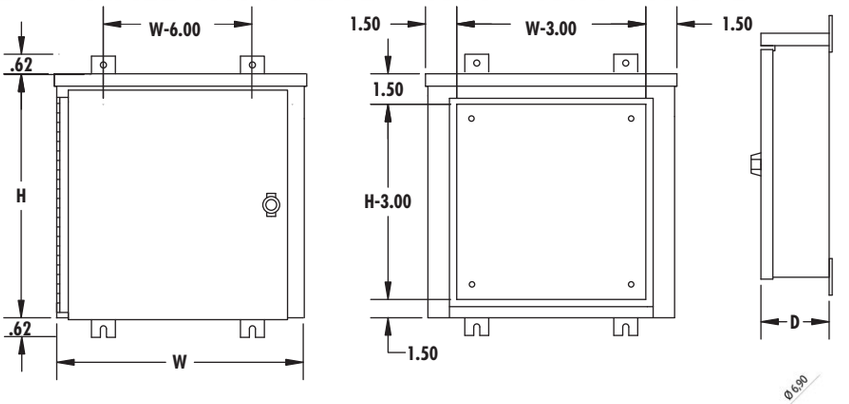

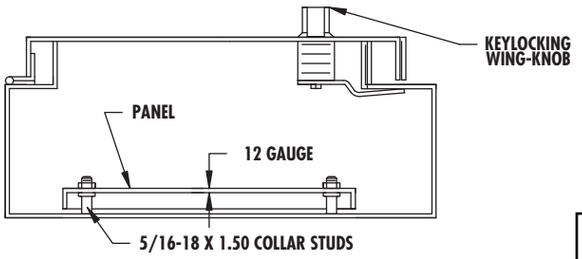

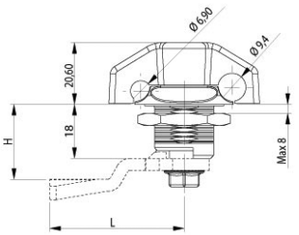

NOTE: Optional padlocking wing knob add **"PL"** After Catalog Number

CONSTRUCTION:
- CODE GAUGE PAINT GRIP GALVANIZED STEEL
- DRIP SHIELD TOP, FRONT, BACK, AND SIDES PROTECT FROM FALLING RAIN, SNOW, OR SLEET
- CONTINUOUS HINGE
- COVER FASTENED SECURELY WITH KEY-LOCKING WING KNOB
- STUDS PROVIDED FOR MOUNTING OPTIONAL PANEL

FINISH:
- ANSI 61 GRAY POLYESTER POWDER COATING INSIDE AND OUT

TYPE 3R

TYPE 3R HINGED			3/4" PLYWOOD PANEL		STEEL PANEL	
Enclosure Size HxWxD	Catalog Number	Weight	Catalog Number	Weight	Catalog Number	Weight
16x12x6	16126RE	20	1612PW	1	1612P	4
16x16x6	16166RE	23	1616PW	2	1616P	6
20x16x6	20166RE	27	2016PW	2	2016P	9
24x18x6	24186RE	40	2418PW	3	2418P	12
24x24x6	24246RE	50	2424PW	4	2424P	15
36x36x6	36366RE	105	3636PW	8	3636P	37
20x20x8	20208RE	43	2020PW	3	2020P	10
24x20x8	24208RE	48	2420PW	3	2420P	13
24x24x8	24248RE	54	2424PW	4	2424P	15
30x24x8	30248RE	64	3024PW	5	3024P	19
36x24x8	36248RE	60	3624PW	6	3624P	24
36x30x8	36308RE	97	3630PW	7	3630P	30
36x36x8	36368RE	111	3636PW	8	3636P	37
48x36x8	48368RE	125	4836PW	12	4836P	49
24x24x10	242410RE	56	2424PW	4	2424P	15
36x24x10	362410RE	74	3624PW	6	3624P	24
36x36x10	363610RE	115	3636PW	8	3636P	37
24x24x12	242412RE	61	2424PW	4	2424P	15
30x30x12	303012RE	88	3030PW	6	3030P	19
36x24x12	362412RE	88	3624PW	6	3624P	24
36x30x12	363012RE	98	3630PW	7	3630P	30
36x36x12	363612RE	113	3636PW	8	3636P	37
42x30x12	423012RE	111	4230PW	8	4230P	35
42x36x12	423612RE	126	4236PW	10	4236P	43
48x36x12	483612RE	139	4836PW	12	4836P	49
60x36x12	603612RE	165	6036PW	17	6036P	61
DOUBLE DOOR						
48x48x10	DW484810RE	264	DW4848PW	17	DW4848P	80
48x48x12	DW484812RE	280	DW4848PW	17	DW4848P	80

FOR LARGE QUANTITIES CALL FACTORY

TYPE 3R-HINGED CT CABINET
LESS PANEL WITH PADLOCKING WING KNOB

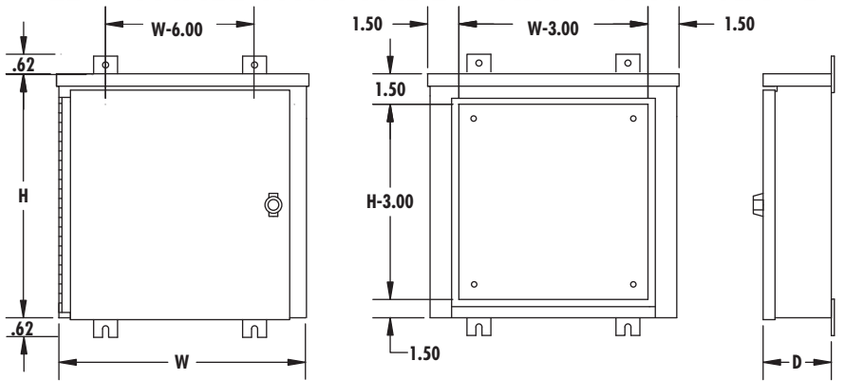

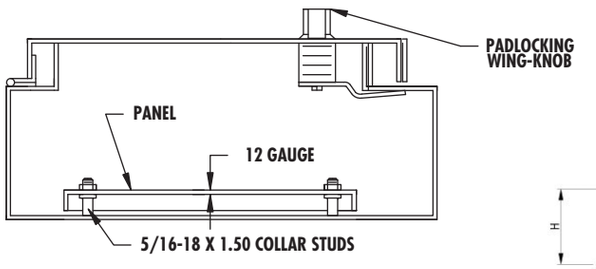

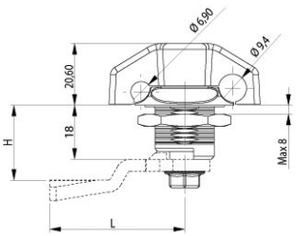

CONSTRUCTION:
- CODE GAUGE PAINT GRIP GALVANIZED STEEL
- DRIP SHIELD TOP, FRONT, BACK, AND SIDES PROTECT FROM FALLING RAIN, SNOW, OR SLEET
- CONTINUOUS HINGE
- COVER FASTENED SECURELY WITH KEY-LOCKING WING KNOB
- STUDS PROVIDED FOR MOUNTING OPTIONAL PANEL

FINISH:
- ANSI 61 GRAY POLYESTER POWDER COATING INSIDE AND OUT

NOTE: For regional specific CT cabinets call factory for more details.

TYPE 3R HINGED			3/4″ PLYWOOD PANEL		STEEL PANEL	
Enclosure Size HxWxD	Catalog Number	Weight	Catalog Number	Weight	Catalog Number	Weight
16x12x6	16126REPL	20	1612PW	1	1612P	4
16x16x6	16166REPL	23	1616PW	2	1616P	6
20x16x6	20166REPL	27	2016PW	2	2016P	9
24x18x6	24186REPL	40	2418PW	3	2418P	12
24x24x6	24246REPL	50	2424PW	4	2424P	15
36x36x6	36366REPL	105	3636PW	8	3636P	37
20x20x8	20208REPL	43	2020PW	3	2020P	10
24x20x8	24208REPL	48	2420PW	3	2420P	13
24x24x8	24248REPL	54	2424PW	4	2424P	15
30x24x8	30248REPL	64	3024PW	5	3024P	19
36x24x8	36248REPL	60	3624PW	6	3624P	24
36x30x8	36308REPL	97	3630PW	7	3630P	30
36x36x8	36368REPL	111	3636PW	8	3636P	37
48x36x8	48368REPL	125	4836PW	12	4836P	49
24x24x10	242410REPL	56	2424PW	4	2424P	15
36x24x10	362410REPL	74	3624PW	6	3624P	24
36x36x10	363610REPL	115	3636PW	8	3636P	37
24x24x12	242412REPL	61	2424PW	4	2424P	15
30x30x12	303012REPL	88	3030PW	6	3030P	19
36x24x12	362412REPL	88	3624PW	6	3624P	24
36x30x12	363012REPL	98	3630PW	7	3630P	30
36x36x12	363612REPL	113	3636PW	8	3636P	37
42x30x12	423012REPL	111	4230PW	8	4230P	35
42x36x12	423612REPL	126	4236PW	10	4236P	43
48x36x12	483612REPL	139	4836PW	12	4836P	49
60x36x12	603612REPL	165	6036PW	17	6036P	61

FOR LARGE QUANTITIES CALL FACTORY

DOUBLE DOOR-WALL MOUNT-TYPE 3R ENCLOSURES - LESS PANEL

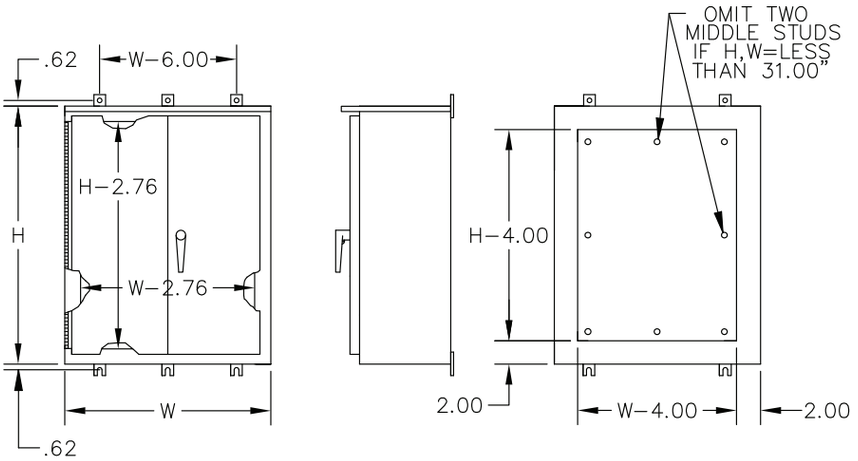

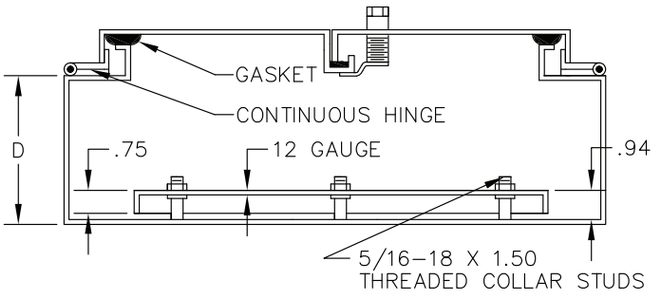

c UL us LISTED

CONSTRUCTION:
- CODE GAUGE PAINT GRIP GALVANIZED STEEL
- DRIP SHIELD TOP, FRONT, AND BACK PROTECT FROM RAIN, SNOW, OR SLEET
- CONTINUOUS HINGE
- OIL-RESISTANT GASKET
- STUDS PROVIDED FOR MOUNTING OPTIONAL PANEL
- 3 POINT LATCHING MECHANISM OPERATED BY OIL-TIGHT PADLOCKING HANDLE

FINISH:
- ANSI 61 GRAY POLYESTER POWDER COATING INSIDE AND OUT

DOUBLE DOOR-WALL MOUNT-TYPE 3R			STEEL PANEL (WHITE)	
Enclosure Size HxWxD	Catalog Number	Weight	Catalog Number	Weight
24x42x8	DW24428REPL	89	DW2442P	28
24x48x8	DW24488REPL	98	DW2448P	32
30x42x10	DW304210REPL	117	DW3042P	35
30x48x10	DW304810REPL	128	DW3048P	40
30x60x10	DW306010REPL	152	DW3060P	51
36x42x12	DW364212REPL	177	DW3642P	53
36x48x12	DW364812REPL	193	DW3648P	49
36x60x12	DW366012REPL	231	DW3660P	61
42x60x12	DW426012REPL	260	DW4260P	89
48x48x12	DW484812REPL	280	DW4848P	80

FREESTANDING-SINGLE DOOR-TYPE 3R ENCLOSURES - LESS PANEL

TYPE 3R

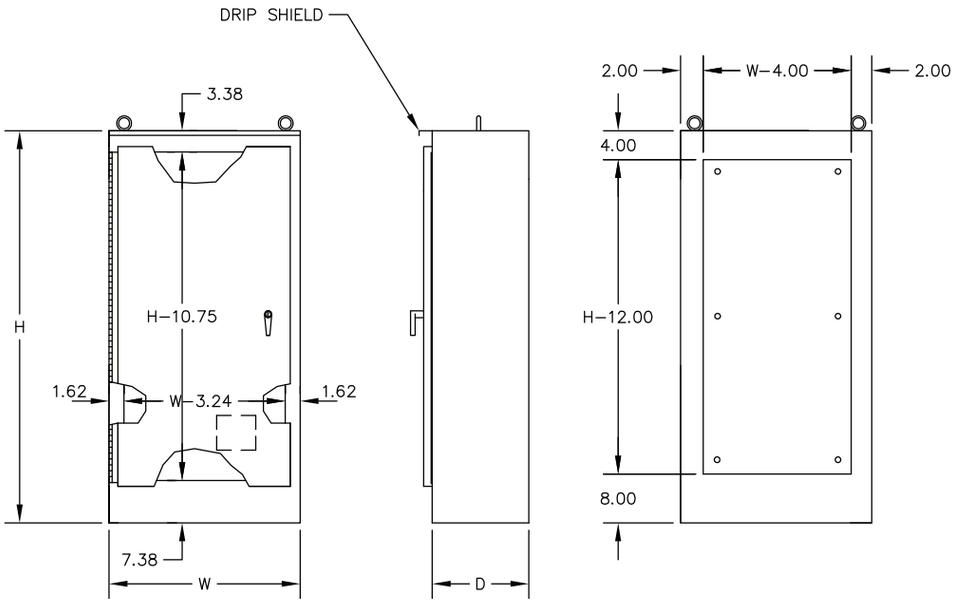

c UL us LISTED

CONSTRUCTION:
- 12 GAUGE STEEL
- SEAMS CONTINUOUSLY WELDED AND GROUND SMOOTH
- 3-POINT LATCHING OPERATED BY OIL-TIGHT PADLOCKING L-HANDLE
- LATCH RODS HAVE ROLLERS FOR EASIER DOOR CLOSING
- HEAVY GAUGE CONTINUOUS HINGE
- LIFTING EYES FOR EASY HANDLING
- REMOVABLE PRINT POCKET
- OIL RESISTANT DOOR GASKET
- UNI-STRUT PROVIDED FOR MOUNTING OPTIONAL PANEL

FINISH:
- ANSI 61 GRAY POLYESTER POWDER COATING INSIDE AND OUT

FREESTANDING-SINGLE DOOR-TYPE RE			STEEL PANEL (WHITE)	
Enclosure Size HxWxD	Catalog Number	Weight	Catalog Number	Weight
72x24x18	F722418REPL	246	F7224P	65
72x30x18	F723018REPL	285	F7230P	74
72x36x18	F723618REPL	325	F7236P	98
90x36x20	F903620REPL	406	F9036P	108
72x24x24	F722424REPL	300	F7224P	65
72x30x24	F723024REPL	335	F7230P	74
72x36x24	F723624REPL	370	F7236P	98
90x36x24	F903624REPL	440	F9036P	108
72x24x30	F722430REPL	355	F7224P	65
72x36x30	F723630REPL	420	F7236P	98
72x24x36	F722436REPL	400	F7224P	65
72x36x36	F723636REPL	465	F7236P	98
90x36x36	F903636REPL	525	F9036P	108

FOR LARGE QUANTITIES CALL FACTORY

FREESTANDING DOUBLE DOOR TYPE 3R ENCLOSURES - LESS PANEL

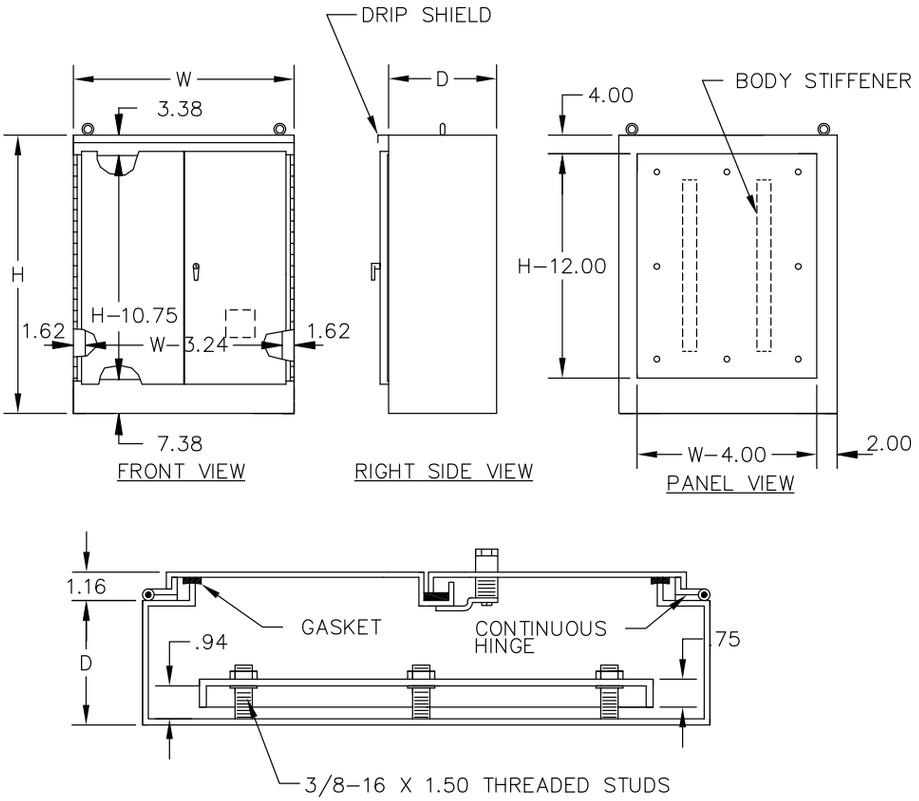

TYPE 3R

CONSTRUCTION:
- 12 GAUGE STEEL
- SEAMS CONTINUOUSLY WELDED AND GROUND SMOOTH
- DRIP SHIELD
- GASKETED OVERLAPPING DOORS ELIMINATE NEED FOR CENTER POST
- 3-POINT LATCHING MECHANISM OPERATED BY OIL-TIGHT PADLOCKING L-HANDLE
- LATCH RODS HAVE ROLLERS FOR EASIER DOOR CLOSING
- HEAVY GAUGE CONTINUOUS HINGE
- HEAVY-DUTY LIFTING EYES
- REMOVABLE PRINT POCKET
- OIL RESISTANT GASKET
- UNI-STRUT PROVIDED FOR MOUNTING OPTIONAL PANEL

FINISH:
- ANSI 61 GRAY POLYESTER POWDER COATING INSIDE AND OUT

FREESTANDING DOUBLE DOOR-TYPE RF			STEEL PANEL (WHITE)	
Enclosure Size HxWxD	Catalog Number	Weight	Catalog Number	Weight
72x48x18	DF724818REPL	500	DF7248P	131
72x60x18	DF726018REPL	568	DF7260P	158
72x72x18	DF727218REPL	645	DF7272P	187
90x72x20	DF907220REPL	781	DF9072P	238
72x48x24	DF724824REPL	530	DF7248P	131
72x60x24	DF726024REPL	645	DF7260P	158
72x72x24	DF727224REPL	695	DF7272P	187
90x72x24	DF907224REPL	825	DF9072P	238
72x60x36	DF726036REPL	750	DF7260P	158
90x72x36	DF907236REPL	1000	DF9072P	238

FOR LARGE QUANTITIES CALL FACTORY

DOUBLE DOOR FLOOR MOUNT TYPE 3R ENCLOSURES - LESS PANEL

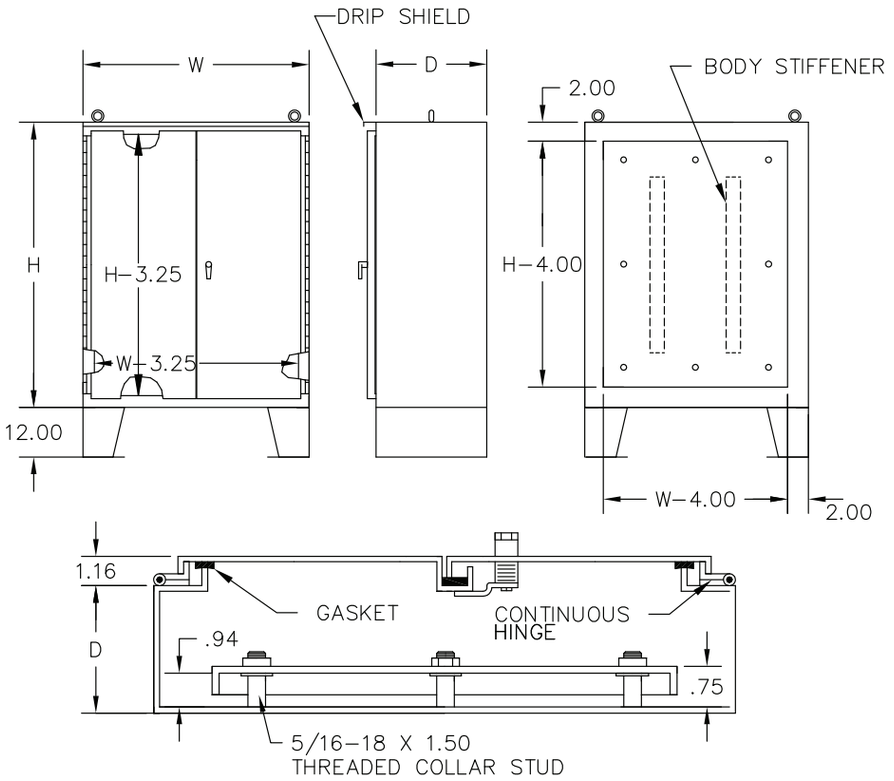

c UL us LISTED

CONSTRUCTION:
- 12 GAUGE PAINT GRIP GALVANIZED STEEL
- SEAMS CONTINUOUSLY WELDED AND GROUND SMOOTH
- GASKETED OVERLAPPING DOORS ELIMINATE NEED FOR CENTERPOST
- 3-POINT LATCHING MECHANISM OPERATED BY OIL-TIGHT PADLOCKING L-HANDLE
- LATCH RODS HAVE ROLLERS FOR EASIER DOOR CLOSING
- HEAVY GAUGE CONTINUOUS HINGE
- PRINT POCKET PROVIDED ON DOOR WITH 3-POINT LATCH
- 12 INCH FLOOR STANDS ARE WELDED TO ENCLOSURE
- HEAVY-DUTY LIFTING EYES
- OIL-RESISTANT GASKET
- STUDS PROVIDED FOR MOUNTING OPTIONAL PANEL

FINISH:
- ANSI 61 GRAY POLYESTER POWDER COATING INSIDE AND OUT

DOUBLE DOOR FLOOR MOUNT TYPE 3R			STEEL PANEL (WHITE)	
Enclosure Size HxWxD	Catalog Number	Weight	Catalog Number	Weight
54x42x8	D54428REPL	210	D5442P	62
60x48x8	D60488REPL	319	D6048P	103
60x48x10	D604810REPL	330	D6048P	103
60x60x10	D606010REPL	390	D6060P	130
72x60x10	D726010REPL	450	D7260P	158
72x72x10	D727210REPL	525	D7272P	191
60x48x12	D604812REPL	360	D6048P	103
60x60x12	D606012REPL	400	D6060P	130
72x60x12	D726012REPL	475	D7260P	158
72x72x12	D727212REPL	560	D7272P	191
60x48x16	D604816REPL	420	D6048P	103
60x60x16	D606016REPL	520	D6060P	130
72x60x16	D726016REPL	582	D7260P	158
72x72x16	D727216REPL	630	D7272P	191
60x48x20	D604820REPL	486	D6048P	103
72x60x20	D726020REPL	577	D7260P	158
72x72x20	D727220REPL	650	D7272P	191
60x48x24	D604824REPL	500	D6048P	103
60x60x24	D606024REPL	566	D6060P	130
72x60x24	D726024REPL	614	D7260P	158
72x72x24	D727224REPL	690	D7272P	191

FOR LARGE QUANTITIES CALL FACTORY

NON UL LISTED TRANSFORMER HOUSING CABINETS

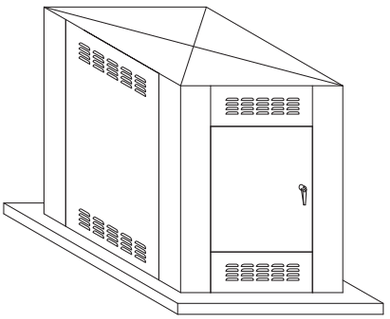

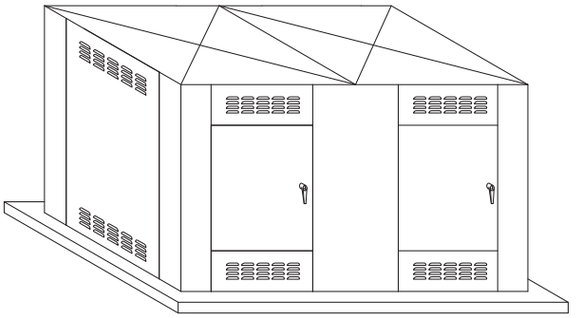

FINISH:
- UTILITY GREEN POLYESTER POWDER COATING INSIDE AND OUT

TYPE 3R

42 INCH X 42 INCH WIDE SQUARE HOUSING

Catalog Number	Weight	Catalog Number	Weight
45-42-1 THC	444	51-42-1 THC	476
45-42-2 THC	758	51-42-2 THC	808
45-42-3 THC	1072	51-42-3 THC	1140
45-42-4 THC	1386	51-42-4 THC	1472
61-42-1 THC	514	71-42-1 THC	571
61-42-2 THC	854	71-42-2 THC	938
61-42-3 THC	1194	71-42-3 THC	1305
61-42-4 THC	1534	71-42-4 THC	1627

54 INCH X 54 INCH WIDE SQUARE HOUSING

Catalog Number	Weight	Catalog Number	Weight
61-54-1 THC	716	71-54-1 THC	771
61-54-2 THC	1886	71-54-2 THC	1282
61-54-3 THC	1690	71-54-3 THC	1792
61-54-4 THC	2192	71-54-4 THC	2304
81-54-1 THC	800	91-54-1 THC	885
81-54-2 THC	1348	91-54-2 THC	1436
81-54-3 THC	1697	91-54-3 THC	1987
81-54-4 THC	2412	91-54-4 THC	2538

66 INCH X 66 INCH WIDE SQUARE HOUSING

Catalog Number	Weight	Catalog Number	Weight
61-66-1 THC	889	71-66-1 THC	942
61-66-2 THC	998	71-66-2 THC	1588
61-66-3 THC	2105	71-66-3 THC	2234
61-66-4 THC	2740	71-66-4 THC	2880
81-66-1 THC	1011	91-66-1 THC	1112
81-66-2 THC	1751	91-66-2 THC	1846
81-66-3 THC	2480	91-66-3 THC	2580
81-66-4 THC	3187	91-66-4 THC	3310

Note: Non-stocking items made per order: Once order is placed in production it **cannot** be cancelled.

JIC TYPE 4 PAINTED HINGED TROUGH

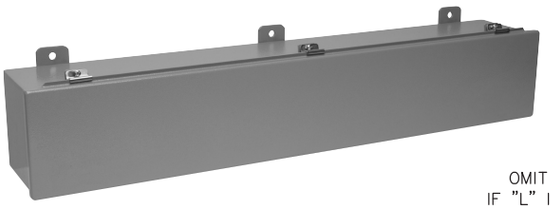

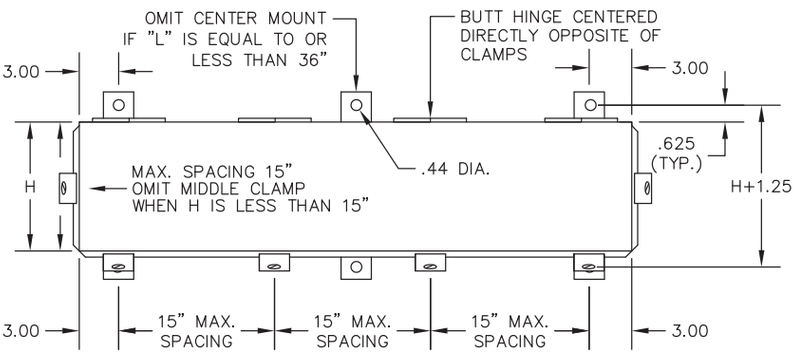

c UL us LISTED

CONSTRUCTION:
- CODE GAUGE GALVANNEAL
- SEAMS CONTINUOUSLY WELDED AND GROUND SMOOTH
- BUTT HINGES
- SCREW CLAMPS ARE QUICK AND EASY TO OPERATE
- OIL-RESISTANT GASKET

FINISH:
- ANSI 61 GRAY POLYESTER POWDER COATING INSIDE AND OUT

TYPE 4

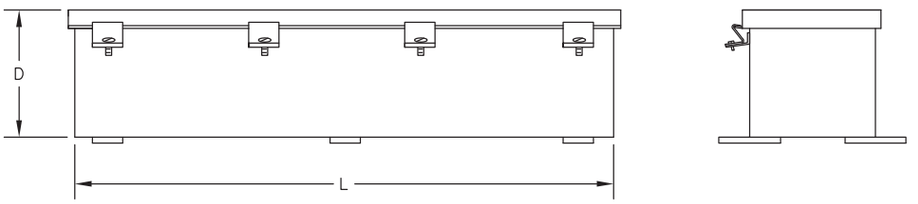

Trough Size HxDxL	Catalog Number	Weight
4x4x12	1-44JON4	7
4x4x24	2-44JON4	11
4x4x36	3-44JON4	17
4x4x48	4-44JON4	21
4x4x60	5-44JON4	26
4x4x72	6-44JON4	31
6x6x12	1-66JON4	10
6x6x24	2-66JON4	17
6x6x36	3-66JON4	24
6x6x48	4-66JON4	30
6x6x60	5-66JON4	33
6x6x72	6-66JON4	43
8x8x12	1-88JON4	14
8x8x24	2-88JON4	24
8x8x36	3-88JON4	33
8x8x48	4-88JON4	41
8x8x60	5-88JON4	50
8x8x72	6-88JON4	61
12x12x24	2-1212JON4	35
12x12x36	3-1212JON4	50
12x12x48	4-1212JON4	61
12x12x60	5-1212JON4	74
12x12x72	6-1212JON4	88

FOR LARGE QUANTITIES CALL FACTORY

JIC BOXES TYPE 4 & 12 – CONTINUOUS HINGE - LESS PANEL

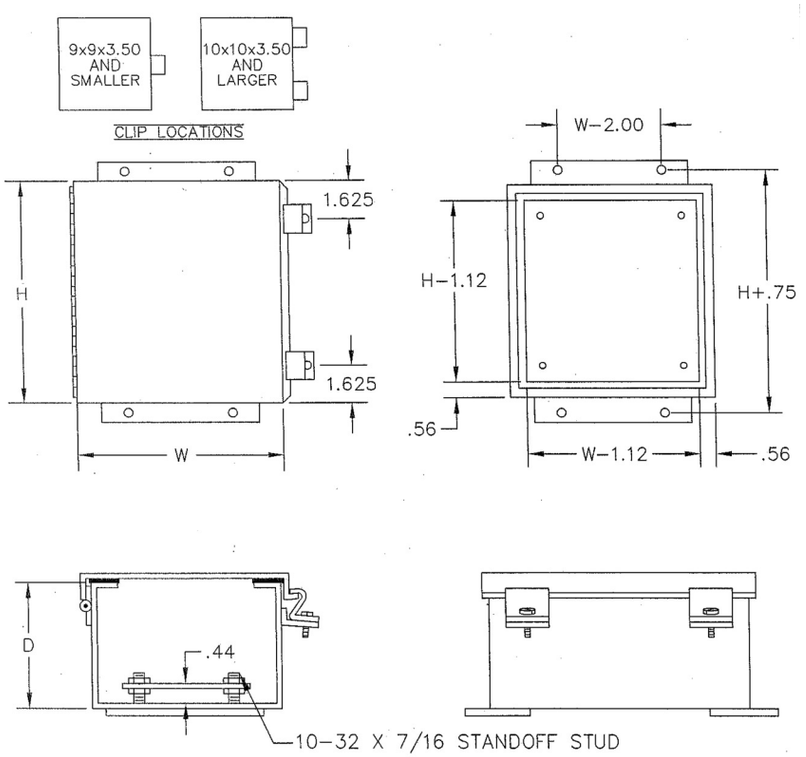

CONSTRUCTION:
- CODE GAUGE GALVANNEAL
- SEAMS CONTINUOUSLY WELDED AND GROUND SMOOTH
- SCREW CLAMPS ARE QUICK AND EASY TO OPERATE
- CONTINUOUS HINGE
- OIL-RESISTANT GASKET
- OPTIONAL PANEL

FINISH:
- ANSI 61 GRAY POLYESTER POWDER COATING INSIDE AND OUT

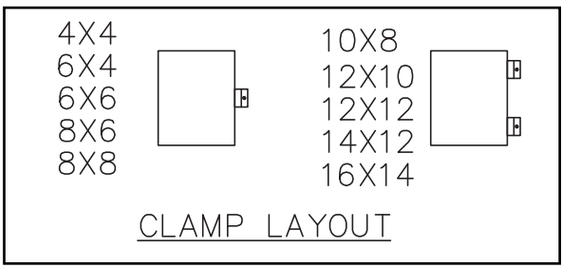

JIC BOXES TYPE 4			STEEL PANEL (WHITE)	
Enclosure Size HxWxD	Catalog Number	Weight	Catalog Number	Weight
4x4x3	JH443N412	2	N/A	N/A
6x4x3	JH643N412	3	64PJ	1
6x6x4	JH664N412	4	66PJ	1
8x6x4	JH864N412	6	86PJ	1
10x8x4	JH1084N412	9	108PJ	1
12x10x5	JH12105N412	13	1210PJ	2
10x8x6	JH1086N412	8	108PJ	1
10x10x6	JH10106N412	11	1010PJ	2
12x12x6	JH12126N412	15	1212PJ	3
14x12x6	JH14126N412	17	1412PJ	3
16x14x6	JH16146N412	20	1614PJ	5

NOTE: FOR QUICK RELEASE LATCH SEE ACCESSORIES PAGE

FOR LARGE QUANTITIES CALL FACTORY

SINGLE DOOR TYPE 4 - PAINTED ENCLOSURE - LESS PANEL WITH 3-POINT LATCH

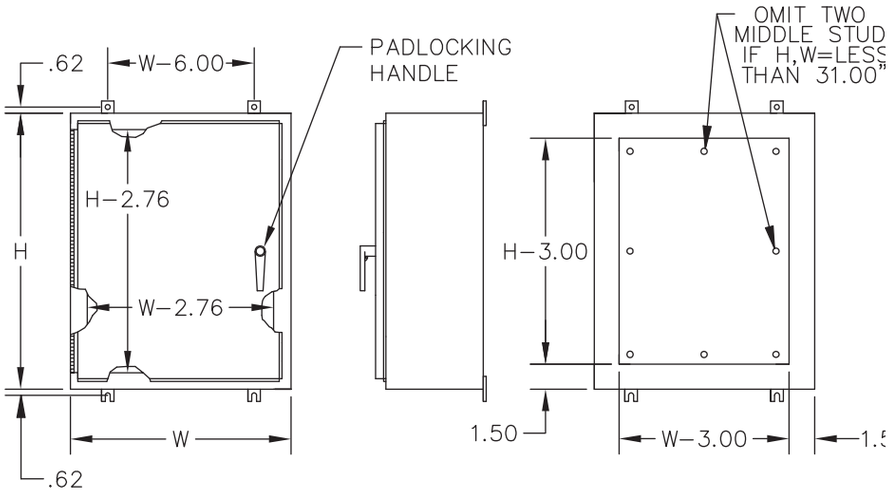

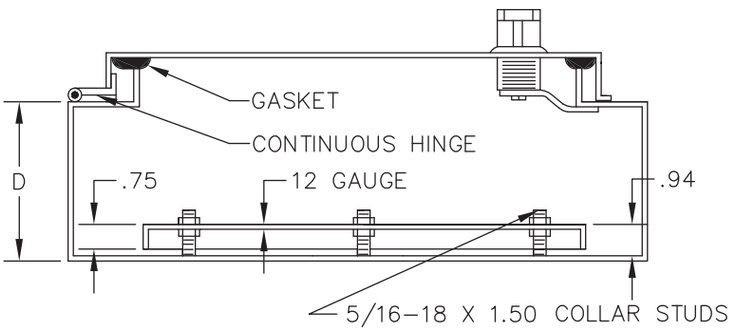

CONSTRUCTION:
- 14-GAUGE GALVANNEAL
- SEAMS CONTINUOUSLY WELDED AND GROUND SMOOTH
- 3-POINT LATCHING MECHANISM OPERATED BY PADLOCKING L-HANDLE
- HEAVY GAUGE CONTINUOUS HINGE
- OIL-RESISTANT GASKET
- STUDS PROVIDED FOR MOUNTING OPTIONAL PANEL

FINISH:
- ANSI 61 GRAY POLYESTER POWDER COATING INSIDE AND OUT

TYPE 4

SINGLE DOOR TYPE 4 WITH 3-POINT LATCH			STEEL PANEL (WHITE)	
Enclosure Size HxWxD	Catalog Number	Weight	Catalog Number	Weight
24x20x6	24206N43PT	48	2420P	13
24x20x8	24208N43PT	52	2420P	13
24x24x8	24248N43PT	59	2424P	15
30x24x8	30248N43PT	70	3024P	19
30x30x8	30308N43PT	83	3030P	24
36x24x8	36248N43PT	79	3624P	24
36x30x8	36308N43PT	97	3630P	30
48x36x8	48368N43PT	144	4836P	49
24x20x10	242010N43PT	57	2420P	13
36x30x10	363010N43PT	103	3630P	30
48x36x10	483610N43PT	152	4836P	49
24x24x12	242412N43PT	68	2424P	15
30x24x12	302412N43PT	80	3024P	19
36x30x12	363012N43PT	109	3630P	30
36x36x12	363612N43PT	124	3636P	37
42x36x12	423612N43PT	139	4236P	43
48x36x12	483612N43PT	159	4836P	49
60x36x12	603612N43PT	185	6036P	61
48x36x16	483616N43PT	171	4836P	49
60x36x16	603616N43PT	203	6036P	61

SINGLE DOOR TYPE 4-PAINTED-ENCLOSURE - LESS PANEL

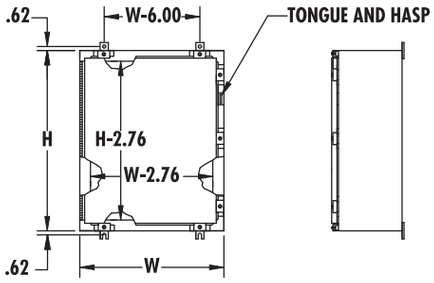

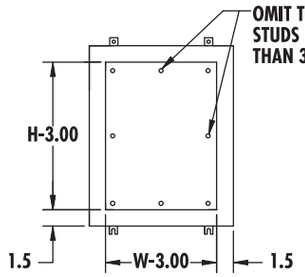

NOTE: MAXIMUM SPACING BETWEEN DOOR CLAMPS IS 15.00 INCHES

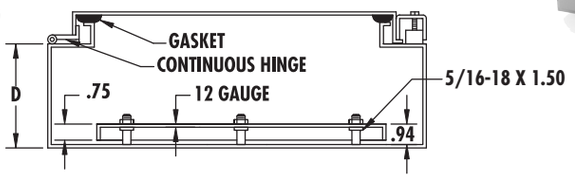

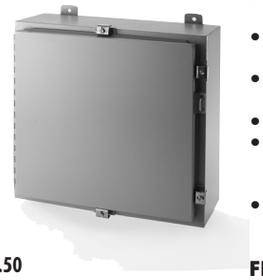

c UL us LISTED

CONSTRUCTION:
- CODE GAUGE PAINT GRIP GALVANIZED STEEL
- SEAMS CONTINUOUSLY WELDED AND GROUND SMOOTH
- STAINLESS DOOR CLAMPS ON THREE SIDES OF DOOR
- HEAVY GUAGE CONTINUOUS HINGE
- TONGUE AND HASP FOR PADLOCKING
- OIL RESISTANT GASKET
- STUDS PROVIDED FOR MOUNTING OPTIONAL PANEL
- ALSO MEETS INDUSTRY STANDARDS FOR TYPE 12 USE

FINISH:
- ANSI 61 GRAY POLYESTER POWDER COATING INSIDE AND OUT

SINGLE DOOR TYPE 4				STEEL PANEL (WHITE)	
Enclosure Size HxWxD	Catalog Number	Weight	Number of Clamps	Catalog Number	Weight
16x12x6	16126N4	23	4	1612P	4
16x16x6	16166N4	28	4	1616P	6
20x16x6	20166N4	32	4	2016P	9
16x20x6	16206N4	32	4	1620P	9
20x20x6	20206N4	38	4	2020P	10
24x12x6	24126N4	31	5	2412P	7
24x16x6	24166N4	37	5	2416P	9
24x20x6	24206N4	43	5	2420P	13
24x24x6	24246N4	49	5	2424P	15
30x24x6	30246N4	60	5	3024P	19
30x20x6	30206N4	53	5	3020P	16
36x24x6	36246N4	69	5	3624P	24
16x12x8	16128N4	25	4	1612P	4
20x16x8	20168N4	35	4	2016P	9
20x20x8	20208N4	42	4	2020P	10
24x20x8	24208N4	47	5	2420P	13
24x24x8	24248N4	54	5	2424P	15
30x20x8	30208N4	57	5	3020P	16
30x24x8	30248N4	65	5	3024P	19
30x30x8	30308N4	78	7	3030P	24
36x24x8	36248N4	74	5	3624P	24
36x30x8	36308N4	92	7	3630P	30
42x30x8	42308N4	106	8	4230P	35
42x36x8	42368N4	125	8	4236P	43
48x36x8	48368N4	139	8	4836P	49
60x36x8	60368N4	167	9	6036P	61
20x16x10	201610N4	39	4	2016P	9
24x20x10	242010N4	52	5	2420P	13
30x24x10	302410N4	70	5	3024P	19
36x30x10	363010N4	98	7	3630P	30
48x30x10	483010N4	125	8	4830P	40
48x36x10	483610N4	147	8	4836P	49
60x36x10	603610N4	176	9	6036P	61
36x36x12	363612N4	119	7	3636P	37
30x24x12	302412N4	75	5	3024P	19
36x30x12	363012N4	104	7	3630P	30
48x36x12	483612N4	154	8	4836P	49

NOTE: FOR QUICK RELEASE LATCHES SEE ACCESSORIES PAGE

FOR LARGE QUANTITIES CALL FACTORY

FREE STANDING SINGLE DOOR TYPE 4 - PAINTED ENCLOSURE LESS PANEL WITH 3-POINT LATCH

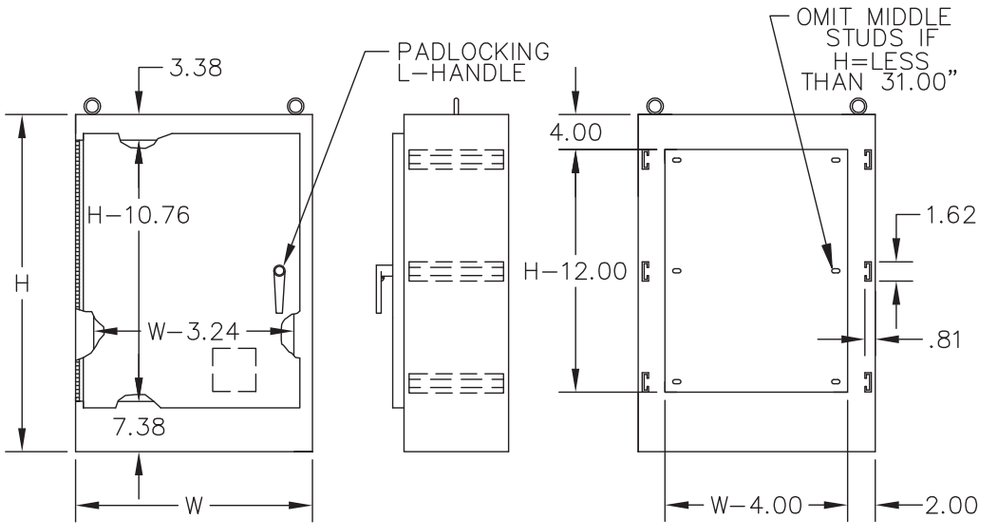

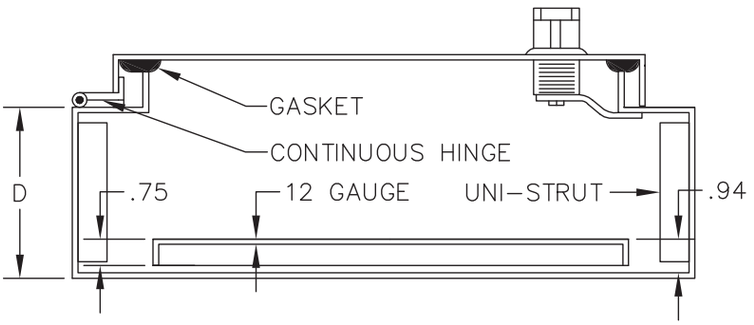

c UL us LISTED

CONSTRUCTION:
- 12 GAUGE GALVANNEAL
- SEAMS CONTINUOUSLY WELDED AND GROUND SMOOTH
- 3-POINT LATCHING MECHANISM OPERATED BY PADLOCKING L-HANDLE
- HEAVY GAUGE CONTINUOUS HINGE.
- LIFTING EYES FOR EASY HANDLING
- REMOVABLE PRINT POCKET
- OIL-RESISTANT GASKET
- UNI-STRUT PROVIDED FOR MOUNTING OPTIONAL PANEL

FINISH:
- ANSI 61 GRAY POLYESTER POWDER COATING INSIDE AND OUT

FREE STANDING SINGLE DOOR TYPE 4 WITH 3-POINT LATCH			STEEL PANEL (WHITE)	
Enclosure Size HxWxD	Catalog Number	Weight	Catalog Number	Weight
60x24x18	F602418N43PT	214	F6024P	58
72x24x18	F722418N43PT	246	F7224P	65
72x30x18	F723018N43PT	285	F7230P	74
72x36x18	F723618N43PT	325	F7236P	98
90x24x20	F902420N43PT	324	F9024P	74
90x36x20	F903620N43PT	406	F9036P	108
60x36x20	F603620N43PT	302	F6036P	87
72x24x24	F722424N43PT	300	F7224P	65
72x30x24	F723024N43PT	335	F7230P	74
72x36x24	F723624N43PT	370	F7236P	98
90x36x24	F903624N43PT	440	F9036P	108
72x36x30	F723620N43PT	420	F7236P	98
72x36x36	F723636N43PT	465	F7236P	98
90x36x36	F903636N43PT	525	F9036P	108

FREE STANDING TYPE 4 ENCLOSURE LESS PANEL

CONSTRUCTION:
- 12 GAUGE STEEL.
- SEAMS CONTINUOUSLY WELDED AND GROUND SMOOTH
- DOOR CLAMPS ON THREE SIDES OF DOOR ASSURE WATERTIGHT SEAL
- HEAVY GAUGE CONTINUOUS HINGE
- TONGUE AND HASP PROVIDED FOR PAD LOCKING
- LIFTING EYES FOR EASY HANDLING
- OIL-RESISTANT DOOR GASKET
- REMOVABLE PRINT POCKET
- OPTIONAL UNI-STRUT OR STUDS PROVIDED FOR MOUNTING OPTIONAL PANEL
- ALSO MEETS INDUSTRY STANDARDS FOR TYPE 12 USE

FINISH:
- ANSI 61 GRAY POLYESTER POWDER COATING INSIDE AND OUT

TYPE 4

NOTE: MAXIMUM SPACING BETWEEN DOOR CLAMPS IS 15.00 INCHES.

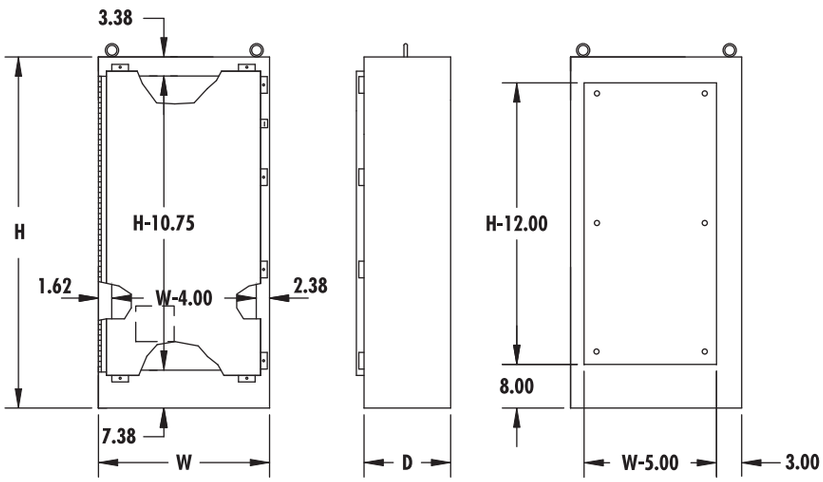

FREE STANDING TYPE 4 ENCLOSURES				STEEL PANEL (WHITE)	
Enclosure Size HxWxD	Catalog Number	Weight	Number of Clamps	Catalog Number	Weight
72.06x25.06x18.00	F722518N4	258	11	F7225PN4	65
72.06x31.06x24.00	F723124N4	347	11	F7231PN4	74
72.06x37.06x24.00	F723724N4	383	11	F7237PN4	98

FREE STANDING DOUBLE DOOR TYPE 4 - PAINTED ENCLOSURE
LESS PANEL WITH 3-POINT LATCH

TYPE 4

c UL us LISTED

CONSTRUCTION:
- 12 GAUGE GALVANNEAL
- SEAMS CONTINUOUSLY WELDED AND GROUND SMOOTH
- REMOVABLE CENTERPOST FOR EASY PANEL INSTALLATION
- HEAVY-DUTY LIFTING EYES
- 3-POINT LATCHING MECHANISM OPERATED BY PADLOCKING L-HANDLE
- HEAVY GAUGE CONTINUOUS HINGE
- REMOVABLE PRINT POCKET
- OIL-RESISTANT GASKET
- UNI-STRUT PROVIDED FOR MOUNTING OPTIONAL PANEL

FINISH:
- ANSI 61 POLYESTER POWDER COATING INSIDE AND OUT

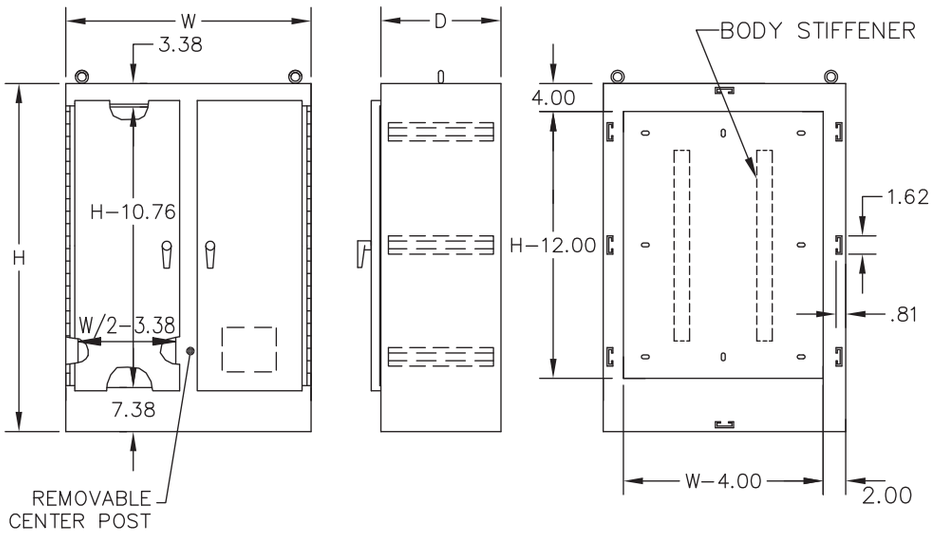

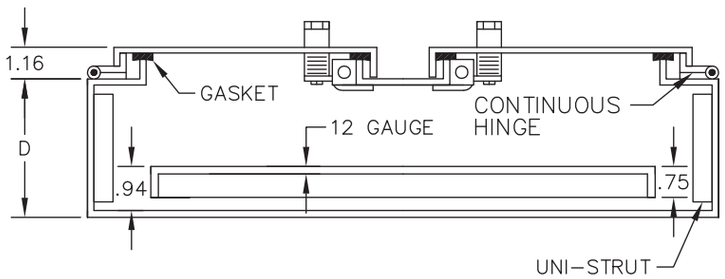

FREE STANDING DOUBLE DOOR TYPE 4 WITH 3-POINT LATCH			STEEL PANEL (WHITE)	
Enclosure Size HxWxD	Catalog Number	Weight	Catalog Number	Weight
60x48x18	DF604818N43PT		DF6048P	
72x48x18	DF724818N43PT		DF7248P	131
72x60x18	DF726018N43PT		DF7260P	158
72x72x18	DF727218N43PT		DF7272P	187
90x48x20	DF904820N43PT		DF9048P	184
90x72x20	DF907220N43PT		DF9072P	238
72x48x24	DF724824N43PT		DF7248P	131
72x60x24	DF726024N43PT		DF7260P	158
72x72x24	DF727224N43PT		DF7272P	187
90x72x24	DF907224N43PT		DF9072P	238
72x60x36	DF726036N43PT		DF7260P	158
90x72x36	DF907236N43PT		DF9072P	238

FOR LARGE QUANTITIES CALL FACTORY

DOUBLE DOOR WALL MOUNT TYPE 4 - PAINTED ENCLOSURE
LESS PANEL WITH 3-POINT LATCH

c UL us LISTED

CONSTRUCTION:
- CODE GAUGE GALVANNEAL
- SEAMS CONTINUOUSLY WELDED AND GROUND SMOOTH
- REMOVABLE CENTERPOST FOR EASY PANEL INSTALLATION
- HEAVY-DUTY LIFTING EYES
- 3-POINT LATCHING MECHANISM OPERATED BY PADLOCKING L-HANDLE
- HEAVY GAUGE CONTINUOUS HINGE.
- MOUNTING FEET
- REMOVABLE PRINT POCKET
- OIL-RESISTANT GASKET
- STUDS PROVIDED FOR MOUNTING OPTIONAL PANEL

FINISH:
- ANSI 61 GRAY POLYESTER POWDER COATING INSIDE AND OUT

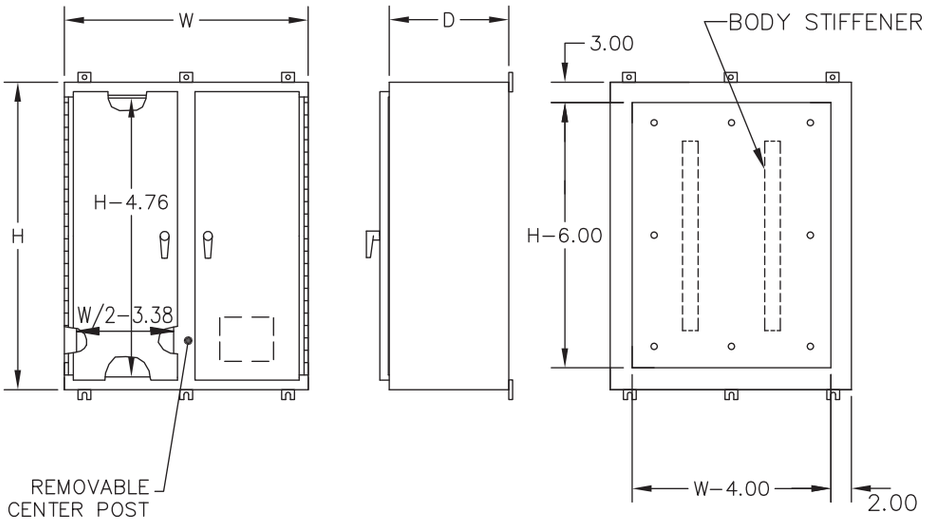

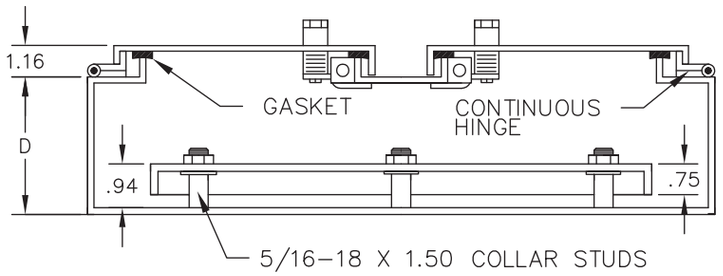

TYPE 4

DOUBLE DOOR WALL MOUNT TYPE 4 WITH 3-POINT LATCH			STEEL PANEL (WHITE)	
Enclosure Size HxWxD	Catalog Number	Weight	Catalog Number	Weight
24x42x8	DW24428N43PT		DW2442P	25
24x48x8	DW24488N43PT		DW2448P	31
30x42x10	DW304210N43PT		DW3042P	35
30x48x10	DW304810N43PT		DW3048P	40
30x60x10	DW306010N43PT		DW3060P	50
36x42x12	DW364212N43PT		DW3642P	43
36x48x12	DW364812N43PT		DW3648P	49
36x60x12	DW366012N43PT		DW3660P	61
42x42x12	DW424212N43PT		DW4242P	50
42x48x12	DW424812N43PT		DW4248P	58
42x60x12	DW426012N43PT		DW4260P	89
42x48x12	DW484812N43PT		DW4848PN4	80

DOUBLE DOOR FLOOR MOUNT TYPE 4 - PAINTED ENCLOSURE LESS PANEL WITH 3-POINT LATCH

TYPE 4

c UL us LISTED

CONSTRUCTION:
- 12 GAUGE GALVANNEAL
- SEAMS CONTINUOUSLY WELDED AND GROUND SMOOTH
- REMOVABLE CENTERPOST FOR EASY PANEL INSTALLATION
- HEAVY-DUTY LIFTING EYES
- 3-POINT LATCHING MECHANISM OPERATED BY PADLOCKING L-HANDLE
- HEAVY GAUGE CONTINUOUS HINGE
- 12 INCH FLOOR STANDS ARE WELDED TO ENCLOSURE
- REMOVABLE PRINT POCKET
- OIL-RESISTANT GASKET
- STUDS PROVIDED FOR MOUNTING OPTIONAL PANEL

FINISH:
- ANSI 61 POLYESTER POWDER COATING INSIDE AND OUT

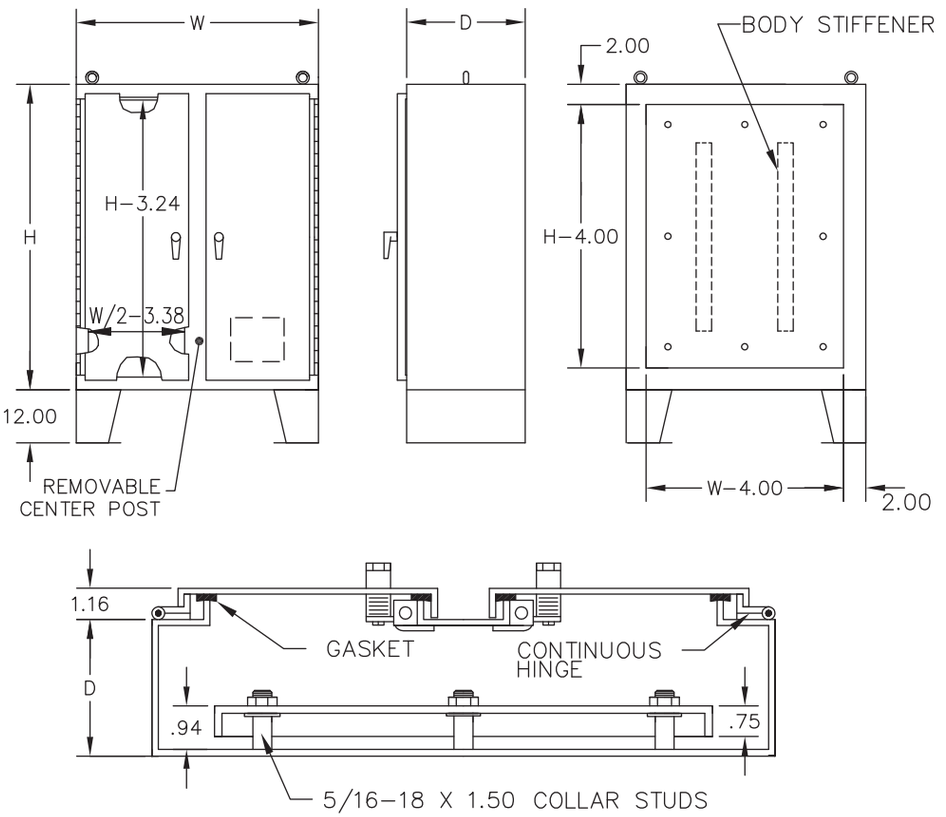

DOUBLE DOOR FLOOR MOUNT TYPE 4 WITH 3-POINT LATCH			STEEL PANEL (WHITE)	
Enclosure Size HxWxD	Catalog Number	Weight	Catalog Number	Weight
62x48x12	D624812N43PT	371	D6248PN4	103
62x60x12	D626012N43PT	507	D6260PN4	130
74x60x12	D746012N43PT	626	D7460PN4	158
74x72x12	D747212N43PT	626	D7472PN4	191
62x48x18	D624818N43PT	412	D6248PN4	103
74x72x24	D747224N43PT	736	D7472PN4	191

DOUBLE DOOR FLOOR MOUNTED TYPE 4 PAINTED ENCLOSURES - LESS PANEL

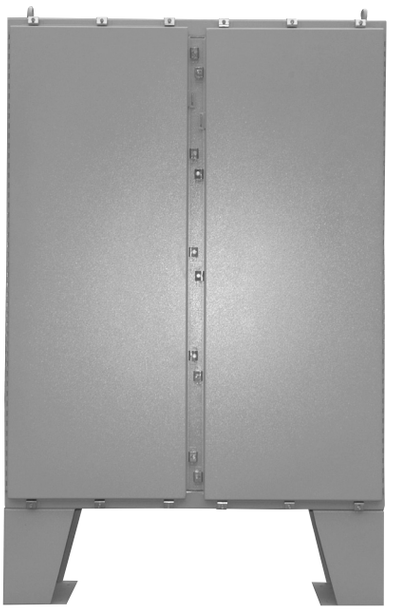

CONSTRUCTION:
- 12 GAUGE STEEL. GALVANIZED STEEL
- SEAMS CONTINUOUSLY WELDED AND GROUND SMOOTH
- REMOVABLE CENTER POST FOR EASY PANEL INSTALLATION
- HEAVY DUTY LIFTING EYES
- STAINLESS SCREWS AND CLAMPS ON THREE SIDES OF EACH DOOR ASSURE WATERTIGHT SEAL
- HEAVY GUAGE CONTINUOUS HINGE
- 12 INCH FLOOR STANDS ARE WELDED TO ENCLOSURE
- TONGUE AND HASP FOR PADLOCKING
- REMOVABLE PRINT POCKET
- OIL RESISTANT GASKET
- STUDS PROVIDED FOR MOUNTING OPTIONAL PANEL
- ALSO MEETS INDUSTRY STANDARDS FOR TYPE 12 USE

FINISH:
- ANSI 61 GRAY POLYESTER POWDER COATING INSIDE AND OUT

TYPE 4

NOTE: MAXIMUM SPACING BETWEEN DOOR CLAMPS IS 15.00 INCHES.

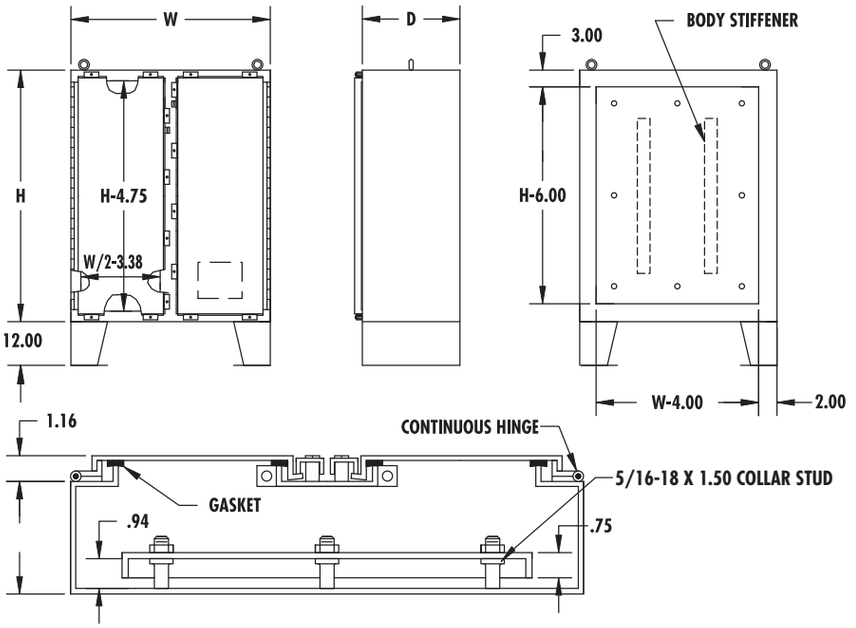

DOUBLE DOOR FLOOR MOUNTED TYPE 4				STEEL PANEL (WHITE)	
Enclosure Size HxWxD	Catalog Number	Weight	Number of Clamps	Catalog Number	Weight
62x48x10	D624810N4	357	22	D6248PN4	103
62x60x12	D626012N4	507	22	D6260PN4	130
74x60x12	D746012N4	626	24	D7460PN4	158
74x72x12	D747212N4	626	24	D7472PN4	191

FOR LARGE QUANTITIES CALL FACTORY

(ENCLOSURES 24H X 20W AND SMALLER)

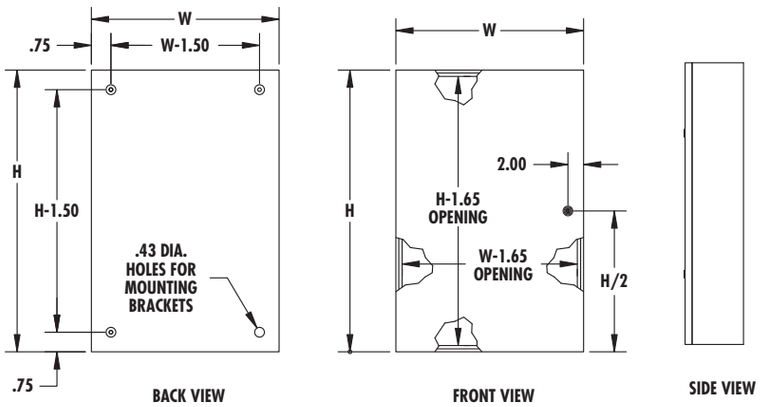

c UL us LISTED

CONSTRUCTION:
- CODE GAUGE PAINT GRIP GALVANIZED STEEL
- REMOVABLE DOOR
- OFFSET BODY ALLOWS COVER TO BE FLUSH WITH BOX
- NEARLY FLUSH QUARTER TURN LATCH, HOLDS DOOR SECURELY CLOSED
- STUDS PROVIDED FOR MOUNTING OPTIONAL PANEL

FINISH:
- ANSI 61 GRAY POLYESTER POWDER COATING INSIDE AND OUT OVER PAINT GRIP GALVANIZED STEEL

TYPE 4

TYPE 4 & 12 HINGED ENCLOSURE				STEEL PANEL (WHITE)	
Enclosure Size HxWxD	Qturn. Latches	Catalog Number	Weight	Catalog Number	Weight
12x12x6	1	12126N412	15	1212P	3
16x12x6	1	16126N412	22	1612P	4
16x16x6	1	16166N412	27	1616P	6
16x20x6	1	16206N412	31	1620P	9
20x16x6	1	20166N412	31	2016P	9
20x20x6	1	20206N412	36	2020P	10
24x12x6	1	24126N412	30	2412P	7
24x16x6	1	24166N412	37	2416P	9
24x20x6	1	24206N412	42	2420P	13
12x12x8	1	12128N412	16	1212P	3
16x12x8	1	16128N412	24	1612P	4
16x16x8	1	16168N412	31	1616P	6
16x20x8	1	16208N412	36	1620P	9
20x16x8	1	20168N412	34	2016P	9
20x20x8	1	20208N412	40	2020P	10
20x24x8	1	20248N412	53	2024P	13
24x16x8	1	24168N412	40	2416P	9
24x20x8	1	24208N412	46	2420P	13
16x12x10	1	161210N412	25	1612P	4
16x16x10	1	161610N412	37	1616P	6
16x20x10	1	162010N412	41	1620P	9
20x16x10	1	201610N412	38	2016P	9
20x20x10	1	202010N412	44	2020P	10
20x24x10	1	202410N412	58	2024P	13
24x16x10	1	241610N412	45	2416P	9
24x20x10	1	242010N412	50	2420P	13
20x20x12	1	202012N412	49	2020P	10
24x20x12	1	242012N412	54	2420P	13

Optional External Mounting Feet Part# MFKIT

TYPE 4 & 12 HINGED ENCLOSURE

(ENCLOSURES LARGER THAN 24H X 20W)

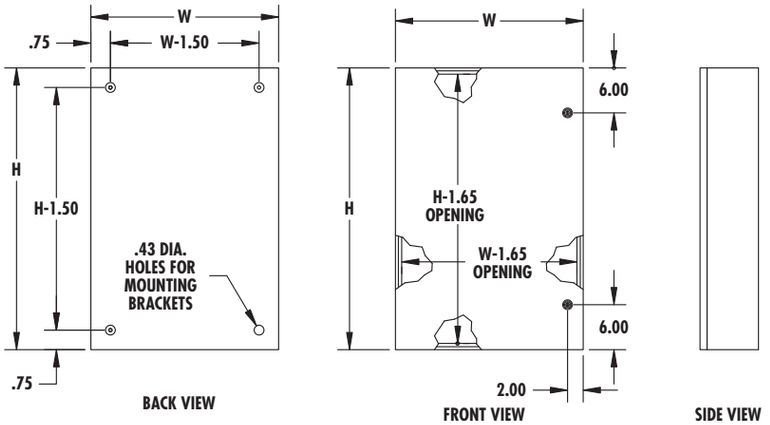

c UL us LISTED

CONSTRUCTION:
- CODE GAUGE PAINT GRIP GALVANIZED STEEL
- REMOVABLE DOOR
- OFFSET BODY ALLOWS COVER TO BE FLUSH WITH BOX
- NEARLY FLUSH QUARTER TURN LATCH, HOLDS DOOR SECURELY CLOSED
- STUDS PROVIDED FOR MOUNTING OPTIONAL PANEL

FINISH:
- ANSI 61 GRAY POLYESTER POWDER COATING INSIDE AND OUT OVER PAINT GRIP GALVANIZED STEEL

TYPE 4

TYPE 4 & 12 HINGED ENCLOSURE				STEEL PANEL (WHITE)	
Enclosure Size HxWxD	Qturn. Latches	Catalog Number	Weight	Catalog Number	Weight
24x24x6	2	24246N412	48	2424P	15
30x20x6	2	30206N412	51	3020P	16
30x24x6	2	30246N412	58	3024P	19
30x30x6	2	30306N412	70	3030P	19
36x24x6	2	36246N412	69	3624P	24
36x30x6	2	36306N412	84	3630P	30
36x36x6	2	36366N412	88	3636P	37
24x24x8	2	24248N412	52	2424P	15
24x30x8	2	24308N412	63	2430P	19
30x20x8	2	30208N412	55	3020P	16
30x24x8	2	30248N412	63	3024P	19
30x30x8	2	30308N412	75	3030P	19
36x24x8	2	36248N412	72	3624P	24
36x30x8	2	36308N412	90	3630P	30
36x36x8	2	36368N412	102	3636P	37
24x24x10	2	242410N412	56	2424P	15
24x30x10	2	243010N412	68	2430P	19
30x20x10	2	302010N412	61	3020P	16
30x24x10	2	302410N412	68	3024P	19
30x30x10	2	303010N412	80	3030P	19
36x24x10	2	362410N412	78	3624P	24
36x30x10	2	363010N412	96	3630P	30
36x36x10	2	363610N412	109	3636P	37
24x24x12	2	242412N412	61	2424P	15
30x24x12	2	302412N412	73	3024P	19
30x30x12	2	303012N412	89	3030P	19
36x24x12	2	362412N412	102	3624P	24
36x36x12	2	363612N412	117	3636P	37

Optional External Mounting Feet Part# MFKIT

TYPE 4 & 12 FLANGE MOUNTED DISCONNECT ENCLOSURES

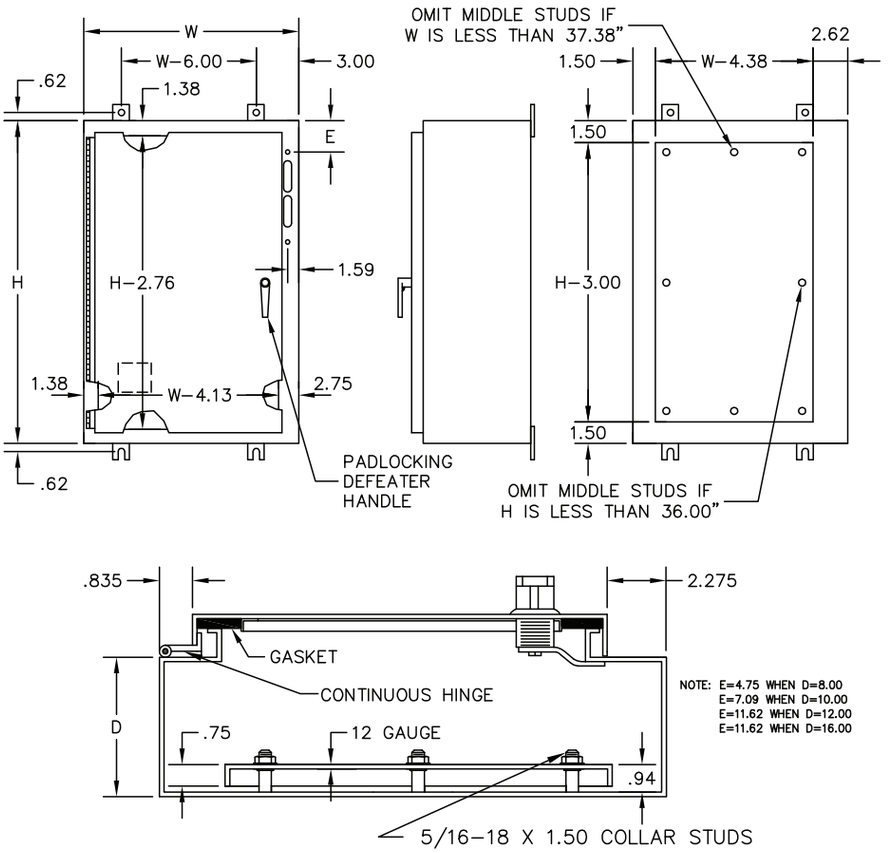

c UL us LISTED

CONSTRUCTION:
- 14 GAUGE PAINT GRIP GALVANIZED STEEL
- SEAMS CONTINUOUSLY WELDED AND GROUND SMOOTH
- ROLLED LIP AROUND ALL SIDES OF ENCLOSURE. OPENING EXCLUDES LIQUIDS AND CONTAMINANTS
- OIL RESISTANT DOOR GASKET
- STUDS PROVIDED FOR MOUNTING OPTIONAL PANEL
- REMOVABLE PRINT POCKET
- HOLES IN BODY FOR MOUNTING OPERATING HANDLE AND OPERATING MECHANISM
- 3-POINT LATCHING MECHANISM OPERATED BY PADLOCKING DEFEATER HANDLE

FINISH:
- ANSI 61 GRAY POLYESTER POWDER COATING INSIDE AND OUT

DESIGNED TO HOUSE THE FOLLOWING:

ALLEN-BRADLEY
- BULLETIN 1494V DISCONNECT SWITCHES WITH FLANGE-MOUNTED OPERATING MECHANISMS AND BULLETIN 1494V FLANGE-MOUNTED VARIABLE-DEPTH OPERATING MECHANISMS FOR CIRCUIT BREAKERS
- BULLETIN 140U FLEXIBLE CABLE OPERATING MECHANISMS FOR 140U MOLDED CASSE CIRCUIT BREAKERS
- BULLETIN 1494C CABLE-OPERATED DISCONNECT SWITCHES WITH FLANGE-MOUNTED HANDLES
- BULLETIN 194RC CABLE-OPERATED FLANGE-MOUNTED HANDLES FOR USE WITH THE NFPA 79 COMPLIANT 194R IEC ROTARY DISCONNECT SWITCHES

ABB CONTROLS
- FLANGE-MOUNTED VARIABLE-DEPTH OPERATING MECHANISMS FOR DISCONNECT SWITCHES AND CIRCUIT BREAKERS. ALSO THE CABLE VERSION FOR CIRCUIT BREAKERS.

EATON CUTLER-HAMMER
- TYPE C361 FLANGE-MOUNTED VARIABLE-DEPTH OPERATING MECHANISMS FOR DISCONNECT SWITCHES AND TYPE C371 FLANGE-MOUNTED VARIABLE-DEPTH OPERATING MECHANISMS FOR CIRCUIT BREAKERS

GENERAL ELECTRIC
- TYPE STDA FLANGE HANDLES AND VARIABLE-DEPTH OPERATING MECHANISMS FOR DISCONNECT SWITCHES AND CIRCUIT BREAKERS. ALSO SPECTRA FLEX™ CABLE OPERATORS FOR CIRCUIT BREAKERS

SIEMENS ITE
- MAX-FLEX™ FLANGE MOUNTED VARIABLE-DEPTH OPERATING HANDLES FOR CIRCUIT BREAKERS

SCHNEIDER SQUARE D®
- CLASS 9422 DISCONNECT SWITCHES WITH FLANGE-MOUNTED VARIABLE-DEPTH OPERATING MECHANISMS OR CABLE MECHANISMS AND CLASS 9422 FLANGE-MOUNTED VARIABLE-DEPTH OPERATING MECHANISMS FOR CIRCUIT BREAKERS.

TYPE 4 & 12 FLANGE MOUNTED DISCONNECT ENCLOSURE			STEEL PANEL (WHITE)	
Enclosure Size HxWxD	Catalog Number	Weight	Catalog Number	Weight
24x22x8	24228FDN43PT	48	2420P	13
24x26x8	24268FDN43PT	54	2424P	15
30x26x8	30268FDN43PT	65	3024P	19
36x26x8	36268FDN43PT	75	3624P	24
36x32x8	36328FDN43PT	93	3630P	30
42x32x12	423212FDN43PT	119	4230P	35
42x38x12	423812FDN43PT	136	4236P	43
48x38x12	483812FDN43PT	152	4836P	49
60x38x12	603812FDN43PT	183	6036P	61

TYPE 4X STAINLESS STEEL SCREW COVER "GASKETED" BOXES

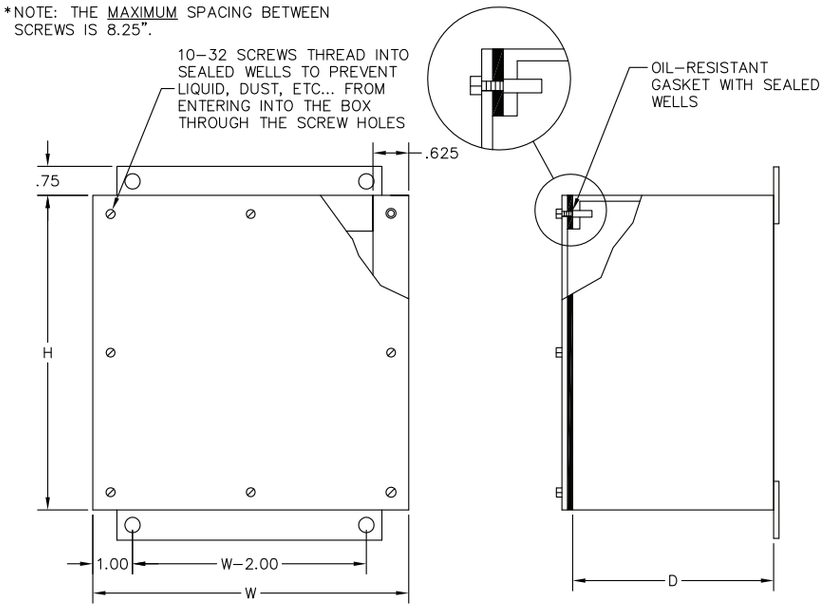

C UL US LISTED

CONSTRUCTION:
- CODE GAUGE TYPE 304 STAINLESS STEEL
- SEAMS CONTINUOUSLY WELDED AND GROUND SMOOTH
- REMOVABLE COVER FASTENED WITH STAINLESS STEEL SCREWS

FINISH:
- ENCLOSURES HAVE A BRUSHED FINISH

Enclosure Size HxWxD	Catalog Number	Weight
4x4x4	S444SGN4X	3
6x6x4	S664SGN4X	4
8x6x4	S864SGN4X	5
8x8x4	S884SGN4X	6
10x10x4	S10104SGN4X	8
10x8x4	S1084SGN4X	7
12x10x4	S12104SGN4X	9
12x12x4	S12124SGN4X	11
6x6x6	S666SGN4X	5
8x8x6	S886SGN4X	7
10x10x6	S10106SGN4X	9
12x12x6	S12126SGN4X	12
15x12x6	S15126SGN4X	14
15x15x6	S15156SGN4X	16
18x18x6	S18186SGN4X	21
24x18x6	S24186SGN4X	27
24x24x6	S24246SGN4X	41
8x8x8	S888SGN4X	8
12x12x8	S12128SGN4X	13
18x18x8	S18188SGN4X	24
24x24x8	S24248SGN4X	44
30x24x8	S30248SGN4X	48
30x30x8	S30308SGN4X	88
36x24x8	S36248SGN4X	63
36x30x8	S36308SGN4X	105
18x18x10	S181810SGN4X	25
24x24x10	S242410SGN4X	50
30x24x10	S302410SGN4X	53
30x30x10	S303010SGN4X	97
36x24x10	S362410SGN4X	69
18x18x12	S181812SGN4X	28
24x24x12	S242412SGN4X	53
30x30x12	S303012SGN4X	105
36x36x12	S363612SGN4X	138

NOTE: For **316L** Stainless Steel replace **"SGN4X"** suffix with **SGN4X-6**
FOR LARGE QUANTITIES CALL FACTORY

TYPE 4X ALUMINUM SCREW COVER "GASKETED" BOXES

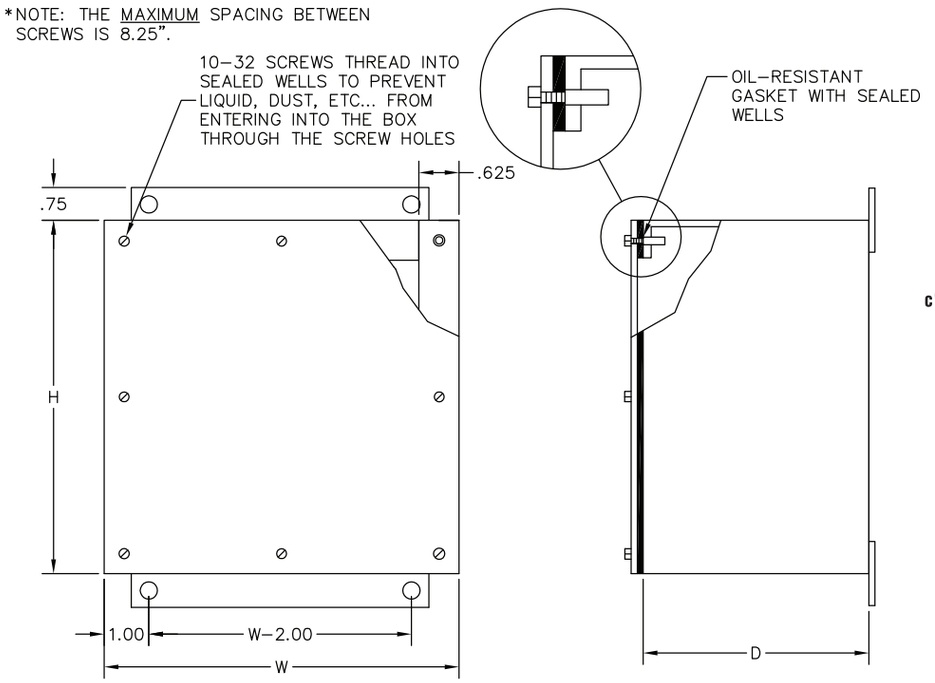

c UL us LISTED

CONSTRUCTION:
- TYPE 5052 H-32.080 ALUMINUM
- SEAMS CONTINUOUSLY WELDED AND GROUND SMOOTH
- REMOVABLE COVER FASTENED WITH STAINLESS STEEL SCREWS

FINISH:
- ENCLOSURES HAVE BRUSHED FINISH

TYPE 4

Enclosure Size HxWxD	Catalog Number	Weight
6x6x4	A664SGN4X	1.4
8x6x4	A864SGN4X	1.8
8x8x4	A884SGN4X	2.2
10x8x4	A1084SGN4X	2.6
10x10x4	A10104SGN4X	3
12x12x4	A12124SGN4X	4
8x8x6	A886SGN4X	2.8
10x8x6	A1086SGN4X	3.3
12x10x6	A12106SGN4X	4.3
12x12x6	A12126SGN4X	4.8
18x12x6	A18126SGN4X	7
24x18x6	A24186SGN4X	11
24x24x6	A24246SGN4X	14
12x12x8	A12128SGN4X	6
18x18x8	A18188SGN4X	9
24x24x8	A24248SGN4X	15

FOR LARGE QUANTITIES CALL FACTORY

STAINLESS STEEL JIC TYPE 4X & 12 CONTINUOUS HINGE - LESS PANEL

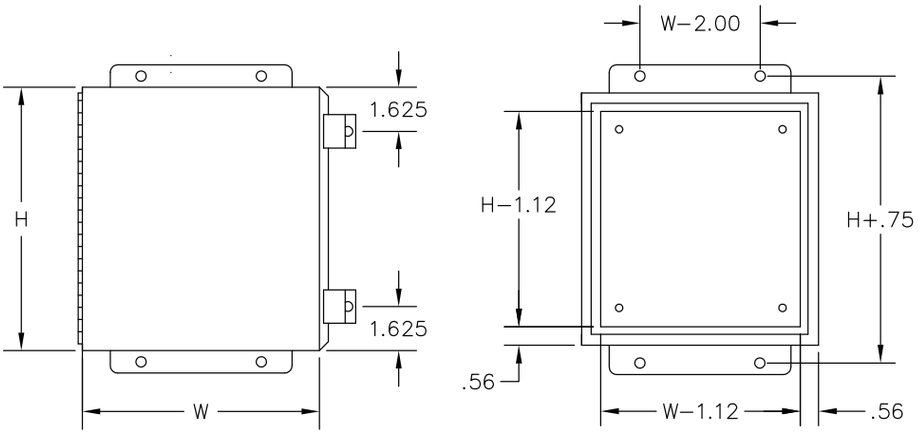

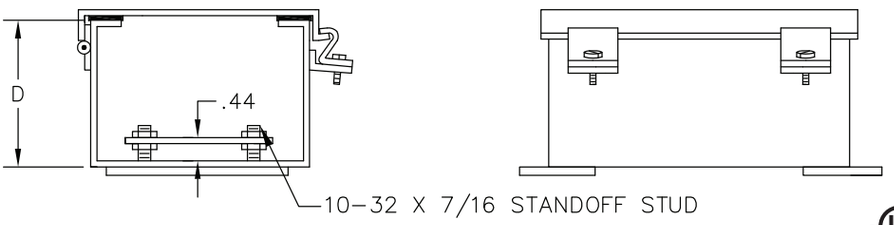

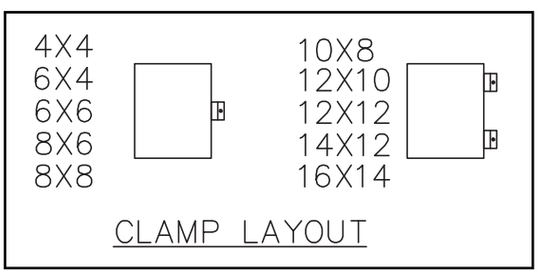

c UL us LISTED

CONSTRUCTION:
- CODE GAUGE TYPE 304 STAINLESS STEEL
- SEAMS CONTINUOUSLY WELDED AND GROUND SMOOTH
- STAINLESS STEEL SCREW CLAMPS ARE QUICK AND EASY TO OPERATE
- CONTINUOUS HINGE
- OIL RESISTANT GASKET
- OPTIONAL PANEL

FINISH:
- NUMBER 3 SMOOTH BRUSH FINISH

TYPE 4X

STAINLESS STEEL JIC TYPE 4X & 12 CONTINUOUS HINGE			STEEL PANEL (WHITE)	
Enclosure Size HxWxD	Catalog Number	Weight	Catalog Number	Weight
6x6x4	SJH664N4X12	5.5	66PJ	1
8x6x4	SJH864N4X12	7	86PJ	1
8x8x4	SJH884N4X12	9	88PJ	1
10x8x4	SJH1084N4X12	10.5	108PJ	1
10x10x4	SJH10104N4X12	12	1010PJ	2
8x8x6	SJH886N4X12	11	88PJ	1
10x8x6	SJH1086N4X12	13	108PJ	1
10x10x6	SJH10106N4X12	14	1010PJ	2
12x10x6	SJH12106N4X12	15	1210PJ	2
12x12x6	SJH12126N4X12	16	1212PJ	3
14x12x6	SJH14126N4X12	20	1412PJ	3
16x14x6	SJH16146N4X12	25	1614PJ	5

NOTE: FOR QUICK RELEASE LATCH SEE ACCESSORIES SECTION

NOTE: For **316L** Stainless Steel replace **"N4X"** suffix with **N4X-6**

STAINLESS STEEL JIC TYPE 4X CLAMP COVER - LESS PANEL

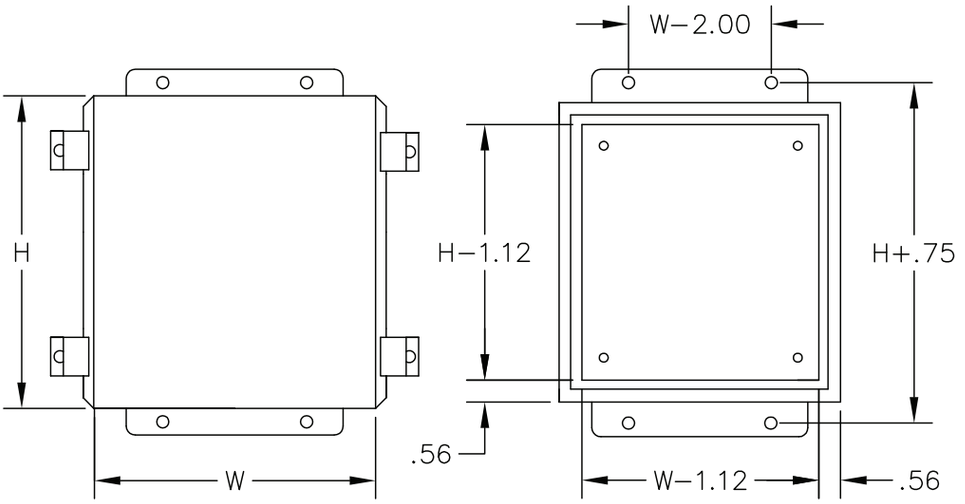

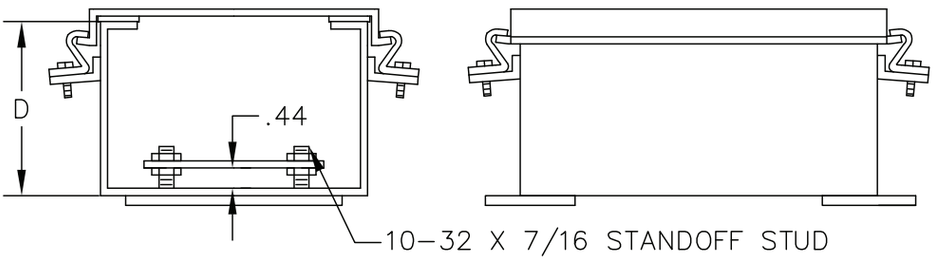

TYPE 4X

c UL us LISTED

CONSTRUCTION:
- CODE GAUGE TYPE 304 STAINLESS STEEL
- SEAMS CONTINUOUSLY WELDED AND GROUND SMOOTH
- SCREW CLAMPS ARE QUICK & EASY TO OPERATE.
- OIL RESISTANT GASKET
- STUDS PROVIDED FOR MOUNTING OPTIONAL PANEL

FINISH:
- NUMBER 3 SMOOTH BRUSH FINISH

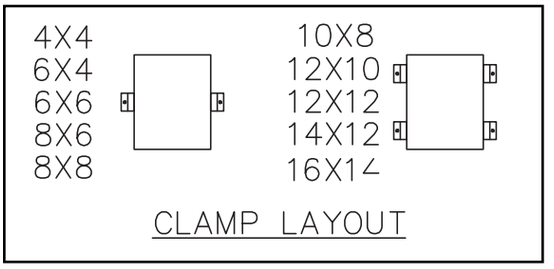

STAINLESS STEEL JIC TYPE 4X CLAMP COVER			STEEL PANEL (WHITE)	
Enclosure Size HxWxD	Catalog Number	Weight	Catalog Number	Weight
4x4x3	SJCC443N4X	8	N/A	N/A
6x4x4	SJCC644N4X	4	64PJ	1
6x6x4	SJCC664N4X	4	66PJ	1
8x6x4	SJCC864N4X	6	86PJ	1
10x8x4	SJCC1084N4X	9	108PJ	1
12x10x6	SJCC12106N4X	15	1210PJ	2
14x12x6	SJCC14126N4X	17	1412PJ	3
16x14x6	SJCC16146N4X	21	1614PJ	5

NOTE: FOR QUICK RELEASE LATCHES SEE ACCESSORIES SECTION

NOTE: For **316L** Stainless Steel add **"-6"** to catalog number.

STAINLESS STEEL SINGLE DOOR TYPE 4X ENCLOSURE - LESS PANEL WITH 3-POINT LATCH

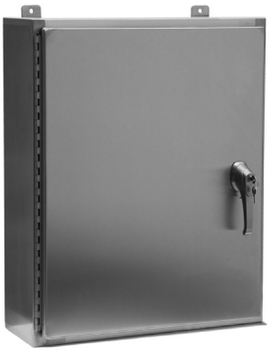

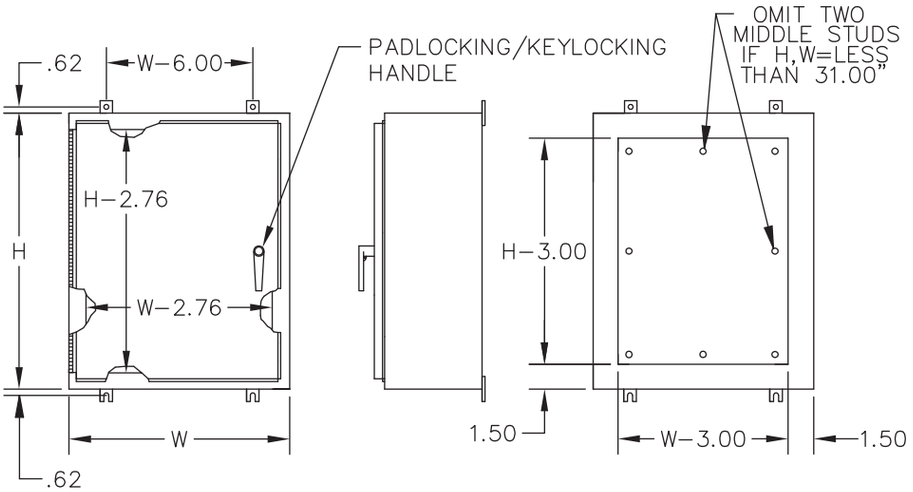

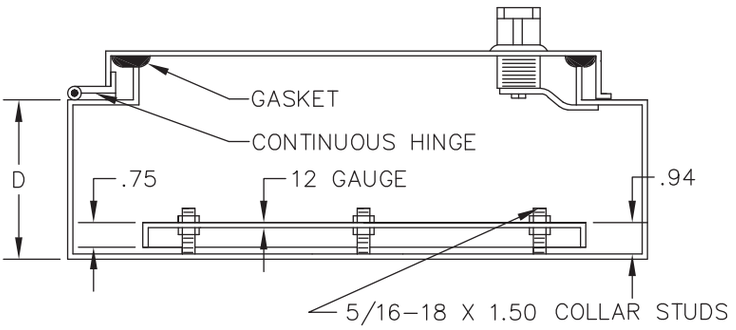

c UL us LISTED

CONSTRUCTION:
- 14 GAUGE TYPE 304 STAINLESS STEEL
- SEAMS CONTINUOUSLY WELDED AND GROUND SMOOTH
- 3-POINT LATCHING MECHANISM OPERATED BY KEYLOCKING/PADLOCKING L-HANDLE
- HEAVY GUAGE CONTINUOUS HINGE
- OIL RESISTANT GASKET
- STUDS PROVIDED FOR MOUNTING OPTIONAL PANEL

FINISH:
- NUMBER 3 SMOOTH BRUSH FINISH

TYPE 4X

STAINLESS STEEL SINGLE DOOR TYPE 4X ENCLOSURE			STEEL PANEL (WHITE)	
Enclosure Size HxWxD	Catalog Number	Weight	Catalog Number	Weight
24x20x6	S24206N4X3PT	48	2420P	13
24x20x8	S24208N4X3PT	52	2420P	13
24x24x8	S24248N4X3PT	59	2424P	15
30x24x8	S30248N4X3PT	70	3024P	19
30x30x8	S30308N4X3PT	83	3030P	24
36x24x8	S36248N4X3PT	79	3624P	24
36x30x8	S36308N4X3PT	97	3630P	30
48x36x8	S48368N4X3PT	144	4836P	49
24x20x10	S242010N4X3PT	57	2420P	13
36x30x10	S363010N4X3PT	103	3630P	30
48x36x10	S483610N4X3PT	152	4836P	49
24x24x12	S242412N4X3PT	68	2424P	15
30x24x12	S302412N4X3PT	80	3024P	19
36x30x12	S363012N4X3PT	109	3630P	30
36x36x12	S363612N4X3PT	124	3636P	37
42x36x12	S423612N4X3PT	139	4236P	43
48x36x12	S483612N4X3PT	159	4836P	49
60x36x12	S603612N4X3PT	185	6036P	61
48x36x16	S483616N4X3PT	171	4836P	49
60x36x16	S603616N4X3PT	203	6036P	61

NOTE: For **316L** Stainless Steel add **"-6"** to catalog number.

STAINLESS STEEL SINGLE DOOR-TYPE 4X ENCLOSURES - LESS PANEL

NOTE: MAXIMUM SPACING BETWEEN DOOR CLAMPS IS 15.00 INCHES

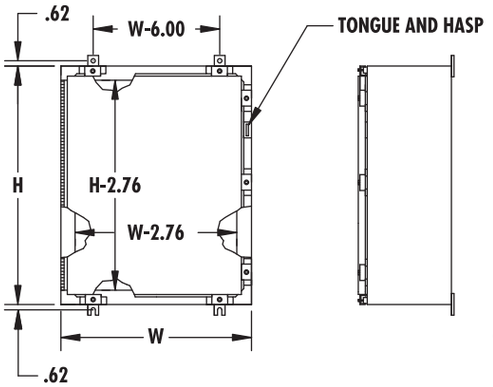

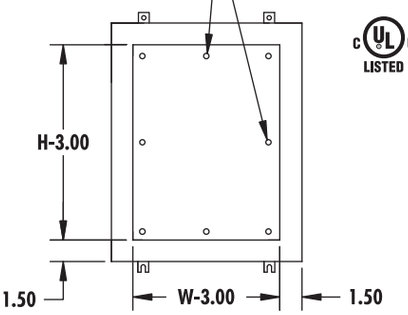

c UL us LISTED

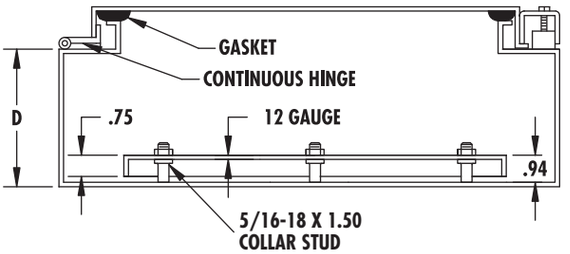

CONSTRUCTION:
- CODE GAUGE TYPE 304 STAINLESS STEEL
- SEAMS CONTINUOUSLY WELDED AND GROUND SMOOTH
- STAINLESS STEEL SCREWS AND CLAMPS ON THREE SIDES OF COVER ASSURE WATERTIGHT SEAL
- STAINLESS STEEL CONTINUOUS HINGE
- TONGUE AND HASP FOR PAD LOCKING
- OIL RESISTANT GASKET
- STUDS PROVIDED FOR MOUNTING OPTIONAL PANEL
- ALSO MEETS INDUSTRY STANDARDS FOR TYPE 12 USE

FINISH:
- ENCLOSURES HAVE A BRUSHED FINISH

TYPE 4X

STAINLESS STEEL SINGLE DOOR-TYPE 4X ENCLOSURE				STEEL PANEL (WHITE)	
Enclosure Size HxWxD	Catalog Number	Weight	Number of Clamps	Catalog Number	Weight
16x12x6	S16126N4X	23	4	1612P	4
16x16x6	S16166N4X	28	4	1616P	6
20x16x6	S20166N4X	33	4	2016P	9
20x20x6	S20206N4X	38	4	2020P	10
24x24x6	S24246N4X	44	5	2424P	15
16x12x8	S16128N4X	25	4	1612P	4
20x16x8	S20168N4X	33	4	2016P	9
24x16x8	S24168N4X	38	5	2416P	9
24x20x8	S24208N4X	44	5	2420P	13
24x24x8	S24248N4X	55	5	2424P	15
24x30x8	S24308N4X	66	7	2430P	19
30x20x8	S30208N4X	58	5	3020P	16
30x24x8	S30248N4X	66	5	3024P	19
36x24x8	S36248N4X	76	5	3624P	24
36x30x8	S36308N4X	95	7	3630P	30
42x36x8	S42368N4X	132	8	4236P	43
48x36x8	S48368N4X	143	8	4836P	49
20x16x10	S201610N4X	40	4	2016P	9
24x20x10	S242010N4X	53	5	2420P	13
36x24x10	S362410N4X	82	5	3624P	24
36x30x10	S363010N4X	101	7	3630P	30
42x30x10	S423010N4X	116	8	4230P	35
24x24x12	S242412N4X	64	5	2424P	15
30x24x12	S302412N4X	77	5	3024P	19
36x30x12	S363012N4X	107	7	3630P	30
36x36x12	S363612N4X	111	7	3636P	37
48x36x12	S483612N4X	162	8	4836P	49
60x36x12	S603612N4X	191	9	6036P	61

NOTE: FOR QUICK RELEASE LATCHES SEE ACCESSORIES SECTION

NOTE: For **316L** Stainless Steel replace **"N4X"** suffix with **N4X-6**

STAINLESS STEEL FREE STANDING SINGLE DOOR TYPE 4X ENCLOSURE - LESS PANEL WITH 3-POINT LATCH

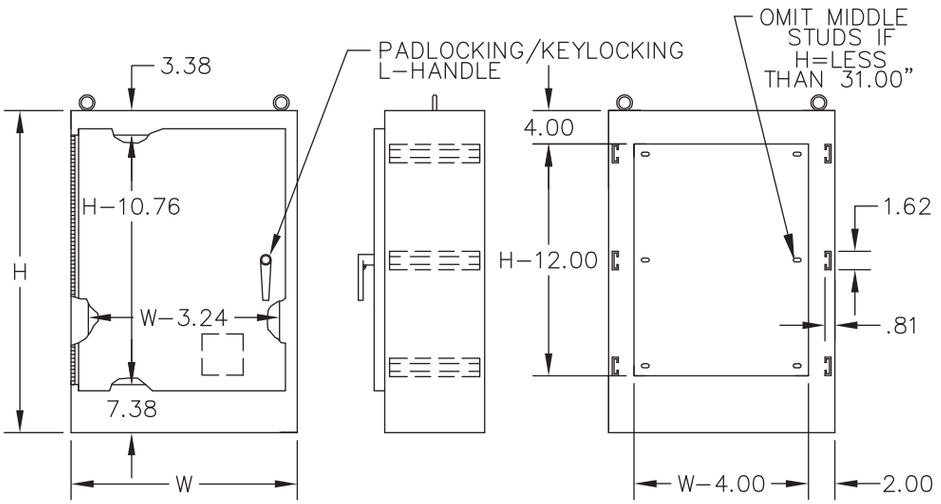

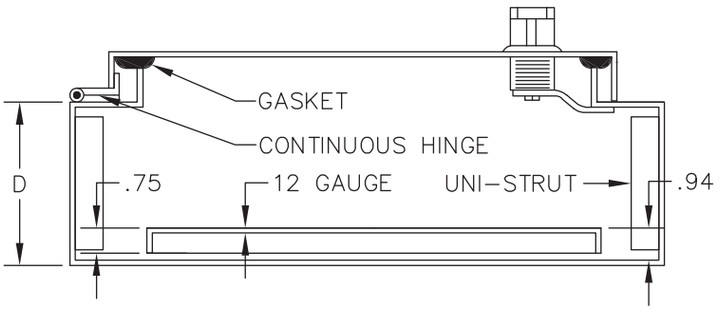

c UL us LISTED

CONSTRUCTION:
- 12 GAUGE TYPE 304 STAINLESS STEEL
- SEAMS CONTINUOUSLY WELDED AND GROUND SMOOTH
- 3-POINT LATCHING MECHANISM OPERATED BY KEYLOCKING/PADLOCKING L-HANDLE
- HEAVY GAUGE CONTINUOUS HINGE
- LIFTING EYES FOR EASY HANDLING
- REMOVABLE PRINT POCKET
- OIL-RESISTANT GASKET
- UNI-STRUT PROVIDED FOR MOUNTING OPTIONAL PANEL

FINISH:
- NUMBER 3 SMOOTH BRUSH FINISH

TYPE 4X

STAINLESS STEEL FREE STANDING SINGLE DOOR TYPE 4X			STEEL PANEL (WHITE)	
Enclosure Size HxWxD	Catalog Number	Weight	Catalog Number	Weight
60x24x18	SF602418N4X3PT	214	F6024P	58
72x24x18	SF722418N4X3PT	246	F7224P	65
72x30x18	SF723018N4X3PT	285	F7230P	74
72x36x18	SF723618N4X3PT	325	F7236P	98
90x24x20	SF902420N4X3PT	324	F9024P	74
90x36x20	SF903620N4X3PT	406	F9036P	108
60x36x20	SF603620N4X3PT	302	F6036P	87
72x24x24	SF722424N4X3PT	300	F7224P	65
72x30x24	SF723024N4X3PT	335	F7230P	74
72x36x24	SF723624N4X3PT	370	F7236P	98
90x36x24	SF903624N4X3PT	440	F9036P	108
72x36x30	SF723630N4X3PT	420	F7236P	98
72x36x36	SF723636N4X3PT	465	F7236P	98
90x36x36	SF903636N4X3PT	525	F9036P	108

NOTE: For **316L** Stainless Steel add **"-6"** to catalog number.

STAINLESS STEEL DOUBLE DOOR WALL MOUNT TYPE 4X ENCLOSURE - LESS PANEL WITH 3-POINT LATCH

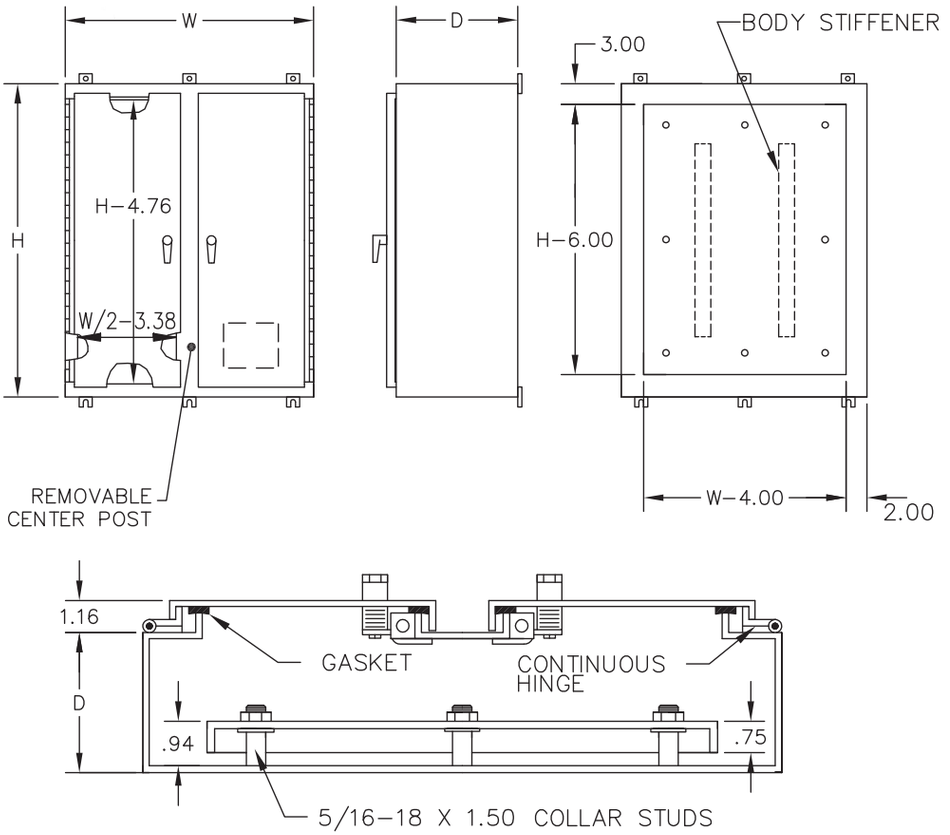

c UL us LISTED

CONSTRUCTION:
- CODE GAUGE TYPE 304 STAINLESS STEEL
- SEAMS CONTINUOUSLY WELDED AND GROUND SMOOTH
- REMOVABLE CENTERPOST FOR EASY PANEL INSTALLATION
- HEAVY-DUTY LIFTING EYES
- 3-POINT LATCHING MECHANISM OPERATED BY KEYLOCKING/PADLOCKING L-HANDLE
- HEAVY GAUGE CONTINUOUS HINGE.
- MOUNTING FEET
- REMOVABLE PRINT POCKET
- OIL-RESISTANT GASKET
- STUDS PROVIDED FOR MOUNTING OPTIONAL PANEL

FINISH:
- NUMBER 3 SMOOTH BRUSH FINISH

TYPE 4X

STAINLESS STEEL DOUBLE DOOR WALL MOUNT TYPE 4X			STEEL PANEL (WHITE)	
Enclosure Size HxWxD	Catalog Number	Weight	Catalog Number	Weight
24x42x8	SDW24428N4X3PT		DW2442P	25
24x48x8	SDW24488N4X3PT		DW2448P	31
30x42x10	SDW304210N4X3PT		DW3042P	35
30x48x10	SDW304810N4X3PT		DW3048P	40
30x60x10	SDW306010N4X3PT		DW3060P	50
36x42x12	SDW364212N4X3PT		DW3642P	43
36x48x12	SDW364812N4X3PT		DW3648P	49
36x60x12	SDW366012N4X3PT		DW3660P	61
42x42x12	SDW424212N4X3PT		DW4242P	50
42x48x12	SDW424812N4X3PT		DW4248P	58
42x60x12	SDW426012N4X3PT		DW4260P	89
48x48x12	SDW484812N4X3PT		DW4848PN4	80

NOTE: For **316L** Stainless Steel add **"-6"** to catalog number.

STAINLESS STEEL DOUBLE DOOR FLOOR MOUNT TYPE 4X ENCLOSURE - LESS PANEL WITH 3-POINT LATCH

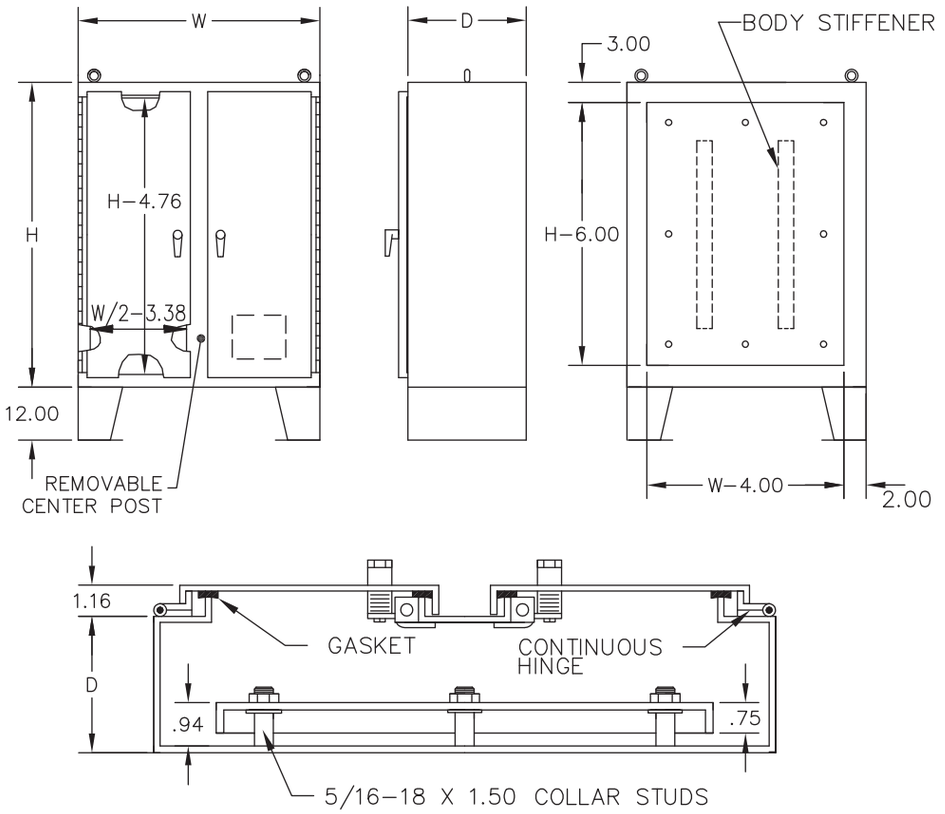

c UL us LISTED

CONSTRUCTION:
- 12 GAUGE TYPE 304 STAINLESS STEEL
- SEAMS CONTINUOUSLY WELDED AND GROUND SMOOTH
- REMOVABLE CENTERPOST FOR EASY PANEL INSTALLATION
- HEAVY-DUTY LIFTING EYES
- 3-POINT LATCHING MECHANISM OPERATED BY KEYLOCKING/PADLOCKING L-HANDLE
- HEAVY GAUGE CONTINUOUS HINGE
- 12 INCH FLOOR STANDS ARE WELDED TO ENCLOSURE
- REMOVABLE PRINT POCKET
- OIL-RESISTANT GASKET
- STUDS PROVIDED FOR MOUNTING OPTIONAL PANEL

FINISH:
- NUMBER 3 SMOOTH BRUSH FINISH

TYPE 4X

STAINLESS STEEL DOUBLE DOOR FLOOR MOUNT TYPE 4X			STEEL PANEL (WHITE)	
Enclosure Size HxWxD	Catalog Number	Weight	Catalog Number	Weight
62x48x12	SD624812N4X3PT	371	D6248PN4	103
62x60x12	SD626012N4X3PT	507	D6260PN4	130
74x60x12	SD746012N4X3PT	626	D7460PN4	158
74x72x12	SD747212N4X3PT	626	D7472PN4	191
62x48x18	SD624818N4X3PT	412	D6248PN4	103
74x72x24	SD747224N4X3PT	736	D7472PN4	191

NOTE: For **316L** Stainless Steel add **"-6"** to catalog number.

STAINLESS STEEL-DOUBLE FLOOR MOUNTED TYPE 4X ENCLOSURES - LESS PANEL

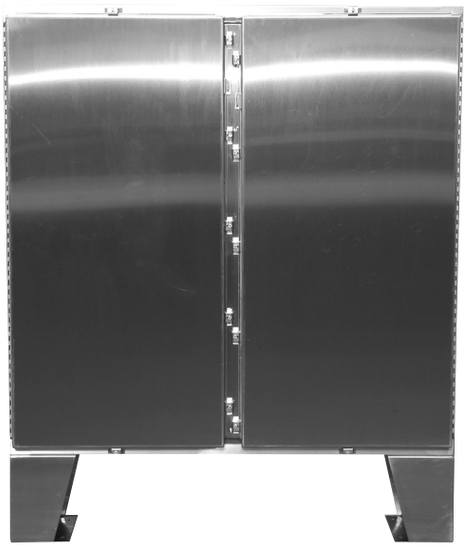

C UL US LISTED

CONSTRUCTION:
- 12 GAUGE TYPE 304 STAINLESS STEEL
- SEAMS CONTINUOUSLY WELDED AND GROUND SMOOTH
- REMOVABLE CENTERPOST FOR EASY PANEL INSTALLATION
- HEAVY DUTY LIFTING EYES
- STAINLESS STEEL SCREWS AND CLAMPS ON THREE SIDES OF EACH DOOR ASSURE WATER-TIGHT SEAL
- HEAVY GAUGE STAINLESS STEEL CONTINUOUS HINGE
- 12 INCH FLOOR STANDS ARE WELDED TO ENCLOSURE
- TONGUE AND HASP FOR PADLOCKING
- REMOVABLE PRINT POCKET
- OIL RESISTANT GASKET
- STUDS PROVIDED FOR MOUNTING OPTIONAL PANEL
- ALSO MEETS INDUSTRY STANDARDS FOR TYPE 12 USE

FINISH:
- ENCLOSURES HAVE A BRUSHED FINISH

TYPE 4X

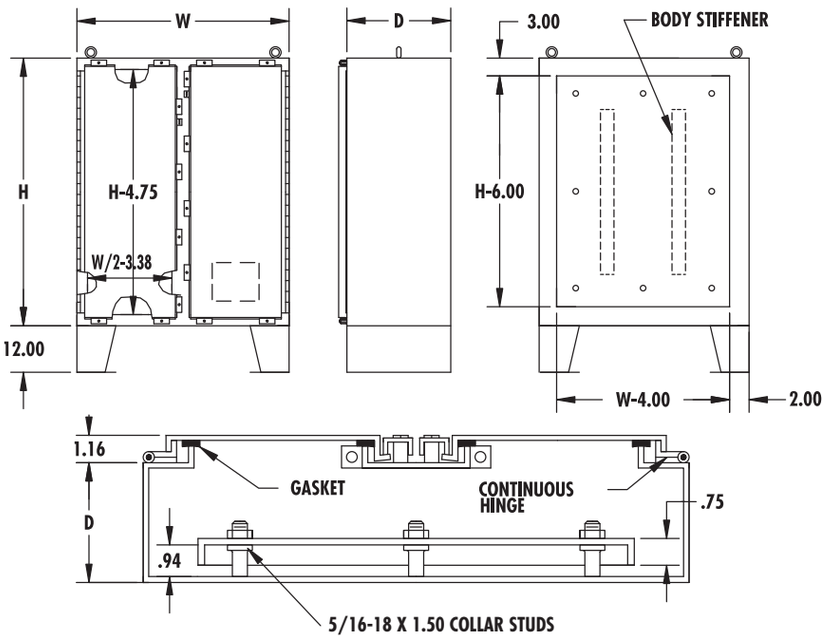

STAINLESS STEEL-DOUBLE FLOOR MOUNTED TYPE 4X ENCLOSURES				STEEL PANEL (WHITE)	
Enclosure Size HxWxD	Catalog Number	Weight	Number of Clamps	Catalog Number	Weight
62x48x10	SD624810N4X	357	22	D6248PN4	103
62x60x12	SD626012N4X	507	22	D6260PN4	130
74x72x12	SD747212N4X	626	24	D7472PN4	191

NOTE: For **316L** Stainless Steel replace **"N4X"** suffix with **N4X-6**

STAINLESS STEEL FREE STANDING DOUBLE DOOR TYPE 4X ENCLOSURE - LESS PANEL WITH 3-POINT LATCH

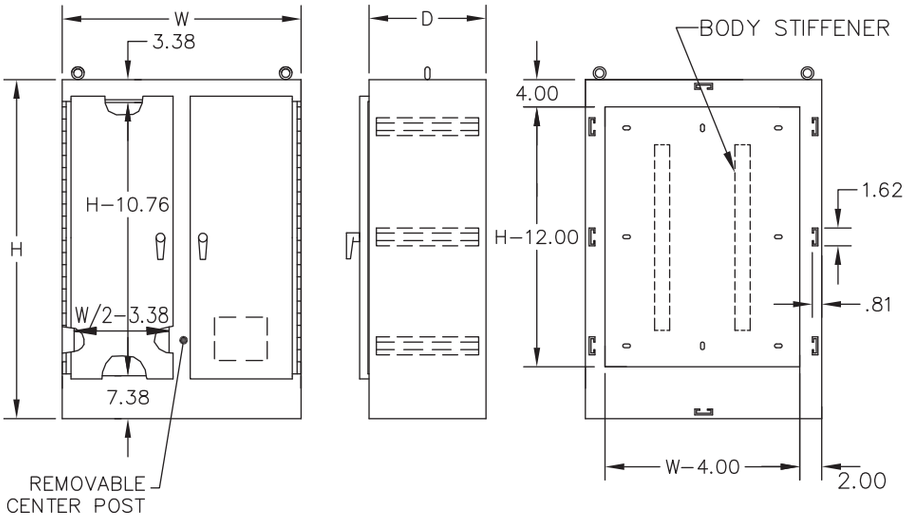

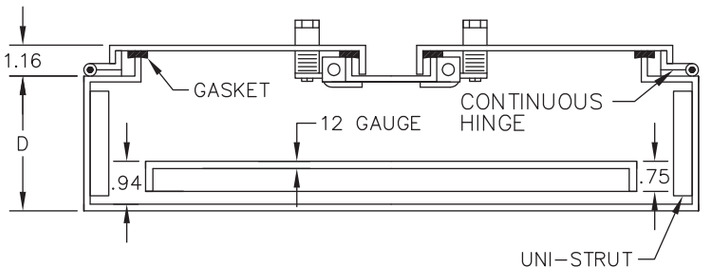

c UL us LISTED

CONSTRUCTION:
- 12 GAUGE TYPE 304 STAINLESS STEEL
- SEAMS CONTINUOUSLY WELDED AND GROUND SMOOTH
- REMOVABLE CENTERPOST FOR EASY PANEL INSTALLATION
- HEAVY-DUTY LIFTING EYES
- 3-POINT LATCHING MECHANISM OPERATED BY KEYLOCKING/PADLOCKING L-HANDLE
- HEAVY GAUGE CONTINUOUS HINGE.
- REMOVABLE PRINT POCKET
- OIL-RESISTANT GASKET
- UNI-STRUT PROVIDED FOR MOUNTING OPTIONAL PANEL

FINISH:
- NUMBER 3 SMOOTH BRUSH FINISH

TYPE 4X

STAINLESS STEEL FREE STANDING DOUBLE DOOR TYPE 4X			STEEL PANEL (WHITE)	
Enclosure Size HxWxD	Catalog Number	Weight	Catalog Number	Weight
60x48x18	SDF604818N4X3PT		DF6048P	
72x48x18	SDF724818N4X3PT		DF7248P	131
72x60x18	SDF726018N4X3PT		DF7260P	158
72x72x18	SDF727218N4X3PT		DF7272P	187
90x48x20	SDF904820N4X3PT		DF9048P	184
90x72x20	SDF907220N4X3PT		DF9072P	238
72x48x24	SDF724824N4X3PT		DF7248P	131
72x60x24	SDF726024N4X3PT		DF7260P	158
72x72x24	SDF727224N4X3PT		DF7272P	187
90x72x24	SDF907224N4X3PT		DF9072P	238
72x60x36	SDF726036N4X3PT		DF7260P	158
90X72X36	SDF907236N4X3PT		DF9072P	238

NOTE: For **316L** Stainless Steel add **"-6"** to catalog number.

STAINLESS STEEL JIC TYPE 4X HINGED TROUGH

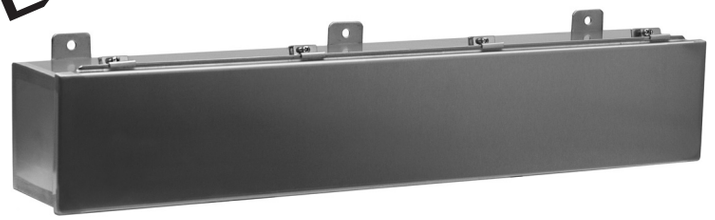

c UL us LISTED

CONSTRUCTION:
- CODE GAUGE TYPE 304 STAINLESS STEEL
- SEAMS CONTINUOUSLY WELDED AND GROUND SMOOTH
- BUTT HINGES
- SCREW CLAMPS ARE QUICK AND EASY TO OPERATE
- OIL-RESISTANT GASKET

FINISH:
- NUMBER 3 SMOOTH BRUSH FINISH

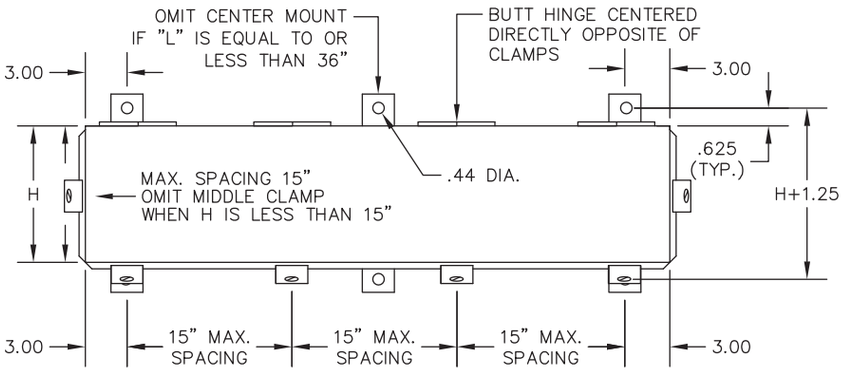

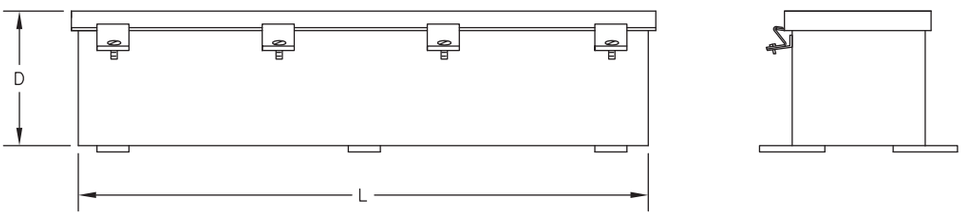

TYPE 4X

Trough Size HxDxL	Catalog Number	Weight
4x4x12	S1-44JON4X	6
4x4x24	S2-44JON4X	10
4x4x36	S3-44JON4X	16
4x4x48	S4-44JON4X	20
4x4x60	S5-44JON4X	28
4x4x72	S6-44JON4X	30
6x6x12	S1-66JON4X	9
6x6x24	S2-66JON4X	16
6x6x36	S3-66JON4X	23
6x6x48	S4-66JON4X	29
6x6x60	S5-66JON4X	32
6x6x72	S6-66JON4X	42
8x8x12	S1-88JON4X	13
8x8x24	S2-88JON4X	23
8x8x36	S3-88JON4X	32
8x8x48	S4-88JON4X	40
8x8x60	S5-88JON4X	49
8x8x72	S6-88JON4X	60
12x12x24	S2-1212JON4X	34
12x12x36	S3-1212JON4X	49
12x12x48	S4-1212JON4X	60
12x12x60	S5-1212JON4X	73
12x12x72	S6-1212JON4X	87

NOTE: For **316L** Stainless Steel add **"-6"** to catalog number.

TYPE 4X STAINLESS STEEL FLANGE MOUNTED DISCONNECT ENCLOSURES

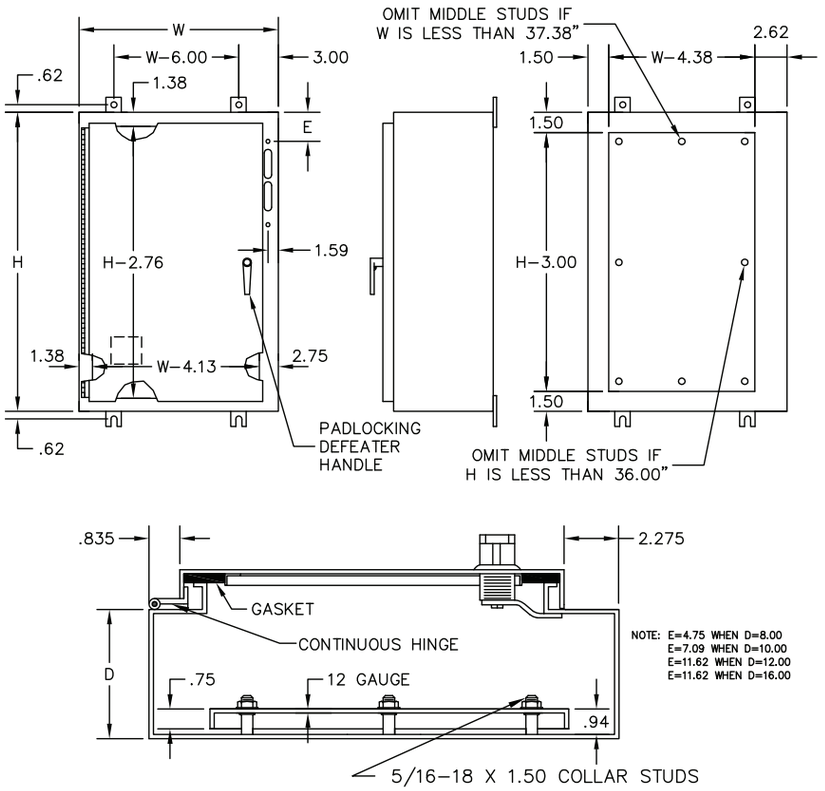

c UL us LISTED

CONSTRUCTION:
- 14 GAUGE TYPE 304 STAINLESS STEEL
- SEAMS CONTINUOUSLY WELDED AND GROUND SMOOTH
- ROLLED LIP AROUND ALL SIDES OF ENCLOSURE OPENING EXCLUDES LIQUIDS AND CONTAMINANTS
- OIL RESISTANT DOOR GASKET
- STUDS PROVIDED FOR MOUNTING OPTIONAL PANEL
- REMOVABLE PRINT POCKET
- HOLES IN BODY FOR MOUNTING OPERATING MECHANISM
- 3-POINT LATCHING MECHANISM OPERATED BY PADLOCKING DEFEATER HANDLE

FINISH:
- NUMBER 3 SMOOTH BRUSH FINISH

TYPE 4X

DESIGNED TO HOUSE THE FOLLOWING:

ALLEN-BRADLEY
- BULLETIN 1494V DISCONNECT SWITCHES WITH FLANGE-MOUNTED OPERATING MECHANISMS AND BULLETIN 1494V FLANGE-MOUNTED VARIABLE-DEPTH OPERATING MECHANISMS FOR CIRCUIT BREAKERS
- BULLETIN 140U FLEXIBLE CABLE OPERATING MECHANISMS FOR 140U MOLDED CASSE CIRCUIT BREAKERS
- BULLETIN 1494C CABLE-OPERATED DISCONNECT SWITCHES WITH FLANGE-MOUNTED HANDLES
- BULLETIN 194RC CABLE-OPERATED FLANGE-MOUNTED HANDLES FOR USE WITH THE NFPA 79 COMPLIANT 194R IEC ROTARY DISCONNECT SWITCHES

ABB CONTROLS
- FLANGE-MOUNTED VARIABLE-DEPTH OPERATING MECHANISMS FOR DISCONNECT SWITCHES AND CIRCUIT BREAKERS. ALSO THE CABLE VERSION FOR CIRCUIT BREAKERS

EATON CUTLER-HAMMER
- TYPE C361 FLANGE-MOUNTED VARIABLE-DEPTH OPERATING MECHANISMS FOR DISCONNECT SWITCHES AND TYPE C371 FLANGE-MOUNTED VARIABLE-DEPTH OPERATING MECHANISMS FOR CIRCUIT BREAKERS

GENERAL ELECTRIC
- TYPE STDA FLANGE HANDLES AND VARIABLE-DEPTH OPERATING MECHANISMS FOR DISCONNECT SWITCHES AND CIRCUIT BREAKERS. ALSO SPECTRA FLEX™ CABLE OPERATORS FOR CIRCUIT BREAKERS

SIEMENS ITE
- MAX-FLEX™ FLANGE MOUNTED VARIABLE-DEPTH OPERATING HANDLES FOR CIRCUIT BREAKERS

SCHNEIDER SQUARE D®
- CLASS 9422 DISCONNECT SWITCHES WITH FLANGE-MOUNTED VARIABLE-DEPTH OPERATING MECHANISMS OR CABLE MECHANISMS AND CLASS 9422 FLANGE-MOUNTED VARIABLE-DEPTH OPERATING MECHANISMS FOR CIRCUIT BREAKERS

STAINLESS STEEL FLANGE MOUNTED DISCONNECT ENCL.			STEEL PANEL (WHITE)	
Enclosure Size HxWxD	Catalog Number	Weight	Catalog Number	Weight
24x22x8	S24228FDN4X3PT	48	2420P	13
24x26x8	S24268FDN4X3PT	54	2424P	15
30x26x8	S30268FDN4X3PT	65	3026P	19
36x26x8	S36268FDN4X3PT	75	3624P	24
36x32x8	S36328FDN4X3PT	93	3630P	30
42x32x12	S423212FDN4X3PT	119	4230P	35
42x38x12	S423812FDN4X3PT	136	4236P	43
48x38x12	S483812FDN4X3PT	152	4836P	49
60x38x12	S603812FDN4X3PT	183	6036P	61

NOTE: For **316L** Stainless Steel add **"-6"** to catalog number.

STAINLESS STEEL TYPE 4X PULL THRU WIREWAY

NOTE:MAXIMUM SPACING BETWEEN CLAMPS ARE 15.00 INCHES.

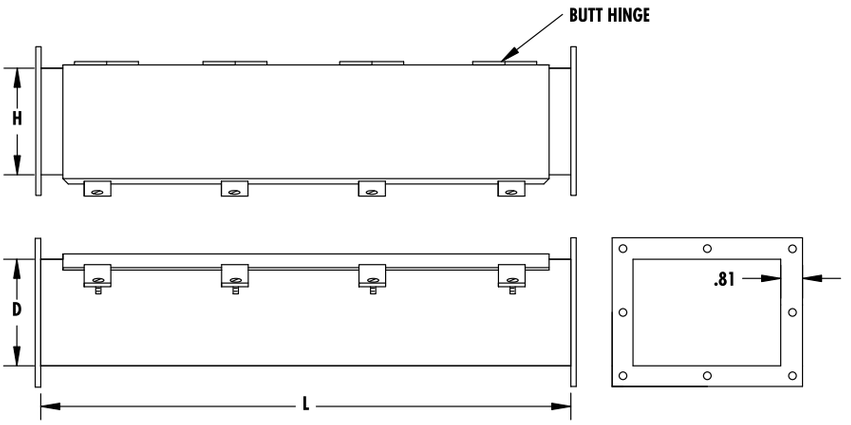

c UL us LISTED

CONSTRUCTION:
- CODE GAUGE TYPE 304 STAINLESS STEEL
- 12 GAUGE TYPE 304 STAINLESS STEEL END FLANGES
- SEAMS CONTINUOUSLY WELDED AND GROUND SMOOTH
- STAINLESS STEEL BUTT HINGE
- SCREW CLAMPS ARE QUICK AND EASY TO OPERATE
- OIL RESISTANT GASKET
- GASKET POSITIONED BETWEEN FLANGES WHEN SECTION AND FITTINGS ARE BOLTED TOGETHER
- ALSO MEETS INDUSTRY STANDARDS FOR TYPE 12 USE

FINISH:
- WIREWAY HAVE A BRUSHED FINISH

TYPE 4X

Wireway Size HxDxL	Catalog Number	Weight
4x4x12	S1-44P	7
4x4x24	S2-44P	12
4x4x36	S3-44P	17
4x4x48	S4-44P	21
4x4x60	S5-44P	26
4x4x120	S10-44P	52
FITTINGS		
90L	S4-90P	5
45L	S4-45P	3
Tee	S4-TP	6
Cross	S4-CP	8
End Plate	S4-EPP	1
6" Nipple	S4-N6P	3
Box Connector	S4-BCP	1
Drop Hanger	S4-DHP	1
Bracket Hanger	S4-BHP	1
6x6x12	S1-66P	10
6x6x24	S2-66P	18
6x6x36	S3-66P	24
6x6x48	S4-66P	32
6x6x60	S5-66P	40
6x6x120	S10-66P	78
FITTINGS		
90L	S6-90P	8
45L	S6-45P	6
Tee	S6-TP	10
Cross	S6-CP	13
End Plate	S6-EPP	3
6" Nipple	S6-N6P	5
Box Connector	S6-BCP	1
Reducer	S6-RPN4X	3
Drop Hanger	S6-DHP	2
Bracket Hanger	S6-BHP	3

NOTE: For **316L** Stainless Steel replace **"P"** suffix with **P-6**

FOR LARGE QUANTITIES CALL FACTORY

ALUMINUM JIC TYPE 4X & 12 CONTINUOUS HINGE - LESS PANEL

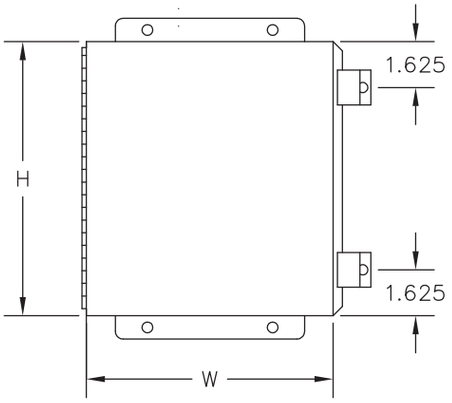

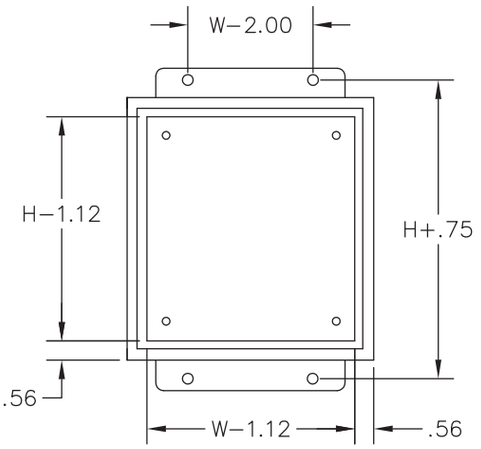

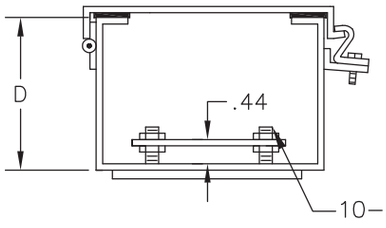

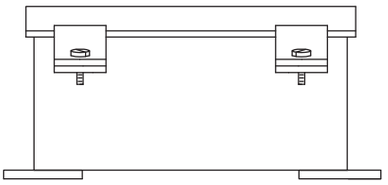

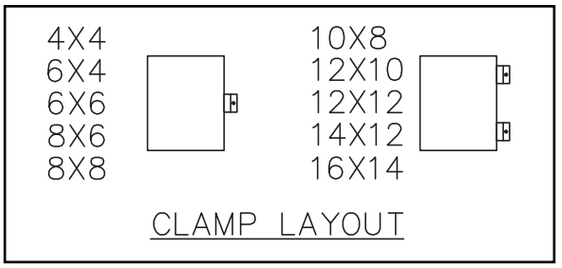

CONSTRUCTION:
- TYPE 5052 H-32080 ALUMINUM
- SEAMS CONTINUOUSLY WELDED AND GROUND SMOOTH
- STAINLESS STEEL SCREW CLAMPS ARE QUICK AND EASY TO OPERATE ENSURING A WATERTIGHT SEAL
- CONTINUOUS HINGE
- OIL RESISTANT GASKET
- OPTIONAL PANEL

FINISH:
- ENCLOSURES HAVE A BRUSHED FINISH

TYPE 4X

ALUMINUM JIC TYPE 4X & 12 CONTINUOUS HINGE			STEEL PANEL (WHITE)	
Enclosure Size HxWxD	Catalog Number	Weight	Catalog Number	Weight
6x6x4	AJH664N4X12	2.5	66PJ	1
8x6x4	AJH864N4X12	2.5	86PJ	1
10x8x4	AJH1084N4X12	4	108PJ	1
12x10x6	AJH12106N4X12	6	1210PJ	2
14x12x6	AJH14126N4X12	8	1412PJ	3
16x14x6	AJH16146N4X12	11	1614PJ	5

NOTE: FOR QUICK RELEASE LATCHES SEE ACCESSORIES SECTION

NOTE: FOR ALUMINUM PANELS SEE ACCESSORIES SECTION

FOR LARGE QUANTITIES CALL FACTORY

ALUMINUM SINGLE DOOR - TYPE 4X ENCLOSURES - LESS PANEL

NOTE: MAXIMUM SPACING BETWEEN DOOR CLAMPS IS 15.00 INCHES

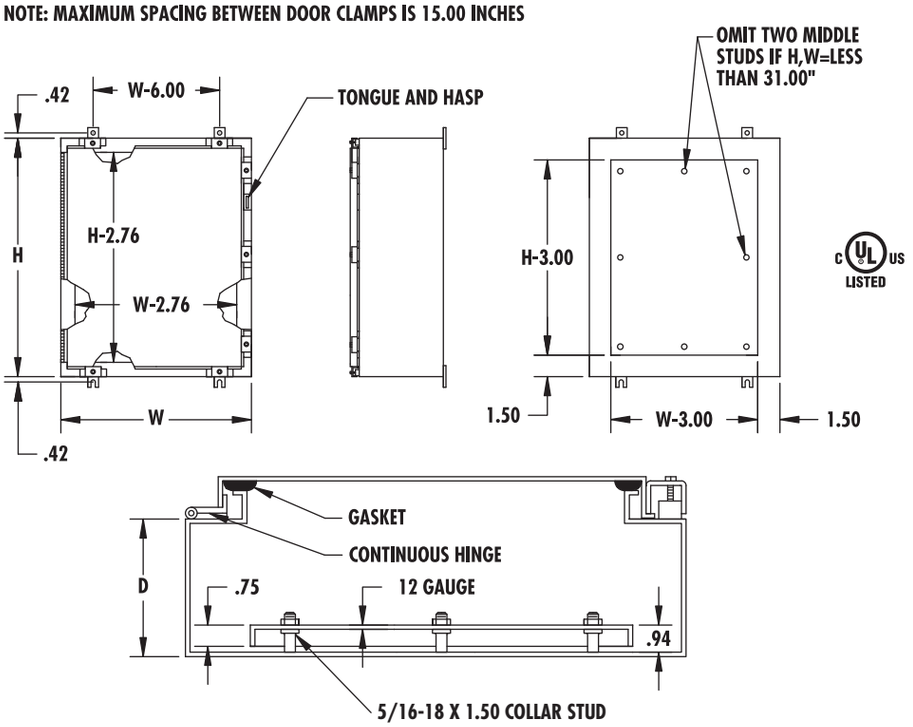

c UL us LISTED

CONSTRUCTION:
- TYPE 5052 H-32.080 ALUMINUM
- SEAMS CONTINUOUSLY WELDED AND GROUND SMOOTH
- STAINLESS STEEL SCREWS AND CLAMPS ON THREE SIDES OF COVER ASSURE WATERTIGHT SEAL
- ALUMINUM CONTINUOUS HINGE.
- OIL RESISTANT GASKET
- TONGUE AND HASP FOR PAD LOCKING
- STUDS PROVIDED FOR MOUNTING OPTIONAL PANEL
- ALSO MEETS INDUSTRY STANDARDS FOR TYPE 12 USE

FINISH:
- ENCLOSURES HAVE A BRUSHED FINISH

TYPE 4X

ALUMINUM SINGLE DOOR-CONTINUOUS HINGE TYPE 4X ENCLOSURES				STEEL PANEL (WHITE)	
Enclosure Size HxWxD	Catalog Number	Weight	Number of Clamps	Catalog Number	Weight
16x12x6	A16126N4X	9	4	1612P	4
20x16x6	A20166N4X	13	4	2016P	9
20x20x6	A20206N4X	16	4	2020P	10
24x20x6	A24206N4X	18	5	2420P	13
24x24x8	A24248N4X	22	5	2424P	15
20x16x10	A201610N4X	16	4	2016P	9
24x20x10	A242010N4X	22	5	2420P	13

NOTE: FOR QUICK RELEASE LATCHES SEE ACCESSORIES SECTION
NOTE: FOR ALUMINUM PANELS SEE ACCESSORIES SECTION
FOR LARGE QUANTITIES CALL FACTORY

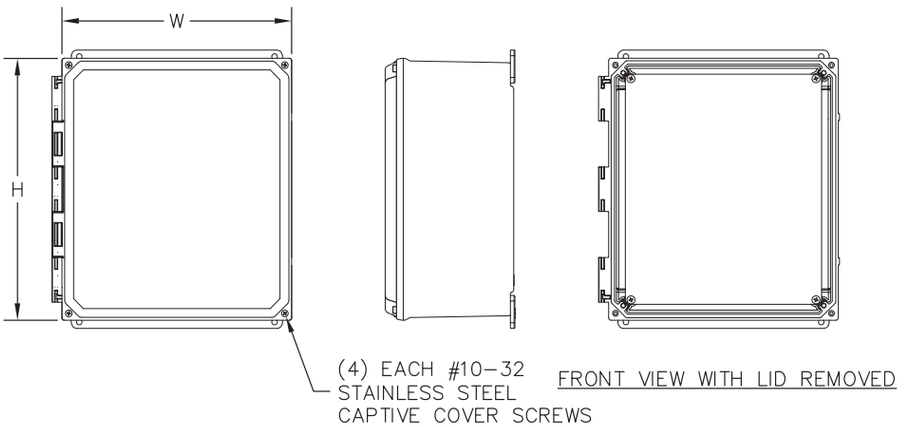

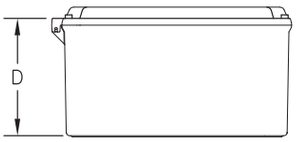

c UL us LISTED

CONSTRUCTION:
- CAPTIVE STAINLESS STEEL COVER SCREWS
- GASKET MATERIAL MADE OF CLOSED-CELL NEOPRENE CORD
- 10 - 32 THREADED INSERTS ARE INSTALLED FOR OPTIONAL BACK PANEL
- UV STABILIZED MATERIAL FOR OUTDOOR USE
- INJECTION MOLDED POLYCARBONATE THERMOPLASTIC OPAQUE COVER, ENCLOSURE BASE, FEET, AND FLANGES
- OPAQUE COVER, BASE, FEET, AND FLANGES – LIGHT GRAY COLOR (RAL 7035)

TYPE 4X

NON-METALLIC TYPE 4X SCREW COVER BOXES			GALVANIZED PANEL	
Enclosure Size HxWxD	Catalog Number	Weight	Catalog Number	Weight
5.93x6.16x3.98	PJSC664	2	PL66P	1
7.94x6.16x3.98	PJSC864	3	PL86P	1
9.93x8.15x3.98	PJSC1084	4	PL108P	1
11.92x10.15x5.98	PJSC12106	5	PL1210P	2
13.94x12.16x5.98	PJSC14126	7	PL1412P	3

c UL us LISTED

CONSTRUCTION:
- CAPTIVE STAINLESS STEEL COVER SCREWS
- GASKET MATERIAL MADE OF CLOSED-CELL NEOPRENE CORD
- 10 - 32 THREADED INSERTS ARE INSTALLED FOR OPTIONAL BACK PANEL
- UV STABILIZED MATERIAL FOR OUTDOOR USE
- INJECTION MOLDED POLYCARBONATE THERMOPLASTIC OPAQUE COVER, ENCLOSURE BASE, FEET, AND FLANGES
- OPAQUE COVER, BASE, FEET, AND FLANGES – LIGHT GRAY COLOR (RAL 7035)

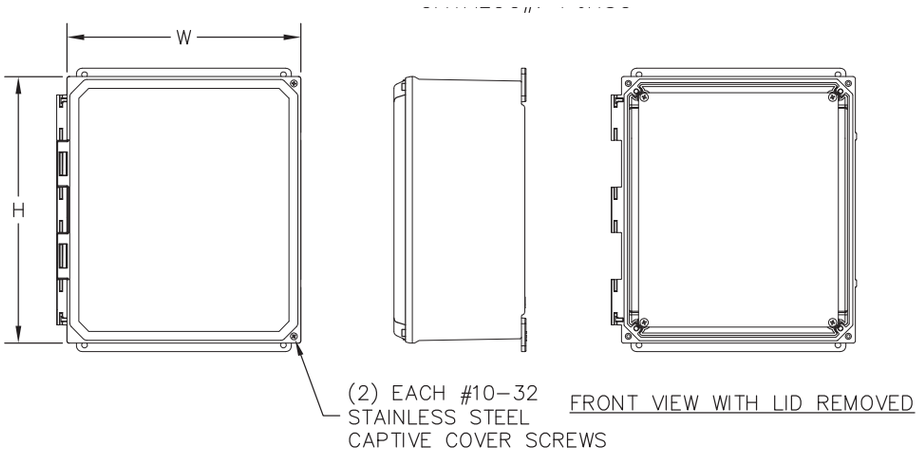

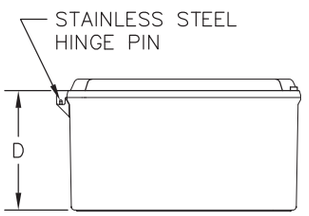

TYPE 4X

NON-METALLIC TYPE 4X SCREW COVER BOXES			GALVANIZED PANEL	
Enclosure Size HxWxD	Catalog Number	Weight	Catalog Number	Weight
5.93x6.16x3.98	PJHSC664	2	PL66P	1
7.94x6.16x3.98	PJHSC864	3	PL86P	1
9.93x8.15x3.98	PJHSC1084	4	PL108P	1
11.92x10.15x5.98	PJHSC12106	5	PL1210P	2
13.94x12.16x5.98	PJHSC14126	7	PL1412P	3

NON-METALLIC: POLYCARBONATE TYPE 4X HINGED QUICK RELEASE LATCH

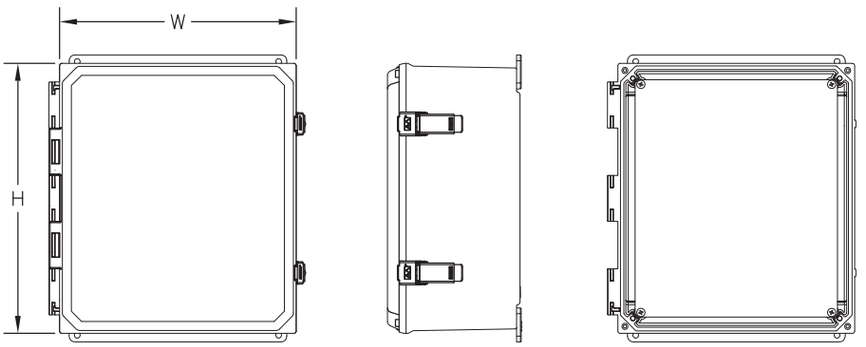

FRONT VIEW WITH LID REMOVED

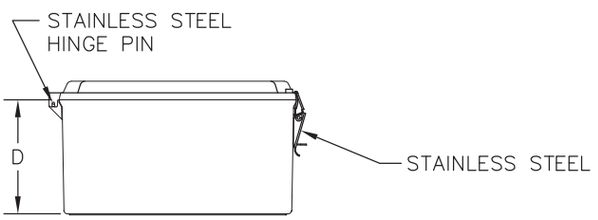

C UL US LISTED

CONSTRUCTION:
- NONMETALLIC SNAP LATCHES FEATURE PADLOCK HASP
- GASKET MATERIAL MADE OF CLOSED-CELL NEOPRENE CORD
- 10 - 32 THREADED INSERTS ARE INSTALLED FOR OPTIONAL BACK PANEL
- UV STABILIZED MATERIAL FOR OUTDOOR USE
- INJECTION MOLDED POLYCARBONATE THERMOPLASTIC OPAQUE COVER, ENCLOSURE BASE, FEET, AND FLANGES
- OPAQUE COVER, BASE, FEET, AND FLANGES – LIGHT GRAY COLOR (RAL 7035)

TYPE 4X

NON-METALLIC TYPE 4X HINGED QUICK RELEASE BOXES			GALVANIZED PANEL	
Enclosure Size HxWxD	Catalog Number	Weight	Catalog Number	Weight
5.93x6.16x3.98	PQR664	2	PL66P	1
7.94x6.16x3.98	PQR864	3	PL86P	1
9.93x8.15x3.98	PQR1084	4	PL108P	1
11.92x10.15x5.98	PQR12106	5	PL1210P	2
13.94x12.16x5.98	PQR14126	7	PL1412P	3

CONSTRUCTION:
- RUGGED, MOLDED FIBERGLASS REINFORCED POLYESTER CONSTRUCTION WITH REINFORCED CORNERS
- AVAILABLE WITH EITHER 30.5MM OR 22.5MM HOLES
- CAPTIVE STAINLESS STEEL COVER SCREWS
- "TONGUE AND GROOVE" TYPE CLOSED-CELL NEOPRENE GASKET
- UV STABILIZED MATERIAL FOR OUTDOOR USE

NON-METALLIC TYPE 4X PUSH BUTTON ENCLOSURES

Enclosure Size HxWxD	Catalog Number	Weight
6.74x3.93x3.88	N1PB	2
6.74x3.93x3.88	N2PB	2
8.99x3.93x3.88	N3PB	2

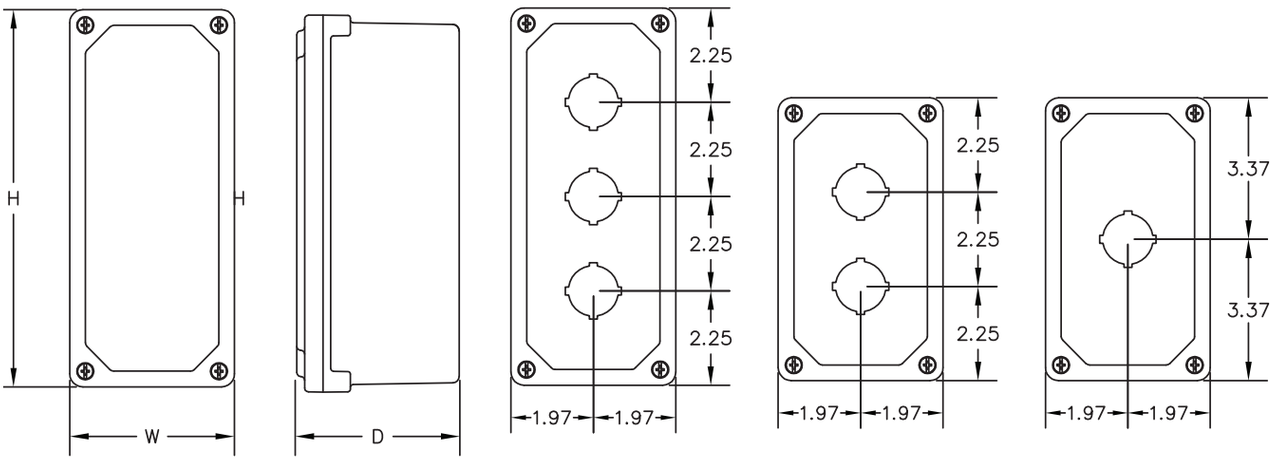

N3PB N2PB N1PB

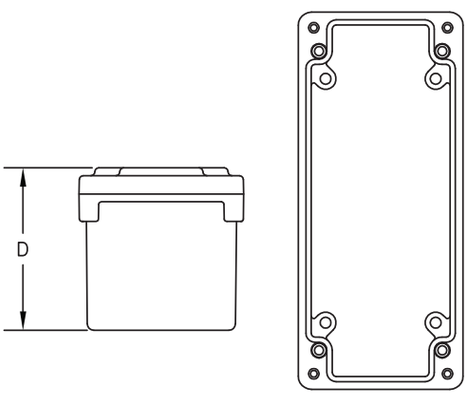

TOP VIEW WITH COVER REMOVED

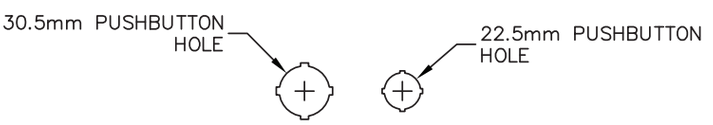

NOTE: For Miniature Push Button, replace **"PB"** suffix with **"PBM"**

TYPE 4X

NON-METALLIC: FIBERGLASS TYPE 4X SCREW COVER BOXES

CONSTRUCTION:
- STRONG MOLDED FIBERGLASS REINFORCED POLYESTER CONSTRUCTION WITH MATCHING COVER
- CAPTIVE STAINLESS STEEL COVER SCREWS
- GASKET MATERIAL MADE OF CLOSED-CELL NEOPRENE CORD
- STAINLESS STEEL WALL MOUNTING HARDWARE WITH 10-32 STAINLESS STEEL SCREWS INCLUDED
- 10-32 THREADED INSERTS ARE INSTALLED FOR OPTIONAL BACK PANEL OR TERMINAL KITS
- FIBERGLASS MATERIAL IS EASILY PUNCHED, DRILLED, OR SAWED
- UV STABILIZED MATERIAL FOR OUTDOOR USE

NON-METALLIC TYPE 4X SCREW COVER BOXES			GALVANIZED PANEL	
Enclosure Size HxWxD	Catalog Number	Weight	Catalog Number	Weight
6.10x6.10x4.18	NJSC664	4	NA66P	1
8.00x6.13x4.13	NJSC864	4	NA86P	1
10.14x8.26x6.13	NJSC1086	6	NA108P	1
12.14x10.26x6.13	NJSC12106	8	NA1210P	2
14.13x12.25x6.13	NJSC14126	12	NA1412P	3

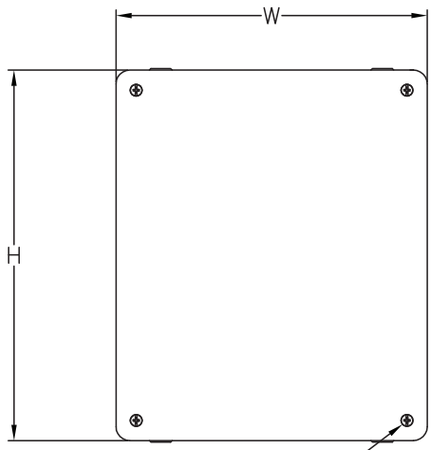

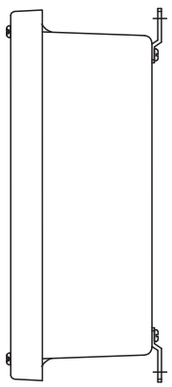

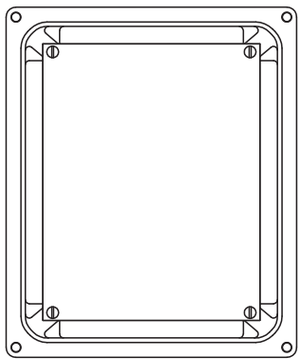

FRONT VIEW WITH LID REMOVED

(4) EACH #10–32 BRASS INSERTS AND STAINLESS STEEL CAPTIVE COVER SCREWS

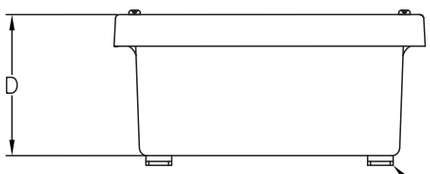

(4) STAINLESS STEEL MOUNTING FEET

TYPE 4X

NON-METALLIC: FIBERGLASS TYPE 4X HINGED SCREW COVER BOXES

CONSTRUCTION:
- STRONG MOLDED FIBERGLASS REINFORCED POLYESTER CONSTRUCTION WITH MATCHING COVER
- CAPTIVE STAINLESS STEEL COVER SCREWS
- CONTINUOUS STAINLESS STEEL HINGE
- GASKET MATERIAL MADE OF CLOSED-CELL NEOPRENE CORD
- STAINLESS STEEL WALL MOUNTING HARDWARE WITH 10-32 STAINLESS STEEL SCREWS INCLUDED
- 10-32 THREADED INSERTS ARE INSTALLED FOR OPTIONAL BACK PANEL OR TERMINAL KITS
- FIBERGLASS MATERIAL IS EASILY PUNCHED, DRILLED, OR SAWED
- UV STABILIZED MATERIAL FOR OUTDOOR USE

NON-METALLIC TYPE 4X HINGED SCREW COVER BOXES			GALVANIZED PANEL	
Enclosure Size HxWxD	Catalog Number	Weight	Catalog Number	Weight
6.10x6.10x4.18	NJHSC664	4	NA66P	1
8.00x6.13x4.13	NJHSC864	4	NA86P	1
10.14x8.26x6.13	NJHSC1086	6	NA108P	1
12.14x10.26x6.13	NJHSC12106	8	NA1210P	2
14.13x12.25x6.13	NJHSC14126	12	NA1412P	3

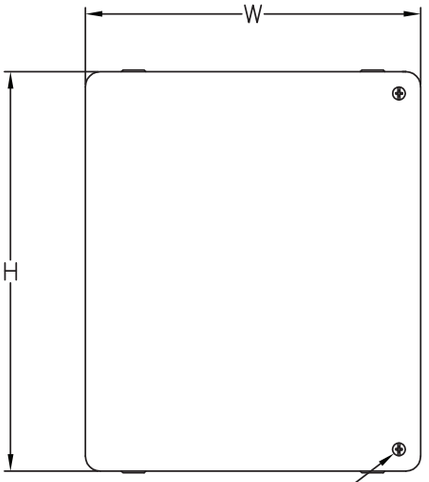

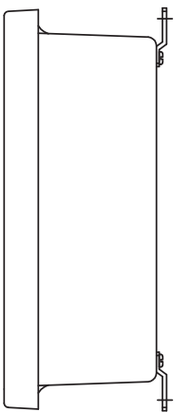

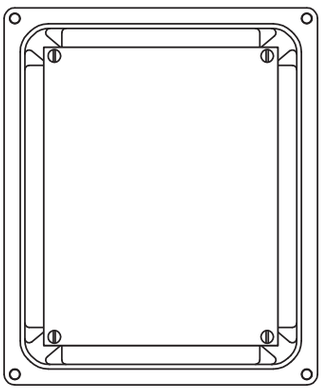

FRONT VIEW WITH LID REMOVED

(2) EACH #10–32 BRASS INSERTS AND STAINLESS STEEL CAPTIVE COVER SCREWS

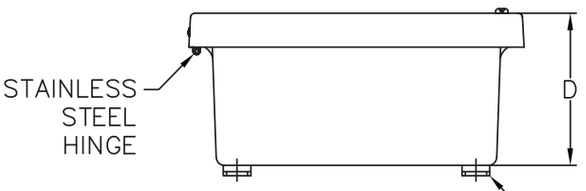

STAINLESS STEEL HINGE

(4) STAINLESS STEEL MOUNTING FEET

TYPE 4X

SMALL NON-METALLIC: FIBERGLASS TYPE 4X HINGED WITH TWIST LATCH

CONSTRUCTION:

- STRONG MOLDED FIBERGLASS REINFORCED POLYESTER CONSTRUCTION WITH MATCHING RAISED COVER FOR ADDITIONAL DEPTH
- STAINLESS STEEL TWIST LATCHES FEATURE PADLOCK HASP
- CONTINUOUS STAINLESS STEEL HINGE
- GASKET MATERIAL MADE OF CLOSED-CELL NEOPRENE CORD
- STAINLESS STEEL WALL MOUNTING HARDWARE WITH 10-32 STAINLESS STEEL SCREWS INCLUDED
- 10-32 THREADED INSERTS ARE INSTALLED FOR OPTIONAL BACK PANEL OR TERMINAL KITS
- FIBERGLASS MATERIAL IS EASILY PUNCHED, DRILLED, OR SAWED
- UV STABILIZED MATERIAL FOR OUTDOOR USE

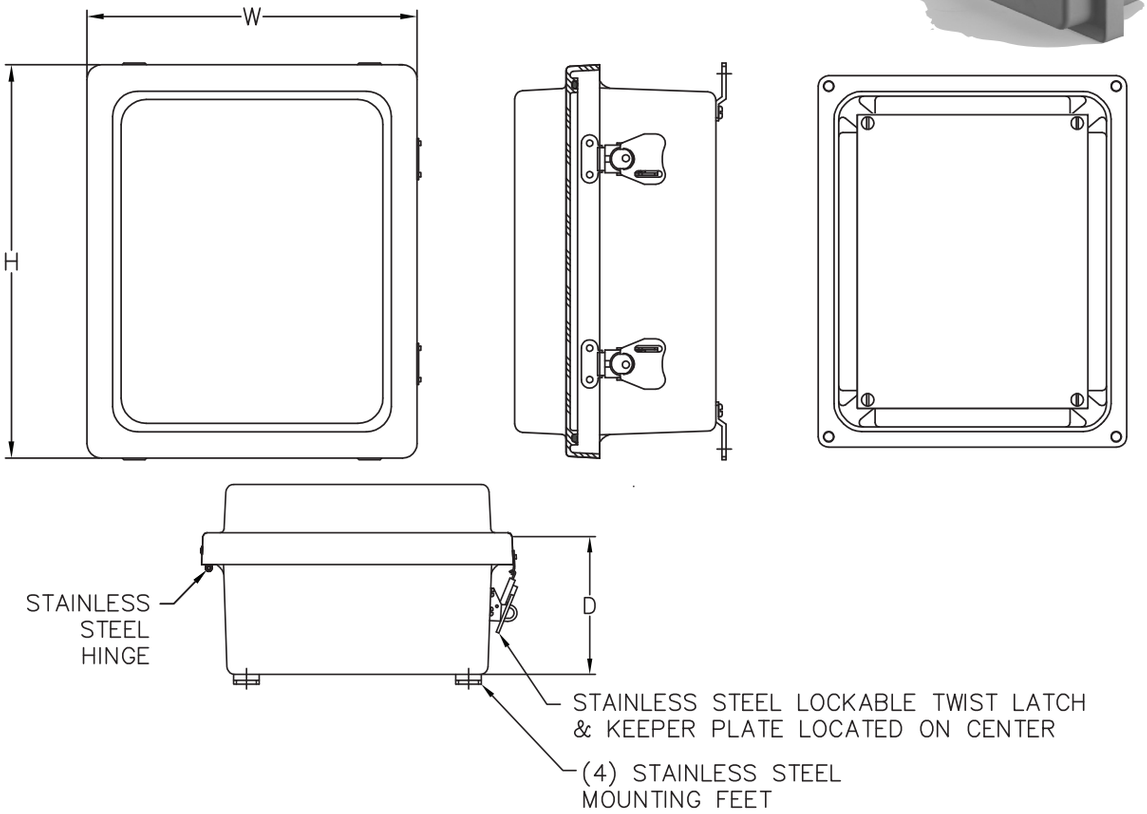

NON-METALLIC TYPE 4X HINGED WITH TWIST LATCH			GALVANIZED PANEL	
Enclosure Size HxWxD	Catalog Number	Weight	Catalog Number	Weight
6.10x6.10x4.18	NQR664	6	NA66P	1
8.00x6.13x4.13	NQR864	6	NA86P	1
10.14x8.26x6.13	NQR1086	7	NA108P	1
12.14x10.26x6.13	NQR12106	9	NA1210P	2
14.13x12.25x6.13	NQR14126	12	NA1412P	3
16.28x14.40x8.13	NQR16148	14	NA1614P	5
18.40x16.40x8.13	NQR18168	18	NA1816P	8
20.00x16.00x8.13	NQR20168	19	NA2016P	9
24.00x20.00x8.13	NQR24208	25	NA2420P	13
24.00x20.00x10.13	NQR242010	30	NA2420P	13
24.00x24.00x8.13	NQR24248	35	NA2424P	15
30.00x24.00x8.13	NQR30248	50	NA3024P	19
24.00x24.00x10.13	NQR242410	40	NA2424P	13
30.00x24.00x10.13	NQR302410	55	NA3024P	19

LARGE NON-METALLIC: FIBERGLASS TYPE 4X HINGED ENCLOSURES WITH TWIST LATCH

CONSTRUCTION:

- STRONG MOLDED FIBERGLASS REINFORCED POLYESTER CONSTRUCTION WITH MATCHING RAISED COVER FOR ADDITIONAL DEPTH
- STAINLESS STEEL TWIST LATCHES FEATURE PADLOCK HASP
- CONTINUOUS STAINLESS STEEL HINGE
- GASKET MATERIAL MADE OF CLOSED-CELL NEOPRENE CORD
- STAINLESS STEEL WALL MOUNTING HARDWARE WITH 10-32 STAINLESS STEEL SCREWS INCLUDED
- 10-32 THREADED INSERTS ARE INSTALLED FOR OPTIONAL BACK PANEL OR TERMINAL KITS
- FIBERGLASS MATERIAL IS EASILY PUNCHED, DRILLED, OR SAWED
- UV STABILIZED MATERIAL FOR OUTDOOR USE

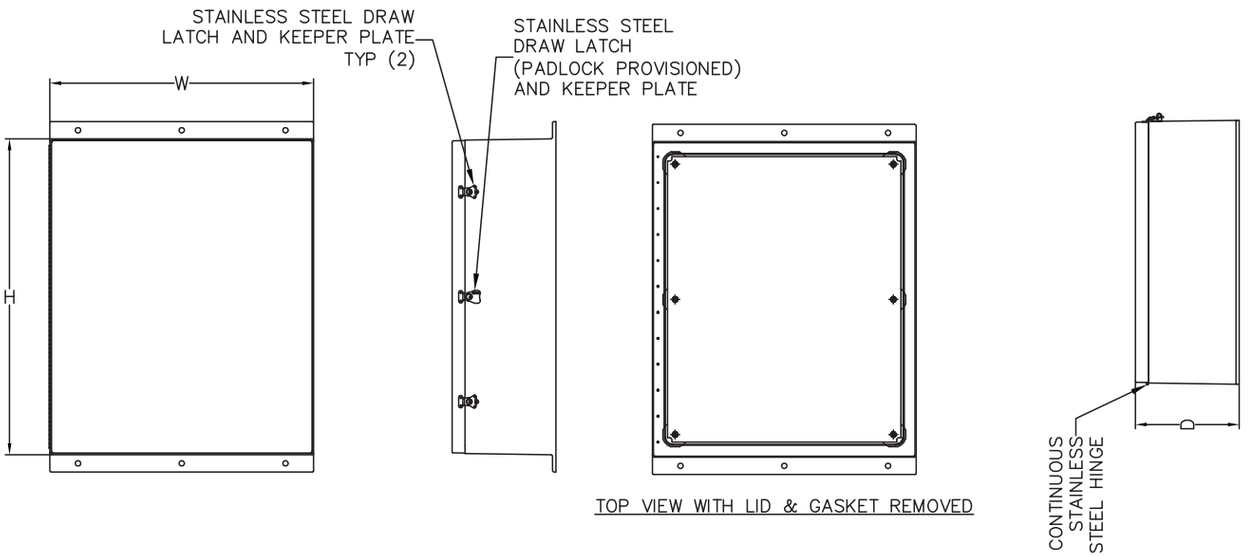

NON-METALLIC TYPE 4X HINGED WITH TWIST LATCH			GALVANIZED PANEL	
Enclosure Size HxWxD	Catalog Number	Weight	Catalog Number	Weight
36.25X30.25X12	NQR363012	59	NA3630P	30
36.25X30.25X16	NQR363016	64	NA3630P	30
36.25X36.25X12	NQR363612	72	NA3636P	37
36.25X36.25X16	NQR363616	77	NA3636P	37
48.25X36.25X12	NQR483612	83	NA4836P	49
48.25X36.25X16	NQR483616	91	NA4836P	49
60.25X36.25X12	NQR603612	101	NA6036P	61
60.25X36.25X16	NQR603616	122	NA6036P	61

SINGLE AND DOUBLE DOOR

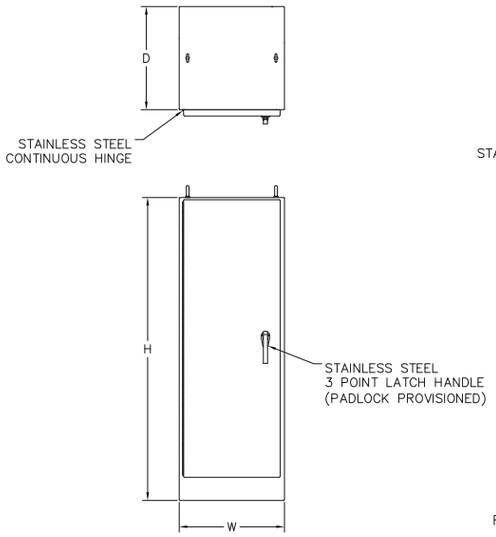

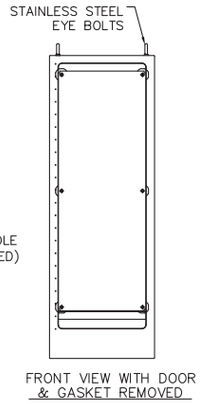

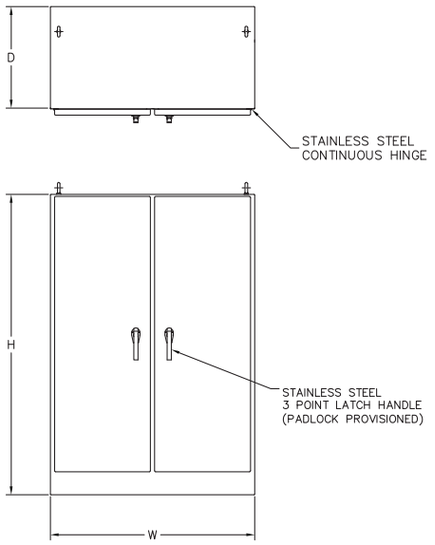

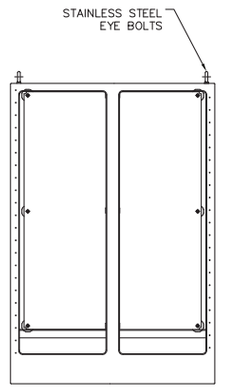

TYPE 4X

c UL us LISTED

CONSTRUCTION:

- DURABLE, CORROSION RESISTANT FIBERGLASS CONSTRUCTION
- SOFT, SELF-GRIPPING GASKET COMPRESSES OVER FLANGE FOR TIGHT SEAL AND HAS ONE 3 POINT LATCHING
- HANDLE WITH PADLOCKING PROVISION
- HEAVY-DUTY CONTINUOUS 304 STAINLESS STEEL HINGE
- FIBERGLASS MATERIAL HAS UV INHIBITORS WHICH PROVIDE IDEAL PROTECTION FROM OUTDOOR WEATHERING
- HEAVY-DUTY LIFTING EYES
- MOLDED-IN DRIP SHIELD
- FIBERGLASS MOUNTING STRUT INSTALLED ON SIDE AND BACK WALL

NON-METALLIC TYPE 4X HINGED FREESTANDING SINGLE AND DOUBLE DOOR			STEEL PANEL (WHITE)	
Enclosure Size HxWxD	Catalog Number	Weight	Catalog Number	Weight
72.00X25.00X24.50	NF722525	215	NA7225P	45
72.00X49.00X24.50	NDF724925	430	NA7249P	90

SMALL TYPE 12 & 4 JIC BOXES WITH CONTINUOUS HINGE - LESS PANEL

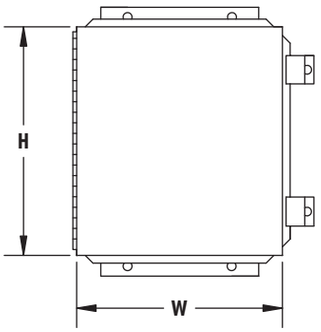

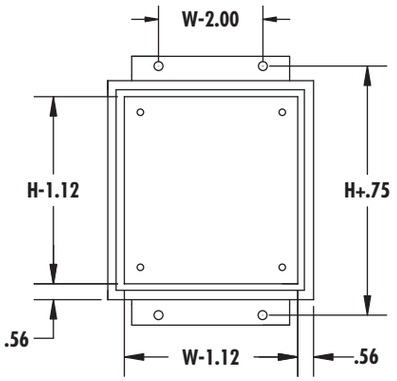

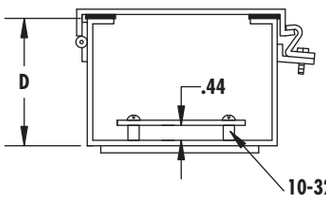

10-32 X 7/16
STANDOFF STUD

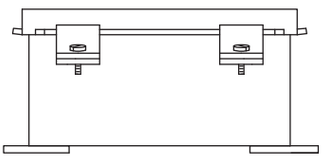

c UL us LISTED

CONSTRUCTION:
- CODE GAUGE PAINT GRIP GALVANIZED STEEL
- SEAMS CONTINUOUSLY WELDED AND GROUND SMOOTH
- SCREW CLAMPS ARE QUICK AND EASY TO OPERATE
- CONTINUOUS HINGE
- OIL RESISTANT GASKET
- OPTIONAL PANEL

FINISH:
- ANSI 61 GRAY POLYESTER POWDER COATING INSIDE AND OUT

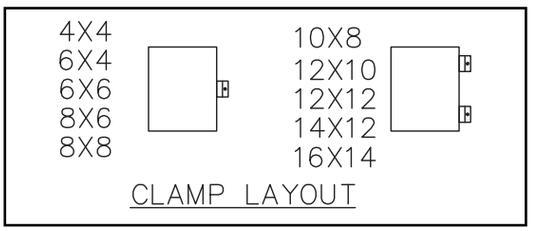

JIC BOXES TYPE 12 - CONTINUOUS HINGE			STEEL PANEL (WHITE)	
Enclosure Size HxWxD	Catalog Number	Weight	Catalog Number	Weight
* 4x4x3	JH443N412	2	N/A	N/A
6x4x3	JH643N412	3	64PJ	3
4x4x4	JH444N412	2	N/A	N/A
6x4x4	JH644N412	3	64PJ	3
6x6x4	JH664N412	4	66PJ	4
8x6x4	JH864N412	6	86PJ	6
8x8x4	JH884N412	7	88PJ	7
10x8x4	JH1084N412	8	108PJ	8
12x6x4	JH1264N412	8	126PJ	8
12x10x5	JH12105N412	12	1210PJ	12
10x8x6	JH1086N412	10	108PJ	10
10x10x6	JH10106N412	11	1010PJ	11
12x12x6	JH12126N412	15	1212PJ	15
14x12x6	JH14126N412	17	1412PJ	17
16x14x6	JH16146N412	20	1614PJ	20
12x10x8	JH12108N412	15	1210PJ	15
14x12x8	JH14128N412	19	1412PJ	19
16x14x8	JH16148N412	23	1614PJ	23
16x14x10	JH161410N412	26	1614PJ	26

NOTE: *Size not available with panel
NOTE: FOR QUICK RELEASE LATCH SEE ACCESSORIES SECTION

LARGE TYPE 12 JIC BOXES WITH CONTINUOUS HINGE - LESS PANEL

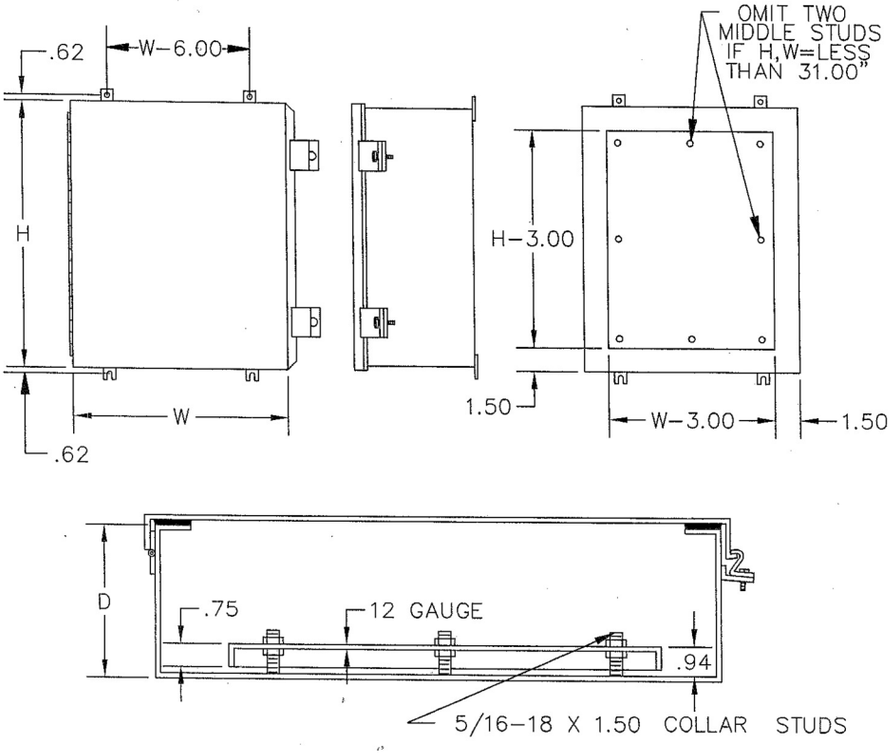

c UL us LISTED

CONSTRUCTION:
- CODE GAUGE PAINT GRIP GALVANIZED STEEL
- SEAMS CONTINUOUSLY WELDED AND GROUND SMOOTH
- SCREW CLAMPS ARE QUICK AND EASY TO OPERATE
- OIL RESISTANT GASKET
- STUDS PROVIDED FOR MOUNTING OPTIONAL PANEL

FINISH:
- ANSI 61 GRAY POLYESTER POWDER COATING INSIDE AND OUT

LARGE JIC BOXES TYPE 12			STEEL PANEL (WHITE)	
Enclosure Size HxWxD	Catalog Number	Weight	Catalog Number	Weight
20x16x7	JH20167N12	31	2016P	9
20x20x7	JH20207N12	37	2020P	10
24x20x7	JH24207N12	43	2420P	13
24x24x7	JH24247N12	48	2424P	15
30x20x7	JH30207N12	50	3020P	16
30x24x7	JH30247N12	58	3024P	19
36x24x7	JH36247N12	69	3624P	24
20x16x9	JH20169N12	36	2016P	9
20x20x9	JH20209N12	41	2020P	10
24x20x9	JH24209N12	47	2420P	13
24x24x9	JH24249N12	54	2424P	15
30x20x9	JH30209N12	55	3020P	16
30x24x9	JH30249N12	62	3024P	19
36x24x9	JH36249N12	76	3624P	24
36x30x9	JH36309N12	90	3630P	30
42x30x9	JH42309N12	103	4230P	35
42x36x9	JH42369N12	115	4236P	43
24x24x11	JH242411N12	58	2424P	15
36x24x11	JH362411N12	77	3624P	24
48x36x11	JH483611N12	139	4836P	49
30x24x13	JH302413N12	70	3024P	19
36x30x13	JH363013N12	100	3630P	30

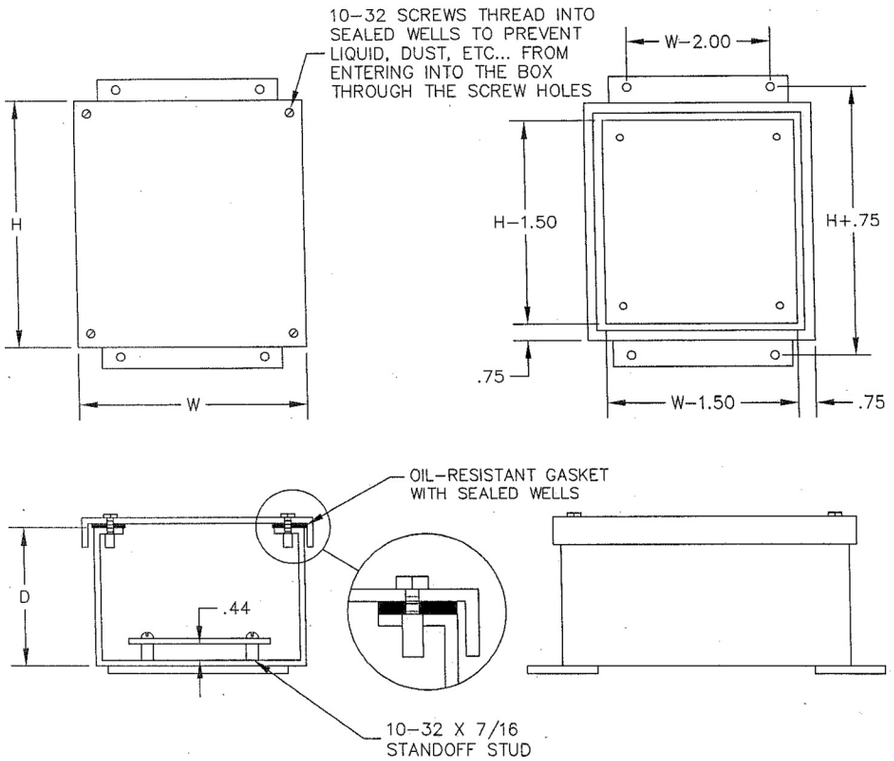

CONSTRUCTION:
- CODE GAUGE PAINT GRIP GALVANIZED STEEL
- SEAMS CONTINUOUSLY WELDED AND GROUND SMOOTH
- OIL RESISTANT GASKET
- OPTIONAL PANEL

FINISH:
- ANSI 61 GRAY POLYESTER POWDER COATING INSIDE AND OUT

SCREW COVER TYPE 12 JIC BOXES			STEEL PANEL (WHITE)	
Enclosure Size HxWxD	Catalog Number	Weight	Catalog Number	Weight
4x4x3	JSC443	2	N/A	N/A
4x4x4	JSC444	2	N/A	N/A
6x4x3	JSC643	3	64PJ	1
6x4x4	JSC644	3	64PJ	1
6x6x4	JSC664	4	66PJ	1
8x6x4	JSC864	5	86PJ	1
8x6x6	JSC866	7	86PJ	1
8x8x4	JSC884	7	88PJ	1
10x8x4	JSC1084	8	108PJ	1
10x8x6	JSC1086	10	108PJ	1
10x10x4	JSC10104	9	1010PJ	2
10x10x6	JSC10106	11	1010PJ	2
12x10x5	JSC12105	11	1210PJ	2
12x12x6	JSC12126	15	1212PJ	3
14x12x6	JSC14126	16	1412PJ	3
16x14x6	JSC16146	20	1614PJ	5

SINGLE DOOR TYPE 12 ENCLOSURES - LESS PANEL

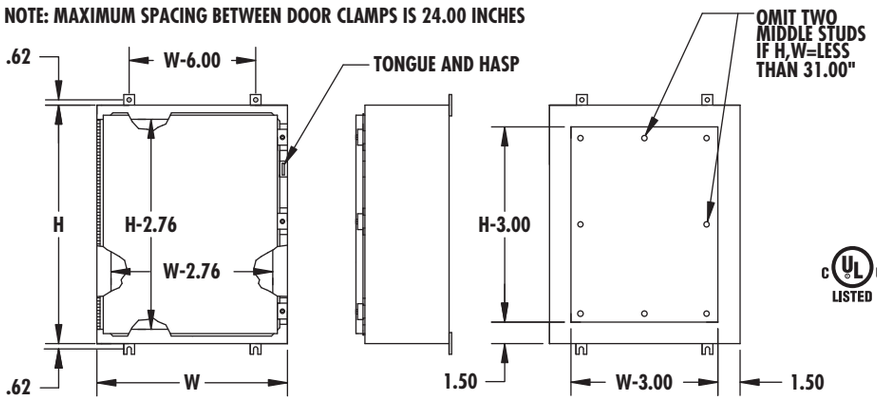

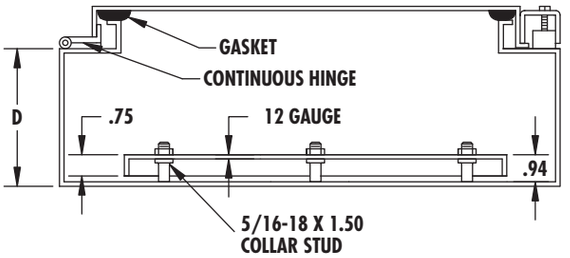

c UL us LISTED

CONSTRUCTION:
- CODE GAUGE PAINT GRIP GALVANIZED STEEL
- SEAMS CONTINUOUSLY WELDED AND GROUND SMOOTH
- DOOR CLAMPS ARE QUICK AND EASY TO OPERATE
- HEAVY GAUGE CONTINUOUS HINGE
- TONGUE AND HASP FOR PAD LOCKING
- OIL RESISTANT GASKET
- STUDS PROVIDED FOR MOUNTING OPTIONAL PANEL

FINISH:
- ANSI 61 GRAY POLYESTER POWDER COATING INSIDE AND OUT

SINGLE DOOR TYPE 12				STEEL PANEL (WHITE)	
Enclosure Size HxWxD	Catalog Number	Weight	Number of Clamps	Catalog Number	Weight
16x12x6	16126N12	22	2	1612P	4
16x16x6	16166N12	27	2	1616P	6
16x20x6	16206N12	31	2	1620P	9
20x12x6	20126N12	22	2	2012P	5
20x16x6	20166N12	31	2	2016P	9
20x20x6	20206N12	36	2	2020P	10
24x12x6	24126N12	30	2	2412P	7
24x16x6	24166N12	37	2	2416P	9
24x20x6	24206N12	42	2	2420P	13
24x24x6	24246N12	48	2	2424P	15
30x20x6	30206N12	51	2	3020P	16
30x24x6	30246N12	58	2	3024P	19
36x24x6	36246N12	69	3	3624P	24
36x30x6	36306N12	84	3	3630P	30

NOTE: FOR QUICK RELEASE LATCH SEE ACCESSORIES SECTION

FOR LARGE QUANTITIES CALL FACTORY

Continue on next Page

SINGLE DOOR TYPE 12				STEEL PANEL (WHITE)	
Enclosure Size HxWxD	Catalog Number	Weight	Number of Clamps	Catalog Number	Weight
16x12x8	16128N12	24	2	1612P	4
16x16x8	16168N12	31	2	1616P	6
20x16x8	20168N12	34	2	2016P	9
20x20x8	20208N12	40	2	2020P	10
24x12x8	24128N12	27	2	2412P	7
24x16x8	24168N12	40	2	2416P	9
24x20x8	24208N12	46	2	2420P	13
24x24x8	24248N12	52	2	2424P	15
30x20x8	30208N12	55	2	3020P	16
30x24x8	30248N12	63	2	3024P	19
30x30x8	30308N12	75	2	3030P	19
36x24x8	36248N12	72	2	3624P	24
36x30x8	36308N12	90	3	3630P	30
36x36x8	36368N12	102	3	3636P	37
42x24x8	42248N12	76	3	4224P	25
42x30x8	42308N12	101	3	4230P	35
42x36x8	42368N12	119	3	4236P	43
48x30x8	48308N12	113	3	4830P	40
48x36x8	48368N12	113	3	4836P	49
60x36x8	60368N12	160	3	6036P	61
16x12x10	161210N12	25	2	1612P	4
20x16x10	201610N12	38	2	2016P	9
20x20x10	202010N12	44	2	2020P	10
24x20x10	242010N12	50	2	2420P	13
24x24x10	242410N12	56	2	2424P	15
30x24x10	302410N12	68	2	3024P	19
36x24x10	362410N12	78	3	3624P	24
36x30x10	363010N12	96	3	3630P	30
42x30x10	423010N12	108	3	4230P	35
42x36x10	423610N12	126	3	4236P	43
48x30x10	483010N12	120	3	4830P	40
48x36x10	483610N12	141	3	4836P	49
60x36x10	603610N12	169	3	6036P	61
20x16x12	201612N12	40	2	2016P	9
24x20x12	242012N12	54	2	2420P	13
24x24x12	242412N12	61	2	2424P	15
30x24x12	302412N12	73	2	3024P	19
30x30x12	303012N12	89	2	3030P	19
36x24x12	362412N12	83	3	3624P	24
36x30x12	363012N12	102	3	3630P	30
36x36x12	363612N12	117	3	3636P	37
42x30x12	423012N12	115	3	4230P	35
42x36x12	423612N12	132	3	4236P	43
48x36x12	483612N12	148	3	4836P	49
60x36x12	603612N12	178	3	6036P	61
72x36x12	723612N12	221	3	7236P	74
24x20x16	242016N12	60	2	2420P	13
30x24x16	302416N12	82	2	3024P	19
36x30x16	363016N12	106	3	3630P	30
48x36x16	483616N12	164	3	4836P	49
60x36x16	603616N12	196	3	6036P	61
36x30x20	363020N12	121	3	3630P	30
48x36x20	483620N12	172	3	4836P	49
60x36x20	603620N12	208	3	6036P	61

NOTE: FOR QUICK RELEASE LATCH SEE ACCESSORIES SECTION

FOR LARGE QUANTITIES CALL FACTORY

DOUBLE DOOR-WALL MOUNT-TYPE 12 ENCLOSURES - LESS PANEL

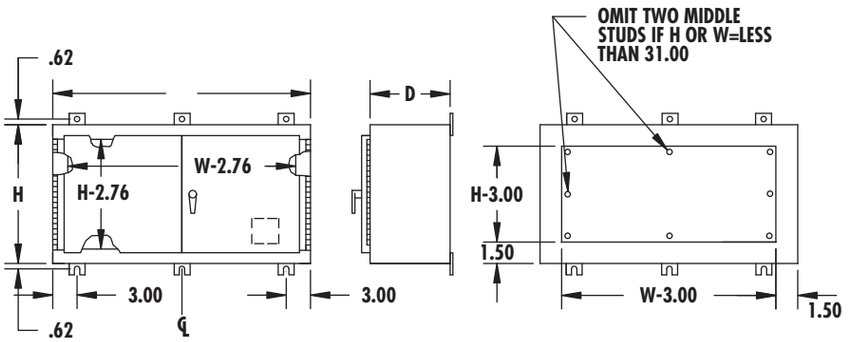

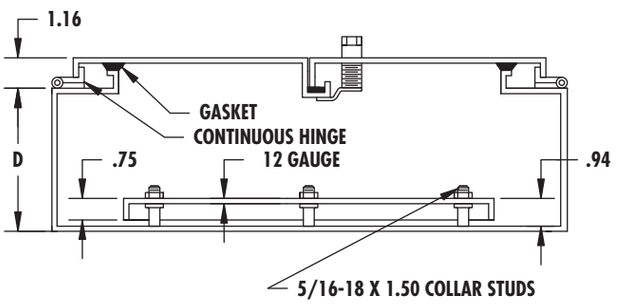

CONSTRUCTION:
- CODE GAUGE STEEL
- SEAMS CONTINUOUSLY WELDED AND GROUND SMOOTH
- GASKETED OVERLAPPING DOORS ELIMINATE NEED FOR CENTERPOST
- 3-POINT LATCHING MECHANISM OPERATED BY OIL-TIGHT KEY LOCKING L-HANDLE
- LATCH RODS HAVE ROLLERS FOR EASIER DOOR CLOSING
- HEAVY GAUGE CONTINUOUS HINGE
- REMOVABLE PRINT POCKET
- OIL RESISTANT DOOR GASKET
- STUDS PROVIDED FOR MOUNTING OPTIONAL PANEL

FINISH:
- ANSI 61 GRAY POLYESTER POWDER COATING INSIDE AND OUT

DOUBLE DOOR-WALL MOUNT-TYPE 12			STEEL PANEL (WHITE)	
Enclosure Size HxWxD	Catalog Number	Weight	Catalog Number	Weight
24x42x8	DW24428N12	89	DW2442P	28
24x48x8	DW24488N12	98	DW2448P	32
30x42x10	DW304210N12	117	DW3042P	35
30x48x10	DW304810N12	128	DW3048P	40
30x60x10	DW306010N12	152	DW3060P	51
36x42x12	DW364212N12	177	DW3642P	53
36x48x12	DW364812N12	193	DW3648P	49
36x60x12	DW366012N12	231	DW3660P	61
42x60x12	DW426012N12	260	DW4260P	89
48x48x12	DW484812N12	280	DW4848P	80

DOUBLE DOOR FLOOR MOUNT TYPE 12 ENCLOSURES - LESS PANEL

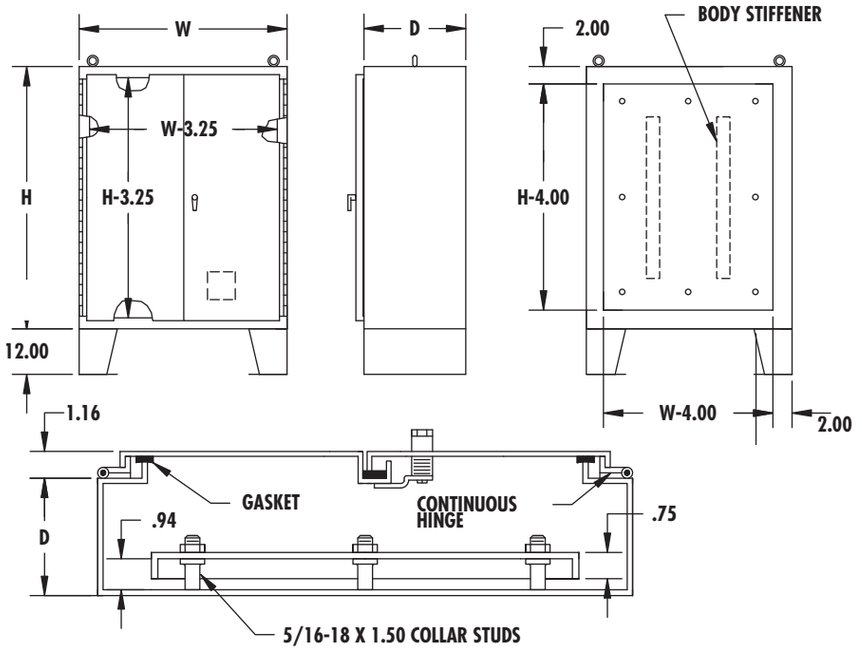

c UL us LISTED

CONSTRUCTION:
- 12 GAUGE PAINT GRIP GALVANIZED STEEL
- SEAMS CONTINUOUSLY WELDED AND GROUND SMOOTH
- GASKETED OVERLAPPING DOORS ELIMINATE NEED FOR CENTERPOST
- 3-POINT LATCHING MECHANISM OPERATED BY OIL-TIGHT PADLOCKING L-HANDLE
- LATCH RODS HAVE ROLLERS FOR EASIER DOOR CLOSING
- HEAVY GAUGE CONTINUOUS HINGE
- PRINT POCKET PROVIDED ON DOOR WITH 3-POINT LATCH
- 12 INCH FLOOR STANDS ARE WELDED TO ENCLOSURE
- HEAVY-DUTY LIFTING EYES
- OIL-RESISTANT GASKET
- STUDS PROVIDED FOR MOUNTING OPTIONAL PANEL

FINISH:
- ANSI 61 GRAY POLYESTER POWDER COATING INSIDE AND OUT

DOUBLE DOOR FLOOR MOUNT TYPE 12			STEEL PANEL (WHITE)	
Enclosure Size HxWxD	Catalog Number	Weight	Catalog Number	Weight
54x42x8	D54428N12	210	D5442P	62
60x48x8	D60488N12	319	D6048P	103
60x48x10	D604810N12	330	D6048P	103
60x60x10	D606010N12	390	D6060P	130
72x60x10	D726010N12	450	D7260P	158
72x72x10	D727210N12	525	D7272P	191
60x48x12	D604812N12	360	D6048P	103
60x60x12	D606012N12	400	D6060P	130
72x60x12	D726012N12	475	D7260P	158
72x72x12	D727212N12	560	D7272P	191
60x48x16	D604816N12	420	D6048P	103
60x60x16	D606016N12	520	D6060P	130
72x60x16	D726016N12	582	D7260P	158
72x72x16	D727216N12	630	D7272P	191
60x48x20	D604820N12	486	D6048P	103
72x60x20	D726020N12	577	D7260P	158
72x72x20	D727220N12	650	D7272P	191
60x48x24	D604824N12	500	D6048P	103
60x60x24	D606024N12	566	D6060P	130
72x60x24	D726024N12	614	D7260P	158
72x72x24	D727224N12	690	D7272P	191

FOR LARGE QUANTITIES CALL FACTORY

FREESTANDING-SINGLE DOOR-TYPE 12 ENCLOSURES - LESS PANEL

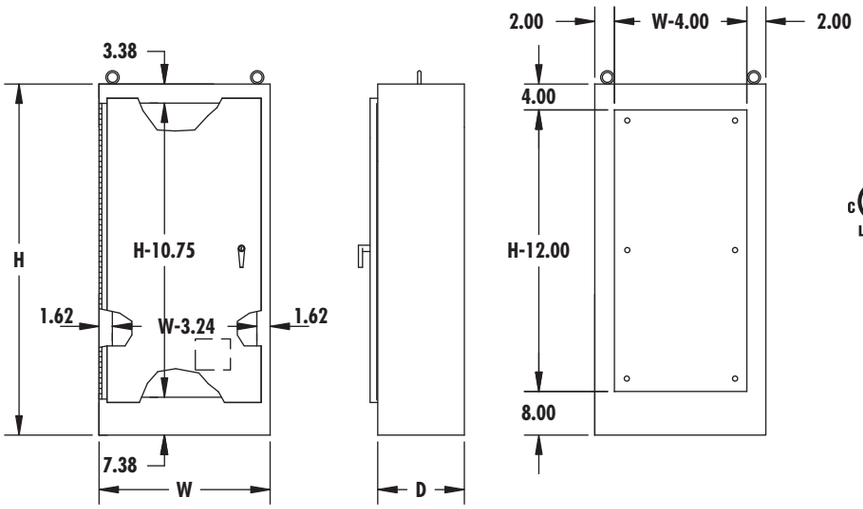

c UL us LISTED

CONSTRUCTION:
- 12 GAUGE STEEL
- SEAMS CONTINUOUSLY WELDED AND GROUND SMOOTH
- 3-POINT LATCHING OPERATED BY OIL-TIGHT PADLOCKING L-HANDLE
- LATCH RODS HAVE ROLLERS FOR EASIER DOOR CLOSING
- HEAVY GAUGE CONTINUOUS HINGE
- LIFTING EYES FOR EASY HANDLING
- REMOVABLE PRINT POCKET
- OIL RESISTANT DOOR GASKET
- UNI-STRUT PROVIDED FOR MOUNTING OPTIONAL PANEL

FINISH:
- ANSI 61 GRAY POLYESTER POWDER COATING INSIDE AND OUT

FREESTANDING-SINGLE DOOR-TYPE 12			STEEL PANEL (WHITE)	
Enclosure Size HxWxD	Catalog Number	Weight	Catalog Number	Weight
72x24x18	F722418N12	246	F7224P	65
72x30x18	F723018N12	285	F7230P	74
72x36x18	F723618N12	325	F7236P	98
90x36x20	F903620N12	406	F9036P	108
72x24x24	F722424N12	300	F7224P	65
72x30x24	F723024N12	335	F7230P	74
72x36x24	F723624N12	370	F7236P	98
90x36x24	F903624N12	440	F9036P	108
72x24x30	F722430N12	355	F7224P	65
72x36x30	F723630N12	420	F7236P	98
72x24x36	F722436N12	400	F7224P	65
72x36x36	F723636N12	465	F7236P	98
90x36x36	F903636N12	525	F9036P	108

FOR LARGE QUANTITIES CALL FACTORY

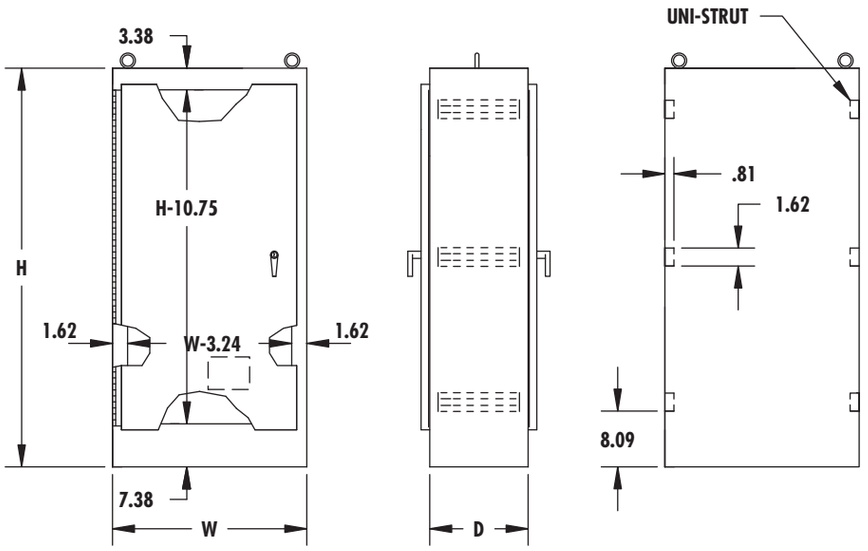

c UL us LISTED

CONSTRUCTION:
- 12 GAUGE STEEL
- SEAMS CONTINUOUSLY WELDED AND GROUND SMOOTH
- 3-POINT LATCHING OPERATED BY OIL-TIGHT KEYLOCKING/ PADLOCKING L-HANDLE
- LATCH RODS HAVE ROLLERS FOR EASIER DOOR CLOSING
- HEAVY GAUGE CONTINUOUS HINGE
- LIFTING EYES FOR EASY HANDLING
- REMOVABLE PRINT POCKET
- OIL RESISTANT DOOR GASKET
- UNI-STRUT PROVIDED FOR MOUNTING OPTIONAL PANEL

FINISH:
- ANSI 61 GRAY POLYESTER POWDER COATING INSIDE AND OUT

TYPE 12

FREESTANDING-SINGLE DOOR-DUAL ACCESS TYPE 12			STEEL PANEL (WHITE)	
Enclosure Size HxWxD	Catalog Number	Weight	Catalog Number	Weight
72x24x24	FDA722424N12	318	F7224P	65
72x30x24	FDA723024N12	362	F7230P	74
72x36x24	FDA723624N12	398	F7236P	98
90x36x24	FDA903624N12	456	F9036P	108
72x24x30	FDA722430N12	385	F7224P	65
72x24x36	FDA722436N12	401	F7224P	65
72x36x36	FDA723636N12	478	F7236P	98
90x36x36	FDA903636N12	563	F9036P	108

FOR LARGE QUANTITIES CALL FACTORY

FREESTANDING DOUBLE DOOR TYPE 12 ENCLOSURES - LESS PANEL

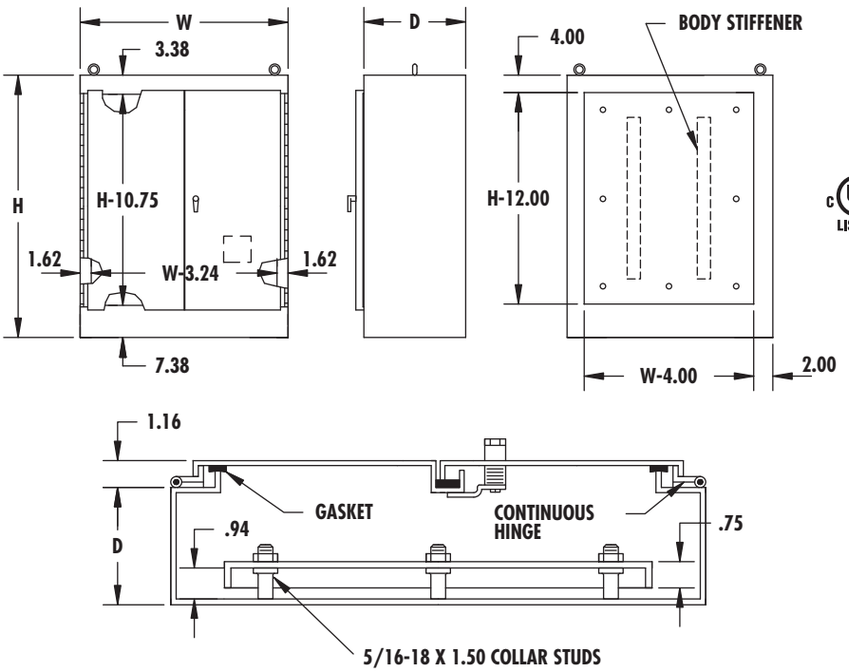

c UL us LISTED

CONSTRUCTION:
- 12 GAUGE STEEL
- SEAMS CONTINUOUSLY WELDED AND GROUND SMOOTH
- DRIP SHIELD
- GASKETED OVERLAPPING DOORS ELIMINATE NEED FOR CENTER POST
- 3-POINT LATCHING MECHANISM OPERATED BY OIL-TIGHT PADLOCKING L-HANDLE
- LATCH RODS HAVE ROLLERS FOR EASIER DOOR CLOSING
- HEAVY GAUGE CONTINUOUS HINGE
- HEAVY-DUTY LIFTING EYES
- REMOVABLE PRINT POCKET
- OIL RESISTANT GASKET
- UNI-STRUT PROVIDED FOR MOUNTING OPTIONAL PANEL

FINISH:
- ANSI 61 GRAY POLYESTER POWDER COATING INSIDE AND OUT

FREESTANDING DOUBLE DOOR-TYPE 12			STEEL PANEL (WHITE)	
Enclosure Size HxWxD	Catalog Number	Weight	Catalog Number	Weight
72x48x18	DF724818N12	500	DF7248P	131
72x60x18	DF726018N12	568	DF7260P	158
72x72x18	DF727218N12	645	DF7272P	187
90x72x20	DF907220N12	781	DF9072P	238
72x48x24	DF724824N12	530	DF7248P	131
72x60x24	DF726024N12	645	DF7260P	158
72x72x24	DF727224N12	695	DF7272P	187
90x72x24	DF907224N12	825	DF9072P	238
72x60x36	DF726036N12	750	DF7260P	158
90x72x36	DF907236N12	1000	DF9072P	238

FOR LARGE QUANTITIES CALL FACTORY

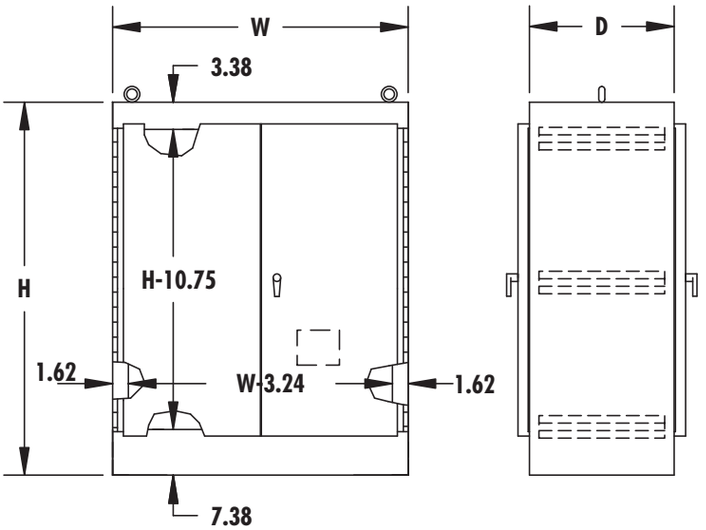

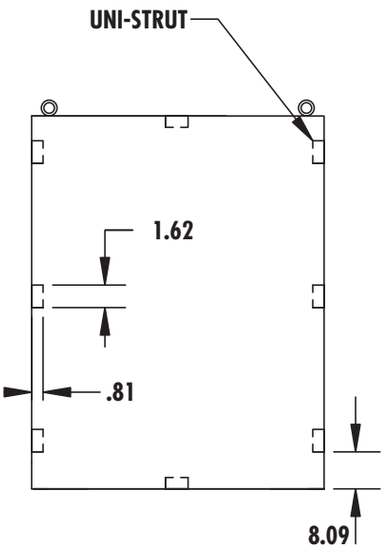

CONSTRUCTION:
- 12 GAUGE STEEL
- SEAMS CONTINUOUSLY WELDED AND GROUND SMOOTH
- GASKETED OVERLAPPING DOORS ELIMINATENEED FOR CENTER POST
- 3-POINT LATCHING MECHANISM OPERATED BY OIL-TIGHT KEYLOCKING/ PADLOCKING HANDLE
- LATCH RODS HAVE ROLLERS FOR EASIER DOOR CLOSING
- HEAVY GAUGE CONTINUOUS HINGE
- HEAVY-DUTY LIFTING EYES
- REMOVABLE PRINT POCKET
- OIL RESISTANT GASKET
- UNI-STRUT PROVIDED FOR MOUNTING OPTIONAL PANEL

FINISH:
- ANSI 61 GRAY POLYESTER POWDER COATING INSIDE AND OUT

TYPE 12

FREESTANDING-DOUBLE DOOR-DUAL ACCESS TYPE 12			STEEL PANEL (WHITE)	
Enclosure Size HxWxD	Catalog Number	Weight Number	Catalog	Weight
72x48x24	DFDA724824N12	497	DF7248P	131
72x60x24	DFDA726024N12	645	DF7260P	158
72x72x24	DFDA727224N12	744	DF7272P	187
90x72x24	DFDA907224N12	762	DF9072P	238
72x60x36	DFDA726036N12	750	DF7260P	158

Note: Non-stocking items made per order: Once order is placed in production it **cannot** be cancelled.

MULTI DOOR TYPE 12 ENCLOSURE WITH PANELS

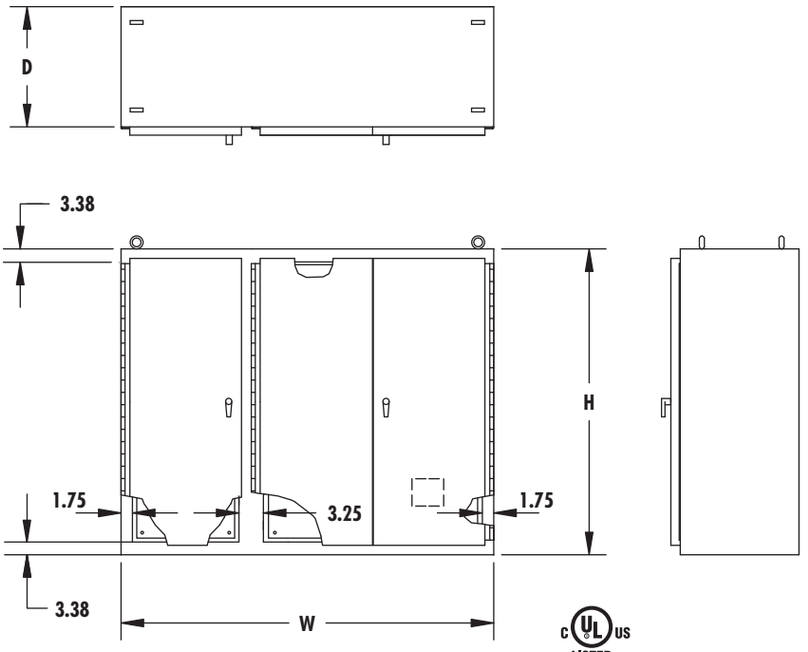

CONSTRUCTION:
- 11 GAUGE STEEL
- SEAMS CONTINUOUSLY WELDED AND GROUND SMOOTH
- BODY STIFFENERS WELDED TO ENCLOSURE BACKS MAINTAIN FLATNESS AND INCREASE RIGIDITY
- HEAVY DUTY LIFTING EYES
- AT TWO DOOR OPENINGS, GASKETED OVERLAPPING DOORS ELIMINATE NEED FOR CENTER POSTS
- 3-POINT LATCHING OPERATED BY KEYLOCKING/PADLOCKING HANDLE
- LATCH RODS HAVE ROLLERS FOR EASIER DOOR CLOSING
- HEAVY GAUGE CONTINUOUS HINGES SUPPORT EACH DOOR
- PANEL SUPPORTS
- REMOVABLE PRINT POCKETS
- OIL RESISTANT DOOR GASKET
- REMOVABLE 11 GAUGE STEEL PANELS

FINISH:
- ANSI 61 GRAY POLYESTER POWDER COATING INSIDE AND OUT OVER PAINT GRIP GALVANIZED STEEL

TYPE 12

Enclosure Size HxWxD	Catalog Number	Weight
86.13x112.00x14.13	D3-8611214N12	1850

Note: Non-stocking items made per order: Once order is placed in production it **cannot** be cancelled.

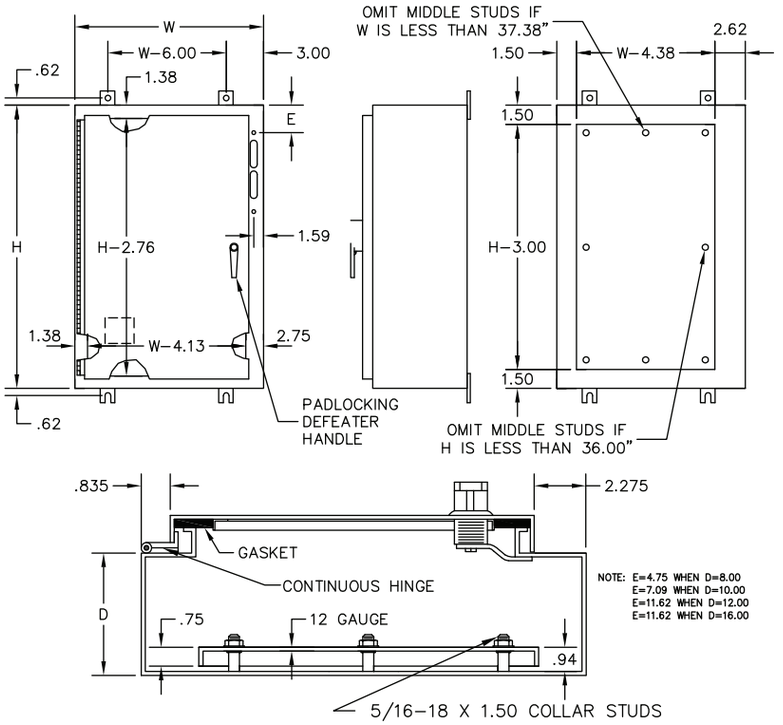

DESIGNED TO HOUSE THE FOLLOWING:

ALLEN-BRADLEY
- BULLETIN 1494V DISCONNECT SWITCHES WITH FLANGE-MOUNTED OPERATING MECHANISMS AND BULLETIN 1494V FLANGE-MOUNTED VARIABLE-DEPTH OPERATING MECHANISMS FOR CIRCUIT BREAKERS
- BULLETIN 140U FLEXIBLE CABLE OPERATING MECHANISMS FOR 140U MOLDED CASSE CIRCUIT BREAKERS
- BULLETIN 1494C CABLE-OPERATED DISCONNECT SWITCHES WITH FLANGE-MOUNTED HANDLES
- BULLETIN 194RC CABLE-OPERATED FLANGE-MOUNTED HANDLES FOR USE WITH THE NFPA 79 COMPLIANT 194R IEC ROTARY DISCONNECT SWITCHES

ABB CONTROLS
- FLANGE-MOUNTED VARIABLE-DEPTH OPERATING MECHANISMS FOR DISCONNECT SWITCHES AND CIRCUIT BREAKERS. ALSO THE CABLE VERSION FOR CIRCUIT BREAKERS.

EATON CUTLER-HAMMER
- TYPE C361 FLANGE-MOUNTED VARIABLE-DEPTH OPERATING MECHANISMS FOR DISCONNECT SWITCHES AND TYPE C371 FLANGE-MOUNTED VARIABLE-DEPTH OPERATING MECHANISMS FOR CIRCUIT BREAKERS

GENERAL ELECTRIC
- TYPE STDA FLANGE HANDLES AND VARIABLE-DEPTH OPERATING MECHANISMS FOR DISCONNECT SWITCHES AND CIRCUIT BREAKERS. ALSO SPECTRA FLEX™ CABLE OPERATORS FOR CIRCUIT BREAKERS

SIEMENS ITE
- MAX-FLEX™ FLANGE MOUNTED VARIABLE-DEPTH OPERATING HANDLES FOR CIRCUIT BREAKERS

SCHNEIDER SQUARE D®
- CLASS 9422 DISCONNECT SWITCHES WITH FLANGE-MOUNTED VARIABLE-DEPTH OPERATING MECHANISMS OR CABLE MECHANISMS AND CLASS 9422 FLANGE-MOUNTED VARIABLE-DEPTH OPERATING MECHANISMS FOR CIRCUIT BREAKERS.

TYPE 12 FLANGE MOUNTED DISCONNECT ENCLOSURE			STEEL PANEL (WHITE)	
Enclosure Size HxWxD	Catalog Number	Weight	Catalog Number	Weight
20x22x8	20228FDN123PT	42	2020P	10
24x22x8	24228FDN123PT	48	2420P	13
24x26x8	24268FDN123PT	54	2424P	15
30x22x8	30228FDN123PT	57	3020P	16
30x26x8	30268FDN123PT	65	3024P	19
36x26x8	36268FDN123PT	75	3624P	24
36x32x8	36328FDN123PT	93	3630P	30
42x32x8	42328FDN123PT	104	4230P	35
42x38x8	42388FDN123PT	122	4236P	43
48x38x8	48388FDN123PT	116	4836P	49
60x38x8	60388FDN123PT	165	6036P	61

TYPE 12 FLANGE MOUNTED DISCONNECT ENCLOSURES

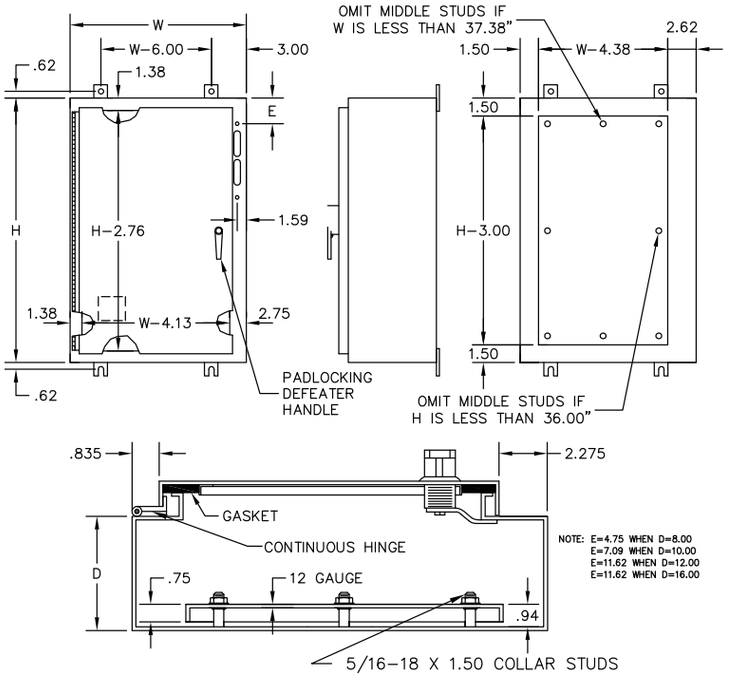

DESIGNED TO HOUSE THE FOLLOWING:

ALLEN-BRADLEY
- BULLETIN 1494V DISCONNECT SWITCHES WITH FLANGE-MOUNTED OPERATING MECHANISMS AND BULLETIN 1494V FLANGE-MOUNTED VARIABLE-DEPTH OPERATING MECHANISMS FOR CIRCUIT BREAKERS
- BULLETIN 140U FLEXIBLE CABLE OPERATING MECHANISMS FOR 140U MOLDED CASSE CIRCUIT BREAKERS
- BULLETIN 1494C CABLE-OPERATED DISCONNECT SWITCHES WITH FLANGE-MOUNTED HANDLES
- BULLETIN 194RC CABLE-OPERATED FLANGE-MOUNTED HANDLES FOR USE WITH THE NFPA 79 COMPLIANT 194R IEC ROTARY DISCONNECT SWITCHES

ABB CONTROLS
- FLANGE-MOUNTED VARIABLE-DEPTH OPERATING MECHANISMS FOR DISCONNECT SWITCHES AND CIRCUIT BREAKERS. ALSO THE CABLE VERSION FOR CIRCUIT BREAKERS.

EATON CUTLER-HAMMER
- TYPE C361 FLANGE-MOUNTED VARIABLE-DEPTH OPERATING MECHANISMS FOR DISCONNECT SWITCHES AND TYPE C371 FLANGE-MOUNTED VARIABLE-DEPTH OPERATING MECHANISMS FOR CIRCUIT BREAKERS

GENERAL ELECTRIC
- TYPE STDA FLANGE HANDLES AND VARIABLE-DEPTH OPERATING MECHANISMS FOR DISCONNECT SWITCHES AND CIRCUIT BREAKERS. ALSO SPECTRA FLEX™ CABLE OPERATORS FOR CIRCUIT BREAKERS

SIEMENS ITE
- MAX-FLEX™ FLANGE MOUNTED VARIABLE-DEPTH OPERATING HANDLES FOR CIRCUIT BREAKERS

SCHNEIDER SQUARE D®
- CLASS 9422 DISCONNECT SWITCHES WITH FLANGE-MOUNTED VARIABLE-DEPTH OPERATING MECHANISMS OR CABLE MECHANISMS AND CLASS 9422 FLANGE-MOUNTED VARIABLE-DEPTH OPERATING MECHANISMS FOR CIRCUIT BREAKERS.

TYPE 12 FLANGE MOUNTED DISCONNECT ENCLOSURE			STEEL PANEL (WHITE)	
Enclosure Size HxWxD	Catalog Number	Weight	Catalog Number	Weight
20x22x10	202210FDN123PT	46	2020P	10
24x22x10	242210FDN123PT	52	2420P	13
24x26x10	242610FDN123PT	58	2424P	15
30x22x10	302210FDN123PT	65	3020P	16
30x26x10	302610FDN123PT	70	3024P	19
36x26x10	362610FDN123PT	81	3624P	24
36x32x10	363210FDN123PT	99	3630P	30
42x32x10	423210FDN123PT	111	4230P	35
42x38x10	423810FDN123PT	129	4236P	43
48x38x10	483810FDN123PT	145	4836P	49
60x38x10	603810FDN123PT	174	6036P	61
30x26x12	302612FDN123PT	76	3024P	19
36x32x12	363212FDN123PT	105	3630P	30
42x32x12	423212FDN123PT	119	4230P	35
42x38x12	423812FDN123PT	136	4236P	43
48x38x12	483812FDN123PT	152	4836P	49
60x38x12	603812FDN123PT	183	6036P	61
36x32x16	363216FDN123PT	109	3630P	30
48x38x16	483816FDN123PT	168	4836P	49
60x38x16	603816FDN123PT	189	6036P	61

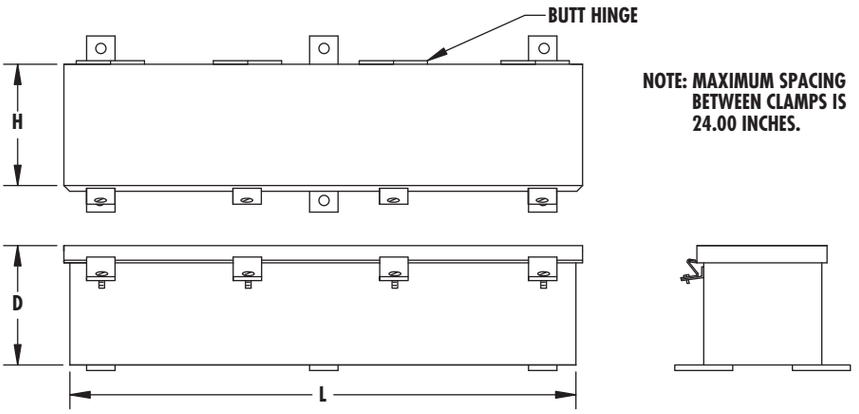

NOTE: MAXIMUM SPACING BETWEEN CLAMPS IS 24.00 INCHES.

CONSTRUCTION:
- CODE GAUGE PAINT GRIP GALVANIZED STEEL
- SEAMS CONTINUOUSLY WELDED AND GROUND SMOOTH
- BUTT HINGES
- SCREW CLAMPS ARE QUICK AND EASY TO OPERATE
- OIL RESISTANT GASKET

FINISH:
- ANSI 61 GRAY POLYESTER POWDER COATING INSIDE AND OUT

Trough Size HxDxL	Catalog Number	Weight
4x4x12	1-44JO	6
4x4x24	2-44JO	10
4x4x36	3-44JO	16
4x4x48	4-44JO	20
4x4x60	5-44JO	25
4x4x72	6-44JO	30
6x6x12	1-66JO	9
6x6x24	2-66JO	16
6x6x36	3-66JO	23
6x6x48	4-66JO	29
6x6x60	5-66JO	32
6x6x72	6-66JO	42
8x8x12	1-88JO	13
8x8x24	2-88JO	23
8x8x36	3-88JO	32
8x8x48	4-88JO	40
8x8x60	5-88JO	49
12x12x24	2-1212JO	34
12x12x36	3-1212JO	49
12x12x48	4-1212JO	60
12x12x60	5-1212JO	73

FOR LARGE QUANTITIES CALL FACTORY

TYPE 12 JIC PULL THRU WIREWAY

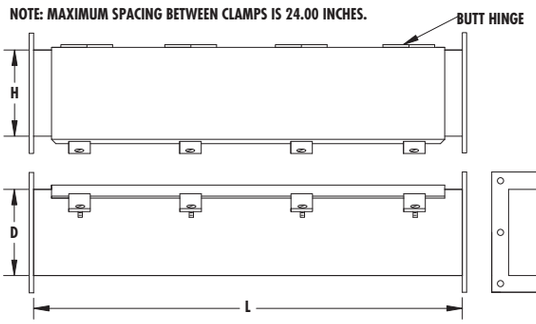

TYPE 12 PULL THROUGH WIREWAY

CONSTRUCTION:

- CODE GAUGE PAINT GRIP GALVANIZED STEEL
- 12 GAUGE STEEL END FLANGES
- SEAMS CONTINUOUSLY WELDED AND GROUND SMOOTH
- BUTT HINGES
- SCREW CLAMPS ARE QUICK AND EASY TO OPERATE
- OIL RESISTANT GASKET
- GASKET POSITIONED BETWEEN FLANGES WHEN SECTIONS AND FITTINGS ARE BOLTED TOGETHER

FINISH:

- ANSI 61 GRAY POLYESTER POWDER COATING INSIDE AND OUT

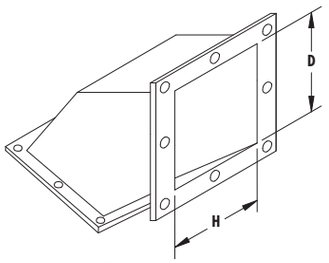

45 ELBOW

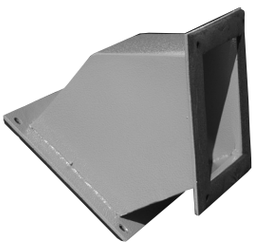

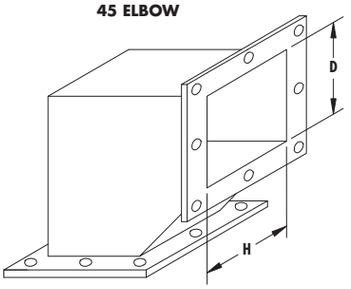

90 ELBOW

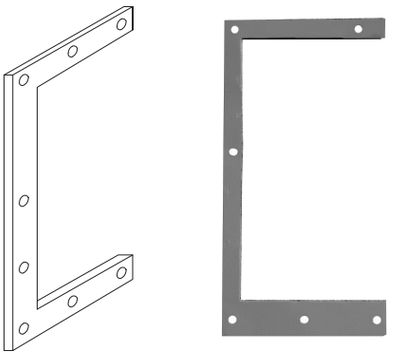

DROP HANGER

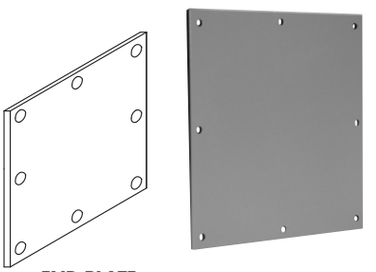

END PLATE

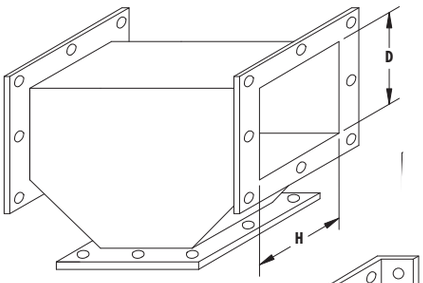

TEE

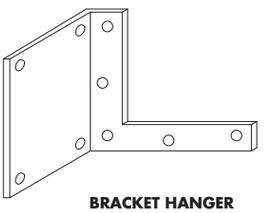

BRACKET HANGER

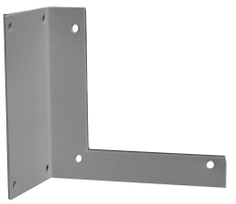

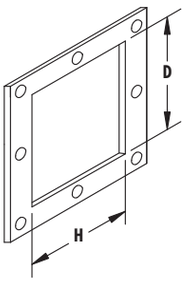

BOX CONNECTOR

Wireway Size HxDxL	Catalog Number	Weight
4x4x12	1-44P	6
4x4x24	2-44P	11
4x4x36	3-44P	16
4x4x48	4-44P	21
4x4x60	5-44P	25
4x4x120	10-44P	55

Continue on next Page

	Catalog Number	Weight
4′ FITTINGS		
90L	4-90P	5
45L	4-45P	4
Cross	4-CP	8
Tees	4-TPN12	6
End Plate	4-EPP	1
Cut-Off	4-CFP	6
1" Nipple	4-NIP	2
2" Nipple	4-N2P	2
3" Nipple	4-N3P	3
Box Connector	4-BCP	1
Reducer	4-RPN12	1
Drop Hanger	4-DHP	1
Bracket Hanger	4-BHP	1
WIREWAY SIZE HxDxL	**Catalog Number**	**Weight**
6x6x12	1-66P	9
6x6x24	2-66P	16
6x6x36	3-66P	24
6x6x48	4-66P	29
6x6x60	5-66P	37
6x6x120	10-66P	76
6′ FITTINGS		
90L	6-90P	8
45L	6-45P	5
Cross	6-CP	11
Tees	6-TPN12	10
End Plate	6-EPP	3
Cut-Off	6-CFP	8
1" Nipple	6-NIP	3
2" Nipple	6-N2P	4
3" Nipple	6-N3P	4
Box Connector	6-BCP	1
Reducer	6-RPN12	2
Drop Hanger	6-DHP	2
Bracket Hanger	6-BHP	2
WIREWAY SIZE HxDxL	**Catalog Number**	**Weight**
8x8x12	1-88P	12
8x8x24	2-88P	21
8x8x36	3-88P	29
8x8x48	4-88P	39
8x8x60	5-88P	49
8x8x120	10-88P	78
8″ FITTINGS		
90L	8-90P	12
45L	8-45P	7
Cross	8-CP	16
Tee	8-TPN12	14
End Plate	8-EPP	4
Cut-Off	8-CFP	11
1" Nipple	8-NIP	4
2" Nipple	8-N2P	4
3" Nipple	8-N3P	4
Box Connector	8-BCP	2
Reducer	8-RPN12	3
Drop Hanger	8-DHP	7
Bracket Hanger	8-BHP	4

STANDARD PUSH BUTTON ENCLOSURES TYPE 12

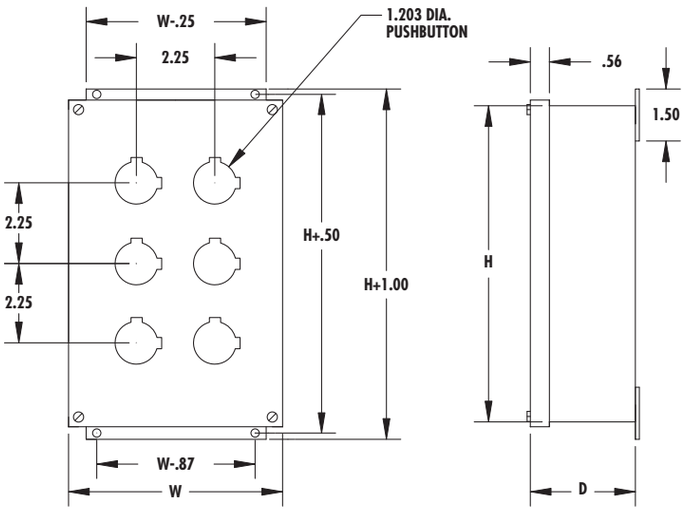

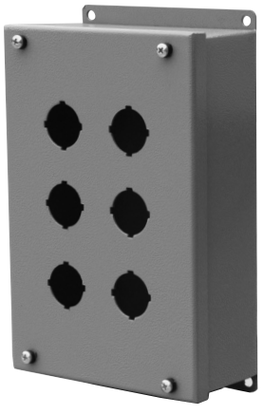

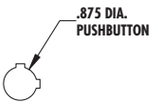

MINIATURE PUSHBUTTON SIZE SUFFIX - PBM

c UL us LISTED

CONSTRUCTION:
- CODE GAUGE PAINT GRIP GALVANIZED STEEL
- OIL RESISTANT GASKET

FINISH:
- ANSI 61 GRAY POLYESTER POWDER COATING INSIDE AND OUT

Enclosure Size HxWxD	Catalog Number	Weight
3.50x3.25x2.75	1PB	2
5.75x3.25x2.75	2PB	2
8.00x3.25x2.75	3PB	3
10.25x3.25x2.75	4-PBV	4
7.25x6.25x3.00	4-PB	4
12.50x3.25x2.75	5-PB	5
9.50x6.25x3.00	6-PB	7
14.75x3.25x2.75	6-PBV	7
20.25x3.25x2.75	8-PB	8
9.50x8.50x3.00	9-PB	8
24.75x3.25x2.75	10-PB	8
11.75x8.50x3.00	12-PB	9
11.75x10.75x3.00	16-PB	11

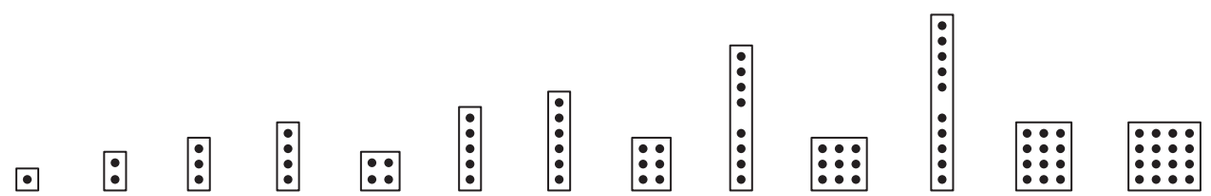

Note: For Miniature Push button Replace "**PB**" Suffix with **PBM**

CONSTRUCTION:
- CODE GAUGE PAINT GRIP GALVANIZED STEEL
- OIL RESISTANT GASKET

FINISH:
- ANSI 61 GRAY POLYESTER POWDER COATING INSIDE AND OUT

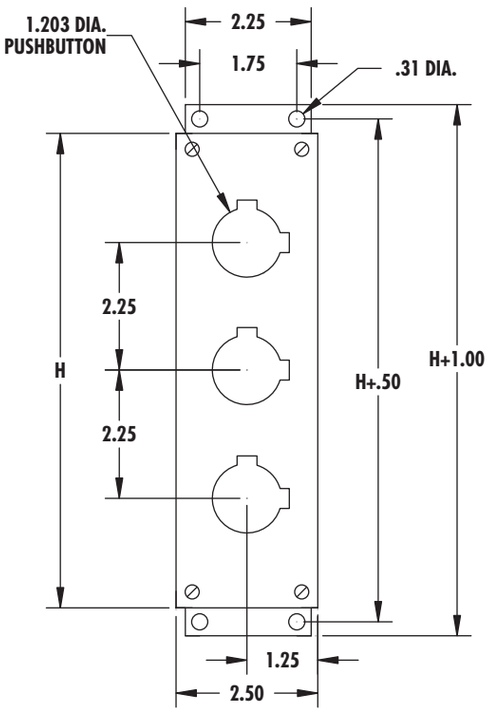

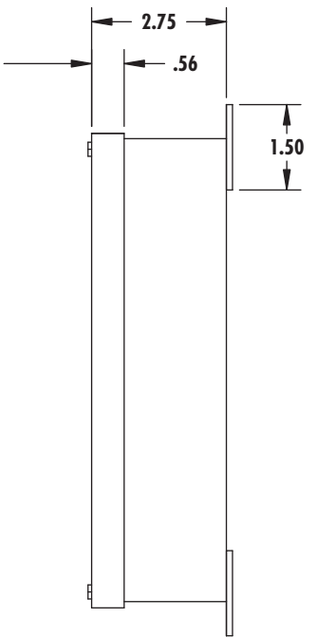

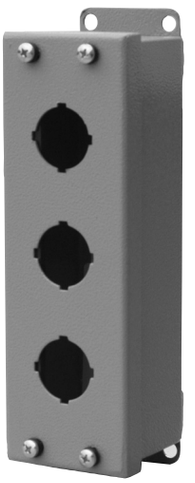

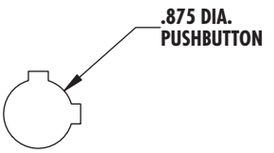

MINIATURE PUSH BUTTON SIZE
SUFFIX - PBM

TYPE 12

Enclosure Size HxWxD	Catalog Number	Weight
4x2.510x2.50	1-PBS	2
6.25X2.50X2.50	2-PBS	2
8.25X2.50X2.50	3-PBS	3
10.75X2.50X2.50	4-PBS	4
13X2.50X2.50	5-PBS	5

NOTE: FOR MINIATURE SLIM PUSH BUTTON REPLACE **"PBS"** SUFFIX WITH **PBSM**

EXTRA LARGE PUSH BUTTON ENCLOSURE WITH HINGED COVER AND BACK PANEL TYPE 12

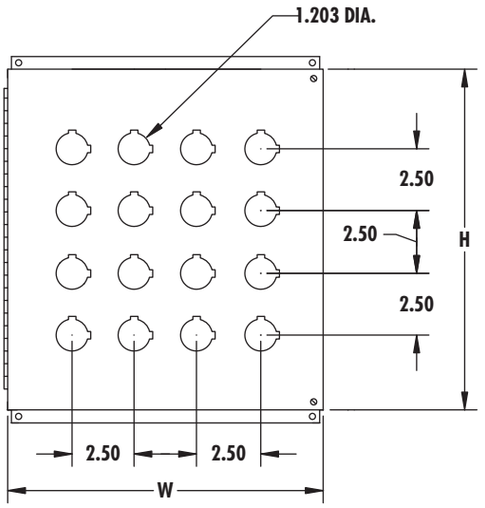

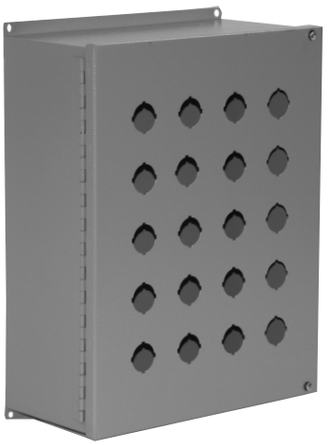

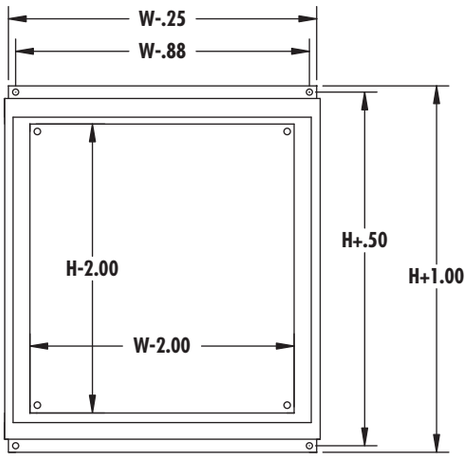

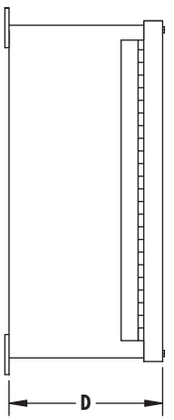

c UL us LISTED

CONSTRUCTION:
- CODE GAUGE PAINT GRIP GALVANIZED STEEL
- CONTINUOUS HINGE
- OIL RESISTANT GASKET
- 14 GAUGE PAINTED PANEL

FINISH:
- ANSI 61 GRAY POLYESTER POWDER COATING INSIDE AND OUT

NOTE: For Miniature Push Button, replace **"PB"** suffix with **"PBM"**

Enclosure Size HxWxD	Catalog Number	Weight
8.50x7.50x50x6	4-PBH	10
11x7.50x6	6-PBH	12
11x10x6	9-PBH	15
13.50x10x6	12-PBH	17
13.50x12.50x6	16-PBH	19
16x12.50x6	20-PBH	25
16x15x6	25-PBH	27
18.50x15x6	30-PBH	29
18.50x17.50x6	36-PBH	34
21x17.50x6	42-PBH	38

Note: For Miniature Push button Replace **"PBH"** Suffix with **PBHM**

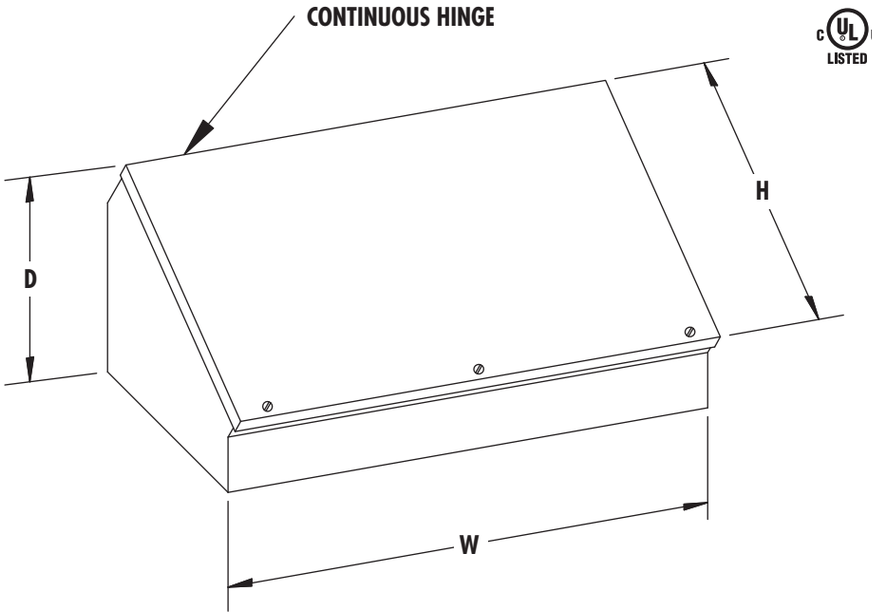

c UL us LISTED

CONSTRUCTION:
- CODE GAUGE PAINT GRIP GALVANIZED STEEL
- SEAMS CONTINUOUSLY WELDED AND GROUND SMOOTH
- CONTROL PANELS ATTACHED WITH CONTINUOUS HINGE ALONG BOTTOM EDGE
- OIL RESISTANT GASKET

FINISH:
- ANSI 61 GRAY POLYESTER POWDER COATING INSIDE AND OUT

TYPE 12

Enclosure Size HxWxD	Catalog Number	Weight
8x8x7 5/32	EB88C	9
8x12x7 5/32	EB812C	11
8x16x7 5/32	EB816C	14
8x20x7 5/32	EB820C	17
12x12x9 5/32	EB1212C	15
12x16x9 5/32	EB1216C	20
12x20x9 5/32	EB1220C	24
12x24x9 5/32	EB1224C	28
16x16x11 5/32	EB1616C	25
16x20x11 5/32	EB1620C	29
16x24x11 5/32	EB1624C	35
16x30x11 5/32	EB1630C	42
16x36x11 5/32	EB1636C	47
20x20x13 5/32	EB2020C	36
20x24x13 5/32	EB2024C	42
20x30x13 5/32	EB2030C	50

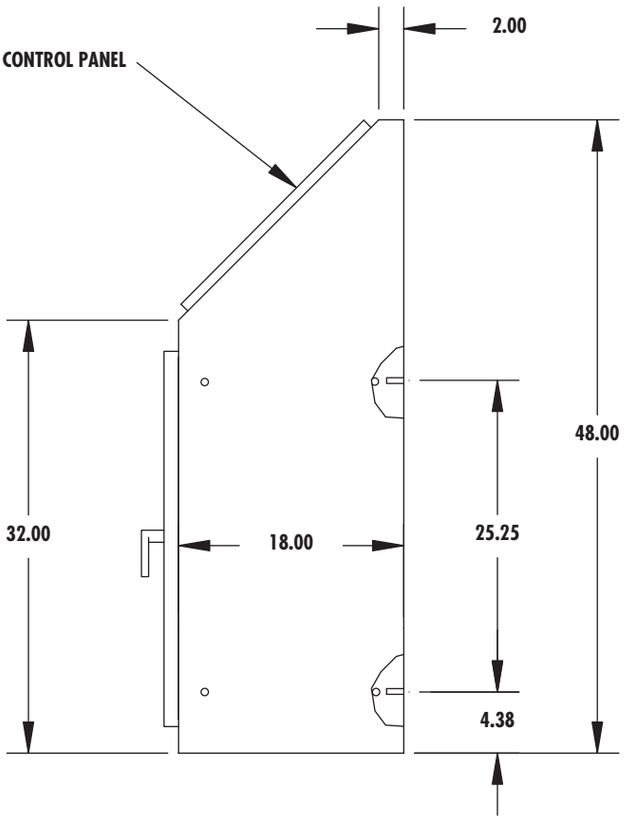

c UL us LISTED

CONSTRUCTION:
- CODE GAUGE PAINT GRIP GALVANIZED STEEL
- SEAMS CONTINUOUSLY WELDED AND GROUND SMOOTH
- 3-POINT LATCH OPERATED BY KEYLOCKING/ PADLOCKING L-HANDLE
- ONE SLOPING CONTROL PANEL HINGED ALONG BOTTOM EDGE
- OIL RESISTANT GASKET
- STUDS PROVIDED FOR MOUNTING ONE, TWO, OR THREE OPTIONAL PANELS

FINISH:
- ANSI 61 GRAY POLYESTER POWDER COATING INSIDE AND OUT

Enclosure Size	Catalog Number	Weight
924B		
Console Body 24.00" Wide	EB924B	150
Back + Side Panel	3020P	16
936B		
Console Body 36.00" Wide	EB936B	186
Back Panel	3030P	24
Side Panel	3020P	16

TYPE 12

STEEL OIL-TIGHT HOLE SEALS

Description	Max. Hole Diameter	Hole Seal Diameter	Catalog Number
Miniature Oil-Tight PB Holes	0.88"	1.22"	PBMHS
Standard Oil-Tight PB Holes	1.25"	1.75"	PBHS
1/2″ Conduit Holes	0.88"	1.38"	50HS
3/4″ Conduit Holes	1.06"	1.56"	75HS
1″ Conduit Holes	1.38"	1.88"	100HS
1-1/4″ Conduit Holes	1.69"	2.19"	125HS
1-1/2″ Conduit Holes	2.00"	2.50"	150HS
2″ Conduit Holes	2.50"	3.00"	200HS
2-1/2″ Conduit Holes	3.00"	3.50"	250HS
3″ Conduit Holes	3.62"	4.12"	300HS
3-1/2″ Conduit Holes	4.12"	4.62"	350HS
4″ Conduit Holes	4.62"	5.12"	400HS

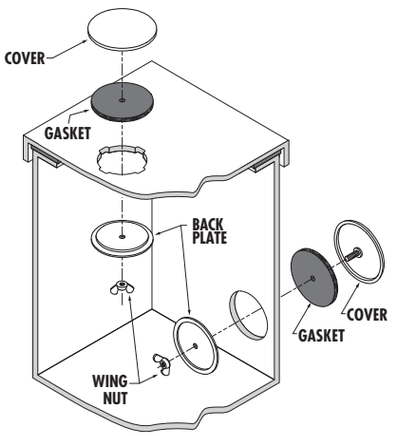

STAINLESS STEEL OIL-TIGHT HOLE SEALS

Description	Max. Hole Diameter	Hole Seal Diameter	Catalog Number
Miniature Oil-Tight PB Holes	0.88"	1.22"	SPBMHS
Standard Oil-Tight PB Holes	1.25"	1.75"	SPBHS
1/2″ Conduit Holes	0.88"	1.38"	S50HS
3/4″ Conduit Holes	1.06"	1.56"	S75HS
1″ Conduit Holes	1.38"	1.88"	S100HS
1-1/4″ Conduit Holes	1.69"	2.19"	S125HS
1-1/2″ Conduit Holes	2.00"	2.50"	S150HS
2″ Conduit Holes	2.50"	3.00"	S200HS
2-1/2″ Conduit Holes	3.00"	3.50"	S250HS
3″ Conduit Holes	3.62"	4.12"	S300HS
3-1/2″ Conduit Holes	4.12"	4.62"	S350HS

Application

E-Box Hole Seals are used to seal unused push button holes, conduit and knockout holes and other openings of irregular shapes and size against dust, dirt, water and oil. They will cover holes ranging in sizes from .19" through 4.00", and can be used on enclosures having a wall thickness up to .31".

Design

An Oil Tight Hole Seal has a cover with a 1/16" flange formed around the perimeter and a #10 x 5/8 stud welded in the center. A gasket is placed over the stud and these two parts are usually positioned on the outside of the enclosure. A backplate and wing nut are fastened to the Seal from the inside of the enclosure. As the wing nut is tightened, the cover compresses the gasket and seals the hole.

Materials

#10-21 x 5/8 studs are zinc plated for steel Seals and stainless steel for stainless steel Seals. Wing nuts for stainless steel covers are 18-8 stainless steel. Wing nuts for steel covers are A-36 steel. All gaskets are oil-resistant closed cell neoprene.

Finish

Steel hole seal covers are painted ASA-61 gray over a zinc coated surface. Backplates are unpainted galvanized steel. Stainless steel hole seal covers are polished to a #3 finish and backplates are T304 SS with #2B finish. Steel wing nuts are zinc plated with a yellow dichromate rinse.

Note: Non-stocking items made per order: Once order is placed in production it **cannot** be cancelled.

L-HANDLE PADLOCKING
Catalog Number LHP

L-HANDLE KEYLOCKING
Catalog Number LHK

HEAVY DUTY KEYLOCKING AND PADLOCKABLE L-HANDLE
Catalog Number LHKPL

WING-KNOB KEYLOCKING
Catalog Number WKK

T-HANDLE KEYLOCKING
Catalog Number THL

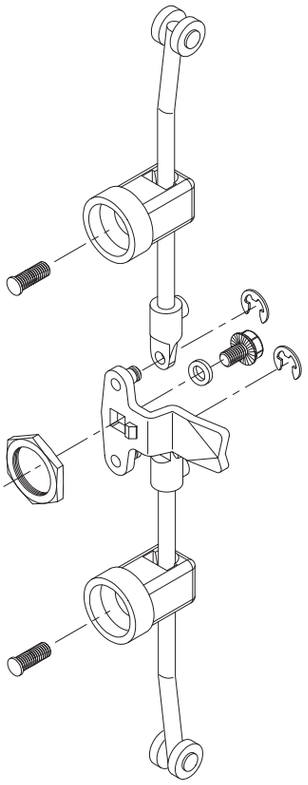

THREE POINT LATCH
Catalog Number TPL-1
Catalog Number TPL-12

Catalog Number
FBK

Catalog Number
SFBK

FLUSH BARREL KEYLOCKING

WING-KNOB PADLOCKING
Catalog Number WKPL

TYPE 12 AND 4 STAINLESS STEEL QUICK RELEASE LATCH (JIC STYLE)
Catalog Number JQRL

FLUSH BARREL COINTURN
Catalog Number FBC

HEAVY DUTY THREE POINT LATCH
Catalog Number ATPL-12

TYPE 12 AND 4 STAINLESS STEEL QUICK RELEASE LATCH
Catalog Number N4QRL

SINGLE POINT LATCH
Catalog Number SPL-1
Catalog Number SPL-12

ACCESSORIES

LOUVER PLATE KITS (PAINTED)

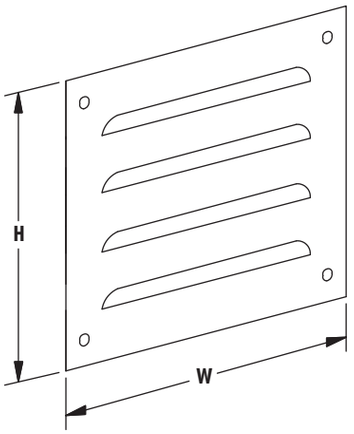

Size Plate HxW	Louver Length	Number Louvers	Catalog Number	Weight
5.75x6.00	4"	3	43LV	1.00
7.25x6.00	4"	4	44LV	1.50
10.25x6.00	4"	6	46LV	2.00
7.25x11.00	4"	4 two rows	44-2LV	2.25
10.25x11.00	4"	6 two rows	46-2LV	3.00

GALVANIZED FLUSH COVERS

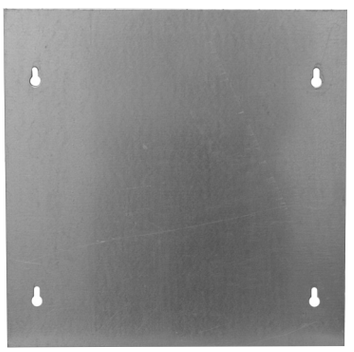

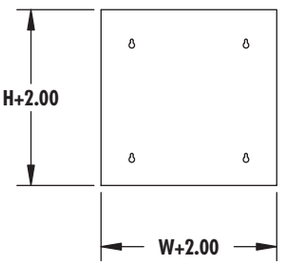

Enclosure Size HxW	Catalog Number	Weight
4x4	44FC	1
6x6	66FC	1
8x6	86FC	1
8x8	88FC	2
10x8	108FC	2
10x10	1010FC	2
12x8	128FC	2
12x10	1210FC	3
12x12	1212FC	4
15x12	1512FC	5
15x15	1515FC	5
18x12	1812FC	5
18x15	1815FC	6
18x18	1818FC	6
24x18	2418FC	10
24x24	2424FC	14

FOR LARGE QUANTITIES CALL FACTORY

FLOOR STAND KITS – PAINTED

Size HxD	Catalog Number	Weight
6x8	FK68	14
6x10	FK610	16
6x12	FK612	18
6x18	FK618	29
12x8	FK128	22
12x10	FK1210	25
12x12	FK1212	27
12x16	FK1216	33

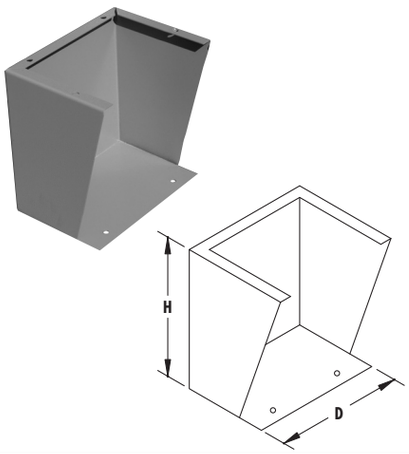

STAINLESS STEEL-FLOOR STAND KITS

Size HxD	Catalog Number	Weight
12x8	SFK128	22
12x10	SFK1210	25
12x12	SFK1212	27
12x16	SFK1216	33

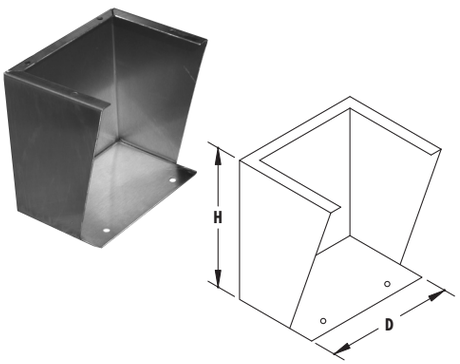

DRIP SHIELD KITS FOR TYPE 12 & TYPE 4 ENCLOSURES-PAINTED

Width of Enclosure	Catalog Number	Weight
12" wide box	12DK	1.5
16" wide box	16DK	1.9
20" wide box	20DK	2.0
24" wide box	24DK	2.8
30" wide box	30DK	3.3
36" wide box	36DK	3.5
42" wide box	42DK	4.3
48" wide box	48DK	5.0
60" wide box	60DK	6.0
72" wide box	72DK	7.0

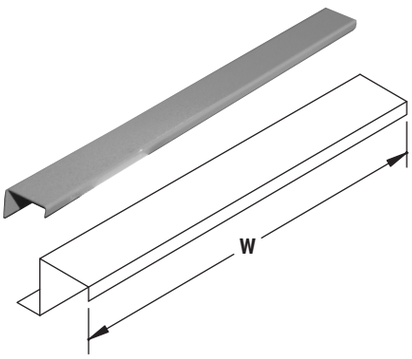

STAINLESS STEEL DRIP SHIELD KITS FOR TYPE 12 & TYPE 4 ENCLOSURES

Width of Enclosure	Catalog Number	Weight
12" wide box	12SSDK	1.5
16" wide box	16SSDK	2.0
20" wide box	20SSDK	2.5
24" wide box	24SSDK	2.7
30" wide box	30SSDK	3.2
36" wide box	36SSDK	4.0

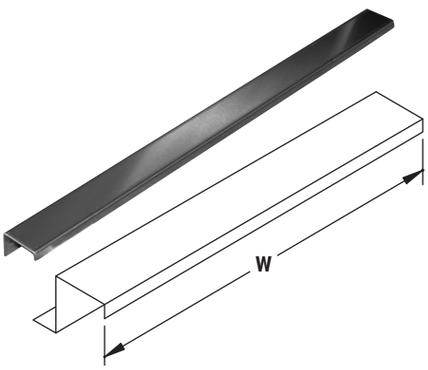

PAINTED PANELS FOR TYPE 4 – 12 AND 3R ENCLOSURES

J SERIES PANELS

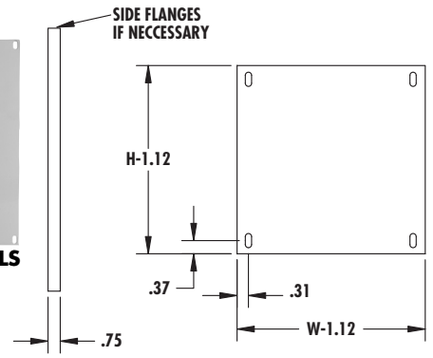

J SERIES PANELS

P SERIES PANELS

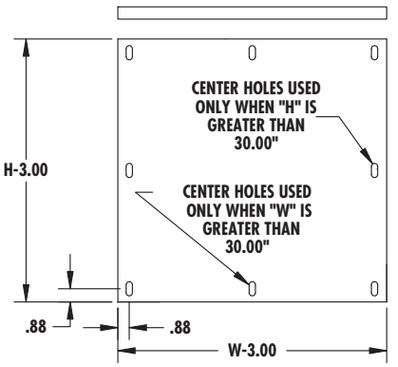

P SERIES PANELS

Enclosure Size HxW	Catalog Number	Weight
6x4	64PJ	1
6x6	66PJ	1
8x6	86PJ	1
8x8	88PJ	1
10x8	108PJ	1
10x10	1010PJ	2
12x6	126PJ	1
12x10	1210PJ	2
12x12	1212PJ	3
14x8	148PJ	3
14x12	1412PJ	3
16x10	1610PJ	3
16x14	1614PJ	5
16x12	1612P	4
16x16	1616P	6
20x12	2012P	5
20x16	2016P	9
20x20	2020P	10
24x12	2412P	7
24x16	2416P	9
24x18	2418P	12
24x20	2420P	13
24x24	2424P	15
30x16	3016P	12
30x20	3020P	16
30x24	3024P	19
30x30	3030P	24
36x16	3616P	14
36x24	3624P	24
36x30	3630P	30
36x36	3636P	37
40x24	4024P	40
42x24	4224P	25
42x30	4230P	35
42x36	4236P	43
42x42	4242P	50
48x24	4824P	31
48x30	4830P	40
48x36	4836P	49
48x48	4848P	80
60x24	6024P	50
60x30	6030P	50
60x36	6036P	61
72x36	7236P	74

ALUMINUM PANELS FOR TYPE 4 – 12 AND TYPE 3R ENCLOSURES

J SERIES PANELS

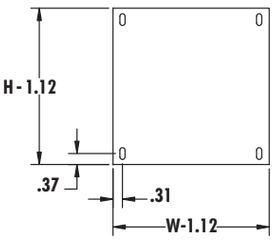

J SERIES PANELS

P SERIES PANELS

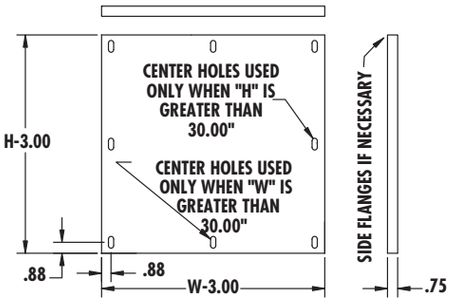

P SERIES PANELS

Enclosure Size HxW	Catalog Number	Weight
6X6	A66PJ	.5
8X6	A86PJ	.5
10X8	A108PJ	.5
12X10	A1210PJ	1
14X12	A1412PJ	2
16X14	A1614PJ	2
16X12	A1612P	1
20X16	A2016P	3
20X20	A2020P	4
24X20	A2420P	5
24X24	A2424P	6
30X24	A3024P	7
36X24	A3624P	9
36X30	A3630P	11
48X36	A4836P	19
60X36	A6036P	24

STAINLESS STEEL PANELS FOR TYPE 4 – 12 AND TYPE 3R ENCLOSURES

Enclosure Size HxW	Catalog Number	Weight
6x4	S64PJ	1
6x6	S66PJ	1
8x6	S86PJ	1
8x8	S88PJ	1
10x8	S108PJ	1
10x10	S1010PJ	2
12x6	S126PJ	1
12x10	S1210PJ	2
12x12	S1212PJ	3
14x12	S1412PJ	3
16X14	S1614PJ	5
16X12	S1612P	4
16X16	S1616P	6
20X16	S2016P	7
20X20	S2020P	9
24X12	S2412P	7
24X16	S2416P	9
24X20	S2420P	13
24X24	S2424P	15
30X20	S3020P	16
30X24	S3024P	19
30X30	S3030P	24
36X24	S3624P	24
36X30	S3630P	30
36X36	S3636P	37
42X30	S4230P	35
42X36	S4236P	43
48X30	S4830P	40
48X36	S4836P	49
60X36	S6036P	61

GALVANIZED PANELS FOR TYPE 4 – 12 AND TYPE 3R - ENCLOSURES

J SERIES

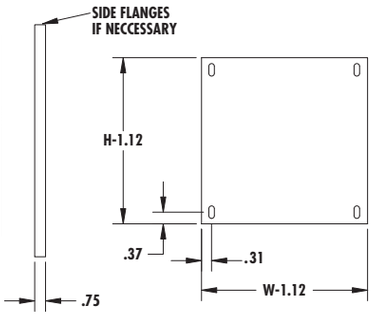

J SERIES PANELS

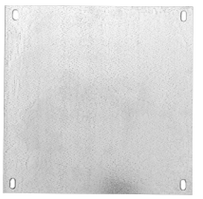

P SERIES

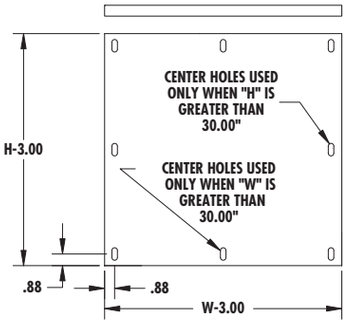

P SERIES PANELS

Enclosure Size HxW	Catalog Number	Weight
6x4	G64PJ	1
6x6	G66PJ	1
8x6	G86PJ	1
8x8	G88PJ	1
10x8	G108PJ	1
10x10	G1010PJ	2
12x6	G126PJ	1
12x10	G1210PJ	2
12x12	G1212PJ	3
14x8	G148PJ	3
14x12	G1412PJ	3
16x10	G1610PJ	3
16x14	G1614PJ	5
16x12	G1612P	4
16x16	G1616P	6
20x12	G2012P	5
20x16	G2016P	9
20x20	G2020P	10
24x12	G2412P	7
24x16	G2416P	9
24x18	G2418P	12
24x20	G2420P	13
24x24	G2424P	15
30x16	G3016P	12
30x20	G3020P	16
30x24	G3024P	19
30x30	G3030P	19
36x16	G3616P	14
36x24	G3624P	24
36x30	G3630P	30
36x36	G3636P	37
40x24	G4024P	40
42x24	G4224P	25
42x30	G4230P	35
42x36	G4236P	43
42x42	G4242P	50
48x24	G4824P	31
48x30	G4830P	40
48x36	G4836P	49
48x48	G4848P	80
60x24	G6024P	50
60x30	G6030P	50
60x36	G6036P	61
72x36	G7236P	74

FOR LARGE QUANTITIES CALL FACTORY

NOTES

NOTES

Phone 888-231-7580 • Fax 888-329.3269
www.e-boxenclosures.com • sales@e-boxenclosures.com