SATCO

LED

February 2019

SATCO® | NUVO®

LED LAMP REFERENCE GUIDE

JANUARY, 2019

We are pleased to present the latest edition of our LED Lamp Reference Guide. Many new LED lamps and fixtures have been added, and each section is arranged to make finding the right product easy.

Brilliance

Satco is committed to providing unsurpassed quality, service and product assortment. Many of our product categories are supported by merchandising systems, displays and a selection of attention-getting point of purchase materials. These efforts, along with our strategic locations, make Satco the preferred choice for light sources and electrical related products.

Six convenient locations

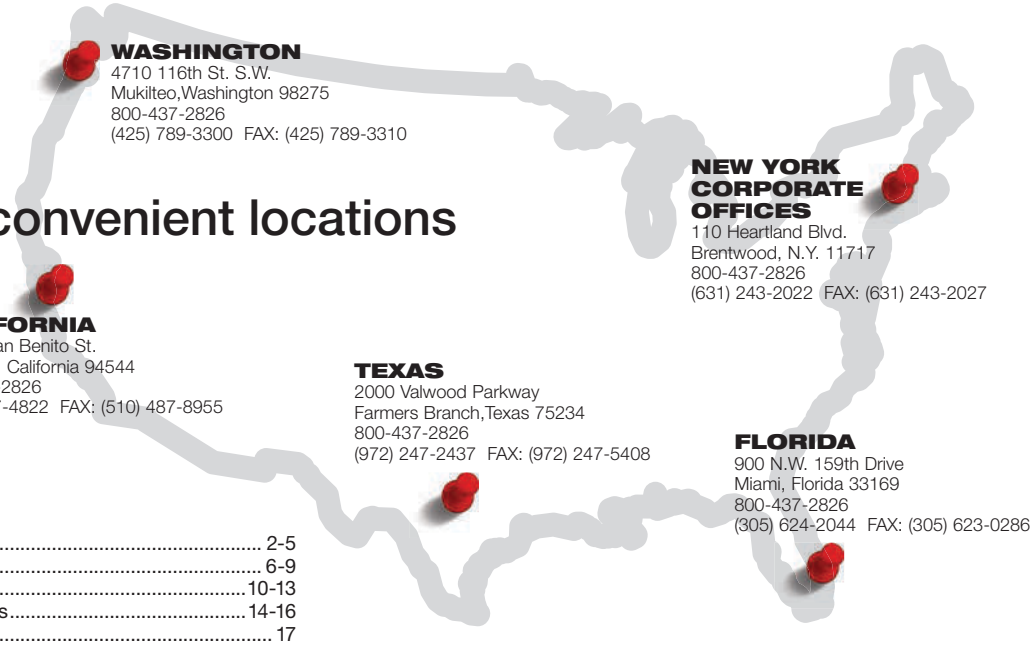

WASHINGTON
4710 116th St. S.W.
Mukilteo,Washington 98275
800-437-2826
(425) 789-3300 FAX: (425) 789-3310

NEW YORK CORPORATE OFFICES
110 Heartland Blvd.
Brentwood, N.Y. 11717
800-437-2826
(631) 243-2022 FAX: (631) 243-2027

CALIFORNIA
31288 San Benito St.
Hayward, California 94544
800-437-2826
(510) 487-4822 FAX: (510) 487-8955

TEXAS
2000 Valwood Parkway
Farmers Branch,Texas 75234
800-437-2826
(972) 247-2437 FAX: (972) 247-5408

FLORIDA
900 N.W. 159th Drive
Miami, Florida 33169
800-437-2826
(305) 624-2044 FAX: (305) 623-0286

PUERTO RICO
Bldg 3, Compeche St. 22
Julio N. Matos Industrial Park
Carolina, PR 00984
800-437-2826
(787) 757-3510 Fax: (787) 757-3540

Contents

About Satco 2-5
Retail Support 6-9
LED Filament Lamps 10-13
Vintage Style LED Filament Lamps 14-16
Carded LED Lamps 17
Carded LED Specialty Lamps 18-19
Omni-Directional LED A19 Lamps and Lamp Display Packs ... 20-25
Omni-Directional LED A19 & A21 Lamps 26-27
Replacement LED A21 120-277V 27
Decorative LED Flame Lamp 28
Omni-Directional 3-Way Lamps 29
LED Candelabra Base A19 & Colored Lamps 30
Omni-Directional A15 & Low Voltage A19 LED Lamps 31
Decorative & Linear T10 LED Lamps 32
LED Reflector Lamps & LED PAR Lamps 33-35
LED PAR Lamps 35-39
LED PAR16, MR11 & MR16 Lamps 40-41
MR16 GU10 & LED Specialty Replacement Lamps 42-43
LED Recessed Downlight Retrofits 44-49
LED Direct Wire Edge-Lit Downlights 50-51
LED Direct Wire Downlights 52-53
LED Commercial Recessed Downlight Retrofits 54-55
12V LED Recessed Downlight Retrofits 56
LED Elevator Lamps 56
High Lumen LED Lamps 57-69
High Lumen LED PAR Lamps 66
PL/LED Ballast Bypass Replacement Lamps 70
LED/CFL Lamps 71-74
LED T8 & U-bend Lamps 75
LED T8 Lamps 76-80
LED T5 Lamps 81-82
LED U-bend & T8 Dual Mode Ballast Bypass/Ballast Compatible Lamps 84-85
LED T9 CIrcline Lamps 86
Emergency Battery Backup and LED Driver 87
LED T8 Sign Lamps 88
LED Modules 89

Satco has two lines of product to help you meet California's Building and Appliance codes:

Building Code (Title 24):
The full line of Joint Appendix 8 (JA8) lamps are certified to the Title 24 2016 building code. These products will help you comply with the newest California residential building codes.

Appliance Code (Title 20):
Lamps and Retrofit Kits are considered appliances in the California Code, and Title 20 is one of the most stringent in the country. Satco has a full line of products that are compliant with this code.

As an ongoing effort on behalf of Satco Products, Inc. to remain dedicated to the improvement of our products, we reserve the right to change specifications. The information contained in this specification guide is subject to change without notice. We cannot be responsible for typographical errors.

At Satco, our business isn't about us.

It's about you and your business.

Satco and our Nuvo® and Hygrade™ brands have grown to be industry leaders by offering you the widest selection of lamps, fixtures and lighting components.

The most innovative technology.

The highest standards of quality and efficiency. And a reputation for service earned one customer at a time for almost 50 years.

Satco. Setting the standards.

With a vast catalog of products built to the highest quality standards, massive inventories, a highly automated nationwide distribution network, and a growing investment in research and development, few lighting manufacturers can match Satco's depth of industry experience.

The widest selection.

Satco keeps homes across North America lit through the thousands of retail outlets we supply with replacements lamps and consumer lighting accessories.

The residential and commercial building trades rely on Satco's comprehensive line of fixtures, track and outdoor lighting and lamps, which are widely available through electrical distributors across the country.

Lighting fixture manufacturers turn to Satco Logistics for on-time shipping of thousands of component parts in orders of any size, including lamps, ballasts, sockets, switches, cords, canopies and glassware of every description.

SATCO® | NUVO®

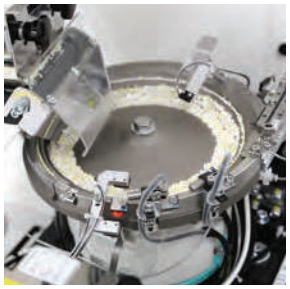

The most innovative technology.

Over the years, Satco's robust R&D programs have moved lighting technology forward with patented innovations that have been widely adopted throughout the industry that includes breaking new ground in the design and manufacture of high-efficiency LED lamps.

The highest quality and efficiency.

Every Satco product is designed, manufactured and tested to meet or exceed the highest industry standards for quality and performance. And we offer hundreds of products that have earned ENERGY STAR® certification. In fact, we were selected ENERGY STAR® Partner of the Year in 2009.

Over a million square feet of warehouse space.

The Satco brand has stood for quality, innovation and value in lighting products since 1966. From a 3,000 square foot warehouse in Elmont, NY, to more than 1.2 million square feet of U.S. Distribution space today. To be certain you'll have the parts you need where you need them, Satco maintains enormous amounts of inventories at our major distribution and sales centers.

Satco Distribution Centers

- New York
- Florida
- Texas
- California
- Washington
- Puerto Rico

Satco Express Stocking Locations

- Phoenix, AZ
- Lenexa, KS
- Charlotte, NC
- Chicago, IL
- Cleveland, OH
- La Mirada, CA
- Lavergne, TX
- Ringland, MS
- Syracuse, NY
- British Columbia CN
- Mississauga CN
- Ontario CN

Satco.
An innovative family of brands.

LED lamps that only experience can deliver.

With one of the industry's largest R&D programs behind it, Satco is producing LED replacement lamps that meet all of the newest efficiency standards – and exceed user expectations for light output, color temperature, beam pattern, diffusion, and overall reliability.

SATCO®

Hygrade. The leader in commercial lighting.

Hygrade has been a trusted name in commercial and industrial lighting for more than a century. From fluorescent and compact fluorescent lamps to high intensity discharge bulbs of every description, Hygrade offers a variety of cost effective, energy efficient products for virtually any commercial application.

HYGRADE™

Nuvo. Inspired designs. Enlightened engineering.

Nuvo Lighting was launched in 2005 with more than 1,500 new lighting fixtures – one of the largest catalogs of any manufacturer – and our product line has continued to grow every year since. Today offering more than 3,000 chandeliers, pendants and sconces in designs that range from classic to contemporary, from elegant to understated and from simple to stylish.

NUVO® LIGHTING

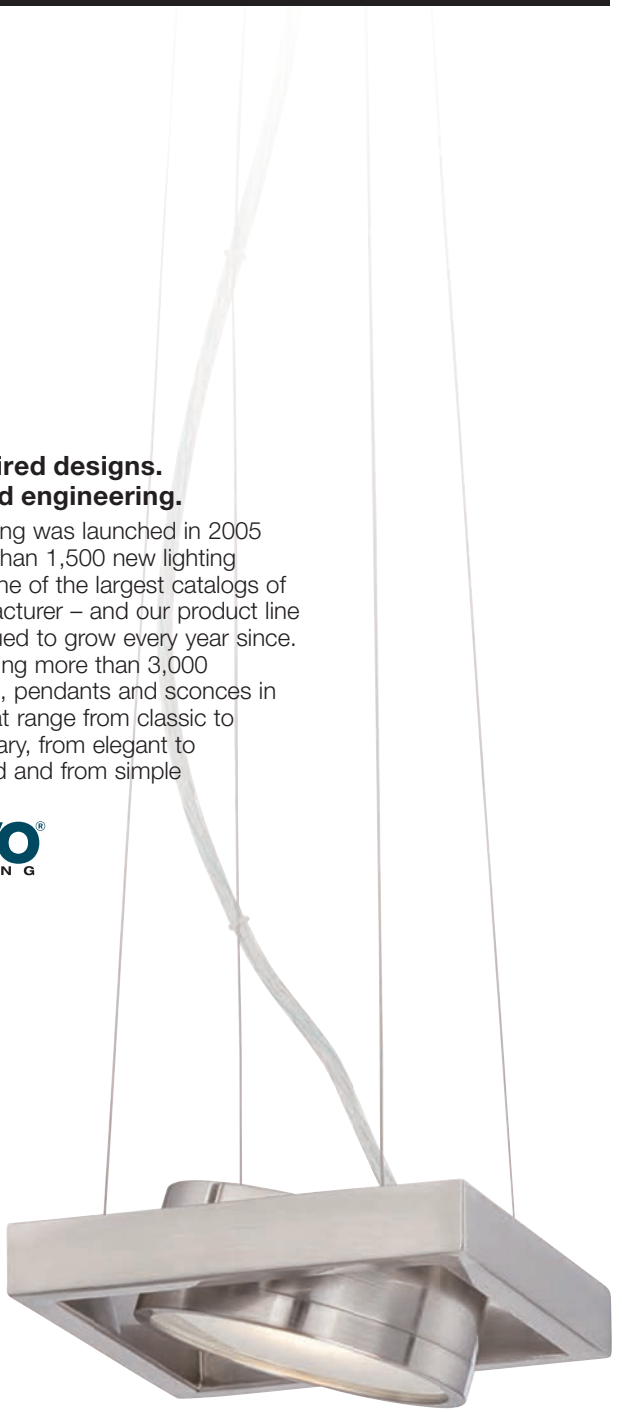

Energy Efficient Lamps and Fixtures Counter Card
Item # SA1458

Energy Efficient Lamps Counter Card
Item # SA1207

Paint Department Counter Card
Item # SA1456

Counter cards

Place these informative cards in other busy departments to remind customers about their lighting needs.

At Satco we don't just bring great products and great value to market. We help our products sell! We offer powerful in-store selling tools to help make the lighting center a focal point and profit center.

Educate customers and increase sales!

Satco hanging signs and gondola headers clearly call-out the lighting center while shelf strips and aisle flags indicate lamp technologies to help customers find exactly what they're looking for. And the shelf strips correspond to the attractive, informative Satco packaging! Our educational gondola headers educate consumers about all the current lighting technologies, the energy efficiency of each and what energy savings they can expect from each.

Counter cards, hanging signs, shelf-talkers and gondola aisle flags all help customers find the exact replacement lamp they need.

Let Satco help you increase your lighting sales dramatically! For information and how to order, please contact your Satco sales representative.

Logo banners

Measuring 5' x 2', Satco logo banners can be strategically placed, indoors or out, to direct customers to the lighting aisle or simply make customers aware you carry Satco lighting products.

Satco Brand Logo Banner
Item # SA1296

SA1265/1
SA1265/2
SA1265/3
SA1265/4
SA1265/5

Lighting Technology Gondola Shelf Strips
(Can be ordered separately)
Each strip measures 12" long
Item # SA1265

Packaging

Satco retail packaging is informative and attractive, creating an easy to navigate presentation for your customers. Coupled with consistent branding, lamp technology types are clearly indicated and all government regulations are adhered to for lumen output, wattage and cost to operate. Satco packaging makes choosing the right lamp easy.

Gondola shelf technology strips

Indicate what technologies are on what shelves. Grouping products by their technology has been shown to help customers find the products they want easily.

Shelf talkers

Are an important silent salesman, explaining a sale or calling attention to a new product.

Energy Efficient Shelf Talker
Item # SA1205

Generic
Lighting Center
Gondola Header
Item # SA1098
Header mounting hardware available

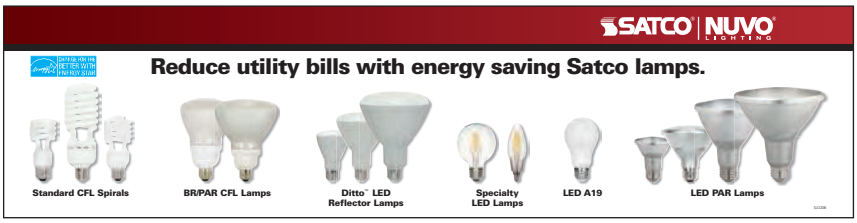

Energy Efficient Gondola Header
Item # SA1206
Header mounting hardware available

LED
Gondola Header
Item # SA2006
Header mounting hardware available

Gondola headers

Clearly call out your lighting center, and our educational versions help explain new vs. old lighting technologies and the savings your customers can expect from them. Customers making more informed decisions will be pleased with their purchase and remember the help they received in your store.

Product photos

Satco offers our entire library of product photos for use in your flyers and advertising. Our high-quality product and packaging images will show customers exactly what you're offering.

Aisle flags

Help define what's on each section of shelving for easy product location.

SA1292/1 SA1292/2 SA1292/3 SA1292/4 SA1292/5 SA1292/6

Lighting Technology
Aisle Violator Tags
Item # SA1292
Mounting hardware available

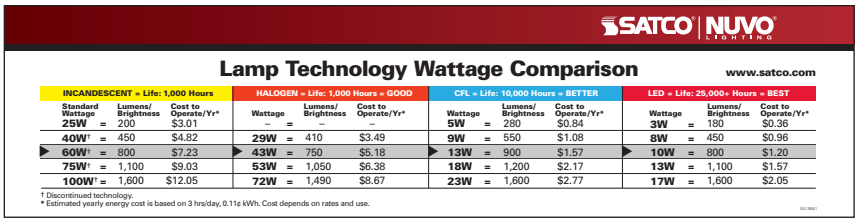

SATCO | NUVO LIGHTING

Lamp Technology Wattage Comparison

www.satco.com

INCANDESCENT = Life: 1,000 Hours				HALOGEN = Life: 1,000 Hours = GOOD				CFL = Life: 10,000 Hours = BETTER				LED = Life: 25,000+ Hours = BEST			
Standard Wattage		Lumens/ Brightness	Cost to Operate/Yr*	Wattage		Lumens/ Brightness	Cost to Operate/Yr*	Wattage		Lumens/ Brightness	Cost to Operate/Yr*	Wattage		Lumens/ Brightness	Cost to Operate/Yr*
25W	=	200	$3.01	–	=	–	–	5W	=	280	$0.84	3W	=	180	$0.36
40W†	=	450	$4.82	29W	=	410	$3.49	9W	=	550	$1.08	8W	=	450	$0.96
▶ 60W†	=	800	$7.23	▶ 43W	=	750	$5.18	▶ 13W	=	900	$1.57	▶ 10W	=	800	$1.20
75W†	=	1,100	$9.03	53W	=	1,050	$6.38	18W	=	1,200	$2.17	13W	=	1,100	$1.57
100W†	=	1,600	$12.05	72W	=	1,490	$8.67	23W	=	1,600	$2.77	17W	=	1,600	$2.05

† Discontinued technology.
* Estimated yearly energy cost is based on 3 hrs/day, 0.11¢ kWh. Cost depends on rates and use.

SA1285/1
Lamp Comparison Guide

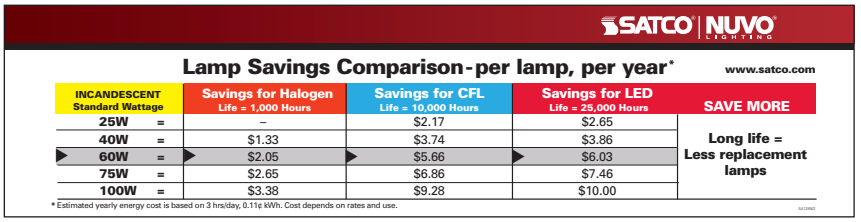

SATCO | NUVO LIGHTING

Lamp Savings Comparison-per lamp, per year*

www.satco.com

INCANDESCENT Standard Wattage		Savings for Halogen Life = 1,000 Hours	Savings for CFL Life = 10,000 Hours	Savings for LED Life = 25,000 Hours	SAVE MORE
25W	=	–	$2.17	$2.65	Long life = Less replacement lamps
40W	=	$1.33	$3.74	$3.86	
▶ 60W	=	▶ $2.05	▶ $5.66	▶ $6.03	
75W	=	$2.65	$6.86	$7.46	
100W	=	$3.38	$9.28	$10.00	

* Estimated yearly energy cost is based on 3 hrs/day, 0.11¢ kWh. Cost depends on rates and use.

SA1285/2
Lamp Savings Comparison

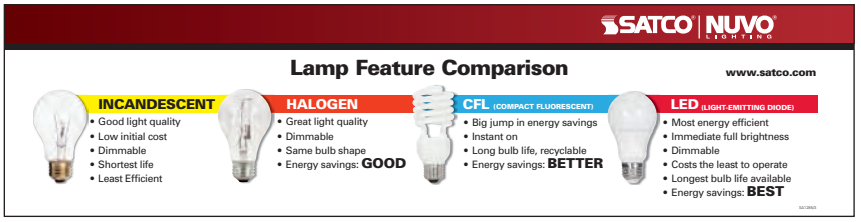

SATCO | NUVO LIGHTING

Lamp Feature Comparison

www.satco.com

INCANDESCENT
- Good light quality
- Low initial cost
- Dimmable
- Shortest life
- Least Efficient

HALOGEN
- Great light quality
- Dimmable
- Same bulb shape
- Energy savings: **GOOD**

CFL (COMPACT FLUORESCENT)
- Big jump in energy savings
- Instant on
- Long bulb life, recyclable
- Energy savings: **BETTER**

LED (LIGHT-EMITTING DIODE)
- Most energy efficient
- Immediate full brightness
- Dimmable
- Costs the least to operate
- Longest bulb life available
- Energy savings: **BEST**

SA1285/3
Lamp Features Comparison

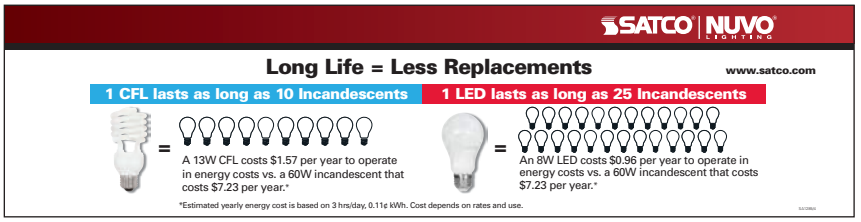

SATCO | NUVO LIGHTING

Long Life = Less Replacements

www.satco.com

1 CFL lasts as long as 10 Incandescents

= A 13W CFL costs $1.57 per year to operate in energy costs vs. a 60W incandescent that costs $7.23 per year.*

1 LED lasts as long as 25 Incandescents

= An 8W LED costs $0.96 per year to operate in energy costs vs. a 60W incandescent that costs $7.23 per year.*

*Estimated yearly energy cost is based on 3 hrs/day, 0.11¢ kWh. Cost depends on rates and use.

SA1285/4
Long Life = Less Replacements

SATCO | NUVO LIGHTING

Lumens: the new way to shop for light.

www.satco.com

Choose your next light bulb based on the brightness you want. For the greatest savings, choose ENERGY STAR® light bulbs.

Incandescent Wattage	Halogen Wattage	CFL Wattage	LED Wattage
~450	~410	~550	~450
~800	~750	~900	~800
~1100	~1050	~1200	~1100
~1600	~1490	~1600	~1600
40W	29W	9W	8W
60W	43W	13W	10W
75W	53W	18W	13W
100W	72W	23W	17W

SA1285/5
Lumens: The new way to shop for light

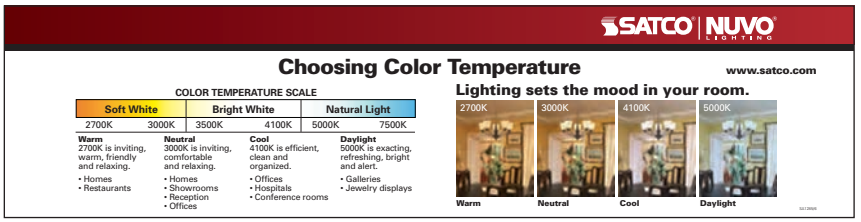

SATCO | NUVO LIGHTING

Choosing Color Temperature

www.satco.com

COLOR TEMPERATURE SCALE

Soft White		Bright White		Natural Light	
2700K	3000K	3500K	4100K	5000K	7500K

Warm 2700K is inviting, warm, friendly and relaxing.
- Homes
- Restaurants

Neutral 3000K is inviting, comfortable and relaxing.
- Homes
- Showrooms
- Reception
- Offices

Cool 4100K is efficient, clean and organized.
- Offices
- Hospitals
- Conference rooms

Daylight 5000K is exacting, refreshing, bright and alert.
- Galleries
- Jewelry displays

Lighting sets the mood in your room.

2700K Warm | 3000K Neutral | 4100K Cool | 5000K Daylight

SA1285/6
Choosing Color Temperature

Lamp Comparison Gondola Headers
SET: 6
(Can be ordered separately)
Item # SA1285
Header mounting hardware available

LED filament lamps

- LED with a traditional incandescent look and feel
- Omni-directional light source
- Dimmable
- Replaces up to 60 Watt lamps
- Damp location
- Approved for totally enclosed fixtures***
- c-UL-us listed
- Long life—up to 25,000 hours
- ENERGY STAR certified*
- 3 Year warranty

S8550
A15

S9874
A15

S9876, S9894
A19

S9845, S9846
A19

S9875, S9876, S29879,
S8850, S21712, S21713
A19

S9824, S29825
S21714
A19

S9826
A19

LED Filament Lamps

Item Number	Lamp Description	W	Bulb Type	Base	V	Finish	CCT	Lm	CRI	M.O.L. (Inches)	Life/ Hrs.	UPC	Pack
S9874*	4.5A15/CL/LED/E26/27K/ES/120V	4.5	A15	E26	120	Clear	2700K	450	80	3 ⅜	15K	045923098741	24/6
S9875*	4.5A19/CL/LED/E26/27K/ES/120V	4.5	A19	E26	120	Clear	2700K	450	80	4 ⅛	15K	045923098758	24/6
S9824	4.5A19/SW/LED/E26/27K/120V	4.5	A19	E26	120	Soft White	2700K	400	80	4 ⅛	15K	045923098246	24/6
S21712*	5A19/CL/LED/E26/27K/120V/**4PK**	5	A19	E26	120	Clear	2700K	450	80	4 ⅛	15K	045923217128	12-4pks
S9826†	6.5A19/SLV/LED/E26/27K/120V	6.5	A19	E26	120	Silver Crown	2700K	650	80	4 ⅛	15K	045923098260	24/6
S9894	6.5A19/CL/LED/E26/30K/120V	6.5	A19	E26	120	Clear	3000K	800	80	4 ⅛	15K	045923098949	24/6
S9876*	7A19/CL/LED/E26/27K/ES/120V	7	A19	E26	120	Clear	2700K	800	80	4 ⅛	15K	045923098765	24/6
S29825*	7A19/SW/LED/E26/27K/120V	7	A19	E26	120	Soft White	2700K	800	80	4 ⅛	15K	045923298257	24/6
S8850*	7A19/CL/LED/E26/40K/120V	7	A19	E26	120	Clear	4000K	800	80	4 ⅛	15K	045923088506	24/6
S21713*	7.5A19/CL/LED/E26/27K/120V/**4PK**	7.5	A19	E26	120	Clear	2700K	800	80	4 ⅛	15K	045923217135	12-4pks
S21714*	7.5A19/SW/LED/E26/27K/120V/**4PK**	7.5	A19	E26	120	Frosted	2700K	800	80	4 ⅛	15K	045923217142	12-4pks
S9845	9A19/CL/LED/E26/27K/120V	9	A19	E26	120	Clear	2700K	1100	80	4 ½	15K	045923098451	24/6
S9846	9A19/CL/LED/E26/30K/120V	9	A19	E26	120	Clear	3000K	1100	80	4 ½	15K	045923098468	24/6
90 CRI—CEC/T20													
S8550*	5A15/CL/LED/E26/27K/120V	5	A15	E26	120	Clear	2700K	450	90	3 ⅜	15K	045923085505	24/6
S29879*■	8A19/CL/LED/E26/27K/90CRI	8	A19	E26	120	Clear	2700K	800	91	4	15K	045923298790	24/6

† Silver crown are 180˚ beam angle. *** See warranty for details. ■ Also T24 compliant.

S8553
G16 1/2

S9870, S29871, S9988
G16 1/2

S29563, S9893, S8849, S9564, S29878
G25

S9827
G25

S9828
G25

S9565, S9566
G40

LED Globe Filament Lamps

360° BEAM | DIMMABLE | ENCLOSED FIXTURE | DAMP LOCATION | c UL us LISTED | * ENERGY STAR

Item Number	Lamp Description	W	Bulb Type	Base	V	Finish	CCT	Lm	CRI	M.O.L. (Inches)	Life/ Hrs.	UPC	Pack
S9870	2.5G16.5/LED/CL/27K/120V	2.5	G16 1/2	E12	120	Clear	2700K	200	80	3 3/16	15K	045923098703	24/6
S29871	4G16.5/LED/CL/27K/120V	4	G16 1/2	E12	120	Clear	2700K	350	80	3 3/16	15K	045923298714	24/6
S9988	4.5G16/LED/CL/27K/120V/E12	4.5	G16 1/2	E12	120	Clear	2700K	500	80	3 1/8	15K	045923099885	24/6
S29563*	4.5G25/CL/LED/E26/27K/120V	4.5	G25	E26	120	Clear	2700K	450	80	4 3/8	20K	045923295638	24/6
S9827*	4.5G25/SW/LED/E26/27K/120V	4.5	G25	E26	120	Soft White	2700K	430	80	4 3/8	15K	045923098277	24/6
S9828†	4.5G25/SLV/LED/E26/27K/120V	4.5	G25	E26	120	Silver Crown	2700K	430	80	4 3/8	15K	045923098284	24/6
S9893	4.5G25/CL/LED/E26/30K/120V	4.5	G25	E26	120	Clear	3000K	450	80	4 3/8	15K	045923098932	24/6
S8849*	4.5G25/CL/LED/E26/40K/120V	4.5	G25	E26	120	Clear	4000K	450	80	4 3/8	15K	045923088490	24/6
S9564	6.5G25/CL/LED/E26/27K/120V	6.5	G25	E26	120	Clear	2700K	810	80	4 3/8	15K	045923095641	24/6
S9565	4.5G40/CL/LED/E26/27K/120V	4.5	G40	E26	120	Clear	2700K	450	80	6 1/2	15K	045923095658	24/6
S9566	6.5G40/CL/LED/E26/27K/120V	6.5	G40	E26	120	Clear	2700K	800	80	6 1/2	15K	045923095665	24/6
90 CRI—CEC/T20													
S8553*	4.5G16/LED/CL/27K/120V/E12	4.5	G16 1/2	E12	120	Clear	2700K	350	90	3 3/16	15K	045923085536	24/6
S29878*■	5.5G25/CL/LED/E26/27K/90CRI	5.5	G25	E26	120	Clear	2700K	500	90	4 3/8	15K	045923298783	24/6

† Silver crown are 180˚ beam angle. *** See warranty for details. ■ Also T24 compliant.

S29877 **B10** | S9567, S9569, S9964, S21709 **C11** | S9570 **C11** | S29866, S9877, S29920, S29922, S29890, S8839, S9960, S9961, S21708 **C11** | S9868 **C11** | S9571, S9573, S9965 **CA11** | S9574 **CA11** | S29867, S29921, S29923, S29891, S8840, S9962, S9963 **CA11** | S9869 **CA11**

LED Decorative Filament Lamps

360° BEAM · DIMMABLE · ENCLOSED FIXTURE · DAMP LOCATION · c UL us LISTED · * ENERGY STAR

Item Number	Lamp Description	W	Bulb Type	Base	V	Finish	CCT	Lm	CRI	M.O.L. (Inches)	Life/ Hrs.	UPC	Pack
S9567*	2.5W ETC/LED/27K/120V	2.5	C11	E26	120	Clear	2700K	250	80	3 ½	25K	045923095672	24/6
S29920*	2.5W CTC/LED/CL/27K/120V	2.5	C11	E12	120	Clear	2700K	200	80	3 ⅞	15K	045923299209	24/6
S9868	3.5CTF/LED/FR/27K/120V	3.5	C11	E12	120	Frosted	2700K	350	80	4 5/16	15K	045923098680	24/6
S29922*	4W CTC/LED/27K/CL/120V	4	C11	E12	120	Clear	2700K	350	80	3 ⅞	15K	045923299223	24/6
S29890*	4W CTC/LED/30K/CL/120V	4	C11	E12	120	Clear	3000K	350	80	3 ⅞	15K	045923298905	24/6
S8839	4W CTC/LED/40K/CL/120V	4	C11	E12	120	Clear	4000K	350	80	3 ⅞	15K	045923088391	24/6
S29866*	4W CTC/LED/50K/CL/120V	4	C11	E12	120	Clear	5000K	350	80	4 5/16	15K	045923298660	24/6
S9569*	4.5W ETC/LED/27K/120V	4.5	C11	E26	120	Clear	2700K	450	80	3 ½	15K	045923095696	24/6
S9570*	4.5W CTC/LED/27K/120V	4.5	C11	E12	120	Clear	2700K	450	80	4 5/16	20K	045923095702	24/6
S21708*	4.5W CTC/LED/27K/CL/120V/**3PK**	4.5	B11	E12	120	Clear	2700K	350	80	3 ⅞	15K	045923217081	12-3pks
S21709*	4.5W ETC/LED/27K/CL/120V/**3PK**	4.5	B11	E26	120	Clear	2700K	350	80	3 ⅞	15K	045923217098	12-3pks
S9960*	5.5W CTC/LED/27K/CL/120V	5.5	C11	E12	120	Clear	2700K	500	80	3 ⅞	15K	045923099601	24/6
S9961*	5.5W CTC/LED/30K/CL/120V	5.5	C11	E12	120	Clear	3000K	500	80	3 ⅞	15K	045923099618	24/6
S9964*	5.5W ETC/LED/27K/CL/120V	5.5	C11	E26	120	Clear	2700K	500	80	3 ½	15K	045923099649	24/6
S9571	2.5W EFC/LED/27K/120V	2.5	CA11	E26	120	Clear	2700K	250	80	4 5/16	15K	045923095719	24/6
S29921*	2.5W CFC/LED/CL/27K/120V	2.5	CA11	E12	120	Clear	2700K	200	80	4 11/16	15K	045923299216	24/6
S9869	3.5CFF/LED/FR/27K/120V	3.5	CA11	E12	120	Frosted	2700K	350	80	5	15K	045923098697	24/6
S29923*	4W CFC/LED/27K/CL/120V	4	CA11	E12	120	Clear	2700K	350	80	4 11/16	15K	045923299230	24/6
S29891*	4W CFC/LED/30K/CL/120V	4	CA11	E12	120	Clear	3000K	350	80	4 11/16	15K	045923298912	24/6
S8840*	4W CFC/LED/40K/CL/120V	4	CA11	E12	120	Clear	4000K	350	80	4 11/16	15K	045923088407	24/6
S29867*	4W CFC/LED/50K/CL/120V	4	CA11	E12	120	Clear	5000K	350	80	5	15K	045923298677	24/6
S9573*	4.5W EFC/LED/27K/120V	4.5	CA11	E26	120	Clear	2700K	450	80	4 5/16	15K	045923095733	24/6
S9574	4.5W CFC/LED/27K/120V	4.5	CA11	E12	120	Clear	2700K	450	80	5	15K	045923095740	24/6
S9965*	5.5W EFC/LED/27K/CL/120V	5.5	CA11	E26	120	Clear	2700K	500	80	4 5/16	15K	045923099656	24/6
S9962*	5.5W CFC/LED/27K/CL/120V	5.5	CA11	E12	120	Clear	2700K	500	80	4 11/16	15K	045923099625	24/6
S9963*	5.5W CFC/LED/30K/CL/120V	5.5	CA11	E12	120	Clear	3000K	500	80	4 11/16	15K	045923099632	24/6
90 CRI—CEC/T20													
S29877*■	4.5W CTC/LED/27K/CL	4.5	B10	E12	120	Clear	2700K	350	90	3 ⅝	15K	045923098772	24/6
S8551*	4W ETC/LED/27K/CL/120V	4	B11	E26	120	Clear	2700K	350	90	3 ½	15K	045923085512	24/6
S8552*	4.5W CFC/LED/27K/CL/120V	4.5	CA10	E12	120	Clear	2700K	350	90	4 11/16	15K	045923085529	24/6

*** See warranty for details. ■ Also T24 compliant.

S9872 **T6** | S9575, S9576 **BT15** | S9581, S9895, S8851 **ST19** | S9580, S9892, S8841 **T10** | S9582 **T9** | S8559 **BT15** | S8554 **ST19** | S8555 **T6** | S8556 **T10**

LED Specialty Filament Lamps

360° BEAM | DIMMABLE | ENCLOSED FIXTURE | DAMP LOCATION | c UL us LISTED

Item Number	Lamp Description	W	Bulb Type	Base	V	Finish	CCT	Lm	CRI	M.O.L. (Inches)	Life/ Hrs.	UPC	Pack
S9872	2.5T6/LED/CL/27K/E12/120V	2.5	T6	E12	120	Clear	2700K	200	80	3 3/16	15K	045923098727	24/6
S9575	4.5BT15/CL/LED/E26/27K/120V	4.5	BT15	E26	120	Clear	2700K	450	80	4 1/8	15K	045923095757	24/6
S9576	6.5BT15/CL/LED/E26/27K/120V	6.5	BT15	E26	120	Clear	2700K	800	80	4 1/8	15K	045923095764	24/6
S9581	6.5ST19/CL/LED/E26/27K/120V	6.5	ST19	E26	120	Clear	2700K	810	80	5 1/2	15K	045923095818	24/6
S9895	6.5ST19/CL/LED/E26/30K/120V	6.5	ST19	E26	120	Clear	3000K	810	80	5 1/2	15K	045923098956	24/6
S8851	6.5ST19/CL/LED/E26/40K/120V	6.5	ST19	E26	120	Clear	4000K	810	80	5 1/2	15K	045923088513	24/6
S9580	4.5T10/LED/E26/27K/120V	4.5	T10	E26	120	Clear	2700K	430	80	5	15K	045923095801	24/6
S9892	4.5T10/LED/E26/30K/120V	4.5	T10	E26	120	Clear	3000K	430	80	5	15K	045923098925	24/6
S8841	4.5T10/LED/E26/40K/120V	4.5	T10	E26	120	Clear	4000K	450	80	5	15K	045923088414	24/6
S9582	6.5T9/CL/LED/E26/27K/120V	6.5	T9	E26	120	Clear	2700K	800	80	12	15K	045923095825	24/6
90 CRI—CEC/T20													
S8559	5.5BT15/CL/LED/E26/27K/120V	5.5	BT15	E26	120	Clear	2700K	550	90	3 3/8	15K	045923085598	24/6
S8554*	5.5ST19/CL/LED/E26/27K/120V	5.5	ST19	E26	120	Clear	2700K	500	90	5 1/2	15K	045923085543	24/6
S8555*	2.5T6/LED/CL/27K/E12/120V	2.5	T6	E12	120	Clear	2700K	180	90	3 3/16	15K	045923085550	24/6
S8556	4T10/LED/E26/27K/120V	4	T10	E26	120	Clear	2700K	350	90	5	15K	045923085567	24/6

*** See warranty for details.

Vintage style LED filament lamps

- LED with a traditional vintage look and feel
- Amber finish
- Omni-directional light source
- Dimmable
- 2000K - warm tone color temperature
- Replaces up to 60 Watt lamps
- Damp location
- Approved for totally enclosed fixtures**
- c-UL-us listed
- Long life—15,000 hours
- 3 Year warranty

S9577, S9578, S9579 **ST19** | S9585 **ST19** | S9583 **A19** | S9584 **G25** | S9588 **T9** | S9873 **T6** | S9986 **C11/E12** | S9987 **CA11/E12**

Vintage Style LED Filament Lamps

360° BEAM | DIMMABLE | ENCLOSED FIXTURE | DAMP LOCATION | c UL us LISTED

Item Number	Lamp Description	W	Bulb Type	Base	V	Finish	CCT	Lm	CRI	M.O.L. (Inches)	Life/ Hrs.	UPC	Pack
ST19													
S9577	2.5ST19/AMB/LED/E26/2K/120V	2.5	ST19	E26	120	Amber	2000K	220	80	5 ⅜	15K	045923095771	24/6
S9578	4.5ST19/AMB/LED/E26/2K/120V	4.5	ST19	E26	120	Amber	2000K	400	80	5 ⅜	15K	045923095788	24/6
S9579	6.5ST19/AMB/LED/E26/2K/120V	6.5	ST19	E26	120	Amber	2000K	650	80	5 ⅜	15K	045923095795	24/6
S9585	4.5ST19LONG/AMB/LED/E26/2K/120V	4.5	ST19	E26	120	Amber	2000K	380	80	5 ½	15K	045923095856	24/6
A19													
S9583	4.5A19/AMB/LED/E26/2K/120V	4.5	A19	E26	120	Amber	2000K	380	80	4 ⅛	15K	045923095832	24/6
G25													
S9584	4.5G25/AMB/LED/E26/2K/120V	4.5	G25	E26	120	Amber	2000K	380	80	4 ⅜	15K	045923095849	24/6
T9													
S9588	6.5T9/AMB/LED/E26/2K/120V	6.5	T9	E26	120	Amber	2000K	620	80	12	15K	045923095887	24/6
T6													
S9873	2.5T6/AMB/LED/E12/2K/120V	2.5	T6	E12	120	Amber	2000K	150	80	3 3/16	15K	045923098734	24/6
C11													
S9986	3.5CTA/AMB/LED/2K/120V	3.5	C11	E12	120	Amber	2000K	300	80	4 5/16	15K	045923099861	24/6
CA11													
S9987	3.5CFA/AMB/LED/2K/120V	3.5	CA11	E12	120	Amber	2000K	300	80	5	15K	045923099878	24/6

** See warranty for details.

Vintage style LED sprial filament lamps

- LED with a traditional vintage look and feel
- Amber finish
- Omni-directional light source
- Dimmable
- 2000K - warm tone color temperature
- Replaces up to 60 Watt lamps
- Damp location
- Approved for totally enclosed fixtures**
- c-UL-us listed
- Long life—15,000 hours
- 3 Year warranty

S9967 **ST19** | S9966 **A19** | S9968 **G30** | S9969 **G40** | S9971 **T9** | S9970 **B10**

360° BEAM · DIMMABLE · ENCLOSED FIXTURE · DAMP LOCATION · c UL us LISTED

Vintage Style LED Spiral Filament Lamps

Item Number	Lamp Description	W	Bulb Type	Base	V	Finish	CCT	Lm	CRI	M.O.L. (Inches)	Life/ Hrs.	UPC	Pack
ST19													
S9967	4ST19/SPIRAL/LED/AMB/120V	4	ST19	E26	120	Amber	2000K	240	80	5 ¼	15K	045923099670	24/6
A19													
S9966	4A19/SPIRAL/LED/AMB/120V	4	A19	E26	120	Amber	2000K	220	80	4 1/16	15K	045923099663	24/6
G30													
S9968	4G30/SPIRAL/LED/AMB/120V	4	G30	E26	120	Amber	2000K	240	80	5 7/16	15K	045923099687	24/6
G40													
S9969	4G40/SPIRAL/LED/AMB/120V	4	G40	E26	120	Amber	2000K	240	80	6 ⅝	15K	045923099694	24/6
T9													
S9971	4T9/SPIRAL/LED/AMB/120V	4	T9	E26	120	Amber	2000K	240	80	7 3/16	15K	045923099717	24/6
B10													
S9970	2ETC/SPIRAL/LED/AMB/120V	2	B10	E26	120	Amber	2000K	90	80	3 ½	15K	045923099700	24/6

** See warranty for details.

Vintage filament LED lamps in HID envelopes

Classic, warm glow and ambiance on an impressive scale.

- Restaurants
- Hotels
- Retail
- Restoration projects
- Themed venues
- Uses only 4 Watts
- Impressive size and presence
- Perfect for pendant fixtures and hanging sockets
- Approved for totally enclosed fixtures**
- Unique LED spiral filament
- Omni-directional light source
- Dimmable
- Wet location
- 2150K
- T24, BT38, BT56 and PS52 shapes
- E26 base
- Long life—25,000 hours
- 3 Year warranty

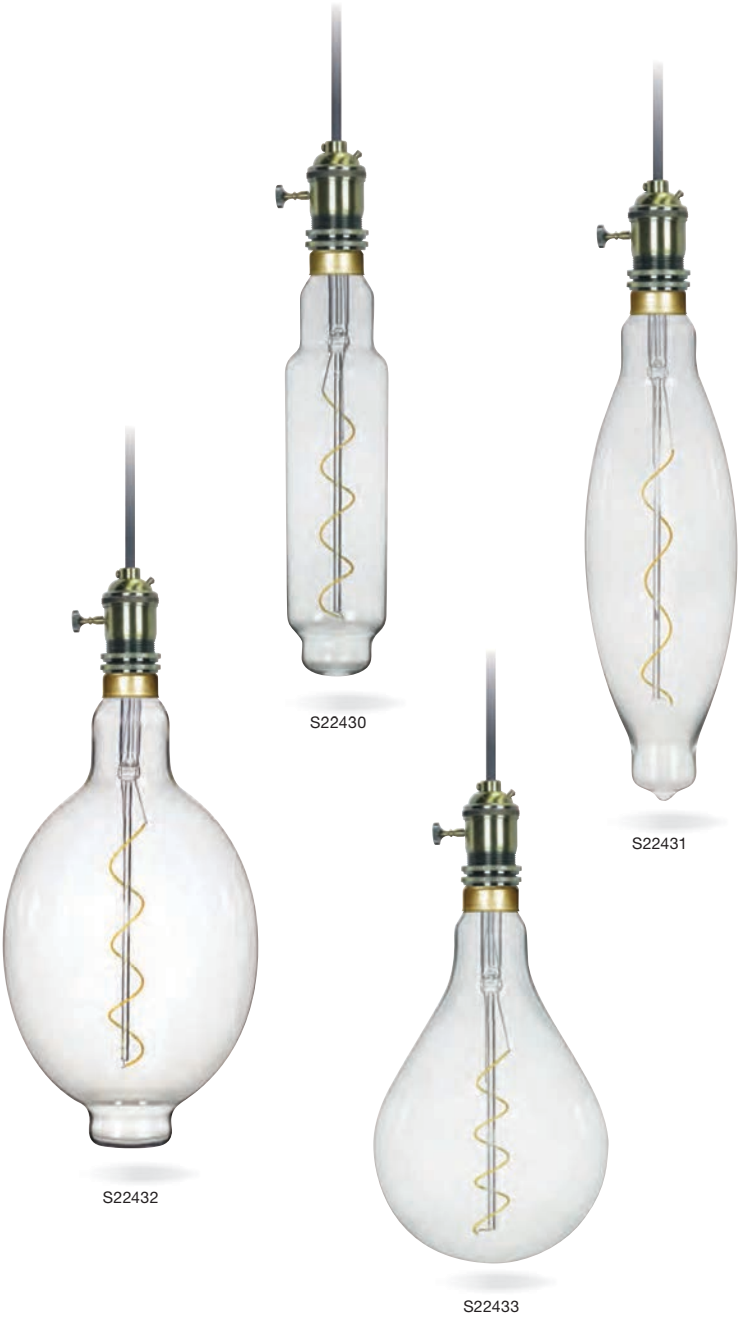

Spiral Filament LED Lamps in HID Envelopes

360° BEAM | DIMMABLE | WET LOCATION | ENCLOSED FIXTURE

Item Number	Lamp Description	W	V	Bulb Type	Base Type	CCT	Lm	Finish	M.O.L. (Inches)	Life/ Hrs.	UPC	Pack/ Master
S22430	4T24/LED/CLEAR/E26/VINTAGE/120V	4	120	T24	E26	2150K	200	Clear	13	25K	045923224300	12
S22431	4BT38/LED/CLEAR/E26/VINTAGE/120V	4	120	BT38	E26	2150K	200	Clear	16 ½	25K	045923224317	12
S22432	4BT56/LED/CLEAR/E26/VINTAGE/120V	4	120	BT56	E26	2150K	200	Clear	13 13/16	25K	045923224324	6
S22433	4PS52/LED/CLEAR/E26/VINTAGE/120V	4	120	PS52	E26	2150K	200	Clear	11 13/16	25K	045923224331	6

** See warranty for details.

Carded LED filament lamps

- General purpose
- Vintage style
- Miniatures
- Decorative
- Direct replacements for incandescent lamps
- LED replacements use 80% less energy
- Carded for peg board displays
- Tray packs for shelf merchandising
- Approved for totally enclosed fixtures**
- ENERGY STAR certified*
- Long life—15,000 hours
- 3 Year warranty

S21711, S8615 **A15** | S8616 **A19** | S8609, S21701, S21703, S21706 **C11** | S8610, S28614 **CA11** | S8611, S8612 **ST19**

Blister Carded

For boxed versions of these lamps, see pages 10-14.

Carded LED Lamps

360° BEAM | DIMMABLE | ENCLOSED FIXTURE | DAMP LOCATION | * ENERGY STAR

Item Number	Lamp Description	W	Bulb Type	Base	V	Finish	CCT	Lm	Life/ Hrs.	UPC	Cards
A15											
S8615*	4.5A15/CL/LED/E26/27K/ES/120V	4.5	A15	E26	120	Clear	2700K	450	15K	045923086151	12/1
S21710*	5.5A15/LED/2700K/E12/120V/2-CD	5.5	A15	E12	120	Clear	2700K	450	15K	045923217104	12-2pks
S21711*	5.5A15/LED/2700K/E26/120V/2-CD	5.5	A15	E26	120	Clear	2700K	450	15K	045923217111	12-2pks
A19											
S8616*	7A19/CL/LED/E26/27K/ES/120V	7	A19	E26	120	Clear	2700K	810	15K	045923086168	12/1
B11											
S21700*	2.5W CTC/LED/27K/CL/120V/2-CD	2.5	B11	E12	120	Clear	2700K	180	15K	045923217005	12-2pks
S21701*	2.5W ETC/LED/27K/CL/120V/2-CD	2.5	B11	E26	120	Clear	2700K	180	15K	045923217012	12-2pks
S21702*	4.5W CTC/LED/27K/CL/120V/2-CD	4.5	B11	E12	120	Clear	2700K	350	15K	045923217029	12-2pks
S21703*	4.5W ETC/LED/27K/CL/120V/2-CD	4.5	B11	E26	120	Clear	2700K	350	15K	045923217036	12-2pks
S21704*	4.5W CTF/LED/27K/CL/120V/2-CD	4.5	B11	E12	120	Frosted	2700K	330	15K	045923217043	12-2pks
S21705*	4.5W ETF/LED/27K/CL/120V/2-CD	4.5	B11	E26	120	Frosted	2700K	330	15K	045923217050	12-2pks
S21706*	5.5W CTC/LED/27K/CL/120V/2-CD	5.5	B11	E12	120	Clear	2700K	500	15K	045923217067	12-2pks
S21707*	5.5W ETC/LED/27K/CL/120V/2-CD	5.5	B11	E26	120	Clear	2700K	500	15K	045923217074	12-2pks
C11											
S28613*	4WCTC/LED/27K/CL/120V	4	C11	E12	120	Clear	2700K	350	15K	045923286131	12/1
S8609*	4.5WETC/LED/27K/120V	4.5	C11	E26	120	Clear	2700K	450	15K	045923086090	12/1
CA11											
S28614*	4WCFC/LED/27K/CL/120V	4	CA11	E12	120	Clear	2700K	350	15K	045923286148	12/1
S8610*	4.5WEFC/LED/27K/120V	4.5	CA11	E26	120	Clear	2700K	450	15K	045923086106	12/1
ST19											
S8612	4.5ST19/AMB/LED/E26/2K/120V	4.5	ST19	E26	120	Amber	2000K	380	15K	045923086120	12/1
S8611	6.5ST19/CL/LED/E26/27K/120V	6.5	ST19	E26	120	Clear	2700K	810	15K	045923086113	12/1

** See warranty for details.

Carded specialty LED lamps

- Sign bulbs
- Indicator
- Nightlights
- Decorative lamps
- Non-dimmable
- Direct replacements for incandescent & specialty lamps
- LED replacements use 80% less energy
- Wet location
- Long life—25,000 hours
- 3 Year warranty

S11

Decorative

A15

Carded Specialty LED Lamps

WET LOCATION

Item Number	Lamp Description	W	Base	V	Finish	CCT	Lm	M.O.L. (Inches)	Life/ Hrs.	UPC	Cards
S9150	1.4W A15/CL/LED/120V/CD	1.4	Med.	120	Clear	2700K	36	3 15/16	25K	045923091506	12/1
S9151	1.4W A15/FR/LED/120V/CD	1.4	Med.	120	Frost	2700K	45	3 15/16	25K	045923091513	12/1
S9152	1W CTC/LED/120V/CD	1.0	Cand.	120	Clear	2700K	25	3 9/16	25K	045923091520	12/1
S9153	1W CFC/LED/120V/CD	1.0	Cand.	120	Clear	2700K	25	3 7/8	25K	045923091537	12/1
S9154	1.4W ETC/LED/120V/CD	1.4	Med.	120	Clear	2700K	36	3 13/16	25K	045923091544	12/1
S9155	1W CTD/LED/CRYSTAL/120V/CD	1.0	Cand.	120	Clear	2700K	25	3 9/16	25K	045923091551	12/1
S9156	0.5W C7/CL/LED/120V/CD	0.5	Cand.	120	Clear	2700K	14	2 1/16	25K	045923091568	12/1
S9157	0.5W C7/WH/LED/120V/CD	0.5	Cand.	120	White	2700K	14	2 1/16	25K	045923091575	12/1
S9158	1.4W G16.5/CL/LED/120V/CD	1.4	Med.	120	Clear	2700K	36	2 3/4	25K	045923091582	12/1
S9159	1.4W G16.5/WH/LED/120V/CD	1.4	Med.	120	White	2700K	45	2 13/16	25K	045923091599	12/1
S9160	1.2W S11/CL/LED/120V/CD	1.2	Med.	120	Clear	2700K	32	2 5/16	25K	045923091605	12/1
S9161	1.2W S11/WH/LED/120V/CD	1.2	Med.	120	White	2700K	40	2 5/16	25K	045923091612	12/1
S9162	1.2W S11/BL/LED/120V/CD	1.2	Med.	120	Blue	—	—	2 5/16	25K	045923091629	12/1
S9163	1.2W S11/GR/LED/120V/CD	1.2	Med.	120	Green	—	—	2 5/16	25K	045923091636	12/1
S9164	1.2W S11/OR/LED/120V/CD	1.2	Med.	120	Orange	—	—	2 5/16	25K	045923091643	12/1
S9165	1.2W S11/RED/LED/120V/CD	1.2	Med.	120	Red	—	—	2 5/16	25K	045923091650	12/1
S9166	1.2W S11/Y/LED/120V/CD	1.2	Med.	120	Yellow	—	—	2 5/16	25K	045923091667	12/1
S9167	1.0W S11/CL/LED/E17/120V/CD	1.0	Inter.	120	Clear	2700K	28	2 5/16	25K	045923091674	12/1
S9168	1.0W S11/WH/LED/E17/120V/CD	1.0	Inter.	120	White	2700K	35	2 5/16	25K	045923091681	12/1
S9169	1.4W S14/Y/LED/120V/CD	1.4	Med.	120	Yellow	—	—	3 5/16	25K	045923091698	12/1
S9170	1.4W S14/RED/LED/120V/CD	1.4	Med.	120	Red	—	—	3 5/16	25K	045923091704	12/1
S9171	1.4W S14/GR/LED/120V/CD	1.4	Med.	120	Green	—	—	3 5/16	25K	045923091711	12/1
S9172	1.4W S14/BL/LED/120V/CD	1.4	Med.	120	Blue	—	—	3 5/16	25K	045923091728	12/1
S9173	1.4W S14/OR/LED/120V/CD	1.4	Med.	120	Orange	—	—	3 5/16	25K	045923091735	12/1
S9174	1.4W S14/CL/LED/120V/CD	1.4	Med.	120	Clear	2700K	36	3 5/16	25K	045923091742	12/1
S9175	1.4W S14/FR/LED/120V/CD	1.4	Med.	120	Frost	2700K	45	3 5/16	25K	045923091759	12/1
S9176	0.8W T6/FR/LED/120V/CD	0.8	Cand.	120	Frost	2700K	25	2 1/16	25K	045923091766	12/1
S9177	0.8W T6/CL/LED/120V/CD	0.8	Cand.	120	Clear	2700K	20	2 1/16	25K	045923091773	12/1

Satco-Escent LED lamps

- Decorative lighting
- Chandeliers
- Wall sconces
- Candle sticks
- Candelabras
- Direct replacements for incandescent lamps
- 2 Watt LED direct replacement for 20 Watt incandescent lamps
- 4 Watt LED direct replacement for 40 Watt incandescent lamps
- Unique satin-spun white or amber finish
- Dimmable
- Carded versions for peg board merchandising
- LED filament technology
- Approved for totally enclosed fixtures
- Long life—15,000 hours
- 3 Year warranty

Satin Finish

S23403, S22703

S23413, S22713

Amber Finish

S23407, S22707

S23412, S22712

Satco-Escent LED Lamps

DIMMABLE | ENCLOSED FIXTURE | DAMP LOCATION | c UL us LISTED

Item Number	Lamp Description	W	V	CRI	CCT	Lm	Finish	Life/ Hrs.	UPC	Case Pack
Boxed										
S23403	2C11/LED/SA/E26/27K/120V	2	120	80	2700K	120	Satin Spun	15K	045923234033	24
S23407	2C11/LED/A/E26/23K/120V	2	120	80	2300K	100	Amber Spun	15K	045923234071	24
S23413	4C15/LED/SA/E26/27K/120V	4	120	80	2700K	300	Satin Spun	15K	045923234132	24
S23412	4C15/LED/A/E26/23K/120V	4	120	80	2300K	240	Amber Spun	15K	045923234125	24
Carded										
S22703	2C11/LED/SA/E26/27K/120V/CD	2	120	80	2700K	120	Satin Spun	15K	045923227035	24
S22707	2C11/LED/A/E26/23K/120V/CD	2	120	80	2300K	100	Amber Spun	15K	045923227073	24
S22713	4C15/LED/SA/E26/27K/120V/CD	4	120	80	2700K	300	Satin Spun	15K	045923227134	24
S22712	4C15/LED/A/E26/23K/120V/CD	4	120	80	2300K	240	Amber Spun	15K	045923227127	24

40W replacement omni-directional LED A19 lamps

- **Direct replacement for 40 Watt incandescent lamps, uses only 6 Watts**
- Indoor residential and commercial lighting
- Innovative design–smooth heat sink design to resemble traditional incandescent lamp
- 2700K, 3000K, 3500K, 4000K & 5000K options
- Damp location
- Dimmable and non-dimmable options
- Approved for totally enclosed fixtures**
- Long life—up to 25,000 hours
- ENERGY STAR certified*
- 3 Year warranty—15,000 hours
- 5 Year warranty—25,000 hours

Beam Profile

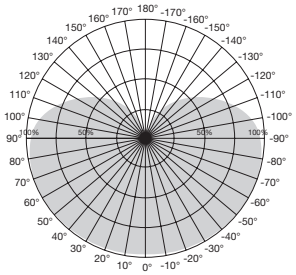

Beam Angle: 220°

40W Replacement Omni-Directional A19 LED Lamps

Item Number	Lamp Description	W	V	CRI	CCT	Lm	Bm	M.O.L. (Inches)	Life/ Hrs.	UPC	Pack
Dimmable											
S29830*	6A19/OMNI/220/LED/27K	6	120	80	2700K	480	220°	4 5/16	25K	045923298301	24/6
S29831*	6A19/OMNI/220/LED/30K	6	120	80	3000K	480	220°	4 5/16	25K	045923298318	24/6
S29832*	6A19/OMNI/220/LED/35K	6	120	80	3500K	480	220°	4 5/16	25K	045923298325	24/6
S29833*	6A19/OMNI/220/LED/40K	6	120	80	4000K	480	220°	4 5/16	25K	045923298332	24/6
S29834*	6A19/OMNI/220/LED/50K	6	120	80	5000K	480	220°	4 5/16	25K	045923298349	24/6
Non-Dimmable											
S9590*	6A19/LED/2700K/120V	6	120	80	2700K	480	220°	4 5/16	15K	045923095900	24/6
S9591*	6A19/LED/3000K/120V	6	120	80	3000K	480	220°	4 5/16	15K	045923095917	24/6
S9592*	6A19/LED/5000K/120V	6	120	80	5000K	480	220°	4 5/16	15K	045923095924	24/6
90 CRI—CEC/T20											
S8557	5.5A19/LED/27K/ND/120V/4PK	5.5	120	90	2700K	400	220°	4 3/16	10K	045923085574	12-4pks
S8558	5.5A19/LED/30K/ND/120V/4PK	5.5	120	90	3000K	400	220°	4 3/16	10K	045923085581	12-4pks
S8593	5.5A19/LED/40K/ND/120V/4PK	5.5	120	90	4000K	400	220°	4 3/16	10K	045923085932	12-4pks
S8594	5.5A19/LED/50K/ND/120V/4PK	5.5	120	90	5000K	400	220°	4 3/16	10K	045923085949	12-4pks

** See warranty for details. **4-pks Must be ordered in full cases only.**

60W replacement omni-directional LED A19 lamps

- **Direct replacement for 60 Watt incandescent lamps, uses only 8.5-10 Watts**
- Indoor residential and commercial lighting
- Innovative design–smooth heat sink design to resemble traditional incandescent lamp
- 2700K, 3000K, 3500K, 4000K & 5000K options
- Damp location
- Dimmable and non-dimmable options
- Approved for totally enclosed fixtures**
- E26 & GU24 base options
- CEC/T20 Compliant options available
- Long life—up to 25,000 hours
- ENERGY STAR certified*
- 3 Year warranty—15,000 hours
- 5 Year warranty—25,000 hours

Beam Profile

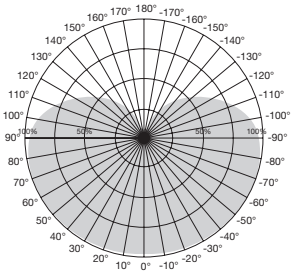

Beam Angle: 220°

60W Replacement Omni-Directional A19 LED Lamps

Item Number	Lamp Description	W	V	CRI	CCT	Lm	Bm	M.O.L. (Inches)	Life/ Hrs.	UPC	Pack
Dimmable											
S29835*	9.8A19/OMNI/220/LED/27K	9.8	120	80	2700K	800	220°	4 5/16	25K	045923298356	24/6
S29836*	9.8A19/OMNI/220/LED/30K	9.8	120	80	3000K	800	220°	4 5/16	25K	045923298363	24/6
S29837*	9.8A19/OMNI/220/LED/35K	9.8	120	80	3500K	800	220°	4 5/16	25K	045923298370	24/6
S29838*	9.8A19/OMNI/220/LED/40K	9.8	120	80	4000K	800	220°	4 5/16	25K	045923298387	24/6
S29839*	9.8A19/OMNI/220/LED/50K	9.8	120	80	5000K	800	220°	4 5/16	25K	045923298394	24/6
S29840*	9.8A19/OMNI/220/LED/27K/GU24	9.8	120	80	2700K	800	220°	4 5/16	25K	045923298400	24/6
S29841*	9.8A19/OMNI/220/LED/35K/GU24	9.8	120	80	3500K	800	220°	4 5/16	25K	045923298417	24/6
S29842*	9.8A19/OMNI/220/LED/40K/GU24	9.8	120	80	4000K	800	220°	4 5/16	25K	045923298424	24/6
90 CRI—CEC/T20—JA8-2016											
S9703*■	10A19/OMNI/LED/27K/90CRI	10	120	90	2700K	800	220°	4 5/16	25K	045923097034	24/6
S9704*■	10A19/OMNI/LED/30K/90CRI	10	120	90	3000K	800	220°	4 5/16	25K	045923097041	24/6
S8480	10A19/OMNI/LED/40K/90CRI	10	120	90	4000K	800	220°	4 5/16	25K	045923084805	24/6
S8481	10A19/OMNI/LED/50K/90CRI	10	120	90	5000K	800	220°	4 5/16	25K	045923084812	24/6
S9707*■	10A19/OMNI/LED/27K/90CRI/GU24	10	120	90	2700K	800	220°	4 5/16	25K	045923097072	24/6
S9708*■	10A19/OMNI/LED/30K/90CRI/GU24	10	120	90	3000K	800	220°	4 5/16	25K	045923097089	24/6
S8482	10A19/OMNI/LED/40K/90CRI/GU24	10	120	90	4000K	800	220°	4 5/16	25K	045923084829	24/6
Non-Dimmable											
S9593*	9.5A19/LED/2700K/120V	9.5	120	80	2700K	800	220°	4 5/16	15K	045923095931	24/6
S9594*	9.5A19/LED/3000K/120V	9.5	120	80	3000K	800	220°	4 5/16	15K	045923095948	24/6
S9595*	9.5A19/LED/5000K/120V	9.5	120	80	5000K	800	220°	4 5/16	15K	045923095955	24/6
120-277V											
S8914*	8.5A19/LED/27K /120-277V	8.5	120-277	80	2700K	800	220°	4 5/16	25K	045923089145	24/6
S8915*	8.5A19/LED/30K /120-277V	8.5	120-277	80	3000K	800	220°	4 5/16	25K	045923089152	24/6
S8916	8.5A19/LED/40K /120-277V	8.5	120-277	80	4000K	800	220°	4 5/16	25K	045923089169	24/6
S8920	8.5A19/LED/50K /120-277V	8.5	120-277	80	5000K	800	220°	4 5/16	25K	045923089206	24/6

** See warranty for details. ■ Also T24 compliant.

60W replacement LED A19 4-packs

Direct replacements for 60W incandescent lamps

- **60 Watt replacement uses only 9.5 Watts**
- Indoor residential and commercial lighting
- Direct replacement for 13 Watt screw-in CFLs
- 2700K, 3000K, 4000Kand 5000K options
- Damp location
- Approved for totally enclosed fixtures**
- Long life—15,000 hours
- ENERGY STAR certified*
- 3 Year warranty

Beam Profile

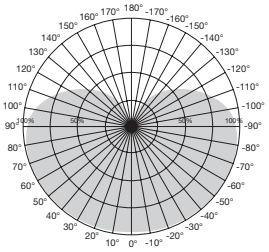

Beam Angle: 220°

60W Replacement Multi-Directional A19 LED Lamps 4-packs

Item Number	Lamp Description	W	V	CRI	CCT	Lm	Bm	M.O.L. (Inches)	Life/ Hrs.	UPC	Pack/ Master
Non-Dimmable											
S29596*	9.5A19/LED/27K/ND/120V/4PK	9.5	120	80	2700K	800	220°	4 5/16	15K	045923295966	12 - 4pks
S29589*	9.5A19/LED/30K/ND/120V/4PK	9.5	120	80	3000K	800	220°	4 5/16	15K	045923295898	12 - 4pks
S29558*	9.5A19/LED/40K/ND/120V/4PK	9.5	120	80	4000K	800	220°	4 5/16	15K	045923295584	12 - 4pks
S29597*	9.5A19/LED/50K/ND/120V/4PK	9.5	120	80	5000K	800	220°	4 5/16	15K	045923295973	12 - 4pks
90 CRI—CEC/T20											
S8560	10A19/LED/27K/ND/120V/4PK	10	120	90	2700K	750	220°	4 3/16	10K	045923085604	12-4pks
S8561	10A19/LED/30K/ND/120V/4PK	10	120	90	3000K	750	220°	4 3/16	10K	045923085611	12-4pks
S8562	10A19/LED/40K/ND/120V/4PK	10	120	90	4000K	750	220°	4 3/16	10K	045923085628	12-4pks
S8563	10A19/LED/50K/ND/120V/4PK	10	120	90	5000K	750	220°	4 3/16	10K	045923085635	12-4pks

** See warranty for details. **Must be ordered in full cases only.**

60W replacement omni-directional LED A19 display pack

- **Direct replacement for 60 Watt incandescent lamps, uses only 9.5 Watts**
- Indoor residential and commercial lighting
- Warm white 2700K
- Damp location
- Approved for totally enclosed fixtures**
- Long life—25,000 hours
- ENERGY STAR certified*
- 3 Year warranty

Sold 72 per display

DIMMABLE | ENCLOSED FIXTURE | DAMP LOCATION | * ENERGY STAR

9.5 Watt Omni-Directional 240˚ LED A19 Display Packs

Item Number	Lamp Description	W	V	CRI	CCT	Lm	Bm	M.O.L. (Inches)	Life/ Hrs.	UPC	Pack/ Master
Dimmable											
S29629*	9.5A19/LED/2700K/800L/120V/D	9.5	120	80	2700K	800	240°	4 ⅜	25K	045923096297	72

** See warranty for details. **Must be ordered in full cases only.**

60W replacement omni-directional LED A19 lamp 2-pack display

Great efficiency, even greater value – now in convenient 2-packs

- Indoor residential and commercial lighting
- Great for retail end caps and counter areas
- **60 Watt replacement uses only 9.8 Watts**
- Innovative design–smooth heat sink design to resemble traditional incandescent lamp
- 2700K
- Damp location
- Approved for totally enclosed fixtures**
- Long life—25,000 hours
- ENERGY STAR certified*
- 5 Year warranty

Sold 60 2-Packs per display

DIMMABLE | ENCLOSED FIXTURE | DAMP LOCATION | * ENERGY STAR

60W Replacement Omni-Directional A19 LED Lamp 2-Packs

Item Number	Lamp Description	W	V	CRI	CCT	Lm	Bm	M.O.L. (Inches)	Life/ Hrs.	UPC	Pack
Dimmable											
S29699*	9.8A19/LED/2700K/800L/2PK	9.8	120	80+	2700K	800	220°	4 3⁄16	25K	045923096990	60-2pks

** See warranty for details. **Must be ordered in full cases only.**

75W replacement omni-directional LED A19 lamps

- **Direct replacement for 75 Watt incandescent lamps, uses only 11-13 Watts**
- Indoor residential and commercial lighting
- Damp Location
- Approved for totally enclosed fixtures**
- E26 & GU24 base options
- Dimmable and non-dimmable options
- CEC/T20 Compliant options available
- Long life—25,000 hours
- ENERGY STAR certified*
- 3 Year warranty—15,000 hours
- 5 Year warranty—25,000 hours

Beam Profile

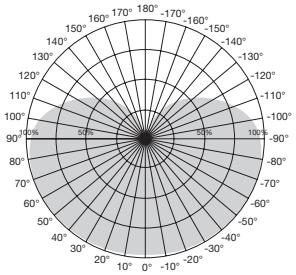

Beam Angle: 220°

75W Replacement Omni-Directional LED A19 Lamps

Item Number	Lamp Description	W	V	CRI	CCT	Lm	Bm	M.O.L. (Inches)	Life/ Hrs.	UPC	Pack
Dimmable											
S29810*	11A19/LED/2700K/1100L/120V/D	11	120	80	2700K	1100	220°	4 5/16	25K	045923298103	24/6
S29811*	11A19/LED/3000K/1100L/120V/D	11	120	80	3000K	1100	220°	4 5/16	25K	045923298110	24/6
S29812*	11A19/LED/4000K/1100L/120V/D	11	120	80	4000K	1100	220°	4 5/16	25K	045923298127	24/6
S29813*	11A19/LED/5000K/1100L/120V/D	11	120	80	5000K	1100	220°	4 5/16	25K	045923298134	24/6
S29814*	11A19/LED/2700K/120V/D/GU24	11	120	80	2700K	1100	220°	4 5/16	25K	045923298141	24/6
S29804*	11A19/LED/4000K/120V/D/GU24	11	120	80	4000K	1100	220°	4 5/16	25K	45923298042	24/6
90 CRI—CEC/T20											
S8650*■	13A19/LED/27K/90CRI	13	120	90	2700K	1100	220°	4 5/8	25K	045923086502	24/6
S8651*■	13A19/LED/30K/90CRI	13	120	90	3000K	1100	220°	4 5/8	25K	045923086519	24/6
S8484	13A19/LED/50K/90CRI	13	120	90	5000K	1100	220°	4 5/8	25K	045923084843	24/6
S8483	13A19/LED/40K/90CRI	13	120	90	4000K	1100	220°	4 5/8	25K	045923084836	24/6
S8485	13A19/LED/40K/90CRI/GU24	13	120	90	4000K	1100	220°	4 5/8	25K	045923084850	24/6
Non-Dimmable											
S28765*	11.5A19/LED/27K/ND/120V	11.5	120	80	2700K	1100	220°	4 5/16	15K	045923287657	24/6
S28766*	11.5A19/LED/30K/ND/120V	11.5	120	80	3000K	1100	220°	4 5/16	15K	045923287664	24/6
S28767*	11.5A19/LED/40K/ND/120V	11.5	120	80	4000K	1100	220°	4 5/16	15K	045923287671	24/6
S28768*	11.5A19/LED/50K/ND/120V	11.5	120	80	5000K	1100	220°	4 5/16	15K	045923287688	24/6

** See warranty for details. ■ Also T24 compliant.

75W replacement LED A19 4-packs

Direct replacements for 75W incandescent lamps

- **75 Watt replacement uses only 11.5 Watts**
- Indoor residential and commercial lighting
- Direct replacement for 18 Watt screw-in CFLs
- 2700K and 5000K options
- Damp location
- Approved for totally enclosed fixtures**
- Long life—15,000 hours
- ENERGY STAR certified*
- 3 Year warranty

Beam Profile

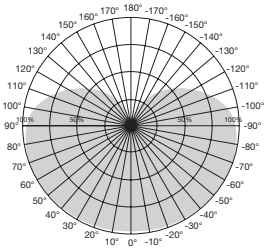

Beam Angle: 220°

75W Replacement A19 LED 4-packs

Item Number	Lamp Description	W	V	CRI	CCT	Lm	Bm	M.O.L. (Inches)	Life/ Hrs.	UPC	Pack/ Master
Non-Dimmable											
S28769*	11.5A19/LED/27K/ND/120V/4PK	11.5	120	80	2700K	1100	220°	4 5/16	15K	045923287695	12-4pks
S28770*	11.5A19/LED/50K/ND/120V/4PK	11.5	120	80	5000K	1100	220°	4 5/16	15K	045923287701	12-4pks
90 CRI—CEC/T20											
S8564	12.5A19/LED/27K/ND/120V/4PK	12.5	120	90	2700K	1050	220°	4 3/8	15K	045923085642	12-4pks
S8499	12.5A19/LED/30K/ND/120V/4PK	12.5	120	90	3000K	1050	220°	4 3/8	15K	045923084997	12-4pks
S8489	12.5A19/LED/40K/ND/120V/4PK	12.5	120	90	4000K	1050	220°	4 3/8	15K	045923084898	12-4pks
S8565	12.5A19/LED/50K/ND/120V/4PK	12.5	120	90	5000K	1050	220°	4 3/8	15K	045923085659	12-4pks

** See warranty for details. **Must be ordered in full cases only.**

100W replacement omni-directional LED A19, A21 lamps

- **Direct replacement for 100 Watt incandescent lamps, uses only 15-18 Watts**
- Indoor residential and commercial lighting
- Damp location
- Dimmable and non-dimmable options
- Approved for totally enclosed fixtures**
- CEC/T20 Compliant options available
- Long life—up to 25,000 hours
- ENERGY STAR certified*
- 3 Year warranty—15,000 hours
- 5 Year warranty—25,000 hours

Beam Profile

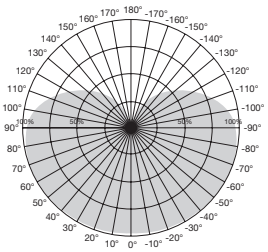

Beam Angle: 220°

100W Replacement Omni-Directional LED A19 Lamps

Item Number	Lamp Description	W	V	CRI	CCT	Lm	Bm	M.O.L. (Inches)	Life/ Hrs.	UPC	Pack
Dimmable											
S29815*	15A19/LED/2700K/1600L/120V/D	15	120	80	2700K	1600	220°	4 ⅝	25K	045923298158	24/6
S29816*	15A19/LED/3000K/1600L/120V/D	15	120	80	3000K	1600	220°	4 ⅝	25K	045923298165	24/6
S29817*	15A19/LED/4000K/1600L/120V/D	15	120	80	4000K	1600	220°	4 ⅝	25K	045923298172	24/6
S29818*	15A19/LED/5000K/1600L/120V/D	15	120	80	5000K	1600	220°	4 ⅝	25K	045923298189	24/6
S29819*	15A19/LED/27K/1600/120V/GU24	15	120	80	2700K	1600	220°	4 ½	25K	045923298196	24/6
S29805*	15A19/LED/40K/1600/120V/GU24	15	120	80	4000K	1600	220°	4 ½	25K	045923298059	24/6
90 CRI—CEC/T20											
S8652*■	18A21/LED/27K/90CRI	18	120	90	2700K	1600	220°	5 9/16	25K	045923086526	24/6
S8653*■	18A21/LED/30K/90CRI	18	120	90	3000K	1600	220°	5 9/16	25K	045923086533	24/6
S8486	18A21/LED/40K/90CRI	18	120	90	4000K	1600	220°	5 9/16	25K	045923084867	24/6
S8487	18A21/LED/50K/90CRI	18	120	90	5000K	1600	220°	5 9/16	25K	045923084874	24/6
S8488	18A21/LED/40K/90CRI/GU24	18	120	90	4000K	1600	220°	5 9/16	25K	045923084881	24/6
Non-Dimmable											
S28785*	15.5A19/LED/27K/ND/120V	15.5	120	80	2700K	1600	220°	4 ⅝	15K	045923287855	24/6
S28786*	15.5A19/LED/30K/ND/120V	15.5	120	80	3000K	1600	220°	4 ⅝	15K	045923287862	24/6
S28787*	15.5A19/LED/40K/ND/120V	15.5	120	80	4000K	1600	220°	4 ⅝	15K	045923287879	24/6
S28788*	15.5A19/LED/50K/ND/120V	15.5	120	80	5000K	1600	220°	4 ⅝	15K	045923287886	24/6

** See warranty for details. ■ Also T24 compliant.

100W replacement LED A19 4-packs

Direct replacements for 100W incandescent lamps

- **100 Watt replacement, uses only 15.5 Watts**
- Indoor residential and commercial lighting
- Direct replacement for 13, 18 & 23W screw-in CFLs
- 2700K and 5000K options
- Damp location
- Approved for totally enclosed fixtures**
- Long life—up to 25,000 hours
- ENERGY STAR certified* • 3 Year warranty

Beam Profile

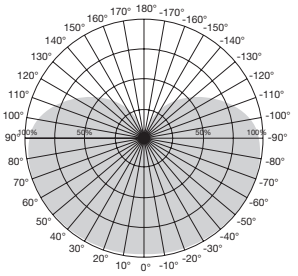

Beam Angle: 220°

ENCLOSED FIXTURE | DAMP LOCATION | c UL us LISTED | * ENERGY STAR

100W Replacement LED A19 4-packs

Item Number	Lamp Description	W	V	CRI	CCT	Lm	Bm	M.O.L. (Inches)	Life/ Hrs.	UPC	Pack/ Master
Non-Dimmable											
S28789*	15.5A19/LED/27K/ND/120V/4PK	15.5	120	80	2700K	1600	220°	4 5/8	15K	045923287893	12-4pks
S28790*	15.5A19/LED/50K/ND/120V/4PK	15.5	120	80	5000K	1600	220°	4 5/8	15K	045923287909	12-4pks
90 CRI—CEC/T20											
S8566	15.5A19/LED/27K/ND/120V/4PK	15.5	120	90	2700K	1490	220°	4 5/8	15K	045923085666	12-4pks
S8567	15.5A19/LED/30K/ND/120V/4PK	15.5	120	90	3000K	1490	220°	4 5/8	15K	045923085673	12-4pks
S8490	15.5A19/LED/40K/ND/120V/4PK	15.5	120	90	4000K	1490	220°	4 5/8	15K	045923084904	12-4pks
S8568	15.5A19/LED/50K/ND/120V/4PK	15.5	120	90	5000K	1490	220°	4 5/8	15K	045923085680	12-4pks

** See warranty for details. **Must be ordered in full cases only.**

125W replacement omni-directional 120-277V LED A21 lamps

- **Direct replacement for 125 Watt incandescent & 25 Watt CFL lamps, uses only 19 Watts**
- Indoor residential and commercial lighting
- Down lighting • Display lighting
- Accent lighting
- 2700K, 3000K, 4000K and 5000K options
- Damp location • Approved for totally enclosed fixtures**
- c-UL-us listed • Long life—25,000 hours
- ENERGY STAR certified*
- 5 Year warranty

Beam Profile

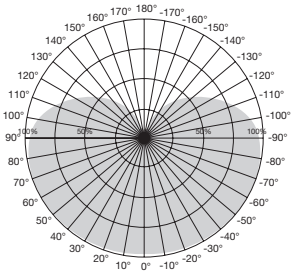

Beam Angle: 220°

ENCLOSED FIXTURE | DAMP LOCATION | c UL us LISTED | * ENERGY STAR

125W Replacement Omni-Directional 120-277V LED A21 Lamps

Item Number	Lamp Description	W	V	CRI	CCT	Lm	Bm	M.O.L. (Inches)	Life/ Hrs.	UPC	Pack
S8646*	19A21/LED/27K/120-277V	19	120-277	80	2700K	2000	220°	5 9/16	25K	045923086465	24
S8647*	19A21/LED/30K/120-277V	19	120-277	80	3000K	2000	220°	5 9/16	25K	045923086472	24
S8648	19A21/LED/40K/120-277V	19	120-277	80	4000K	2000	220°	5 9/16	25K	045923086489	24
S8649	19A21/LED/50K/120-277V	19	120-277	80	5000K	2000	220°	5 9/16	25K	045923086496	24

** See warranty for details.

5W LED decorative flame lamp

- Outdoor fixtures
- Wall sconces
- Faux fireplaces
- Holiday lighting
- Any decorative application
- Base up or base down operation
- 120-277V
- Medium base
- Long life—20,000 hours
- c-UL-us listed
- 2 Year warranty

Multi-function options-controlled by quickly turning wall switch on-off-on

- Flame mode
- Auto slow-dim cycle
- Constant warm glow 1300K

5W LED Decorative Flame Lamps

360° BEAM 20,000 HOURS c UL us LISTED

Item Number	Lamp Description	W	Bulb Type	Base	V	CCT	M.O.L. (Inches)	Life/ Hrs.	UPC	Pack
S9806	5W/LED/FLAME BULB/120V	5	T10	E26	120-277	1300K	4 ½	20K	045923098062	24

Omni-directional 3-way LED lamps

- **Direct replacement for 30/70/100W 3-Way incandescent lamps, uses only 3/9/12W**
- **Direct replacement for 50/100/150W 3-Way incandescent lamps uses only 5/15/21W**
- Indoor residential and commercial lighting
- 220° Omni-directional
- 2700K, 3000K, 4000K and 5000K options
- Damp location rated
- Approved for totally enclosed fixtures**
- ENERGY STAR certified*
- Long life—25,000 hours
- 3 Year warranty

3/9/12 5/15/21

Beam Profile

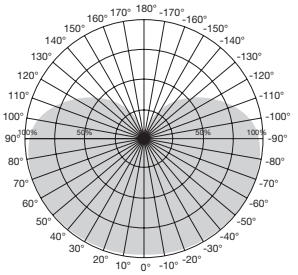

Beam Angle: 220°

Omni-Directional 3-Way LED Lamps

Item Number	Lamp Description	W	V	CRI	CCT	Lumens	Bm	M.O.L. (Inches)	Life/ Hrs.	UPC	Pack
30/70/100W 3-Way											
S9316*	3/9/12A19/3WAY LED/2700K/120V	3/9/12	120	80	2700K	280/950/1200	220°	4 5/8	25K	045923093166	24/6
S9317*	3/9/12A19/3WAY LED/3000K/120V	3/9/12	120	80	3000K	280/950/1200	220°	4 5/8	25K	045923093173	24/6
S9318	3/9/12A19/3WAY LED/4000K/120V	3/9/12	120	80	4000K	280/950/1200	220°	4 5/8	25K	045923093180	24/6
S9319	3/9/12A19/3WAY LED/5000K/120V	3/9/12	120	80	5000K	280/950/1200	220°	4 5/8	25K	045923093197	24/6
90 CRI—CEC/T20											
S8570*	3/9/12A19/3WAY LED/27K/120V	3/9/12	120	90	2700K	1050	220°	4 5/8	25K	045923085703	24/6
S8571*	3/9/12A19/3WAY LED/30K/120V	3/9/12	120	90	3000K	1050	220°	4 5/8	25K	045923085710	24/6
** See warranty for details.											
50/100/150W 3-Way											
S8542*	5/15/21A21/3-WAY LED/2700K/120V	5/15/21	120	80	2700K	600/1600/2150	220°	5 9/16	25K	045923085420	24/6
S8543*	5/15/21A21/3-WAY LED/3000K/120V	5/15/21	120	80	3000K	600/1600/2150	220°	5 9/16	25K	045923085437	24/6
S8544	5/15/21A21/3-WAY LED/4000K/120V	5/15/21	120	80	4000K	600/1600/2150	220°	5 9/16	25K	045923085444	24/6
S8545	5/15/21A21/3-WAY LED/5000K/120V	5/15/21	120	80	5000K	600/1600/2150	220°	5 9/16	25K	045923085451	24/6
** See warranty for details.											

40 & 60W Candelabra base replacement LED A19 lamps

- **Direct replacements for 9 and 13 Watt candelabra base CFL**
- Indoor residential and commercial lighting
- Display lighting
- Accent lighting
- Dimmable
- 2700K, 3000K, 4000K and 5000K options
- Damp location
- Approved for totally enclosed fixtures**
- Long life—25,000 hours
- 5 Year warranty**

Beam Profile

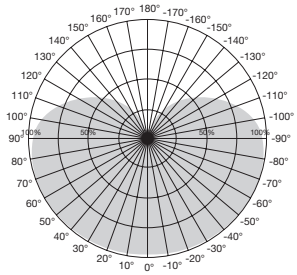

Beam Angle: 220°

Candelabra Base A19 LED Lamps

DIMMABLE | ENCLOSED FIXTURE | DAMP LOCATION | * ENERGY STAR

Item Number	Lamp Description	W	V	CRI	CCT	Lm	Bm	M.O.L. (Inches)	Life/ Hrs.	UPC	Pack/ Master
Dimmable											
S21800*	6A19/OMNI/220/LED/E12/27K	6	120	80	2700K	480	220°	4 5/16	25K	045923218002	24/6
S21801*	6A19/OMNI/220/LED/E12/30K	6	120	80	3000K	480	220°	4 5/16	25K	045923218019	24/6
S21802	6A19/OMNI/220/LED/E12/40K	6	120	80	4000K	480	220°	4 5/16	25K	045923218026	24/6
S21803	6A19/OMNI/220/LED/E12/50K	6	120	80	5000K	480	220°	4 5/16	25K	045923218033	24/6
S21804*	9.8A19/OMNI/220/LED/E12/27K	9.8	120	80	2700K	800	220°	4 5/16	25K	045923218040	24/6
S21805*	9.8A19/OMNI/220/LED/E12/30K	9.8	120	80	3000K	800	220°	4 5/16	25K	045923218057	24/6
S21806	9.8A19/OMNI/220/LED/E12/40K	9.8	120	80	4000K	800	220°	4 5/16	25K	045923218064	24/6
S21807	9.8A19/OMNI/220/LED/E12/50K	9.8	120	80	5000K	800	220°	4 5/16	25K	045923218071	24/6

** See warranty for details.

LED A19 colors

- **Direct replacement for 60 Watt incandescent lamps, uses only 8 Watts**
- Indoor residential and commercial lighting
- Party bulbs
- Display lighting
- Accent lighting
- Ceramic-lined glass envelopes
- 360˚ Beam angle
- Damp location
- Approved for totally enclosed fixtures**
- Long life–15,000 hours
- 3 Year warranty

Colors for a reason
- Blue—in support of law enforcement/ Autism awareness
- Green—in support of veterans
- Yellow—bug lights
- Pink—Breast cancer awareness

Beam Profile

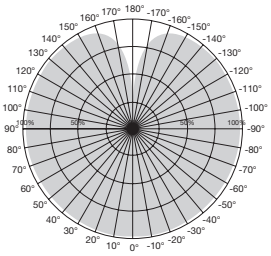

Beam Angle: 360°

Colored LED Lamps

DIMMABLE | 360° BEAM | DAMP LOCATION | ENCLOSED FIXTURE

Item Number	Lamp Description	W	V	CCT	Bm	M.O.L. (Inches)	Life/ Hrs.	UPC	Pk./ Mstr.
S14984	8A19/RED/LED/E26/120V	8	120	Red	360°	4 1/8	15K	045923149849	24/6
S14985	8A19/BLUE/LED/E26/120V	8	120	Blue	360°	4 1/8	15K	045923149856	24/6
S14986	8A19/GREEN/LED/E26/120V	8	120	Green	360°	4 1/8	15K	045923149863	24/6
S14987	8A19/YELLOW/E26/120V	8	120	Yellow	360°	4 1/8	15K	045923149870	24/6
S14988	8A19/ORANGE/LED/E26/120V	8	120	Orange	360°	4 1/8	15K	045923149887	24/6
S14989	8A19/PINK/LED/E26/120V	8	120	Pink	360°	4 1/8	15K	045923149894	24/6

40W replacement omni-directional LED lamps

- **Direct replacement for 40 Watt A15 incandescent lamps, uses only 5.5 Watts**
- Indoor residential and commercial lighting
- Dimmable
- 2700K, 3000K, 4000K and 5000K options
- Damp location rated
- Approved for totally enclosed fixtures**
- Long life—25,000 hours
- ENERGY STAR certified*
- 3 Year warranty

E17 Base

E26 Base

Beam Profile

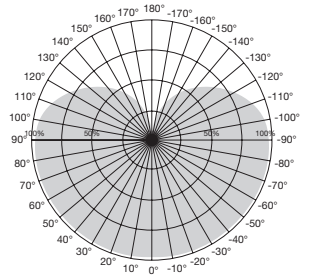

Beam Angle: 230°

40W Replacement Omni-Directional LED Lamps

Item Number	Lamp Description	W	V	CRI	CCT	Lm	Bm	M.O.L. (Inches)	Life/ Hrs.	UPC	Pack/ Master
S9030*	5.5A15/LED/2700K/120V	5.5	120	80	2700K	450	230°	3 7/16	25K	045923090301	24/6
S9031*	5.5A15/LED/3000K/120V	5.5	120	80	3000K	450	230°	3 7/16	25K	045923090318	24/6
S9032	5.5A15/LED/4000K/120V	5.5	120	80	4000K	450	230°	3 7/16	25K	045923090325	24/6
S9033	5.5A15/LED/5000K/120V	5.5	120	80	5000K	450	230°	3 7/16	25K	045923090332	24/6
S9064	5.5A15/LED/2700K/E17/120V	5.5	120	80	2700K	450	230°	3 7/16	25K	045923090646	24/6
S9065	5.5A15/LED/3000K/E17/120V	5.5	120	80	3000K	450	230°	3 ½	25K	045923090653	24/6
S9067	5.5A15/LED/4000K/E17/120V	5.5	120	80	4000K	450	230°	3 ½	25K	045923090677	24/6
S9068	5.5A15/LED/5000K/E17/120V	5.5	120	80	5000K	450	230°	3 ½	25K	045923090684	24/6
90 CRI—CEC/T20											
S8572	5A15/LED/27K/120V	5	120	90	2700K	450	230°	3 15/32	25K	045923085727	24/6
S8573	5A15/LED/30K/120V	5	120	90	3000K	450	230°	3 15/32	25K	045923085734	24/6

** See warranty for details.

Low voltage 9 Watt LED A19 lamps

- **60 Watt incandescent replacement, uses only 9 Watts**
- RVs and campers
- Marine applications
- High efficiency—reduces drain on battery
- 12-34V DC
- 800 Lumens
- Long life—25,000 hours
- 3 Year warranty

Beam Profile

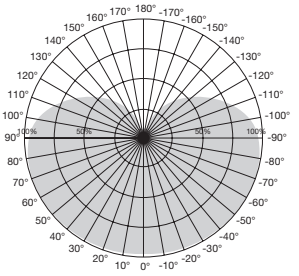

Beam Angle: 220°

Low Voltage 9 Watt LED A19 Lamps

Item Number	Lamp Description	W	VDC	Base Type	CCT	CRI	M.O.L. (Inches)	Lm	Life/ Hrs.	UPC	Pack/ Master
S15011	9A19/LED/12-34VDC/827	9	12-34	E26	2700K	80	4 3/8	800	25K	045923150111	24/6
S15012	9A19/LED/12-34VDC/850	9	12-34	E26	5000K	80	4 3/8	800	25K	045923150128	24/6

Decorative LED lamps

- **25W candle replacement uses only 2.8 Watts**
- **40W candle replacement uses only 4.5 Watts**
- Accent lighting • Pendant lighting
- Dimmable • Damp location
- Approved for totally enclosed fixtures**
- Long life—25,000 hours
- ENERGY STAR certified*
- 3 Year warranty

S8951, S8952, S8950, S9618 | S8953 | S9200, S9201, S9202, S9203, S9619

Candle Beam Profile

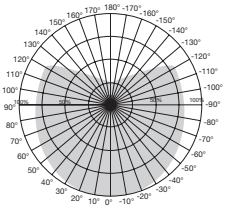

Beam Angle: 280°

Globe Beam Profile

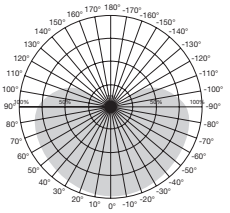

Beam Angle: 175°

Decorative LED Lamps

Item Number	Lamp Description	W	V	CRI	CCT	Lm	Bm	M.O.L. (Inches)	Life/ Hrs.	UPC	Pack
S8950	2.8CTC/LED/3000K/E12/120V	2.8	120	80	3000K	165	280°	3 ¾	25K	045923089503	12/1
S8951*	4.5CTC/LED/2700K/E12/120V	4.5	120	80	2700K	300	280°	3 ¾	25K	045923089510	12/1
S8952*	4.5CTC/LED/3000K/E12/120V	4.5	120	80	3000K	300	280°	3 ¾	25K	045923089527	12/1
S8953*	4.5ETC/LED/3000K/E26/120V	4.5	120	80	3000K	300	280°	3 ¾	25K	045923089534	12/1
90 CRI—CEC/T20											
S9618*■	5CTC/LED/27K/E12/120V	5	120	90	2700K	325	280°	3 ¾	25K	045923096181	12/1
S8574	5CTC/LED/30K/E12/120V	5	120	90	3000K	325	280°	3 ¾	25K	045923085741	12/1
S8575	5CTC/LED/30K/E26/120V	5	120	90	3000K	325	280°	3 ¾	25K	045923085758	12/1
S9200*	6G25/LED/2700K/E26	6	120	80	2700K	450	175°	4 ¼	25K	045923090523	24/6
S9201*	6G25/LED/3000K/E26	6	120	80	3000K	450	175°	4 ¼	25K	045923090530	24/6
S9202	6G25/LED/4000K/E26	6	120	80	4000K	450	175°	4 ¼	25K	045923090691	24/6
S9203	6G25/LED/5000K/E26	6	120	80	5000K	450	175°	4 ¼	25K	045923092039	24/6
90 CRI—CEC/T20											
S9619*■	6G25/LED/27K/E26/120V	6	120	90	2700K	390	175°	4 ¼	25K	045923096198	24/6
S8576	6G25/LED/30K/E26/120V	6	120	90	3000K	390	175°	4 ¼	25K	045923085765	24/6
S8595	6G25/LED/50K/E26/120V	6	120	90	5000K	390	175°	4 ¼	25K	045923085956	24/6

** See warranty for details. ■ Also T24 compliant.

LED Linear T10 lamps

- **Energy efficient alternative to traditional 35W, 60W and 150W T10 linear incandescent lamps, use only 5W, 7W and 13W**
- Direct replacements for LN35, LN60 and LN150 lamps
- Full PC material (bulb opaque)
- Simple installation—no ballasts or transformers required
- S14S Base
- Dimmable
- 2700K
- Long life—30,000 hours
- 5 Year warranty

LED T10 Lamps

Item Number	Lamp Description	W	CRI	Base Type	CCT	Lm	M.O.L." (Nominal)	Life/ Hrs.	UPC	Pack
S8191	5T10/LED/27K/S14S	5	80	S14s	2700K	330	11 13/16	30K	045923081910	12
S8189	7T10/LED/27K/S14S	7	80	S14s	2700K	500	18 11/16	30K	045923081897	12
S8190	13T10/LED/27K/S14S	13	80	S14s	2700K	1000	39 3/8	30K	045923081903	12

Satco 6.5W R20 LED reflectors 80 & 90 CRI

Beam Profile

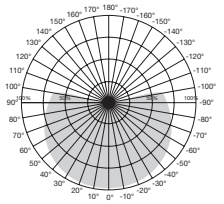

Beam Angle: 107°

- **50R20 replacement uses only 6.5 Watts**
- Indoor residential and commercial lighting
- Dimmable • Damp location • Long life—25,000 hours
- ENERGY STAR certified*
- 3 Year warranty

6.5W R20 LED Reflectors

Item Number	Lamp Description	W	V	CRI	CCT	Lm	Bulb Type	M.O.L. (Inches)	Life/ Hrs.	UPC	Pack
S9630*	6.5R20/LED/2700K/525L/120V	6.5	120	80	2700K	525	R20	3 15/16	25K	045923096303	24/6
S9631*	6.5R20/LED/3000K/525L/120V	6.5	120	80	3000K	525	R20	3 15/16	25K	045923096310	24/6
S9632*	6.5R20/LED/4000K/525L/120V	6.5	120	80	4000K	525	R20	3 15/16	25K	045923096327	24/6
S9633*	6.5R20/LED/5000K/525L/120V	6.5	120	80	5000K	525	R20	3 15/16	25K	045923096334	24/6
90 CRI—CEC/T20											
S9614*■	6.5R20/LED/27K/450L/90CRI	6.5	120	90	2700K	450	R20	3 15/16	25K	045923096143	24/6
S8577■	6.5R20/LED/30K/450L/90CRI	6.5	120	90	3000K	450	R20	3 15/16	25K	045923085772	24/6
S8491	6.5R20/LED/40K/450L/90CRI	6.5	120	90	4000K	450	R20	3 15/16	25K	045923084911	24/6

■ Also T24 compliant.

Satco 9.5W BR30 LED reflectors 80 & 90 CRI

Beam Profile

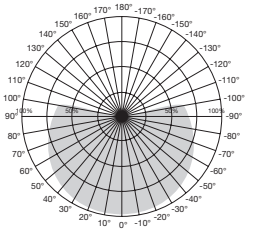

Beam Angle: 105°

- **65BR30 replacement uses only 9.5 Watts**
- Indoor residential and commercial lighting
- Display lighting
- New one piece, lighter weight design
- Dimmable
- Long life—25,000 hours
- ENERGY STAR certified*
- 3 Year warranty

9.5W BR30 LED Reflectors

Item Number	Lamp Description	W	V	CRI	CCT	Lm	Bulb Type	M.O.L. (Inches)	Life/ Hrs.	UPC	Pack
S9620*	9.5BR30/LED/2700K/750L/120V/D	9.5	120	80	2700K	750	BR30	5 3/16	25K	045923096204	12/6
S9621*	9.5BR30/LED/3000K/750L/120V/D	9.5	120	80	3000K	750	BR30	5 3/16	25K	045923096211	12/6
S9622*	9.5BR30/LED/4000K/750L/120V/D	9.5	120	80	4000K	750	BR30	5 3/16	25K	045923096228	12/6
S9623*	9.5BR30/LED/5000K/750L/120V/D	9.5	120	80	5000K	750	BR30	5 3/16	25K	045923096235	12/6
S9624*	9.5BR30/LED/2700K/GU24/750L/120V	9.5	120	80	2700K	750	BR30	4 15/16	25K	045923096242	12/6
S9627	9.5BR30/LED/3000K/GU24/750L/120V	9.5	120	80	3000K	750	BR30	4 15/16	25K	045923096273	12/6
90 CRI—CEC/T20											
S9625*■	9.5BR30/LED/27K/650L/120V/D	9.5	120	90	2700K	650	BR30	5 3/16	25K	045923096259	12/6
S8578	9.5BR30/LED/30K/650L/120V/D	9.5	120	90	3000K	650	BR30	5 3/16	25K	045923085789	12/6
S8492	9.5BR30/LED/40K/650L/120V/D	9.5	120	90	4000K	650	BR30	5 3/16	25K	045923084928	12/6
S8596	9.5BR30/LED/50K/650L/120V/D	9.5	120	90	5000K	650	BR30	5 3/16	25K	045923085963	12/6
S9626*■	9.5BR30/LED/27K/GU24/650L/120V/D	9.5	120	90	2700K	650	BR30	4 15/16	25K	045923096266	12/6
S8579	9.5BR30/LED/30K/GU24/650L/120V/D	9.5	120	90	3000K	650	BR30	4 15/16	25K	045923085796	12/6

■ Also T24 compliant.

Satco 10W BR30 LED reflector display packs and 6 packs

- **65W BR30 replacement uses only 10 Watts**
- Indoor residential and commercial lighting
- 2700K
- Dimmable
- Damp location
- Long life—25,000 hours
- ENERGY STAR certified*
- 3 Year warranty

6 pack

Display Pack

10W BR30 LED Reflector Display Packs

Item Number	Lamp Description	W	V	CRI	CCT	Lm	M.O.L. (Inches)	Life/ Hrs.	UPC	Pack/ Master
S29628*	10BR30/LED/2700K/700L/120V/D	10	120	80	2700K	700	5 ⅛	25K	045923296284	48
S9022*	10BR30/LED/3000K/700/120V/6PK	10	120	80	3000K	700	5 ⅛	25K	045923090226	4-6pks

Must be ordered in full cases only.

Satco 8W BR30 LED 2-pack display

Great efficiency, even greater value – now in convenient 2-packs

- **65 Watt replacement uses only 8 Watts**
- Indoor residential and commercial lighting
- Great for retail end caps or counter areas
- 2700K
- Dimmable*
- Damp location
- High efficiency
- Long life—25,000 hours
- ENERGY STAR certified*
- 3 Year warranty

Sold 24 2-Packs per display

8W BR30 LED 2-Pack Display

Item Number	Lamp Description	W	V	CRI	CCT	Lm	Bm	M.O.L. (Inches)	Life/ Hrs.	UPC	Pack/ Master
S9698*	8BR30/LED/2700K/650L/2PK	8	120	80+	2700K	650	105°	5 3⁄16	25K	045923096983	24-2pks

Must be ordered in full cases only.

Satco 11.5W & 16.5W BR40 LED reflectors 80 & 90 CRI

- **65W BR40 replacement uses only 11.5 Watts**
- **85W BR40 replacement uses only 16.5 Watts**
- Indoor residential and commercial lighting
- Dimmable
- Damp location
- Long life—25,000 hours
- ENERGY STAR certified*
- 3 Year warranty

Beam Profile

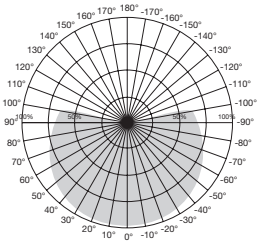

Beam Angle: 103°

11.5W & 16.5W BR40 LED Reflectors 80 & 90 CRI

Item Number	Lamp Description	W	V	CRI	CCT	Lm	Bulb Type	M.O.L. (Inches)	Life/ Hrs.	UPC	Pack
S9634*	11.5BR40/LED/2700K/940L/120V	11.5	120	80	2700K	940	BR40	6 7/16	25K	045923096341	12/6
S9635*	11.5BR40/LED/3000K/940L/120V	11.5	120	80	3000K	940	BR40	6 7/16	25K	045923096358	12/6
S9636*	11.5BR40/LED/4000K/940L/120V	11.5	120	80	4000K	940	BR40	6 7/16	25K	045923096365	12/6
S9637*	11.5BR40/LED/5000K/940L/120V	11.5	120	80	5000K	940	BR40	6 7/16	25K	045923096372	12/6
S9638*	16.5BR40/LED/2700K/1200L/120V	16.5	120	80	2700K	1200	BR40	6 7/16	25K	045923096389	12/6
S9639*	16.5BR40/LED/3000K/1200L/120V	16.5	120	80	3000K	1200	BR40	6 7/16	25K	045923096396	12/6
S9640*	16.5BR40/LED/4000K/1200L/120V	16.5	120	80	4000K	1200	BR40	6 7/16	25K	045923096402	12/6
S9641*	16.5BR40/LED/5000K/1200L/120V	16.5	120	80	5000K	1200	BR40	6 7/16	25K	045923096419	12/6
90 CRI—CEC/T20											
S9615*■	16.5BR40/LED/27K/1075L	16.5	120	90	2700K	1075	BR40	6 7/16	25K	045923096150	12/6
S8580	16.5BR40/LED/30K/1075L	16.5	120	90	3000K	1075	BR40	6 7/16	25K	045923085802	12/6
S8493	16.5BR40/LED/40K/1075L	16.5	120	90	4000K	1075	BR40	6 7/16	25K	045923084935	12/6
S8597	16.5BR40/LED/50K/1075L	16.5	120	90	5000K	1075	BR40	6 7/16	25K	045923085970	12/6

■ Also T24 compliant.

Satco 7W LED PAR20 - amber

- Solid state LED lighting
- Reflector replacement lamp
- Long life—25,000 hours
- Amber color - 620nm - Sea turtle friendly

7W LED PAR20 - Amber

Item Number	Lamp Description	W	V	CCT	Lm	Bm	M.O.L. (Inches)	Life/ Hrs.	UPC	Pack/ Master
S29188	7PAR20/LED/40'/AMBER/120V	7	120	AMBER	340	40°	3 1/4	25K	045923291883	24/6

Familiar appearance. High efficiency. Direct replacements.

Satco LED PAR Lamps. LED efficiency, indoors or out.

Satco LED PAR lamps have the familiar look of the Halogen PAR lamps they replace, but deliver the high efficiency that only LEDs can. With the silvered reflector, traditional lens pattern, and exact dimensions of older Halogen PARs, Satco LED PARs represent an exact replacement. The only difference will be the greatly reduced energy and maintenance costs!

7W LED PAR20 lamps

- **50W PAR20 replacement uses only 7 Watts**
- Down lighting
- Track lighting
- Dimmable
- IP65 Listed - indoor/outdoor
- Approved for totally enclosed fixtures**
- Long life—25,000 hours
- ENERGY STAR certified*
- 3 Year warranty

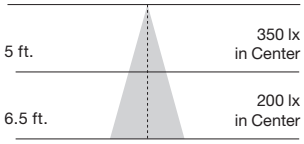

Beam Angle : 25°

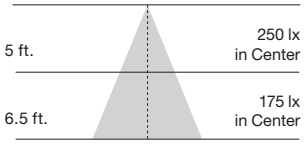

Beam Angle : 40°

DIMMABLE | ENCLOSED FIXTURE | WET LOCATION | * ENERGY STAR

LED PAR Lamps

Item Number	Lamp Description	W	V	CRI	CCT	Color Temp.	Lm	Bm	M.O.L. (Inches)	Life/ Hrs.	UPC	Pack
LED PAR20 - Replaces 50W												
S9400*	7PAR20/LED/25'/2700K/120V/SP	7	120	80	2700K	Warm White	525	25°	3 1/16	25K	045923094002	24/6
S9401*	7PAR20/LED/25'/3000K/120V/SP	7	120	80	3000K	Soft White	525	25°	3 1/16	25K	045923094019	24/6
S9402*	7PAR20/LED/25'/3500K/120V/SP	7	120	80	3500K	Neutral White	525	25°	3 1/16	25K	045923094026	24/6
S9403*	7PAR20/LED/25'/4000K/120V/SP	7	120	80	4000K	Cool White	525	25°	3 1/16	25K	045923094033	24/6
S9404*	7PAR20/LED/25'/5000K/120V/SP	7	120	80	5000K	Natural Light	525	25°	3 1/16	25K	045923094040	24/6
S9405*	7PAR20/LED/40'/2700K/120V/FL	7	120	80	2700K	Warm White	525	40°	3 1/16	25K	045923094057	24/6
S9406*	7PAR20/LED/40'/3000K/120V/FL	7	120	80	3000K	Soft White	525	40°	3 1/16	25K	045923094064	24/6
S9407*	7PAR20/LED/40'/3500K/120V/FL	7	120	80	3500K	Neutral White	525	40°	3 1/16	25K	045923094071	24/6
S9408*	7PAR20/LED/40'/4000K/120V/FL	7	120	80	4000K	Cool White	525	40°	3 1/16	25K	045923094088	24/6
S9409*	7PAR20/LED/40'/5000K/120V/FL	7	120	80	5000K	Natural Light	525	40°	3 1/16	25K	045923094095	24/6
90 CRI—CEC/T20												
S9485*■	7PAR20/LED/40'/27K/90CRI	7	120	90	2700K	Warm White	470	40°	3	25K	045923094859	24/6
S8581*■	7PAR20/LED/40'/30K/90CRI	7	120	90	3000K	Soft White	470	40°	3	25K	045923085819	24/6
S8494*	7PAR20/LED/40'/40K/90CRI	7	120	90	4000K	Cool White	470	40°	3	25K	045923084942	24/6
S8598*	7PAR20/LED/40'/50K/90CRI	7	120	90	5000K	Natural Light	470	40°	3	25K	045923085987	24/6

** See warranty for details. ■ Also T24 compliant.

13W LED PAR30 short neck lamps

- **50W PAR30 short neck replacement uses only 13 Watts**
- Down lighting
- Track lighting
- Dimmable
- IP65 Listed - indoor/outdoor
- Approved for totally enclosed fixtures**
- Long life—25,000 hours
- ENERGY STAR certified*
- 3 Year warranty

Illumination

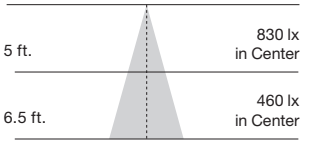

Beam Angle : 25°

Illumination

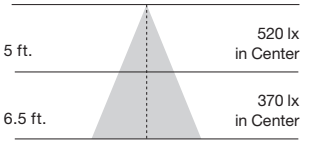

Beam Angle : 40°

Illumination

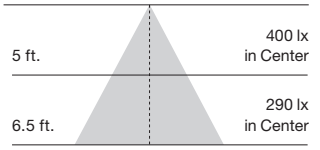

Beam Angle: 60°

LED PAR Lamps

DIMMABLE | ENCLOSED FIXTURE | WET LOCATION | * ENERGY STAR

Item Number	Lamp Description	W	V	CRI	CCT	Color Temp.	Lm	Bm	M.O.L. (Inches)	Life/ Hrs.	UPC	Pack
LED PAR30 Short Neck - Replaces 50W												
S9410*	13PAR30/SN/LED/25'/2700K/120V/SP	13	120	80	2700K	Warm White	1000	25°	3 ⅝	25K	045923094101	12/6
S9411*	13PAR30/SN/LED/25'/3000K/120V/SP	13	120	80	3000K	Soft White	1000	25°	3 ⅝	25K	045923094118	12/6
S9412*	13PAR30/SN/LED/25'/3500K/120V/SP	13	120	80	3500K	Neutral White	1000	25°	3 ⅝	25K	045923094125	12/6
S9413*	13PAR30/SN/LED/25'/4000K/120V/SP	13	120	80	4000K	Cool White	1000	25°	3 ⅝	25K	045923094132	12/6
S9414*	13PAR30/SN/LED/25'/5000K/120V/SP	13	120	80	5000K	Natural Light	1000	25°	3 ⅝	25K	045923094149	12/6
S9415*	13PAR30/SN/LED/40'/2700K/120V/FL	13	120	80	2700K	Warm White	1000	40°	3 ⅝	25K	045923094156	12/6
S9416*	13PAR30/SN/LED/40'/3000K/120V/FL	13	120	80	3000K	Soft White	1000	40°	3 ⅝	25K	045923094163	12/6
S9417*	13PAR30/SN/LED/40'/3500K/120V/FL	13	120	80	3500K	Neutral White	1000	40°	3 ⅝	25K	045923094170	12/6
S9418*	13PAR30/SN/LED/40'/4000K/120V/FL	13	120	80	4000K	Cool White	1000	40°	3 ⅝	25K	045923094187	12/6
S9419*	13PAR30/SN/LED/40'/5000K/120V/FL	13	120	80	5000K	Natural Light	1000	40°	3 ⅝	25K	045923094194	12/6
S9420*	13PAR30/SN/LED/60'/2700K/120V/WFL	13	120	80	2700K	Warm White	1000	60°	3 ⅝	25K	045923094200	12/6
S9421*	13PAR30/SN/LED/60'/3000K/120V/WFL	13	120	80	3000K	Soft White	1000	60°	3 ⅝	25K	045923094217	12/6
S9422*	13PAR30/SN/LED/60'/3500K/120V/WFL	13	120	80	3500K	Neutral White	1000	60°	3 ⅝	25K	045923094224	12/6
S9423*	13PAR30/SN/LED/60'/4000K/120V/WFL	13	120	80	4000K	Cool White	1000	60°	3 ⅝	25K	045923094231	12/6
S9424*	13PAR30/SN/LED/60'/5000K/120V/WFL	13	120	80	5000K	Natural Light	1000	60°	3 ⅝	25K	045923094248	12/6
90 CRI—CEC/T20												
S9486*■	13PAR30/SN/LED/40'/27K/90CRI	13	120	90	2700K	Warm White	820	40°	3 ⅝	25K	045923094866	12/6
S8582*■	13PAR30/SN/LED/40'/30K/90CRI	13	120	90	3000K	Soft White	820	40°	3 ⅝	25K	045923085826	12/6
S8495*	13PAR30/SN/LED/40'/40K/90CRI	13	120	90	4000K	Cool White	820	40°	3 ⅝	25K	045923084959	12/6

** See warranty for details. ■ Also T24 compliant.

13W LED PAR30 long neck lamps

- **75W PAR30 long neck replacement uses only 13 Watts**
- Down lighting
- Track lighting
- Dimmable
- IP65 Listed - indoor/outdoor
- Approved for totally enclosed fixtures**
- Long life—25,000 hours
- ENERGY STAR certified*
- 3 Year warranty

Illumination

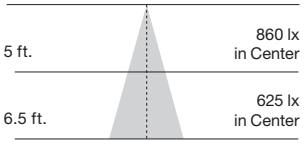

Beam Angle : 25°

Illumination

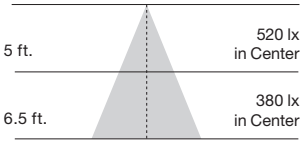

Beam Angle : 40°

Illumination

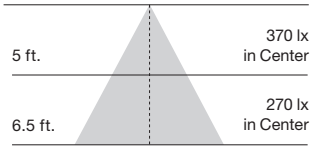

Beam Angle: 60°

LED PAR Lamps

DIMMABLE | ENCLOSED FIXTURE | WET LOCATION | * ENERGY STAR

Item Number	Lamp Description	W	V	CRI	CCT	Color Temp.	Lm	Bm	M.O.L. (Inches)	Life/ Hrs.	UPC	Pack
LED PAR30 Long Neck - Replaces 75W												
S9425*	13PAR30/LN/LED/25'/2700K/120V/SP	13	120	80	2700K	Warm White	1000	25°	4 9/16	25K	045923094255	12/6
S9426*	13PAR30/LN/LED/25'/3000K/120V/SP	13	120	80	3000K	Soft White	1000	25°	4 9/16	25K	045923094262	12/6
S9427*	13PAR30/LN/LED/25'/3500K/120V/SP	13	120	80	3500K	Neutral White	1000	25°	4 9/16	25K	045923094279	12/6
S9428*	13PAR30/LN/LED/25'/4000K/120V/SP	13	120	80	4000K	Cool White	1000	25°	4 9/16	25K	045923094286	12/6
S9429*	13PAR30/LN/LED/25'/5000K/120V/SP	13	120	80	5000K	Natural Light	1000	25°	4 9/16	25K	045923094293	12/6
S9430*	13PAR30/LN/LED/40'/2700K/120V/FL	13	120	80	2700K	Warm White	1000	40°	4 9/16	25K	045923094309	12/6
S9431*	13PAR30/LN/LED/40'/3000K/120V/FL	13	120	80	3000K	Soft White	1000	40°	4 9/16	25K	045923094316	12/6
S9432*	13PAR30/LN/LED/40'/3500K/120V/FL	13	120	80	3500K	Neutral White	1000	40°	4 9/16	25K	045923094323	12/6
S9433*	13PAR30/LN/LED/40'/4000K/120V/FL	13	120	80	4000K	Cool White	1000	40°	4 9/16	25K	045923094330	12/6
S9434*	13PAR30/LN/LED/40'/5000K/120V/FL	13	120	80	5000K	Natural Light	1000	40°	4 9/16	25K	045923094347	12/6
S9435*	13PAR30/LN/LED/60'/2700K/120V/WFL	13	120	80	2700K	Warm White	1000	60°	4 9/16	25K	045923094354	12/6
S9436*	13PAR30/LN/LED/60'/3000K/120V/WFL	13	120	80	3000K	Soft White	1000	60°	4 9/16	25K	045923094361	12/6
S9437*	13PAR30/LN/LED/60'/3500K/120V/WFL	13	120	80	3500K	Neutral White	1000	60°	4 9/16	25K	045923094378	12/6
S9438*	13PAR30/LN/LED/60'/4000K/120V/WFL	13	120	80	4000K	Cool White	1000	60°	4 9/16	25K	045923094385	12/6
S9439*	13PAR30/LN/LED/60'/5000K/120V/WFL	13	120	80	5000K	Natural Light	1000	60°	4 9/16	25K	045923094392	12/6
90 CRI—CEC/T20												
S9487*■	13PAR30/LN/LED/40'/27K/90CRI	13	120	90	2700K	Warm White	820	40°	4 19/32	25K	045923094873	12/6
S8583*■	13PAR30/LN/LED/40'/30K/90CRI	13	120	90	3000K	Soft White	820	40°	4 19/32	25K	045923085833	12/6
S8496*	13PAR30/LN/LED/40'/40K/90CRI	13	120	90	4000K	Cool White	820	40°	4 19/32	25K	045923084966	12/6

** See warranty for details. ■ Also T24 compliant.

15 & 18W LED PAR38 lamps

- **90 & 100W PAR38 replacement uses only 15-18 Watts**
- Down lighting • Track lighting
- Dimmable
- IP65 Listed—indoor/outdoor
- Approved for totally enclosed fixtures**
- Long life—25,000 hours
- ENERGY STAR certified*
- 3 Year warranty

S9480 S9481

S9482 S9483 S9484

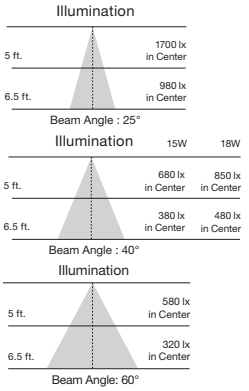

LED PAR Lamps

Item Number	Lamp Description	W	V	CRI	CCT	Color Temp.	Lm	Bm	M.O.L. (Inches)	Life/ Hrs.	UPC	Pack
LED PAR38 - Replaces 90W												
S9440*	15PAR38/LED/25'/2700K/120V/SP	15	120	80	2700K	Warm White	1200	25°	5 3/16	25K	045923094408	12/6
S9441*	15PAR38/LED/25'/3000K/120V/SP	15	120	80	3000K	Soft White	1200	25°	5 3/16	25K	045923094415	12/6
S9442*	15PAR38/LED/25'/3500K/120V/SP	15	120	80	3500K	Neutral White	1200	25°	5 3/16	25K	045923094422	12/6
S9443*	15PAR38/LED/25'/4000K/120V/SP	15	120	80	4000K	Cool White	1200	25°	5 3/16	25K	045923094439	12/6
S9444*	15PAR38/LED/25'/5000K/120V/SP	15	120	80	5000K	Natural Light	1200	25°	5 3/16	25K	045923094446	12/6
S9445*	15PAR38/LED/40'/2700K/120V/FL	15	120	80	2700K	Warm White	1200	40°	5 3/16	25K	045923094453	12/6
S9446*	15PAR38/LED/40'/3000K/120V/FL	15	120	80	3000K	Soft White	1200	40°	5 3/16	25K	045923094460	12/6
S9447*	15PAR38/LED/40'/3500K/120V/FL	15	120	80	3500K	Neutral White	1200	40°	5 3/16	25K	045923094477	12/6
S9448*	15PAR38/LED/40'/4000K/120V/FL	15	120	80	4000K	Cool White	1200	40°	5 3/16	25K	045923094484	12/6
S9449*	15PAR38/LED/40'/5000K/120V/FL	15	120	80	5000K	Natural Light	1200	40°	5 3/16	25K	045923094491	12/6
S9450*	15PAR38/LED/60'/2700K/120V/WFL	15	120	80	2700K	Warm White	1200	60°	5 3/16	25K	045923094507	12/6
S9451*	15PAR38/LED/60'/3000K/120V/WFL	15	120	80	3000K	Soft White	1200	60°	5 3/16	25K	045923094514	12/6
S9452*	15PAR38/LED/60'/3500K/120V/WFL	15	120	80	3500K	Neutral White	1200	60°	5 3/16	25K	045923094521	12/6
S9453*	15PAR38/LED/60'/4000K/120V/WFL	15	120	80	4000K	Cool White	1200	60°	5 3/16	25K	045923094538	12/6
S9454*	15PAR38/LED/60'/5000K/120V/WFL	15	120	80	5000K	Natural Light	1200	60°	5 3/16	25K	045923094545	12/6
90 CRI—CEC/T20												
S9488*■	15PAR38/LED/40'/27K	15	120	90	2700K	Warm White	1000	40°	5 3/16	25K	045923094880	12/6
S8584*■	15PAR38/LED/40'/30K	15	120	90	3000K	Soft White	1000	40°	5 3/16	25K	045923085840	12/6
S8497*	15PAR38/LED/40'/40K	15	120	90	4000K	Cool White	1000	40°	5 3/16	25K	045923084973	12/6
S8498*	15PAR38/LED/40'/50K	15	120	90	5000K	Natural Light	1000	40°	5 3/16	25K	045923084980	12/6
LED PAR38 - Replaces 100W												
S9455*	18PAR38/LED/40'/3000K/120V/FL	18	120	80	3000K	Soft White	1400	40°	5 3/16	25K	045923094552	12/6
S9456*	18PAR38/LED/40'/4000K/120V/FL	18	120	80	4000K	Cool White	1400	40°	5 3/16	25K	045923094569	12/6
LED PAR38 - Non-Dimmable 2 Pack - Replaces 90W												
S9457*	15PAR38/LED/60'/3000K/120V/2PK	15	120	80	3000K	Soft White	1150	60°	5 3/16	25K	045923094576	8-2pks
LED PAR38 - Colors												
S9480	15PAR38/LED/40'/RED/120V	15	120	—	—	Red	—	40°	5 3/16	25K	045923094804	12/6
S9481	15PAR38/LED/40'/GREEN/120V	15	120	—	—	Green	—	40°	5 3/16	25K	045923094811	12/6
S9482	15PAR38/LED/40'/BLUE/120V	15	120	—	—	Blue	—	40°	5 3/16	25K	045923094828	12/6
S9483	15PAR38/LED/40'/AMBER/120V	15	120	—	—	Amber	—	40°	5 3/16	25K	045923094835	12/6
S9484	15PAR38/LED/40'/YELLOW/120V	15	120	—	—	Yellow	—	40°	5 3/16	25K	045923094842	12/6

** See warranty for details. ■ Also T24 compliant.

LED PAR16 4.5 & 6.5W lamps

- **45W & 60W Halogen PAR16 lamp replacement uses only 4.5-6.5 Watts**
- Indoor residential and commercial lighting
- Down lighting
- Accent lighting
- Pendant lighting
- Dimmable
- Damp location
- Approved for totally enclosed fixtures**
- Long life—25,000 hours
- 3 Year warranty

Beam Profile

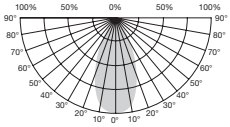

Beam Angle: 40°

Illumination at 3000K

	4.5W	6.5W
1m	525 lx in Center	730 lx in Center
2m	130 lx in Center	185 lx in Center

Beam Angle: 40°

DIMMABLE | DAMP LOCATION | ENCLOSED FIXTURE

LED PAR16 Lamps

Item Number	Lamp Description	W	V	CRI	CCT	Lm	Bm	M.O.L. (Inches)	Life/ Hrs.	UPC	Pack
S9386	4.5PAR16/LED/40'/3000K/120V	4.5	120	80	3000K	370	40°	2 ⅞	25K	045923093869	12/1
S9387	4.5PAR16/LED/40'/5000K/120V	4.5	120	80	5000K	370	40°	2 ⅞	25K	045923093876	12/1
S9388	6.5PAR16/LED/40'/3000K/120V	6.5	120	80	3000K	520	40°	2 ⅞	25K	045923093883	12/1
S9389	6.5PAR16/LED/40'/5000K/120V	6.5	120	80	5000K	520	40°	2 ⅞	25K	045923093890	12/1
90 CRI—CEC/T20											
S8585	4PAR16/LED/40'/30K/120V	4	120	90	3000K	360	40°	2 ⅞	25K	045923085857	12/1
** See warranty for details.											

1.6W & 3W, 12V LED MR11 lamps

- **20 Watt MR11 replacement, uses up to 3 Watts**
- Indoor residential and commercial lighting
- Down lighting
- Accent lighting
- Pendant lighting
- Non-dimmable
- Damp location
- Approved for totally enclosed fixtures**
- Long life—25,000 hours
- 3 Year warranty

S9280, S9281, S9282, S9283

S9550, S9551

Beam Profile

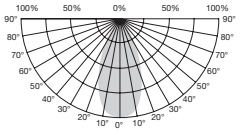

Beam Angle: 40°

Beam Profile

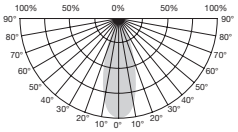

Beam Angle: 25°

Illumination

	2700K	3000K	4000K	5000K
1m	700 lx in Center	730 lx in Center	760 lx in Center	800 lx in Center
2m	175 lx in Center	183 lx in Center	190 lx in Center	200 lx in Center

Beam Angle: 25°

DAMP LOCATION | ENCLOSED FIXTURE

1.6W & 3W, 12V LED MR11 Lamps With GU4 Base

Item Number	Lamp Description	W	V	CRI	CCT	Lm	Bm	M.O.L. (Inches)	Life/ Hrs.	UPC	Pack
S9280	3MR11/LED/25'/2700K/12V	3	12	80	2700K	210	25°	1 ½	25K	045923092800	12/1
S9281	3MR11/LED25'/3000K/12V	3	12	80	3000K	220	25°	1 ½	25K	045923092817	12/1
S9282	3MR11/LED/25'/4000K/12V	3	12	80	4000K	230	25°	1 ½	25K	045923092824	12/1
S9283	3MR11/LED/25'/5000K/12V	3	12	80	5000K	240	25°	1 ½	25K	045923092831	12/1
** See warranty for details.											
S9550	LED/1.6MR11/40'/3000K/12V/D	1.6	12	80	3000K	200	40°	1 ½	25K	045923095504	20/1
S9551	LED/1.6MR11/40'/5000K/12V/D	1.6	12	80	5000K	200	40°	1 ½	25K	045923095511	20/1

LED MR16 lamps

- Down lighting
- Accent lighting
- Pendant lighting
- Dimmable
- Approved for totally enclosed fixtures**
- Long life—25,000 hours
- ENERGY STAR certified*
- 3 Year warranty

S9552, S9553

S9490, S9491, S9492, S9493, S9494, S9495, S9496, S9497, S9498, S9499, S9616

S8635, S8636, S8637, S8638, S8639, S8640, S8641, S8642, S8643, S8644

LED MR16 Lamps

DIMMABLE | ENCLOSED FIXTURE | DAMP LOCATION | * ENERGY STAR

Item Number	Lamp Description	W	V	CRI	CCT	Lm	Bm	M.O.L. (Inches)	Life/ Hrs.	UPC	Pack
S9552	LED/3MR16/40'/3000K/12V/D	3	12	80	3000K	330	40°	2	25K	045923095528	20/1
S9553	LED/3MR16/40'/5000K/12V/D	3	12	80	5000K	330	40°	2	25K	045923095535	20/1
80 CRI—CEC/T20											
S9490*	6.5MR16/LED/25'/27K/12V	6.5	12	80	2700K	500	25°	1 ¾	25K	045923094903	12/1
S9491*	6.5MR16/LED/25'/30K/12V	6.5	12	80	3000K	500	25°	1 ¾	25K	045923094910	12/1
S9492	6.5MR16/LED/25'/35K/12V	6.5	12	80	3500K	500	25°	1 ¾	25K	045923094927	12/1
S9493	6.5MR16/LED/25'/40K/12V	6.5	12	80	4000K	500	25°	1 ¾	25K	045923094934	12/1
S9494	6.5MR16/LED/25'/50K/12V	6.5	12	80	5000K	500	25°	1 ¾	25K	045923094941	12/1
S9495*	6.5MR16/LED/40'/27K/12V	6.5	12	80	2700K	500	40°	1 ¾	25K	045923094958	12/1
S9496*	6.5MR16/LED/40'/30K/12V	6.5	12	80	3000K	500	40°	1 ¾	25K	045923094965	12/1
S9497*	6.5MR16/LED/40'/35K/12V	6.5	12	80	3500K	500	40°	1 ¾	25K	045923094972	12/1
S9498*	6.5MR16/LED/40'/40K/12V	6.5	12	80	4000K	500	40°	1 ¾	25K	045923094989	12/1
S9499*	6.5MR16/LED/40'/50K/12V	6.5	12	80	5000K	500	40°	1 ¾	25K	045923094996	12/1
90 CRI											
S9616*■	6.5MR16/LED/40'/30K/12V/90CRI	6.5	12	90	3000K	450	40°	1 ¾	25K	045923094965	12/1
Single Optic - 75W Replacement—CEC/T20											
S8635	8MR16/LED/15'/27K/90CRI/12V	8	12	90	2700K	490	15°	1 ⅞	25K	045923086359	12/1
S8636	8MR16/LED/15'/30K/90CRI/12V	8	12	90	3000K	490	15°	1 ⅞	25K	045923086366	12/1
S8637	8MR16/LED/15'/35K/90CRI/12V	8	12	90	3500K	490	15°	1 ⅞	25K	045923086373	12/1
S8638	8MR16/LED/15'/40K/90CRI/12V	8	12	90	4000K	490	15°	1 ⅞	25K	045923086380	12/1
S8639	8MR16/LED/15'/50K/90CRI/12V	8	12	90	5000K	490	15°	1 ⅞	25K	045923086397	12/1
S8640*	8MR16/LED/40'/27K/90CRI/12V	8	12	90	2700K	490	40°	1 ⅞	25K	045923086403	12/1
S8641*	8MR16/LED/40'/30K/90CRI/12V	8	12	90	3000K	490	40°	1 ⅞	25K	045923086410	12/1
S8642	8MR16/LED/40'/35K/90CRI/12V	8	12	90	3500K	490	40°	1 ⅞	25K	045923086427	12/1
S8643	8MR16/LED/40'/40K/90CRI/12V	8	12	90	4000K	490	40°	1 ⅞	25K	045923086434	12/1
S8644	8MR16/LED/40'/50K/90CRI/12V	8	12	90	5000K	490	40°	1 ⅞	25K	045923086441	12/1

All 12V MR16 lamps are compatible with electronic and magnetic transformers. Visit www.satco.com for compatibility information and warranty details.
** See warranty for details. ■ Also T24 compliant.

MR16 GU10 LED lamps

- Down lighting
- Accent lighting
- Pendant lighting
- Dimmable
- Approved for totally enclosed fixtures**
- Long life—25,000 hours
- ENERGY STAR certified*
- 3 Year warranty

Illumination

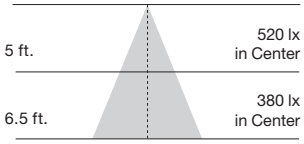

Beam Angle : 40°

MR16 GU10 LED Lamps

Item Number	Lamp Description	W	V	CRI	CCT	Lm	Bm	M.O.L. (Inches)	Life/ Hrs.	UPC	Pack
S9380*	4.5MR16/LED/40'/30K/120V/GU10	4.5	120	80	3000K	370	40°	2 3/16	25K	045923093807	12/1
S9381	4.5MR16/LED/40'/50K/120V/GU10	4.5	120	80	5000K	370	40°	2 3/16	25K	045923093814	12/1
S9382	6.5MR16/LED/40'/27K/120V/GU10	6.5	120	80	2700K	500	40°	2 3/16	25K	045923093821	12/1
S9383*	6.5MR16/LED/40'/30K/120V/GU10	6.5	120	80	3000K	500	40°	2 3/16	25K	045923093838	12/1
S9384	6.5MR16/LED/40'/40K/120V/GU10	6.5	120	80	4000K	500	40°	2 3/16	25K	045923093845	12/1
S9385*	6.5MR16/LED/40'/50K/120V/GU10	6.5	120	80	5000K	500	40°	2 3/16	25K	045923093852	12/1
90 CRI—CEC/T20											
S8588	6.5MR16/LED/40'/27K/120V/GU10	6.5	120	90+	2700K	450	40°	2 3/16	25K	045923085888	12/1
S8589	6.5MR16/LED/40'/30K/120V/GU10	6.5	120	90+	3000K	450	40°	2 3/16	25K	045923085895	12/1

** See warranty for details.

Silicon LED replacements for Halogen BA15S, E11 Mini Can, G4, G6.35, G8 & G9 lamps

- Solid state LED lighting
- High efficacy
- Omni-directional light
- E11—Mini Can
- Dimmable
- Long life—25,000 hours

S8688, S8689
BA15S

S28684, S28685,
S28686, S28687
E11 Mini Can

S8600, S9542,
S9543
G4

S8601, S9544,
S9545
G6.35

S28680, S28681
G8

S9546, S9547
G9

S28602, S28682,
S28683, S29548,
S29549, S29697
G9

Silicon LED Replacements for Halogen BA15S, E11 Mini Can, G4, G6.35, G8 & G9 Lamps

DAMP LOCATION | DIMMABLE | ENCLOSED FIXTURE

Item Number	Lamp Description	W	V	Finish	Base	CRI	CCT	Lm	M.O.L. (Inches)	Life/ Hrs.	UPC	Pack
BA15S												
S8688	LED/3W/BA15S/CL/3K/12V	3	12	Clear	BA15S	80	3000K	330	1 5/8	25K	045923086885	20/1
S8689	LED/3W/BA15S/CL/5K/12V	3	12	Clear	BA15S	80	5000K	330	1 9/16	25K	045923086892	20/1
E11 Mini Can												
S28684	LED/4W/E11/MC/CL/3K/120V	4	120-130	Clear	E11	80	3000K	480	2 5/16	25K	045923286841	20/1
S28685	LED/4W/E11/MC/CL/5K/120V	4	120-130	Clear	E11	80	5000K	480	2 5/16	25K	045923286858	20/1
S28686	LED/4W/E11/MC/FR/3K/120V	4	120-130	Frost	E11	80	3000K	460	2 5/16	25K	045923286865	20/1
S28687	LED/4W/E11/MC/FR/5K/120V	4	120-130	Frost	E11	80	5000K	460	2 5/16	25K	045923286872	20/1
G4 Bi-Pin												
S9542	LED/1.6W/JC/G4/12V/3000K/200L/360˚/D	1.6	12	Clear	G4	80	3000K	200	1 7/16	25K	045923095429	20/1
S8600	LED/1.6W/JC/G4/12V/3K/CARDED	1.6	12	Clear	G4	80	3000K	200	1 7/16	25K	045923086007	12/1
S9543	LED/1.6W/JC/G4/12V/5000K/200L/360˚/D	1.6	12	Clear	G4	80	5000K	200	1 7/16	25K	045923095436	20/1
G6.35												
S9544	LED/3W/JC/G6.35/12V/3000K/300L/360˚/D	3	12	Clear	G6.35	80	3000K	300	1 5/8	25K	045923095443	20/1
S8601	LED/3W/JC/G6.35/12V/3K/CARDED	3	12	Clear	G6.35	80	3000K	300	1 5/8	25K	045923086014	12/1
S9545	LED/3W/JC/G6.35/12V/5000K/300L/360˚/D	3	12	Clear	G6.35	80	5000K	300	1 5/8	25K	045923095450	20/1
G8												
S28680	LED/4W/JC/G8/CL/3K/120V	4	120-130	Clear	G8	80	3000K	480	2	25K	045923286803	20/1
S28681	LED/4W/JC/G8/CL/5K/120V	4	120-130	Clear	G8	80	5000K	480	2	25K	045923286810	20/1
G9												
S9546	LED/1.6W/JCD/G9/120V/3000K/D	1.6	120	Clear	G9	80	3000K	200	1 7/8	25K	045923095467	20/1
S9547	LED/1.6W/JCD/G9/120V/5000K/D	1.6	120	Clear	G9	80	5000K	200	1 7/8	25K	045923095474	20/1
S29548	LED/4W/JCD/G9/120V/3000K/D	4	120-130	Clear	G9	80	3000K	480	2 7/16	25K	045923295485	20/1
S28602	LED/4W/JCD/G9/120V/3K/CARDED	4	120-130	Clear	G9	80	3000K	480	2 7/16	25K	045923286025	12/1
S28682	LED/4W/JCD/G9/FR/3000K/120V	4	120-130	Frost	G9	80	3000K	460	2 7/16	25K	045923286827	20/1
S29549	LED/4W/JCD/G9/120V/5000K/D	4	120-130	Clear	G9	80	5000K	480	2 7/16	25K	045923295492	20/1
S28683	LED/4W/JCD/G9/FR/5000K/120V	4	120-130	Frost	G9	80	5000K	460	2 7/16	25K	045923286834	20/1
S29697	LED/4W/JCD/G9/120V/3K/90CRI	4	120-130	Clear	G9	90	3000K	360	2 7/16	25K	045923296970	20/1

4" LED recessed downlight retrofits

- Residential
- Office
- Retail
- Hospitality
- Solid state LED lighting
- Direct replacement for reflector lamps
- Dimmable
- c-UL-us Classified damp location - Gimbal
- c-UL-us Classified wet location - Baffle
- JA8-2016
- CEC/T20 Compliant
- Long life—50,000 hours
- ENERGY STAR® certified*
- 5 Year warranty

E26 Adapter included (S9001)
GU10 Adapter sold separately (S9000)

4" Downlight Gimbal

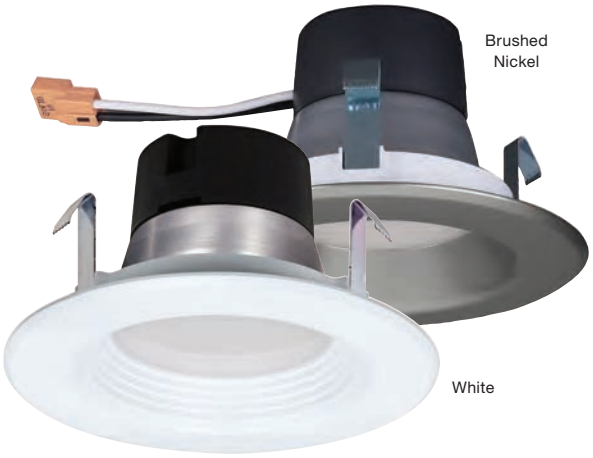

4" Downlight Baffle

Beam Profile

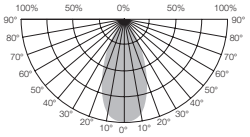

Beam Angle: 40°

Beam Profile

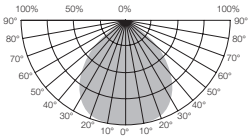

Beam Angle: 90°

Illumination

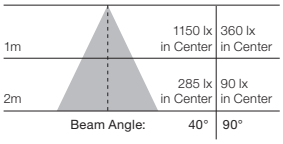

Beam Profile

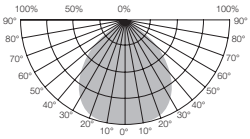

Beam Angle: 90°

Illumination

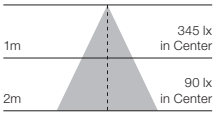

Beam Angle: 90°

DIMMABLE | DAMP LOCATION Gimbal | WET LOCATION Baffle | * ENERGY STAR

4" LED Recessed Downlight Retrofits

Item Number	Lamp Description	W	V	CRI	CCT	Lm	Bm	M.O.L. (Inches)	Life/ Hrs.	UPC	Pack
4" LED Baffle Retrofits											
S29713*■	8.5WLED/RDL/4"/27K/120V	8.5	120	90	2700K	600	90°	2 7/8	50K	045923297137	16/1
S29714*■	8.5WLED/RDL/4"/30K/120V	8.5	120	90	3000K	600	90°	2 7/8	50K	045923297144	16/1
S9744	8.5WLED/RDL/4/30K/BN/120V (Brushed Nickel)	8.5	120	90	3000K	600	90°	2 7/8	50K	045923097447	16/1
S29715*■	8.5WLED/RDL/4"/40K/120V	8.5	120	90	4000K	630	90°	2 7/8	50K	045923297151	16/1
S29716*	8.5WLED/RDL/4"/50K/120V	8.5	120	90	5000K	630	90°	2 7/8	50K	045923297168	16/1
4" LED Gimbal Retrofits											
S29463*■	9.5WLED/DIR/4/40'/27K/120V	9.5	120	90	2700K	600	40°	3 5/16	50K	045923294631	8/1
S29464*■	9.5WLED/DIR/4/40'/30K/120V	9.5	120	90	3000K	600	40°	3 5/16	50K	045923294648	8/1
S29465*■	9.5WLED/DIR/4/40'/40K/120V	9.5	120	90	4000K	600	40°	3 5/16	50K	045923294655	8/1
S29466*■	9.5WLED/DIR/4/90'/27K/120V	9.5	120	90	2700K	600	90°	3 5/16	50K	045923294662	8/1
S29467*■	9.5WLED/DIR/4/90'/30K/120V	9.5	120	90	3000K	600	90°	3 5/16	50K	045923294679	8/1
S29468*■	9.5WLED/DIR/4/90'/40K/120V	9.5	120	90	4000K	600	90°	3 5/16	50K	045923294686	8/1

■ Also T24 compliant.

5"/6" LED recessed downlight retrofits

- Residential
- Office
- Retail
- Hospitality
- Solid state LED lighting
- Direct replacement for reflector lamps
- Dimmable
- High efficiency/Environmentally friendly
- c-UL-us Classified damp location - Gimbal
- c-UL-us Classified wet location - Baffle
- JA8-2016
- CEC/T20 Compliant
- Long life—50,000 hours
- ENERGY STAR® certified*
- 5 Year warranty

E26 Adapter included (S9001)
GU24 Adapter sold separately (S8999)
GU10 Adapter sold separately (S9000)

Pressure bracket (80-2676)
alternate installation option available.

Torsion springs (80/2709)

5"/6" Downlight Gimbal

Beam Profile

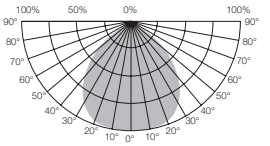

Beam Angle: 90°

Illumination

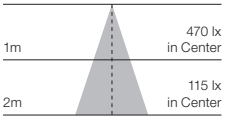

Beam Angle: 90°

5"/6" Downlight Baffle

Beam Profile

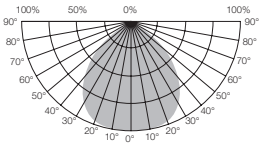

Beam Angle: 90°

Illumination

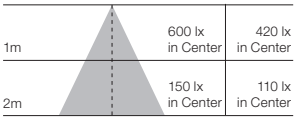

Beam Angle: 90°

5"/6" LED Recessed Downlight Retrofits

DIMMABLE | DAMP LOCATION (Gimbal) | WET LOCATION (Baffle) | * ENERGY STAR

Item Number	Lamp Description	W	V	CRI	CCT	Lm	Bm	M.O.L. (Inches)	Life/ Hrs.	UPC	Pack
5"/6" LED Baffle Retrofits											
S29724*■	10.5WLED/RDL/5"-6"/27K/120V	10.5	120	90	2700K	800	90°	3 7/16	50K	045923297243	8/1
S29725*■	10.5WLED/RDL/5"-6"/30K/120V	10.5	120	90	3000K	800	90°	3 7/16	50K	045923297250	8/1
S9745	10.5W/LED/RDL/5-6/30K/BN/120V (Brushed Nickel)	10.5	120	90	3000K	800	90°	3 7/16	50K	045923097454	8/1
S29726*■	10.5WLED/RDL/5"-6"/40K/120V	10.5	120	90	4000K	840	90°	3 7/16	50K	045923297267	8/1
S29727*	10.5WLED/RDL/5"-6"/50K/120V	10.5	120	90	5000K	840	90°	3 7/16	50K	045923297274	8/1
S29740*■	15.5WLED/RDL/5"-6"/27K/120V	15.5	120	90	2700K	1200	90°	3 7/16	50K	045923297403	8/1
S29741*■	15.5WLED/RDL/5"-6"/30K/120V	15.5	120	90	3000K	1200	90°	3 7/16	50K	045923297410	8/1
S29742*■	15.5WLED/RDL/5"-6"/40K/120V	15.5	120	90	4000K	1260	90°	3 7/16	50K	045923297427	8/1
S29743*	15.5WLED/RDL/5"-6"/50K/120V	15.5	120	90	5000K	1260	90°	3 7/16	50K	045923297434	8/1
5"/6" LED Gimbal Retrofits											
S29472*■	13WLED/DIR/5"-6"/27K/120V	13	120	90	2700K	800	90°	4 1/4	50K	045923094729	8/1
S29473*■	13WLED/DIR/5"-6"/30K/120V	13	120	90	3000K	800	90°	4 1/4	50K	045923094736	8/1
S29474*■	13WLED/DIR/5"-6"/40K/120V	13	120	90	4000K	840	90°	4 1/4	50K	045923094743	8/1

■ Also T24 compliant.

5"/6" LED recessed downlight retrofits

- Residential
- Office
- Retail
- Hospitality
- Direct replacement for reflector lamps
- High efficiency/environmentally friendly
- Dimmable***
- Wet location
- c-UL-us Classified
- Long life—35,000 hours
- ENERGY STAR® certified*
- 5 Year warranty**

E26 Adapter included

This retrofit is for use with recessed housings with an E26 socket only.

Illumination

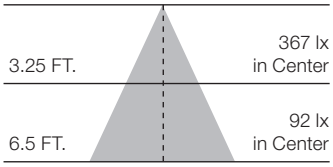

Beam Angle: 90°

5"/6" LED Recessed Downlight Retrofits

DIMMABLE WET LOCATION * ENERGY STAR

Item Number	Lamp Description	W	V	CRI	CCT	Lm	Bm	M.O.L. (Inches)	Life/ Hrs.	UPC	Pack/ Master
S29312*	9.8WLED/RDL/5-6/27K/120V	9.8	120	90	2700K	650	90°	2 5/16	35K	045923293122	12/1
S29313*	9.8WLED/RDL/5-6/30K/120V	9.8	120	90	3000K	650	90°	2 5/16	35K	045923293139	12/1
S29314*	9.8WLED/RDL/5-6/40K/120V	9.8	120	90	4000K	650	90°	2 5/16	35K	045923293146	12/1
S29315*	9.8WLED/RDL/5-6/50K/120V	9.8	120	90	5000K	650	90°	2 5/16	35K	045923293153	12/1

*** Consult Satco or visit www.satco.com for an up to date dimmer compatibility list.
** See separate warranty for complete terms and conditions.

Beam Profile

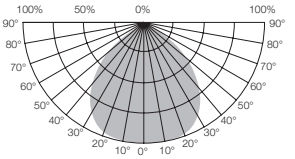

Beam Angle: 115°

Illumination	4"	5"-6"
1m	340 lx in Center	420 lx in Center
2m	85 lx in Center	100 lx in Center

Beam Angle: 115°

Quick Trim™ 4", 5"/6" LED recessed downlight retrofit 2-packs

Innovative design–adjustable neck makes installation into any recessed can easy

- Residential
- Office
- Retail
- Hospitality
- Direct replacement for reflector lamps
- Dimmable***
- Damp location listed
- Long life—25,000 hours
- ENERGY STAR® certified*
- 5 Year warranty

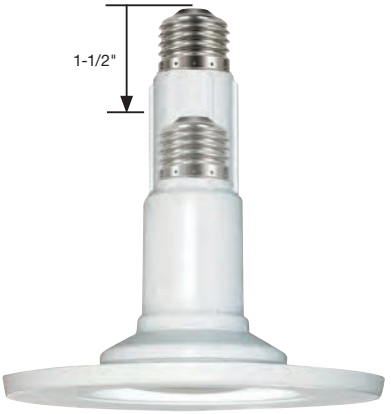

Extends to reach the socket.
Retracts to meet the surface.

Step 1

Screw lamp into existing socket.

Step 2

Push into the fixture until the trim is flush against surface.

LED Recessed Downlight Retrofit 2-Packs

Item Number	Lamp Description	W	V	CRI	CCT	Lm	Bm	M.O.L. (Inches)	Life/ Hrs.	UPC	Pack
S9598*	8.5WLED/4"TRIM/27K/120V/2PK	8.5	120	80	2700K	510	115°	3 13/16 - 5 3/8	25K	045923095986	12-2pks
S9599*	12WLED/5-6"TRIM/27K/120V/2PK	12	120	80	2700K	800	110°	4 ½ - 6 5/16	25K	045923095993	12-2pks

*** Consult Satco or visit www.satco.com for an up to date dimmer compatibility list.

4" LED square trim recessed downlight retrofits

- Residential
- Office
- Retail
- Hospitality
- **45 Watt replacement uses only 9 Watts**
- Direct replacement for reflector lamps
- Durable die-cast finish
- Dimmable***
- Wet location
- c-UL-us Classified
- JA8-2016
- CEC/T20 Compliant
- Long life—50,000 hours
- ENERGY STAR® certified*
- 5 Year warranty

E26 Adapter included (S9001)
GU24 Adapter sold separately (S8999)
GU10 Adapter sold separately (S9000)
Fits in round cans

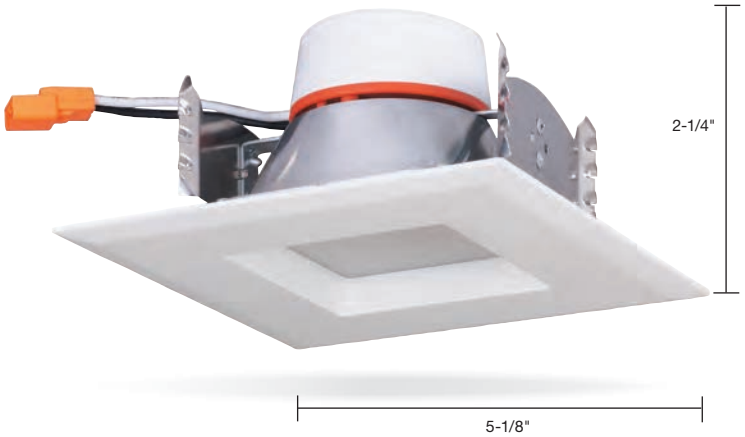

Illumination

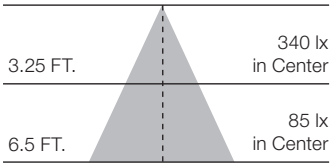

Beam Angle: 90°

4" LED Square Trim Recessed Downlight Retrofits

Item Number	Lamp Description	W	V	CRI	CCT	Lm	Bm	M.O.L. (Inches)	Life/ Hrs.	UPC	Pack
S29756*■	9WLED/4/SQ/27K/120V	9	120	90	2700K	600	90°	4	50K	045923297564	24/1
S29757*■	9WLED/4/SQ/30K/120V	9	120	90	3000K	600	90°	4	50K	045923297571	24/1
S29758*■	9WLED/4/SQ/40K/120V	9	120	90	4000K	600	90°	4	50K	045923297588	24/1
S29759*	9WLED/4/SQ/50K/120V	9	120	90	5000K	600	90°	4	50K	045923297595	24/1

*** Consult Satco or visit www.satco.com for an up to date dimmer compatibility list. ■ Also T24 compliant.

5"/6" LED square trim recessed downlight retrofits

- Residential
- Office
- Retail
- Hospitality
- **Up to 85 Watt replacement uses only 15 Watts**
- Direct replacement for reflector lamps
- Durable die-cast finish
- Dimmable***
- Wet location
- c-UL-us Classified
- JA8-2016
- CEC/T20 Compliant
- Long life—50,000 hours
- ENERGY STAR® certified*
- 5 Year warranty

E26 Adapter included (S9001)
GU24 Adapter sold separately (S8999)
GU10 Adapter sold separately (S9000)
Fits in round cans

Illumination

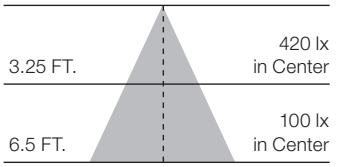

Beam Angle: 90°

5"/6" LED Square Trim Recessed Downlight Retrofits

Item Number	Lamp Description	W	V	CRI	CCT	Lm	Bm	M.O.L. (Inches)	Life/ Hrs.	UPC	Pack
S29770*■	15WLED/5-6/SQ/27K/120V	15	120	90	2700K	1000	90°	5-6	50K	045923297700	12/1
S29771*■	15WLED/5-6/SQ/30K/120V	15	120	90	3000K	1000	90°	5-6	50K	045923297717	12/1
S29772*■	15WLED/5-6/SQ/40K/120V	15	120	90	4000K	1000	90°	5-6	50K	045923297724	12/1
S29773*	15WLED/5-6/SQ/50K/120V	15	120	90	5000K	1000	90°	5-6	50K	045923297731	12/1

*** Consult Satco or visit www.satco.com for an up to date dimmer compatibility list. ■ Also T24 compliant.

Top view

4" LED direct wire edge-lit downlights

- Residential
- Office
- Retail
- Hospitality
- Drop ceilings
- Remodeling
- **Direct replacement for 45 Watt reflector lamps uses only 8.5 Watts**
- Edge lit technology
- Slim design
- Integrated j-box for direct wire installation saves time and materials
- Damp location
- Dimmable***
- c-UL-us listed
- Long life—40,000 hours
- ENERGY STAR® certified*
- 5 Year warranty

Highlights

- Easy install spring clips
- IC rated
- Low profile
- No recessed can required

Illumination

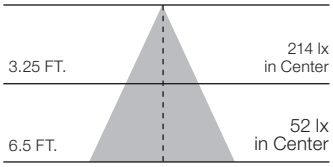

Beam Angle: 100°

4" LED Direct Wire Edge-Lit Downlights

DIMMABLE DAMP LOCATION * ENERGY STAR

Item Number	Lamp Description	W	V	CRI	CCT	Lm	Bm	M.O.L. (Inches)	Life/ Hrs.	UPC	Pack
S29055*	8.5WLED/DW/EL/4/27K/120V	8.5	120	83	2700K	500	100°	1 15/16	40K	045923200014	12/1
S29056*	8.5WLED/DW/EL/4/30K/120V	8.5	120	83	3000K	500	100°	1 15/16	40K	045923290565	12/1
S29057*	8.5WLED/DW/EL/4/40K/120V	8.5	120	83	4000K	500	100°	1 15/16	40K	045923290572	12/1
S29058*	8.5WLED/DW/EL/4/50K/120V	8.5	120	83	5000K	500	100°	1 15/16	40K	045923290589	12/1

*** Consult Satco or visit www.satco.com for an up to date dimmer compatibility list.

Top view

6" LED direct wire edge-lit downlights

- Residential
- Office
- Retail
- Hospitality
- Drop ceilings
- Remodeling
- **Direct replacement for 65 Watt reflector lamps uses only 11.6 Watts**
- Edge lit technology
- Slim design
- Integrated j-box for direct wire installation saves time and materials
- Damp location
- Dimmable***
- c-UL-us listed
- Long life—40,000 hours
- ENERGY STAR® certified*
- 5 Year warranty

Highlights

- Easy install spring clips
- IC rated
- Low profile
- No recessed can required

Illumination

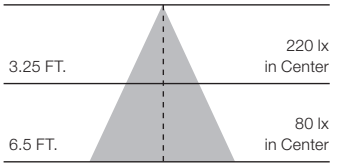

Beam Angle: 100°

6" LED Direct Wire Edge-Lit Downlights

DIMMABLE | DAMP LOCATION | * ENERGY STAR

Item Number	Lamp Description	W	V	CRI	CCT	Lm	Bm	M.O.L. (Inches)	Life/ Hrs.	UPC	Pack
S29061*	11.6WLED/DW/EL/5-6/27K/120V	11.6	120	83	2700K	800	100°	1 15/16	40K	045923290619	12/1
S29062*	11.6WLED/DW/EL/5-6/30K/120V	11.6	120	83	3000K	800	100°	1 15/16	40K	045923290626	12/1
S29063*	11.6WLED/DW/EL/5-6/40K/120V	11.6	120	83	4000K	800	100°	1 15/16	40K	045923290633	12/1
S29059*	11.6WLED/DW/EL/5-6/50K/120V	11.6	120	83	5000K	800	100°	1 15/16	40K	045923290596	12/1

*** Consult Satco or visit www.satco.com for an up to date dimmer compatibility list.

4" LED direct wire downlights

- Residential
- Office
- Retail
- Hospitality
- Drop ceilings
- Remodeling
- **Direct replacement for 45 Watt reflector lamps uses only 7 Watts**
- Integrated j-box for direct wire installation saves time and materials
- Wet location
- Dimmable***
- c-UL-us listed
- Long life—40,000 hours
- ENERGY STAR® certified*
- 5 Year warranty

Highlights

- Easy install spring clips
- IC rated
- Low profile
- No recessed can required

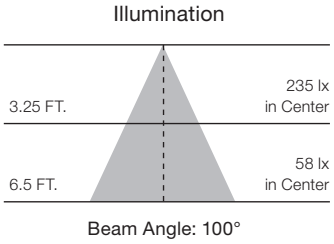

4" LED Direct Wire Downlights

Item Number	Lamp Description	W	V	CRI	CCT	Lm	Bm	M.O.L. (Inches)	Life/ Hrs.	UPC	Pack
S29011*	7WLED/DW/RDL/4/27K/120V	7	120	83	2700K	550	100°	2 ¾	40K	045923290114	12/1
S29012*	7WLED/DW/RDL/4/30K/120V	7	120	83	3000K	550	100°	2 ¾	40K	045923290121	12/1
S29013*	7WLED/DW/RDL/4/40K/120V	7	120	83	4000K	550	100°	2 ¾	40K	045923290138	12/1
S29021*	7WLED/DW/RDL/4/50K/120V	7	120	83	5000K	550	100°	2 ¾	40K	045923290213	12/1

*** Consult Satco or visit www.satco.com for an up to date dimmer compatibility list.

6" LED direct wire downlights

- Residential
- Office
- Retail
- Hospitality
- Drop ceilings
- Remodeling
- **Direct replacement for 65 Watt reflector lamps uses only 9 Watts**
- Integrated j-box for direct wire installation saves time and materials
- Wet location
- Dimmable***
- c-UL-us listed
- Long life—40,000 hours
- ENERGY STAR® certified*
- 5 Year warranty

Highlights

- Easy install spring clips
- IC rated
- Low profile
- No recessed can required

Illumination

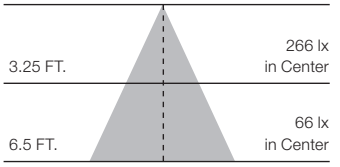

Beam Angle: 100°

6" LED Direct Wire Downlights

Item Number	Lamp Description	W	V	CRI	CCT	Lm	Bm	M.O.L. (Inches)	Life/ Hrs.	UPC	Pack
S29026*	9WLED/DW/RDL/5-6/27K/120V	9	120	83	2700K	700	100°	2 13/16	40K	045923290268	12/1
S29027*	9WLED/DW/RDL/5-6/30K/120V	9	120	83	3000K	700	100°	2 13/16	40K	045923290275	12/1
S29028*	9WLED/DW/RDL/5-6/40K/120V	9	120	83	4000K	700	100°	2 13/16	40K	045923290282	12/1
S29029*	9WLED/DW/RDL/5-6/50K/120V	9	120	83	5000K	700	100°	2 13/16	40K	045923290299	12/1

*** Consult Satco or visit www.satco.com for an up to date dimmer compatibility list.

6" & 8" 3000K Commercial recessed LED downlights

- Office
- Retail
- Hospitality
- Manufacturing
- Replace up to 2 x 18W CFLs per fixture
- External driver for simple retrofitting
- Quick connect for easy installation
- 120-277 range voltage circuit
- 0-10V dimming
- 90 CRI
- Wet location
- c-UL-us Classified
- Long life—50,000 hours
- ENERGY STAR certified*
- 5 Year warranty

Installs into existing frame-in kit.

Set of 3 retaining clips available.

6" & 8" 3000K Commercial LED Recessed Downlights

Item Number	Lamp Description	W	V	CRI	CCT	Lm	Bm	M.O.L. (Inches)	Life/ Hrs.	UPC	Pack/ Master
S9794*	20WLED/CDL/6/30K/120-277V	20	120-277	90	3000K	1500	40°	6	50K	045923097942	8/1
S9795*	30WLED/CDL/6/30K/120-277V	30	120-277	90	3000K	2000	40°	6	50K	045923097959	8/1
S9796*	20WLED/CDL/8/30K/120-277V	20	120-277	90	3000K	1500	40°	8	50K	045923097966	4/1
S9797*	30WLED/CDL/8/30K/120-277V	30	120-277	90	3000K	2000	40°	8	50K	045923097973	4/1

4", 6", 8" & 10" 4000K Commercial recessed LED downlights

- Residential/commercial
- Office
- Retail
- Hospitality
- Manufacturing
- Municipal/government
- Direct replacements for incandescent, Halogen and CFL technologies
- 4" Replaces up to 2x18 Watt CFLs uses only 15 Watts
- 6" Replaces up to 2x26 Watt CFLs uses only 25 Watts
- 8" Replaces up to 2x32 Watt CFLs or MH70 uses only 35 Watts
- 10" Replaces up to 2x42 Watt CFLs or MH70 uses only 50 Watts
- External driver for simple retrofitting
- Quick connect for easy installation
- 100-277 input voltage
- 0-10V dimming to 10%***
- 90 CRI
- Damp location
- IC rated
- c-UL-us Classified
- ENERGY STAR certified*
- 5 Year warranty

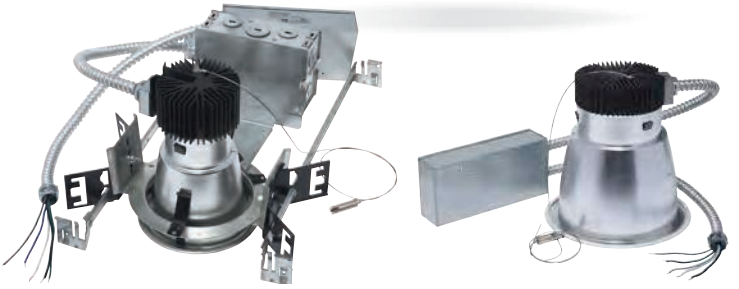

4" shown in mounting bracket

Installs into existing frame-in kit.

Set of 3 retaining clips available.

4", 6", 8" & 10" 4000K Commercial LED Recessed Downlights

Item Number	Lamp Description	W	V	CRI	CCT	Lm	Bm	M.O.L. (Inches)	Life/ Hrs.	UPC	Pack/ Master
S8705*	15WLED/CDL/4/4K/120-277	15	100-277	90	4000K	1020	40°	7 ¼	50K	045923087059	4/1
S8706*	25WLED/CDL/6/4K/120-277	25	100-277	90	4000K	1900	40°	7 ½	50K	045923087066	4/1
S8707*	35WLED/CDL/8/4K/120-277	35	100-277	90	4000K	2800	40°	8 11/16	50K	045923087073	4/1
S8708*	50WLED/CDL/10/4K/120-277	50	100-277	90	4000K	4000	40°	9 ¼	50K	045923087080	4/1

*** Visit www.satco.com for 0-10V dimmer compatibility

Commercial LED Recessed Downlight Brackets

Item Number	Description	UPC	Pack
80-936	MOUNT. PLATE/BARS 4" C-RDL/2PK	045923809361	2pk
80-937	MOUNT. PLATE/BARS 6" C-RDL/2PK	045923809378	2pk
80-938	MOUNT. PLATE/BARS 8" C-RDL/2PK	045923809385	2pk
80-939	MOUNT. PLATE/BARS 10" C-RDL/2PK	045923809392	2pk

12V LED recessed downlight retrofits

- Residential
- Office
- Retail
- Hospitality
- Dimmable
- Wet location listed
- Works with magnetic and electronic 12V transformers
- Long life—35,000 hours
- 5 Year warranty

Bi-Pin Adapter included

DIMMABLE WET LOCATION

12V LED Recessed Downlight Retrofits

Item Number	Lamp Description	W	V	Base	CRI	CCT	Lm	Bm	M.O.L. (Inches)	Life/ Hrs.	UPC	Pack
S9729	7.5WLED/RDL/4"BFL/12V 90CRI 3K	7.5	12	GU5.3	90	3000K	460	90°	2 ⅞	35K	045923097294	12/1

LED elevator lamps

- Elevator lighting
- Display lighting
- Non dimmable
- Long life—30,000 hours
- 3 Year warranty

Not for use with dimmers.
Recommended for use with magnetic transformers.
Compatibility with electronic transformers minimum load requirement must be verified.

S9005

S9004

LED Elevator Lamps

Item Number	Lamp Description	W	V	CRI	CCT	Lm	Bm	M.O.L. (Inches)	Life/ Hrs.	UPC	Pack
S9005	2W/GBF/LED/12V/BA15D	2	12	80	3000K	120	40°	1 ¾	30K	045923090059	48/12
S9004	3W/1383/LED/12V/BA15S	3	12	80	3000K	120	40°	2 ½	30K	045923090042	48/12

Indoor use only. Not for use in totally enclosed fixtures.

Hi-Pro LED A21 lamps

High lumen, A21 lamps for industrial and commercial applications

- For use in bollard and post top lighting
- High ceiling recessed lighting
- Replaces high lumen incandescent and CFL lamps
- Dimmable
- Damp location
- Saves over 80% on energy costs
- Advanced heat dissipation design
- Direct wire range voltage 120-277V options
- High efficiency—up to 150 LPW
- 2700K, 4000K and 5000K options
- Base up, base down or horizontal operation
- Long life—25,000 hours
- ENERGY STAR certified*
- 5 Year limited warranty***

Beam Profile

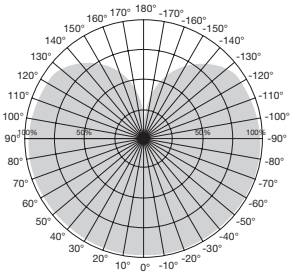

Beam Angle: 280°

High Lumen A21 Industrial/Commercial LED Lamps

DAMP LOCATION | DIMMABLE | ENCLOSED FIXTURE | * ENERGY STAR

Item Number	Lamp Description	W	V	CRI	CCT	Lm	Bm	M.O.L. (Inches)	Life/ Hrs.	UPC	Pack/ Master
Dimmable											
S8735*	20WA21/LED/HID/2700K/120V/DIM/E26	20	120	80+	2700K	2350	280°	5	25K	045923087356	24/6
S8778*	20WA21/LED/HID/4000K/120V/DIM/E26	20	120	80+	4000K	2747	280°	5	25K	045923087783	24/6
S8736*	20WA21/LED/HID/5000K/120V/DIM/E26	20	120	80+	5000K	2860	280°	5	25K	045923087363	24/6
Non-Dimmable											
S8737*	20WA21/LED/HID/2700K/120-277V/E26	20	120-277	80+	2700K	2450	280°	5	25K	045923087370	24/6
S8779*	20WA21/LED/HID/4000K/120-277V/E26	20	120-277	80+	4000K	2828	280°	5	25K	045923087790	24/6
S8738*	20WA21/LED/HID/5000K/120-277V/E26	20	120-277	80+	5000K	2910	280°	5	25K	045923087387	24/6
Accessories											
92-410	Mog to Med Socket Reducer									045923924064	10/1
80-929	Hard Wire Surge Protector									045923809293	100/1

*** See warranty for details.

Hi-Pro LED A23 & A25 lamps

- For use in bollard and post top lighting
- High ceiling recessed lighting
- Replaces high lumen incandescent and CFL lamps and up to 150W HID
- 25W - E26 and EX39 / up to 3500 lumens
- 35W - EX39 / up to 4900 lumens
- Saves over 80% on energy costs
- Advanced heat dissipation design
- Direct wire range voltage 120-277V
- High efficiency—up to 145 LPW
- 2700K, 4000K, 5000K and 6500K options
- Base up, base down or horizontal operation
- Damp location
- Long life—50,000 hours
- 5 Year limited warranty

S13100

S13104

Beam Profile

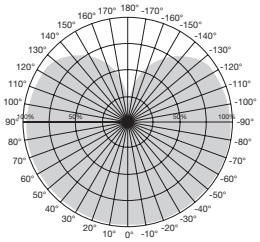

Beam Angle: 280°

High Lumen A23 & A25 Industrial/Commercial Lamps

DAMP LOCATION | ENCLOSED FIXTURE

Item Number	Lamp Description	W	V	CRI	CCT	Lm	Bm	M.O.L. (Inches)	Life/ Hrs.	UPC	Pack/ Mstr.
S13100*	25WA23/LED/HID/2700K/120-277V/E26	25	120-277V	80	2700K	3375	280°	6 ¼	50K	045923131004	24
S13101*	25WA23/LED/HID/4000K/120-277V/E26	25	120-277V	80	4000K	3575	280°	6 ¼	50K	045923131011	24
S13102*	25WA23/LED/HID/5000K/120-277V/E26	25	120-277V	80	5000K	3625	280°	6 ¼	50K	045923131028	24
S13103*	25WA23/LED/HID/6500K/120-277V/E26	25	120-277V	80	6500K	3650	280°	6 ¼	50K	045923131035	24
S13104**	25WA23/LED/HID/2700K/120-277V/EX39	25	120-277V	80	2700K	3375	280°	6 11/16	50K	045923131042	24
S13105**	25WA23/LED/HID/4000K/120-277V/EX39	25	120-277V	80	4000K	3575	280°	6 11/16	50K	045923131059	24
S13106**	25WA23/LED/HID/5000K/120-277V/EX39	25	120-277V	80	5000K	3625	280°	6 11/16	50K	045923131066	24
S13107**	25WA23/LED/HID/6500K/120-277V/EX39	25	120-277V	80	6500K	3550	280°	6 11/16	50K	045923131073	24
S13108**	35WA25/LED/HID/2700K/120-277V/EX39	35	120-277V	80	2700K	4500	280°	7 ¼	50K	045923131080	24
S13109**	35WA25/LED/HID/4000K/120-277V/EX39	35	120-277V	80	4000K	4725	280°	7 ¼	50K	045923131097	24
S13110**	35WA25/LED/HID/5000K/120-277V/EX39	35	120-277V	80	5000K	4900	280°	7 ¼	50K	045923131103	24
S13111**	35WA25/LED/HID/6500K/120-277V/EX39	35	120-277V	80	6500K	4950	280°	7 ¼	50K	045923131110	24

* ENERGY STAR® pending–May 2019. ** DLC listed pending–February 2019.

Hi-Pro LED lamps

High lumen, omni-directional lamps for industrial and commercial applications

- Replaces HID, CFL, and Incandescent
- Direct wire range voltage 100-277V
- Built-in surge protection 80-120W
- Approved for totally enclosed fixtures**
- IP65 rated
- 3 CCT options
- High bay/low bay/post top
- DLC listed*
- Long life—50,000 hours
- 5 Year limited warranty

S29390 S29392 S29394 S29397

WET LOCATION ENCLOSED FIXTURE *

High Lumen Industrial/Commercial LED Lamps

Item Number	Lamp Description	Replaces Inc/CFL/HID	W	V	Base Type	CCT	Lm	M.O.L. (Inches)	Life/ Hrs.	UPC	Pack/ Master
S29670	18W/LED/HID/2700K/100-277V	120/32/70	18	100-277	E26	2700K	2200	6 ⅞	50K	045923296703	48
S29390	18W/LED/HID/5000K/100-277V	120/32/70	18	100-277	E26	5000K	2700	6 ⅞	50K	045923293900	48
S9678	18W/LED/HID/AMBER/100-277V	—	18	100-277	E26	Amber	—	6 ⅞	50K	045923096785	48
S29671	22W/LED/HID/2700K/100-277V	150/40/100	22	100-277	E26	2700K	2680	7 11/16	50K	045923296710	48
S29391	22W/LED/HID/5000K/100-277V	150/40/100	22	100-277	E26	5000K	2950	7 11/16	50K	045923293917	48
S29672	36W/LED/HID/2700K/100-277V	200/55/150	36	100-277	E26	2700K	4390	9 ¼	50K	045923296727	12
S29392	36W/LED/HID/5000K/100-277V	200/55/150	36	100-277	E26	5000K	4800	9 ¼	50K	045923293924	12
S9489	36W/LED/HID/AMBER/100-277V	—	36	100-277	E26	Amber	—	9 ¼	50K	045923094897	12
S29673*	45W/LED/HID/4000K/120-277V	300/65/175	45	100-277	EX39	4000K	5850	10 ¾	50K	045923296734	12
S29393*	45W/LED/HID/5000K/100-277V	300/65/175	45	100-277	EX39	5000K	6000	10 ¾	50K	045923293931	12
S29674*	54W/LED/HID/4000K/120-277V	300/85/250	54	100-277	EX39	4000K	7020	10 ¾	50K	045923296741	12
S29394*	54W/LED/HID/5000K/100-277V	300/85/250	54	100-277	EX39	5000K	7200	10 ¾	50K	045923293948	12
S29675*	80W/LED/HID/4000K/120-277V	400/100/320	80	100-277	EX39	4000K	10400	9 ¼	50K	045923296758	6
S29395*	80W/LED/HID/5000K/100-277V	400/100/320	80	100-277	EX39	5000K	10640	9 ¼	50K	045923293955	6
S29676*	100W/LED/HID/4000K/100-277V	500/150/400	100	100-277	EX39	4000K	13000	9 ⅝	50K	045923296765	6
S29396*	100W/LED/HID/5000K/100-277V	500/150/400	100	100-277	EX39	5000K	13300	9 ⅝	50K	045923293962	6
S29677*	120W/LED/HID/4000K/100-277V	750/200/600	120	100-277	EX39	4000K	15600	10 ⅜	50K	045923296772	6
S29397*	120W/LED/HID/5000K/100-277V	750/200/600	120	100-277	EX39	5000K	16000	10 ⅜	50K	045923293979	6
Accessories											
92-410	Mog to Med Socket Reducer for S29390, S29391, S29392, S29670, S29671 and S29672									045923924064	
80-929	Hard Wire Surge Protector									045923809293	

** For minimum compartment size of enclosed fixture visit www.satco.com. Lamp life may vary depending on application and use. See warranty for details.

Hi-Pro 277-347V high lumen LED lamps

High lumen, omni-directional lamps for industrial and commercial applications

- Replaces HID, CFL, and Incandescent
- Direct wire range voltage 277-347V
- Built-in surge protection 80-120W
- Approved for totally enclosed fixtures**
- IP65 rated
- 5000K
- Beam angle 300°
- CRI 80+
- High bay/low bay/post top
- DLC listed*
- 5 Year limited warranty

S28710, S28711
S28712

S28713, S28714

S28715, S28716

S28717

High Lumen Industrial/Commercial 277-347V LED Lamps

Item Number	Lamp Description	Replaces Inc/CFL/HID	W	V	Base Type	CCT	Lm	M.O.L. (Inches)	Life/ Hrs.	UPC	Pk/ Mstr.
S28710	18W/LED/HID/5000K/277-347V/E26	120/32/70	18	277-347	E26	5000K	2400	6 ¾	40K	045923287107	48
S28711	22W/LED/HID/5000K/277-347V/E26	150/40/100	22	277-347	E26	5000K	2950	6 9/16	40K	045923287114	48
S28712	36W/LED/HID/5000K/277-347V/E26	200/55/150	36	277-347	E26	5000K	4800	9 3/16	40K	045923287121	12
S28713*	45W/LED/HID/5000K/277-347V/EX39	300/65/175	45	277-347	EX39	5000K	6000	10 11/16	40K	045923287138	12
S28714*	54W/LED/HID/5000K/277-347V/EX39	300/85/250	54	277-347	EX39	5000K	7200	10 11/16	40K	045923287145	12
S28715*	80W/LED/HID/5000K/277-347V/EX39	400/100/320	80	277-347	EX39	5000K	10640	9 ¼	40K	045923287152	4
S28716*	100W/LED/HID/5000K/277-347V/EX39	500/150/400	100	277-347	EX39	5000K	13300	9 ⅝	40K	045923287169	4
S28717*	120W/LED/HID/5000K/277-347V/EX39	750/200/600	120	277-347	EX39	5000K	16000	10 ⅜	40K	045923287176	4
Accessories											
92-410	Mog to Med Socket Reducer									045923924064	
80-935	Hard Wire Surge Protector									045923809354	

** For minimum compartment size of enclosed fixture visit www.satco.com. Lamp life may vary depending on application and use. See warranty for details.

Hi-Pro LED 12-24V low voltage lamps

Low voltage, high lumen, omni-directional lamps for industrial and commercial applications

- Replaces HID, CFL, and Incandescent
- Approved for totally enclosed fixtures**
- IP65 rated
- 5000K
- Long life—50,000 hours
- 5 Year limited warranty

S9753 S9754 S9755

High Lumen Industrial/Commercial LED Lamps - 12-24V

DAMP LOCATION ENCLOSED FIXTURE

Item Number	Lamp Description	Replaces INC/HID	W	V	Base Type	CCT	Lm	M.O.L. (Inches)	Life/ Hrs.	UPC	Pack
S9753	10W/LED/HID/5000K/12V-24V E26	90/30	10	12-24	E26	5000K	1200	5 13/16	50K	045923097539	48
S9754	14W/LED/HID/5000K/12V-24V E26	150/50	14	12-24	E26	5000K	1680	6 3/16	50K	045923097546	48
S9755	18W/LED/HID/5000K/12V-24V E26	200/70	18	12-24	E26	5000K	2160	7	50K	045923097553	48

** For minimum compartment size of enclosed fixture visit www.satco.com. Lamp life may vary depending on application and use. See warranty for details.

Hi-Pro LED lamps with motion sensor

High lumen, omni-directional lamps with adjustable motion sensor for industrial and commercial applications

- Replaces HID, CFL, and Incandescent
- Direct wire range voltage 100-277V
- Approved for totally enclosed fixtures**
- Microwave sensor
- 3000K, 5000K
- 5 Year limited warranty

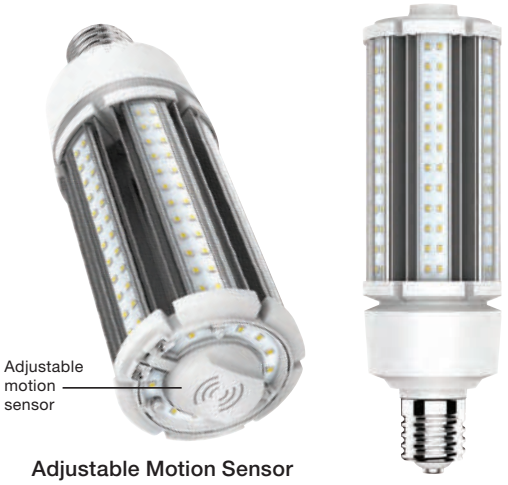

Adjustable Motion Sensor
Adjust the position and angle of the motion sensor according the fixtures.

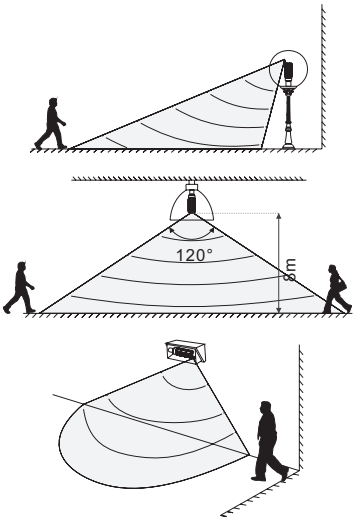

High Lumen Industrial/Commercial LED Lamps with Motion Sensors

WET LOCATION ENCLOSED FIXTURE *

Item Number	Lamp Description	Replaces Inc/CFL/HID	W	V	Base Type	CCT	Lm	M.O.L. (Inches)	Life/ Hrs.	UPC	Pk/ Mstr.
S8988	63W/LED/HID/3K/MS/100-277V	300/85/250	63	100-277	E39	3000K	7875	10 7/8	50K	045923089886	12
S8989	63W/LED/HID/5K/MS/100-277V	300/85/250	63	100-277	E39	5000K	7875	10 7/8	50K	045923089893	12

** For minimum compartment size of enclosed fixture visit www.satco.com. Lamp life may vary depending on application and use.

Hi-Pro LED shoe box lamp series

High lumen, directional lamps for industrial and commercial fixture applications

- For use in shoe box fixtures
- 80/110 Watt options (10,000/14,000 lm) replaces 250/400 Watt HID
- Replaces HID
- Approved for totally enclosed fixtures**
- Damp location
- Direct wire range voltage 100-277V
- Higher efficiency, improved heat dissipation
- 2 CCT options
- Expandable 180˚ beam design with adjustable base (E39)
- Horizontal operation
- DLC listed*
- Long life—50,000 hours
- 5 Year limited warranty

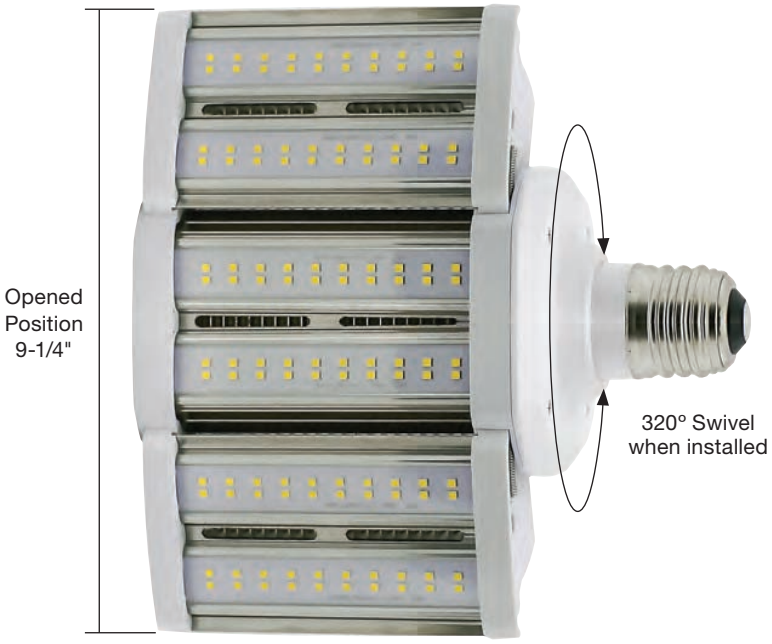

Closed setting for easy installation

Beam Profile

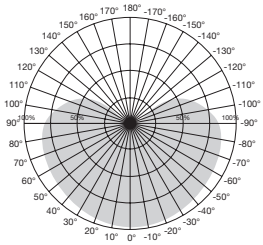

Beam Angle: 180° (opened)

High Lumen Industrial/Commercial LED Lamps

DAMP LOCATION | ENCLOSED FIXTURE | * DLC

Item Number	Lamp Description	W	V	Rpl.	Base Type	CCT	Lm	Bm	M.O.L. (Inches)	Life/ Hrs.	UPC	Pack
S8931*	80W/LED/HID/SB/3K/E39/100-277V	80	100-277	250W	E39	3000K	10000	180°	8 11/16	50K	045923089312	4
S8932*	80W/LED/HID/SB/5K/E39/100-277V	80	100-277	250W	E39	5000K	10000	180°	8 11/16	50K	045923089329	4
S8937*	110W/LED/HID/SB/3K/E39/100-277V	110	100-277	400W	E39	3000K	14000	180°	11 1/8	50K	045923089374	4
S8938*	110W/LED/HID/SB/5K/E39/100-277V	110	100-277	400W	E39	5000K	14000	180°	11 1/8	50K	045923089381	4
Accessories												
80-929	Hard Wire Surge Protector										045923809293	

** For minimum compartment size of enclosed fixture visit www.satco.com. Lamp life may vary depending on application and use. See warranty for details.

Hi-Pro LED wall pack lamp series

High lumen, directional lamps for industrial and commercial fixture applications

- For use in wall pack, canopy, shoe box, or cobra head fixtures
- 20/40/60 Watt options replaces 100/175/250 Watt HID
- Replaces HID
- Approved for totally enclosed fixtures**
- Direct wire range voltage 100-277V
- IP64, higher efficiency, improved heat dissipation
- Reduced size
- 180˚ beam/adjustable base (E26/E39)
- Horizontal operation
- DLC listed*
- Long life—50,000 hours
- 5 Year limited warranty

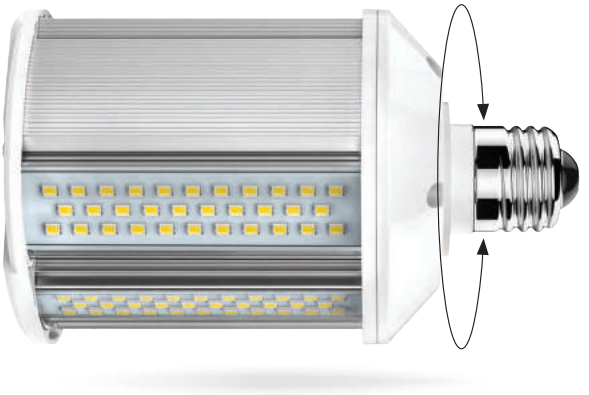

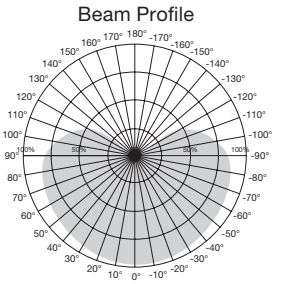

High Lumen Industrial/Commercial LED Lamps

DAMP LOCATION | ENCLOSED FIXTURE | *

Item Number	Lamp Description	W	V	Rpl.	Base Type	CCT	Lm	Bm	M.O.L. (Inches)	Life/ Hrs.	UPC	Pack
S8928	20W/LED/HID/WP/5K/E26/100-277V	20	100-277	100W	E26	5000K	3000	180°	5 ¼	50K	045923089282	12
S8929	40W/LED/HID/WP/5K/E26/100-277V	40	100-277	175W	E26	5000K	6000	180°	7 ⅞	50K	045923089299	12
S8930*	40W/LED/HID/WP/5K/E39/100-277V	40	100-277	175W	E39	5000K	6000	180°	8 ½	50K	045923089305	12
S8987*	60W/LED/HID/WP/5K/E39/100-277V	60	100-277	250W	E39	5000K	9000	180°	10 ¾	50K	045923089879	12
Accessories												
92-410	Mog to Med Socket Reducer for S9750										045923924064	
80-929	Hard Wire Surge Protector										045923809293	

** For minimum compartment size of enclosed fixture visit www.satco.com. Lamp life may vary depending on application and use. See warranty for details.

Hi-Pro LED multi-beam lamps

High lumen, adjustable, multi-directional lamps for industrial and commercial applications

- Replaces HID, CFL, and incandescent
- Direct wire range voltage 100-277V
- Approved for totally enclosed fixtures**
- High bay, low bay, hanging sockets, and post top
- 2700K or 5000K
- Light panels lock into place creating 3 separate beam angle options
- IP65 rated
- Long life—50,000 hours
- 5 Year limited warranty

360° Beam

270° Beam

180° Beam

High Lumen Multi-Beam Industrial/Commercial LED Lamps

WET LOCATION | ENCLOSED FIXTURE

Item Number	Lamp Description	Replaces Inc/CFL/HID	W	V	Base Type	CCT	Lm	CRI	M.O.L. (Inches)	Life/ Hrs.	UPC	Pack/ Master
S29768	30W/LED/HID/MB/2700K/100-277V	200/55/150	30	100-277	E26	2700K	3660	83	6 3/8	50K	045923297687	24
S29750	30W/LED/HID/MB/5000K/100-277V	200/55/150	30	100-277	E26	5000K	3900	83	6 3/8	50K	045923297502	24
S29798	40W/LED/HID/MB/2700K/100-277V	300/65/175	40	100-277	EX39	2700K	4880	83	7 7/8	50K	045923297984	12
S29751	40W/LED/HID/MB/5000K/100-277V	300/65/175	40	100-277	EX39	5000K	5200	83	7 7/8	50K	045923297519	12
S29799	60W/LED/HID/MB/2700K/100-277V	500/85/250	60	100-277	EX39	2700K	7320	83	8 9/16	50K	045923297991	12
S29752	60W/LED/HID/MB/5000K/100-277V	500/85/250	60	100-277	EX39	5000K	7800	83	8 9/16	50K	045923297526	12
S29769	75W/LED/HID/MB/5000K/100-277V	750/105/400	75	100-277	EX39	5000K	9800	80+	8 5/8	50K	045923297694	12
S29679	90W/LED/HID/MB/5000K/100-277V	750/200/600	90	100-277	EX39	5000K	11700	80+	8 5/8	50K	045923296796	4
Accessories												
92-410	Mog to Med Socket Reducer for S29750, S29768 and S29750										045923924064	
80-929	Hard Wire Surge Protector										045923809293	

** For minimum compartment size of enclosed fixture visit www.satco.com. Lamp life may vary depending on application and use. See warranty for details.

PATENT PENDING

Hi-Pro LED high bay/low bay "power flood" lamps

High lumen, LED lamps for industrial and commercial applications

- Replaces HID, CFL, and Incandescent
- 120° beam angle
- Long neck option fits more fixtures
- Direct wire range voltage 120-277V
- Light weight
- Advanced passive heat dissipation
- DLC listed*
- Long life—50,000 hours
- 5 Year limited warranty

Beam Profile

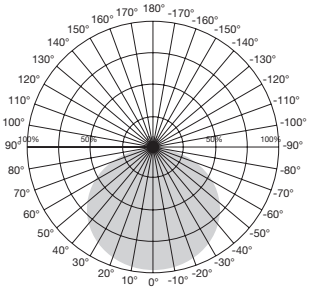

Beam Angle 120°

120-277V | 120° BEAM | * DLC

High Lumen Industrial/Commercial LED Lamps

Item Number	Lamp Description	Replaces INC/CFL/HID	W	V	Base Type	CRI	CCT	Lm	Bm	M.O.L. (Inches)	Life/ Hrs.	UPC	Pack/ Mstr.
S8776*	60W/LED/HID-HB/5000K/120-277V	500/150/250	60	120-277	E39	80+	5000K	7200	120°	9 ⅛	50K	045923087769	6
S8777*	75W/LED/HID-HB/5000K/120-277V	750/200/400	75	120-277	E39	80+	5000K	9010	120°	10 13/16	50K	045923087776	4
Accessories													
80-929	HARD WIRE SURGE PROTECTOR											045923809293	

Hi-Pro LED post top lamps

- For use in any post top fixture to provide light out and down only
- Direct wire (ballast by-pass) 100-277V / E26
- Approved for enclosed fixtures**
- Long life—50,000 hours
- 5 Year limited warranty

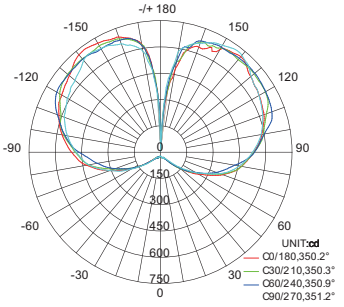

Controls light pollution

ENCLOSED FIXTURE

High Lumen LED Lamps

Item Number	Lamp Description	W	V	Base Type	CRI	CCT	Lm	M.O.L. (Inches)	Life/ Hrs.	UPC	Pack/ Mstr.
S9779	40W/LED/HID/PT/3000K/100-277V	40	100-277	E26	80+	3000K	5000	5 ½	50K	045923097799	12
Accessories											
92-410	Mog to Med Socket Reducer									045923924064	
80-929	Hard Wire Surge Protector									045923809293	

** See warranty for details.

Hi-Pro LED PAR30 lamps

High lumen, PAR lamps for industrial and commercial applications

- Replaces Halogen and ceramic metal Halide lamps
- Saves over 80% on energy costs
- Direct wire range voltage 100-277V
- High efficiency—100LPW
- 3000 and 4000K options
- Base up, base down or horizontal operation
- Long life—50,000 hours
- ENERGY STAR certified*
- 5 Year limited warranty

S9762, S9763

S9764, S9765

Beam Profile

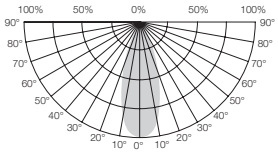

Beam Angle: 25°

Illumination

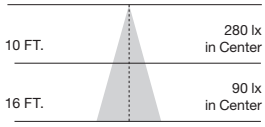

Beam Angle : 25°

High Lumen PAR30 Industrial/Commercial LED Lamps

Item Number	Lamp Description	W	V	CRI	CCT	Lm	Bm	M.O.L. (Inches)	Life/ Hrs.	UPC	Pack/ Master
S9762*	12W/LED/PAR30/SN/3K/100-277V	12	100-277	83	3000K	1200	25°	3 ½	50K	045923097621	24/6
S9763*	12W/LED/PAR30/SN/4K/100-277V	12	100-277	83	4000K	1200	25°	3 ½	50K	045923097638	24/6
S9764*	12W/LED/PAR30/LN/3K/100-277V	12	100-277	83	3000K	1200	25°	4 5/16	50K	045923097645	24/6
S9765*	12W/LED/PAR30/LN/4K/100-277V	12	100-277	83	4000K	1200	25°	4 5/16	50K	045923097652	24/6
Accessories											
80-929	HARD WIRE SURGE PROTECTOR									045923809293	

Hi-Pro LED PAR38 lamps

High lumen, PAR lamps for industrial and commercial applications

- Replaces Halogen and ceramic metal Halide lamps
- Saves over 80% on energy costs
- Direct wire range voltage 100-277V
- High efficiency—over 100LPW
- 3000 and 4000K options
- Base up, base down or horizontal operation
- Long life—50,000 hours
- ENERGY STAR certified*
- 5 Year limited warranty

Beam Profile

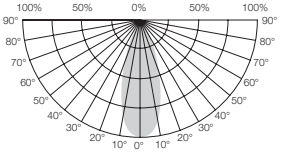

Beam Angle: 25°

Illumination

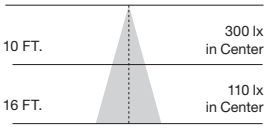

Beam Angle : 25°

High Lumen PAR38 Industrial/Commercial LED Lamps

Item Number	Lamp Description	W	V	CRI	CCT	Lm	Bm	M.O.L. (Inches)	Life/ Hrs.	UPC	Pack/ Master
S9760*	18W/LED/PAR38/3000K/100-277V	18	100-277	83	3000K	1950	25°	5 1/16	50K	045923097607	12/6
S9761*	18W/LED/PAR38/4000K/100-277V	18	100-277	83	4000K	2000	25°	5 1/16	50K	045923097614	12/6
Accessories											
80-929	HARD WIRE SURGE PROTECTOR									045923809293	

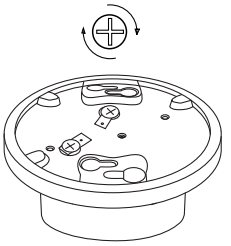

E39 Mogul Base

Instant hi-bay fixture

Keyless porcelain mogul base lamp holder with screw terminals

- Perfect for use with LED HID replacement lamps
- Commercial/industrial applications
- Screw-in eye hook for safety cable included
- Holder rated at 1500W Max.
- 600V
- Max lamp weight 5 lbs.

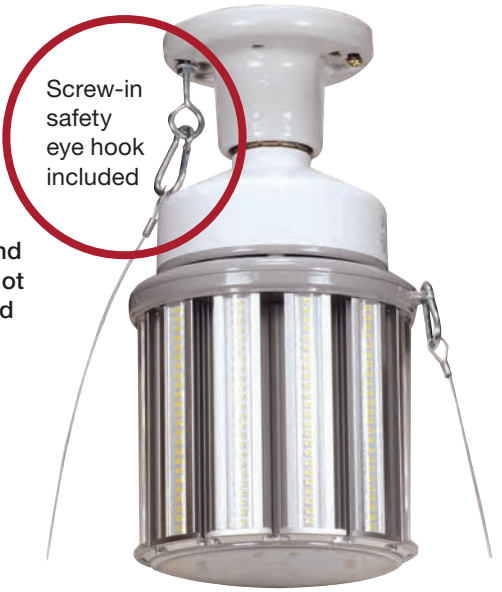

Lamp and cables not included

Keyless Porcelain Mogul Base Lamp Holder

MOGUL BASE | 1500 WATTS | 600 VOLT | c UL us LISTED

Item Number	Lamp Description	Max. W	Max. V	UPC	Pack
90-483	Keyless Mogul Lamp Holder	1500	600	045923904837	40

Hi-Pro LED temporary hi-bay caged lamp series

High lumen, omni-directional lamps for industrial and commercial applications

- For use in any commercial work area replacing HID, CFL and Incandescent
- 60/100/150 Watt options (up to 15,000 lm)
- Includes 3' power cord/plug
- Portable
- Outlet for connecting multiple lamps
- Remote control "on/off"
- Cage is redesigned to be free standing with additional support
- IP64, higher efficiency, improved heat dissipation
- 360˚ Omni-directional light
- Damp location
- Long life—50,000 hours
- 5 Year limited warranty

S28939 S28946 S28975

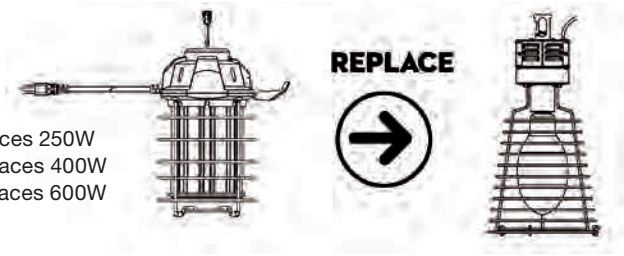

60W Replaces 250W
100W Replaces 400W
150W Replaces 600W

Linkable
60Wx10 pcs. max
100Wx6 pcs. max
150Wx4 pcs. max
600W max

Beam Profile

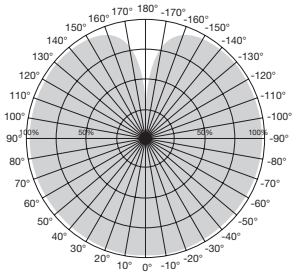

Beam Angle: 360°

High Lumen Industrial/Commercial LED Lamps

DAMP LOCATION

Item Number	Lamp Description	Replaces	W	V	CRI	CCT	Lm	Bm	M.O.L. (Inches)	Life/ Hrs.	UPC	Pack
S28939	60W/LED/HID/TEMP/5K/RC/120V	250W	60	120	85	5000K	6000	360°	10 11/16	50K	045923289392	4
S28946	100W/LED/HID/TEMP/5K/RC/120V	400W	100	120	85	5000K	10000	360°	12	50K	045923289460	4
S28975	150W/LED/HID/TEMP/5K/RC/120V	600W	150	120	85	5000K	15000	360°	13 3/8	50K	045923289750	4

Hi-Pro LED temporary string light series

High lumen, omni-directional string lights for industrial and commercial applications

- For use in any commercial work area
- 5 lamps per string
- 20W / 2000 lumens per lamp (100W)
- 10' between lamps (50' per string)
- Replaces HID, CFL, and Incandescent
- 360˚ Omni-directional light
- Direct wire 120V
- Wet location
- IP65 - Water and dust proof
- Long life—50,000 hours
- 3 Year limited warranty

Beam Profile - Each Lamp

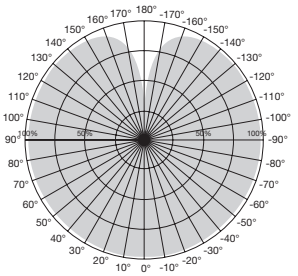

Beam Angle: 360°

WET LOCATION

High Lumen Industrial/Commercial LED String Light

Item Number	Lamp Description	W	V	CRI	Base Type	CCT	Lm	Bm	M.O.L. (Inches)	Life/ Hrs.	UPC	Pack
S8976	100W/LED/5PC/TEMP/STRING/120V	100	120	85	String/Plug	5000K	10000	360°	6 ⅝	50K	045923089763	1

PL/LED ballast bypass replacement lamps

- **UL Classified**
- 2-pin replacement for up to 26 Watt pin based CFL, uses only 9 Watts
- 2-pin LED lamps works in both 2-pin (magnetic) and 4-pin (electronic) sockets
  - G24d (2-pin)—18 and 26W rep.
  - G24q (4-pin)—13, 18, and 26 rep.
- Direct wire 120-277V
- Instant on to full brightness / no flickering
- Rotates up to 270° for various fixture applications
- Vertical and horizontal options
- Up to 70% energy saving
- Damp location
- Long life—50,000 hours
- 5 Year warranty

S8530, S8531, S8532, S8533, S8534

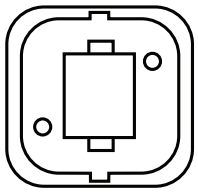

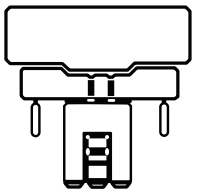

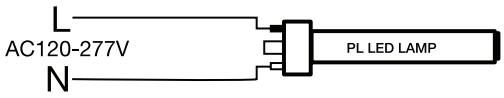

S8535, S8536, S8537,
S8538, S8539

PL/LED Replacement Lamps

DAMP LOCATION | BALLAST BYPASS | CLASSIFIED c UL us

Item Number	Lamp Description	W	Base Type	CCT	CRI	M.O.L. (Inches)	Lm	Life/ Hrs.	UPC	Pack/ Master
S8530	9WPLH/LED/827/BP/2P	9	G24d	2700K	82	6 5/8	900	50K	045923085307	50/10
S8531	9WPLH/LED/830/BP/2P	9	G24d	3000K	82	6 5/8	950	50K	045923085314	50/10
S8532	9WPLH/LED/835/BP/2P	9	G24d	3500K	82	6 5/8	950	50K	045923085321	50/10
S8533	9WPLH/LED/840/BP/2P	9	G24d	4000K	82	6 5/8	1000	50K	045923085338	50/10
S8534	9WPLH/LED/850/BP/2P	9	G24d	5000K	82	6 5/8	1000	50K	045923085345	50/10
S8535	9WPLV/LED/827/BP/2P	9	G24d	2700K	82	4 11/16	900	50K	045923085352	50/10
S8536	9WPLV/LED/830/BP/2P	9	G24d	3000K	82	4 11/16	950	50K	045923085369	50/10
S8537	9WPLV/LED/835/BP/2P	9	G24d	3500K	82	4 11/16	950	50K	045923085376	50/10
S8538	9WPLV/LED/840/BP/2P	9	G24d	4000K	82	4 11/16	1000	50K	045923085383	50/10
S8539	9WPLV/LED/850/BP/2P	9	G24d	5000K	82	4 11/16	1000	50K	045923085390	50/10

LED/CFL direct replacement lamps

4-pin (electronic ballasts)
2-pin (magnetic ballasts)

- 4-pin 26, 32, 42 Watt direct replacement
- 2-pin 26 Watt direct replacement
- 4-pin lamps fit G24q-3 & GX24q-3 and GX24q-4 sockets
- 2-pin lamps fit G24d-3 sockets
- No re-wiring needed
- Instant on to full brightness / no flickering
- Vertical and horizontal options
- Up to 70% energy saving
- DLC listed* (4-pin only)
- c-UL-us listed
- Long life—50,000 hours
- 5 Year warranty

S29858, S29859, S29860, S29861
G24Q

S9862, S9863, S9864, S9865
G24D

Rotates 270° when installed

S29850, S29851, S29852, S29853
G24Q

S9854, S9855, S9856, S9857
G24D

LED/CFL Replacement Lamps

Item Number	Lamp Description	W	Base Type	CCT	CRI	M.O.L. (Inches)	Lm	Life/ Hrs.	UPC	Pack/ Master
4-Pin Horizontal										
S29850*	9WPLH/LED/830/DR/4P	9	G24Q	3000K	82	6 ⅝	950	50K	045923298509	50/10
S29851*	9WPLH/LED/835/DR/4P	9	G24Q	3500K	82	6 ⅝	950	50K	045923298516	50/10
S29852*	9WPLH/LED/840/DR/4P	9	G24Q	4000K	82	6 ⅝	900	50K	045923098529	50/10
S29853*	9WPLH/LED/850/DR/4P	9	G24Q	5000K	82	6 ⅝	900	50K	045923298530	50/10
2-Pin Horizontal										
S9854	9WPLH/LED/830/DR/2P	9	G24D	3000K	82	6 ⅝	850	50K	045923098543	50/10
S9855	9WPLH/LED/835/DR/2P	9	G24D	3500K	82	6 ⅝	850	50K	045923098550	50/10
S9856	9WPLH/LED/840/DR/2P	9	G24D	4000K	82	6 ⅝	900	50K	045923098567	50/10
S9857	9WPLH/LED/850/DR/2P	9	G24D	5000K	82	6 ⅝	900	50K	045923098574	50/10
4-Pin Vertical										
S29858*	9WPLV/LED/830/DR/4P	9	G24Q	3000K	82	4 11/16	950	50K	045923298585	50/10
S29859*	9WPLV/LED/835/DR/4P	9	G24Q	3500K	82	4 11/16	950	50K	045923298592	50/10
S29860*	9WPLV/LED/840/DR/4P	9	G24Q	4000K	82	4 11/16	900	50K	045923298608	50/10
S29861*	9WPLV/LED/850/DR/4P	9	G24Q	5000K	82	4 11/16	900	50K	045923298615	50/10
2-Pin Vertical										
S9862	9WPLV/LED/830/DR/2P	9	G24D	3000K	82	4 11/16	850	50K	045923098628	50/10
S9863	9WPLV/LED/835/DR/2P	9	G24D	3500K	82	4 11/16	850	50K	045923098635	50/10
S9864	9WPLV/LED/840/DR/2P	9	G24D	4000K	82	4 11/16	900	50K	045923098642	50/10
S9865	9WPLV/LED/850/DR/2P	9	G24D	5000K	82	4 11/16	900	50K	045923098659	50/10

LED/CFL ballast bypass replacement lamps

2-Pin GX23 ballast bypass GU24 Base, E26 Base

- 2-Pin 13 Watt CFL direct replacement
- GU24 Base and E26 Base are 13-18 Watt CFL and 60 Watt incandescent direct replacements
- Instant on to full brightness / no flickering
- Rotates up to 270° for various fixture applications
- Vertical and horizontal options
- Up to 70% energy saving
- c-UL-us Classified—2-Pin ballast bypass
- c-UL-us listed—GU24 base, E26 base
- Long life—50,000 hours
- 5 Year warranty

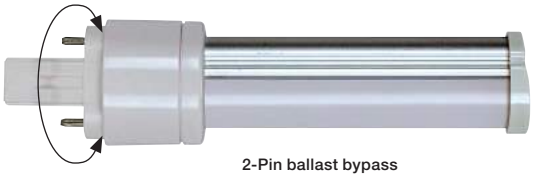

2-Pin ballast bypass
S8725, S8726, S8728, S8729

Rotates 270° when installed

GU24
S8745, S8746, S8747, S4748, S8749

E26
S8755, S8756, S8757, S4758, S8759

LED/CFL Replacement Lamps

Item Number	Lamp Description	W	V	Base Type	CCT	CRI	M.O.L. (Inches)	Lm	Life/ Hrs.	UPC	Pack/ Master
2-Pin Ballast Bypass—c-UL-us Classified											
S8725	6W/H/LED/CFL/827/2P/BP	6	120-277V	GX23	2700K	83	5 ¾	570	50K	045923087257	50/10
S8726	6W/H/LED/CFL/830/2P/BP	6	120-277V	GX23	3000K	83	5 ¾	570	50K	045923087264	50/10
S8727	6W/H/LED/CFL/835/2P/BP	6	120-277V	GX23	3500K	83	5 ¾	600	50K	045923087271	50/10
S8728	6W/H/LED/CFL/840/2P/BP	6	120-277V	GX23	4000K	83	5 ¾	600	50K	045923087288	50/10
S8729	6W/H/LED/CFL/850/2P/BP	6	120-277V	GX23	5000K	83	5 ¾	600	50K	045923087295	50/10
GU24 Base—c-UL-us listed											
S8745	8W/H/LED/CFL/827/GU24	8	120-277V	GU24	2700K	83	6 ⅓	920	50K	045923087455	50/10
S8746	8W/H/LED/CFL/830/GU24	8	120-277V	GU24	3000K	83	6 ⅓	920	50K	045923087462	50/10
S8747	8W/H/LED/CFL/835/GU24	8	120-277V	GU24	3500K	83	6 ⅓	960	50K	045923087479	50/10
S8748	8W/H/LED/CFL/840/GU24	8	120-277V	GU24	4000K	83	6 ⅓	960	50K	045923087486	50/10
S8749	8W/H/LED/CFL/850/GU24	8	120-277V	GU24	5000K	83	6 ⅓	960	50K	045923087493	50/10
E26 Base—c-UL-us listed											
S8755	8W/H/LED/CFL/827/E26	8	120-277V	E26	2700K	83	6 13/16	920	50K	045923087554	50/10
S8756	8W/H/LED/CFL/830/E26	8	120-277V	E26	3000K	83	6 13/16	920	50K	045923087561	50/10
S8757	8W/H/LED/CFL/835/E26	8	120-277V	E26	3500K	83	6 13/16	960	50K	045923087578	50/10
S8758	8W/H/LED/CFL/840/E26	8	120-277V	E26	4000K	83	6 13/16	960	50K	045923087585	50/10
S8759	8W/H/LED/CFL/850/E26	8	120-277V	E26	5000K	83	6 13/16	960	50K	045923087592	50/10

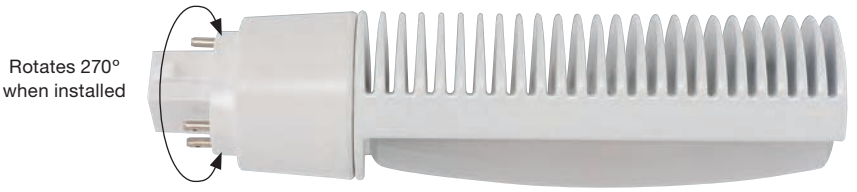

S21400, S21401, S21402, S21403

S21404, S21405, S21406, S21407

LED/CFL direct replacement lamps

4-pin (electronic ballasts)

- UL listed 4-pin 42 Watt direct replacement
- 4-pin lamps fit GX24q-4 sockets
- No re-wiring needed
- Instant on to full brightness / no flickering
- Vertical and horizontal options
- DLC Listed*
- c-UL-us listed
- Up to 60% energy saving
- Long life—50,000 hours
- 5 Year warranty

LED/CFL Replacement Lamps - Ballast Compatible♦

Item Number	Lamp Description	W	Base Type	CCT	CRI	M.O.L. (Inches)	Lm	Life/ Hrs.	UPC	Pk./ Mstr.
S21400*	PLT/16W/H/LED/830/4P/DR	16	G24Q	3000K	82	5 ¾	1750	50K	045923224003	20
S21401*	PLT/16W/H/LED/835/4P/DR	16	G24Q	3500K	82	5 ¾	1750	50K	045923224010	20
S21402*	PLT/16W/H/LED/840/4P/DR	16	G24Q	4000K	82	5 ¾	1850	50K	045923224027	20
S21403*	PLT/16W/H/LED/850/4P/DR	16	G24Q	5000K	82	5 ¾	1850	50K	045923224034	20
S21404*	PLT/16W/V/LED/830/4P/DR	16	G24Q	3000K	82	6 ½	1750	50K	045923224041	20
S21405*	PLT/16W/V/LED/835/4P/DR	16	G24Q	3500K	82	6 ½	1750	50K	045923224058	20
S21406*	PLT/16W/V/LED/840/4P/DR	16	G24Q	4000K	82	6 ½	1850	50K	045923224065	20
S21407*	PLT/16W/V/LED/850/4P/DR	16	G24Q	5000K	82	6 ½	1850	50K	045923224072	20

♦ Visit www.satco.com for ballast compatibility list.

Satco 2G11 23W LED/CFL replacement lamps

Ballast bypass replacement for 4-pin 40W PL-L

- Direct wire 120-277V
- All glass tube
- Over 40% energy savings
- Instant on to full brightness/no flickering
- Damp location
- NSF certified
- c-UL-us Classified
- Long life—50,000 hours
- 5 Year warranty

Wiring diagram

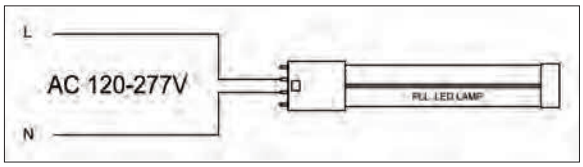

Satco 2G11 23W LED/CFL Replacement Lamps

Item Number	Lamp Description	W	CRI	Base Type	CCT	Lm	M.O.L. (Inches)	Life/ Hrs.	UPC	Pack
S9950*	23PLL/LED/835/BP	23	82	2G11	3500K	2600	22 ½	50K	045923099502	10
S9951*	23PLL/LED/840/BP	23	82	2G11	4000K	2800	22 ½	50K	045923099519	10

Satco 2', 3' & 6" U-bend LED T8 lamps

Direct replacement for linear or U-bend T8 fluorescent lamps in existing fixtures with instant or rapid start ballasts. No rewiring required♦

- Over 40% energy savings vs. standard T8 systems
- All glass tube
- Direct replacement solution allows the fixture to maintain the Original UL and CSA Compliance
- Compatible with emergency ballasts (2' & 3')♦♦
- Integrated thermal fuse at pins
- Damp location
- DLC listed*
- NSF certified
- c-UL-us listed
- Long life—50,000 hours
- 5 Year warranty

BALLAST DAMP LOCATION c UL us LISTED * DLC

LED T8 2', 3' & 6" U-Bend Ballast Compatible

Item Number	Lamp Description	W	CRI	Base Type	Bm	CCT	Lm	M.O.L. (Inches)	Life/ Hrs.	UPC	Pack
2' LED T8♦♦											
S9946*	8T8/LED/24-830/DR	8	82	Med Bi-Pin	220°	3000K	1200	24	50K	045923099465	10
S9947*	8T8/LED/24-835/DR	8	82	Med Bi-Pin	220°	3500K	1200	24	50K	045923099472	10
S9948*	8T8/LED/24-840/DR	8	82	Med Bi-Pin	220°	4000K	1250	24	50K	045923099489	10
S9949*	8T8/LED/24-850/DR	8	82	Med Bi-Pin	220°	5000K	1250	24	50K	045923099496	10
3' LED T8♦♦											
S29990*	10T8/LED/36-830/DR	10	82	Med Bi-Pin	220°	3000K	1400	36	50K	045923099908	10
S29991*	10T8/LED/36-835/DR	10	82	Med Bi-Pin	220°	3500K	1400	36	50K	045923099915	10
S29992*	10T8/LED/36-840/DR	10	82	Med Bi-Pin	220°	4000K	1450	36	50K	045923099922	10
S29993*	10T8/LED/36-850/DR	10	82	Med Bi-Pin	220°	5000K	1450	36	50K	045923099939	10
U-Bend 6" LED T8											
S9994*	11.5T8U6/LED/22.5-830/DR	11.5	82	Med Bi-Pin	230°	3000K	1700	22.5	50K	045923099946	12
S9995*	11.5T8U6/LED/22.5-835/DR	11.5	82	Med Bi-Pin	230°	3500K	1700	22.5	50K	045923099953	12
S9996*	11.5T8U6/LED/22.5-840/DR	11.5	82	Med Bi-Pin	230°	4000K	1800	22.5	50K	045923099960	12
S9997*	11.5T8U6/LED/22.5-850/DR	11.5	82	Med Bi-Pin	230°	5000K	1800	22.5	50K	045923099977	12

♦ May not be compatible with all ballasts. Visit www.satco.com for an approved list.
♦♦ 2' & 3' May not be compatible with all rapid start and emergency ballasts. Visit www.satco.com for an approved list.

Satco 12W, 4' LED T8 lamps

Direct replacement for linear fluorescent T8 lamps in existing fixtures with instant or rapid start ballasts. No rewiring required♦♦

- Over 40% energy savings vs. standard 4' T8 systems
- All glass tube
- Compatible with emergency♦ & dimming ballasts♦♦
- Integrated thermal fuse at pins
- Damp location
- c-UL-us listed
- NSF certified
- DLC listed*
- Long life—50,000 hours
- 5 Year warranty

LED T8 Ballast Compatible

Item Number	Lamp Description	W	CRI	Base Type	Bm	CCT	Lm	M.O.L. (Inches)	Life/ Hrs.	UPC	Pack
S29934*	12T8/LED/48-830/DR	12	82	G13	210°	3000K	1700	48	50K	045923299346	10
S29935*	12T8/LED/48-835/DR	12	82	G13	210°	3500K	1700	48	50K	045923299353	10
S29936*	12T8/LED/48-840/DR	12	82	G13	210°	4000K	1800	48	50K	045923299360	10
S29937*	12T8/LED/48-850/DR	12	82	G13	210°	5000K	1800	48	50K	045923299377	10

♦ May not be compatible with all instant start and rapid start ballasts. Visit www.satco.com for an approved list.

LED T8 Ballast Compatible

Item Number	Lamp Description	W	CRI	Base Type	Bm	CCT	Lm	M.O.L. (Inches)	Life/ Hrs.	UPC	Pack
Dimmable♦♦											
S29938*	12T8/LED/48-830/DR-DM	12	82	G13	210°	3000K	1700	48	50K	045923299384	10
S29939*	12T8/LED/48-835/DR-DM	12	82	G13	210°	3500K	1700	48	50K	045923299391	10
S29940*	12T8/LED/48-840/DR-DM	12	82	G13	210°	4000K	1800	48	50K	045923299407	10
S29941*	12T8/LED/48-850/DR-DM	12	82	G13	210°	5000K	1800	48	50K	045923299414	10

♦♦ May not be compatible with all instant start, rapid start, dimmable, and emergency ballasts. Visit www.satco.com for an approved list.
* DLC Listed

Satco 15W, 4' LED T8 lamps

Direct replacement for linear fluorescent T8 lamps in existing fixtures with instant or rapid start ballasts. No rewiring required♦

- Over 40% energy savings vs standard 4' T8 systems
- All glass tube
- Direct replacement solution allows the fixture to maintain the Original UL and CSA Compliance
- Integrated thermal fuse at pins
- Damp location
- c-UL-us listed
- DLC listed*
- Long life—50,000 hours
- 5 Year warranty

BALLAST DAMP LOCATION c UL us LISTED *DLC

LED T8 Ballast Compatible

Item Number	Lamp Description	W	CRI	Base Type	Bm	CCT	Lm	M.O.L. (Inches)	Life/ Hrs.	UPC	Pack
S29975*	15T8/LED/48-830/DR	15	80	Med Bi-Pin	220°	3000K	2100	48	50K	045923099755	10
S29976*	15T8/LED/48-835/DR	15	80	Med Bi-Pin	220°	3500K	2100	48	50K	045923099762	10
S29977*	15T8/LED/48-840/DR	15	80	Med Bi-Pin	220°	4000K	2200	48	50K	045923099779	10
S29978*	15T8/LED/48-850/DR	15	80	Med Bi-Pin	220°	5000K	2200	48	50K	045923099786	10

♦ May not be compatible with all instant start and rapid start ballasts. Visit www.satco.com for an approved list.

Linear LED ballast bypass T8 series

Double ended wiring

- **Works with existing sockets –shunted or non-shunted**
- Reduces labor costs for installation
- Built-in shock resistant circuit (not hot until both ends are installed)
- No ballast or external driver required
- Direct wire 120-277V line voltage
- All glass tube
- Approved for use with tube guards
- Damp location
- c-UL-us Classified
- DLC Listed
- Long life—50,000 hours
- 5 Year warranty

Double Ended Wiring Diagram

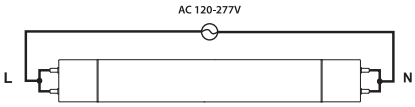

BALLAST BYPASS

DAMP LOCATION

c UL us CLASSIFIED

DLC

LED T8 Ballast Bypass

Item Number	Lamp Description	W	CRI	Base Type	Bm	CCT	Lm	M.O.L. (Inches)	Life/ Hrs.	UPC	Pack
9W, 2'											
S29900	9T8/LED/24-830/BP 120-277V	9	82	Med Bi-Pin	220°	3000K	1100	24	50K	045923299001	25
S29901	9T8/LED/24-835/BP 120-277V	9	82	Med Bi-Pin	220°	3500K	1100	24	50K	045923299018	25
S29902	9T8/LED/24-840/BP 120-277V	9	82	Med Bi-Pin	220°	4000K	1150	24	50K	045923299025	25
S29903	9T8/LED/24-850/BP 120-277V	9	82	Med Bi-Pin	220°	5000K	1150	24	50K	045923299032	25
12W, 3'											
S29926	12T8/LED/36-830/BP 120-277V	12	82	Med Bi-Pin	220°	3000K	1400	36	50K	045923299261	25
S29927	12T8/LED/36-835/BP 120-277V	12	82	Med Bi-Pin	220°	3500K	1400	36	50K	045923299278	25
S29928	12T8/LED/36-840/BP 120-277V	12	82	Med Bi-Pin	220°	4000K	1450	36	50K	045923299285	25
S29929	12T8/LED/36-850/BP 120-277V	12	82	Med Bi-Pin	220°	5000K	1450	36	50K	045923299292	25
14W, 4'											
S29913	14T8/LED/48-830/BP 120-277V	14	82	Med Bi-Pin	220°	3000K	1800	48	50K	045923299131	25
S29914	14T8/LED/48-835/BP 120-277V	14	82	Med Bi-Pin	220°	3500K	1800	48	50K	045923299148	25
S29915	14T8/LED/48-840/BP 120-277V	14	82	Med Bi-Pin	220°	4000K	1800	48	50K	045923299155	25
S29916	14T8/LED/48-850/BP 120-277V	14	82	Med Bi-Pin	220°	5000K	1800	48	50K	045923299162	25
17W, 4'											
S29904	17T8/LED/48-830/BP 120-277V	17	82	Med Bi-Pin	220°	3000K	2100	48	50K	045923299049	25
S29905	17T8/LED/48-835/BP 120-277V	17	82	Med Bi-Pin	220°	3500K	2100	48	50K	045923299056	25
S29906	17T8/LED/48-840/BP 120-277V	17	82	Med Bi-Pin	220°	4000K	2200	48	50K	045923299063	25
S29907	17T8/LED/48-850/BP 120-277V	17	82	Med Bi-Pin	220°	5000K	2200	48	50K	045923299070	25

15W Linear LED ballast bypass T8 series

Direct wire replacement for linear fluorescent T8 lamps in existing fixtures. Single ended wiring/non-shunted sockets.

- **Single ended wiring/non-shunted sockets**
- No ballast or external driver required
- Direct wire 120-277V line voltage**
- All glass tube
- Damp location
- c-UL-us Classified
- DLC listed*
- Long life—50,000 hours
- 5 Year warranty

Single Ended Wiring Diagram

Wiring harnesses available including non-shunted sockets, sold separately	
Item Number	Description
80/2626	1 LT BALLAST BYPASS WIRING HARNESS
80/2627	2 LT BALLAST BYPASS WIRING HARNESS
80/2628	3 LT BALLAST BYPASS WIRING HARNESS
80/2629	4 LT BALLAST BYPASS WIRING HARNESS

BALLAST BYPASS · DAMP LOCATION · CLASSIFIED c UL us · DLC *

LED T8 Ballast Bypass

Item Number	Lamp Description	W	CRI	Base Type	Bm	CCT	Lm	M.O.L. (Inches)	Life/ Hrs.	UPC	Pack
S9720*	15T8/LED/48-830/BP	15	82	Med Bi-Pin	230°	3000K	1700	48	50K	045923097201	10
S9721*	15T8/LED/48-835/BP	15	82	Med Bi-Pin	230°	3500K	1700	48	50K	045923097218	10
S9722*	15T8/LED/48-840/BP	15	82	Med Bi-Pin	230°	4000K	1800	48	50K	045923097225	10
S9723*	15T8/LED/48-850/BP	15	82	Med Bi-Pin	230°	5000K	1800	48	50K	045923097232	10

** Install on non-shunted lampholders

Linear LED ballast bypass T8 U-bend series

- No ballast or external driver required
- Direct wire 120-277V line voltage**
- All glass tube
- Damp location
- c-UL-us Classified
- DLC listed*
- Long life—50,000 hours
- 5 Year warranty

Wiring Diagram

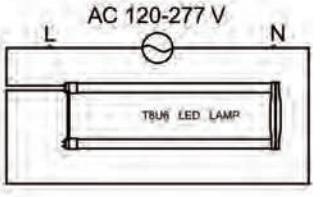

BALLAST BYPASS · DAMP LOCATION · CLASSIFIED c UL us · DLC *

Linear LED Ballast Bypass T8 U-Bend Series

Item Number	Lamp Description	W	V	CRI	CCT	Lm	Bm	M.O.L. (inches)	Life/ Hrs.	UPC	Pack
S9930*	15T8U6/LED/22.5-830/BP	15	120-277	82	3000K	1700	220°	22 ½	50K	045923099304	12
S9931*	15T8U6/LED/22.5-835/BP	15	120-277	82	3500K	1700	220°	22 ½	50K	045923099311	12
S9932*	15T8U6/LED/22.5-840/BP	15	120-277	82	4000K	1800	220°	22 ½	50K	045923099328	12
S9933*	15T8U6/LED/22.5-850/BP	15	120-277	82	5000K	1800	220°	22 ½	50K	045923099335	12

** Install on non-shunted lampholders

43W Linear LED ballast bypass 8' T8 series

- Double ended wiring
- Shatterproof coated
- Over 40% energy savings vs standard 8' T8 systems
- Slimline single pin base - replaces T8 & T12
- No ballast or external driver required
- Direct wire 120-277V line voltage
- All glass tube
- Damp location
- NSF certified
- c-UL-us Classified
- Long life—50,000 hours
- 5 Year warranty

Wiring Diagram

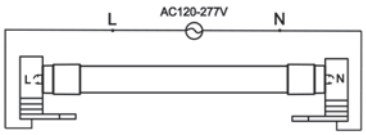

LED T8 Ballast Bypass

Item Number	Lamp Description	W	CRI	Base Type	Bm	CCT	Lm	M.O.L. (Inches)	Life/ Hrs.	UPC	Pack
S9917*	43T8/LED/96-835/BP	43	82	Single Pin	210°	3500K	5500	96	50K	045923099175	10
S9918*	43T8/LED/96-840/BP	43	82	Single Pin	210°	4000K	5500	96	50K	045923099182	10
S9919*	43T8/LED/96-850/BP	43	82	Single Pin	210°	5000K	5500	96	50K	045923099199	10

43W Linear LED ballast bypass 8' T8 series

- Double ended wiring
- Shatterproof coated
- Over 40% energy savings vs standard 8' T8 systems
- R17d base designed to replace 8' T8 HO and T12 HO Fluorescent lamps
- No ballast or external driver required
- Direct wire 120-277V line voltage
- All glass tube
- Damp location
- NSF certified
- c-UL-us Classified
- Long life—50,000 hours
- 5 Year warranty

Wiring Diagram

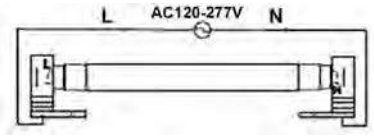

LED T8 Ballast Bypass

Item Number	Lamp Description	W	CRI	Base Type	Bm	CCT	Lm	M.O.L. (Inches)	Life/ Hrs.	UPC	Pack
S9924	43T8/LED/96-840/BP/R17d	43	82	R17d	210°	4000K	5500	96	50K	045923099243	10
S9925	43T8/LED/96-850/BP/R17d	43	82	R17d	210°	5000K	5500	96	50K	045923099250	10
S9942	43T8/LED/96-865/BP/R17d	43	82	R17d	210°	6500K	5500	96	50K	045923099427	10

25W, 4' Linear LED T5 lamps

Direct replacement for linear fluorescent F54T5HO lamps in existing fixtures with electronic ballasts. No rewiring required♦

- Over 50% energy savings vs. standard 4' T5 systems
- All glass tube
- Compatible with rapid start ballasts♦
- Integrated thermal fuse at pins
- Damp location • NSF certified
- c-UL-us listed • DLC listed*
- Long life—50,000 hours
- 5 Year warranty

LED T5 Ballast Compatible

Item Number	Lamp Description	W	CRI	Base Type	Bm	CCT	Lm	Nominal (M.O.L.)	Life/ Hrs.	UPC	Pack
S29912*	25T5/LED/46-835/DR	25	82	G5	185°	3500K	3300	48 (46)	50K	045923097126	10
S29910*	25T5/LED/46-840/DR	25	82	G5	185°	4000K	3500	48 (46)	50K	045923097102	10
S29911*	25T5/LED/46-850/DR	25	82	G5	185°	5000K	3500	48 (46)	50K	045923097119	10

♦ May not be compatible with all rapid start ballasts. Visit www.satco.com for an approved list.

Satco LED T5 ballast bypass series

Ballast bypass replacement for linear fluorescent T5 HO & HE lamps in existing fixtures.

- No ballast or external driver required
- Available in 2', 3' & 4'
- Direct wire 120-277V line voltage
- All glass tube • PET–shatterproof coated
- Damp location • c-UL-us Classified
- NSF certified • DLC listed*
- Long life—50,000 hours
- 5 Year warranty

Single Ended Wiring

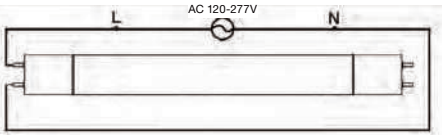

LED T5 Ballast Bypass Lamps

Item Number	Lamp Description	W	V	CRI	Base Type	Bm	CCT	Lm	Nominal (M.O.L.)	Life/ Hrs.	UPC	Pack
S8693	12T5/LED/24-835/BP/HO	12	120-277	83	G5	240°	3500K	1400	24 (22.5)	50K	045923086939	25
S8694	12T5/LED/24-840/BP/HO	12	120-277	83	G5	240°	4000K	1450	24 (22.5)	50K	045923086946	25
S8695	12T5/LED/24-850/BP/HO	12	120-277	83	G5	240°	5000K	1500	24 (22.5)	50K	045923086953	25
S8696	16T5/LED/36-835/BP/HO	16	120-277	83	G5	240°	3500K	1800	36 (34)	50K	045923086960	25
S8697	16T5/LED/36-840/BP/HO	16	120-277	83	G5	240°	4000K	1850	36 (34)	50K	045923086977	25
S8698	16T5/LED/36-850/BP/HO	16	120-277	83	G5	240°	5000K	1900	36 (34)	50K	045923086984	25
S8690*	13T5/LED/46-835/BP/HE	13	120-277	83	G5	240°	3500K	1600	48 (46)	50K	045923086908	25
S8691*	13T5/LED/46-840/BP/HE	13	120-277	83	G5	240°	4000K	1650	48 (46)	50K	045923086915	25
S8692*	13T5/LED/46-850/BP/HE	13	120-277	83	G5	240°	5000K	1700	48 (46)	50K	045923086922	25
S29717*	25T5/LED/46-835/BP/HO	25	120-277	83	G5	240°	3500K	3200	48 (46)	50K	045923297175	25
S29718*	25T5/LED/46-840/BP/HO	25	120-277	83	G5	240°	4000K	3300	48 (46)	50K	045923297182	25
S29719*	25T5/LED/46-850/BP/HO	25	120-277	83	G5	240°	5000K	3400	48 (46)	50K	045923297199	25

Satco LED T5 mini bi-pin (G5) ballast bypass series

Ballast bypass replacement for mini bi-pin linear fluorescent T5 preheat lamps in existing fixtures.

- No ballast or external driver required
- Available in 6", 9", 12", & 21"
- Direct wire 120-277V line voltage
- PET Shatterproof coated
- Damp location
- c-UL-us classified
- Long life—50,000 hours
- 5 Year warranty

Double Ended Wiring

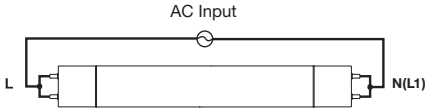

BALLAST BYPASS

DAMP LOCATION

CLASSIFIED c UL us

LED T5 Mini Bi-Pin Ballast Bypass Lamps

Item Number	Lamp Description	Replaces	W	V	CRI	Base Type	Bm	CCT	Lm	M.O.L. (Nominal)	Length (Inches)	Life/ Hrs.	UPC	Pack
S11900	2W/LED/T5/840	F4T5/CW	2	120-277	80	G5	240°	4000K	150	5 29/32	6	50K	045923119002	10
S11901	2W/LED/T5/865	F4T5/D	2	120-277	80	G5	240°	6500K	150	5 29/32	6	50K	045923119019	10
S11902	3W/LED/T5/840	F6T5/CW	3	120-277	80	G5	240°	4000K	270	8 29/32	9	50K	045923119026	10
S11903	3W/LED/T5/865	F6T5/D	3	120-277	80	G5	240°	6500K	270	8 29/32	9	50K	045923119033	10
S11904	4W/LED/T5/830	F8T5/WW	4	120-277	80	G5	240°	3000K	400	11 29/32	12	50K	045923119040	10
S11905	4W/LED/T5/840	F8T5/CW	4	120-277	80	G5	240°	4000K	400	11 29/32	12	50K	045923119057	10
S11906	4W/LED/T5/865	F8T5/D	4	120-277	80	G5	240°	6500K	400	11 29/32	12	50K	045923119064	10
S11907	7W/LED/T5/830	F13T5/WW	7	120-277	80	G5	240°	3000K	700	20 29/32	21	50K	045923119071	10
S11908	7W/LED/T5/840	F13T5/CW	7	120-277	80	G5	240°	4000K	700	20 29/32	21	50K	045923119088	10
S11909	7W/LED/T5/865	F13T5/D	7	120-277	80	G5	240°	6500K	700	20 29/32	21	50K	045923119095	10

LED T8 dual mode (ballast bypass/ ballast compatible) 1-5/8" u-bend lamps

Direct replacements for fluorescent T8 u-bend lamps in existing fixtures with or without ballasts.

- Over 50% energy savings vs. standard T8 systems
- Ballast compatible and ballast bypass in one lamp
- Bypass mode works in single or double ended wiring†
- Protection from arcing
- 120-277V in bypass mode
- Damp location
- NSF certified
- DLC 4.2 listed
- C-UL-us listed—ballast compatible
- c-UL-us Classified—ballast bypass
- Long life—50,000 hours
- 5 Year warranty**

LED T8 Dual Mode U-bend Lamps—**Ballast Compatible**

Item Number	Lamp Description	W	CRI	CCT	Lm	M.O.L. (Inches)	Life/ Hrs.	UPC	Pk./ Mstr.
S18450	13T8/U1-G13/LED/830/DUAL	13	80	3000K	1800	22 ½	50K	045923184505	24
S18451	13T8/U1-G13/LED/835/DUAL	13	80	3500K	1800	22 ½	50K	045923184512	24
S18452	13T8/U1-G13/LED/840/DUAL	13	80	4000K	1900	22 ½	50K	045923184529	24
S18453	13T8/U1-G13/LED/850/DUAL	13	80	5000K	2000	22 ½	50K	045923184536	24

May not be compatible with all instant start, rapid start, dimmable, and emergency ballasts. Visit www.satco.com for an approved list.
** See separate warranty for complete terms and conditions.

LED T8 Dual Mode U-bend Lamps—**Ballast Bypass**

Item Number	Lamp Description	W	V	CRI	CCT	Lm	M.O.L. (Inches)	Life/ Hrs.	UPC	Pk./ Mstr.
S18450	13T8/U1-G13/LED/830/DUAL	13	120-277	80	3000K	1800	22 ½	50K	045923184505	24
S18451	13T8/U1-G13/LED/835/DUAL	13	120-277	80	3500K	1800	22 ½	50K	045923184512	24
S18452	13T8/U1-G13/LED/840/DUAL	13	120-277	80	4000K	1900	22 ½	50K	045923184529	24
S18453	13T8/U1-G13/LED/850/DUAL	13	120-277	80	5000K	2000	22 ½	50K	045923184536	24

LED T8 dual mode (ballast bypass/ ballast compatible) linear lamps

Direct replacements for fluorescent T8 lamps in existing fixtures with or without ballasts.

- Over 40% energy savings vs. standard T8 systems
- Ballast compatible (12W) and ballast bypass (13W) in one lamp
- Bypass mode works in single or double ended wiring♦♦
- Protection from arcing***
- All glass tube
- Compatible with emergency and dimming ballasts♦
- 120-277V in bypass mode
- Damp location
- PET coated
- NSF certified
- DLC 4.2 listed
- C-UL-us listed—ballast compatible
- c-UL-us Classified—ballast bypass
- Long life—50,000 hours
- 5 Year warranty**

LED T8 Dual Mode Linear Lamps

♦ BALLAST | DAMP LOCATION | c UL us LISTED | NSF | DLC

Item Number	Lamp Description	W	CRI	CCT	Lm	Bm	M.O.L. (Inches)	Life/ Hrs.	UPC	Pack/ Master
Ballast Compatible♦										
S8890	12T8/LED/48-830/DUAL/BP-DR	12	83	3000K	1800	240˚	48	50K	045923088902	25
S8891	12T8/LED/48-835/DUAL/BP-DR	12	83	3500K	1800	240˚	48	50K	045923088919	25
S8892	12T8/LED/48-840/DUAL/BP-DR	12	83	4000K	1900	240˚	48	50K	045923088926	25
S8893	12T8/LED/48-850/DUAL/BP-DR	12	83	5000K	1900	240˚	48	50K	045923088933	25

♦ May not be compatible with all instant start, rapid start, dimmable, and emergency ballasts. Visit www.satco.com for an approved list.
** See separate warranty for complete terms and conditions.

LED T8 Dual Mode Linear Lamps

♦♦ BALLAST BYPASS | DAMP LOCATION | c UL us CLASSIFIED | NSF | DLC

Item Number	Lamp Description	W	V	CRI	CCT	Lm	Bm	M.O.L. (Inches)	Life/ Hrs.	UPC	Pack/ Master
Ballast Bypass♦♦											
S8890	13T8/LED/48-830/DUAL/BP-DR	13	120-277	83	3000K	1800	240˚	48	50K	045923088902	25
S8891	13T8/LED/48-835/DUAL/BP-DR	13	120-277	83	3500K	1800	240˚	48	50K	045923088919	25
S8892	13T8/LED/48-840/DUAL/BP-DR	13	120-277	83	4000K	1900	240˚	48	50K	045923088926	25
S8893	13T8/LED/48-850/DUAL/BP-DR	13	120-277	83	5000K	1900	240˚	48	50K	045923088933	25

♦ May not be compatible with all instant start, rapid start, dimmable, and emergency ballasts. Visit www.satco.com for an approved list.
♦♦ Bypass mode works wired as a single ended lamp on non-shunted sockets or as a double ended lamp on either shunted or non-shunted sockets.
** See separate warranty for complete terms and conditions.

LED T8 dual mode linear lamps

(Cont'd. from page 84)

Wiring–Ballast Compatible

- For instant start ballasts on the approved list, ensure that LED/fluorescent sockets are wired in a shunt configuration according to manufacturer's wiring diagram.
- For rapid start ballasts on the approved list, non-shunted LED/fluorescent sockets are needed and wired according to manufacturer's wiring diagram.

Wiring Options–Ballast Bypass - 120-277V

Single Ended—Non-Shunted Sockets

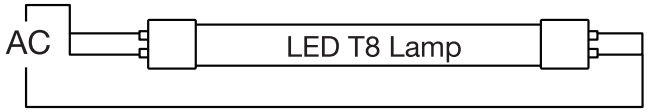

Double Ended—Shunted Sockets

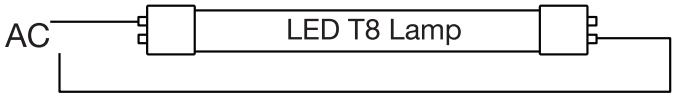

Double Ended—Non-Shunted Sockets

System Performance - LED T8 Dual Mode Linear Lamps—**Ballast Compatible**

System Performance Chart				Bare Lamp (Rated)		Bare Lamp Wattage			System Wattage			Initial Lumens			Lifetime		
Item Nmbr	Description	CCT	Length (ft)	Nominal Wattage	Nominal Lumens	LBF (0.78)	NBF (0.88)	HBF (1.18)	LBF (0.78)	NBF (0.88)	HBF (1.18)	LBF (0.78)	NBF (0.88)	HBF (1.18)	LBF (0.78)	NBF (0.88)	HBF (1.18)▼
S8890	12T8/LED/48-830/DUAL/BP-DR	3000K	4	12	1800	11.0	12.0	17	13.5	15.5	20.0	1600	1800	2500	>50Khrs	>50Khrs	50Khrs
S8891	12T8/LED/48-835/DUAL/BP-DR	3500K	4	12	1800	11.0	12.0	17	13.5	15.5	20.0	1600	1800	2500	>50Khrs	>50Khrs	50Khrs
S8892	12T8/LED/48-840/DUAL/BP-DR	4000K	4	12	1900	11.0	12.0	17	13.5	15.5	20.0	1700	1900	2600	>50Khrs	>50Khrs	50Khrs
S8893	12T8/LED/48-850/DUAL/BP-DR	5000K	4	12	1900	11.0	12.0	17	13.5	15.5	20.0	1700	1900	2600	>50Khrs	>50Khrs	50Khrs

*** Power must be turned off prior to installing lamps. Sockets must be in good working order, not broken, cracked or electrically compromised. If arcing occurs at the lamp pin, thermal fuse may activate to avoid overheating of lamp.
▼ LED tube life will change with ballast factor, configurations producing ballast factors above 1.18 are not allowed.

12"–16 Watt

8" and 12" T9 LED ballast bypass Circline lamps

- No ballast or external driver required
- Over 40% energy savings vs. standard T9 systems
- Replaces 22W and 32W fluorescent Circlines
- 120–277V (direct wire)
- Damp location
- NSF certified
- c-ETL-us listed
- Long life—50,000 hours
- 5 Year warranty

8"–11 Watt

Beam Profile

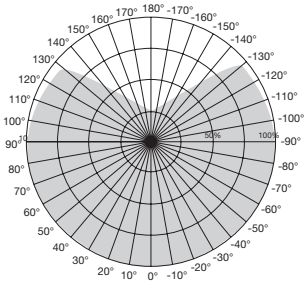

Beam Angle: 135º

LED T9 8" and 12" Circline Lamps

Item Number	Lamp Description	W	CRI	Base Type	V	Bm	CCT	Lm	M.O.L. (Inches)	Life/ Hrs.	UPC	Pack
S16500	FC8T9/11W/LED/CIR/830/BP	11	80	G10Q	120-277	135º	3000K	1100	8	50K	045923165009	20
S16501	FC8T9/11W/LED/CIR/840/BP	11	80	G10Q	120-277	135º	4000K	1210	8	50K	045923165016	20
S16502	FC8T9/11W/LED/CIR/865/BP	11	80	G10Q	120-277	135º	6500K	1210	8	50K	045923165023	20
S16503	FC12T9/16W/LED/CIR/830/BP	16	80	G10Q	120-277	135º	3000K	1600	12	50K	045923165030	20
S16504	FC12T9/16W/LED/CIR/840/BP	16	80	G10Q	120-277	135º	4000K	1760	12	50K	045923165047	20
S16505	FC12T9/16W/LED/CIR/865/BP	16	80	G10Q	120-277	135º	6500K	1760	12	50K	045923165054	20

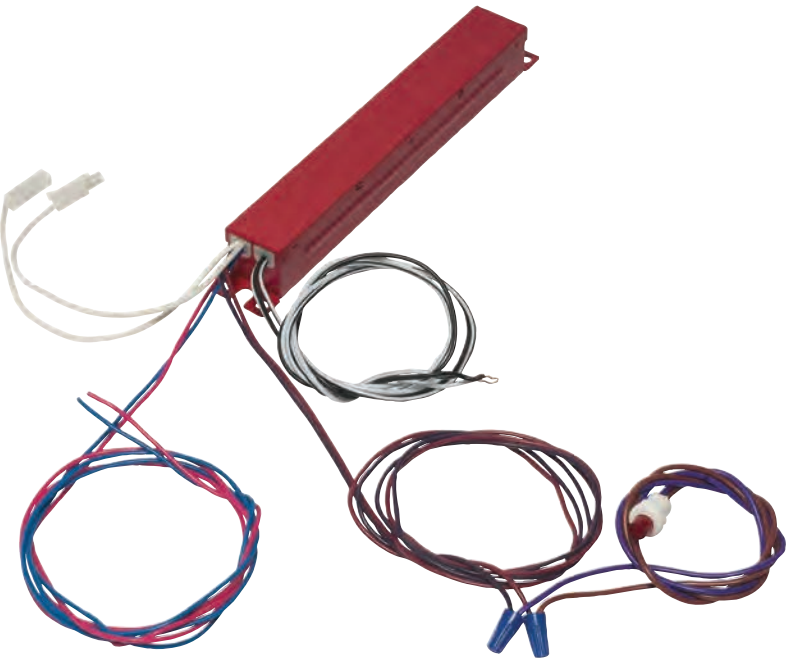

Emergency battery backup and LED driver.

For LED T8 and T5 ballast bypass lamps.

- 5 Watt output power
- 1.8 Watt standby power
- 90 minute battery run time at 5W
- Output and over-power protection
- Lithium Ion battery
- 0°C-50°C Operating temperature
- Recharge 24 hours max
- 5 Year warranty

For use with the following lamps:

1. Satco 4' T8 (S9720–S9723)
2. Satco U-Bend (S9930–S9933)
3. Satco 4' T5 LED bypass lamps (S29717–S29719)
4. Satco new generation double ended bypass lamps (S29900-S29907, S29926-S29929, S29913-S29916)

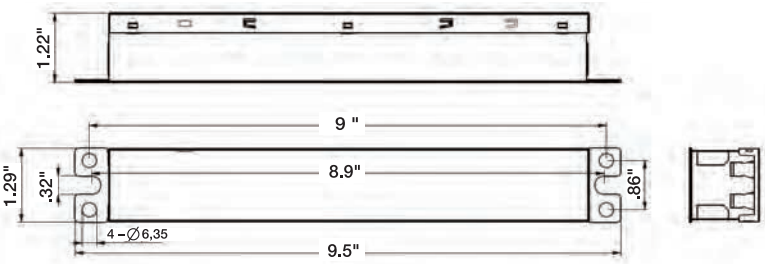

Double Ended Wiring

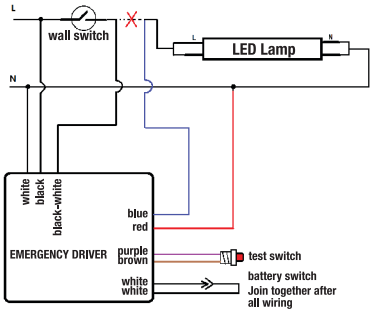

Single Ended Wiring

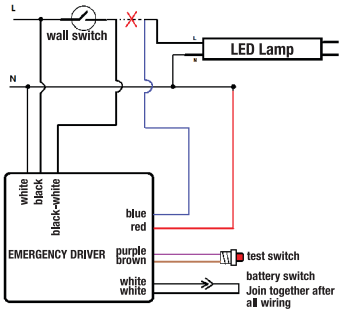

Emergency Battery Backup & LED Driver—For LED T8 and T5 Ballast Bypass Lamps

Item Number	Description	W	V	M.O.L. (inches)	Dimensions	UPC	Case
S8000	5W Emergency LED driver	5	120-277	9.5	1.3"W x 1.22"H x 9.5"L	045923080005	25

LED T8 sign lamps

- Over 40% savings vs. standard T8 systems
- 2', 3', 4', 5', 6' & 8' Lengths
- Base rotates 90° for easy installation
- Wide, 330° beam angle
- CRI >83
- No ballast and no external driver required
- Direct wire 120-277V line voltage
- Damp location
- NSF Certified
- C-UL-us Classified
- Long life—50,000 hours
- 5 Year warranty**

Wiring Diagram - AC 120-277V
Single Ended Wiring Required

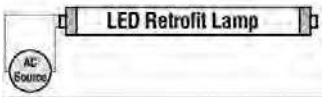

BALLAST BYPASS DAMP LOCATION CLASSIFIED C UL US NSF

LED T8 Sign Lamps

Item Number	Lamp Description	W	CRI	Base	CCT	Lm	Nominal (MOL)	Life/ Hrs.	UPC	Pk./ Mstr.
S16400	9T8/LED/HO-SIGN/24-840/BP	9	83	R17D	4000K	1200	24 (21.9)	50K	045923164002	10
S16401	9T8/LED/HO-SIGN/24-865/BP	9	83	R17D	6500K	1200	24 (21.9)	50K	045923164019	10
S16402	12T8/LED/HO-SIGN/36-840/BP	12	83	R17D	4000K	1500	36 (33.9)	50K	045923164026	10
S16403	12T8/LED/HO-SIGN/36-865/BP	12	83	R17D	6500K	1500	36 (33.9)	50K	045923164033	10
S16404	18T8/LED/HO-SIGN/48-840/BP	18	83	R17D	4000K	2300	48 (46.0)	50K	045923164040	10
S16405	18T8/LED/HO-SIGN/48-865/BP	18	83	R17D	6500K	2300	48 (46.0)	50K	045923164057	10
S16406	24T8/LED/HO-SIGN/60-840/BP	24	83	R17D	4000K	3100	60 (57.9)	50K	045923164064	10
S16407	24T8/LED/HO-SIGN/60-865/BP	24	83	R17D	6500K	3100	60 (57.9)	50K	045923164071	10
S16408	30T8/LED/HO-SIGN/72-840/BP	30	83	R17D	4000K	4100	72 (69.9)	50K	045923164088	10
S16409	30T8/LED/HO-SIGN/72-865/BP	30	83	R17D	6500K	4100	72 (69.9)	50K	045923164095	10
S16410	36T8/LED/HO-SIGN/96-840/BP	36	83	R17D	4000K	5000	96 (93.9)	50K	045923164101	10
S16411	36T8/LED/HO-SIGN/96-865/BP	36	83	R17D	6500K	5000	96 (93.9)	50K	045923164118	10

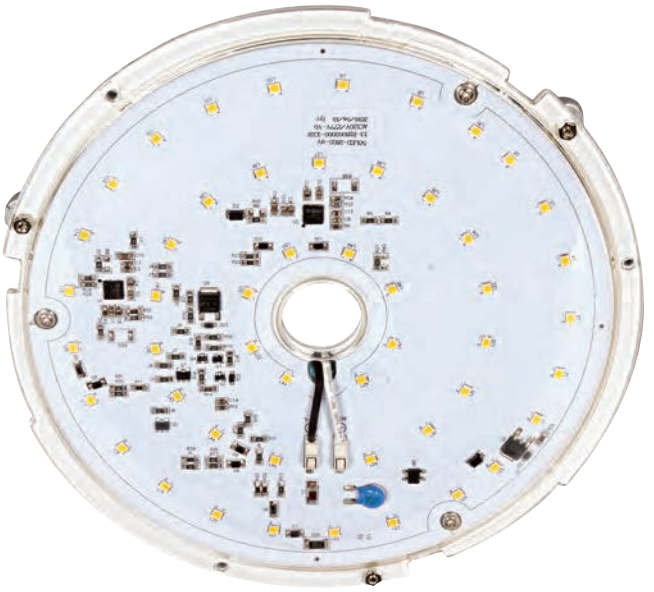

Circular LED module retrofit kits

Upgades most flushmount fixtures to efficient LED light

- Replaces 3 60W incandescent lamps, uses only 20 Watts
- Dimmable
- Dimensions: 8" W x 0.65" H
- Life—30,000 hours
- 3 Year warranty
- LED Circular light engine
- All necessary hardware for installation into a variety of flushmount fixtures
- Instructions and wiring diagrams

A) (1) circular light engine
B) (6) small wire nuts
C) (6) medium wire nuts
D) (1) lock-down retaining ring & washer
E) (3) 1" #4 screws
F) (4 x 2 each) assorted snap-in grommets (install grommets where supply wires enter fixture for power).
G) Wiring Diagram

Easily converts most standard flushmount fixtures to LED

DIMMABLE DAMP LOCATION Intertek

Circular LED Module Retrofit Kits

Item Number	Lamp Description	W	V	CCT	CRI	Lm	Life/ Hrs.	UPC	Pack
S9782	20W/LED/LIGHT ENGINE/27K/RK	20	120-277	2700K	90	1450	30K	045923097829	20/1
S9783	20W/LED/LIGHT ENGINE/30K/RK	20	120-277	3000K	90	1550	30K	045923097836	20/1
S9784	20W/LED/LIGHT ENGINE/40K/RK	20	120-277	4000K	90	1650	30K	045923097843	20/1

INDEX

Item No.	Page
80-929	57, 59, 62, 63, 64, 65, 66, 66
80-935	60
80-936	55
80-937	55
80-938	55
80-/939	55
90-483	67
92-410	57, 59, 60, 63, 64, 65
S8000	87
S8189	32
S8190	32
S8191	32
S8480	21
S8481	21
S8482	21
S8483	24
S8484	24
S8485	24
S8486	26
S8487	26
S8488	26
S8489	25
S8490	27
S8491	33
S8492	33
S8493	35
S8494	36
S8495	37
S8496	38
S8497	39
S8498	39
S8499	25
S8530	70
S8531	70
S8532	70
S8533	70
S8534	70
S8535	70
S8536	70
S8537	70
S8538	70
S8539	70
S8542	29
S8543	29
S8544	29
S8545	29
S8550	10
S8551	12
S8552	12
S8553	11
S8554	13
S8555	13
S8556	13
S8557	20
S8558	20
S8559	13
S8560	22
S8561	22
S8562	22
S8563	22
S8564	25
S8565	25
S8566	27
S8567	27
S8568	27
S8570	29
S8571	29
S8572	31
S8573	31
S8574	32
S8575	32
S8576	32
S8577	33
S8578	33
S8579	33
S8580	35
S8581	36
S8582	37
S8583	38
S8584	39
S8585	40
S8588	42
S8589	42
S8593	20
S8594	20
S8595	32
S8596	33
S8597	35
S8598	36
S8600	43
S8601	43
S8609	17
S8610	17
S8611	17
S8612	17
S8615	17
S8616	17
S8635	41
S8636	41
S8637	41
S8638	41
S8639	41
S8640	41
S8641	41
S8642	41
S8643	41
S8644	41
S8646	27
S8647	27
S8648	27
S8649	27
S8650	24
S8651	24
S8652	26
S8653	26
S8688	43
S8689	43
S8690	81
S8691	81
S8692	81
S8693	81
S8694	81
S8695	81
S8696	81
S8697	81
S8698	81
S8705	55
S8706	55
S8707	55
S8708	55
S8725	72
S8726	72
S8727	72
S8728	72
S8729	72
S8735	57
S8736	57
S8737	57
S8738	57
S8745	72
S8746	72
S8747	72
S8748	72
S8749	72
S8755	72
S8756	72
S8757	72
S8758	72
S8759	72
S8776	65
S8777	65
S8778	57
S8779	57
S9782	89
S9783	89
S9784	89
S8839	12
S8840	12
S8841	13
S8849	11
S8850	10
S8851	13
S8890	84
S8891	84
S8892	84
S8893	84
S8914	21
S8915	21
S8916	21
S8920	21
S8928	63
S8929	63
S8930	63
S8931	62
S8932	62
S8937	62
S8938	62
S8950	32
S8951	32
S8952	32
S8953	32
S8976	69
S8987	63
S8988	61
S8989	61
S9004	56
S9005	56
S9022	34
S9030	31
S9031	31
S9032	31
S9033	31
S9064	31
S9065	31
S9067	31
S9068	31
S9150	18
S9151	18
S9152	18
S9153	18
S9154	18
S9155	18
S9156	18
S9157	18
S9158	18
S9159	18
S9160	18
S9161	18
S9162	18
S9163	18
S9164	18
S9165	18
S9166	18
S9167	18
S9168	18
S9169	18
S9170	18
S9171	18
S9172	18
S9173	18
S9174	18
S9175	18
S9176	18
S9177	18
S9200	32
S9201	32
S9202	32
S9203	32
S9280	40
S9281	40
S9282	40
S9283	40
S9316	29
S9317	29
S9318	29
S9319	29
S9380	42
S9381	42
S9382	42
S9383	42
S9384	42
S9385	42
S9386	40
S9387	40
S9388	40
S9389	40
S9400	36
S9401	36
S9402	36
S9403	36
S9404	36
S9405	36
S9406	36
S9407	36
S9408	36
S9409	36
S9410	37
S9411	37
S9412	37
S9413	37
S9414	37
S9415	37
S9416	37
S9417	37
S9418	37
S9419	37
S9420	37
S9421	37
S9422	37
S9423	37
S9424	37
S9425	38
S9426	38
S9427	38
S9428	38
S9429	38
S9430	38
S9431	38
S9432	38
S9433	38
S9434	38
S9435	38
S9436	38
S9437	38
S9438	38
S9439	38
S9440	39
S9441	39
S9442	39
S9443	39
S9444	39
S9445	39
S9446	39
S9447	39
S9448	39
S9449	39
S9450	39
S9451	39
S9452	39
S9453	39
S9454	39
S9455	39
S9456	39
S9457	39
S9480	39
S9481	39
S9482	39
S9483	39
S9484	39
S9485	36
S9486	37
S9487	38
S9488	39
S9489	59
S9490	41
S9491	41
S9492	41
S9493	41
S9494	41
S9495	41
S9496	41
S9497	41
S9498	41
S9499	41
S9542	43
S9543	43
S9544	43
S9545	43
S9546	43
S9547	43
S9550	40
S9551	40
S9552	41
S9553	41
S9564	11
S9565	11
S9566	11
S9567	12
S9569	12
S9570	12
S9571	12
S9573	12
S9574	12
S9575	13
S9576	13
S9577	14
S9578	14
S9579	14
S9580	13
S9581	13
S9582	13
S9583	14
S9584	14
S9585	14
S9588	14
S9590	20
S9591	20
S9592	20
S9593	21
S9594	21
S9595	21
S9598	47
S9599	47
S9614	33
S9615	35
S9616	41
S9618	32
S9619	32
S9621	33
S9622	33
S9623	33
S9624	33
S9625	33
S9626	33
S9627	33
S9630	33
S9631	33
S9632	33
S9633	33
S9634	35
S9635	35
S9636	35
S9637	35
S9638	35
S9639	35
S9640	35
S9641	35
S9678	59
S9698	34
S9703	21
S9704	21
S9707	21
S9708	21
S9720	79
S9721	79
S9722	79
S9723	79
S9729	56
S9753	61
S9754	61

Item No.	Page
S9755	61
S9760	66
S9761	66
S9762	66
S9763	66
S9764	66
S9765	66
S9794	54
S9795	54
S9796	54
S9797	54
S9806	28
S9824	10
S9826	10
S9827	11
S9828	11
S9845	10
S9846	10
S9854	71
S9855	71
S9856	71
S9857	71
S9862	71
S9863	71
S9864	71
S9865	71
S9868	12
S9869	12
S9870	11
S9872	13
S9873	14
S9874	10
S9875	10
S9876	10
S9892	13
S9893	11
S9894	10
S9895	13
S9917	80
S9918	80
S9919	80
S9924	80
S9925	80
S9930	79
S9931	79
S9932	79
S9933	79
S9942	80
S9946	75
S9947	75
S9948	75
S9949	75
S9950	74
S9951	74
S9960	12
S9961	12
S9962	12
S9963	12
S9964	12
S9965	12
S9966	15
S9967	15
S9968	15
S9969	15
S9970	15
S9971	15
S9986	14
S9987	14
S9988	11
S9990	75
S9991	75
S9992	75
S9993	75
S9994	75
S9995	75
S9996	75
S9997	75
S11900	82
S11901	82
S11902	82

Item No.	Page
S11903	82
S11904	82
S11905	82
S11906	82
S11907	82
S11908	82
S11909	82
S13100	58
S13101	58
S13102	58
S13103	58
S13104	58
S13105	58
S13106	58
S13107	58
S13108	58
S13109	58
S13110	58
S13111	58
S14984	30
S14985	30
S14986	30
S14987	30
S14988	30
S14989	30
S15011	31
S15012	31
S16400	88
S16401	88
S16402	88
S16403	88
S16404	88
S16405	88
S16406	88
S16407	88
S16408	88
S16409	88
S16410	88
S16411	88
S16500	86
S16501	86
S16502	86
S16503	86
S16504	86
S16505	86
S18450	83
S18451	83
S18452	83
S18453	83
S21400	73
S21401	73
S21402	73
S21403	73
S21404	73
S21405	73
S21406	73
S21407	73
S21700	17
S21701	17
S21702	17
S21703	17
S21704	17
S21705	17
S21706	17
S21707	17
S21708	12
S21709	12
S21710	17
S21711	17
S21712	10
S21713	10
S21714	10
S21800	30
S21801	30
S21802	30
S21803	30
S21804	30
S21805	30
S21806	30
S21807	30

Item No.	Page
S22430	16
S22431	16
S22432	16
S22433	16
S22703	19
S22707	19
S22712	19
S22713	19
S23403	19
S23407	19
S23412	19
S23413	19
S28602	43
S28613	17
S28614	17
S28680	43
S28681	43
S28682	43
S28683	43
S28684	43
S28685	43
S28686	43
S28687	43
S28710	60
S28711	60
S28712	60
S28713	60
S28714	60
S28715	60
S28716	60
S28717	60
S28765	24
S28766	24
S28767	24
S28768	24
S28769	25
S28770	25
S28785	26
S28786	26
S28787	26
S28788	26
S28789	27
S28790	27
S28939	68
S28946	68
S28975	68
S29011	52
S29012	52
S29013	52
S29021	52
S29026	53
S29027	53
S29028	53
S29029	53
S29055	50
S29056	50
S29057	50
S29058	50
S29059	51
S29061	51
S29062	51
S29063	51
S29188	35
S29312	46
S29313	46
S29314	46
S29315	46
S29390	59
S29391	59
S29392	59
S29393	59
S29394	59
S29395	59
S29396	59
S29397	59
S29463	44
S29464	44
S29465	44
S29466	44
S29467	44

Item No.	Page
S29468	44
S29472	45
S29473	45
S29474	45
S29548	43
S29549	43
S29558	22
S29563	11
S29589	22
S29596	22
S29597	22
S29628	34
S29629	23
S29670	59
S29671	59
S29672	59
S29673	59
S29674	59
S29675	59
S29676	59
S29677	59
S29679	64
S29697	43
S29699	23
S29713	44
S29714	44
S29715	44
S29716	44
S29717	81
S29718	81
S29719	81
S29724	45
S29725	45
S29726	45
S29727	45
S29740	45
S29741	45
S29742	45
S29743	45
S29750	64
S29751	64
S29752	64
S29756	48
S29757	48
S29758	48
S29759	48
S29768	64
S29769	64
S29770	49
S29771	49
S29772	49
S29773	49
S29798	64
S29799	64
S29804	24
S29805	26
S29810	24
S29811	24
S29812	24
S29813	24
S29814	24
S29816	26
S29817	26
S29818	26
S29819	26
S29825	10
S29830	20
S29831	20
S29832	20
S29833	20
S29834	20
S29835	21
S29836	21
S29837	21
S29838	21
S29839	21
S29840	21
S29841	21
S29842	21
S29850	71

Item No.	Page
S29851	71
S29852	71
S29853	71
S29858	71
S29859	71
S29860	71
S29861	71
S29866	12
S29867	12
S29871	11
S29877	12
S29878	11
S29879	10
S29890	12
S29891	12
S29900	78
S29901	78
S29902	78
S29903	78
S29904	78
S29905	78
S29906	78
S29907	78
S29910	81
S29911	81
S29912	81
S29913	78
S29914	78
S29915	78
S29916	78
S29920	12
S29921	12
S29922	12
S29923	12
S29926	78
S29927	78
S29928	78
S29929	78
S29934	76
S29935	76
S29936	76
S29937	76
S29938	76
S29939	76
S29940	76
S29941	76
S29975	77
S29976	77
S29977	77
S29978	77

SATCO | NUVO

National Toll-Free:
800-43-SATCO
(800-437-2826)
www.satco.com

Copyright © 2019
Satco Products, Inc
All Rights Reserved.
2/19 SA2000
$10.00

Distribution Centers:

FLORIDA
900 N.W. 159th Dr.
Miami, FL 33169
PH 305-624-2044
FX 305-623-0286

CALIFORNIA
31288 San Benito St.
Hayward, CA 94544
PH 510-487-4822
FX 510-487-8955

WASHINGTON
4710 116th St. S.W.
Mukilteo, WA 98275
PH 425-789-3300
FX 425-789-3310

TEXAS
2000 Valwood Pkwy.
Farmers Branch, TX
75234
PH 972-247-2437
FX 972-247-5408

PUERTO RICO
Campeche St. 23
Julio N. Matos
Industrial Park,
Carolina, PR 00984
PH 787-757-3510
FX 787-757-3540

Corporate Offices and Distribution Center:

NEW YORK
110 Heartland Blvd.
Brentwood, NY 11717
PH 631-243-2022
FX 631-243-2027

SATCO® | NUVO®

National Toll-Free:
800-43-SATCO
(800-437-2826)
www.satco.com

Copyright © 2018
Satco Products, Inc
All Rights Reserved.
6/18 SA1297-10
$10.00

Distribution Centers:

FLORIDA
900 N.W. 159th Dr.
Miami, FL 33169
PH 305-624-2044
FX 305-623-0286

CALIFORNIA
31288 San Benito St.
Hayward, CA 94544
PH 510-487-4822
FX 510-487-8955

WASHINGTON
4710 116th St. S.W.
Mukilteo, WA 98275
PH 425-789-3300
FX 425-789-3310

TEXAS
2000 Valwood Pkwy.
Farmers Branch, TX
75234
PH 972-247-2437
FX 972-247-5408

PUERTO RICO
Campeche St. 23
Julio N. Matos
Industrial Park,
Carolina, PR 00984
PH 787-757-3510
FX 787-757-3540

Corporate Offices and Distribution Center:

NEW YORK
110 Heartland Blvd.
Brentwood, NY 11717
PH 631-243-2022
FX 631-243-2027

SATCO® | NUVO®

LED FIXTURE REFERENCE GUIDE

- INDOOR/OUTDOOR
- COMMERCIAL
- UTILITY
- RESIDENTIAL

JULY 2018

We are pleased to present the latest edition of our Commercial LED Product Guide. Many new luminaires and accessories have been added, and color-coded and arranged to make finding the right product is easy.

Brilliance

Satco is committed to providing unsurpassed quality, service and product assortment. Many of our product categories are supported by merchandising systems, displays and a selection of attention-getting point of purchase materials. These efforts, along with our strategic locations, make Satco the preferred choice in light sources and electrical related products.

Six convenient locations

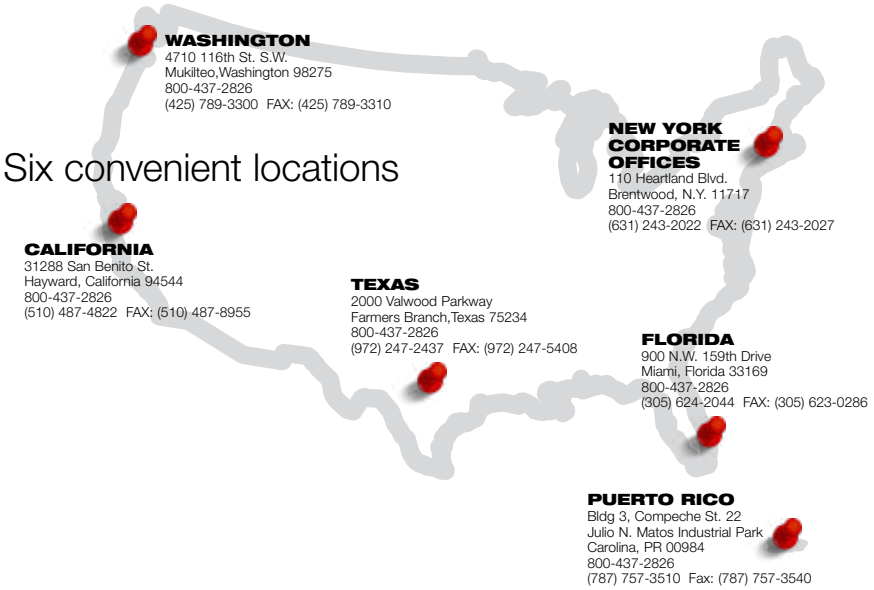

Contents

About Satco **2-5**
LED Indoor Lighting **6-17**
- LED Flat Panel Fixtures 8-12
- LED Troffer Fixtures 13
- LED Vapor Tight Surface Mount Fixtures 14
- LED Linear Hi-Bay Fixtures 15-16

Blink™ LED Flush Mount Fixtures **17-40**
- Blink™ Plus LED Surface Mount Fixtures 19-26
- Blink™ Plus LED 15" & 19" Fixture Suspension Kits 27
- Blink™ LED Round, Square Fixtures 28-34
- Blink™ LED Rectangular Fixtures 35
- Blink™ "Eco" LED Fixtures 36
- Blink™ "Slim" LED Fixtures 37
- Blink™ Accesspry Slim 7" & 9" Pendant Kits 38
- Blink™ Battery Backup Modules 39-40

LED Indoor Utility Fixtures **41-59**
- LED Ceiling Wraps 43
- LED Strip Fixtures 44
- LED Glamour LED Flush, Linear Ceiling Fixtures 45-46
- LED Glamour & Crispo LED Wall Sconces & Vanity Fixtures 47-48
- LED Link Fixtures 49
- Button Round LED Flush Fixtures 50
- 12" & 14" Range Voltage Operation LED Flush Fixtures 51
- 7" & 10" LED Disk Lights 52
- 7" & 10" High Lumen Disk Lights 53
- 11", 14" & 19" LED Flush Mount Fixtures 54-55
- 11" & 14" Range Voltage Operation LED Flush Fixtures 56-57
- LED Flush Mount Emergency Battery Backup Ready (EMR) 58-59
- 14" LED Flush Mount 60

LED Indoor/Outdoor Architectural Lighting **61-89**
- LED Dual & Single Head Security Lights 62-63
- LED Flood Lights 64-65
- LED Wall Mount Door/Corridor Fixtures 66-67
- LED Wall Packs 68-83
- LED Canopy Fixtures 84-85
- LED Wall Mount Carport/Parking Area Fixtures 86
- LED Vapor Proof Wall & Ceiling Fixtures 87
- LED Bulkhead Fixtures 88
- LED Up/Down Outdoor Wall Fixture 89

LED Recessed Retrofits **90-114**
- LED Step Lights 92-93
- Freedom™ Architectural LED Downlights & Retrofits 94-99
- 4", 5" & 6" LED Recessed Downlight Retrofits 100-101
- Satco Value Series 5"/6" LED Recessed Downlight Retrofits 102
- Quick Trim™ 4", 5"/6" LED Recessed Downlight Retrofits 103
- 4", 5"/6" Square Trim Recessed Downlight Retrofits 104-105
- 4", 5"/6" LED Direct Wire Edge-Lit Downlights 106-107
- 4", 5"/6" LED Direct Wire Downlights 108-109
- 6" & 8" LED Commercial Recessed Downlight Retrofits 110-113
- LED Ready Recessed Can Assemblies 114

LED Track Lighting **115-123**
- LED Track Heads 116-117
- LED Track Kits & Accessories 118-119

LED Under Cabinet & Cove **120-123**
- Thread™ Linear LED System Overview 121
- Connections & Accessories 122-123

Satco Smart Home Z Wave Enabled Devices **124-129**
- Smart Home Gear: 86-100 Plug-In Appliance Module 125
- Smart Home Gear: 86-101 Plug-In Dimmer Module 126
- Smart Home Gear: 86-102 In-Wall Light Switch 127
- Smart Home Gear: 86-103 In-Wall Dimmer 128
- Smart Home Gear: 86-104 3-Way Auxiliary Switch 129

Item Number Index **130-133**

At Satco, our business isn't about us.

Satco and Nuvo® and brands have grown to be industry leaders by offering you the widest selection of lamps, fixtures and lighting components.

The most innovative technology.
The highest standards of quality and efficiency. And a reputation for service earned one customer at a time for almost 50 years.

Satco. Setting the standards.
With a vast catalog of products built to the highest quality standards, massive inventories, a highly automated nationwide distribution network, and a growing investment in research and development, few lighting manufacturers can match Satco's depth of industry experience.

The widest selection.
Satco keeps homes across North America lit through the thousands of retail outlets we supply with replacements lamps and consumer lighting accessories. The residential and commercial building trades rely on Satco's comprehensive line of fixtures, track and outdoor lighting and lamps, which are widely available through electrical distributors across the country.

Lighting fixture manufacturers turn to Satco Logistics for on-time shipping of thousands of component parts in orders of any size, including lamps, ballasts, sockets, switches, cords, canopies and glassware of every description.

It's about you and your business.

The next standard in quality and efficiency.

Architectural LED lighting from Satco/NUVO.

Building codes everywhere set minimum safety standards for the lighting of virtually every structure. Nuvo LED fixtures line will certainly meet those standards, but do it more efficiently. LED lighting can save up to 80% on utility costs verses older technologies and still provide the lighting needed for offices, parking garages, warehouses and residences of all types, indoor or out.

Over 50 years of lighting leadership

Nuvo LED fixtures are keeping venues everywhere safe and efficiently lit using the best electrical components, materials and overall fixture engineering available.

Commercial/industrial indoor LED lighting.

Lighting larger spaces can be challenging simply due to the many different needs within one venue. That's why Nuvo has put together a well thought out product mix that offers numerous solutions. And each solution comes with the quality, efficiency and value Nuvo is known for. This combination makes lighting large industrial and commercial spaces--warehouses, retail floors, factories, loading docks, office buildings, high ceilings--easy. Now, entire venues can benefit from the lower energy costs, lower maintenance and lasting value LEDs offer.

LED Flat Panel Fixtures

(2 packs)

Even, consistent light.
Low maintenance.
High efficiency.

Features

- White finish
- DLC certified
- Maintenance free—no bulb to change
- Perfect, even light distribution
- Flicker-free driver
- CRI >80
- Ultra-slim edge-lit design
- Stamped and reinforced back plate
- Lasts 50,000 hours
- 0-10V dimming
- Universal input voltage—100-277V
- 3500K, 4000K and 5000K versions
- Recessed, surface mount and suspension kits available*
- Certified for damp locations
- 5 year warranty

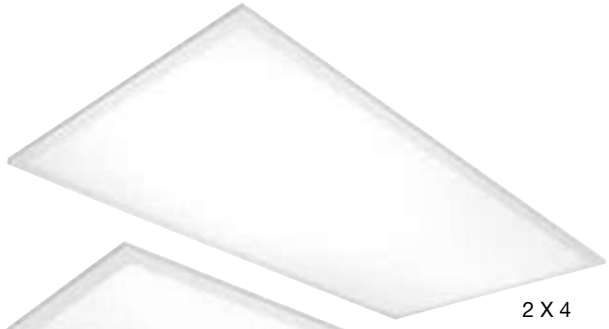

2 X 4

1 X 4

2 X 2

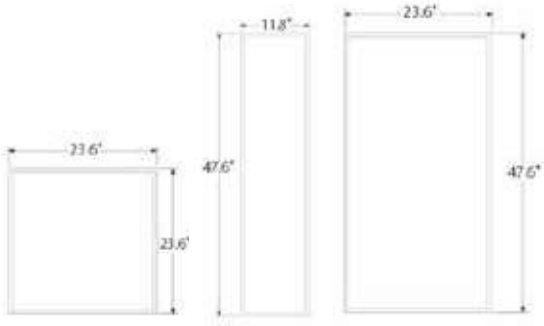

LED Flat Panel 2 Packs

Item Number	Lamp Description	W	Voltage	CRI	CCT	Lm	Life/ Hrs.	UPC	Pack
2 Ft x 2 Ft. LED Flat Panel									
65-321	2FT X 2FT LED FLAT PANEL 40 WATT	40	100-277	>80	3500K	4155	50K	045923453212	2
65-322	2FT X 2FT LED FLAT PANEL 40 WATT	40	100-277	>80	4000K	4194	50K	045923453229	2
65-323	2FT X 2FT LED FLAT PANEL 40 WATT	40	100-277	>80	5000K	4331	50K	045923453236	2
1 Ft x 4 Ft. LED Flat Panel									
65-339	1FT X 4FT LED FLAT PANEL 40 WATT	40	100-277	80	3500K	4029	50K	045923663390	2
65-340	1FT X 4FT LED FLAT PANEL 40 WATT	40	100-277	80	4000K	4098	50K	045923653407	2
65-341	1FT X 4FT LED FLAT PANEL 40 WATT	40	100-277	80	5000K	4194	50K	045923663413	2
2 Ft x 4 Ft. LED Flat Panel									
65-324	2FT X 4FT LED FLAT PANEL 50 WATT	50	100-277	>80	3500K	4906	50K	045923453243	2
65-325	2FT X 4FT LED FLAT PANEL 50 WATT	50	100-277	>80	4000K	4968	50K	045923453250	2
65-326	2FT X 4FT LED FLAT PANEL 50 WATT	50	100-277	>80	5000K	5139	50K	045923453267	2

*Accessories pg. 12

LED Premium Flat Panel Fixtures

(2 packs)

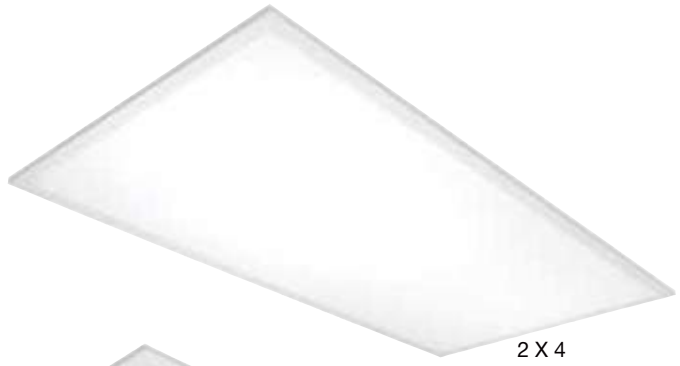

2 X 4

1 X 4

2 X 2

Features

- White finish
- DLC Premium certified
- Maintenance free—no bulb to change
- Perfect, even light distribution
- Flicker-free driver
- CRI >80
- Ultra-slim edge-lit design
- Stamped and reinforced back plate
- Last 50,000 hours
- 0-10V Dimming
- Universal input voltage — 100-277V
- Recessed, surface mount and suspension kits available*
- Certified for damp locations
- 5 Year warranty

LED Premium Flat Panel 2 Packs

Item Number	Lamp Description	W	V	CRI	CCT	Lm	Life/ Hrs.	UPC	Pack
2 Ft x 2 Ft. LED Premium Flat Panel									
65-371	2 Ft. x 2 Ft. LED Premium Flat Panel	40	120~277V	80	3500K	5000	50K	045923753718	2
65-372	2 Ft. x 2 Ft. LED Premium Flat Panel	40	120~277V	80	4000K	5200	50K	045923753725	2
65-373	2 Ft. x 2 Ft. LED Premium Flat Panel	40	120~277V	80	5000K	5200	50K	045923753732	2
2 Ft x 4 Ft. LED Premium Flat Panel									
65-374	2 Ft. x 4 Ft. LED Premium Flat Panel	50	120~277V	80	3500K	6250	50K	045923753749	2
65-375	2 Ft. x 4 Ft. LED Premium Flat Panel	50	120~277V	80	4000K	6500	50K	045923753756	2
65-376	2 Ft. x 4 Ft. LED Premium Flat Panel	50	120~277V	80	5000K	6500	50K	045923753763	2
1 Ft x 4 Ft. LED Premium Flat Panel									
65-377	1 Ft. x 4 Ft. LED Premium Flat Panel	40	120~277V	80	3500K	5000	50K	045923753749	2
65-378	1 Ft. x 4 Ft. LED Premium Flat Pane	40	120~277V	80	4000K	5200	50K	045923753756	2
65-379	1 Ft. x 4 Ft. LED Premium Flat Pane	40	120~277V	80	5000K	5200	50K	045923753763	2

*Accessories pg. 12

65-347, 65-351, 65-355

Integrated test button and indicator light

65-348, 65-352, 65-356

LED Flat Panel Fixtures/ EMERGENCY Battery Backup

Features

- White finish
- DLC certified
- Maintenance free—no bulb to change
- Perfect, even light distribution
- Flicker-free driver
- CRI >80
- Ultra-slim edge-lit design
- Stamped and reinforced back plate
- Integrated test button and indicator light
- 90 Minute battery run time
- No additional wiring steps
- Lasts 50,000 hours
- Universal input voltage - 100~277V
- Recessed, surface mount and suspension kits available*
- Suitable for damp locations
- 5 Year warranty

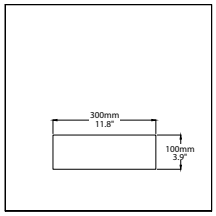

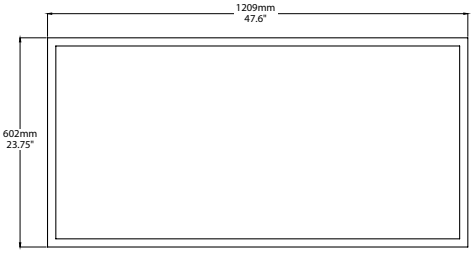

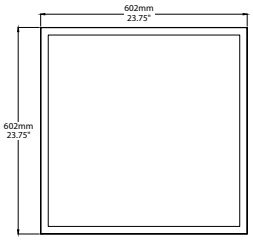

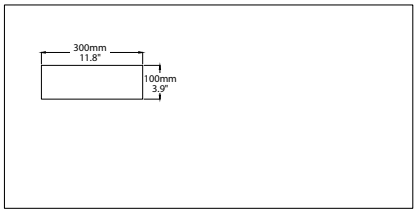

Item Number	Lamp Description	W	V	CRI	CCT	Lm	Life/ Hrs.	UPC
2 Ft x 2 Ft. LED Flat Panel/Emergency Battery Backup								
65-347	2 Ft. x 2 Ft. LED Flat Panel/Emergency Battery Backup	40	100~277V	80	3500K	4155	50K	045923653476
65-351	2 Ft. x 2 Ft. LED Flat Panel/Emergency Battery Backup	40	100~277V	80	4000K	4194	50K	045923663512
65-355	2 Ft. x 2 Ft. LED Flat Panel/Emergency Battery Backup	40	100~277V	80	5000K	4331	50K	045923673559
2 Ft x 4 Ft. LED Flat Panel/Emergency Battery Backup								
65-348	2 Ft. x 4 Ft. LED Flat Panel/Emergency Battery Backup	50	100~277V	80	3500K	4906	50K	045923653483
65-352	2 Ft. x 4 Ft. LED Flat Panel/Emergency Battery Backup	50	100~277V	80	4000K	4968	50K	045923663529
65-356	2 Ft. x 4 Ft. LED Flat Panel/Emergency Battery Backup	50	100~277V	80	5000K	5139	50K	045923653568

*Accessories pg. 12

65-333, 65-334, 65-335

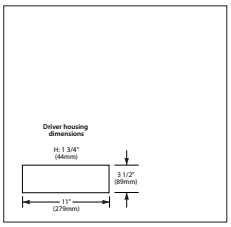

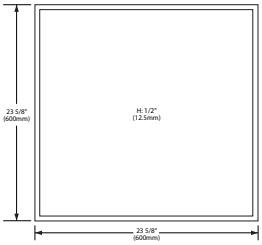

120-347V LED Flat Panel Fixtures

(2 packs)

65-336, 65-337, 65-338

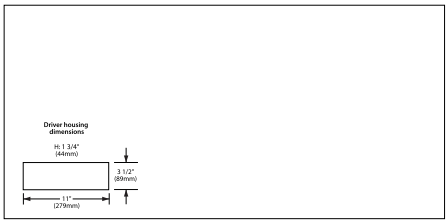

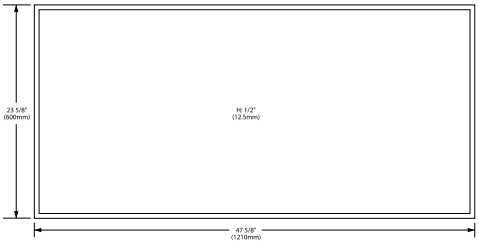

Features

- White finish
- DLC certified
- Maintenance free—no bulb to change
- Perfect, even light distribution
- Flicker-free driver
- CRI >80
- Ultra-slim edge-lit design
- Stamped and reinforced back plate
- Lasts 50,000 hours
- 0-10V Dimming
- Universal input voltage - 120~347V
- Recessed, surface mount and suspension kits available*
- Certified for damp locations
- 5 Year warranty

Item Number	Lamp Description	W	V	CRI	CCT	Lm	Life/ Hrs.	UPC	Pack
2 Ft x 2 Ft. LED Flat Panel									
65-333	2 Ft. x 2 Ft. LED Flat Panel	40	120~347V	80	3500K	4200	50K	045923453335	2
65-334	2 Ft. x 2 Ft. LED Flat Panel	40	120~347V	80	4000K	4400	50K	045923453342	2
65-335	2 Ft. x 2 Ft. LED Flat Panel	40	120~347V	80	5000K	4400	50K	045923453359	2
2 Ft x 4 Ft. LED Flat Panel									
65-336	2 Ft. x 4 Ft. LED Flat Panel	50	120~347V	80	3500K	5250	50K	045923453366	2
65-337	2 Ft. x 4 Ft. LED Flat Panel	50	120~347V	80	4000K	5500	50K	045923453373	2
65-338	2 Ft. x 4 Ft. LED Flat Panel	50	120~347V	80	5000K	5500	50K	045923453380	2

*Accessories pg. 12

LED Flat panel accessories

LED flat panel flush mount ceiling frame kits

LED flat panel suspension kit

Recessed Flange Kits

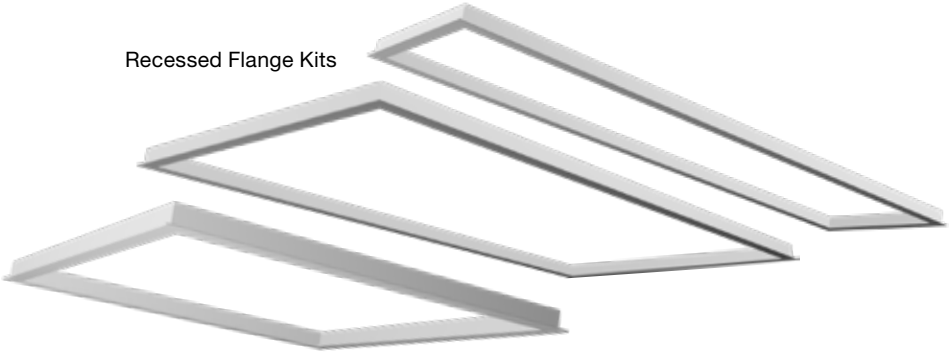

LED Flat Panel Accessories

Item Number	Description	Dimensions	Finish	UPC	Pack
65-361	1' x 4' LED FLAT PANEL FRAME KIT	47 ⅝" L x 11 ⅝" W x 3" D	White	045923559501	10/1
65-362	2' x 2' LED FLAT PANEL FRAME KIT	23 ⅝" L x 23 ⅝" W x 3" D	White	045923559518	10/1
65-363	2' x 4' LED FLAT PANEL FRAME KIT	47 ⅝" L x 23 ⅝" W x 3" D	White	045923559525	10/1
65-364	1' x 4' RECESSED FLANGE KIT	49" L x 13" W x 1½" D	White	045923673641	10/1
65-365	2'x 2' RECESSED FLANGE KIT	25½" L x 25" W x 1½" D	White	045923663598	10/1
65-366	2' x 4' RECESSED FLANGE KIT	49" L x 25" W x 1½" D	White	045923653667	10/1
65-367	4' SUSPENSION CABLE KIT			045923653674	100/1

LED Troffer fixtures

Even, consistent light. Low maintenance. High efficiency.

Applications / Features

- Volumetric design
- Acrylic linear prismatic lens
- Maintenance free—no bulb to change
- Even light distribution
- CRI >90
- Lasts 50,000 hours of continuous use
- 0-10V dimming
- Universal input voltage, 100V-277V
- Drop into T-bar grid
- Certified for damp locations
- 5 Year warranty

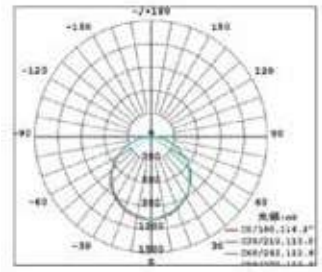

LED Troffer Fixtures

Item Number	Lamp Description	W	V	CRI	CCT	Lm	Efficiency (LM/W)	Life/ Hrs.	UPC	Pack
65-301	2FT X 2FT LED TROFFER 32 WATT	32	100-277	90	3500K	3213	100	50K	045923643019	1
65-302	2FT X 2FT LED TROFFER 32 WATT	32	100-277	90	4000K	3286	103	50K	045923643026	1
65-303	2FT X 2FT LED TROFFER 32 WATT	32	100-277	90	5000K	3292	103	50K	045923643033	1
65-304	2FT X 4FT LED TROFFER 40 WATT	40	100-277	90	3500K	4222	106	50K	045923643040	1
65-305	2FT X 4FT LED TROFFER 40 WATT	40	100-277	90	4000K	4376	109	50K	045923643057	1
65-306	2FT X 4FT LED TROFFER 40 WATT	40	100-277	90	5000K	4533	113	50K	045923643064	1
65-307	2FT X 4FT LED TROFFER 65 WATT	65	100-277	90	3500K	6543	101	50K	045923643071	1
65-308	2FT X 4FT LED TROFFER 65 WATT	65	100-277	90	4000K	6736	104	50K	045923643088	1
65-309	2FT X 4FT LED TROFFER 65 WATT	65	100-277	90	5000K	6898	106	50K	045923643095	1

LED Vapor tight surface mount fixtures

Efficiency and safety in one package

Applications

- Moisture-prone areas
- Cold storage/freezers
- Warehouses
- Food processing
- Parking structures
- Generally harsh environments

Features

- Available with or without occupancy sensor
- Tamper/vandal resistant
- High lumens/watt
- Heat resistant
- Optional suspension kit 62-1069
- 100-277 range voltage
- 0-10V dimming
- Wet location when using provided connector*
- CRI 80
- Available in 4000K and 5000K
- Long life—50,000 hours
- DLC certified
- 5 Year warranty

LED Vapor Tight Surface Mount Fixtures

Item Number	Lamp Description	W	V	Lm	CCT	IP	CRI	Lm P/W	Life/ Hrs.	Certific.	UPC	Pk./ Mstr.
62-1061	29W Vapor Proof Sfc. Mnt-4000K	29	100–277	3200	4000	IP65	80	112	50K	DLC 4.1	045923410611	1
62-1062	29W Vapor Proof Sfc. Mnt-5000K	29	100–277	3400	5000	IP65	80	118	50K	DLC 4.1	045923410628	1
62-1063	58W Vapor Proof Sfc. Mnt-4000K	58	100–277	6400	4000	IP65	80	110	50K	DLC 4.1	045923410635	1
62-1064	58W Vapor Proof Sfc. Mnt-5000K	58	100–277	7000	5000	IP65	80	120	50K	DLC 4.1	045923410642	1
62-1065	29W Vapor Proof Sfc. Mnt-4000K-w/OCC Sensor	29	100–277	3200	4000	IP65	80	112	50K	DLC 4.1	045923410659	1
62-1066	29W Vapor Proof Sfc. Mnt-5000K-w/OCC Sensor	29	100–277	3400	5000	IP65	80	118	50K	DLC 4.1	045923410666	1
62-1067	58W Vapor Proof Sfc. Mnt-4000K-w/OCC Sensor	58	100–277	6400	4000	IP65	80	110	50K	DLC 4.1	045923510670	1
62-1068	58W Vapor Proof Sfc. Mnt-5000K-w/OCC Sensor	58	100–277	7000	5000	IP65	80	120	50K	DLC 4.1	045923410680	1
Accessories												
62-1069	Suspension Kit Set (2 per set)										045923410697	50

LED Linear hi–bay fixtures

Applications

- Large commercial and industrial spaces
- High ceilings
- Warehouses
- Retail
- Factories
- Loading docks

Features

- Broad, even light distribution
- 130 lumens per watt
- 100-277 range voltage
- 4000K
- CRI 80
- 0-10V Dimming
- IP20 rated
- 20" Chain suspension kit included
- Damp location
- Long Life—50,000 hours
- DLC certified
- 5 Year warranty

Optional sensor (shown)
Item no. 86-201

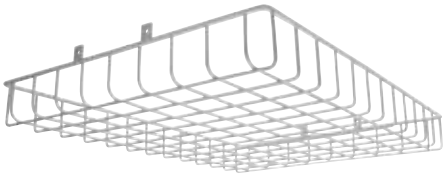

Optional Protective Cage
Item no. 62-1077 (2')
Item no. 62-1078 (4')

Optional Linear Hi-Bay Yoke Mount
Item no. 62-1075 (2')
Item no. 62-1076 (4')

LED Linear Hi–Bay Fixtures

Item Number	Lamp Description	W	Lm	CCT	CRI	Lumen P/W	Dimming	Voltage	Certificate	Life/ Hrs.	UPC	Pack
62-1071	75W – 2 Foot Linear Hi-Bay – 4000K	75	9750	4000K	80	130	0–10V	100–277	DLC 4.1	50K	045923410710	1
62-1072	100W – 2 Foot Linear Hi-Bay – 4000K	100	13000	4000K	80	130	0–10V	100–277	DLC 4.1	50K	045923410727	1
62-1073	150W – 2 Foot Linear Hi-Bay – 4000K	150	19500	4000K	80	130	0–10V	100–277	DLC 4.1	50K	045923410734	1
62-1074	210W – 4 Foot Linear Hi-Bay – 4000K	210	27300	4000K	80	130	0–10V	100–277	DLC 4.1	50K	045923410741	1
Accessories												
62-1075	2 Foot Linear Hi-Bay Yoke Mount										045923510755	10
62-1076	4 Foot Linear Hi-Bay Yoke Mount										045923510762	5
62-1077	2 Foot Protective Cage Accessory										045923210778	5
62-1078	4 Foot Protective Cage Accessory										045923210785	2

LED circular hi-bay fixture

Applications

- Commercial
- Warehouses
- Gymnasiums
- Industrial facilities
- Retail

Features

- 151W or 215W
- White finish
- Rugged construction
- Die-cast aluminum body
- High impact polycarbonate frosted lens
- Optional occupancy sensor - Item no. 86/201
- UV stabilized powder coated finish
- 120-277 V
- -40˚C Starting temperature
- 5000K
- 151W, 250–400W MH equivalent
- 215W, 1000W MH equivalent
- Suitable for wet locations
- 54,000 Hour life
- 5 Year warranty
- IP66

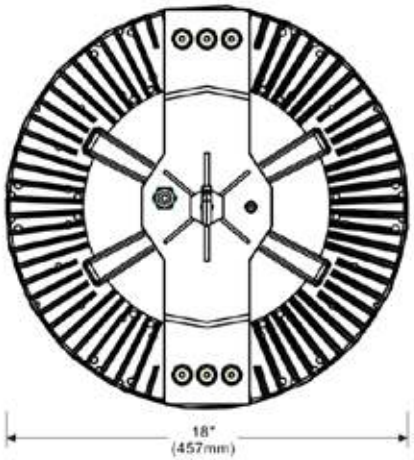

Optional sensor
Item no. 86-201

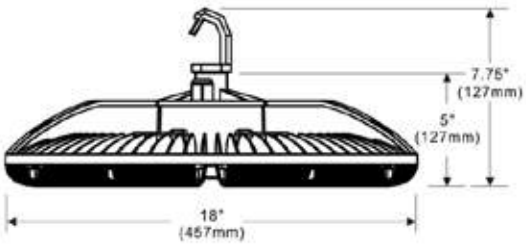

LED Circular Hi-Bay Fixture

WET LOCATION | 5000 K | 80 CRI | 54,000 HOURS | DLC PREMIUM | c UL us LISTED | RoHS COMPLIANT

Item Number	Lamp Description	W	V	Finish	CCT	Lm	CRI	Life/ Hrs.	UPC	Pack/ Mstr.
65-088	151W CIRCULAR HI-BAY	151	120-277	White	5000K	19112	80	54K	045923650888	1
65-089	215W CIRCULAR HI-BAY	215	120-277	White	5000K	27678	80	54K	045923650895	1

Blink™ indoor commercial/residential LED flush mount fixtures

So simple, so innovative – perfect for so many projects. That's Blink. Sleek, efficient and easy to install. Blink again.

Blink LED fixtures come in the sizes, shapes, finishes and specifications that make solving most any lighting problem easy. No room for a recessed can fixture? No problem. If there's only a 3" or 4" junction box or a pancake box to work with, mounting is simple, and Blink is your LED lighting solution. Blink's ultra-sleek design – only 1" deep – makes it the answer for so many hard to light spaces. Blink is perfect for so many venues both residential and commercial. Kitchens, bathrooms, hallways, meeting rooms, offices and retail venues all benefit from this simple, efficient LED fixture.

1' x 1' and 2' x 2' Blink™ Plus LED surface mount fixtures

Applications

- Kitchens
- Bathrooms
- Hallways
- Meeting rooms
- Hospitality
- Health care
- Offices
- Retail

62-1151

Features

- Dimmable, 120V only**
- White finish
- Damp location
- Ultra-low profile made for j-box installs
- Unique quick-lock mounting bracket
- Mounts directly to 3" and 4" junction boxes
- 100-277V
- ENERGY STAR certified*
- 5 Year limited warranty***

Installation for 2'x2' fixtures is easy using the unique quick-lock mounting bracket.

Quick-lock mounting bracket for all 1'x1' fixtures.

Blink™ Plus LED Surface Mount Fixtures

Item Number	Lamp Description	W	Bulb Type	V	Finish	CRI	CCT	Lm	Life/ Hrs.	Dimensions	UPC	Pack
80 CRI												
62-1151*	18W/LED/1X1/FLUSH/5K/WH	18	LED	100-277	White	80	5000K	1600	50K	12"L x 12"W x ¾"D	045923511516	6/1
62-1153*	45W/LED/2X2/FLUSH/5K/WH	45	LED	100-277	White	80	5000K	4050	50K	24"L x 24"W x ¾"D	045923511530	2/1
90 CRI												
62-1051*	18W/LED/1X1/FLUSH/3K/WH	18	LED	100-277	White	90	3000K	1300	50K	12"L x 12"W x ¾"D	045923410512	6/1
62-1251*	18W/LED/1X1/FLUSH/4K/WH	18	LED	100-277	White	90	4000K	1365	50K	12"L x 12"W x ¾"D	045923512513	6/1
62-1053*	45W/LED/2X2/FLUSH/3K/WH	45	LED	100-277	White	90	3000K	3500	50K	24"L x 24"W x ¾"D	045923410536	2/1
62-1253*	45W/LED/2X2/FLUSH/4K/WH	45	LED	100-277	White	90	4000K	3675	50K	24"L x 24"W x ¾"D	045923512537	2/1

** Consult Satco or visit www.satco.com for an up to date dimmer compatibility list. *** See separate warranty for complete terms and conditions.
† Complies with NEC code 410.16

1' x 2' Blink™ Plus LED surface mount fixtures

Applications

- Kitchens
- Bathrooms
- Hallways
- Meeting rooms
- Hospitality
- Health care
- Offices
- Retail

Features

- Dimmable, 120V only**
- White finish
- Damp location
- Ultra-low profile made for j-box installs
- Unique quick-lock mounting bracket
- Mounts directly to 3" and 4" junction boxes
- 100-277V
- ENERGY STAR certified*
- 5 Year limited warranty***

Unique quick-lock mounting bracket

** DIMMABLE DAMP LOCATION * ENERGY STAR

Blink Plus LED Surface Mount Fixtures

Item Number	Lamp Description	W	Bulb Type	Finish	V	CRI	CCT	Lm	Life/ Hrs.	UPC	Pack
80 CRI											
62-1152	22W/LED/1X2/FLUSH/5K/WH	22	LED	White	100-277	80	5000K	1900	50K	045923511523	4/1
90 CRI											
62-1052*	22W/LED/1X2/FLUSH/3K/WH	22	LED	White	100-277	90	3000K	1650	50K	045923410529	4/1
62-1252*	22W/LED/1X2/FLUSH/4K/WH	22	LED	White	100-277	90	4000K	1735	50K	045923512520	4/1

** Consult Satco or visit www.satco.com for an up to date dimmer compatibility list. *** See separate warranty for complete terms and conditions.

1' x 4' Blink™ Plus LED surface mount fixtures

Applications

- Kitchens
- Bathrooms
- Hallways
- Meeting rooms
- Hospitality
- Health care
- Offices
- Retail

Features

- Dimmable, 120V only**
- White finish
- Damp location
- Ultra-low profile made for j-box installs
- Unique quick-lock mounting bracket
- Mounts directly to 3" and 4" junction boxes
- 100-277V
- ENERGY STAR certified*
- 5 Year limited warranty***

Unique quick-lock mounting bracket

** DIMMABLE DAMP LOCATION * ENERGY STAR

Blink Plus LED Surface Mount Fixtures

Item Number	Lamp Description	W	Bulb Type	V	CRI	CCT	Lm	Life/ Hrs.	Finish	UPC	Pack
80 CRI											
62-1154	45W/LED/1X4/FLUSH/5K/WH	45	LED	100-277	80	5000K	4050	50K	White	045923511547	2/1
90 CRI											
62-1054*	45W/LED/1X4/FLUSH/3K/WH	45	LED	100-277	90	3000K	3600	50K	White	045923410543	2/1
62-1254*	45W/LED/1X4/FLUSH/4K/WH	45	LED	100-277	90	4000K	3780	50K	White	045923512544	2/1

** Consult Satco or visit www.satco.com for an up to date dimmer compatibility list. *** See separate warranty for complete terms and conditions.

Blink™ Plus LED linear surface mount fixtures

Applications

- Kitchens
- Bathrooms
- Hallways
- Meeting rooms
- Hospitality
- Health care
- Offices
- Retail

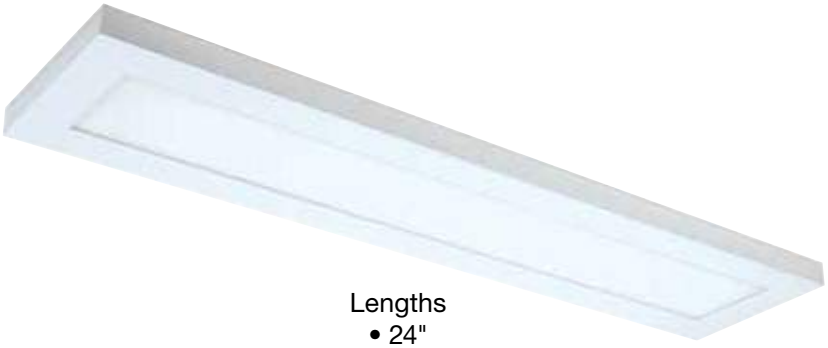

Lengths
- 24"
- 36"
- 48"

Features

- Dimmable, 120V only**
- White finish
- Damp location
- Ultra-low profile made for j-box installs
- Unique quick-lock mounting bracket
- Mounts directly to 3" and 4" junction boxes
- 100-277V
- ENERGY STAR certified*
- 5 Year limited warranty***

Unique quick-lock mounting bracket

Blink Plus LED Surface Mount Fixtures

** DIMMABLE DAMP LOCATION * ENERGY STAR

Item Number	Lamp Description	W	Bulb Type	Finish	V	CRI	CCT	Lm	Life/ Hrs.	UPC	Pack
80 CRI											
62-1155	22W/LED/5.5"X24"/FLUSH/5K/WH	22	LED	White	100-277	80	5000K	1870	50K	045923511554	6/1
62-1156	30W/LED/5.5"X36"/FLUSH/5K/WH	30	LED	White	100-277	80	5000K	2600	50K	045923511561	4/1
62-1157	40W/LED/5.5"X48"/FLUSH/5K/WH	40	LED	White	100-277	80	5000K	3300	50K	045923511578	4/1
90 CRI											
62-1055*	22W/LED/5.5"X24"/FLUSH/3K/WH	22	LED	White	100-277	90	3000K	1600	50K	045923410550	6/1
62-1056*	30W/LED/5.5"X36"/FLUSH/3K/WH	30	LED	White	100-277	90	3000K	2100	50K	045923410567	4/1
62-1057*	40W/LED/5.5"X48"/FLUSH/3K/WH	40	LED	White	100-277	90	3000K	2800	50K	045923410574	4/1
62-1255*	22W/LED/5.5"X24"/FLUSH/4K/WH	22	LED	White	100-277	90	4000K	1680	50K	045923512551	6/1
62-1256*	30W/LED/5.5"X36"/FLUSH/4K/WH	30	LED	White	100-277	90	4000K	2205	50K	045923512568	4/1
62-1257*	40W/LED/5.5"X48"/FLUSH/4K/WH	40	LED	White	100-277	90	4000K	2940	50K	045923512575	4/1

** Consult Satco or visit www.satco.com for an up to date dimmer compatibility list. *** See separate warranty for complete terms and conditions.

1' x 1' and 2' x 2' Blink™ Plus Profile LED surface mount fixtures

Bronze Finish
62-1181 1'x1' shown

Gunmetal Finish
62-1171 1'x1' shown

Applications

- Kitchens • Bathrooms • Hallways
- Meeting rooms • Hospitality • Health care
- Offices • Retail • Closets†

Features

- Dimmable*, 120V only**
- Damp location listed
- Gunmetal or Bronze finish
- Ultra-low profile only 1" deep
- Unique quick-lock mounting bracket
- Mounts directly to 3" and 4" junction boxes
- 100-277V
- 90 CRI
- ENERGY STAR certified
- 5 Year limited warranty***

Installation is easy using the unique quick-lock mounting brackets.

Quick-lock mounting bracket for 62-1171 & 62-1181

Blink™ Plus Profile LED Surface Mount Fixtures

Item Number	Lamp Description	W	V	CRI	CCT	Lm	Finish	Life/ Hrs.	Dimensions	UPC	Pk.
62-1171	18W/LED/1X1X1/FLUSH/3K	18	100-277V	90	3000K	1300	GUNMETAL	50K	12"L x 12"W x 1"D	045923511714	6
62-1173	45W/LED/2X2X1/FLUSH/3K	45	100-277V	90	3000K	3500	GUNMETAL	50K	24"L x 24"W x 1"D	045923511738	2
62-1181	18W/LED/1X1X1/FLUSH/3K	18	100-277V	90	3000K	1300	BRONZE	50K	12"L x 12"W x 1"D	045923511813	6
62-1183	45W/LED/2X2X1/FLUSH/3K	45	100-277V	90	3000K	3500	BRONZE	50K	24"L x 24"W x 1"D	045923511837	2
62-1371	18W/LED/1X1/FLUSH/3K	18	100-277V	90	3000K	1300	WHITE	50K	12"L x 12"W x 1"D	045923713712	6
62-1373	45W/LED/2X2/FLUSH/3K	45	100-277V	90	3000K	3500	WHITE	50K	24"L x 24"W x 1"D	045923713736	2
62-1381	18W/LED/1X1/FLUSH/4K	18	100-277V	90	4000K	1365	WHITE	50K	12"L x 12"W x 1"D	045923713811	6
62-1383	45W/LED/2X2/FLUSH/4K	45	100-277V	90	4000K	3780	WHITE	50K	24"L x 24"W x 1"D	045923713835	2

* Dimmable at 120V only. ** Consult Satco or visit www.satco.com for an up to date dimmer compatibility list. *** See separate warranty for complete terms and conditions.
† Complies with NEC code 410.16

1' x 2' and 1' x 4' Blink™ Plus Profile LED surface mount fixtures

Gunmetal Finish
62-1172 1'x2' shown

Applications

- Kitchens • Bathrooms • Hallways
- Meeting rooms • Hospitality • Health care
- Offices • Retail • Closets†

Features

- Dimmable*, 120V only**
- Damp location listed
- Gunmetal or Bronze finish
- Ultra-low profile only 1" deep
- Unique quick-lock mounting bracket
- Mounts directly to 3" and 4" junction boxes
- 100-277V
- 90 CRI
- ENERGY STAR certified
- 5 Year limited warranty***

Bronze Finish
62-1184 1'x4' shown

Installation is easy using the unique quick-lock mounting brackets.

* DIMMABLE DAMP LOCATION † nec ENERGY STAR

Blink™ Plus Profile LED Surface Mount Fixtures

Item Number	Lamp Description	W	V	CRI	CCT	Lm	Finish	Life/ Hrs.	Dimensions	UPC	Pk.
62-1172	22W/LED/1X2X1/FLUSH/3K	22	100-277V	90	3000K	1650	GUNMETAL	50K	12"L x 24"W x 1"D	045923511721	4
62-1174	45W/LED/1X4X1/FLUSH/3K	45	100-277V	90	3000K	3600	GUNMETAL	50K	12"L x 48"W x 1"D	045923511745	2
62-1182	22W/LED/1X2X1/FLUSH/3K	22	100-277V	90	3000K	1650	BRONZE	50K	12"L x 24"W x 1"D	045923511820	4
62-1184	45W/LED/1X4X1/FLUSH/3K	45	100-277V	90	3000K	3600	BRONZE	50K	12"L x 48"W x 1"D	045923511844	2
62-1372	22W/LED/1X2/FLUSH/3K	22	100-277V	90	3000K	1650	WHITE	50K	12"L x 24"W x 1"D	045923713729	4
62-1374	45W/LED/1X4/FLUSH/3K	45	100-277V	90	3000K	3600	WHITE	50K	12"L x 48"W x 1"D	045923713743	2
62-1382	22W/LED/1X2/FLUSH/4K	22	100-277V	90	4000K	1735	WHITE	50K	12"L x 24"W x 1"D	045923713828	4
62-1384	45W/LED/1X4/FLUSH/4K	45	100-277V	90	4000K	3780	WHITE	50K	12"L x 48"W x 1"D	045923713842	2

* Dimmable at 120V only. ** Consult Satco or visit www.satco.com for an up to date dimmer compatibility list. *** See separate warranty for complete terms and conditions.
† Complies with NEC code 410.16

Blink™ Plus Profile LED linear surface mount fixtures

Applications

- Kitchens • Bathrooms • Hallways
- Meeting rooms • Hospitality • Health care
- Offices • Retail • Closets†

Features

- Dimmable*, 120V only**
- Damp location listed
- Gunmetal or Bronze finish
- Ultra-low profile only 1" deep
- Unique quick-lock mounting bracket
- Mounts directly to 3" and 4" junction boxes
- 100-277V
- 90 CRI
- ENERGY STAR certified
- 5 Year limited warranty***

Bronze Finish
62-1187 49" x 7" shown

Installation is easy using the unique quick-lock mounting brackets.

Blink™ Plus Profile LED Surface Mount Fixtures

Item Number	Lamp Description	W	V	CRI	CCT	Lm	Finish	Life/ Hrs.	Dimensions	UPC	Pk.
62-1175	22W/LED/7"X25"X1"/FLUSH/3K	22	100-277V	90	3000K	1600	GUNMETAL	50K	25"L x 7"W x 1"D	045923511752	6
62-1176	30W/LED/7"X38"X1"/FLUSH/3K	30	100-277V	90	3000K	2100	GUNMETAL	50K	38"L x 7"W x 1"D	045923511769	4
62-1177	40W/LED/7"X49"X1"/FLUSH/3K	40	100-277V	90	3000K	2800	GUNMETAL	50K	49"L x 7"W x 1"D	045923511776	4
62-1185	22W/LED/7"X25"X1"/FLUSH/3K	22	100-277V	90	3000K	1600	BRONZE	50K	25"L x 7"W x 1"D	045923511851	6
62-1186	30W/LED/7"X38"X1"/FLUSH/3K	30	100-277V	90	3000K	2100	BRONZE	50K	38"L x 7"W x 1"D	045923511868	4
62-1187	40W/LED/7"X49"X1"/FLUSH/3K	40	100-277V	90	3000K	2800	BRONZE	50K	49"L x 7"W x 1"D	045923511875	4
62-1375	22W/LED/7"X25"/FLUSH/3K	22	100-277V	90	3000K	1600	WHITE	50K	25"L x 7"W x 1"D	045923713750	6
62-1376	30W/LED/7"X38"/FLUSH/3K	30	100-277V	90	3000K	2100	WHITE	50K	38"L x 7"W x 1"D	045923713767	4
62-1377	40W/LED/7"X49"/FLUSH/3K	40	100-277V	90	3000K	2800	WHITE	50K	49"L x 7"W x 1"D	045923713774	4
62-1385	22W/LED/7"X25"/FLUSH/4K	22	100-277V	90	4000K	1680	WHITE	50K	25"L x 7"W x 1"D	045923713859	6
62-1386	30W/LED/7"X38"/FLUSH/4K	30	100-277V	90	4000K	2205	WHITE	50K	38"L x 7"W x 1"D	045923713866	4
62-1387	40W/LED/7"X49"/FLUSH/4K	40	100-277V	90	4000K	2940	WHITE	50K	49"L x 7"W x 1"D	045923713873	4

* Dimmable at 120V only. ** Consult Satco or visit www.satco.com for an up to date dimmer compatibility list. *** See separate warranty for complete terms and conditions.
† Complies with NEC code 410.16

Blink™ Plus 15" and 19" LED surface mount fixtures

62-1191

62-1192

Applications

- Kitchens
- Bathrooms
- Hallways
- Meeting rooms
- Hospitality
- Health care
- Offices
- Retail
- Closets†

Features

- Dimmable, 120V only**
- White finish
- Damp location listed
- Ultra-low profile only 1" deep
- Unique quick-lock mounting bracket
- Mounts directly to 3" and 4" junction boxes
- 120-277V
- 90 CRI
- ENERGY STAR certified*
- 5 Year limited warranty***

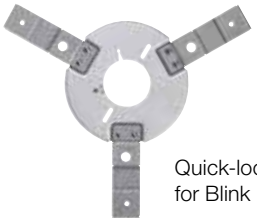

Quick-lock mounting bracket for Blink Plus 15" & 19" fixtures

Blink™ Plus 15" & 19" LED Surface Mount Fixtures

Item Number	Lamp Description	W	V	CRI	CCT	Lm	Finish	Life/ Hrs.	Dimensions	UPC	Pk./ Mstr.
62-1191*	26W/LED/15" RND/FLUSH/3K/WH	26	120-277	90	3000K	2000	White	50K	15"Dia. x 1"D	045923511912	4/1
62-1291*	26W/LED/15" RND/FLUSH/4K/WH	26	120-277	90	4000K	2100	White	50K	15"Dia. x 1"D	045923512919	4/1
62-1192*	30W/LED/19" RND/FLUSH/3K/WH	30	120-277	90	3000K	2400	White	50K	19"Dia. x 1"D	045923511929	4/1
62-1292*	30W/LED/19" RND/FLUSH/4K/WH	30	120-277	90	4000K	2520	White	50K	19"Dia. x 1"D	045923512926	4/1
Accessories											
62-1294	BLINK 15" PEND SUSPENSION KIT	12' Wire			3x12' Suspension cables					045923512940	6/1
62-1295	BLINK 19" PEND SUSPENSION KIT	12' Wire			3x12' Suspension cables					045923512957	6/1

** Consult Satco or visit www.satco.com for an up to date dimmer compatibility list. *** See separate warranty for complete terms and conditions.
† Complies with NEC code 410.16

62-1294
15" Suspension Kit
(Fixture sold separately)

62-1295
19" Suspension Kit
(Fixture sold separately)

Blink™ Plus LED 15" and 19" fixture suspension kits

Features

- For use with Blink Plus 15" and 19" round LED fixtures
- White finish
- Includes 12' of wire
- Includes (3) 12' suspension cables
- Fixtures not included

Blink™ Plus LED 15" & 19" Fixture Suspension Kits

Item Number	Lamp Description			UPC	Pack/ Master
62-1294	BLINK 15" PEND SUSPENSION KIT	12' Wire	3x12' Suspension cables	045923512940	12/1
62-1295	BLINK 19" PEND SUSPENSION KIT	12' Wire	3x12' Suspension cables	045923512957	12/1

NOTE: Fixtures sold separately

White

5.5" Round Blink™ LED fixtures

Brushed Nickel

Applications

- Kitchens
- Bathrooms
- Hallways
- Family rooms
- Offices

Bronze

Features

- Dimmable**
- Wet location listed
- Available in White, Brushed Nickel, and Bronze
- Mounts directly to 3" and 4" junction boxes
- ENERGY STAR certified*
- 5 Year limited warranty***

Installation is easy using the universal mounting plate.

5.5" LED Round Fixtures

Item Number	Lamp Description	W	V	Finish	CRI	CCT	Lm	Bm	M.O.L. (Inches)	Life/ Hrs.	UPC	Pack/ Mstr.
S29320*†	10.5W/LED/5.5"FLUSH/27K/RD/WH	10.5	120	White	90	2700K	580	108°	1"	50K	045923293207	12/1
S29321*†	10.5W/LED/5.5"FLUSH/27K/RD/BN	10.5	120	Br. Nickel	90	2700K	580	108°	1"	50K	045923293214	12/1
S29322*†	10.5W/LED/5.5"FLUSH/27K/RD/BRZ	10.5	120	Bronze	90	2700K	580	108°	1"	50K	045923293221	12/1
S29323*†	10.5W/LED/5.5"FLUSH/30K/RD/WH†	10.5	120	White	90	3000K	600	108°	1"	50K	045923293238	12/1
S29359*†	10W/LED/5"FLUSH/30K/RD/BN	10.5	120	Br. Nickel	90	3000K	600	108°	1"	50K	045923293597	12/1
S21500†	10.5W/LED/5.5"FLUSH/30K/RD/BRZ	10.5	120	Bronze	90	3000K	600	108°	1"	50K	045923205002	12/1
S21501†	10.5W/LED/5.5"FLUSH/40K/RD/WH	10.5	120	White	90	4000K	600	108°	1"	50K	045923205019	12/1
S21502	10.5W/LED/5.5"FLUSH/50K/RD/WH	10.5	120	White	80	5000K	600	108°	1"	50K	045923205026	12/1

** Consult Satco or visit www.satco.com for an up to date dimmer compatibility list. *** See separate warranty for complete terms and conditions.

5.5" Square Blink™ LED fixtures

White

Brushed Nickel

Bronze

Applications

- Kitchens
- Bathrooms
- Hallways
- Family rooms
- Offices

Features

- Dimmable**
- Wet location listed
- Available in White, Brushed Nickel, and Bronze
- Mounts directly to 3" and 4" junction boxes
- ENERGY STAR certified*
- 5 Year limited warranty***

Installation is easy using the universal mounting plate.

5.5" LED Square Fixtures

Item Number	Lamp Description	W	V	Finish	CRI	CCT	Lm	Bm	M.O.L. (Inches)	Life/ Hrs.	UPC	Pack/ Mstr.
S29324*†	10.5W/LED/5.5"FLUSH/27K/SQ/WH	10.5	120	White	90	2700K	580	108°	1"	50K	045923293245	12/1
S29325*†	10.5W/LED/5.5"FLUSH/27K/SQ/BN	10.5	120	Br. Nickel	90	2700K	580	108°	1"	50K	045923293252	12/1
S29326*†	10.5W/LED/5.5"FLUSH/27K/SQ/BRZ	10.5	120	Bronze	90	2700K	580	108°	1"	50K	045923293269	12/1
S29327*†	10.5W/LED/5.5"FLUSH/30K/SQ/WH	10.5	120	White	90	3000K	600	108°	1"	50K	045923293276	12/1
S21503†	10.5W/LED/5.5"FLUSH/30K/SQ/BN	10.5	120	Br. Nickel	90	3000K	600	108°	1"	50K	045923205033	12/1
S21504†	10.5W/LED/5.5"FLUSH/30K/SQ/BRZ	10.5	120	Bronze	90	3000K	600	108°	1"	50K	045923205040	12/1
S21505†	10.5W/LED/5.5"FLUSH/40K/SQ/WH	10.5	120	White	90	4000K	600	108°	1"	50K	045923275050	12/1
S21506	10.5W/LED/5.5"FLUSH/50K/SQ/WH	10.5	120	White	80	5000K	600	108°	1"	50K	045923215063	12/1

** Consult Satco or visit www.satco.com for an up to date dimmer compatibility list. *** See separate warranty for complete terms and conditions.

7" Round Blink™ LED fixtures

White

Brushed Nickel

Bronze

Applications

- Kitchens
- Bathrooms
- Hallways
- Family rooms
- Offices

Features

- Dimmable**
- Wet location
- Available in White, Brushed Nickel, and Bronze
- Mounts directly to 3" and 4" junction boxes
- ENERGY STAR certified*
- 5 Year limited warranty***

Installation is easy using the universal mounting plate.

7" LED Round Fixtures

Item Number	Lamp Description	W	V	Finish	CRI	CCT	Lm	Bm	M.O.L. (Inches)	Life/ Hrs.	UPC	Pack/ Mstr.
S29328*†	13.5W/LED/7FLUSH/27K/RD/WH	13.5	120	White	90	2700K	800	108°	1"	50K	045923293283	12/1
S29329*†	13.5W/LED/7FLUSH/27K/RD/BN	13.5	120	Br. Nickel	90	2700K	800	108°	1"	50K	045923293290	12/1
S29330*†	13.5W/LED/7FLUSH/27K/RD/BRZ	13.5	120	Bronze	90	2700K	800	108°	1"	50K	045923293306	12/1
S29331*†	13.5W/LED/7FLUSH/30K/RD/WH	13.5	120	White	90	3000K	820	108°	1"	50K	045923293313	12/1
S29349*†	13.5W/LED/7FLUSH/30K/RD/BN	13.5	120	Br. Nickel	90	3000K	820	108°	1"	50K	045923293498	12/1
S21507†	13.5W/LED/7"FLUSH/30K/RD/BRZ	13.5	120	Bronze	90	3000K	820	108°	1"	50K	045923205071	12/1
S29655*†	13.5W/LED/7FLUSH/40K/RD/WH	13.5	120	White	90	4000K	820	108°	1"	50K	045923296550	12/1
S29360*	13.5W/LED/7FLUSH/50K/RD/WH	13.5	120	White	90	5000K	900	108°	1"	50K	045923293603	12/1
0-10V Dimming												
S29367*†	13.5W/LED/7FLUSH/30K/RD/WH/0-10VD	13.5	120	White	90	3000K	820	108°	1"	50K	045923293672	12/1
S21508†	13.5W/LED/7"/40K/RD/WH/0-10VD	13.5	120	White	80	4000K	820	108°	1"	50K	045923205088	12/1
277V												
S29357†	13.5W/LED/7"FLUSH/30K/RD/WH/277V	13.5	277	White	90	3000K	820	108°	1"	50K	045923293573	12/1

** Consult Satco or visit www.satco.com for an up to date dimmer compatibility list. *** See separate warranty for complete terms and conditions.

7" Square Blink™ LED fixtures

White

Brushed Nickel

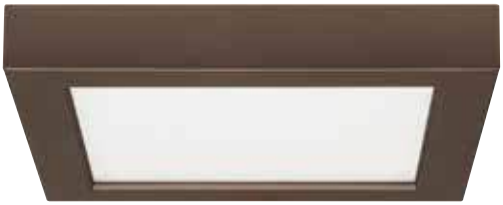

Bronze

Applications

- Kitchens
- Bathrooms
- Hallways
- Family rooms
- Offices

Features

- Dimmable**
- Wet location
- Available in White, Brushed Nickel, and Bronze
- Mounts directly to 3" and 4" junction boxes
- ENERGY STAR certified*
- 5 Year limited warranty***

Installation is easy using the universal mounting plate.

7" LED Square Fixtures

Item Number	Lamp Description	W	V	Finish	CRI	CCT	Lm	Bm	M.O.L. (Inches)	Life/ Hrs.	UPC	Pack/ Mstr.
S29332*†	13.5W/LED/7FLUSH/27K/SQ/WH	13.5	120	White	90	2700K	780	108°	1"	50K	045923293320	12/1
S29333*†	13.5W/LED/7FLUSH/27K/SQ/BN	13.5	120	Br. Nickel	90	2700K	780	108°	1"	50K	045923293337	12/1
S29334*†	13.5W/LED/7FLUSH/27K/SQ/BRZ	13.5	120	Bronze	90	2700K	780	108°	1"	50K	045923293344	12/1
S29335*†	13.5W/LED/7FLUSH/30K/SQ/WH	13.5	120	White	90	3000K	800	108°	1"	50K	045923293351	12/1
S21509†	13.5W/LED/7"FLUSH/30K/SQ/BN	13.5	120	Br. Nickel	90	3000K	800	108°	1"	50K	045923205095	12/1
S21510†	13.5W/LED/7"FLUSH/30K/SQ/BRZ	13.5	120	Bronze	90	3000K	800	108°	1"	50K	045923205101	12/1
S21511†	13.5W/LED/7"FLUSH/40K/SQ/WH	13.5	120	White	90	4000K	800	108°	1"	50K	045923205118	12/1
S29361*	13.5W/LED/7FLUSH/50K/SQ/WH	13.5	120	White	80	5000K	880	108°	1"	50K	045923293610	12/1

** Consult Satco or visit www.satco.com for an up to date dimmer compatibility list. *** See separate warranty for complete terms and conditions.

9" Round Blink™ LED fixtures

White

Brushed Nickel

Bronze

Installation is easy using the universal mounting plate.

Applications

- Kitchens
- Bathrooms
- Hallways
- Family rooms
- Offices

Features

- Dimmable**
- Wet location
- Available in White, Brushed Nickel, and Bronze
- Mounts directly to 3" and 4" junction boxes
- ENERGY STAR certified*
- 5 Year limited warranty***

9" LED Round Fixtures

** DIMMABLE WET LOCATION † Efficiency Standards T24 California Title 24 Residential and Non-Residential Compliant * ENERGY STAR

Item Number	Lamp Description	W	V	Finish	CRI	CCT	Lm	Bm	M.O.L. (Inches)	Life/ Hrs.	UPC	Pack/ Mstr.
S29336*†	18.5W/LED/9FLUSH/27K/RD/WH	18.5	120	White	90	2700K	1150	108°	1"	50K	045923293368	12/1
S29337*†	18.5W/LED/9FLUSH/27K/RD/BN	18.5	120	Br. Nickel	90	2700K	1150	108°	1"	50K	045923293375	12/1
S29338*†	18.5W/LED/9FLUSH/27K/RD/BRZ	18.5	120	Bronze	90	2700K	1150	108°	1"	50K	045923293382	12/1
S29339*†	18.5W/LED/9FLUSH/30K/RD/WH	18.5	120	White	90	3000K	1200	108°	1"	50K	045923293399	12/1
S29379*†	18.5W/LED/9FLUSH/30K/RD/BN	18.5	120	Br. Nickel	90	3000K	1200	108°	1"	50K	045923293795	12/1
S21512†	18.5W/LED/9"FLUSH/30K/RD/BRZ	18.5	120	Bronze	90	3000K	1200	108°	1"	50K	045923205125	12/1
S29690†	18.5W/LED/9FLUSH/40K/RD/WH	18.5	120	White	90	4000K	1200	108°	1"	50K	045923296901	12/1
S29362*	18.5W/LED/9FLUSH/50K/RD/WH	18.5	120	White	80	5000K	1300	108°	1"	50K	045923293627	12/1
0-10V, 90 CRI												
S21513†	18.5W/LED/9"/30K/RD/WH/0-10VD	18.5	120	White	h90	3000K	1200	108°	1"	50K	045923205132	12/1
S21514†	18.5W/LED/9"/40K/RD/WH/0-10VD	18.5	120	White	90	4000K	1300	108°	1"	50K	045923205149	12/1
277V												
S29358†	18.5W/LED/9"FLUSH/30K/RD/WH/277V	18.5	277	White	90	3000L	1200	108°	1"	50K	045923293580	12/1

** Consult Satco or visit www.satco.com for an up to date dimmer compatibility list. *** See separate warranty for complete terms and conditions.

9" Square Blink™ LED fixtures

Applications

- Kitchens
- Bathrooms
- Hallways
- Family rooms
- Offices

Features

- Dimmable**
- Wet location
- Available in White, Brushed Nickel, and Bronze
- Mounts directly to 3" and 4" junction boxes
- ENERGY STAR certified*
- 5 Year limited warranty***

White

Brushed Nickel

Bronze

Installation is easy using the universal mounting plate.

9" LED Square Fixtures

Item Number	Lamp Description	W	V	Finish	CRI	CCT	Lm	Bm	M.O.L. (Inches)	Life/ Hrs.	UPC	Pack/ Mstr.
S29340*†	18.5W/LED/9FLUSH/27K/SQ/WH	18.5	120	White	90	2700K	1100	108°	1"	50K	045923293405	12/1
S29341*†	18.5W/LED/9FLUSH/27K/SQ/BN	18.5	120	Br. Nickel	90	2700K	1100	108°	1"	50K	045923293412	12/1
S29342*†	18.5W/LED/9FLUSH/27K/SQ/BRZ	18.5	120	Bronze	90	2700K	1100	108°	1"	50K	045923293429	12/1
S29343*†	18.5W/LED/9FLUSH/30K/SQ/WH	18.5	120	White	90	3000K	1150	108°	1"	50K	045923293436	12/1
S21515†	18.5W/LED/9"FLUSH/30K/SQ/BN	18.5	120	Br. Nickel	90	3000K	1150	108°	1"	50K	045923215155	12/1
S21516†	18.5W/LED/9"FLUSH/30K/SQ/BRZ	18.5	120	Bronze	90	3000K	1150	108°	1"	50K	045923215162	12/1
S21517†	18.5W/LED/9"FLUSH/40K/SQ/WH	18.5	120	White	90	4000K	1200	108°	1"	50K	045923215179	12/1
S29363*	18.5W/LED/9FLUSH/50K/SQ/WH	18.5	120	White	80	5000K	1350	108°	1"	50K	045923293634	12/1

** Consult Satco or visit www.satco.com for an up to date dimmer compatibility list. *** See separate warranty for complete terms and conditions.

13" Round Blink™ LED fixtures

White

Brushed Nickel

Bronze

Applications

- Kitchens
- Bathrooms
- Hallways
- Family rooms
- Offices

Features

- Dimmable**
- Damp location
- Available in White, Brushed Nickel, and Bronze
- Mounts directly to 3" and 4" junction boxes
- ENERGY STAR certified*
- 5 Year limited warranty***

Installation is easy using the twist & lock mounting bracket.

13" LED Round Fixtures

Item Number	Lamp Description	W	V	Finish	CRI	CCT	Lm	Bm	M.O.L. (Inches)	Life/ Hrs.	UPC	Pack/ Mstr.
S29650*†	25W/LED/13FLUSH/30K/RD/WH	24	120	White	90	3000K	1500	108°	1"	50K	045923296505	4/1
S29651*†	25W/LED/13FLUSH/30K/RD/BN	24	120	Br. Nickel	90	3000K	1500	108°	1"	50K	045923296512	4/1
S29652*†	25W/LED/13FLUSH/30K/RD/BRZ	24	120	Bronze	90	3000K	1500	108°	1"	50K	045923296529	4/1
S29691*†	25W/LED/13FLUSH/40K/RD/W	25	120	White	80	4000K	1800	108°	1"	40K	045923096914	4/1

** Consult Satco or visit www.satco.com for an up to date dimmer compatibility list. *** See separate warranty for complete terms and conditions.

5" x 18" and 7" x 18" Blink™ LED rectangular fixtures

S9368

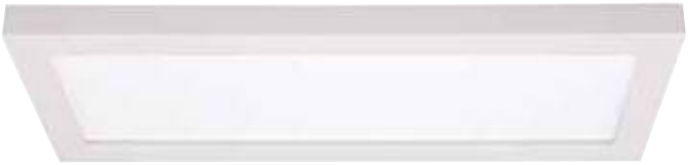

S9369

Applications

- Kitchens
- Bathrooms
- Hallways
- Meeting rooms
- Hospitality
- Health care
- Offices
- Retail

Features

- Dimmable, 120V only**
- Damp location
- ENERGY STAR certified*
- 5 Year limited warranty***

** DIMMABLE DAMP LOCATION * ENERGY STAR

5" x 18" LED Rectangular Fixtures

Item Number	Lamp Description	W	Bulb Type	Finish	V	CRI	CCT	Lm	Life/ Hrs.	UPC	Pack
S9368*	16W/LED/18"/FLUSH/30K/90CRI/REC	16	LED	White	120	90	3000K	950	40K	045923093685	6/1

7" x 18" LED Rectangular Fixture

S9369*	24W/LED/18"/FLUSH/30K/90CRI/REC	24	LED	White	120	90	3000K	1300	40K	045923093692	6/1

** Consult Satco or visit www.satco.com for an up to date dimmer compatibility list. *** See separate warranty for complete terms and conditions.

6" and 8" Blink™ LED “Eco” fixtures

Applications

- Kitchens
- Bathrooms
- Hallways
- Family rooms
- Offices

Features

- Lightweight polycarbonate housing
- Dimmable**
- Damp location
- Available in White, 3000K
- 6" and 8" options
- Mounts directly to 3" and 4" junction boxes
- 90 CRI
- ENERGY STAR certified*
- 5 Year limited warranty***

White Finish
S9880 6" shown

Blink "Eco" LED Fixtures

Item Number	Lamp Description	W	V	Finish	CRI	CCT	Lm	M.O.L. (Inches)	Life/ Hrs.	UPC	Pack/ Mstr.
S9880*	12.5W/LED/6"FLUSH/3K/ECO	12.5	120	White	90	3000K	690	1"	50K	045923098802	12/1
S9881*	16.5W/LED/8"FLUSH/3K/ECO	16.5	120	White	90	3000K	940	1"	50K	045923098819	12/1

** Consult Satco or visit www.satco.com for an up to date dimmer compatibility list. *** See separate warranty for complete terms and conditions.

7" and 9" Blink™ LED "Slim" fixtures

New ultra-thin 5/8" edge lit flush mount fixture

Applications

- Kitchens
- Bathrooms
- Hallways
- Family rooms
- Offices

Features

- Dimmable**
- Damp location
- Available in White, Brushed Nickel, Polished Nickel and Bronze
- Mounts directly to 3" and 4" junction boxes
- 90 CRI
- ENERGY STAR certified*
- 5 Year limited warranty***

Accessories, see page 38.

Brushed Nickel Finish
S9883 7" shown

Bronze Finish
S9889 9" shown

Blink Slim LED Fixtures

** DIMMABLE DAMP LOCATION * ENERGY STAR

Item Number	Lamp Description	W	V	Finish	CRI	CCT	Lm	M.O.L. (Inches)	Life/ Hrs.	UPC	Pack/ Mstr.
Blink Slim 7"											
S9882*	12W/LED/7"FLUSH/3K/WH/SL	12	120-277	White	90	3000K	960	½"	50K	045923098826	12/1
S9883*	12W/LED/7"FLUSH/3K/BN/SL	12	120-277	Br. Nickel	90	3000K	960	½"	50K	045923098833	12/1
S9884*	12W/LED/7"FLUSH/3K/PN/SL	12	120-277	Pol. Nickel	90	3000K	960	½"	50K	045923098840	12/1
S9885*	12W/LED/7"FLUSH/3K/BRZ/SL	12	120-277	Bronze	90	3000K	960	½"	50K	045923098857	12/1
Blink Slim 9"											
S9886*	16W/LED/9"FLUSH/3K/WH/SL	16	120-277	White	90	3000K	1300	½"	50K	045923098864	12/1
S9887*	16W/LED/9"FLUSH/3K/BN/SL	16	120-277	Br. Nickel	90	3000K	1300	½"	50K	045923098871	12/1
S9888*	16W/LED/9"FLUSH/3K/PN/SL	16	120-277	Pol. Nickel	90	3000K	1300	½"	50K	045923098888	12/1
S9889*	16W/LED/9"FLUSH/3K/BRZ/SL	16	120-277	Bronze	90	3000K	1300	½"	50K	045923098895	12/1

** Consult Satco or visit www.satco.com for an up to date dimmer compatibility list. *** See separate warranty for complete terms and conditions.

Blink™ accessory Slim 7", 9" pendant kits

Blink LED Slim fixtures sold separately

Applications / Features

- For use with Blink Slim 7" & 9" round LED fixtures
- White, Bronze, Brushed Nickel or Polished Nickel finishes
- Fixtures not included
- Kit includes pendant, ceiling canopy, 12' cord and all necessary mounting hardware.

7" White

9" Brushed Nickel

7" Bronze

9" Polished Nickel

Blink Accessory Slim 7", 9" Pendant Kits

Item Number	Description	Finish	Use With	Cord Length	UPC	Pack
62-1301	BLINK SLIM 7" PENDANT KIT	White	S9882	12'	045923513015	12/1
62-1302	BLINK SLIM 9" PENDANT KIT	White	S9886	12'	045923513022	12/1
62-1303	BLINK SLIM 7" PENDANT KIT	Bronze	S9885	12'	045923513039	12/1
62-1304	BLINK SLIM 9" PENDANT KIT	Bronze	S9889	12'	045923513046	12/1
62-1305	BLINK SLIM 7" PENDANT KIT	Brushed Nickel	S9883	12'	045923513053	12/1
62-1306	BLINK SLIM 9" PENDANT KIT	Brushed Nickel	S9887	12'	045923513060	12/1
62-1307	BLINK SLIM 7" PENDANT KIT	Polished Nickel	S9884	12'	045923513077	12/1
62-1308	BLINK SLIM 9" PENDANT KIT	Polished Nickel	S9888	12'	045923513084	12/1

Blink LED Slim 7", 9" Fixtures

** DIMMABLE DAMP LOCATION * ENERGY STAR

Item Number	Lamp Description	W	V	Finish	CRI	CCT	Lm	M.O.L. (Inches)	Life/ Hrs.	UPC	Pack
Blink Slim 7"											
S9882*	12W/LED/7"FLUSH/3K/WH/SL	12	120-277	White	90	3000K	960	1/2	50K	045923098826	12/1
S9883*	12W/LED/7"FLUSH/3K/BN/SL	12	120-277	Br. Nickel	90	3000K	960	1/2	50K	045923098833	12/1
S9884*	12W/LED/7"FLUSH/3K/PN/SL	12	120-277	Pol. Nickel	90	3000K	960	1/2	50K	045923098840	12/1
S9885*	12W/LED/7"FLUSH/3K/BRZ/SL	12	120-277	Bronze	90	3000K	960	1/2	50K	045923098857	12/1
Blink Slim 9"											
S9886*	16W/LED/9"FLUSH/3K/WH/SL	16	120-277	White	90	3000K	1300	1/2	50K	045923098864	12/1
S9887*	16W/LED/9"FLUSH/3K/BN/SL	16	120-277	Br. Nickel	90	3000K	1300	1/2	50K	045923098871	12/1
S9888*	16W/LED/9"FLUSH/3K/PN/SL	16	120-277	Pol. Nickel	90	3000K	1300	1/2	50K	045923098888	12/1
S9889*	16W/LED/9"FLUSH/3K/BRZ/SL	16	120-277	Bronze	90	3000K	1300	1/2	50K	045923098895	12/1

** Consult Satco or visit www.satco.com for an up to date dimmer compatibility list. *** See separate warranty for complete terms and conditions.

Blink™ 7" battery backup modules

Features

- 24 hour recharge time
- 90 minute operation from battery
- Switching time: < 1 second
- Over-charge / discharge protection
- Self-checking function
- Test button

Replacement battery -
26F18650
2600 mAh, 5.2A

S9344, S9346

Battery backup module

S9345, S9347

7" LED Round Battery Backup

Item Number	Description	UPC	Pack/ Mstr.
S29344	7" Round Battery Back Up - White	045923293443	12/1
S29346	7" Round Battery Back Up - Empty Casing* - White	045923293467	12/1
S29653	7" Round Battery Backup - Brushed Nickel	045923296536	12/1
S29654	7" Round Battery Backup - Empty Casing* - Brushed Nickel	045923296543	12/1
7" LED Square Battery Backup			
S29345	7" Square Battery Backup - White	045923293450	12/1
S29347	7" Square Battery Backup - Empty Casing* - White	045923293474	12/1

Battery backup module and Blink fixture sold separately.
* Used to maintain consistent appearance with Blinks utilizing the battery back up.

** Consult Satco or visit www.satco.com for an up to date dimmer compatibility list. *** See separate warranty for complete terms and conditions.

Blink™ 9" battery backup modules

S9656, S9657

S9658, S9659

Features

- 24 hour recharge time
- 90 minute operation from battery
- Switching time: < 1 second
- Over-charge / discharge protection
- Self-checking function
- Test button

Replacement battery -
26F18650
2600 mAh, 5.2A

9" LED Round Battery Backup

Item Number	Description	UPC	Pack/ Mstr.
S29656	9" Round Battery Backup - White	045923096563	12/1
S29657	9" Round Battery Backup - Empty Casing* - White	045923096570	12/1
9" LED Square Battery Backup			
S29658	9" Square Battery Backup - White	045923096587	12/1
S29659	9" Square Battery Backup - Empty Casing* - White	045923096594	12/1

Battery backup module and Blink fixture sold separately. *Used to maintain consistent appearance with Blinks utilizing the battery backup.

** Consult Satco or visit www.satco.com for an up to date dimmer compatibility list. *** See separate warranty for complete terms and conditions.

LED indoor utility fixtures that get the job done.

Even the most mundane spaces in the home or commercial space need to be safely lit. But this doesn't mean that efficiency and decor should suffer. Nuvo utility and basic LED ceiling and wall fixtures are perfect for baths, hallways, stairwells, work and laundry rooms, offices, closets—even kitchens and baths—can now be safely and efficiently lit with these stylish, yet simple, fixtures. And for added safety and security, our emergency battery backup ready line delivers Efficient LED light when it’s needed most.

And look good doing it.

LED ceiling wraps with or without pull chain

Even, consistent light. Low maintenance. High efficiency.

Applications

- Kitchens
- Work areas
- Hallways
- Laundry
- Closets†

Features

- 2' and 4' Lengths
- Mounts directly to junction box or can be internally wired using built-in junction box
- Maintenance free—no bulb to change
- Perfect, even light distribution
- 90 CRI
- Slim design
- 50,000 hour life
- Universal input voltage, 100-277V
- 3000K & 4000K options
- Certified for damp locations
- ENERGY STAR certified
- 5 Year warranty

65-1091, 65-1092

LED Ceiling Wraps

50,000 HOURS | 90 CRI | DAMP LOCATION | ETL | † nec | ENERGY STAR

Item Number	Lamp Description	W	V	CRI	CCT	Lm	Efficiency (LM/W)	Life/ Hrs.	UPC	Pack
65-1081	2FT LED Ceiling Wrap Fixture	20	100-277	90	4000K	1600	80	50K	045923510816	4
65-1082	4FT LED Ceiling Wrap Fixture	40	100-277	90	4000K	3200	80	50K	045923510823	4
65-1083	2FT LED Ceiling Wrap Fixture	20	100-277	90	3000K	1600	80	50K	045923510830	4
65-1084	4FT LED Ceiling Wrap Fixture	40	100-277	90	3000K	3200	80	50K	045923510847	4
LED Ceiling Wraps with On/Off Pull Chain										
65-1091	2FT LED Ceiling Wrap Fixture with on/off pull chain	20	120	90	3000K	1600	80	50K	045923670916	1
65-1092	4FTLED Ceiling Wrap Fixture with on/off pull chain	40	120	90	3000K	3200	80	50K	045923670923	1

LED strip fixtures

Even, consistent light.
Low maintenance.
High efficiency.

Applications

- Bathrooms
- Closets†
- Kitchen
- Work areas
- Hallways
- Retail

Features

- 4' Stand-alone model
- 1', 2', and 4' Connectable models (Includes male/male butt connector)
- Ceiling or wall mount
- Maintenance free—no bulb to change
- Consistent, even light distribution
- 90 CRI
- Ultra-slim design
- Damp location
- 4000K
- Long Life—50,000 hours
- ENERGY STAR certified
- 5 Year warranty

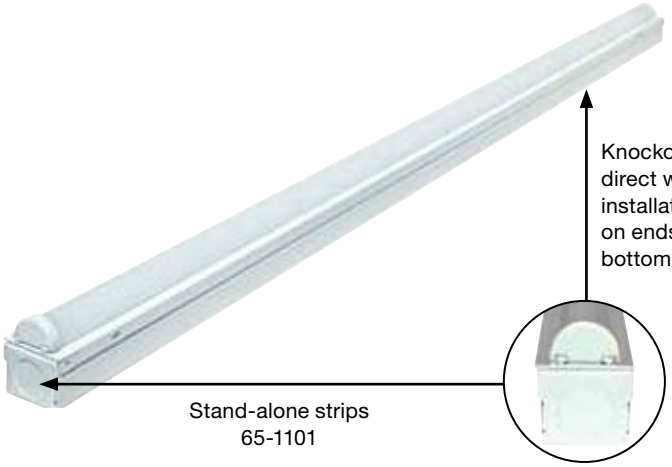

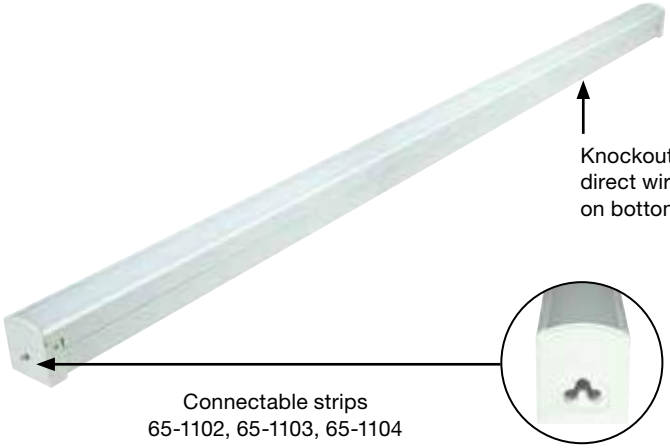

Accessories

5' Power cord
65-1107

8" Connector
65-1108

LED Strip Fixtures

Item Number	Size	W	Input Voltage	CCT	Lm	CRI (RA)	PF	Location	Installation	Linkable or Non	Life/ Hrs.	UPC	Pack
65-1101	4FT	24	100-277	4000K	1800	90	0.9	Damp	surface mounting on ceiling or wall	Non Linkable	50K	045923511011	12/1
65-1102	1FT	12	120V	4000K	840	90	0.9	Damp	surface mounting on ceiling or wall	Linkable	50K	045923511028	12/1
65-1103	2FT	24	120V	4000K	1680	90	0.9	Damp	surface mounting on ceiling or wall	Linkable	50K	045923511035	12/1
65-1104	4FT	36	120V	4000K	2600	90	0.9	Damp	surface mounting on ceiling or wall	Linkable	50K	045923511042	12/1

† Complies with NEC code 410.16

Glamour LED flush fixtures

Even, consistent light. Low maintenance. High efficiency.

Applications

- Kitchen
- Bathroom
- Hallway
- Office
- Utility

Features

- Dimmable
- 3000K
- Long Life—30,000 hours
- Durable white polymer cover
- Damp location
- 3 Year warranty

62-1035

62-1036

62-1037

62-1038

62-1041
(Oval)

Glamour LED Flush Fixtures

Item Number	Lamp Description	W	V	CRI	CCT	Lm	Life/ Hrs.	Dimensions	UPC	Pack
62-1035	LED GLAMOUR BN 10" FLUSH	18	120	90	3000K	1440	30K	10" W x 3 ¾" H	045923410352	6
62-1036	LED GLAMOUR BN 13" FLUSH	25	120	90	3000K	2000	30K	13" W x 3 ¾" H	045923410369	6
62-1037	LED GLAMOUR BN 17" FLUSH	25	120	90	3000K	2000	30K	17" W x 3 ¾" H	045923410376	4
62-1038	LED GLAMOUR BN 24" FLUSH	39	120	90	3000K	3120	30K	24" W x 3 ¾" H	045923410383	2
62-1041	LED GLAMOUR BN 32" OVAL	52	120	90	3000K	4160	30K	32 ½" L x 18" W x 4" H	045923410413	1

Glamour linear LED ceiling fixtures

Even, consistent light.
Low maintenance.
High efficiency.

62-1039

62-1040

Applications

- Kitchen
- Bathroom
- Hallway
- Office
- Utility

Features

- Dimmable
- 3000K
- Long Life—30,000 hours
- Durable white polymer lens
- Damp location
- 3 Year warranty

Glamour Linear LED Ceiling Fixtures

Item Number	Lamp Description	W	V	CRI	CCT	Lm	Life/ Hrs.	Dimensions	UPC	Pack
62-1039	LED GLAMOUR BN 25" LINEAR	26	120	90	3000K	2080	30K	25" L x 12" W x 4 ½" H	045923410390	3
62-1040	LED GLAMOUR BN 50" LINEAR	52	120	90	3000K	4160	30K	50" L x 12" W x 4 ½" H	045923410406	1

Glamour & Crispo LED wall sconces

Even, consistent light.
Low maintenance.
High efficiency.

Applications

- Kitchen
- Bathroom
- Hallway
- Office

Features

- Dimmable
- 10 Watts - 75 Watt equivalent
- 3000K
- Long Life—30,000 hours
- Durable white polymer cover
- Damp location
- ADA Compliant
- 3 Year warranty

Glamour

Brushed Nickel Finish
62-1045 shown

Crispo

White Finish
62-1046 shown

Glamour & Crispo LED Wall Sconces

Item Number	Lamp Description	W	V	CRI	CCT	Lm	Life/ Hrs.	Dimensions	UPC	Pack
62-1045	LED GLAMOUR BN WALL SCONCE	10	120	90	3000K	800	30K	9" W x 10 ½" H x 4" Ext.	045923410451	1
62-1046	LED CRISPO WHITE WALL SCONCE	10	120	90	3000K	800	30K	9" W x 10 ½" H x 4" Ext.	045923410468	1

Glamour & Crispo LED vanity fixtures

Even, consistent light.
Low maintenance.
High efficiency.

Applications

- Kitchen
- Bathroom
- Hallway
- Office

Features

- Dimmable
- 3000K
- Long Life—30,000 hours
- Durable white polymer lens
- Damp location
- ADA compliant
- 3 Year warranty

Glamour

Brushed Nickel Finish
62-1031 shown

Brushed Nickel Finish
62-1032 shown

Crispo

White Finish
62-1033 shown

White Finish
62-1034 shown

Glamour & Crispo LED Vanity Fixtures

Item Number	Lamp Description	W	V	CRI	CCT	Lm	Life/ Hrs.	Dimensions	UPC	Pack
62-1031	LED GLAMOUR 25" BN VANITY	26	120	90	3000K	2080	30K	25" W x 5 ½" H x 3" Ext.	045923410314	6
62-1032	LED GLAMOUR 49" BN VANITY	52	120	90	3000K	4160	30K	49" W x 5 ½" H x 3" Ext.	045923410321	4
62-1033	LED CRISPO 25" WHITE VANITY	26	120	90	3000K	2080	30K	25" W x 5 ½" H x 3" Ext.	045923410338	6
62-1034	LED CRISPO 49" WHITE VANITY	52	120	90	3000K	4160	30K	49" W x 5 ½" H x 3" Ext.	045923410345	4

62-2936
Double Tube Wall Sconce
Approved for Vertical or
Horizontal Mounting

62-2938
Dual Tube Wall Sconce

62-2934
Single Tube Wall Sconce

Link LED fixtures

Even, consistent light. Low maintenance. High efficiency.

Applications

- Kitchen
- Bathroom
- Hallway
- Office

Features

- Dimmable
- 3000K
- Long Life—30,000 hours
- Damp location
- Wall sconces ADA compliant
- 3 Year warranty

25-4091 Optional mounting plate

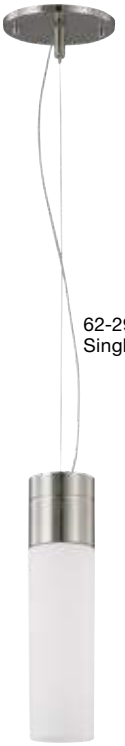

62-2932
Single Tube Pendant

(3) 62-2932 Pendants with
Optional 25-4091 Mounting Plate.

Link LED Fixtures

Item Number	Lamp Description	Finish	W	Bulb Type	CRI	Lm	Dimensions	UPC	Pack
62-2938	Dual Tube Wall Sconce	Br. Nickel/Satin White Glass	24	LED Mod.	90	1640	8"W x 11½"H x 3¾" Ext.	045923679384	1/8
62-2936	Double Tube Wall Sconce	Br. Nickel/Satin White Glass	24	LED Mod.	90	1640	4½"W x 21"H x 3 ¾" Ext.	045923679360	1/8
62-2934	Single Tube Wall Sconce	Br. Nickel/Satin White Glass	12	LED Mod.	90	820	4½"W x 11½"H x 3 ¾" Ext.	045923679346	1/2
62-2932	Single Tube Pendant	Br. Nickel/Satin White Glass	12	LED Mod.	90	820	2¾"H"W x 10¾"H, Wire 12'	045923679322	1/8
25-4091	3-Light Canopy Mounting Plate	Br. Nickel					36"W x 5½"H	045923240911	1

Button round LED flush fixtures

Even, consistent light.
Low maintenance.
High efficiency.

Applications

- Kitchen
- Bathroom
- Hallway
- Office

Features

- Dimmable
- 3000K
- Long Life—30,000 hours
- Satin White glass
- Damp location
- 3 Year warranty

62-1042

62-1043

62-1044

Button Round LED Flush Fixtures

Item Number	Lamp Description	W	V	CRI	CCT	Lm	Life/ Hrs.	Dimensions	UPC	Pack
62-1042	LED BUTTON BN 11" FLUSH	18	120	90	3000K	1440	30K	11" W x 3 ⅞" H	045923410420	4
62-1043	LED BUTTON BN 13" FLUSH	18	120	90	3000K	1440	30K	13 ⅜" W x 4" H	045923410437	3
62-1044	LED BUTTON BN 17" FLUSH	25	120	90	3000K	2000	30K	17" W x 5" H	045923410444	3

12" and 14" Range voltage operation (120-277V) LED flush fixtures

90CRI, 3000K

Brushed Nickel Finish Shown
62-786 12" / 62-788 14"

Mahogany Bronze Finish Shown
62-787 12" / 62-789 14"

Applications

- Kitchens
- Baths
- Hallways
- Closets†
- Office

Features

- 75W and 100W equivalent
- 18W and 24W - over 75% energy savings
- 120-277V
- 90 CRI
- Dimmable (120V only)*
- Damp location
- Frosted Twist & Lock Glass
- Long Life—50,000 hours
- 5 Year warranty

LED module

LED Flush Mount Fixtures

Item Number	Description	W	V	CRI	CCT	Lm	Beam	Dimension	Life/ Hrs.	UPC	Pack
62-786*	12" LED Flush Mount / Brushed Nickel	18	120-277	90	3000K	1080	90°	11 ¾" W x 4 ½" H	50K	045923327865	4/1
62-787*	12" LED Flush Mount / Mahogany Bronze	18	120-277	90	3000K	1080	90°	11 ¾" W x 4 ½" H	50K	045923327872	4/1
62-788*	14" LED Flush Mount / Brushed Nickel	24	120-277	90	3000K	1440	90°	14" W x 5 ½" H	50K	045923327889	4/1
62-789*	14" LED Flush Mount / Mahogany Bronze	24	120-277	90	3000K	1440	90°	14" W x 5 ½" H	50K	045923327896	4/1

† Complies with NEC code 410.16

7" and 10" LED disk light

62-1161 - 7"
White finish

Brushed Nickel Finish
62-1162 7" Shown

Mahogany Bronze Finish
62-1163 7" Shown

Applications

- Kitchen
- Bathroom
- Hallway
- Closets†
- Office

Features

- 10.5 Watts (62-1161, 62-1162, 62-1163, 62-1164) 60 Watt equivalent
- 12 Watts (62-1165, 62-1166, 62-1167, 62-1168) 75 Watt equivalent
- 90 CRI
- Dimmable
- 5 Year warranty
- Long life–50,000 hours
- Durable white polymer lens
- cETLus damp location

LED Module - 7"

LED Module - 10"

LED Disk Lights

Item Number	Description	W	V	CRI	CCT	Lm	Light Source	Finish	Life/ Hrs.	Dimensions	UPC	Pack
62-1161	7" LED disk light	10.5	120	90	3000K	578	LED Module	White	50K	7 1/16" W x 1 1/16" H	045923639715	12/1
62-1162	7" LED disk light	10.5	120	90	3000K	578	LED Module	Brushed Nickel	50K	7 1/16" W x 1 1/16" H	045923639722	12/1
62-1163	7" LED disk light	10.5	120	90	3000K	578	LED Module	Mahogany Bronze	50K	7 1/16" W x 1 1/16" H	045923639739	12/1
62-1164	7" LED disk light	10.5	120	90	4000K	578	LED Module	White	50K	7 1/16" W x 1 1/16" H	045923639746	12/1
62-1165	10" LED disk light	12	120	90	3000K	700	LED Module	White	50K	9 13/16" W x 1 7/16" H	045923639753	12/1
62-1166	10" LED disk light	12	120	90	3000K	700	LED Module	Brushed Nickel	50K	9 13/16" W x 1 7/16" H	045923639760	12/1
62-1167	10" LED disk light	12	120	90	3000K	700	LED Module	Mahogany Bronze	50K	9 13/16" W x 1 7/16" H	045923639777	12/1
62-1168	10" LED disk light	12	120	90	4000K	700	LED Module	White	50K	9 13/16" W x 1 7/16" H	045923639784	12/1

† Complies with NEC code 410.16

7" and 10" High lumen LED disk light

White Finish
62-1261 7" Shown

Brushed Nickel Finish
62-1262 7" Shown

Mahogany Bronze Finish
62-1267 10" Shown

Applications

- Kitchen
- Bathroom
- Hallway
- Closets†
- Office

Features

- 16.5 Watts = 75 Watt equivalent
- 21.5 Watts = 100 Watt equivalent
- 90 CRI
- Dimmable
- Long life—50,000 hours
- Durable white polymer lens
- cETLus damp location
- 5 Year warranty

LED Module - 7"

LED Module - 10"

LED Disk Lights

Item Number	Description	W	V	Light Source	CCT	Lm	CRI	Finish	Life/ Hrs.	UPC	Pack/ Mstr.
62-1261**	7" LED disk light	16.5	120	LED Module	3000K	1000	>90	White	50K	045923622144	12
62-1262**	7" LED disk light	16.5	120	LED Module	3000K	1000	>90	Brushed Nickel	50K	045923622151	12
62-1263**	7" LED disk light	16.5	120	LED Module	3000K	1000	>90	Mahogany Bronze	50K	045923622168	12
62-1264**	7" LED disk light	16.5	120	LED Module	4000K	1050	>90	White	50K	045923622175	12
62-1265	10" LED disk light	21.5	120	LED Module	3000K	1200	>90	White	50K	045923622182	12
62-1266	10" LED disk light	21.5	120	LED Module	3000K	1200	>90	Brushed Nickel	50K	045923622199	12
62-1267	10" LED disk light	21.5	120	LED Module	3000K	1200	>90	Mahogany Bronze	50K	045923622205	12
62-1268	10" LED disk light	21.5	120	LED Module	4000K	1260	>90	White	50K	045923622212	12

11", 14" and 19" LED flush mount round fixtures with or without occupancy sensor

Applications

- Kitchen
- Bathroom
- Hallway
- Closets†
- Office

Features

- Dimmable (without sensor only)
- 11" – 75 Watt equivalent
- 14" – 100 Watt equivalent
- 19” – 150 Watt equivalent
- CCT: 3000K
- 90 CRI
- 5 Year warranty
- Long life – 50,000 hours
- Durable white cover (PMMA)
- cETLus damp location

LED module delivers even light distribution

LED module and internal occupancy sensor (Functions through the outer lens)

LED flush mount fixtures

Item Number	Description	W	V	Light Source	CCT	Lumens	CRI	Life/ Hours	Dimensions	UPC
62-745*	11" LED flush mount	16	120	LED Module	3000K	990**	>90	50,000	11 x 11 x 3 1/2	045923517457
62-746*	14" LED flush mount	20	120	LED Module	3000K	1230**	>90	50,000	14 x 14 x 3 1/2	045923517464
62-765*	19" LED flush mount	32	120	LED Module	3000K	1950**	>90	50,000	19 x 19 x 4 3/4	045923517655
62-747*	11" LED flush mount with occupancy sensor	16.5	120	LED Module	3000K	990**	>90	50,000	11 x 11 x 3 1/2	045923517471
62-748*	14" LED flush mount with occupancy sensor	20.5	120	LED Module	3000K	1230**	>90	50,000	14 x 14 x 3 1/2	045923517488
62-766*	19" LED flush mount with occupancy sensor	32.5	120	LED Module	3000K	1950**	>90	50,000	19 x 19 x 4 3/4	045923517662

**Lumens measured at LED source † Complies with NEC Code 410.16

11" and 14" LED flush mount square fixtures with or without occupancy sensor

Applications

- Kitchen
- Bathroom
- Hallway
- Closets†
- Office

Features

- Dimmable (without sensor only)
- 11" – 75 Watt equivalent
- 14" – 100 Watt equivalent
- CCT: 3000K
- 90 CRI
- 5 Year warranty
- Long life – 50,000 hours
- Durable white cover (PMMA)
- cETLus damp location

62-1095, 62-1097
11" LED flush mount fixture

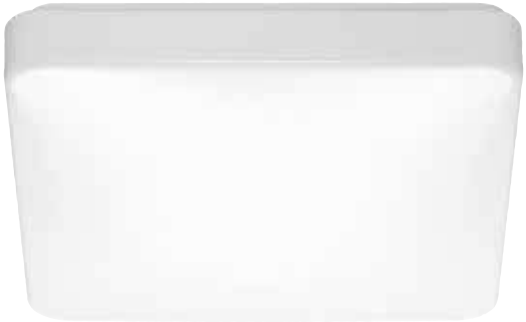

62-1096, 62-1098
14" LED flush mount fixture

LED module delivers
even light distribution

LED module and
internal occupancy sensor
(Functions through the outer lens)
Model 62-1097, 62-1098

LED flush mount fixtures

Item Number	Descriptions	W	V	Light Source	CCT	Lumens	CRI	Life/ Hours	Dimensions	UPC
62-1095*	11" LED flush mount	16	120	LED Module	3000K	990**	>90	50,000	11 x 11 x 3 1/4	045923510953
62-1096*	14" LED flush mount	20	120	LED Module	3000K	1230**	>90	50,000	14 x 14 x 3 1/4	045923510960
62-1097*	11" LED flush mount with occupancy sensor	16.5	120	LED Module	3000K	990**	>90	50,000	11 x 11 x 3 1/4	045923510977
62-1098*	14" LED flush mount with occupancy sensor	20.5	120	LED Module	3000K	1230**	>90	50,000	14 x 14 x 3 1/4	045923510984

**Lumens measured at LED source †Complies with NEC Code 410.16

11" and 14" Range voltage operation (120-277V) LED flush fixtures

90CRI, 3000K

Applications
- Kitchens
- Baths
- Hallways
- Closets†
- Office

11" 62-795
Features
- 11" Flush mount fixture
- 12.5 Watts—over 80% energy savings
- Dimmable (120V only)*
- Damp location
- Durable white cover (PMMA)

14" 62-796
Features
- 14" Flush mount fixture
- 16.5 Watts—over 80% energy savings
- Dimmable (120V only)*
- Damp location
- Durable white cover (PMMA)

62-795
11" LED flush mount fixture

62-796
14" LED flush mount fixture

LED Flush Mount Fixtures

Item Number	Lamp Description	W	V	CRI	CCT	Lm	Bm	Dimensions	Life/ Hrs.	UPC	Pack
62-795	11" LED Flush Mount	12.5	120-277	90	3000K	720	90°	11 ⅝" W x 3 ⅛" H	40K	045923327957	6/1
62-796	14" LED Flush Mount	16.5	120-277	90	3000K	960	90°	14" W x 3 ½" H	40K	045923327964	4/1

†Complies with NEC Code 410.16

14" Range voltage operation (120-277V) LED flush fixtures with sensors

90CRI, 3000K

Applications

- Kitchens
- Baths
- Hallways
- Closets†
- Office

14" Occupancy sensor 62-797 Features

- Occupancy Sensor–provides automatic ON/OFF switching
- 14" Flush mount fixture
- 16.5 Watts—over 80% energy savings
- Damp location
- Durable polymer cover

14" Vacancy sensor 62-798 Features

- 24/7 Sensor step-down operation: Unoccupied, 50% light / occupied, 100% light (Always on)
- 14" Flush mount fixture
- 16.5 Watts—over 80% energy savings
- Damp location
- Durable white cover (PMMA)

LED Flush Mount Fixtures

DAMP LOCATION † nec ENERGY STAR

Item Number	Lamp Description	W	V	CRI	CCT	Lm	Bm	Dimensions	Life/ Hrs.	UPC	Pack
62-797	14" LED Flush Mount w/ occupancy sensor	16.5	120-277	90	3000K	960	90°	14" W x 3 ½" H	40K	045923327971	4/1
62-798	14" LED Flush Mount w/ step down sensor	16.5	120-277	90	3000K	960	90°	14" W x 3 ½" H	40K	045923327988	4/1

† Complies with NEC code 410.16

LED flush mount emergency battery back-up ready (EMR)

EMR fixtures by Nuvo Lighting: Efficiency, safety and style all in one package.

This all-new collection of flush mount fixture combines the latest in LED technologies, current safety standards and adds clean, contemporary design to create one of the most advanced fixtures in the industry. Each fixture is manufactured to easily accept an emergency battery back-up disk (sold separately), which quickly transforms these attractive flush fixtures into functional emergency lighting devices. These fixtures allow safety specifications to be met without sacrificing design or efficiency.

62-977

62-981

62-978

62-982

62-975

62-971

62-976

62-972

Features

- 100 Watt equivalent
- 20 Watts—over 80% energy savings
- 120-277V
- 90 CRI
- Dimmable—120V only
- Dimming range 20%-100%
- Damp locations*
- Operating temperature -17°C to 45°C
- 5 Year warranty

LED Flush Mount Utility Fixtures

20 WATTS | REPLACES 100W | DIMMABLE | 3000 K | EMR EMERGENCY READY | 90 CRI | DAMP LOCATION

Item Number	Description	W	Finish	Light Source	CCT	Lm	CRI	Life/ Hrs.	Dimensions	UPC	Pack
62-971	20W/LED/3000K/90CRI/120-277V	20	Brushed Nickel	LED Module	3000K	1660	90	40K	15" W x 4" H	045923329715	2/1
62-972	20W/LED/3000K/90CRI/120-277V	20	Aged Bronze	LED Module	3000K	1660	90	40K	15" W x 4" H	045923329722	2/1
62-975	20W/LED/3000K/90CRI/120-277V	20	Polished Nickel	LED Module	3000K	1660	90	40K	14" W x 4 ⅝" H	045923329753	2/1
62-976	20W/LED/3000K/90CRI/120-277V	20	Aged Bronze	LED Module	3000K	1660	90	40K	14" W x 4 ⅝" H	045923329760	2/1
62-977	20W/LED/3000K/90CRI/120-277V	20	Brushed Nickel	LED Module	3000K	1660	90	40K	14" W x 5 ⅜" H	045923329777	2/1
62-978	20W/LED/3000K/90CRI/120-277V	20	Aged Bronze	LED Module	3000K	1660	90	40K	14" W x 5 ⅜" H	045923329784	2/1
62-981	20W/LED/3000K/90CRI/120-277V	20	Polished Nickel	LED Module	3000K	1660	90	40K	15" W x 4 ½" H	045923329814	2/1
62-982	20W/LED/3000K/90CRI/120-277V	20	Aged Bronze	LED Module	3000K	1660	90	40K	15" W x 4 ½" H	045923329821	2/1

*Not suitable for damp location if used with optional battery backup disk.

The emergency battery back-up disk, Satco model S9299 (120V) or Satco model S9780 (277V) (not included), easily mounts inside the pan of these fixtures instantly making them emergency lighting compliant. Battery back-up disk includes both the test button and indicator light. Batteries are easily accessible and included.

- Rechargeable batteries
- 90 minute run time

Remove the logo plate to mount the battery back-up indicator light and test button (included with battery back-up disk, sold separately).

Battery back-up disk (sold separately)

S9299 - 120V Battery back-up disk
S9780 - 277V Battery back-up disk

Replacement battery -
26F18650
2600 mAh, 5.2A

14" LED flush mount

Emergency battery back-up ready (EMR)

Applications

- Kitchens
- Bedrooms
- Baths
- Hallways
- Stairwells
- Office

Features

- 100W equivalent
- 20 Watts—over 80% energy savings
- 120–277V
- High color rendition (CRI 90+)
- Dimmable – 120V
- Dimming range: 20% -100%
- Damp location**
- Operating temperature: -17°C to 45°C
- White finish with durable white cover (PMMA)
- 5 Year warranty

Dimensions

Width: 14", Height: 4 3/4"

Battery back-up ready (EMR).
Indicator light and test button
Included with battery back-up disk
(sold separately).

Integrated circular LED module for consistency and dependability.

Emergency battery back-up disk (not included)

The emergency battery back-up disk, Satco model S9299 (120V) or Satco model S9780 (277V) (not included), easily mounts inside the pan of this fixture (below).
S9299
S9780

Replacement battery -
26F18650
2600 mAh, 5.2A

LED Flush Mount Utility Fixtures

100W EQUIVALENT | DIMMABLE | EMR EMERGENCY READY | 90 CRI | DAMP LOCATION | * ENERGY STAR

Item Number	Description	W	V	Light Source	CCT	Lm	CRI	Life/ Hrs.	UPC	Pack
62-991*	20W/LED/14"UTILITY/30K/WH	20	120-277	LED Module	3000K	1300	90	50K	045923329913	4/1

**Not suitable for damp locations if used with optional battery back-up module.

Commercial and industrial, indoor/outdoor architectural LED lighting.

Building codes everywhere set minimum safety standards for the lighting of virtually every structure. The Nuvo architectural LED line will certainly meet those standards, but do it more efficiently. LED lighting can save up to 80% on utility costs verses older technologies while providing the lighting needed for commercial building exteriors, parking garages, walkways, entryways, warehouses—indoors or out. Nuvo architectural LED fixtures are keeping venues everywhere safe and efficiently lit using the best electrical components, materials and overall fixture engineering available, even in the harshest conditions.

24W LED dual head security light

With or without motion sensor

Applications

- Patio lighting
- Entrance lighting
- Driveways
- Yards
- Walkways

Features

- Bronze or white finish
- Dual die-cast head with clear plastic impact resistant lens
- Wall mounted recessed junction box required
- Meets all product safety standards
- Suitable for wet locations
- 3000K & 4000K options
- 75 CRI
- 50-70W MH Equivalent
- Operating temperature: –25°C to 40°C
- ENERGY STAR certified
- Long life—50,000 hours
- 5 Year warranty

Motion Sensor Specifications

- 1 Time setting: Min. 5 sec, Max. 9 min ± 1 min
- Detection angle: 180°
- Detection range: 12m (22~24)°C
- Light-control: 10LUX~2000LUX

65-094

65-107

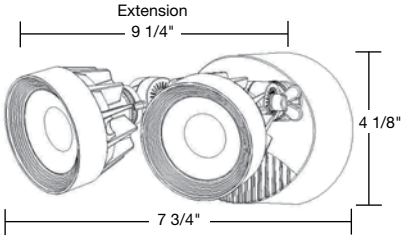

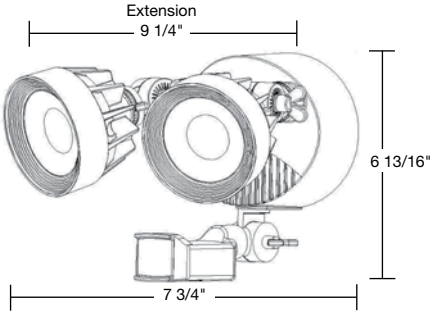

24W LED Dual Head Security Light

WET LOCATION | 75 CRI | 50,000 HOURS | ENERGY STAR | WET LOCATION | RoHS COMPLIANT

Item Number	Lamp Description	W	V	Finish	CRI	CCT	Lm	Bm	Life/ Hrs.	UPC	Pk./ Mstr.
65-107	Dual Head Security Light	24	120-277	White	75	4000K	2000	180°	50K	045923671074	4
65-108	Dual Head Security Light w/Motion Sensor	24	120	White	75	4000K	2000	180°	50K	045923671081	4
65-093	Dual Head Security Light	24	120-277	Bronze	75	4000K	2000	180°	50K	045923630934	4
65-094	Dual Head Security Light w/Motion Sensor	24	120	Bronze	75	4000K	2000	180°	50K	045923630941	4
65-207	Dual Head Security Light	24	120-277	White	75	3000K	1950	180°	50K	045923662072	4
65-208	Dual Head Security Light w/Motion Sensor	24	120	White	75	3000K	1950	180°	50K	045923662089	4
65-203	Dual Head Security Light	24	120-277	Bronze	75	3000K	1950	180°	50K	045923662034	4
65-204	Dual Head Security Light w/Motion Sensor	24	120	Bronze	75	3000K	1950	180°	50K	045923662041	4

14W LED single head security light

With or without motion sensor

Applications

- Patio lighting
- Entrance lighting
- Driveways
- Yards
- Walkways

Features

- Bronze or white finish
- Single die-cast head with clear plastic impact resistant lens
- Wall mounted recessed junction box required
- Meets all product safety standards
- Suitable for wet locations
- 3000K & 4000K
- 75 CRI
- 50-70W MH Equivalent
- Operating temperature: –25°C to 40°C
- ENERGY STAR certified
- Long life—50,000 hours
- 5 Year warranty

Motion Sensor Specifications

- 1 Time setting: Min. 5 sec, Max. 9 min ± 1 min
- Detection angle: 180°
- Detection range: 12m (22~24)°C
- Light-control: 10LUX~2000LUX

65-092

65-105

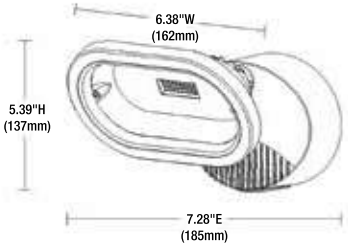

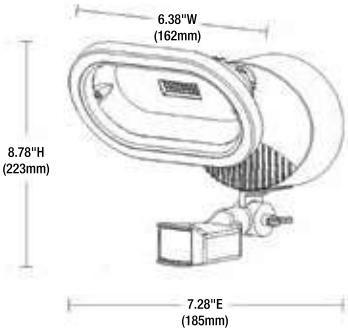

WET LOCATION 75 CRI 50,000 HOURS ENERGY STAR WET LOCATION RoHS COMPLIANT

14W LED Single Head Security Light

Item Number	Lamp Description	W	V	Finish	CRI	CCT	Lm	Bm	Life/ Hrs.	UPC	Pk./ Mstr.
65-105	Single Head Security Light	14	120-277	White	75	4000K	1200	180°	50K	045923671050	4
65-106	Single Head Security Light w/Motion Sensor	14	120	White	75	4000K	1200	180°	50K	045923671067	4
65-091	Single Head Security Light	14	120-277	Bronze	75	4000K	1200	180°	50K	045923630910	4
65-092	Single Head Security Light w/Motion Sensor	14	120	Bronze	75	4000K	1200	180°	50K	045923630927	4
65-205	Single Head Security Light	14	120-277	White	75	3000K	1150	180°	50K	045923662058	4
65-206	Single Head Security Light w/Motion Sensor	14	120	White	75	3000K	1150	180°	50K	045923662065	4
65-201	Single Head Security Light	14	120-277	Bronze	75	3000K	1150	180°	50K	045923662010	4
65-202	Single Head Security Light w/Motion Sensor	14	120	Bronze	75	3000K	1150	180°	50K	045923662027	4

LED small flood light

Applications
- Landscapes
- Walkways
- Entryways
- Accent lighting

Features
- 12W
- Bronze finish
- Rugged construction
- Die-cast aluminum body
- UV stabilized powder coated finish
- 120-277V
- -40˚C Starting temperature
- 3000K, 4000K, 5000K options
- 70W MH equivalent
- Suitable for wet locations
- 54,000 Hour life
- 1/2" Thread knuckle mount
- 5 Year warranty

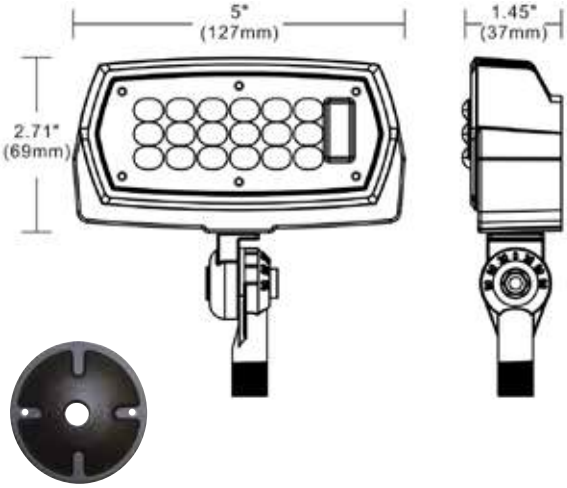

Wall mounting plate,
Dark Bronze, sold separately.
76-665 1 Light (shown)
76-666 2 Light (also available)

LED Small Flood Light

WET LOCATION | 80 CRI | 54,000 HOURS | DLC | c UL us LISTED | RoHS COMPLIANT

Item Number	Lamp Description	W	V	Finish	CCT	Lm	CRI	Life/ Hrs.	UPC	Pack/ Mstr.
65-121	12W SMALL FLOOD LIGHT	12	120-277	Bronze	5000K	1474	80	54K	045923671210	24
65-124	12W SMALL FLOOD LIGHT	12	120-277	Bronze	4000K	1463	80	54K	045923671241	24
65-127	12W SMALL FLOOD LIGHT	12	120-277	Bronze	3000K	1475	80	54K	045923671272	24

LED large flood light

Applications
- Landscapes
- Walkways
- Entryways
- Accent lighting

Features
- Bronze finish
- Rugged construction
- Die-cast aluminum body
- UV stabilized powder coated finish
- 120-277V
- -40˚C Starting temperature
- 3000K, 4000K, 5000K options
- 29W, 70–100W MH equivalent
- 48W, 150W MH equivalent
- Suitable for wet locations
- 54,000 Hour life
- 1/2" Thread knuckle mount
- 5 Year warranty

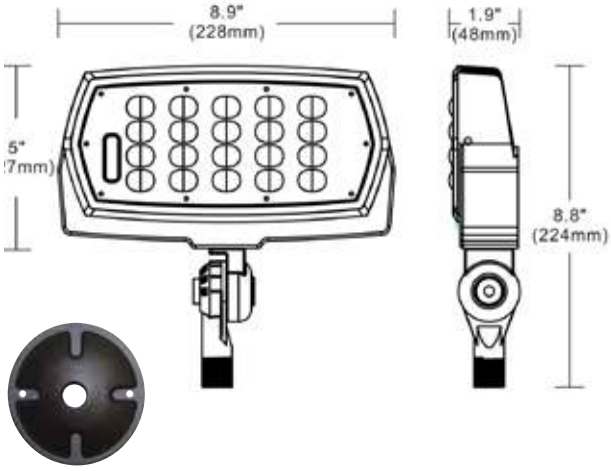

Wall mounting plate,
Dark Bronze, sold separately.
76-665 1 Light (shown)
76-666 2 Light (also available)

LED Large Flood Light

WET LOCATION | 80 CRI | 54,000 HOURS | DLC | c UL us LISTED | RoHS COMPLIANT

Item Number	Lamp Description	W	V	Finish	CCT	Lm	CRI	Life/ Hrs.	UPC	Pack/ Mstr.
65-122	29W LARGE FLOOD LIGHT	29	120-277	Bronze	5000K	3307	80	54K	045923671227	12
65-123	48W LARGE FLOOD LIGHT	48	120-277	Bronze	5000K	5562	80	54K	045923671234	12
65-125	29W LARGE FLOOD LIGHT	29	120-277	Bronze	4000K	3218	80	54K	045923671258	12
65-126	48W LARGE FLOOD LIGHT	48	120-277	Bronze	4000K	5562	80	54K	045923671265	12
65-128	29W LARGE FLOOD LIGHT	29	120-277	Bronze	3000K	3455	80	54K	045923671289	12
65-129	48W LARGE FLOOD LIGHT	48	120-277	Bronze	3000K	5675	80	54K	045923671296	12

11W LED wall mount door/corridor fixture with or without photo control

Bronze Finish / Polycarbonate Diffuser

65-050
65-051 with photocell

Features

- DLC and UL listed
- IP65 Rated enclosure
- Die-cast aluminum body
- UV stabilized powder coated finish
- Quick mount installation
- Suitable for wet locations
- High impact polycarbonate diffuser
- Photo control option – On at dusk / Off at dawn
- 5 Year warranty

Specifications

- 11W
- 828 Lumens*
- 120-277V (without photocell)
- 5000K
- 75 CRI
- 50-70W MH Equivalent
- Operating temperature: –40°C to 40°C
- Long life—50,000 hours

Dimensions

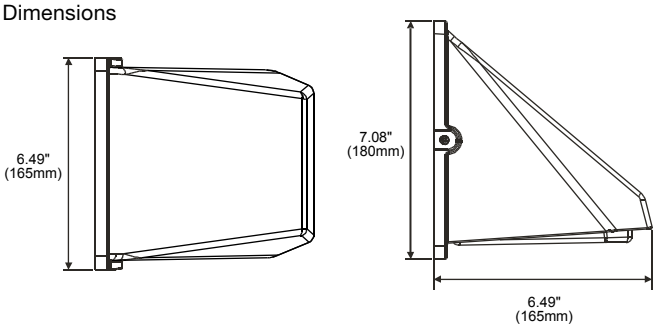

WET LOCATION

11W LED Wall Mount

Item Number	Description	W	V	CRI	CCT	Total Lms*	Lms/ Watt	Dimensions	Equivalent	UPC	Pack
65-050	LED WALL PACK 11W BRONZE/ POLYCARBONATE DIFFUSER	11.29	120-277	75	5000K	828	73	6 ½" W x 7 1/16" H x 6 ½" Ext.	50-70W MET. HAL.	045923630507	6/1
65-051	LED WALL PACK 11W - PHOTO CELL BRONZE/ POLYCARBONATE DIFFUSER	11.29	120	75	5000K	828	73	6 ½" W x 7 1/16" H x 6 ½" Ext.	50-70W MET. HAL.	045923630514	6/1

13W LED wall mount door/corridor fixture with or without photo control

Bronze Finish / Polycarbonate Diffuser

65-052
65-053 with photocell

Features

- UL listed
- IP65 Rated enclosure
- Die-cast aluminum body
- UV stabilized powder coated finish
- Quick mount installation
- Suitable for wet locations
- High impact polycarbonate diffuser
- Photo control option – On at dusk / Off at dawn
- 5 Year warranty

Specifications

- 14W
- 761 Lumens*
- 120-277V (without photocell)
- 5000K
- 75 CRI
- 50-70W MH Equivalent
- Operating temperature: –40°C to 40°C
- Long life—35,000 hours

Dimensions

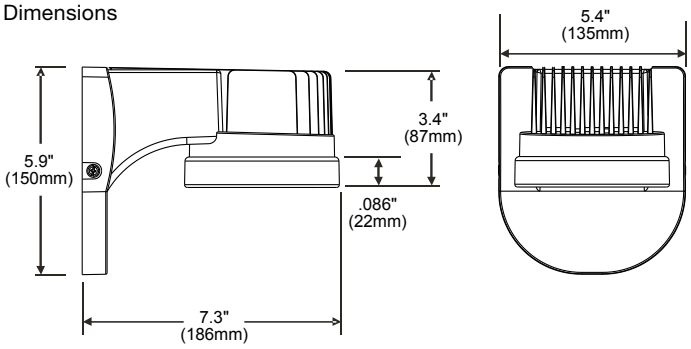

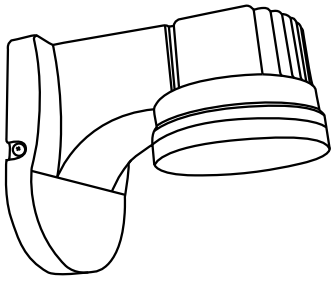

WET LOCATION

13W LED Wall Mount

Item Number	Description	W	V	CRI	CCT	Total Lms*	Lms/ Watt	Dimensions	Equivalent	UPC	Pack
65-052	LED WALL PACK 14W BRONZE/ POLYCARBONATE DIFFUSER	13.3	120-277	75	5000K	761	57	5 3/8" W x 5 7/8" H x 7 5/16" Ext.	50-70W MET. HAL.	045923630521	6/1
65-053	LED WALL PACK 14W - PHOTO CELL BRONZE/ POLYCARBONATE DIFFUSER	13.3	120	75	5000K	761	57	5 3/8" W x 5 7/8" H x 7 5/16" Ext.	50-70W MET. HAL.	045923630538	6/1

13W LED wall pack with photo control

Bronze Finish / Prismatic Lens

Features

- UL listed
- Die-cast aluminum body
- UV stabilized powder coated finish
- Prismatic lens for uniform light distribution
- Suitable for wet locations
- Photo control – On at dusk / Off at dawn
- 5 Year warranty

Specifications

- 13W
- 908 Lumens*
- 120V
- 5000K
- 70 CRI
- 50-70W MH Equivalent
- Operating temperature: –40°C to 40°C
- Long life—42,000 hours

Dimensions

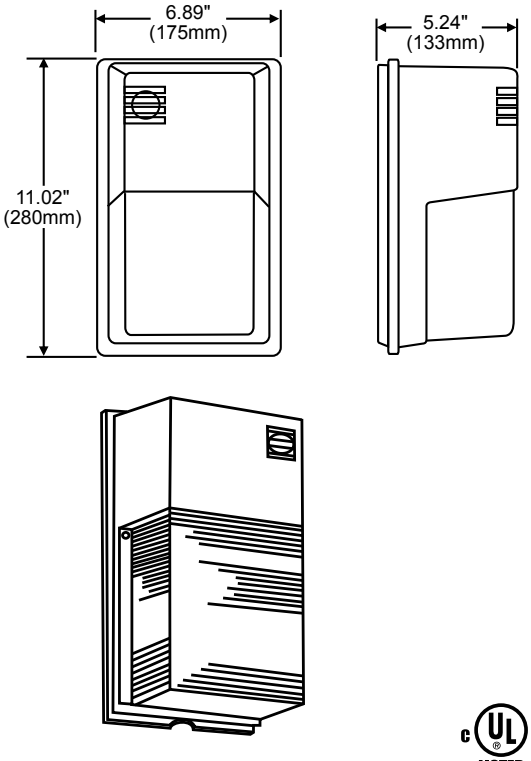

WET LOCATION

13W Wall Mount LED

Item Number	Description	W	V	CRI	CCT	Total Lms*	Lms/ Watt	Dimensions	Equivalent	UPC	Pack
65-062	LED ENTRANCE LIGHT 13W - PHOTO CELL BRONZE/PRISMATIC LENS	13	120	70	5000K	908	58	6 ⅞" W x 11" H x 5 ¼" Ext.	50-70W MET. HAL.	045923630620	6/1

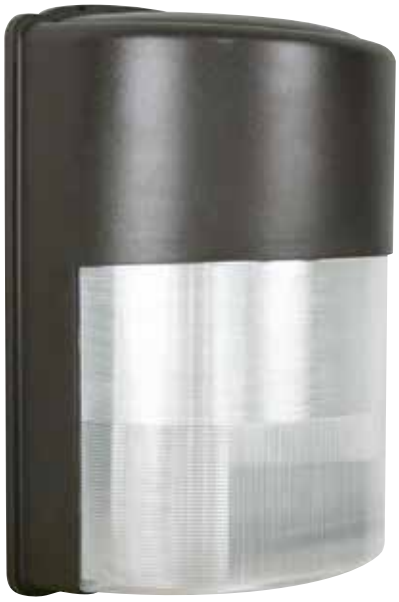

26W LED wall pack

Bronze Finish / Prismatic Lens

Features
- UL listed
- Die-cast aluminum body
- UV stabilized powder coated finish
- Prismatic lens for uniform light distribution
- Suitable for wet locations
- 5 Year warranty

Specifications
- 26W
- 1691 Lumens*
- 120-277V
- 5000K
- 70 CRI
- 70-100W MH Equivalent
- Operating temperature: –40°C to 40°C
- Long life—35,000 hours

Dimensions

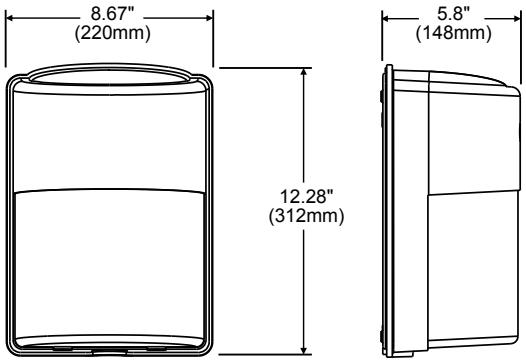

c UL us LISTED
WET LOCATION

RoHS COMPLIANT

26W Wall Mount LED

Item Number	Description	W	V	CRI	CCT	Total Lms*	Lms/ Watt	Dimensions	Equivalent	UPC	Pack
65-063	LED ENTRANCE LIGHT 26W BRONZE/PRISMATIC LENS	26	120-277	70	5000K	1691	65	8 11/16" W x 12 1/4" H x 5 13/16" Ext.	70-100W MET. HAL.	045923630637	6/1

20W LED adjustable wall pack with or without photo control

Bronze Finish

Features

- DLC and ETL Listed
- Dark sky friendly
- IP65 Rated enclosure
- Die cast aluminum housing with hinged front frame
- Suitable for wet locations
- Enhanced security photocell option – On at dusk / Off at dawn
- Adjustable fixture head angle (0-90°)
- 5 Year warranty

Specifications

- 20W
- 1800 Lumens*
- 120-277V
- 5000K
- 75 CRI
- 70-100W MH Equivalent
- Operating temperature: –25°C to 40°C
- Long life—50,000 hours

65-101
65-102 with photocell

Dimensions

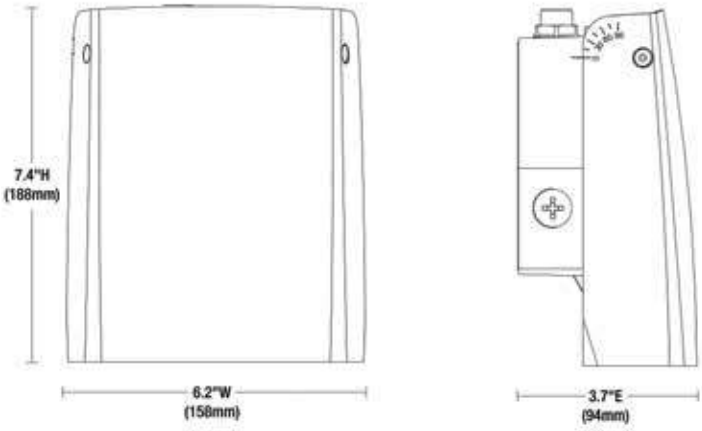

WET LOCATION

20W LED Wall Mount

Item Number	Description	W	V	CRI	CCT	Total Lms*	Lms/ Watt	Dimensions	Equivalent	UPC	Pack
65-101	LED ADJUSTABLE WALL PACK 20W BRONZE	20	120~277	75	5000K	1800	90	6 3/16" W x 7 3/8" H x 3 11/16" Ext.	70-100W MET. HAL.	045923671012	8/1
65-102	LED ADJUSTABLE WALL PACK 20W BRONZE WITH PHOTO CELL	20	120	75	5000K	1800	90	6 3/16" W x 7 3/8" H x 3 11/16" Ext.	70-100W MET. HAL.	045923671029	8/1

30W LED adjustable wall pack with or without photo control

Bronze Finish

65-103
65-104 with photocell

Features

- ETL Listed
- Dark sky friendly
- IP65 Rated enclosure
- Die-cast aluminum housing with hinged front frame
- Suitable for wet locations
- Enhanced security photocell option – On at dusk / Off at dawn
- Adjustable fixture head angle (0-90°)
- 5 Year warranty

Specifications

- 30W
- 2700 Lumens*
- 120-277V
- 5000K
- 75 CRI
- 100-150W MH Equivalent
- Operating temperature: –25°C to 40°C
- Long life—50,000 hours

Dimensions

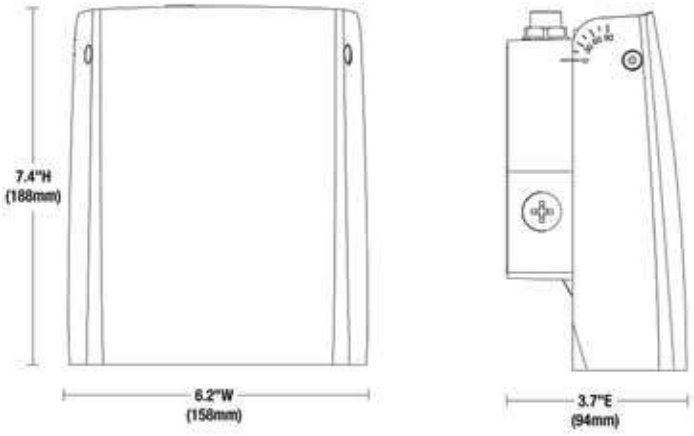

30W LED Wall Mount

WET LOCATION

Item Number	Description	W	V	CRI	CCT	Total Lms*	Lms/ Watt	Dimensions	Equivalent	UPC	Pack
65-103	LED ADJUSTABLE WALL PACK 30W BRONZE	30	120~277	75	5000K	2700	90	6 3/16" W x 7 3/8" H x 3 11/16" Ext.	100-150W MET. HAL.	045923671036	8/1
65-104	LED ADJUSTABLE WALL PACK 30W BRONZE WITH PHOTO CELL	30	120	75	5000K	2700	90	6 3/16" W x 7 3/8" H x 3 11/16" Ext.	100-150W MET. HAL.	045923671043	8/1

11W, 20W LED slim wall pack

Bronze Finish

Features

- DLC and ETL listed
- Dark sky friendly
- IP65 Rated enclosure
- Die-cast aluminum housing
- Suitable for wet locations
- 5 Year warranty

Specifications

- 120-277V
- 5000K
- 75 CRI
- Operating temperature: –25°C to 40°C
- Long life—50,000 hours

Dimensions

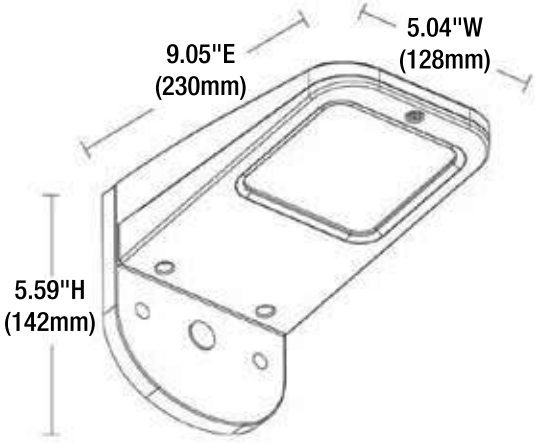

11W LED Slim Wall Pack

WET LOCATION

Item Number	Description	W	V	CRI	CCT	Total Lms*	Lms/ Watt	Dimensions	Equivalent	UPC	Pack
65-095	LED SLIM WALL PACK 11W BRONZE	11	120-277	75	5000K	1000	91	5 3/8" W x 5 9/16" H x 9 1/16" Ext.	50-70W MET. HAL.	045923630958	4/1
65-096	LED SLIM WALL PACK 20W BRONZE	20	120-277	75	5000K	1800	90	5 3/8" W x 5 9/16" H x 9 1/16" Ext.	70-100W MET. HAL.	045923630965	4/1

38W LED arc wall pack with photocell

Bronze Finish

Features

- DLC and ETL listed
- Dark sky friendly
- IP65 Rated enclosure
- Die-cast aluminum housing
- Suitable for wet locations
- 5 Year warranty

Specifications

- 38W
- 3500 Lumens*
- 120-277V
- 5000K
- 75 CRI
- 100-150W MH Equivalent
- Operating temperature: –25°C to 40°C
- Long life—50,000 hours

Dimensions

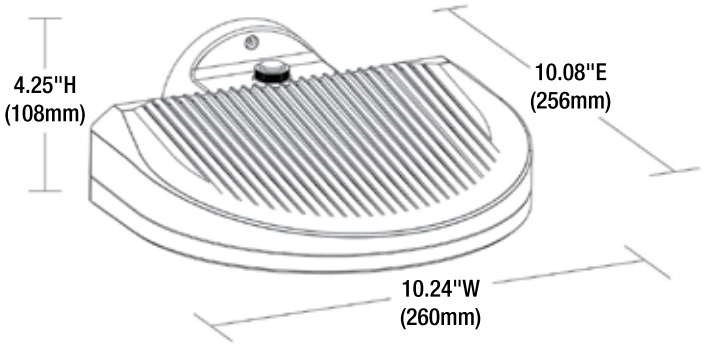

38W LED Arc Wall Pack

WET LOCATION

Item Number	Description	W	V	CRI	CCT	Total Lms*	Lms/ Watt	Dimensions	Equivalent	UPC	Pack
65-097	LED ARC WALL PACK 38W BRONZE	38	120-277	75	5000K	3500	92	10 ¼" W x 4 ¼" H x 10 1⁄16" Ext.	100-150W MET. HAL.	045923630972	4/1

32W LED adjustable arc wall pack

Bronze Finish

Features

- DLC and ETL listed
- Dark sky friendly
- IP65 Rated enclosure
- Die-cast aluminum housing
- Suitable for wet locations
- 5 Year warranty

Specifications

- 32W
- 2900 Lumens*
- 120-277V
- 5000K
- 75 CRI
- 100-150W MH Equivalent
- Operating temperature: –25°C to 40°C
- Long life—50,000 hours

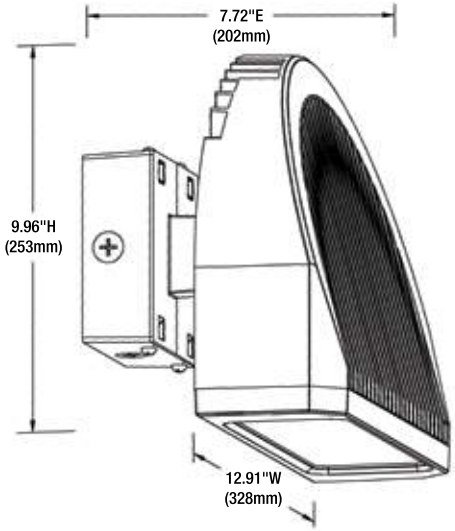

32W LED Arc Wall Pack

WET LOCATION

Item Number	Description	W	V	CRI	CCT	Total Lms*	Lms/ Watt	Dimensions	Equivalent	UPC	Pack
65-098	LED ADJUSTABLE ARC WALL PACK - 32W BRONZE	32	120-277	75	5000K	2900	91	12 15/16" W x 9 15/16" H x 7 3/4" Ext.	100-150W MET. HAL.	045923630989	2/1

LED small wall pack

Applications

- Commercial or residential
- Entryways
- Pathways
- Patios

Features

- 11W, 18W or 27W
- Bronze finish
- Rugged construction
- Die-cast aluminum body
- High impact resistant tempered glass
- UV stabilized powder coated finish
- 120-277V
- -40˚C Starting temperature
- 5000K
- 11W, 70W MH equivalent
- 18W, 100W MH equivalent
- 27W, 150W MH equivalent
- Suitable for wet locations
- 100,000 Hour life
- 5 Year warranty

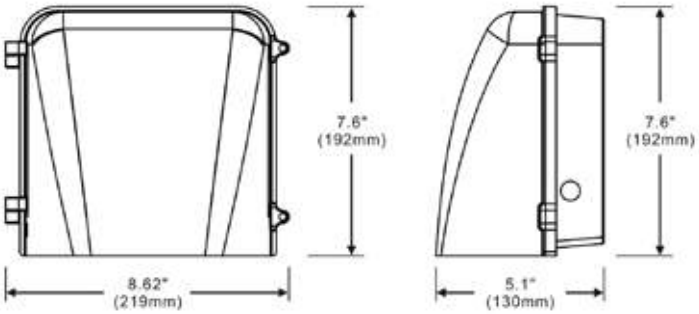

LED Small Wall Pack

WET LOCATION | 5000 K | 70 CRI | 100,000 HOURS | DLC | c UL us LISTED | RoHS COMPLIANT

Item Number	Lamp Description	W	V	Finish	CCT	Lm	CRI	Life/ Hrs.	UPC	Pack/ Mstr.
65-131	11W SMALL WALL PACK	11	120-277	Bronze	5000K	1575	70	100K	045923671319	1
65-132	18W SMALL WALL PACK	18	120-277	Bronze	5000K	2407	70	100K	045923671326	1
65-133	27W SMALL WALL PACK	27	120-277	Bronze	5000K	3315	70	100K	045923671333	1

LED large wall pack

Applications

- Commercial or residential
- Entryways
- Pathways
- Patios

Features

- 36W, 49W or 76W
- Bronze finish
- Rugged construction
- Die-cast aluminum body
- High impact resistant tempered glass
- UV stabilized powder coated finish
- 120-277V
- 5000K
- -40˚C Starting temperature
- 26W, 100W MH equivalent
- 49W, 100–250W MH equivalent
- 76W, 250W MH equivalent
- Suitable for wet locations
- 100,000 Hour life
- 5 Year warranty

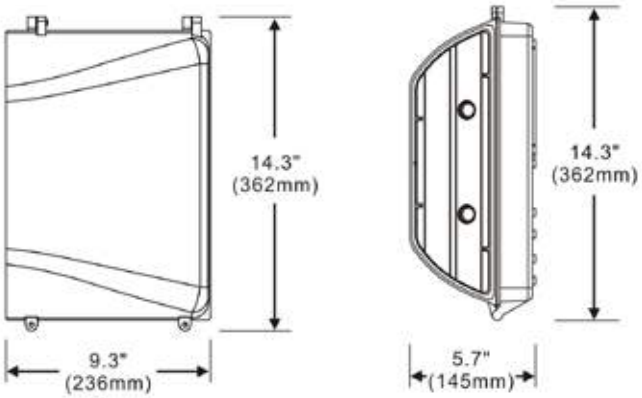

LED Large Wall Pack

WET LOCATION | 5000 K | 70 CRI | 100,000 HOURS | DLC | c UL us LISTED | RoHS COMPLIANT

Item Number	Lamp Description	W	V	Finish	CCT	Lm	CRI	Life/ Hrs.	UPC	Pack/ Mstr.
65-134	36W LARGE WALL PACK	36	120-277	Bronze	5000K	5075	70	100K	045923671340	1
65-135	49W LARGE WALL PACK	49	120-277	Bronze	5000K	6347	70	100K	045923671357	1
65-136	76W LARGE WALL PACK	76	120-277	Bronze	5000K	9174	70	100K	045923671364	1

11W, 15W LED small wall pack

Applications

- Commercial or residential
- Entryways
- Pathways
- Patios

Features

- 11W or 15W
- White or gray finish
- Rugged construction
- Die-cast aluminum body
- High impact resistant tempered glass
- UV stabilized powder coated finish
- 120-277V
- 60˚ Beam angle
- -25˚C Starting temperature
- 3000K or 4000K
- 3000K Dark sky certified†
- 11W, 70W MH equivalent
- 15W, 100W MH equivalent
- Suitable for wet locations
- Long life—50,000 Hours
- 5 Year warranty

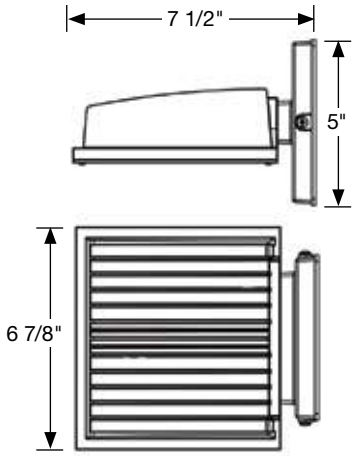

LED Small Wall Pack

Item Number	Lamp Description	W	V	Finish	CCT	Lm	CRI	Dimensions	Life/ Hrs.	UPC	Pk./ Mstr.
65-151†	11W LED WALL PACK	11	120-277	Gray	3000K	1255	80	6 ⅞" W x 7 ½" L x 5" H	50K	045923671517	12
65-152	11W LED WALL PACK	11	120-277	Gray	4000K	1261	80	6 ⅞" W x 7 ½" L x 5" H	50K	045923671524	12
65-153†	11W LED WALL PACK	11	120-277	White	3000K	1255	80	6 ⅞" W x 7 ½" L x 5" H	50K	045923671531	12
65-154	11W LED WALL PACK	11	120-277	White	4000K	1261	80	6 ⅞" W x 7 ½" L x 5" H	50K	045923671548	12
65-155†	15W LED WALL PACK	15	120-277	Gray	3000K	1650	80	6 ⅞" W x 7 ½" L x 5" H	50K	045923671555	12
65-156	15W LED WALL PACK	15	120-277	Gray	4000K	1688	80	6 ⅞" W x 7 ½" L x 5" H	50K	045923671562	12
65-157†	15W LED WALL PACK	15	120-277	White	3000K	1650	80	6 ⅞" W x 7 ½" L x 5" H	50K	045923671579	12
65-158	15W LED WALL PACK	15	120-277	White	4000K	1688	80	6 ⅞" W x 7 ½" L x 5" H	50K	045923671586	12

21W, 30W LED large wall pack

Applications

- Commercial or residential
- Entryways
- Pathways
- Patios

Features

- 21W or 30W
- White or gray finish
- Rugged construction
- Die-cast aluminum body
- High impact resistant tempered glass
- UV stabilized powder coated finish
- 120-277V
- 60˚ Beam angle
- -25˚C Starting temperature
- 3000K or 4000K
- 3000K Dark sky certified†
- 21W, 100W MH equivalent
- 30W, 150W MH equivalent
- Suitable for wet locations
- Long life—50,000 Hours
- 5 Year warranty

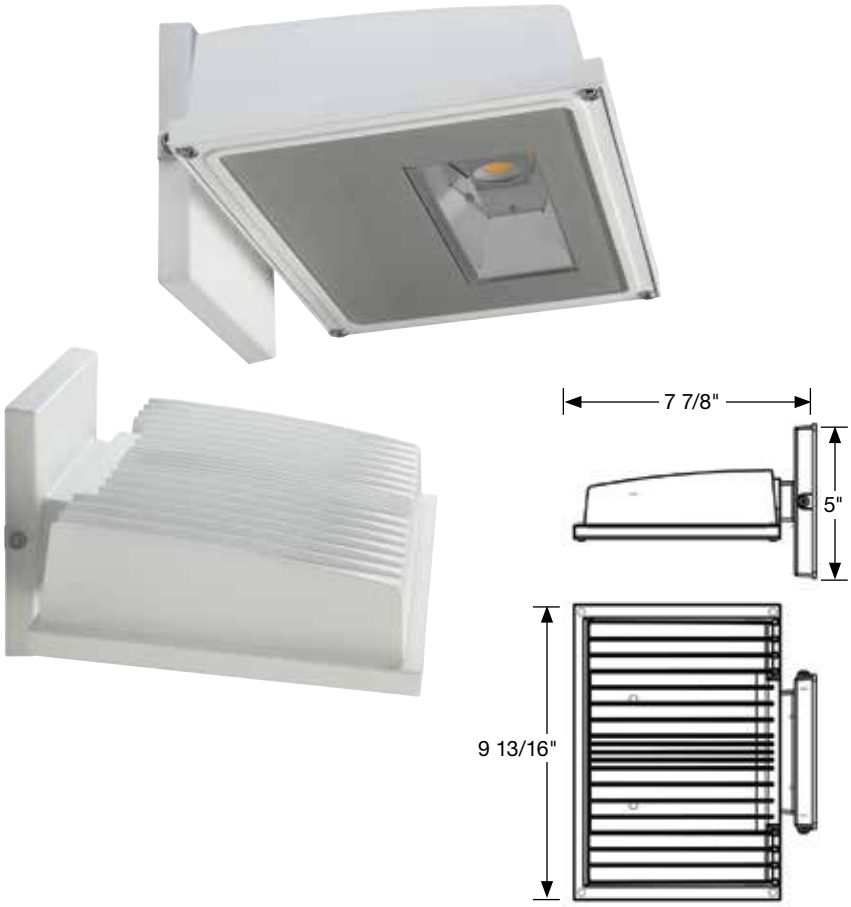

LED Large Wall Pack

Item Number	Lamp Description	W	V	Finish	CCT	Lm	CRI	Dimensions	Life/ Hrs.	UPC	Pk./ Mstr.
65-159†	21W LED WALL PACK	21	120-277	Gray	3000K	2310	80	9 13/16" W x 7 7/8" L x 5" H	50K	045923671593	8
65-160	21W LED WALL PACK	21	120-277	Gray	4000K	2346	80	9 13/16" W x 7 7/8" L x 5" H	50K	045923671609	8
65-161†	21W LED WALL PACK	21	120-277	White	3000K	2310	80	9 13/16" W x 7 7/8" L x 5" H	50K	045923671616	8
65-162	21W LED WALL PACK	21	120-277	White	4000K	2346	80	9 13/16" W x 7 7/8" L x 5" H	50K	045923671623	8
65-163*†	30W LED WALL PACK	30	120-277	Gray	3000K	2884	80	9 13/16" W x 7 7/8" L x 5" H	50K	045923671630	8
65-164	30W LED WALL PACK	30	120-277	Gray	4000K	3339	80	9 13/16" W x 7 7/8" L x 5" H	50K	045923671647	8
65-165*†	30W LED WALL PACK	30	120-277	White	3000K	2884	80	9 13/16" W x 7 7/8" L x 5" H	50K	045923671654	8
65-166	30W LED WALL PACK	30	120-277	White	4000K	3339	80	9 13/16" W x 7 7/8" L x 5" H	50K	045923671661	8

39W LED wall pack security flood

Bronze Finish / Borosilicate Glass

Features

- Die-cast aluminum body
- UV stabilized powder coated finish
- Suitable for wet locations
- Heat and impact resistant borosilicate glass lens
- 5 Year warranty

Specifications

- 39W
- 4553 Lumens*
- 120-277V
- 5000K
- 70 CRI
- 100-150W MH Equivalent
- Operating temperature: –40°C to 40°C
- Long life—100,000 hours

Dimensions

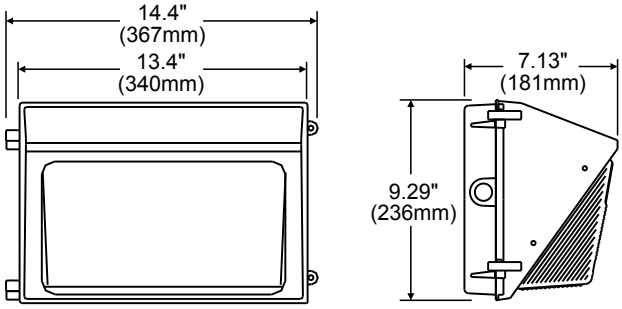

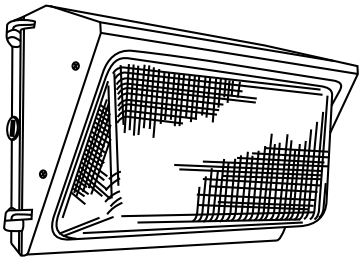

39W Wall Pack LED Security Flood

WET LOCATION

Item Number	Description	W	V	CRI	CCT	Total Lms*	Lms/ Watt	Dimensions	Equivalent	UPC	Pack
65-056R1	LED WALL PACK 39W BRONZE/ BOROSILICATE GLASS	39	120-277	70	5000K	4553	116	14 ⅜" W x 9 ⁵⁄₁₆" H x 7 ⅛" Ext.	100-150W MET. HAL.	045923630569	6/1

49W LED wall pack security flood

Bronze Finish / Borosilicate Glass

Features

- UL listed
- Die-cast aluminum body
- UV stabilized powder coated finish
- Suitable for wet locations
- Heat and impact resistant borosilicate glass lens
- 5 Year warranty

Specifications

- 49W
- 5695 Lumens*
- 120-277V
- 5000K
- 70 CRI
- 150-200W MH Equivalent
- Operating temperature: –40°C to 40°C
- Long life—100,000 hours

Dimensions

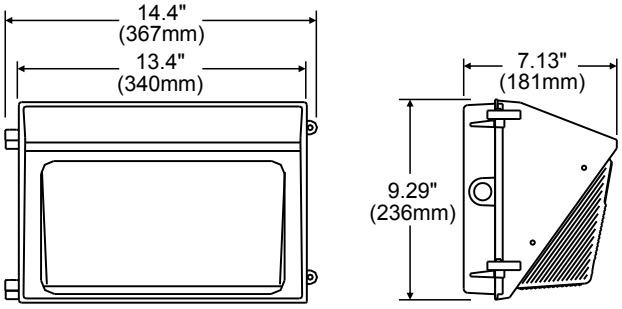

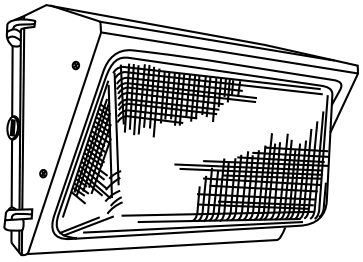

49W Wall Pack LED Security Flood

WET LOCATION

Item Number	Description	W	V	CRI	CCT	Total Lms*	Lms Watt	Dimensions	Equivalent	UPC	Pack
65-057R1	LED WALL PACK 49W BRONZE/BOROSILICATE GLASS	49	120~277	70	5000K	5695	116	14 ⅜" W x 9 5⁄16" H x 7 ⅛" Ext.	150-200W MET. HAL.	045923630576	6/1

76W LED wall pack security flood

Bronze Finish / Borosilicate Glass

Features

- Die-cast aluminum body
- UV stabilized powder coated finish
- Suitable for wet locations
- Heat and impact resistant borosilicate glass lens
- 5 Year warranty

Specifications

- 76W
- 9212 Lumens*
- 120-277V
- 5000K
- 70 CRI

- 100-150W MH Equivalent
- Operating temperature: –40°C to 40°C
- Long life—100,000 hours

Dimensions

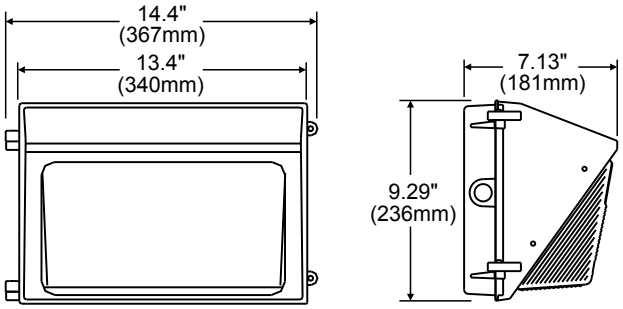

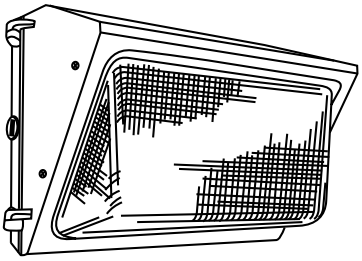

76W Wall Pack LED Security Flood

WET LOCATION

Item Number	Description	W	V	CRI	CCT	Total Lms*	Lms/ Watt	Dimensions	Equivalent	UPC	Pack
65-049	LED WALL PACK 76W BRONZE/ BOROSILICATE GLASS	76	120-277	70	5000K	9212	121	13 3/32" W x 9 5/32" H	100-150W MET. HAL.	045923650499	1

81W LED wall pack security flood

Bronze Finish / Borosilicate Glass

Features

- UL listed
- Die-cast aluminum body
- UV stabilized powder coated finish
- Suitable for wet locations
- Heat and impact resistant borosilicate glass
- 5 Year warranty

Specifications

- 81W
- 9768 Lumens*
- 120-277V
- 5000K
- 70 CRI
- 250W MH Equivalent
- Operating temperature: –40°C to 40°C
- Long life—55,000 hours

Dimensions

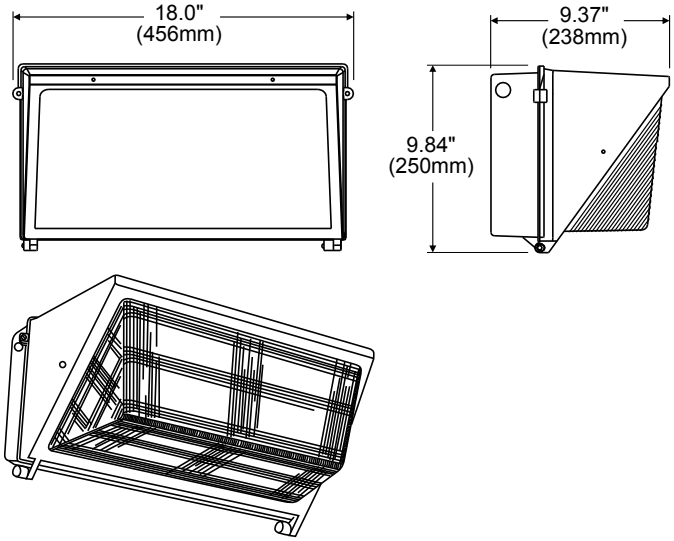

81W Wall Pack LED Security Flood

WET LOCATION

Item Number	Description	W	V	CRI	CCT	Total Lms*	Lms/ Watt	Dimensions	Equivalent	UPC	Pack
65-058R1	LED WALL PACK 81W BRONZE/ BOROSILICATE GLASS	81	120-277	70	5000K	9768	120	18" W x 9 13/16" H x 9 3/8" Ext.	250W MET. HAL.	045923630583	1

120W LED wall pack security flood

Bronze Finish / Borosilicate Glass

Features

- UL listed
- Die-cast aluminum body
- UV stabilized powder coated finish
- Suitable for wet locations
- Heat and impact resistant borosilicate glass
- 5 Year warranty

Specifications

- 120W
- 15573 Lumens*
- 120-277V
- 5000K
- 70 CRI
- 400W MH Equivalent
- Operating temperature: –40°C to 40°C
- Long life—57,000 hours

Dimensions

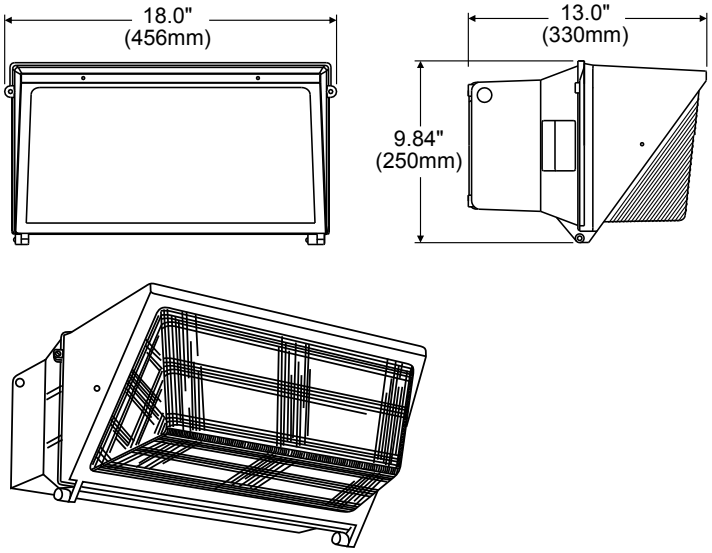

120W Wall Pack LED Security Flood

c UL us LISTED
WET LOCATION

RoHS COMPLIANT

Item Number	Description	W	V	CRI	CCT	Total Lms*	Lms/ Watt	Dimensions	Equivalent	UPC	Pack
65-059R1	LED WALL PACK 160 BRONZE/BOROSILICATE GLASS	120	120-277	70	5000K	15573	99	18" W x 9 13/16" H x 13" Ext.	400W MET. HAL.	045923670596	1

39W LED low profile canopy fixture

Bronze Finish / Glare Free Lens

Features

- DLC & UL listed
- Die-cast aluminum body
- UV stabilized powder coated finish
- Ceiling or 3/4" pendant mounting
- Suitable for wet locations
- Glare free lens
- 5 Year warranty

Specifications

- 39W
- 4803 Lumens*
- 120-277V
- 5000K
- 70 CRI
- 100-150W MH Equivalent
- Operating temperature: –40°C to 40°C
- Long life—100,000 hours

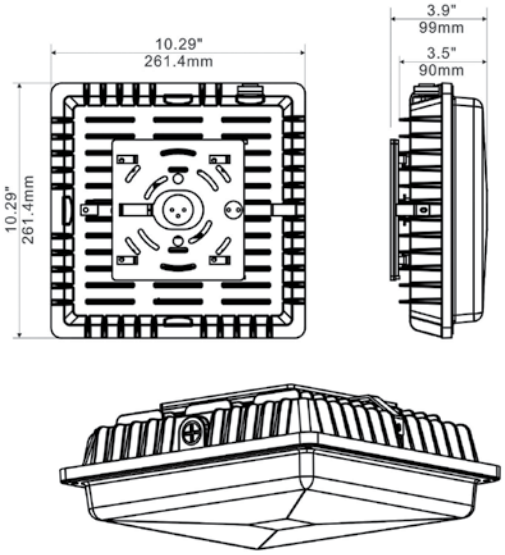

39W Low Profile LED Canopy Fixture

WET LOCATION

Item Number	Description	W	V	CRI	CCT	Total Lms*	Lms/ Watt	Dimensions	Equivalent	UPC	Pack
65-073R1	LED CANOPY FIXTURE 39W BRONZE FINISH	39	120-277	70	5000K	4803	120	10 ¼" W x 3 ¾" H	100-150W MET. HAL.	045923630736	6/1

58W LED low profile canopy fixture

Bronze Finish / Glare Free Lens

Features

- DLC & UL listed
- Die-cast aluminum body
- UV stabilized powder coated finish
- Ceiling or 3/4" pendant mounting
- Suitable for wet locations
- Glare free lens
- 5 Year warranty

Specifications

- 58W
- 6375 Lumens*
- 120-277V
- 5000K
- 70 CRI
- 150-200W MH Equivalent
- Operating temperature: –40°C to 40°C
- Long life—100,000 hours

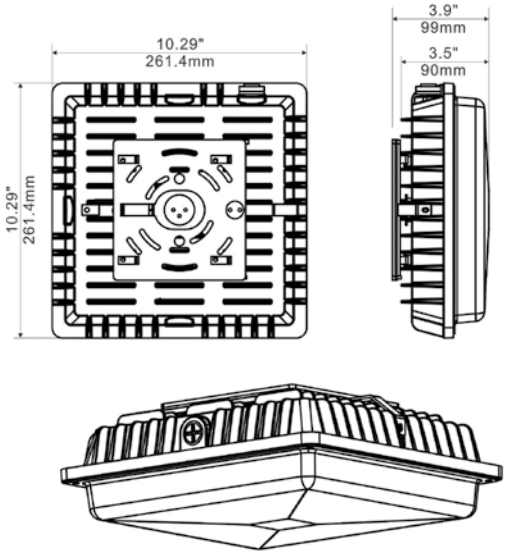

58W Low Profile LED Canopy Fixture

WET LOCATION

Item Number	Description	W	V	CRI	CCT	Total Lms*	Lms/ Watt	Dimensions	Equivalent	UPC	Pack
65-074R1	LED CANOPY FIXTURE 58W BRONZE FINISH	58	120-277	70	5000K	6375	110	10 ¼" W x 3 ¾" H	150-200W MET. HAL.	045923630743	6/1

41W and 58W LED wall mount carport/ parking area fixtures

65-055, 65-054

Gray Finish / Polycarbonate Diffuser

Features

- DLC & UL listed
- Die-cast aluminum body
- UV stabilized powder coated finish
- Uniform light distribution
- Suitable for wet locations
- Photo control – On at dusk / Off at dawn
- 5 Year warranty

Specifications

- 41W & 58W
- 120V
- 5000K
- 70 CRI
- 150-200W MH Equivalent
- Operating temperature: –40°C to 40°C
- Long life—40,000 hours

Dimensions

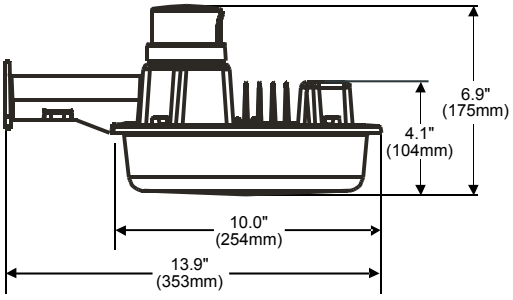

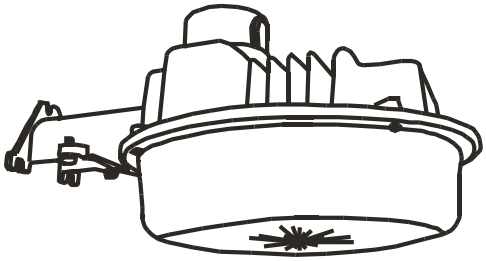

Accessories

Aluminum Andonized Arm
Item no. 65-084

WET LOCATION

LED Carport/Parking Area Fixture

Item Number	Description	W	V	CRI	CCT	Total Lms	Lms/ Watt	Dimensions	Equivalent	UPC	Pack
65-055	LED AREA LIGHT 41W GRAY FINISH	41	120	70	5000K	3194	77	10" W x 6 ⅞" H x 9 ⅞" Ext.	150-200W MET. HAL.	045923630552	6/1
65-054	LED AREA LIGHT 58W GRAY FINISH	58	120	70	5000K	5441	93	10" W x 6 ⅞" H x 9 ⅞" Ext.	200W MET. HAL.	045923630545	6/1
Accessories											
65-084	ALUMINUM ANODIZED ARM FOR CARPORT/PARKING AREA FIXTURE							21"		045923630842	4/1

13W Wall & ceiling LED vapor proof fixtures

Silver Finish

65-078 65-079

Features

- UL listed
- Die-cast aluminum body
- UV stabilized powder coated finish
- 1/2" Conduit plugs – all four sides
- Suitable for wet locations
- 5 Year warranty

Specifications

- 13W
- 850 Lumens*
- 120-277V
- 5000K
- 70 CRI
- 50-70W MH Equivalent
- Operating temperature: –40°C to 40°C
- Long life—35,000 hours

Dimensions

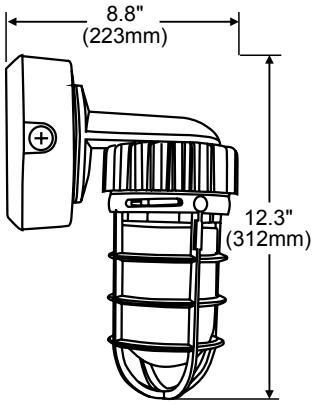

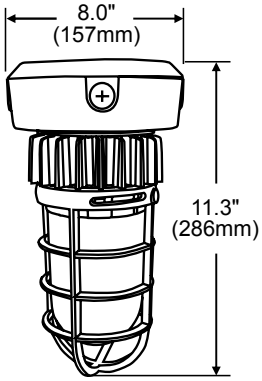

c UL us LISTED
WET LOCATION

RoHS COMPLIANT

13W Wall & Ceiling Vapor Proof LED Fixture

Item Number	Description	W	V	CRI	CCT	Total Lms*	Lms/ Watt	Dimensions	Equivalent	UPC	Pack
65-078	LED VAPOR PROOF WALL MOUNT SILVER FINISH	13	120-277	70	5000K	850	65	8" W x 12 5/16" H x 8 13/16" Ext.	50-70W MET. HAL.	045923630781	6/1
65-079	LED VAPOR PROOF CEILING MOUNT SILVER FINISH	13	120-277	70	5000K	850	65	8" W x 11 5/16" H	50-70W MET. HAL.	045923630798	6/1

LED bulkhead fixture

Attractive, high efficiency indoor/outdoor wall fixture

Applications

- Docks
- Walkways
- Entrances
- Hallways
- Lobbies
- Patios
- Pool decks

Features

- 20 Watts
- White or Black finish with frosted glass
- Rugged construction
- Die-cast aluminum body
- UV stabilized powder coated finish
- Suitable for wet locations
- 100-277V
- 1440 Lumens
- 3000K
- 90 CRI
- Long life—50,000 hours
- ENERGY STAR certified*
- 5 Year warranty

65-113

65-114

LED Bulkhead Fixture

Item Number	Lamp Description	W	V	Finish	CCT	Lm	CRI	Life/ Hrs.	UPC	Pack/ Mstr.
65-113*	20W LED BULK HEAD WHITE	20	100-277	White	3000K	1440	90	50K	045923451133	2
65-114*	20W LED BULK HEAD BLACK	20	100-277	Black	3000K	1440	90	50K	045923451140	2

LED up/down outdoor wall fixture

Attractive, high efficiency outdoor wall fixture

Applications

- Residential or commercial use
- Entrances
- Hallways
- Lobbies
- Patios

Features

- 60W/100W equivalent
- 10 Watts / 20 Watts
- White, Black or Bronze finish
- Die-cast aluminum body
- UV stabilized powder coated finish
- Suitable for wet locations
- 120-277V
- 3000K
- 90 CRI
- Long life—50,000 hours
- ETL listed
- ENERGY STAR certified*
- 5 Year warranty

62-1141

62-1142

62-1145

Dimensions: 5" W x 6 3/4" H x 3 1/8" Ext.

62-1143

62-1144

62-1146

Dimensions: 5" W x 11 3/4" H x 3 7/8" Ext.

LED Up/Down Outdoor Wall Fixture

Item Number	Description	W	Finish	Light Source	CCT	Lm	CRI	Life/ Hrs.	UPC	Pack
62-1141*	(2) 5W/LED/3000K/90CRI/120-277V	10	White	LED Module	3000K	700	90	50K	045923411410	10/1
62-1142*	(2) 5W/LED/3000K/90CRI/120-277V	10	Black	LED Module	3000K	700	90	50K	045923511424	10/1
62-1145*	(2) 5W/LED/3000K/90CRI/120-277V	10	Bronze	LED Module	3000K	700	90	50K	045923711459	10/1
62-1143*	(2) 10W/LED/3000K/90CRI/120-277V	20	White	LED Module	3000K	1400	90	50K	045923511431	5/1
62-1144*	(2) 10W/LED/3000K/90CRI/120-277V	20	Black	LED Module	3000K	1400	90	50K	045923511448	5/1
62-1146*	(2) 10W/LED/3000K/90CRI/120-277V	20	Bronze	LED Module	3000K	1400	90	50K	045923711466	5/1

LED recessed retrofits or new recessed installations,

Lighting projects have a way of coming with many variables. Ceiling heights, room size and purpose, and code requirements all make for a challenging lighting plan. Now, any recessed application can enjoy the efficiency of the most current LED technology. Our LED recessed fixtures include residential and commercial direct wire, edge lit, square trim and gimbal models, and include the most versatile series of all, our Freedom ™ line.
Freedom recessed LED fixtures help make the process easier by providing many options—hundreds to be exact—from just one basic retrofit. Multiple beam angles, fixture sizes, Lumens, color temperatures and trims give you the Freedom to create the look you want and the performance you need. With all recessed LED fixtures from Nuvo, multiple solutions for new installs or renovations are available to meet most any project requirement.

we have the solution.

LED horizontal step light

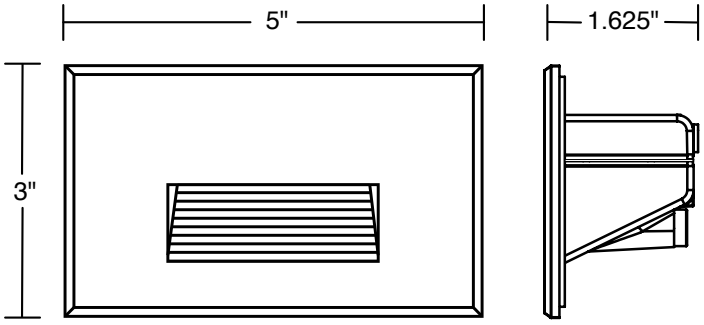

Features

- 5W
- Bronze, White or Gray finish
- Rugged construction
- No transformer required
- Easy installation
- UV stabilized powder coated finish
- Dimmable**
- 120V or 277V versions
- 3000K
- Suitable for wet locations
- cULus listed
- Long life—50,000 hours
- 5 Year warranty

DIMMABLE | WET LOCATION | 3000 K | 80 CRI | 50,000 HOURS | c UL us LISTED

LED Horizontal Step Light

Item Number	Lamp Description	W	V	Finish	CCT	Lm	CRI	Life/ Hrs.	UPC	Pack/ Mstr.
65-403**	5W HORIZONTAL STEP LIGHT	5	120	Bronze	3000K	407	80	50K	045923554032	24
65-404	5W HORIZONTAL STEP LIGHT	5	277	Bronze	3000K	407	80	50K	045923554049	24
65-407**	5W HORIZONTAL STEP LIGHT	5	120	White	3000K	407	80	50K	045923554070	24
65-408	5W HORIZONTAL STEP LIGHT	5	277	White	3000K	407	80	50K	045923554087	24
65-411**	5W HORIZONTAL STEP LIGHT	5	120	Gray	3000K	407	80	50K	045923554117	24
65-412	5W HORIZONTAL STEP LIGHT	5	277	Gray	3000K	407	80	50K	045923554124	24

*Minimum interior box volume of 13 cubic inches. **120V Only

LED vertical step light

Features

- 3W
- Bronze, White or Gray finish
- Rugged construction
- No transformer required
- Easy installation*
- UV stabilized powder coated finish
- Dimmable**
- 120V or 277V versions
- 3000K
- Suitable for wet locations
- cULus listed
- Long life—50,000 hours
- 5 Year warranty

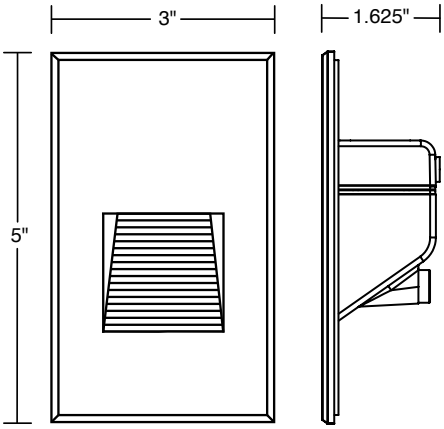

LED Vertical Step Light

DIMMABLE | WET LOCATION | 3000 K | 80 CRI | 50,000 HOURS | c UL us LISTED

Item Number	Lamp Description	W	V	Finish	CCT	Lm	CRI	Life/ Hrs.	UPC	Pack/ Mstr.
65-401**	3W VERTICAL STEP LIGHT	3	120	Bronze	3000K	200	80	50K	045923554018	24
65-402	3W VERTICAL STEP LIGHT	3	277	Bronze	3000K	220	80	50K	045923554025	24
65-405**	3W VERTICAL STEP LIGHT	3	120	White	3000K	200	80	50K	045923554056	24
65-406	3W VERTICAL STEP LIGHT	3	277	White	3000K	220	80	50K	045923554063	24
65-409**	3W VERTICAL STEP LIGHT	3	120	Gray	3000K	200	80	50K	045923554094	24
65-410	3W VERTICAL STEP LIGHT	3	277	Gray	3000K	220	80	50K	045923554100	24

*Minimum interior box volume of 13 cubic inches **120V Only

FREEDOM™ architectural LED downlights & retrofits

It takes just 3 steps to solve dozens of lighting challenges. Start by choosing the housing size. This also contains your color temperature, including warm-dimming. Then choose the beam angle you need for the item or area you're lighting. Finally, choose the trim ring. That's it. You're on the way to creating a consistent, functional lighting plan that covers almost every lighting need.

3 Easy steps to customize your Freedom downlight/retrofit.

1

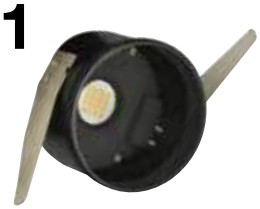

Select color temperature

2

Select beam angle

3

Select trim

Start with the housing size and color temperature

- 4"
- 5"/6"

- 2700K
- 3000K
- 4000K
- 5000K
- 2700K-2200K Warm Dimming

Add the beam angle and optics

4"	5/6"
• 30°	• 35°
• 40°	• 45°
• 60°	• 60°
• 95°	• 95°

Choose your trim finish and shape, round or square

- White
- Brushed Nickel
- Polished Nickel
- Bronze

4" LED housings and reflectors

Available recessed cans pg. 114

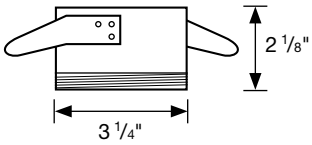

S9500 4" LED Housing – 10W, 2700K, 90CRI

Reflector Numbers	Reflector Angle	ENERGY STAR Numbers	Brightness (lumens)
S9508	30 deg	S9500-30	540
S9509	40 deg	S9500-40	540
S9510	60 deg	S9500-60	540
S9511	95 deg	S9500-95	500

S9501 4" LED Housing – 10W, 3000K, 90CRI

Reflector Numbers	Reflector Angle	ENERGY STAR Numbers	Brightness (lumens)
S9508	30 deg	S9501-30	550
S9509	40 deg	S9501-40	550
S9510	60 deg	S9501-60	550
S9511	95 deg	S9501-95	500

S9502 4" LED Housing – 10W, 4000K, 90CRI

Reflector Numbers	Reflector Angle	ENERGY STAR Numbers	Brightness (lumens)
S9508	30 deg	S9502-30	600
S9509	40 deg	S9502-40	600
S9510	60 deg	S9502-60	600
S9511	95 deg	S9502-95	550

S9503 4" LED Housing – 10W, 5000K, 80CRI

Reflector Numbers	Reflector Angle	ENERGY STAR Numbers	Brightness (lumens)
S9508	30 deg	S9503-30	700
S9509	40 deg	S9503-40	700
S9510	60 deg	S9503-60	700
S9511	95 deg	S9503-95	650

S9524 4" LED Housing – 10W, 2700K-2200K, 83CRI

Reflector Numbers	Reflector Angle	ENERGY STAR Numbers†	Brightness @ 2700K (lumens)†
S9508	30 deg	S9524-30	540
S9509	40 deg	S9524-40	540
S9510	60 deg	S9524-60	540
S9511	95 deg	S9524-95	500

†ENERGY STAR rating relates to 2700K CCT setting only

S9508 4" Reflector – 30° Beam angle

Beam angle

30°

Beam Profile

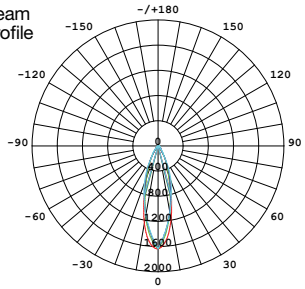

S9509 4" Reflector – 40° Beam angle

Beam angle

40°

Beam Profile

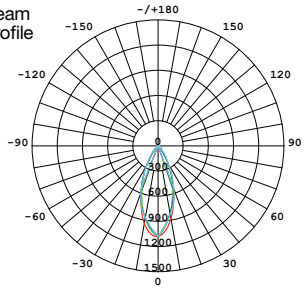

S9510 4" Reflector – 60° Beam angle

Beam angle

60°

Beam Profile

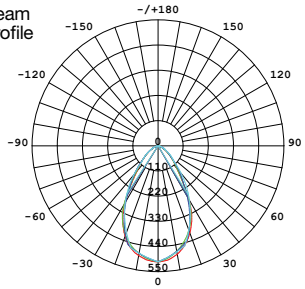

S9511 4" Reflector – 95° Beam angle

Beam angle

95°

Beam Profile

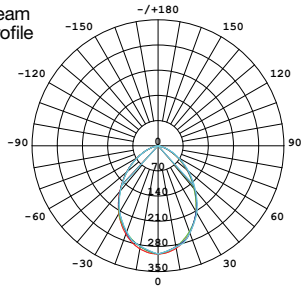

5"/6" LED housings and reflectors

Available recessed cans pg. 114

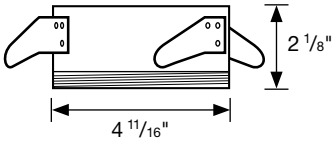

S9504 5/6" LED Housing – 13.5W, 2700K, 90CRI

Reflector Numbers	Reflector Angle	ENERGY STAR Numbers	Brightness (lumens)
S9512	35 deg	S9504-35	830
S9513	45 deg	S9504-45	830
S9514	60 deg	S9504-60	830
S9515	95 deg	S9504-95	760

S9505 5/6" LED Housing – 13.5W, 3000K, 90CRI

Reflector Numbers	Reflector Angle	ENERGY STAR Numbers	Brightness (lumens)
S9512	35 deg	S9505-35	860
S9513	45 deg	S9505-45	860
S9514	60 deg	S9505-60	860
S9515	95 deg	S9505-95	800

S9506 5/6" LED Housing – 13.5W, 4000K, 90CRI

Reflector Numbers	Reflector Angle	ENERGY STAR Numbers	Brightness (lumens)
S9512	35 deg	S9506-35	900
S9513	45 deg	S9506-45	900
S9514	60 deg	S9506-60	900
S9515	95 deg	S9506-95	860

S9507 5/6" LED Housing – 13.5W, 5000K, 80CRI

Reflector Numbers	Reflector Angle	ENERGY STAR Numbers	Brightness (lumens)
S9512	35 deg	S9507-35	1000
S9513	45 deg	S9507-45	1000
S9514	60 deg	S9507-60	1000
S9515	95 deg	S9507-95	960

S9525 5/6" LED Housing – 13.5W, 2200K-2700K, 83CRI

Reflector Numbers	Reflector Angle	ENERGY STAR Numbers†	Brightness @ 2700K (lumens)†
S9512	35 deg	S9525-35	830
S9513	45 deg	S9525-45	830
S9514	60 deg	S9525-60	830
S9515	95 deg	S9525-95	760

†ENERGY STAR rating relates to 2700K CCT setting only

S9512 5"/6" Reflector – 35° Beam angle

Beam angle

35°

Beam Profile

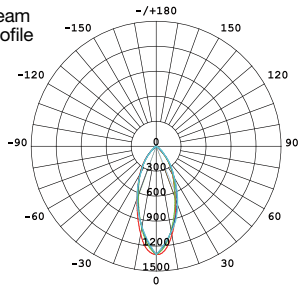

S9513 5"/6" Reflector – 45° Beam angle

Beam angle

45°

Beam Profile

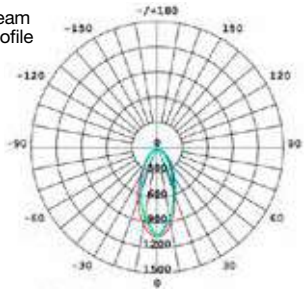

S9514 5"/6" Reflector – 60° Beam angle

Beam angle

60°

Beam Profile

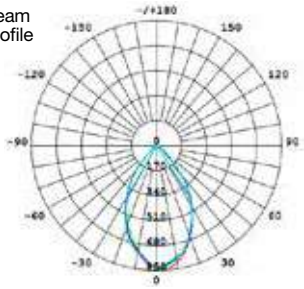

S9515 5"/6" Reflector – 95° Beam angle

Beam angle

95°

Beam Profile

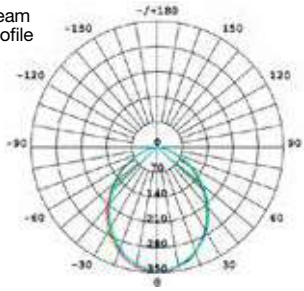

4" High Lumen LED housings and reflectors

Available recessed cans pg. 114

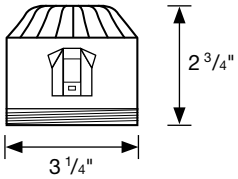

S9785 4" LED Housing – 16W, 2700K, 90CRI

Reflector Numbers	Reflector Angle	ENERGY STAR Numbers	Brightness (lumens)
S9508	30 deg	S9785-30	930
S9509	40 deg	S9785-40	930
S9510	60 deg	S9785-60	930
S9511	95 deg	S9785-95	880

S9786 4" LED Housing – 16W, 3000K, 90CRI

Reflector Numbers	Reflector Angle	ENERGY STAR Numbers	Brightness (lumens)
S9508	30 deg	S9786-30	940
S9509	40 deg	S9786-40	940
S9510	60 deg	S9786-60	940
S9511	95 deg	S9786-95	890

S9787 4" LED Housing – 16W, 4000K, 90CRI

Reflector Numbers	Reflector Angle	ENERGY STAR Numbers	Brightness (lumens)
S9508	30 deg	S9787-30	950
S9509	40 deg	S9787-40	950
S9510	60 deg	S9787-60	950
S9511	95 deg	S9787-95	900

S9788 4" LED Housing – 16W, 5000K, 80CRI

Reflector Numbers	Reflector Angle	ENERGY STAR Numbers	Brightness (lumens)
S9508	30 deg	S9788-30	1050
S9509	40 deg	S9788-40	1050
S9510	60 deg	S9788-60	1050
S9511	95 deg	S9788-95	1000

S9789 4" LED Housing – 16W, 2700K-2200K, 80CRI

Reflector Numbers	Reflector Angle	ENERGY STAR Numbers†	Brightness @ 2700K (lumens)†
S9508	30 deg	S9789-30	940
S9509	40 deg	S9789-40	940
S9510	60 deg	S9789-60	940
S9511	95 deg	S9789-95	890

†ENERGY STAR rating relates to 2700K CCT setting only

S9508 4" Reflector – 30° Beam angle

Beam angle

30°

Beam Profile

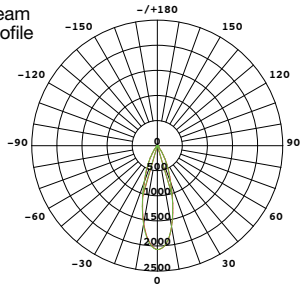

S9509 4" Reflector – 40° Beam angle

Beam angle

40°

Beam Profile

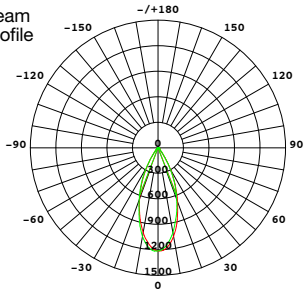

S9510 4" Reflector – 60° Beam angle

Beam angle

60°

Beam Profile

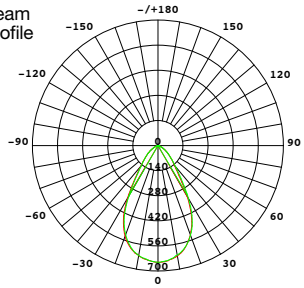

S9511 4" Reflector – 95° Beam angle

Beam angle

95°

Beam Profile

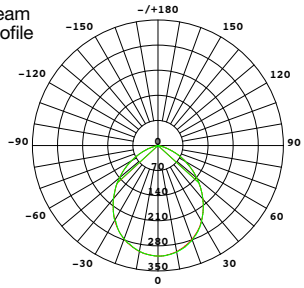

Round trims

4" Trims

White
S9516 4"

Brushed Nickel
S9517 4"

Bronze
S9518 4"

Polished Nickel
S9519 4"

4" Round

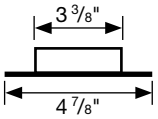

5"/6" Trims

White
S9520 5", S9554 6"

Brushed Nickel
S9521 5", S9555 6"

Bronze
S9522 5", S9556 6"

Polished Nickel
S9523 5", S9557 6"

5" Round

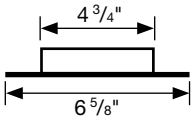

6" Round

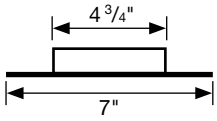

6" Round Adjustable Gimbal Trims

White
S9646 6"

Brushed Nickel
S9647 6"

Bronze
S9648 6"

Polished Nickel
S9649 6"

6" Round Gimbal

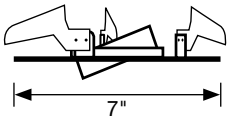

Square trims

4" Trims

White
S9526 4"

Brushed Nickel
S9527 4"

Bronze
S9528 4"

Polished Nickel
S9529 4"

4" Square

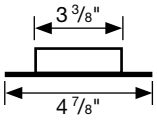

5" Square

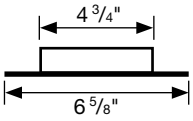

5"/6" Trims

White
S9530 5", S9534 6"

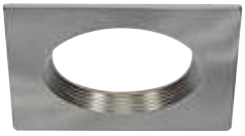

Brushed Nickel
S9531 5", S9535 6"

Bronze
S9532 5", S9536 6"

Polished Nickel
S9533 5", S9537 6"

6" Square

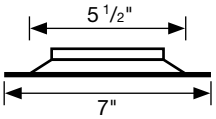

6" Square Adjustable Gimbal Trims

White
S9693 6"

Brushed Nickel
S9694 6"

Bronze
S9695 6"

Polished Nickel
S9696 6"

6" Square Gimbal

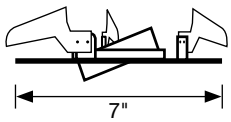

Item Number	Finish	UPC	Pk./ Mstr.
ROUND TRIMS			
4" ROUND TRIMS - For use in 4" new work and remodel housings			
S9516	White	045923095160	12/1
S9517	Brushed Nickel	045923095177	12/1
S9518	Bronze	045923095184	12/1
S9519	Polished Nickel	045923095191	12/1
5" ROUND TRIMS - For use in 5" new work and remodel housings or 6" new work housings			
S9520	White	045923095207	12/1
S9521	Brushed Nickel	045923095214	12/1
S9522	Bronze	045923095221	12/1
S9523	Polished Nickel	045923095238	12/1
6" ROUND TRIMS - For use in 6" new work and remodel housings			
S9554	White	045923095542	12/1
S9555	Brushed Nickel	045923095559	12/1
S9556	Bronze	045923095566	12/1
S9557	Polished Nickel	045923095573	12/1
GIMBAL TRIMS - For use with 4" LED high lumen housings only - S9785, S9786, S9787, S9788 and S9789			
6" ROUND ADJUSTABLE GIMBAL TRIMS - Gimbal trims can only be used in 6" new work or remodel cans			
S9646	White	045923096464	12/1
S9647	Brushed Nickel	045923096471	12/1
S9648	Bronze	045923096488	12/1
S9649	Polished Nickel	045923096495	12/1
SQUARE TRIMS			
4" SQUARE TRIMS - For use in 4" new work and remodel housings			
S9526	White	045923095269	12/1
S9527	Brushed Nickel	045923095276	12/1
S9528	Bronze	045923095283	12/1
S9529	Polished Nickel	045923095290	12/1
5" SQUARE TRIMS - For use in 5" new work and remodel housings or 6" new work housings			
S9530	White	045923095306	12/1
S9531	Brushed Nickel	045923095313	12/1
S9532	Bronze	045923095320	12/1
S9533	Polished Nickel	045923095337	12/1
6" SQUARE TRIMS - For use in 6" new work and remodel housings			
S9534	White	045923095344	12/1
S9535	Brushed Nickel	045923095351	12/1
S9536	Bronze	045923095368	12/1
S9537	Polished Nickel	045923095375	12/1
GIMBAL TRIMS - For use with 4" LED high lumen housings only - S9785, S9786, S9787, S9788 and S9789			
6" SQUARE ADJUSTABLE GIMBAL TRIMS - Gimbal trims can only be used in 6" new work or remodel cans			
S9693	White	045923096938	12/1
S9694	Brushed Nickel	045923096945	12/1
S9695	Bronze	045923096952	12/1
S9696	Polished Nickel	045923096969	12/1

4" LED recessed downlight retrofits

4" Downlight Gimbal

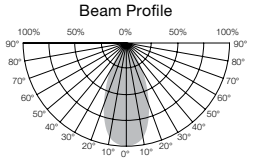

Beam Angle: 40°

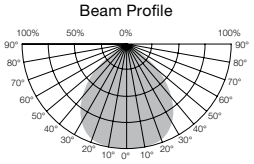

Beam Angle: 90°

Illumination

	40°	90°
1m	1150 lx in Center	360 lx in Center
2m	285 lx in Center	90 lx in Center

4" Downlight Baffle

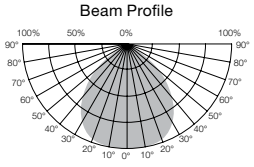

Beam Angle: 90°

Illumination

1m	345 lx in Center
2m	90 lx in Center

Beam Angle: 90°

Applications

- Residential
- Office
- Retail
- Hospitality

Features

- Solid state LED lighting
- Direct replacement for reflector lamps
- Dimmable
- Long life—50,000 hours
- 5 Year warranty
- c-UL-us damp location classified - Gimbal
- c-UL-us wet location listed - Baffle
- ENERGY STAR® certified*

E26 Adapter included (S9001)
GU10 Adapter sold separately (S9000)

Available recessed cans pg. 114

DIMMABLE | DAMP LOCATION Gimbal | WET LOCATION Baffle | * ENERGY STAR

4" LED Recessed Downlight Retrofits

Item Number	Lamp Description	W	V	CRI	CCT	Lm	Bm	M.O.L. (Inches)	Life/ Hrs.	UPC	Pack
4" LED Baffle Retrofits											
S29713*	8.5WLED/RDL/4"/27K/120V	8.5	120	90	2700K	600	90°	2 7/8	50K	045923297137	16/1
S29714*	8.5WLED/RDL/4"/30K/120V	8.5	120	90	3000K	600	90°	2 7/8	50K	045923297144	16/1
S9744	8.5WLED/RDL/4/30K/BN/120V (Brushed Nickel)	8.5	120	90	3000K	600	90°	2 7/8	50K	045923097447	16/1
S29715*	8.5WLED/RDL/4"/40K/120V	8.5	120	90	4000K	630	90°	2 7/8	50K	045923297151	16/1
S29716*	8.5WLED/RDL/4"/50K/120V	8.5	120	90	5000K	630	90°	2 7/8	50K	045923297168	16/1
4" LED Gimbal Retrofits											
S29463*	9WLED/DIR/4/40'/27K/120V	9	120	90	2700K	600	40°	3 5/16	50K	045923294631	8/1
S29464*	9WLED/DIR/4/40'/30K/120V	9	120	90	3000K	600	40°	3 5/16	50K	045923294648	8/1
S29465*	9WLED/DIR/4/40'/40K/120V	9	120	90	4000K	600	40°	3 5/16	50K	045923294655	8/1
S29466*	9WLED/DIR/4/90'/27K/120V	9	120	90	2700K	600	90°	3 5/16	50K	045923294662	8/1
S29467*	9WLED/DIR/4/90'/30K/120V	9	120	90	3000K	600	90°	3 5/16	50K	045923294679	8/1
S29468*	9WLED/DIR/4/90'/40K/120V	9	120	90	4000K	600	90°	3 5/16	50K	045923294686	8/1

5", 6" LED recessed downlight retrofits

Applications

- Residential
- Office
- Retail
- Hospitality

Features

- Solid state LED lighting
- Direct replacement for reflector lamps
- Dimmable
- Long life—50,000 hours
- High efficiency/ Environmentally friendly
- 5 Year warranty
- c-UL-us damp location classified - Gimbal
- c-UL-us wet location listed - Baffle
- ENERGY STAR® certified*

E26 Adapter included (S9001)
GU24 Adapter sold separately (S8999)
GU10 Adapter sold separately (S9000)

Pressure bracket (80-2676)
alternate installation option available.

Available recessed cans pg. 114

5"/6" Downlight Gimbal

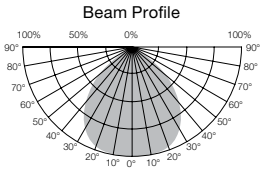

Beam Angle: 90°

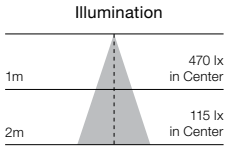

Beam Angle: 90°

5"/6" Downlight Baffle

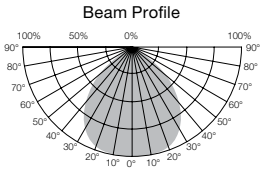

Beam Angle: 90°

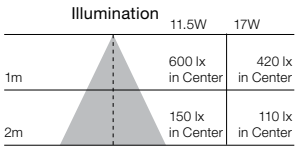

Beam Angle: 90°

DIMMABLE | DAMP LOCATION Gimbal | WET LOCATION Baffle | * ENERGY STAR

5"/6" LED Recessed Downlight Retrofits

Item Number	Lamp Description	W	V	CRI	CCT	Lm	Bm	M.O.L. (Inches)	Life/ Hrs.	UPC	Pack
5"/6" LED Baffle Retrofits											
S29724*	10.5WLED/RDL/5"-6"/27K/120V	10.5	120	90	2700K	800	90°	3 7/16	50K	045923297243	8/1
S29725*	10.5WLED/RDL/5"-6"/30K/120V	10.5	120	90	3000K	800	90°	3 7/16	50K	045923297250	8/1
S9745	10.5WLED/RDL/5-6/30K/BN/120V (Brushed Nickel)	10.5	120	90	3000K	800	90°	3 7/16	50K	045923097454	8/1
S29726*	10.5WLED/RDL/5"-6"/40K/120V	10.5	120	90	4000K	840	90°	3 7/16	50K	045923297267	8/1
S29727*	10.5WLED/RDL/5"-6"/50K/120V	10.5	120	90	5000K	840	90°	3 7/16	50K	045923297274	8/1
S29740*	15.5WLED/RDL/5"-6"/27K/120V	15.5	120	90	2700K	1200	90°	3 7/16	50K	045923297403	8/1
S29741*	15.5WLED/RDL/5"-6"/30K/120V	15.5	120	90	3000K	1200	90°	3 7/16	50K	045923297410	8/1
S29742*	15.5WLED/RDL/5"-6"/40K/120V	15.5	120	90	4000K	1260	90°	3 7/16	50K	045923297427	8/1
S29743*	15.5WLED/RDL/5"-6"/50K/120V	15.5	120	90	5000K	1260	90°	3 7/16	50K	045923297434	8/1
5"/6" LED Gimbal Retrofits											
S29472*	12WLED/DIR/5"-6"/27K/120V	12	120	90	2700K	800	90°	4 1/4	50K	045923094729	8/1
S29473*	12WLED/DIR/5"-6"/30K/120V	12	120	90	3000K	800	90°	4 1/4	50K	045923094736	8/1
S29474*	12WLED/DIR/5"-6"/40K/120V	12	120	90	4000K	840	90°	4 1/4	50K	045923094743	8/1

Satco Value series 5"/6" LED recessed downlight retrofits

Applications

- Residential
- Office
- Retail
- Hospitality

Features

- Solid state LED lighting
- Made of durable polymer
- Direct replacement for reflector lamps
- Dimmable**
- Long life—35,000 hours
- High efficiency/environmentally friendly
- c-UL-us classified
- Wet location
- 5 Year warranty***
- ENERGY STAR certified*

E26 Adapter included

Available recessed cans pg. 114

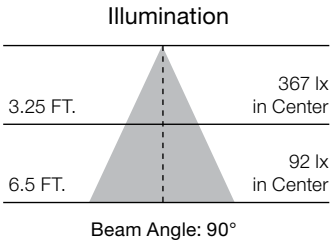

5"/6" LED Recessed Downlight Retrofits

Item Number	Lamp Description	W	V	CRI	CCT	Lm	Bm	M.O.L. (Inches)	Life/ Hrs.	UPC	Pack/ Master
S29312*	9.8WLED/RDL/5-6/27K/120V	9.8	120	90	2700K	650	90°	2 5/16	35K	045923293122	12/1
S29313*	9.8WLED/RDL/5-6/30K/120V	9.8	120	90	3000K	650	90°	2 5/16	35K	045923293139	12/1
S29314*	9.8WLED/RDL/5-6/40K/120V	9.8	120	90	4000K	650	90°	2 5/16	35K	045923293146	12/1
S29315*	9.8WLED/RDL/5-6/50K/120V	9.8	120	90	5000K	650	90°	2 5/16	35K	045923293153	12/1

**Consult Satco or visit www.satco.com for an up to date dimmer compatibility list. ***See separate warranty for complete terms and conditions.

Quick Trim™ 4", 5"/6" LED recessed downlight retrofit 2-packs

Beam Profile

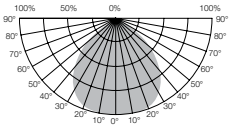

Beam Angle: 115°

Illumination	4"	5"-6"
1m	340 lx in Center	420 lx in Center
2m	85 lx in Center	100 lx in Center

Beam Angle: 115°

Innovative design– adjustable neck makes installation into any recessed can easy.

Applications

- Residential
- Office
- Retail
- Hospitality

Features

- Direct replacement for reflector lamps
- Dimmable**
- Long life—25,000 hours
- Damp location
- 5 Year warranty***
- ENERGY STAR certified*

Available recessed cans pg. 114

Extends to reach the socket.
Retracts to meet the surface.

Step 1

Screw lamp into existing socket.

Step 2

Push into the fixture until the trim is flush against surface.

LED Recessed Downlight Retrofit 2-Packs

** DIMMABLE DAMP LOCATION * ENERGY STAR

Item Number	Lamp Description	W	V	CRI	CCT	Lm	Bm	M.O.L. (Inches)	Life/ Hrs.	UPC	Pack
S9598*	8.5WLED/4"TRIM/27K/120V/2PK	8.5	120	80	2700K	510	115°	3 1/16" - 5 3/8"	25K	045923095986	12-2pks
S9599*	12WLED/5-6"TRIM/27K/120V/2PK	12	120	80	2700K	800	110°	4 1/2"- 6 5/16"	25K	045923095993	12-2pks

**Consult Satco or visit www.satco.com for an up to date dimmer compatibility list. ***See separate warranty for complete terms and conditions.

4" LED square trim recessed downlight retrofits

Applications

- Residential
- Office
- Retail
- Hospitality

Features

- 45 Watt replacement uses only 10 Watts
- Direct replacement for reflector lamps
- Dimmable**
- Long life—50,000 hours
- Durable die-cast finish
- c-UL-us classified
- Wet location
- 5 Year warranty
- ENERGY STAR certified*

Illumination

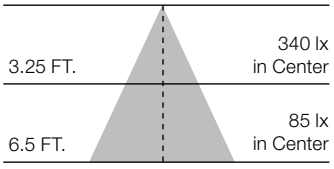

Beam Angle: 90°

E26 Adapter included (S9001)
GU24 Adapter sold separately (S8999)
GU10 Adapter sold separately (S9000)
Fits in round cans

Available recessed cans pg. 114

4" LED Square Trim Recessed Downlight Retrofits

** DIMMABLE WET LOCATION * ENERGY STAR

Item Number	Lamp Description	W	V	CRI	CCT	Lm	Bm	M.O.L. (Inches)	Life/ Hrs.	UPC	Pack
S29756*	9WLED/4/SQ/27K/120V	9	120	90	2700K	600	90°	4	50K	045923297564	24/1
S29757*	9WLED/4/SQ/30K/120V	9	120	90	3000K	600	90°	4	50K	045923297571	24/1
S29758*	9WLED/4/SQ/40K/120V	9	120	90	4000K	600	90°	4	50K	045923297588	24/1
S29759*	9WLED/4/SQ/50K/120V	9	120	90	5000K	600	90°	4	50K	045923297595	24/1

**Consult Satco or visit www.satco.com for an up to date dimmer compatibility list.

5"/6" LED square trim recessed downlight retrofits

Applications

- Residential
- Office
- Retail
- Hospitality

Features

- Up to 85 Watt replacement uses only 16 Watts
- Direct replacement for reflector lamps
- Dimmable**
- Long life—50,000 hours
- Durable die-cast finish
- c-UL-us classified
- Wet location
- 5 Year warranty
- ENERGY STAR certified*

Illumination

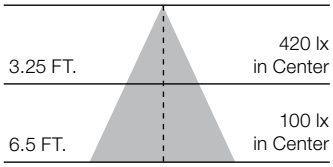

Beam Angle: 90°

E26 Adapter included (S9001)
GU24 Adapter sold separately (S8999)
GU10 Adapter sold separately (S9000)
Fits in round cans

Available recessed cans pg. 114

5"/6" LED Square Trim Recessed Downlight Retrofits

** DIMMABLE WET LOCATION * ENERGY STAR

Item Number	Lamp Description	W	V	CRI	CCT	Lm	Bm	M.O.L. (Inches)	Life/ Hrs.	UPC	Pack
S29770*	15WLED/5-6/SQ/27K/120V	15	120	90	2700K	1000	90°	5-6	50K	045923297700	12/1
S29771*	15WLED/5-6/SQ/30K/120V	15	120	90	3000K	1000	90°	5-6	50K	045923297717	12/1
S29772*	15WLED/5-6/SQ/40K/120V	15	120	90	4000K	1000	90°	5-6	50K	045923297724	12/1
S29773*	15WLED/5-6/SQ/50K/120V	15	120	90	5000K	1000	90°	5-6	50K	045923297731	12/1

**Consult Satco or visit www.satco.com for an up to date dimmer compatibility list.

4" LED direct wire edge-lit downlights

Top view

1 3/4"

4 3/4"

Applications

- Residential
- Office
- Retail
- Hospitality
- Drop ceilings
- Remodeling

Features

- Direct replacement for 45 Watt reflector lamps uses only 8.5 Watts
- Edge-lit technology
- Slim design
- Integrated j-box for direct wire installation saves time and materials
- Dimmable*
- Long life—40,000 hours
- c-UL-us classified
- Damp location
- 5 Year warranty**

Highlights

- Easy install spring clips
- IC rated
- Low profile
- No recessed can required

Illumination

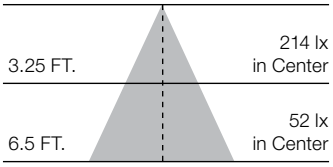

Beam Angle: 100°

Available recessed cans pg. 114

4" LED Direct Wire Edge-Lit Downlights

DIMMABLE DAMP LOCATION * ENERGY STAR

Item Number	Lamp Description	W	V	CRI	CCT	Lm	Bm	M.O.L. (Inches)	Life/ Hrs.	UPC	Pack
S29055*	8.5WLED/DW/EL/4/27K/120V	8.5	120	83	2700K	500	100°	1 ¾	40K	045923200014	12/1
S29056*	8.5WLED/DW/EL/4/30K/120V	8.5	120	83	3000K	500	100°	1 ¾	40K	045923290565	12/1
S29057*	8.5WLED/DW/EL/4/40K/120V	8.5	120	83	4000K	500	100°	1 ¾	40K	045923290572	12/1
S29058*	8.5WLED/DW/EL/4/50K/120V	8.5	120	83	5000K	500	100°	1 ¾	40K	045923290589	12/1

*Consult Satco or visit www.satco.com for an up to date dimmer compatibility list. **See separate warranty for complete terms and conditions.

5"/6" LED direct wire edge-lit downlights

Applications

- Residential
- Office
- Retail
- Hospitality
- Drop ceilings
- Remodeling

Features

- Direct replacement for 65 Watt reflector lamps uses only 11.6 Watts
- Edge-lit technology
- Slim design
- Integrated j-box for direct wire installation saves time and materials
- Dimmable*
- Long life—40,000 hours
- c-UL-us classified
- Damp location
- 5 Year warranty**

Highlights

- Easy install spring clips
- IC rated
- Low profile
- No recessed can required

Illumination

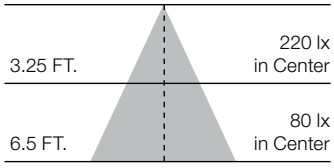

Beam Angle: 100°

Available recessed cans pg. 114

5"/6" LED Direct Wire Edge-Lit Downlights

Item Number	Lamp Description	W	V	CRI	CCT	Lm	Bm	M.O.L. (Inches)	Life/ Hrs.	UPC	Pack
S29061*	11.6WLED/DW/EL/5-6/27K/120V	11.6	120	83	2700K	800	100°	1 ¾	40K	045923290619	12/1
S29062*	11.6WLED/DW/EL/5-6/30K/120V	11.6	120	83	3000K	800	100°	1 ¾	40K	045923290626	12/1
S29063*	11.6WLED/DW/EL/5-6/40K/120V	11.6	120	83	4000K	800	100°	1 ¾	40K	045923290633	12/1
S29059*	11.6WLED/DW/EL/5-6/50K/120V	11.6	120	83	5000K	800	100°	1 ¾	40K	045923290596	12/1

*Consult Satco or visit www.satco.com for an up to date dimmer compatibility list. **See separate warranty for complete terms and conditions.

4" LED direct wire downlights

Applications

- Residential
- Office
- Retail
- Hospitality
- Drop ceilings
- Remodeling

Features

- Direct replacement for 45 Watt reflector lamps uses only 7 Watts
- Integrated j-box for direct wire installation saves time and materials
- Dimmable**
- Long life—40,000 hours
- c-UL-us classified
- Wet location
- 5 Year warranty***
- ENERGY STAR certified*

Highlights

- Easy install spring clips
- IC rated
- Low profile
- No recessed can required

Illumination

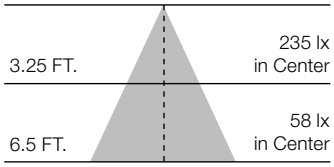

Beam Angle: 100°

Available recessed cans pg. 114

4" LED Direct Wire Downlights

DIMMABLE WET LOCATION * ENERGY STAR

Item Number	Lamp Description	W	V	CRI	CCT	Lm	Bm	M.O.L. (Inches)	Life/ Hrs.	UPC	Pack
S29011*	7WLED/DW/RDL/4/27K/120V	7	120	83	2700K	550	100°	3 ¼	40K	045923290114	12/1
S29012*	7WLED/DW/RDL/4/30K/120V	7	120	83	3000K	550	100°	3 ¼	40K	045923290121	12/1
S29013*	7WLED/DW/RDL/4/40K/120V	7	120	83	4000K	550	100°	3 ¼	40K	045923290138	12/1
S29021*	7WLED/DW/RDL/4/50K/120V	7	120	83	5000K	550	100°	3 ¼	40K	045923290213	12/1

*Consult Satco or visit www.satco.com for an up to date dimmer compatibility list. **See separate warranty for complete terms and conditions.

5"/6" LED direct wire downlights

Applications

- Residential
- Office
- Retail
- Hospitality
- Drop ceilings
- Remodeling

Features

- Direct replacement for 65 Watt reflector lamps uses only 9 Watts
- Integrated j-box for direct wire installation saves time and materials
- Dimmable**
- Long life—40,000 hours
- c-UL-us classified
- Wet location
- 5 Year warranty***
- ENERGY STAR certified*

Highlights

- Easy install spring clips
- IC rated
- Low profile
- No recessed can required

Illumination

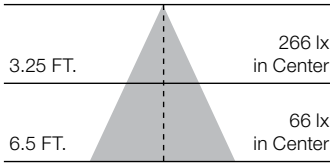

Beam Angle: 100°

Available recessed cans pg. 114

DIMMABLE WET LOCATION *ENERGY STAR

5"/6" LED Direct Wire Downlights

Item Number	Lamp Description	W	V	CRI	CCT	Lm	Bm	M.O.L. (Inches)	Life/ Hrs.	UPC	Pack
S29026*	9WLED/DW/RDL/5-6/27K/120V	9	120	83	2700K	700	100°	3 ⅝	40K	045923090264	12/1
S29027*	9WLED/DW/RDL/5-6/30K/120V	9	120	83	3000K	700	100°	3 ⅝	40K	045923090271	12/1
S29028*	9WLED/DW/RDL/5-6/40K/120V	9	120	83	4000K	700	100°	3 ⅝	40K	045923090288	12/1
S29029*	9WLED/DW/RDL/5-6/50K/120V	9	120	83	5000K	700	100°	3 ⅝	40K	045923290299	12/1

Commercial LED downlights

Applications

- Residential/commercial
- Office
- Retail
- Hospitality
- Manufacturing
- Municipal/government

Features

- Direct replacements for incandescent, Halogen and CFL technologies
- 4" Replaces up to 2x18 Watt CFLs using only 15 Watts
- 6" Replaces up to 2x26 Watt CFLs using only 25 Watts
- 8" Replaces up to 2x32 Watt CFLs or MH70 using only 35 Watts
- 10" Replaces up to 2x42 Watt CFLs or MH70 using only 50 Watts
- External driver for simple retrofitting
- Quick connect for easy installation
- 100-277 Input voltage
- 0-10V Dimming to 10%*
- 90 CRI
- Damp location
- cULus listed
- ENERGY STAR certified
- 5 Year warranty
- IC rated

4" shown in Frame-In Kit

Set of 3 retaining clips included.

Installs into existing frame-in kit.

Commercial LED Recessed Downlights

Item Number	Lamp Description	W	V	CRI	CCT	LM	BM	MOL	Life/ Hrs.	UPC
S8705	15WLED/CDL/4"/4K/120-277	15	100-277	90	4000	1020	40°	7.28	50000	045923087059
S8706	25WLED/CDL/6"/4K/120-277	25	100-277	90	4000	1750	40°	7.48	50000	045923087066
S8707	35WLED/CDL/8"/4K/120-277	35	100-277	90	4000	2450	40°	8.66	50000	045923087073
S8708	50WLED/CDL/10"/4K/120-277	50	100-277	90	4000	3500	40°	9.25	50000	045923087080

*Visit www.satco.com for 0-10V dimmer compatibility

Pack: Master 4/1

RECESSED LED DOWNLIGHTS

5"/6" LED Recessed Baffle Downlight Retrofits

Item Number	W	CRI	CCT	Lm	Bm	Pk.
S29740*	15.5	90	2700K	1200	90°	8/1
S29741*	15.5	90	3000K	1200	90°	8/1
S29742*	15.5	90	4000K	1260	90°	8/1
S29743*	15.5	90	5000K	1260	90°	8/1

Reg. ~~$10.95~~ea. **$9.95ea.**

DIMMABLE | WET LOCATION | * ENERGY STAR

4", 6", 8" & 10" 4000K Commercial Recessed LED Downlights

Item Number	W	In	CCT	Lm	Bm	Pk.	Reg.	Each
S8705*	15	4”	4000K	1020	40°	4/1	$45.95	$39.95
S8706*	15	6”	4000K	1900	40°	4/1	$56.95	$49.95
S8707*	15	8”	4000K	2800	40°	4/1	$62.95	$56.95
S8708*	15	10”	4000K	4000	40°	4/1	$82.95	$74.95

90 CRI | 0-10V DIMMING | DAMP LOCATION | * ENERGY STAR

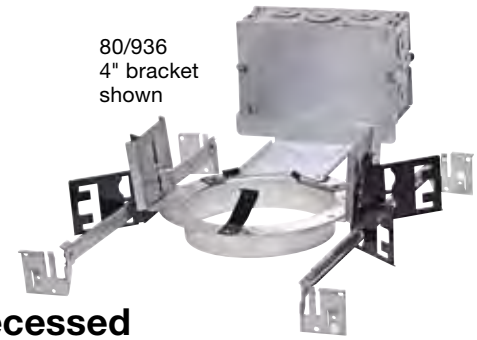

80/936
4" bracket
shown

Commercial LED Recessed Downlight Brackets – Priced per 2pk

RoHS COMPLIANT | c UL us

Item Number	Description	UPC	Pack	2pk
80/936	MOUNT. PLATE/BARS 4" C-RDL/2PK	045923809361	4 – 2pks	$29.95
80/937	MOUNT. PLATE/BARS 6" C-RDL/2PK	045923809378	4 – 2pks	$31.95
80/938	MOUNT. PLATE/BARS 8" C-RDL/2PK	045923809385	4 – 2pks	$33.95
80/939	MOUNT. PLATE/BARS 10" C-RDL/2PK	045923809392	4 – 2pks	$35.95

Pack: Master 4/2

Spectral Distribution, 4000K

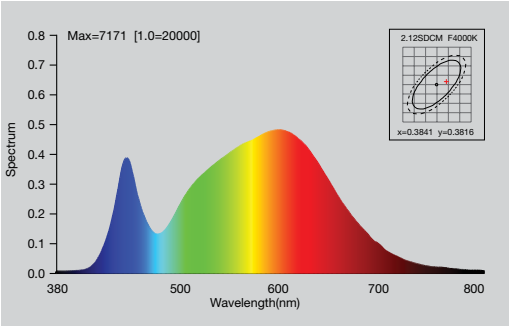

Luminous intensity distribution

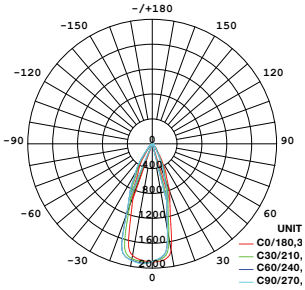

AVERAGE BEAM ANGLE(50%):37.0 DEG

Typical representation – 4" shown

Planar illuminance curve

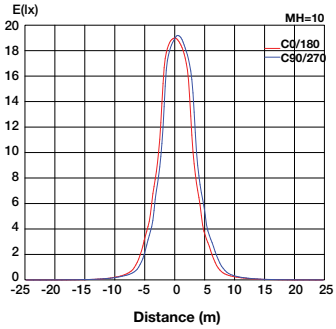

Typical representation – 4" shown

Beam diagram

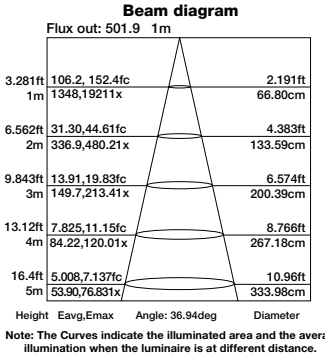

Note: The Curves indicate the illuminated area and the avera illumination when the luminaire is at different distance.

Typical representation – 4" shown

Dimensions

S8705 - 4"

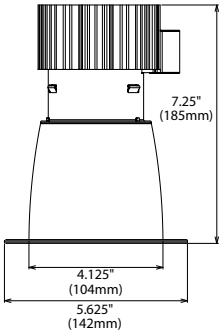

S8706 - 6"

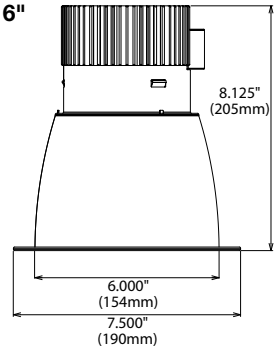

S8707 - 8"

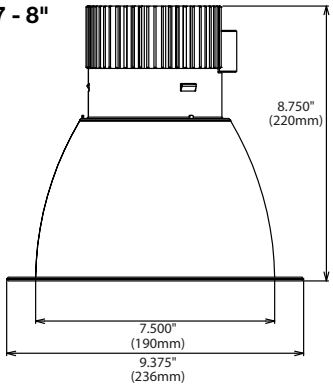

S8708 - 10"

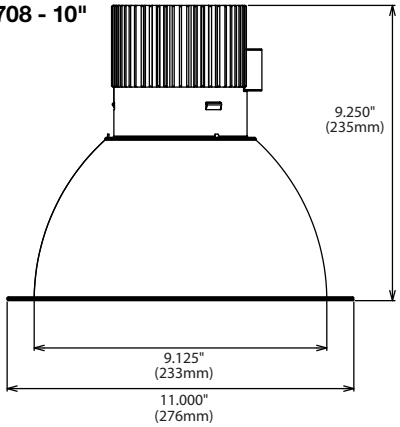

Commercial LED downlight Frame-In Kits

Applications

- Residential/commercial
- Office
- Retail
- Hospitality

Features

- 14"-25" Adjustable arms
- Integrated J-box
- Rugged construction
- Wood joist of T-bar installation
- Suitable for new construction in commercial applications
- Overall structure is made of galvanized sheet, fire-proof and heat resistant
- The junction box is detachable for easy wiring
- 4", 6", 8", 10"
- 2 sets extended bars provided for the for the bracket, could be extended and shortened within 12-3/4" - 24"
- There are four 7/8" knockouts with slots for pryouts for connections on the junction box
- Spare knockouts with slots: Two 1-1/8", another two 9/16" on the left size
- No. 18 AWG ground wire is provided on the bracket

80/936
4" Frame-In Kit

80/939
10" Frame-In Kit

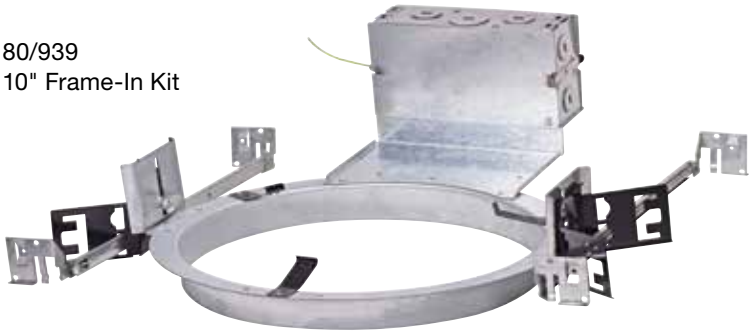

Commercial LED Recessed Downlight Brackets

Item Number	Description	UPC	Pack
80/936	MOUNT. PLATE/BARS 4" C-RDL/2PK	045923809361	2pk
80/937	MOUNT. PLATE/BARS 6" C-RDL/2PK	045923809378	2pk
80/938	MOUNT. PLATE/BARS 8" C-RDL/2PK	045923809385	2pk
80/939	MOUNT. PLATE/BARS 10" C-RDL/2PK	045923809392	2pk

Pack: Master 4/2

Product Dimensions

80-936 - 4"

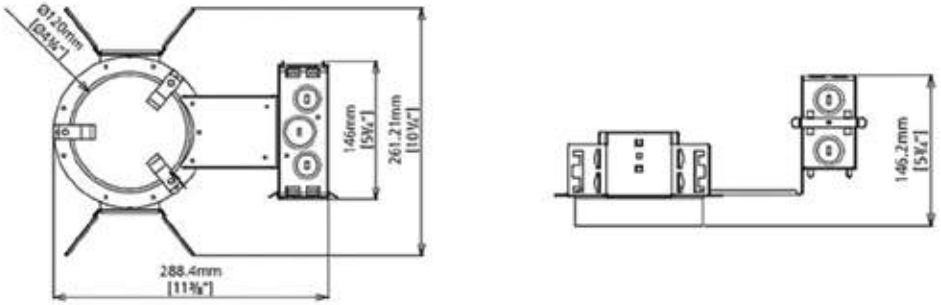

80-937 - 6"

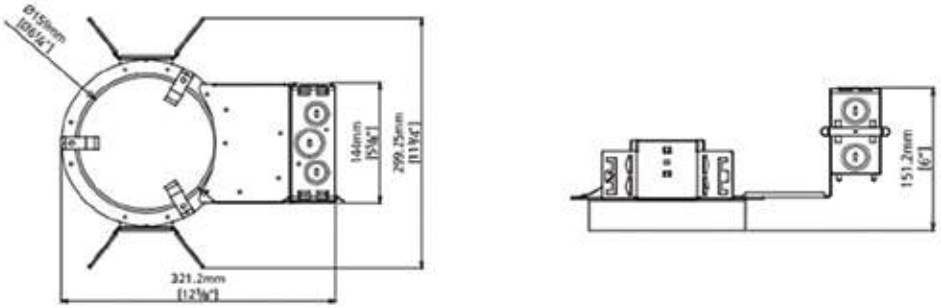

80-938 - 8"

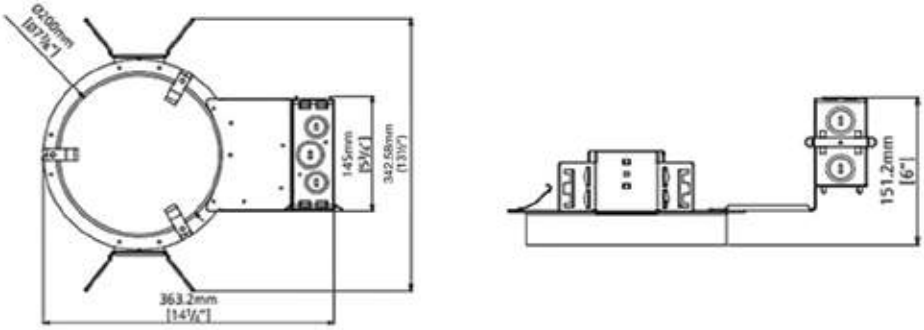

80-939 - 10"

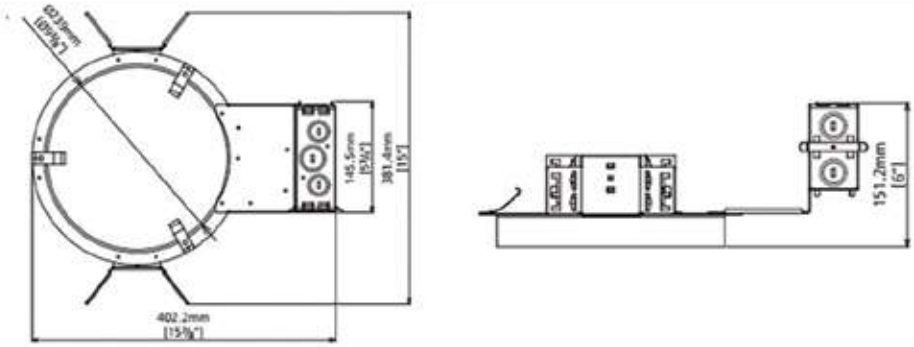

LED ready recessed can assemblies

Air-tight rated.

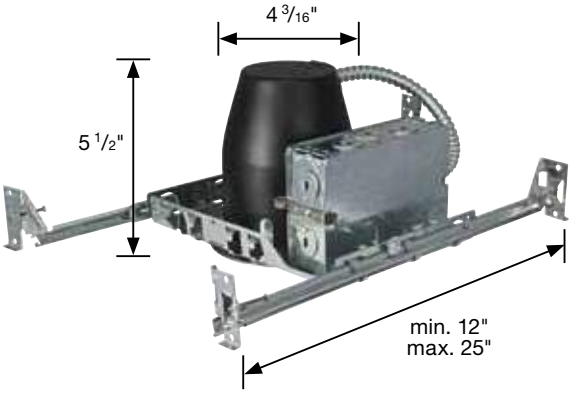

S9538 4" Can – New Construction
- For 120V, 60Hz, 18W max.
- Suitable for wet and damp locations*
- For use only with UL or cUL classified LED or equivalent
- IC Rated

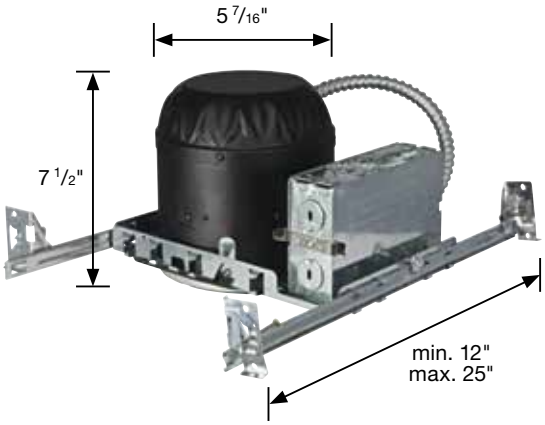

S9540 5/6" Can – New Construction
- For 120V, 60Hz, 24W max.
- Suitable for wet and damp locations*
- For use only with UL or cUL classified LED or equivalent
- IC Rated

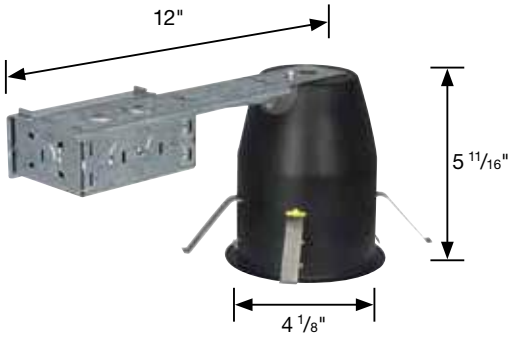

S9539 4" Can – Remodel
- For 120V, 60Hz, 18W max.
- Suitable for wet and damp locations*
- For use only with UL or cUL classified LED or equivalent
- IC Rated

S9541 5/6" Can – Remodel
- For 120V, 60Hz, 24W max.
- Suitable for wet and damp locations*
- For use only with UL or cUL classified LED or equivalent
- IC Rated

Quick-connect plugs make installation even easier.

Compact. Efficient. Attractive.

Track lighting has come a long way, and Nuvo Lighting has been a leader in change. Our LED track heads, track lighting kits and accessories are beautiful and functional. A choice of finishes, shapes, clean, sleek design and of course the efficiency of LED technology come together to create a complete track lighting package suitable for even the most challenging commercial and residential applications.

LED track lighting makes challenging projects easy.

LED track heads

LED efficiency, high quality and great value.

Features

- Direct replacement for 75 Watt incandescent uses only 12 Watts
- 24˚ and 36˚ beam angles
- Dimmable
- 3000K
- 90+ CRI
- 820 lumens
- Long life—30,000 Hours
- Sleek, clean design
- Die cast construction
- 3 Year warranty

Round

TH401 White, 24°
TH403 White, 36°
TH402 Black, 24°
TH404 Black, 36°
TH405 Brushed Nickel, 24°
TH407 Brushed Nickel, 36°
Dimensions: Width 3", Height 2 1/4", Ext. 5 1/8"

Pinch Back

TH411 White, 24°
TH413 White, 36°
TH412 Black, 24°
TH414 Black, 36°
TH415 Brushed Nickel, 24°
TH417 Brushed Nickel, 36°
Dimensions: Width 2 3/4", Height 2 3/4", Ext. 5 5/8"

Angle Arm

TH421 White, 24°
TH423 White, 36°
TH422 Black, 24°
TH424 Black, 36°
TH425 Brushed Nickel, 24°
TH427 Brushed Nickel, 36°
Dimensions: Width 2 1/2", Height 2 3/8", Ext. 6 1/4"

LED Track Heads

12 WATTS | REPLACES 75W | DIMMABLE | 3000 K | 90 CRI | 30,000 HOURS

Item Number	Description	W	Lm	Beam	Finish	CCT	Life/ Hrs.	UPC	Pack
TH401	Round White 24˚ LED Track Head	12	820	24°	White	3000K	30K	045923404016	12/1
TH403	Round White 36˚ LED Track Head	12	820	36°	White	3000K	30K	045923404030	12/1
TH402	Round Black 24˚ LED Track Head	12	820	24°	Black	3000K	30K	045923404023	12/1
TH404	Round Black 36˚ LED Track Head	12	820	36°	Black	3000K	30K	045923404047	12/1
TH405	Round Brushed Nickel 24˚ LED Track Head	12	820	24°	Brushed Nickel	3000K	30K	045923404054	12/1
TH407	Round Brushed Nickel 36˚ LED Track Head	12	820	36°	Brushed Nickel	3000K	30K	045923404078	12/1
TH411	Pinch Back White 24˚ LED Track Head	12	820	24°	White	3000K	30K	045923404115	12/1
TH413	Pinch Back White 36˚ LED Track Head	12	820	36°	White	3000K	30K	045923404139	12/1
TH412	Pinch Back Black 24˚ LED Track Head	12	820	24°	Black	3000K	30K	045923404122	12/1
TH414	Pinch Back Black 36˚ LED Track Head	12	820	36°	Black	3000K	30K	045923404146	12/1
TH415	Pinch Back Brushed Nickel 24˚ LED Track Head	12	820	24°	Brushed Nickel	3000K	30K	045923404153	12/1
TH417	Pinch Back Brushed Nickel 36˚ LED Track Head	12	820	36°	Brushed Nickel	3000K	30K	045923404177	12/1
TH421	Angle Arm White 24˚ LED Track Head	12	820	24°	White	3000K	30K	045923404214	12/1
TH423	Angle Arm White 36˚ LED Track Head	12	820	36°	White	3000K	30K	045923404238	12/1
TH422	Angle Arm Black 24˚ LED Track Head	12	820	24°	Black	3000K	30K	045923404221	12/1
TH424	Angle Arm Black 36˚ LED Track Head	12	820	36°	Black	3000K	30K	045923404245	12/1
TH425	Angle Arm Brushed Nickel 24˚ LED Track Head	12	820	24°	Brushed Nickel	3000K	30K	045923404252	12/1
TH427	Angle Arm Brushed Nickel 36˚ LED Track Head	12	820	36°	Brushed Nickel	3000K	30K	045923404276	12/1
TH431	12W LED Track head - Barrel	12	820	24°	White	3000K	30K	045923404313	12/1
TH433	12W LED Track head - Barrel	12	820	36°	White	3000K	30K	045923404337	12/1
TH432	12W LED Track head - Barrel	12	820	24°	Black	3000K	30K	045923404320	12/1
TH434	12W LED Track head - Barrel	12	820	36°	Black	3000K	30K	045923404344	12/1
TH435	12W LED Track head - Barrel	12	820	24°	Brushed Nickel	3000K	30K	045923404351	12/1
TH437	12W LED Track head - Barrel	12	820	36°	Brushed Nickel	3000K	30K	045923404375	12/1

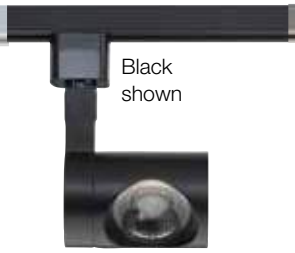

Barrel

TH431 White, 24°
TH433 White, 36°
TH432 Black, 24°
TH434 Black, 36°
TH435 Brushed Nickel, 24°
TH437 Brushed Nickel, 36°

Dimensions: Width 2 1/4", Height 3 1/4", Ext. 5"

Pipe

TH441 White, 24°
TH443 White, 36°
TH442 Black, 24°
TH444 Black, 36°
TH445 Brushed Nickel, 24°
TH447 Brushed Nickel, 36°

Dimensions: Width 2 3/8", Height 2 3/8", Ext. 5 3/16"

Taper Back

TH451 White, 24°
TH453 White, 36°
TH452 Black, 24°
TH454 Black, 36°
TH455 Brushed Nickel, 24°
TH457 Brushed Nickel, 36°

Dimensions: Width 2 13/16", Height 3 1/4", Ext. 5 1/4"

Square

TH461 White, 24°
TH463 White, 36°
TH462 Black, 24°
TH464 Black, 36°
TH465 Brushed Nickel, 24°
TH467 Brushed Nickel, 36°

Dimensions: Width 2 3/8", Height 2 3/4", Ext. 5 3/16"

Small Cylinder

TH471 White, 24°
TH473 White, 36°
TH472 Black, 24°
TH474 Black, 36°
TH475 Brushed Nickel, 24°
TH477 Brushed Nickel, 36°

Dimensions: Width 2 3/16", Height 3 1/2", Ext. 5 3/16"

12 WATTS | REPLACES 75W | DIMMABLE | 3000 K | 90 CRI | 30,000 HOURS

Item Number	Description	W	Lm	Beam	Finish	CCT	Life/ Hrs.	UPC	Pack
TH441	12W LED Track Head - Pipe	12	820	24°	White	3000K	30K	045923404412	12/1
TH443	12W LED Track Head - Pipe	12	820	36°	White	3000K	30K	045923404436	12/1
TH442	12W LED Track Head - Pipe	12	820	24°	Black	3000K	30K	045923404429	12/1
TH444	12W LED Track Head - Pipe	12	820	36°	Black	3000K	30K	045923404429	12/1
TH445	12W LED Track Head - Pipe	12	820	24°	Brushed Nickel	3000K	30K	045923404450	12/1
TH447	12W LED Track Head - Pipe	12	820	36°	Brushed Nickel	3000K	30K	045923404474	12/1
TH451	12W LED Track Head Taper Back	12	820	24°	White	3000K	30K	045923404511	12/1
TH453	12W LED Track Head Taper Back	12	820	36°	White	3000K	30K	045923404535	12/1
TH452	12W LED Track Head Taper Back	12	820	24°	Black	3000K	30K	045923404528	12/1
TH454	12W LED Track Head Taper Back	12	820	36°	Black	3000K	30K	045923404542	12/1
TH455	12W LED Track Head Taper Back	12	820	24°	Brushed Nickel	3000K	30K	045923404559	12/1
TH457	12W LED Track Head Taper Back	12	820	36°	Brushed Nickel	3000K	30K	045923404573	12/1
TH461	12W LED Track Head Square	12	820	24°	White	3000K	30K	045923404610	12/1
TH463	12W LED Track Head Square	12	820	36°	White	3000K	30K	045923404634	12/1
TH462	12W LED Track Head Square	12	820	24°	Black	3000K	30K	045923404627	12/1
TH464	12W LED Track Head Square	12	820	36°	Black	3000K	30K	045923404641	12/1
TH465	12W LED Track Head Square	12	820	24°	Brushed Nickel	3000K	30K	045923404658	12/1
TH467	12W LED Track Head Square	12	820	36°	Brushed Nickel	3000K	30K	045923404672	12/1
TH471	12W LED Track Small Cylinder	12	820	24°	White	3000K	30K	045923404719	12/1
TH473	12W LED Track Small Cylinder	12	820	36°	White	3000K	30K	045923404733	12/1
TH472	12W LED Track Small Cylinder	12	820	24°	Black	3000K	30K	045923404726	12/1
TH474	12W LED Track Small Cylinder	12	820	36°	Black	3000K	30K	045923404740	12/1
TH475	12W LED Track Small Cylinder	12	820	24°	Brushed Nickel	3000K	30K	045923404757	12/1
TH477	12W LED Track Small Cylinder	12	820	36°	Brushed Nickel	3000K	30K	045923404771	12/1

LED track kits and accessories

Features

- 2460 lumens - 820 lumens per head
- 36˚ beam angles
- Dimmable
- 3000K
- 90+ CRI
- Long life—30,000 hours
- Sleek, clean design
- Die cast construction
- 3 Year warranty

Includes

- 4' Track
- Floating canopy power feed
- All necessary mounting hardware

3 Conductor "H" type connector

Track with end cap removed

Round

TK403 White, 36°
TK404 Black, 36°
TK407 Brushed Nickel, 36°

White shown

Pinch Back

TK413 White, 36°
TK414 Black, 36°
TK417 Brushed Nickel, 36°

Black shown

Angle Arm

TK423 White, 36°
TK424 Black, 36°
TK427 Brushed Nickel, 36°

Brushed Nickel shown

LED Track Kits and Accessories

36 WATTS | DIMMABLE | 3000 K | 90 CRI | 30,000 HOURS

Item Number	Description	V	Total Watts	Finish	Total Lumens	CCT	Life/ Hrs.	UPC	Pack
TK403	Round White 3 Light LED Track Kit	120	36	White	2460	3000K	30K	045923434037	4/1
TK404	Round Black 3 Light LED Track Kit	120	36	Black	2460	3000K	30K	045923434044	4/1
TK407	Round Brushed Nickel 3 Light LED Track Kit	120	36	Brushed Nickel	2460	3000K	30K	045923434075	4/1
TK413	Pinch Back White 3 Light LED Track Kit	120	36	White	2460	3000K	30K	045923434136	4/1
TK414	Pinch Back Black 3 Light LED Track Kit	120	36	Black	2460	3000K	30K	045923434143	4/1
TK417	Pinch Back Brushed Nickel 3 Light LED Track Kit	120	36	Brushed Nickel	2460	3000K	30K	045923434174	4/1
TK423	Angle Arm White 3 Light LED Track Kit	120	36	White	2460	3000K	30K	045923434235	4/1
TK424	Angle Arm Black 3 Light LED Track Kit	120	36	Black	2460	3000K	30K	045923434242	4/1
TK427	Angle Arm Brushed Nickel 3 Light LED Track Kit	120	36	Brushed Nickel	2460	3000K	30K	045923434273	4/1

Track accessories

Tracks

All tracks include two dead end caps and all mounting hardware
Dimensions: Height 5/8", Width 1 5/16"
(length and color options below)

Size	White	Black	Brushed Nickel
2 FT	TR118	TR119	TR126
4 FT	TR120	TR121	TR127
6 FT	TR124	TR125	TR128
8 FT	TR122	TR123	TR129

Master Carton / 6

See Nuvo NU4030 for complete track program.

Track Power Feeds

Floating Canopy

Electrifies the track anywhere along the length of the run

TP154 White

TP155 Black

Conduit Live End

Electrifies the track from the end of the run to a conduit pipe

TP169 White

TP170 Black

Live End and Canopy

Electrifies the track from the end of the run

TP152 White

TP153 Black

"T" Connector

Connects three tracks together in a "T" shape pattern

TP148 White

TP149 Black

Inline Feed

Connects tracks in a straight
run and supplies power

TP171 White

TP172 Black

Master Carton / 12

Track Connectors

Mini Straight Connector

Connects tracks in a straight run

TP144 White

TP145 Black

"L" Connector

Connects tracks at a 90° angle

TP146 White

TP147 Black

"X" Connector

Connects four tracks together in an "X" shape pattern

TP150 White

TP151 Black

Flexible Connector

Variable angle connector

TP167 White

TP168 Black

Master Carton / 12

Thread® linear LED lighting system.
Simple. Functional. Consistent. Reliable.

THREAD®
LINEAR LED SYSTEM

Cove and
under-cabinet

Add dramatic LED lighting to any space, simply.

Thread Linear LED System Technical Overview

Thread internals

- Advanced on-board IC direct drive technology
- No external driver required
- No capacitor = greater reliability and longer life
- Reduced size

LED Packages

Patented IC Direct Drive Circuitry

Linear lighting continuity

- Custom PCB (printed circuit board) layout and fixture body design maintain LED package spacing as LED fixtures are joined together.

Consistent 0.5" LED Package Spacing

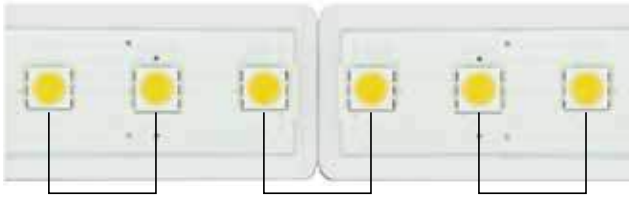

Removable diffuser lens (included)

- Softens visual glare
- Reduced reflectivity of LEDs from polished surfaces
- With lens removed lumen output increases by approximately 15%

Advanced color management

It's what makes Thread different.

- The ANSI range of 2700K is divided into 12 ranks.
- Our LED Packages only use 9 of the 12 ranks within the ANSI standard.
- Without the MRM procedure, the CCT may be spread over the range inside the blue diamond.
- After MRM, the range of CCT will shrink to within the green diamond.
- The Thread system, uses only 6 ranks and blends those ranks, so that the actual CCT range is much smaller and is similar to a 5-step McAdam ellipse. Ranking falls within the black dashed diamond.

MRM (Multi- Rank Mix) Diagram

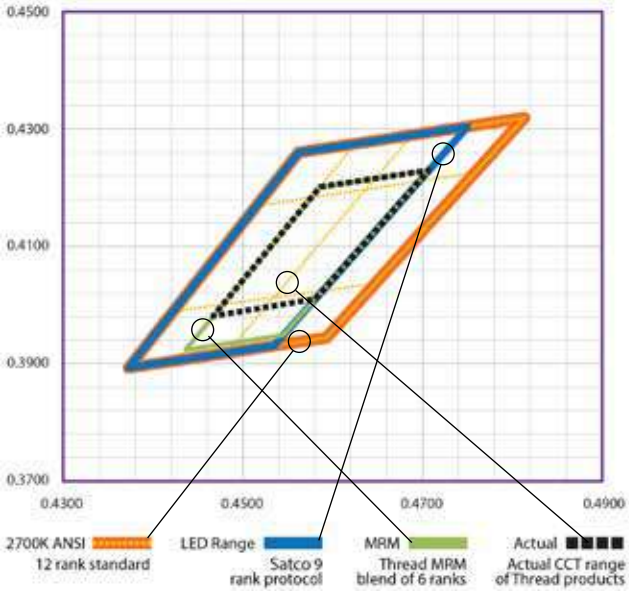

Connections are quick and easy

Keyed connectors

- Assures proper current flow
- Makes connections simple

Power feed

Female Male

Power connector

Female Male

Junction box

- Available with and without on/off side mounted rocker switch
- Supplied with 3/8" Romex connectors and rubber hole plugs
- Approved for branch circuit wiring
- Accepts 14/3 wire
- 3/8" Knockouts on back of box
- Female power connector located on side of box

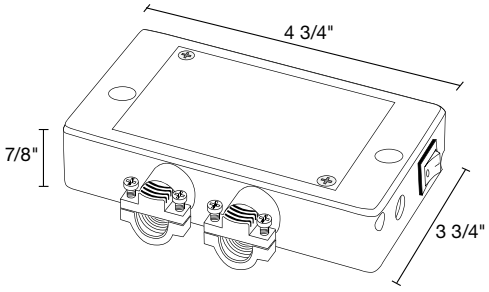

Direct Connector
Power Feed Installation

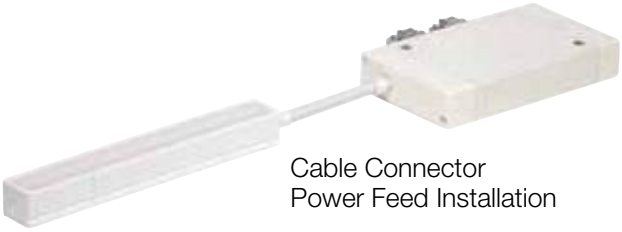

Cable Connector
Power Feed Installation

Accessories

Each Thread linear LED system comes with:

Flat mounting clips

45° Mounting clips

Closed end cap

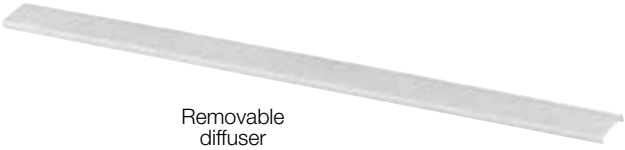

Removable diffuser

Power accessories (optional)

10' switched power cord & plug
63-301

On/Off Rocker Switch Hardware Junction Box
63-314

Female power connection

No Switch Hardware Junction Box
63-315

Accessories

Connection accessories (optional)

Direct connector
63-302

Connecting cable
2" **63-303**, 6" **63-304**, 12" **63-305**,
18" **63-306**, 24" **63-307**

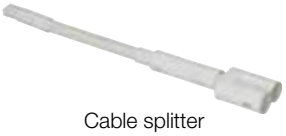

Cable splitter
63-309

Female to female coupler
63-311

Key features

- Available in 6", 10", 21" and 30"
- On board IC driver—no external driver required
- 2700K or 3500K
- 312 Lumens per foot at 2700K
- 330 Lumens per foot at 3500K
- CRI 80+
- Diffuser lens for even light—eliminates hot spots and glare - included
- Flat mounting clips, 45° mounting clips, removable diffusing lens and closed end cap included with each unit
- Very low heat, no UV or IR radiation
- Direct-wire or portable installations–various connection accessories available
- Up to 65' continuous runs off one power feed
- Exact spacing of LEDs, including fixture to fixture for consistent, even lighting
- 50,000 hours rated life
- ENERGY STAR certified for under-cabinet and cove applications
- 5 year warranty*
- Construction: Extruded polycarbonate body and diffuser lens
- Power: 120V AC
- Light source: LED 2700K and 3500K
- Finish: White
- Dimming to less than 5% with electronic low voltage (ELV) dimmers
- Damp location listed

ENERGY STAR, ETL and FCC certification

Item Number	Size Type	Color Temp.	W	V	Luminous Flux	Luminous Efficacy	Color Index	Beam Angle	Dimensions	Life/ Hours	UPC	Pack
63-101	6"	2700K	2.4	120	156	56	80↑	110°	6" L x .826" W x .708" H	50K	045923261015	6/1
63-201	6"	3500K	2.4	120	165	59	80↑	110°	6" L x .826" W x .708" H	50K	045923262012	6/1
63-102	10"	2700K	4.2	120	260	62	80↑	110°	10" L x .826" W x .708" H	50K	045923261022	6/1
63-202	10"	3500K	4.2	120	275	65	80↑	110°	10" L x .826" W x .708" H	50K	045923262029	6/1
63-103	21"	2700K	8.8	120	540	61	80↑	110°	21" L x .826" W x .708" H	50K	045923261039	6/1
63-203	21"	3500K	8.8	120	570	65	80↑	110°	21" L x .826" W x .708" H	50K	045923262036	6/1
63-104	30"	2700K	13	120	800	62	80↑	110°	30" L x .826" W x .708" H	50K	045923261046	6/1
63-204	30"	3500K	13	120	840	65	80↑	110°	30" L x .826" W x .708" H	50K	045923262043	6/1

Satco smart home Z wave enabled devices

Control lighting and small appliances from smart phones, anywhere, anytime.

Satco's new smart home wall switches and plug-in modules allow you to control lighting, and even small appliances, right from a smart phone, anywhere you are. Enable the app for your home's Z-Wave enabled hub in a phone, and it will speak directly to our products. And each switch or module are signal repeaters, meaning the signal hops from one to the next creating a complete "mesh network" throughout the home, controllable from anywhere. Z-Wave is the most open development environment for smart products and services, and is the protocol of choice for more than 400 of today's leading global manufacturers. And service providers have made Z Wave their protocol of choice as well. Satco's smart home plug-in modules and switches make Satco part of the world's largest ecosystem of smart "things" for the IOT.

Smart home gear: 86-100 plug-in appliance module*

Features

- Turns ON/OFF incandescent, CFL, or LED lamps, and AC operated electrical appliances
- LED back-lit Key for manual ON/OFF and status indicator
- Z-Wave Plus Certified
- Controls appliances up to 15A
- Functions as Z-Wave signal repeater
- Grounded 3-pin AC power receptacle to enhance safety
- Compact design - does not block the 2nd AC outlet
- Over-The-Air firmware upgrade available, if supported by controller
- Supports Network Wide Inclusion (inclusion through a repeater), if supported by controller
- Powered by Sigma Design 500 Series module inside

General

Parameter	
Operating Temperature	32° F to 104° F
Storage Temperature	-4° F to 140° F
Storage Humidity	80%
Electrical Ratings	
Input Voltage	120 VAC RMS
Input Frequency	60Hz
Maximum Output Load	900W incandescent, 200W CFL/LED, ½ horsepower motor and 15A, 1800W resistive load
Fuse	0.5A
Z-Wave Frequency for USA and Canada	908.4Mhz at 40kps, 916Mhz at 100kps
Wireless Range (controller & repeater)	130 ft. at open air, 1 meter high, LOS
Modulation	FSK/GFSK
Tx Power from IC setting	2 dbm
Rx Sensitivity at 40 kps	-99 dbm
Rx Sensitivity at 100 kps	-91.8 dbm

Mechanical Parameters	
Dimensions	Body: L3.27" X W2.13" X H1.5"
With plug:	L3.27" X W2.13" X H2.32"
Color	Munsell N9 Apple White
Material	PC, Type 6485

Supplied Parts	
Description	Quantity
86-100 Plug-In Appliance Module	1
Instruction Manual	1

Smart home gear: 86-101 plug-in dimmer module*

Features

- Works with incandescent and most dimmable fluorescent (CFL), or LED lighting
- LED back-lit Key for manual ON/OFF and status indicator
- GROUP/SCENE/ALL enabled, if supported by controller
- Over-The-Air firmware upgrade available, if supported by controller
- Supports Network Wide Inclusion (inclusion through a repeater), if supported by controller
- Powered by Sigma Design 500 Series module inside
- Compact design - does not block the 2nd AC outlet
- Functions as Z-Wave repeater

General

Parameter	
Operating Temperature	32° F to 104° F
Storage Temperature	-4° F to 140° F
Storage Humidity	80%
Electrical Ratings	
Input Voltage	120 VAC RMS
Input Frequency	60Hz
Maximum Output Load	Incandescent 300W (2.5A), Dimmable CFL/LED 65W Fuse 5A
Fuse	5A
Dimmer conduction angle	90% at max fully on position
Z-Wave Frequency for USA and Canada	908.4Mhz at 40kps, 916Mhz at 100kps
Wireless Range (controller & repeater)	130 ft. at open air, 1 meter high, LOS
Modulation	FSK/GFSK
Tx Power from IC setting	2 dbm
Rx Sensitivity at 40 kps	-99 dbm
Rx Sensitivity at 100 kps	-91.8 dbm

Mechanical Parameters	
Dimensions	Body: L3.27" X W2.13" X H1.5"
With plug:	L3.27" X W2.13" X H1.5"
Color	Munsell N9 Apple White
Material	PC, Type 6485

Supplied Parts	
Description	Quantity
86-101 Plug-In Dimmer Module 1	1
Instruction Manual	1

Smart home gear: 86-102 in-wall light switch*

Features

- Works with incandescent lamps, fluorescent (CFL), and LED lighting
- Fits standard wall plate (not included)
- Z-Wave Plus Certified
- Clean design with white LED status indicator
- GROUP/ALL enabled, if supported by controller
- Multiple scene control using double and triple tap
- Provides instant manual status change to controller
- Supports Central Scene command class
- Over-The-Air firmware upgrade available, if supported by controller
- Supports Network Wide Inclusion (inclusion through a repeater), if supported by controller
- Powered by Sigma Design 500 Series module inside
- Functions as a Z-Wave signal repeater
- Supports screw and wire terminals

General

Parameter	
Operating Temperature	32° F to 104° F
Storage Temperature	-4° F to 140° F
Storage Humidity	80%
Electrical Ratings	
Input Voltage	120 VAC RMS
Input Frequency	60Hz
Wire Terminals	Requires neutral
Maximum Output Load	900W incandescent, 200W CFL/LED, ½ horsepower motor and 15A, 1800W resistive load
Fuse	0.5A
Z-Wave Frequency for USA and Canada	908.4Mhz at 40kps, 916Mhz at 100kps
Wireless Range (controller & repeater)	130 ft. at open air, 1 meter high, LOS
Modulation	FSK/GFSK
Tx Power from IC setting	2 dbm
Rx Sensitivity at 40 kps	-99 dbm
Rx Sensitivity at 100 kps	-91.8 dbm
Standby Current	25mA

Mechanical Parameters	
Dimensions	Body:2.8"x1.71"x1.41" Yoke: 4.13"x2.13"x.076"
Minimum Hole for Wire	Accepts #12 AWG (0.081" dia) Doesn't Accept #8 AWG (0.1285"dia)
Wire Type	Copper or plated aluminum
Clamp Parts	Copper only
Wire Binding Screws	UL 486a/b: Minimum Dia=#6(.138) Max Threads/inch = 36
Color	Munsell N9 Apple White
Material	PC, Type 6485

Supplied Parts	
Description	Quantity
86-102 In-Wall Light Switch	1
Mounting Screws	2
Instruction Manual	1

Smart home gear: 86-103 in-wall dimmer*

Features

- Works with incandescent and most dimmable fluorescent (CFL), or LED lighting
- 7 LEDs to indicate ON/OFF/Dimming level status
- Fits standard wall plate (not included)
- Z-Wave Plus Certified
- GROUP/ALL enabled, if supported by controller
- Multiple scene control using double and triple tap
- Provides instant manual status change to controller
- Supports Central Scene command class
- Over-The-Air firmware upgrade available, if supported by controller
- Supports Network Wide Inclusion (inclusion through a repeater), if supported by controller
- Powered by Sigma Design 500 Series module inside
- Functions as a Z-Wave signal repeater
- Supports screw and wire terminals

General

Parameter	
Operating Temperature	32° F to 104° F
Storage Temperature	-4° F to 140° F
Storage Humidity	80%
Electrical Ratings	
Input Voltage	120 VAC RMS
Input Frequency	60Hz
Maximum Output Load	Incandescent (600W, single gang), Dimmable CFL/LED (150W)
Wire Terminals	Requires neutral
Fuse	10A
Z-Wave Frequency for USA and Canada	908.4Mhz at 40kps, 916Mhz at 100kps
Wireless Range (controller & repeater)	130 ft. at open air, 1 meter high, LOS
Modulation	FSK/GFSK
Tx Power from IC setting	2 dbm
Rx Sensitivity at 40 kps	-99 dbm
Rx Sensitivity at 100 kps	-91.8 dbm
Standby Current	25mA

Mechanical Parameters	
Dimensions	Body:2.8"x1.71"x1.41" Yoke: 4.13"x2.13"x.076"
Wire Terminals	Line, Load, Ground, Traveler, Neutral
Minimum Hole for Wire	Accepts #12 AWG (0.081" dia) Doesn't Accept #8 AWG (0.1285"dia)
Wire Type	Copper or plated aluminum
Clamp Parts	Copper only
Wire Binding Screws	UL 486a/b: Minimum Dia=#6(.138) Max Threads/inch = 36
Color	Munsell N9 Apple White
Material	PC, Type 6485

Supplied Parts	
Description	Quantity
86-103 In-Wall Dimmer	1
Mounting Screws	2
Instruction Manual	1

Smart home gear: 86-104 3-way auxiliary switch*

Features

- 3 way switch that works with Satco 86-102 wall switch or 86-103 wall dimmer
- Fits standard wall plate (not included)
- Reliable and affordable way to add 3 way or 4 way switch
- Up to 3 86-104 auxiliary switches (5 way) can be used with one Satco in wall switch or dimmer
- Connects and controls through traveler wire
- When used with Satco 86-103 dimmer, 86-104 can also be used to control dimming
- Multiple scene control using double and triple tap
- Provides instant manual status change to controller
- Supports Central Scene command class
- Supports screw and wire terminals

General

Parameter	
Operating Temperature	32° F to 104° F
Storage Temperature	-4° F to 140° F
Storage Humidity	80%
Mechanical Parameters	
Dimensions	Body: 2.8"x1.71"x1.41" Yoke: 4.13"x2.13"x.076"
Wire Terminals	Traveler, Neutral, Ground. Requires neutral and traveler wire
Minimum Hole for Wire	Accepts #12 AWG (0.081" dia) Doesn't Accept #8 AWG (0.1285"dia)
Wire Type	Copper only
Clamp Parts	Copper or plated aluminum
Wire Binding Screws	UL 486a/b: Minimum Dia=#6(.138) Max Threads/inch = 36
Color	Munsell N9 Apple White
Material	PC, Type 6485

Supplied Parts	
Description	Quantity
86-104 3 Way Auxiliary Switch	1
Mounting Screws	2
Instruction Manual	1

Item Number	Page #
25-4091	49
62-745	54
62-746	54
62-747	54
62-748	54
62-765	54
62-766	54
62-786	51
62-787	51
62-788	51
62-789	51
62-795	56
62-796	56
62-797	57
62-798	57
62-971	58
62-972	58
62-975	58
62-976	58
62-977	58
62-978	58
62-981	58
62-982	58
62-991	60
62-1031	48
62-1032	48
62-1033	48
62-1034	48
62-1035	45
62-1036	45
62-1037	45
62-1038	45
62-1039	46
62-1040	46
62-1041	45
62-1042	50
62-1043	50
62-1044	50
62-1045	47
62-1046	47
62-1051	19
62-1052	20
62-1053	19
62-1054	21
62-1055	22
62-1056	22

Item Number	Page #
62-1057	22
62-1061	14
62-1062	14
62-1063	14
62-1064	14
62-1065	14
62-1066	14
62-1067	14
62-1068	14
62-1069	14
62-1071	15
62-1072	15
62-1073	15
62-1074	15
62-1075	15
62-1076	15
62-1077	15
62-1078	15
62-1095	55
62-1096	55
62-1097	55
62-1098	55
62-1141	89
62-1142	89
62-1143	89
62-1144	89
62-1145	89
62-1146	89
62-1151	19
62-1152	20
62-1153	19
62-1154	21
62-1155	22
62-1156	22
62-1157	22
62-1161	52
62-1162	52
62-1163	52
62-1164	52
62-1165	52
62-1166	52
62-1167	52
62-1168	52
62-1171	23
62-1172	24
62-1173	23

Item Number	Page #
62-1174	24
62-1175	25
62-1176	25
62-1177	25
62-1181	23
62-1182	24
62-1183	23
62-1184	24
62-1185	25
62-1186	25
62-1187	25
62-1191	26
62-1192	26
62-1251	19
62-1252	20
62-1253	19
62-1254	21
62-1255	22
62-1256	22
62-1257	22
62-1261	53
62-1262	53
62-1263	53
62-1264	53
62-1265	53
62-1266	53
62-1267	53
62-1268	53
62-1291	26
62-1292	26
62-1294	26, 27
62-1295	26, 27
62-1301	38
62-1302	38
62-1303	38
62-1304	38
62-1305	38
62-1306	38
62-1307	38
62-1308	38
62-1371	23
62-1372	24
62-1373	23
62-1374	24
62-1375	25
62-1376	25

Item Number	Page #
62-1377	25
62-1381	23
62-1382	24
62-1383	23
62-1384	24
62-1385	25
62-1386	25
62-1387	25
62-2932	49
62-2934	49
62-2936	49
62-2938	49
63-101	123
63-102	123
63-103	123
63-104	123
63-201	123
63-202	123
63-203	123
63-204	123
63-301	122
63-302	123
63-303	123
63-304	123
63-305	123
63-306	123
63-307	123
63-309	123
63-311	123
63-314	122
63-315	122
65-049	81
65-050	66
65-051	66
65-052	67
65-053	67
65-054	86
65-055	86
65-056R1	79
65-057R1	80
65-058R1	82
65-059R1	83
65-062	68
65-063	69
65-073R1	84
65-074R1	85

Item Number	Page #
65-078	87
65-079	87
65-084	86
65-088	16
65-089	16
65-091	63
65-092	63
65-093	62
65-094	62
65-095	72
65-096	72
65-097	73
65-098	74
65-101	70
65-102	70
65-103	71
65-104	71
65-105	63
65-106	63
65-107	62
65-108	62
65-113	88
65-114	88
65-121	64
65-122	65
65-123	65
65-124	64
65-125	65
65-126	65
65-127	64
65-128	65
65-129	65
65-131	75
65-132	75
65-133	75
65-134	76
65-135	76
65-136	76
65-151	77
65-152	77
65-153	77
65-154	77
65-155	77
65-156	77
65-157	77
65-158	77

Item Number	Page #
65-159	78
65-160	78
65-161	78
65-162	78
65-163	78
65-164	78
65-165	78
65-166	78
65-201	63
65-202	63
65-203	62
65-204	62
65-205	63
65-206	63
65-207	62
65-208	62
65-301	13
65-302	13
65-303	13
65-304	13
65-305	13
65-306	13
65-307	13
65-308	13
65-309	13
65-321	8
65-322	8
65-323	8
65-324	8
65-325	8
65-326	8
65-333	11
65-334	11
65-335	11
65-336	11
65-337	11
65-338	11
65-339	8
65-340	8
65-341	8
65-347	10
65-348	10
65-351	10
65-352	10
65-355	10
65-356	10

Item Number	Page #
65-361	12
65-362	12
65-363	12
65-364	12
65-365	12
65-366	12
65-367	12
65-371	9
65-372	9
65-373	9
65-374	9
65-375	9
65-376	9
65-377	9
65-378	9
65-379	9
65-401	93
65-402	93
65-403	92
65-404	92
65-405	93
65-406	93
65-407	92
65-408	92
65-409	93
65-410	93
65-411	92
65-412	92
65-1081	43
65-1082	43
65-1083	43
65-1084	43
65-1091	43
65-1092	43
65-1101	44
65-1102	44
65-1103	44
65-1104	44
65-1107	44
65-1108	44
80-936	112, 113
80-937	112, 113
80-938	112, 113
80-939	112, 113
86-100	125
86-101	126

Item Number	Page #
86-102	127
86-103	128
86-104	129
86-201	15, 16
S8705	110, 111
S8706	110, 111
S8707	110, 111
S8708	110, 111
S9011	108
S9012	108
S9013	108
S9026	109
S9027	109
S9028	109
S9055	106
S9056	106
S9057	106
S9061	107
S9062	107
S9063	107
S9299	59, 60
S9312	102
S9313	102
S9314	102
S9315	102
S9368	35
S9369	35
S9500	95
S9501	95
S9502	95
S9503	95
S9504	96
S9505	96
S9506	96
S9507	96
S9508	95, 97
S9509	95, 97
S9510	95, 97
S9511	95, 97
S9512	96
S9513	96
S9514	96
S9515	96
S9516	98, 99
S9517	98, 99
S9518	98, 99

Item Number	Page #
S9519	98, 99
S9520	98, 99
S9521	98, 99
S9522	98, 99
S9523	98, 99
S9524	95
S9525	96
S9526	98, 99
S9527	98, 99
S9528	98, 99
S9529	98, 99
S9530	98, 99
S9531	98, 99
S9532	98, 99
S9533	98, 99
S9534	98, 99
S9535	98, 99
S9536	98, 99
S9537	98, 99
S9538	114
S9539	114
S9540	114
S9541	114
S9554	98, 99
S9555	98, 99
S9556	98, 99
S9557	98, 99
S9598	103
S9599	103
S9646	98, 99
S9647	98, 99
S9648	98, 99
S9649	98, 99
S9693	98, 99
S9694	98, 99
S9695	98, 99
S9696	98, 99
S9713	100
S9714	100
S9715	100
S9716	100
S9724	101
S9725	101
S9726	101
S9727	101

Item Number	Page #
S9740	101
S9741	101
S9742	101
S9743	101
S9744	100
S9745	101
S9756	104
S9757	104
S9758	104
S9759	104
S9770	105
S9771	105
S9772	105
S9773	105
S9780	59, 60
S9785	97
S9786	97
S9787	97
S9788	97
S9789	97
S9880	36
S9881	36
S9882	37, 38
S9883	37, 38
S9884	37, 38
S9885	37, 38
S9886	37, 38
S9887	37, 38
S9888	37, 38
S9889	37, 38
S21500	28
S21501	28
S21502	28
S21503	29
S21504	29
S21505	29
S21506	29
S21507	30
S21508	30
S21509	31
S21510	31
S21511	31
S21512	32
S21513	32
S21514	32

Item Number	Page #
S21515	33
S21516	33
S21517	33
S29320	28
S29321	28
S29322	28
S29323	28
S29324	29
S29325	29
S29326	29
S29327	29
S29328	30
S29329	30
S29330	30
S29331	30
S29332	31
S29333	31
S29334	31
S29335	31
S29336	32
S29337	32
S29338	32
S29339	32
S29340	33
S29341	33
S29342	33
S29343	33
S29344	39
S29345	39
S29346	39
S29347	39
S29349	30
S29359	28
S29360	30
S29361	31
S29362	32
S29363	33
S29367	30
S29379	32
S29463	100
S29464	100
S29465	100
S29466	100
S29467	100
S29468	100

Item Number	Page #
S29472	101
S29473	101
S29474	101
S29650	34
S29651	34
S29652	34
S29653	39
S29654	39
S29655	30
S29656	40
S29657	40
S29658	40
S29659	40
S29690	32
S29691	34
TH401	116
TH402	116
TH403	116
TH404	116
TH405	116
TH407	116
TH411	116
TH412	116
TH413	116
TH414	116
TH415	116
TH417	116
TH421	116
TH422	116
TH423	116
TH424	116
TH425	116
TH427	116
TH431	116
TH432	116
TH433	116
TH434	116
TH435	116
TH437	116
TH441	117
TH442	117
TH443	117
TH444	117
TH445	117
TH447	117

Item Number	Page #
TH451	117
TH452	117
TH453	117
TH454	117
TH455	117
TH457	117
TH461	117
TH462	117
TH463	117
TH464	117
TH465	117
TH467	117
TH471	117
TH472	117
TH473	117
TH474	117
TH475	117
TH477	117
TK403	118
TK404	118
TK407	118
TK413	118
TK414	118
TK417	118
TK423	118
TK424	118
TK427	118
TP144	119
TP145	119
TP146	119
TP147	119
TP148	119
TP149	119
TP150	119
TP151	119
TP152	119
TP153	119
TP154	119
TP155	119
TP167	119
TP168	119
TP169	119
TP170	119
TP171	119
TP172	119

Item Number	Page #
TR118	119
TR119	119
TR120	119
TR121	119
TR122	119
TR123	119
TR124	119
TR125	119
TR126	119
TR127	119
TR128	119
TR129	119

Notes:

Notes:

SATCO® | NUVO®

National Toll-Free:
800-43-SATCO
(800-437-2826)
www.satco.com

Copyright © 2018
Satco Products, Inc
All Rights Reserved.

7/18 NU1350-2
$10.00

Distribution Centers:

FLORIDA
900 N.W. 159th Dr.
Miami, FL 33169
PH 305-624-2044
FX 305-623-0286

CALIFORNIA
31288 San Benito St.
Hayward, CA 94544
PH 510-487-4822
FX 510-487-8955

WASHINGTON
4710 116th St. S.W.
Mukilteo, WA 98275
PH 425-789-3300
FX 425-789-3310

TEXAS
2000 Valwood Pkwy.
Farmers Branch, TX
75234
PH 972-247-2437
FX 972-247-5408

PUERTO RICO
Campeche St. 23
Julio N. Matos
Industrial Park,
Carolina, PR 00984
PH 787-757-3510
FX 787-757-3540

Corporate Offices and Distribution Center:

NEW YORK
110 Heartland Blvd.
Brentwood, NY 11717
PH 631-243-2022
FX 631-243-2027

SATCO® | NUVO® LIGHTING

LED FILAMENT LAMPS

LED filament lamps

Applications / Features

- LED with a traditional incandescent look and feel
- Omni-directional light source
- Dimmable
- Replaces up to 60 watt lamps
- Long life—up to 25,000 hours
- Damp location
- Approved for totally enclosed fixtures
- cUL listed
- 3 Year warranty

S9560

A15 LED Filament Lamps

360° BEAM | DIMMABLE | ENCLOSED FIXTURE | DAMP LOCATION

Item Number	Lamp Description	W	Bulb Type	Base	V	Finish	CCT	Lm	CRI	M.O.L. (Inches)	Life/ Hrs.	UPC	Pack
S9560	4.5A15/CL/LED/E26/27K/120V	4.5	A15	E26	120	Clear	2700K	450	80	3 ⅜	15K	045923095603	24/6

S9561, S9562

S9824, S9825
Soft white
NEW

S9826
Silver crown
NEW

A19 LED Filament Lamps

† 360° BEAM | DIMMABLE | ENCLOSED FIXTURE | DAMP LOCATION

Item Number	Lamp Description	W	Bulb Type	Base	V	Finish	CCT	Lm	CRI	M.O.L. (Inches)	Life/ Hrs.	UPC	Pack
S9561†	4.5A19/CL/LED/E26/27K/120V	4.5	A19	E26	120	Clear	2700K	450	80	4 ⅛	15K	045923095610	24/6
S9562†	6.5A19/CL/LED/E26/27K/120V	6.5	A19	E26	120	Clear	2700K	800	80	4 ⅛	15K	045923095627	24/6
S9824†	4.5A19/SW/LED/E26/27K/120V	4.5	A19	E26	120	Soft White	2700K	400	80	4 ⅛	15K	045923098246	24/6
S9825†	6.5A19/SW/LED/E26/27K/120V	6.5	A19	E26	120	Soft White	2700K	720	80	4 ⅛	15K	045923098253	24/6
S9826	6.5A19/SLV/LED/E26/27K/120V	6.5	A19	E26	120	Silver Crown	2700K	650	80	4 ⅛	15K	045923098260	24/6

S9563, S9564

S9827
Soft white
NEW

S9828
Silver crown
NEW

G25 LED Filament Lamps

† 360° BEAM | DIMMABLE | ENCLOSED FIXTURE | DAMP LOCATION | * ENERGY STAR

Item Number	Lamp Description	W	Bulb Type	Base	V	Finish	CCT	Lm	CRI	M.O.L. (Inches)	Life/ Hrs.	UPC	Pack
S9563†*	5.5G25/CL/LED/E26/27K/120V	5.5	G25	E26	120	Clear	2700K	550	80	4 ⅜	25K	045923095634	24/6
S9564†	6.5G25/CL/LED/E26/27K/120V	6.5	G25	E26	120	Clear	2700K	810	80	4 ⅜	15K	045923095641	24/6
S9827†	4.5G25/SW/LED/E26/27K/120V	4.5	G25	E26	120	Soft white	2700K	430	80	4 ⅜	15K	045923098277	24/6
S9828	4.5G25/SLV/LED/E26/27K/120V	4.5	G25	E26	120	Silver Crown	2700K	430	80	4 ⅜	15K	045923098284	24/6

S9567, S9569

S9568, S9570

S9571, S9573

S9572, S9574

S9866, S9920, S9922
NEW

S9867, S9921, S9923
NEW

S9868
NEW

S9869
NEW

Decorative LED Filament Lamps

360° BEAM | DIMMABLE | ENCLOSED FIXTURE | DAMP LOCATION | * ENERGY STAR

Item Number	Lamp Description	W	Bulb Type	Base	V	Finish	CCT	Lm	CRI	M.O.L. (Inches)	Life/ Hrs.	UPC	Pack
S9567*	2.5W ETC/LED/27K/120V	2.5	C11	E26	120	Clear	2700K	250	80	3 ½	15K	045923095672	24/6
S9568*	2.5W CTC/LED/27K/120V	2.5	C11	E12	120	Clear	2700K	250	80	4 5/16	15K	045923095689	24/6
S9569*	4.5W ETC/LED/27K/120V	4.5	C11	E26	120	Clear	2700K	450	80	3 ½	15K	045923095696	24/6
S9570*	4.5W CTC/LED/27K/120V	4.5	C11	E12	120	Clear	2700K	450	80	4 5/16	15K	045923095702	24/6
S9571	2.5W EFC/LED/27K/120V	2.5	CA11	E26	120	Clear	2700K	250	80	4 5/16	15K	045923095719	24/6
S9572	2.5W CFC/LED/27K/120V	2.5	CA11	E12	120	Clear	2700K	250	80	5	15K	045923095726	24/6
S9573	4.5W EFC/LED/27K/120V	4.5	CA11	E26	120	Clear	2700K	450	80	4 5/16	15K	045923095733	24/6
S9574	4.5W CFC/LED/27K/120V	4.5	CA11	E12	120	Clear	2700K	450	80	5	15K	045923095740	24/6
S9866	3.5CTC/LED/CL/50K/120V	3.5	C11	E12	120	Clear	5000K	350	80	4 5/16	15K	045923098666	24/6
S9867	3.5CFC/LED/CL/50K/120V	3.5	CA11	E12	120	Clear	5000K	350	80	5	15K	045923098673	24/6
S9868	3.5CTF/LED/FR/27K/120V	3.5	C11	E12	120	Frosted	2700K	350	80	4 5/16	15K	045923098680	24/6
S9869	3.5CFF/LED/FR/27K/120V	3.5	CA11	E12	120	Frosted	2700K	350	80	5	15K	045923098697	24/6
S9920	2.5W CTC/LED/CL/27K/120V	2.5	C11	E12	120	Clear	2700K	200	80	3 ⅞	15K	045923099205	24/6
S9921	2.5W CFC/LED/CL/27K/120V	2.5	CA11	E12	120	Clear	2700K	200	80	4 11/16	15K	045923099212	24/6
S9922	3.5W CTC/LED/CL/27K/120V	3.5	C11	E12	120	Clear	2700K	350	80	3 ⅞	15K	045923099229	24/6
S9923	3.5W CFC/LED/CL/27K/120V	3.5	CA11	E12	120	Clear	2700K	350	80	4 11/16	15K	045923099236	24/6

S9870
NEW

S9871
NEW

G16.5 LED Filament Lamps

360° BEAM | DIMMABLE | ENCLOSED FIXTURE | DAMP LOCATION | * ENERGY STAR

Item Number	Lamp Description	W	Bulb Type	Base	V	Finish	CCT	Lm	CRI	M.O.L. (Inches)	Life/ Hrs.	UPC	Pack
S9870	2.5G16.5/LED/CL/27K/120V	2.5	G16 1/2	E12	120	Clear	2700K	200	80	3 3/16	15K	045923098703	24/6
S9871	3.5G16.5/LED/CL/27K/120V	3.5	G16 1/2	E12	120	Clear	2700K	350	80	3 3/16	15K	045923098710	24/6

LED filament lamps

Applications / Features

- LED with a traditional incandescent look and feel
- Omni-directional light source
- Dimmable
- Replaces up to 60 watt lamps
- Long life—up to 15,000 hours
- Damp location
- Approved for totally enclosed fixtures
- cUL listed
- 3 Year warranty

S9565, S9566

G40 LED Filament Lamps

360° BEAM | DIMMABLE | ENCLOSED FIXTURE | DAMP LOCATION

Item Number	Lamp Description	W	Bulb Type	Base	V	Finish	CCT	Lm	CRI	M.O.L. (Inches)	Life/ Hrs.	UPC	Pack
S9565	4.5G40/CL/LED/E26/27K/120V	4.5	G40	E26	120	Clear	2700K	450	80	6 ½	15K	045923095658	24/6
S9566	6.5G40/CL/LED/E26/27K/120V	6.5	G40	E26	120	Clear	2700K	800	80	6 ½	15K	045923095665	24/6

S9575, S9576

BT15 LED Filament Lamps

360° BEAM | DIMMABLE | DAMP LOCATION | ENCLOSED FIXTURE

Item Number	Lamp Description	W	Bulb Type	Base	V	Finish	CCT	Lm	CRI	M.O.L. (Inches)	Life/ Hrs.	UPC	Pack
S9575	4.5BT15/CL/LED/E26/27K/120V	4.5	BT15	E26	120	Clear	2700K	450	80	4 ⅛	15K	045923095757	24/6
S9576	6.5BT15/CL/LED/E26/27K/120V	6.5	BT15	E26	120	Clear	2700K	800	80	4 ⅛	15K	045923095764	24/6

S9581

ST19 LED Filament Lamps

360° BEAM | DIMMABLE | DAMP LOCATION | ENCLOSED FIXTURE

Item Number	Lamp Description	W	Bulb Type	Base	V	Finish	CCT	Lm	CRI	M.O.L. (Inches)	Life/ Hrs.	UPC	Pack
S9581	6.5ST19/CL/LED/E26/27K/120V	6.5	ST19	E26	120	Clear	2700K	810	80	5 ½	15K	045923095818	24/6

T9, T10, T6 LED FILAMENT LAMPS

S9582

NEW

T9 LED Filament Lamps

360° BEAM | DIMMABLE | DAMP LOCATION | ENCLOSED FIXTURE

Item Number	Lamp Description	W	Bulb Type	Base	V	Finish	CCT	Lm	CRI	M.O.L. (Inches)	Life/ Hrs.	UPC	Pack
S9582	6.5T9/CL/LED/E26/27K/120V	6.5	T9	E26	120	Clear	2700K	800	80	12	15K	045923095825	24/6

S9580

T10 LED Filament Lamps

360° BEAM | DIMMABLE | DAMP LOCATION | ENCLOSED FIXTURE

Item Number	Lamp Description	W	Bulb Type	Base	V	Finish	CCT	Lm	CRI	M.O.L. (Inches)	Life/ Hrs.	UPC	Pack
S9580	4.5T10/LED/E26/27K/120V	4.5	T10	E26	120	Clear	2700K	430	80	5	15K	045923095801	24/6

S9872

NEW

T6 LED Filament Lamps

360° BEAM | DIMMABLE | DAMP LOCATION | ENCLOSED FIXTURE

Item Number	Lamp Description	W	Bulb Type	Base	V	Finish	CCT	Lm	CRI	M.O.L. (Inches)	Life/ Hrs.	UPC	Pack
S9872	2.5T6/LED/CL/27K/E12/120V	2.5	T6	E12	120	Clear	2700K	200	80	3 3/16	15K	045923098727	24/6

Vintage Style LED filament lamps

Applications / Features

- LED with a traditional vintage look and feel
- Amber finish
- Omni-directional light source
- Dimmable
- 2200 & 2300K - warm tone color temperature
- Replaces up to 60 watt lamps
- Long life—15,000 hours
- Damp location
- Approved for totally enclosed fixtures
- cUL listed
- 3 Year warranty

S9577, S9578, S9579

S9585 NEW

360° BEAM | DIMMABLE | ENCLOSED FIXTURE | DAMP LOCATION

ST19 LED Filament Lamps

Item Number	Lamp Description	W	Bulb Type	Base	V	Finish	CCT	Lm	CRI	M.O.L. (Inches)	Life/ Hrs.	UPC	Pack
S9577	2.5ST19/AMB/LED/E26/23K/120V	2.5	ST19	E26	120	Amber	2300K	220	80	5 ⅜	15K	045923095771	24/6
S9578	4.5ST19/AMB/LED/E26/23K/120V	4.5	ST19	E26	120	Amber	2300K	400	80	5 ⅜	15K	045923095788	24/6
S9579	6.5ST19/AMB/LED/E26/23K/120V	6.5	ST19	E26	120	Amber	2300K	650	80	5 ⅜	15K	045923095795	24/6
S9585	4.5ST19/AMB/LED/E26/22K/120V	4.5	ST19	E26	120	Amber	2200K	380	80	5 ½	15K	045923095856	24/6

S9583 NEW

360° BEAM | DIMMABLE | ENCLOSED FIXTURE | DAMP LOCATION

A19 LED Filament Lamps

Item Number	Lamp Description	W	Bulb Type	Base	V	Finish	CCT	Lm	CRI	M.O.L. (Inches)	Life/ Hrs.	UPC	Pack
S9583	4.5A19/AMB/LED/E26/22K/120V	4.5	A19	E26	120	Amber	2200K	380	80	4 ⅛	15K	045923095832	24/6

S9584 NEW

360° BEAM | DIMMABLE | ENCLOSED FIXTURE | DAMP LOCATION

G25 LED Filament Lamps

Item Number	Lamp Description	W	Bulb Type	Base	V	Finish	CCT	Lm	CRI	M.O.L. (Inches)	Life/ Hrs.	UPC	Pack
S9584	4.5G25/AMB/LED/E26/22K/120V	4.5	G25	E26	120	Amber	2200K	380	80	4 ⅜	15K	045923095849	24/6

S9588
NEW

T9 LED Filament Lamps

360° BEAM | DIMMABLE | ENCLOSED FIXTURE | DAMP LOCATION

Item Number	Lamp Description	W	Bulb Type	Base	V	Finish	CCT	Lm	CRI	M.O.L. (Inches)	Life/ Hrs.	UPC	Pack
S9588	6.5T9/AMB/LED/E26/22K/120V	6.5	T9	E26	120	Amber	2200K	620	80	12	15K	045923095887	24/6

S9873
NEW

T6 LED Filament Lamps

360° BEAM | DIMMABLE | ENCLOSED FIXTURE | DAMP LOCATION

Item Number	Lamp Description	W	Bulb Type	Base	V	Finish	CCT	Lm	CRI	M.O.L. (Inches)	Life/ Hrs.	UPC	Pack
S9873	2T6/AMB/LED/E12/22K/120V	2	T6	E12	120	Amber	2200K	150	80	3 3/16	15K	045923098734	24/6

S9986
NEW

S9987
NEW

Decorative LED Filament Lamps

360° BEAM | DIMMABLE | ENCLOSED FIXTURE | DAMP LOCATION

Item Number	Lamp Description	W	Bulb Type	Base	V	Finish	CCT	Lm	CRI	M.O.L. (Inches)	Life/ Hrs.	UPC	Pack
S9986	3.5CTA/AMB/LED/22K/120V	3.5	C11	E12	120	Amber	2200K	300	80	4 5/16	15K	045923099861	24/6
S9987	3.5CFA/AMB/LED/22K/120V	3.5	CA11	E12	120	Amber	2200K	300	80	5	15K	045923099878	24/6

Available January 2017

Copyright © 2016
Satco Products, Inc
All Rights Reserved.
11/16 SA1980

National Toll-Free:
800-43-SATCO
(800-437-2826)
www.satco.com

Distribution Centers:
New York, Florida,
Texas, Washington,
California, Puerto Rico

Satco Products Inc.
110 Heartland Blvd.,
Brentwood, NY 11717
PH 631-243-2022
FX 631-243-2027

SATCO® | NUVO® LIGHTING

BLINK™ LED FIXTURES

customer service 1-800-43-SATCO

Sleek design.
LED efficiency.
Easy installation.

Meet Blink

So simple, so innovative, and perfect for so many projects. That's Blink. Sleek, efficient and easy to install. Blink again. It's the LED fixture you always needed with the features you always wanted.

Blink LED fixtures come in the sizes, shapes, finishes and specifications that make solving most any lighting problem easy. No room for a recessed can fixture? No problem. If there's only a 3" or 4" junction box or a pancake box to work with, mounting is simple, and Blink is your LED lighting solution. And there's no need for a fire box enclosure. Blink's ultra-sleek design – only 1" deep – makes it the answer for all those hard to light spaces.

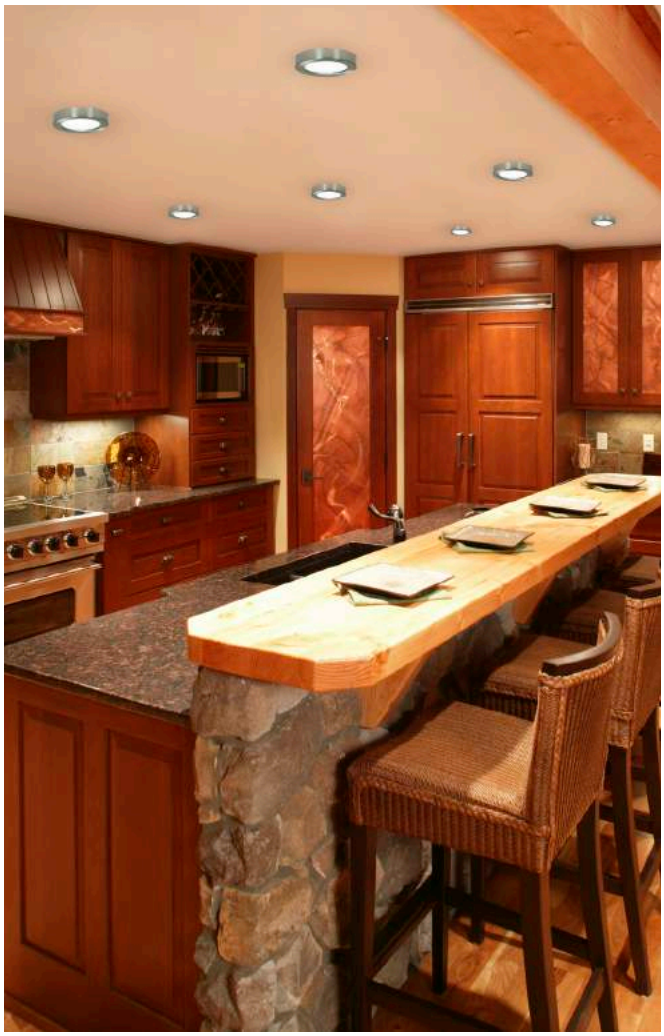

From dramatic to functional…

Blink is perfectly suited for both residential and commercial applications. Light an office or conference room properly for better working conditions, or dim a restaurant lounge area for the right mood. It's hard to find a space that wouldn't benefit from Blink fixtures.

Blink offers more than just energy savings. Its dimmable and its wide, 108° beam pattern and edge-lit LED technology means less fixtures to install. It's perfect for kitchens, bathrooms, hallways, family rooms, even garages. And virtually any kind of commercial space--offices buildings, hotels, restaurants, condominiums and apartments, in conference rooms, hallways, entry ways, bar and lounge areas, and stairwells can benefit from the energy savings and lower maintenance costs Blink LEDs deliver.

The opportunities are endless

There's almost no limit to the ways Blink can add dramatic affects, efficiency and safety to any residence or complex--and do it cleanly and simply.

With so many sizes, wattages, color temperatures and finishes to choose from, finding a Blink LED fixture for most any installation is easy.

Choosing the right Blink is easy

Blink is available in 5.5", 7" and 9" square or round models and 13" round models. All are available in White, Brushed Nickel or Bronze finishes. And all models are ENERGY STAR certified.

Battery backup modules – added security where you need it most

Blink battery backup modules are designed to work with the 7" & 9" round or square models, are available in White and come with a 3rd wire for switched applications.

Blink battery backup modules add a level of security to an already versatile product. This advanced module features 90 minutes of operation from the battery, and is self-charging with a 24 hour recharge time and overcharge/discharge protection. It has a 1-second switching time, self-checking function and a test button. Battery backup modules are perfect for critical locations in any home or commercial establishment where and extra measure of safety is needed or required.

Wet location?

The Blink wet locations models make lighting bathrooms and other damp locations easy. All the necessary certifications are in place allowing for installation almost anywhere. The wet location models are available in 7" round, 7" square and 9" square, all finished in White.

No problem.

Blink LED fixtures

Features at a glance

- Dimmable**
- Damp location listed
- Available in White, Brushed Nickel, and Bronze
- Mounts directly to 3" and 4" junction boxes
- ENERGY STAR® certified as indicated
- 5 year limited warranty***

** Consult Satco or visit www.satco.com for an up to date dimmer compatibility list.
*** See separate warranty for complete terms and conditions.

5.5" LED round fixtures

S9320, S9323

S9321, S9359

S9322

5.5" LED Round Fixture

Item Number	Lamp Description	W	V	Finish	CRI	CCT	Lm	Bm	M.O.L. (Inches)	Life/ Hrs.	UPC	Pack/ Mstr.
S9320*	10.5W/LED/5.5FLUSH/27K/RD/WH	10.5	120	White	↑80	2700K	580	108°	1	40K	045923093203	12/1
S9321*	10.5W/LED/5.5FLUSH/27K/RD/BN	10.5	120	Br. Nickel	↑80	2700K	580	108°	1	40K	045923093210	12/1
S9322*	10.5W/LED/5.5FLUSH/27K/RD/BRZ	10.5	120	Bronze	↑80	2700K	580	108°	1	40K	045923093227	12/1
S9323*	10.5W/LED/5.5FLUSH/30K/RD/WH	10.5	120	White	↑80	3000K	600	108°	1	40K	045923093234	12/1
S9359*	10.5W/LED/5.5FLUSH/30K/RD/BN	10.5	120	Br. Nickel	↑80	3000K	600	108°	1	40K	045923093593	12/1

5.5" LED square fixtures

S9324, S9327

S9325

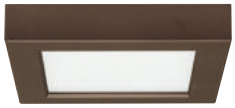

S9326

5.5" LED Square Fixture

Item Number	Lamp Description	W	V	Finish	CRI	CCT	Lm	Bm	M.O.L. (Inches)	Life/ Hrs.	UPC	Pack/ Mstr.
S9324*	10.5W/LED/5.5FLUSH/27K/SQ/WH	10.5	120	White	↑80	2700K	580	108°	1	40K	045923093241	12/1
S9325*	10.5W/LED/5.5FLUSH/27K/SQ/BN	10.5	120	Br. Nickel	↑80	2700K	580	108°	1	40K	045923093258	12/1
S9326*	10.5W/LED/5.5FLUSH/27K/SQ/BRZ	10.5	120	Bronze	↑80	2700K	580	108°	1	40K	045923093265	12/1
S9327*	10.5W/LED/5.5FLUSH/30K/SQ/WH	10.5	120	White	↑80	3000K	600	108°	1	40K	045923093272	12/1

7" LED round fixtures

S9328, S9331, S9360, S9364, S9367, S9357

S9329, S9349

S9330

7" LED Round Fixture

Item Number	Lamp Description	W	V	Finish	CRI	CCT	Lm	Bm	M.O.L. (Inches)	Life/ Hrs.	UPC	Pack/ Mast.
S9328*	13.5W/LED/7FLUSH/27K/RD/WH	13.5	120	White	↑80	2700K	800	108°	1	40K	045923093289	12/1
S9329*	13.5W/LED/7FLUSH/27K/RD/BN	13.5	120	Br. Nickel	↑80	2700K	800	108°	1	40K	045923093296	12/1
S9330*	13.5W/LED/7FLUSH/27K/RD/BRZ	13.5	120	Bronze	↑80	2700K	800	108°	1	40K	045923093302	12/1
S9331*	13.5W/LED/7FLUSH/30K/RD/WH	13.5	120	White	↑80	3000K	820	108°	1	40K	045923093319	12/1
S9349*	13.5W/LED/7FLUSH/30K/RD/BN	13.5	120	Br. Nickel	↑80	3000K	820	108°	1	40K	045923093494	12/1
S9360*	13.5W/LED/7FLUSH/50K/RD/WH	13.5	120	White	↑80	5000K	900	108°	1	40K	045923093609	12/1
Wet Location / 90 CRI												
S9364*	13.5W/LED/7FLUSH/30K/RD/WH/90CRI	13.5	120	White	↑90	3000K	820	108°	1	40K	045923093647	12/1
0-10V Dimming												
S9367*	13.5W/LED/7FLUSH/30K/RD/WH/0-10VD	13.5	120	White	↑80	3000K	820	108°	1	40K	045923093678	12/1
277 Volt												
S9357*	13.5W/LED/7FLUSH/30K/RD/WH/277V	13.5	277	White	90	3000K	745	108°	1 ⅝	40K	045923093579	12/1

7" LED square fixtures

S9332, S9335, S9361, S9366

S9333

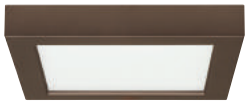

S9334

7" LED Square Fixture

Item Number	Lamp Description	W	V	Finish	CRI	CCT	Lm	Bm	M.O.L. (Inches)	Life/ Hrs.	UPC	Pack/ Mast.
S9332*	13.5W/LED/7FLUSH/27K/SQ/WH	13.5	120	White	↑80	2700K	780	108°	1	40K	045923093326	12/1
S9333*	13.5W/LED/7FLUSH/27K/SQ/BN	13.5	120	Br. Nickel	↑80	2700K	780	108°	1	40K	045923093333	12/1
S9334*	13.5W/LED/7FLUSH/27K/SQ/BRZ	13.5	120	Bronze	↑80	2700K	780	108°	1	40K	045923093240	12/1
S9335*	13.5W/LED/7FLUSH/30K/SQ/WH	13.5	120	White	↑80	3000K	800	108°	1	40K	045923093357	12/1
S9361*	13.5W/LED/7FLUSH/50K/SQ/WH	13.5	120	White	↑80	5000K	880	108°	1	40K	045923093616	12/1
Wet Location / 90 CRI												
S9366*	13.5W/LED/7FLUSH/30K/SQ/WH/90CRI	13.5	120	White	↑90	3000K	800	108°	1	40K	045923093661	12/1

9" LED round fixtures

S9336, S9339, S9362, S9358

S9337, S9379

S9338

9" LED Round Fixture

Item Number	Lamp Description	W	V	Finish	CRI	CCT	Lm	Bm	M.O.L. (Inches)	Life/ Hrs.	UPC	Pack/ Mast.
S9336*	18.5W/LED/9FLUSH/27K/RD/WH	18.5	120	White	↑80	2700K	1150	108°	1	40K	045923093364	12/1
S9337*	18.5W/LED/9FLUSH/27K/RD/BN	18.5	120	Br. Nickel	↑80	2700K	1150	108°	1	40K	045923093371	12/1
S9338*	18.5W/LED/9FLUSH/27K/RD/BRZ	18.5	120	Bronze	↑80	2700K	1150	108°	1	40K	045923093388	12/1
S9339*	18.5W/LED/9FLUSH/30K/RD/WH	18.5	120	White	↑80	3000K	1200	108°	1	40K	045923093395	12/1
S9379*	18.5W/LED/9FLUSH/30K/RD/BN	18.5	120	Br. Nickel	↑80	3000K	1200	108°	1	40K	045923093791	12/1
S9362*	18.5W/LED/9FLUSH/50K/RD/WH	18.5	120	White	↑80	5000K	1300	108°	1	40K	045923093623	12/1
277 Volt												
S9358*	18.5W/LED/9FLUSH/30K/RD/WH/277V	18.5	277	White	90	3000K	1110	108°	1 ⅝	40K	045923093586	12/1

9" LED square fixtures

S9340, S9343, S9363, S9365

S9341

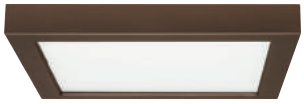

S9342

9" LED Square Fixture

Item Number	Lamp Description	W	V	Finish	CRI	CCT	Lm	Bm	M.O.L. (Inches)	Life/ Hrs.	UPC	Pack/ Mast.
S9340*	18.5W/LED/9FLUSH/27K/SQ/WH	18.5	120	White	↑80	2700K	1100	108°	1	40K	045923093401	12/1
S9341*	18.5W/LED/9FLUSH/27K/SQ/BN	18.5	120	Br. Nickel	↑80	2700K	1100	108°	1	40K	045923093418	12/1
S9342*	18.5W/LED/9FLUSH/27K/SQ/BRZ	18.5	120	Bronze	↑80	2700K	1100	108°	1	40K	045923093425	12/1
S9343*	18.5W/LED/9FLUSH/30K/SQ/WH	18.5	120	White	↑80	3000K	1150	108°	1	40K	045923093432	12/1
S9363*	18.5W/LED/9FLUSH/50K/SQ/WH	18.5	120	White	↑80	5000K	1250	108°	1	40K	045923093630	12/1
Wet Location / 90 CRI												
S9365*	18.5W/LED/9FLUSH/30K/SQ/WH/90CRI	18.5	120	White	↑90	3000K	1150	108°	1	40K	045923093654	12/1

13" LED round fixtures

S9650

S9651

S9652

13" LED Round Fixture

Item Number	Lamp Description	W	V	Finish	CRI	CCT	Lm	Bm	M.O.L. (Inches)	Life/ Hrs.	UPC	Pack/ Mast.
S9650*	25W/LED/13FLUSH/30K/RD/WH	25	120	White	80	3000K	1800	108°	1	40K	045923096501	4/1
S9651*	25W/LED/13FLUSH/30K/RD/BN	25	120	Br. Nickel	80	3000K	1800	108°	1	40K	045923096518	4/1
S9652*	25W/LED/13FLUSH/30K/RD/BRZ	25	120	Bronze	80	3000K	1800	108°	1	40K	045923096525	4/1

Blink LED rectangular fixtures

S9368 (5" x 18")

S9369 (7" x 18")

DIMMABLE DAMP LOCATION * ENERGY STAR

5" x 18" LED Rectangular Fixture

Item Number	Lamp Description	W	V	Finish	CRI	CCT	Lm	Bm	M.O.L. (Inches)	Life/ Hrs.	UPC	Pack/ Mstr.
S9368*	16W/LED/18"FLUSH/30K/90CRI/REC	16	120	White	↑90	3000K	950	108°	1	40K	045923093685	6/1
7" x 18" LED Rectangular Fixture												
S9369*	24W/LED/18"FLUSH/30K/90CRI/REC	24	120	White	↑90	3000K	1300	108°	1	40K	045923093692	6/1

Blink battery backup modules

Features at a glance

- 24 hour recharge time
- 90 minute operation from battery
- Switching time: < 1 second
- Over-charge / discharge protection
- Self-checking function
- Test button

7" & 9" battery backups

S9344, S9346

S9345, S9347

S9656, S9657

S9658, S9659

7" LED Round Battery Back Up

Item Number	Description	UPC	Pack/ Mstr.
S9344	7" Round Battery Back Up - White	045923093449	12/1
S9346	7" Round Battery Back Up - Empty Casing* - White	045923093463	12/1
S9653	7" Round Battery Backup - Brushed Nickel	045923096532	12/1
S9654	7" Round Battery Backup - Empty Casing* - Brushed Nickel	045923096549	12/1
7" LED Square Battery Backup			
S9345	7" Square Battery Backup - White	045923093456	12/1
S9347	7" Square Battery Backup - Empty Casing* - White	045923093470	12/1

Battery backup module and Blink fixture sold separately.
* Used to maintain consistent appearance with Blinks utilizing the battery back up.

9" LED Round Battery Backup

Item Number	Description	UPC	Pack/ Mstr.
S9656	9" Round Battery Backup - White	045923096563	12/1
S9657	9" Round Battery Backup - Empty Casing* - White	045923096570	12/1
9" LED Square Battery Backup			
S9658	9" Square Battery Backup - White	045923096587	12/1
S9659	9" Square Battery Backup - Empty Casing* - White	045923096594	12/1

Battery backup module and Blink fixture sold separately.
* Used to maintain consistent appearance with Blinks utilizing the battery back up.

Blink technology-- simplicity is only skin deep

Blinks clean, simple design and thin profile belies the advanced technologies inside. The edge-lit LED design provides even, efficient light over a wide area through a laminated light guide assembly made of high quality polymer for the highest efficiency and safety. And advanced, on-board IC direct drive technology means there are no external drivers allowing for Blink's sleek design and making wiring easy.

Light Distribution

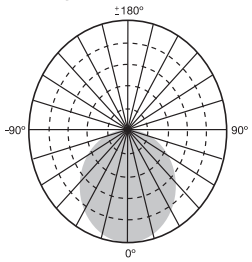

108°

On-board IC drive technology – no external driver needed

Edge-lit design eliminates hot spots and provides even light output

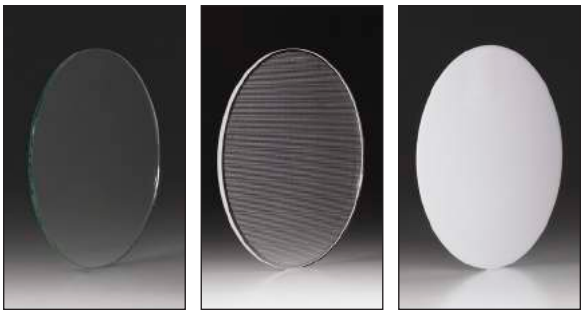

Laminated light guide assembly for consistent light dispersion, (glass, pattern disk and diffuser)

Installation is easy (5.5", 7", 9")

Blink LED fixtures mount easily to any 3" or 4" junctions box. The Blink quick connect makes connections easy, and the universal mounting plate assures a clean, tight fit.

Blink quick connect

STEP 1

Simply screw the Blink universal mounting plate to the junction box.

STEP 2

Make your connections using the quick connect included, and lift into place.

STEP 3

Snap Blink onto the mounting plate.

Copyright © 2017
Satco Products, Inc.
All Rights Reserved.
2/17 SA1696

National Toll-Free:
800-43-SATCO
(800-437-2826)
www.satco.com

Distribution Centers:
New York, Florida,
Texas, Washington,
California, Puerto Rico

Satco Products Inc.
110 Heartland Blvd.,
Brentwood, NY 11717
PH 631-243-2022
FX 631-243-2027

ARCHITECTURAL LED FIXTURES

SATCO® | NUVO® LIGHTING

The next standard in quality and efficiency.

Architectural LED lighting from Nuvo Lighting.

Building codes everywhere set minimum safety standards for the lighting of virtually every structure. The Nuvo architectural LED line will certainly meet those standards, but do it more efficiently. LED lighting can save up to 80% on utility costs verses older technologies and still provide the lighting needed for offices, parking garages, warehouses, indoor or out.

Nuvo architectural LED fixtures are keeping venues everywhere safe and efficiently lit using the best electrical components, materials and overall fixture engineering available.

50 Years of lighting leadership

Nuvo Lighting set out with the belief that good value should also be technologically advanced, manufactured to the highest standards and suitable for projects large or small. With that goal, and 50 years of Satco's Lighting's experience behind it, Nuvo lighting has become one of the leaders in fixture design and technology. It's the reason our product line, and business, has grown every year since.

Get to know Nuvo. Lighting that's more than meets the eye.

On the cover: Nuvo Lighting's 58W LED low profile canopy fixture with bronze finish and glare free lens, (page 64).

Build quality, inside and out

We start with tight engineering standards, then incorporate the best materials for each fixture based on purpose. The same holds true for our internal components--the best quality circuitry will do the best job

Advanced driver & component technology

Consistent power conversion management allows Nuvo drivers to negotiate power inconsistencies with complete reliability.

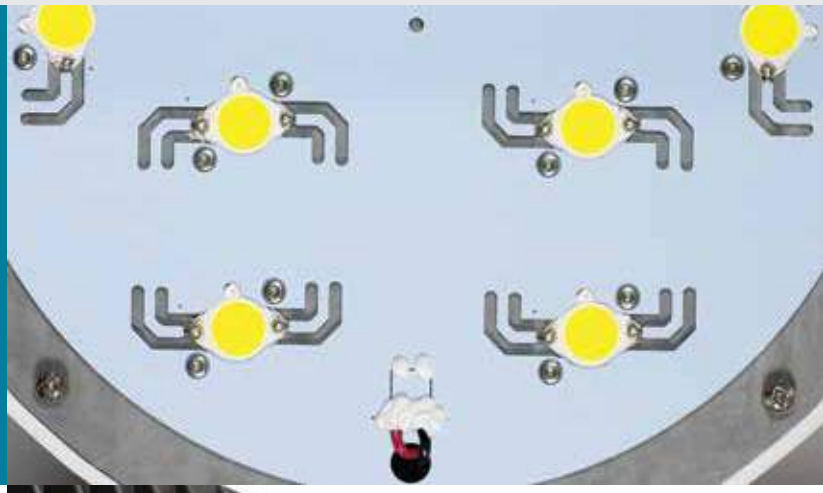

Color consistency

LED to LED, fixture to fixture, Nuvo holds exact color consistency. Color shift over the life of the fixture is virtually undetectable.

Superior thermal management

The key to long LED life is temperature. LED's last longer when cool. Our thermal designs optimize heat dissipation and air flow allowing the LEDs and their drivers to last longer.

Optimized optics

Lens assemblies are designed to deliver pure LED light with maximum efficiency. Well-designed optics mean better control of light delivery and our precision engineered lenses yield smooth, clear light without hot spots or glare.

Quality is built-in

Nuvo architectural fixtures go through stringent quality assurance testing. From photometric testing to UV testing to aging tests under harsh conditions, our fixtures are designed to meet or exceed industry standards. Testing includes LM-79, LM-80, DLC, ENERGY STAR®, FCC, UL CE and Cree TEMPO21.

5 YEARS

5 Year warranty

Nuvo confidently warranties our architectural fixtures for 5 years from any defects in materials or workmanship. Warranty details are available at www.nuvolighitng.com and in each fixture package.

Rugged enclosures and lenses

Our fixtures are IP65 rated and engineered with harsh environments in mind. Our architectural fixture enclosures will stand the test of time every season, year after year. Our die-cast aluminum UV-stabilized powder coated enclosures and anodized aluminum reflectors will hold their finish and are vibration resistant. And the high-impact tempered glass or borosilicate glass lenses will retain clarity for even light distribution over the life of the fixture.

Highly efficient

Nuvo LED architectural fixtures are the smart replacement for incandescent, HID and compact fluorescent lighting. Their efficiency is dramatic – 3 to 4 times the life of metal halide or fluorescent, 10 times the life of incandescent and energy use reductions of 50 -80%. And they're environmentally friendly –safer disposal and a smaller carbon footprint. They are instant-on and restart to full power.

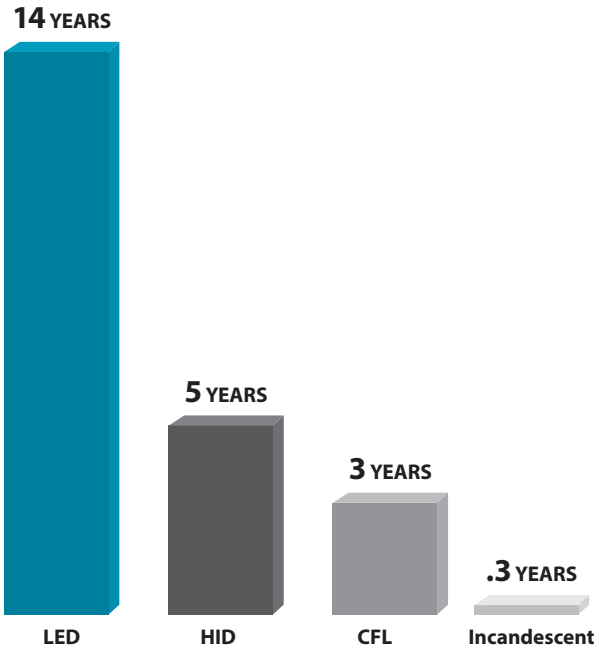

Quick-mount system – a built-in level makes mounting wall fixtures simple.

Advanced thermal management ensures cool operation and long life.

Quick-mount system – ceiling fixtures are easier to wire with our integrated hinged mounting plate.

Built-in beam angle adjustments on model 65-077 offer directional flexibility.

Tamper resistant screws for added security.

High-impact lenses are designed for maximum, even light distribution while standing up to extreme environmental conditions.

Rugged enclosures are built to withstand the elements, year after year.

Advanced, high quality circuitry and drivers ensure years of trouble-free operation.

24W LED Dual Head Security Light
with or without Motion Sensor

Bronze or White Finish / Impact Resistant Lens

Our 24 Watt, LED dual-head security light is compact, yet powerful, delivering 2000 Lumens of clean LED light at 4000K. Both heads are adjustable making this fixture the perfect choice where wider or multiple beam angles are required. It will stand up to the elements with its die-cast aluminum body and clear impact-resistant lenses. They meet all safety standards, are wet location listed and are finished in UV stabilized powder coated bronze or white. These fixtures are perfect for entryways, walkways, wider spaces and other outdoor gathering spots and are available with or without a motion sensor. And they will save energy and maintenance costs for many years.

Item no. **65-094**
Item no. **65-093** (without motion sensor)

Features:

- ENERGY STAR Certified
- ETL listed
- Dual die-cast heads with clear plastic impact resistant lenses
- Wall mounted recessed junction box required
- Meets all product safety standards
- Suitable for wet locations
- Ideal for patio and entrance lighting
- 5 Year warranty

Item no. **65-107**
Item no. **65-108** (with motion sensor)

Specifications:

- 24W
- 2,000 Lumens*
- 120~277V
- 4000K
- 75+ CRI
- 70-100W MH Equivalent
- Operating temperature: –25°C to 40°C
- 50,000 Hour life

Motion Sensor Specifications:

- 1Time setting: Min 5 sec, Max 9 min ± 1min
- Detection angle: 180°
- Detection range: 12m (22~24)°C
- Light-control: 10LUX~2000LUX

Dimensions

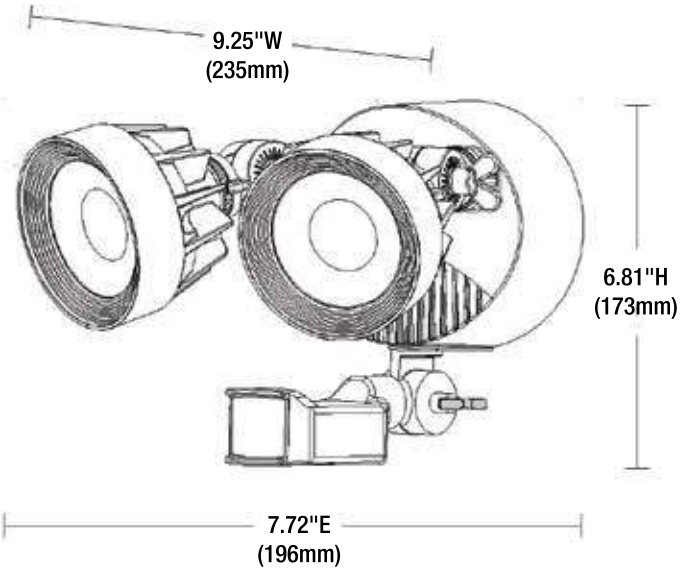

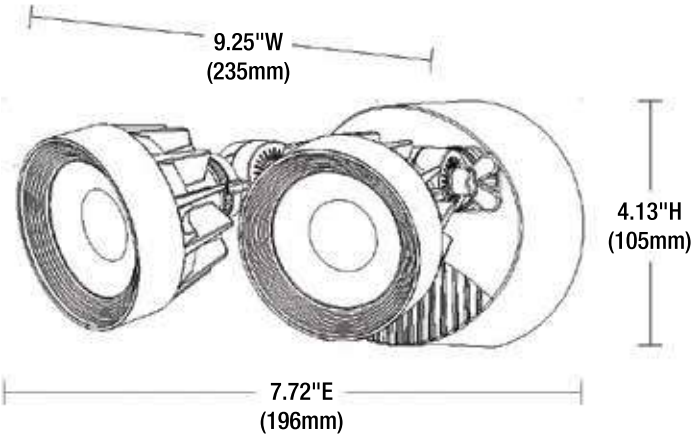

Photometrics

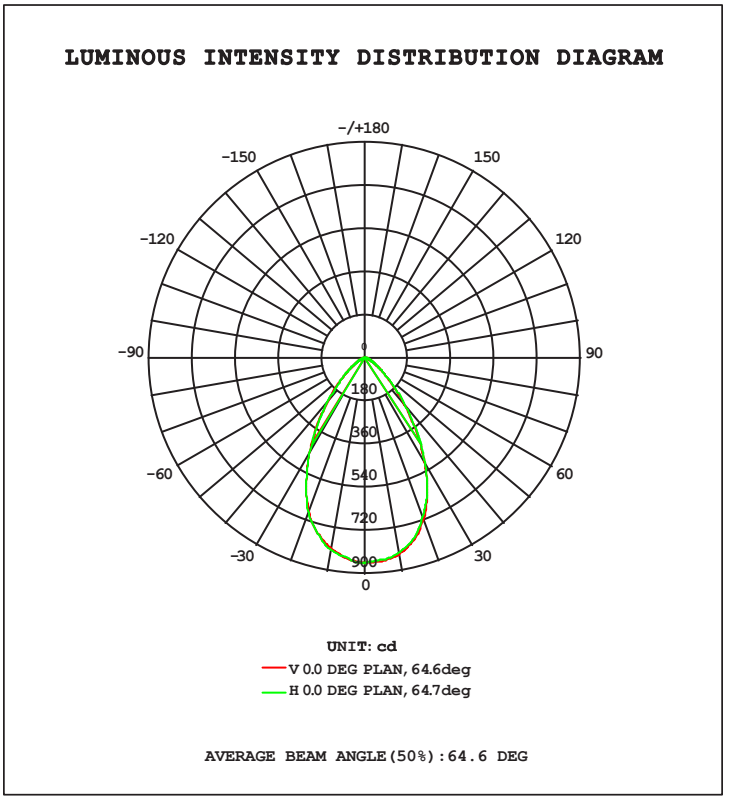

24W LED Single Head Security Light

ENERGY STAR · WET LOCATION · RoHS COMPLIANT

Item#	Description	Watts	Volts	CRI	CCT	Total Lumens*	Lumens / Watt	Width	Height	Ext.	Equivalent
65-093	LED DUAL HEAD SECURITY LIGHT 24W BRONZE	24	120~277	↑75	4000K	2,000	83	9.25"	4.13"	7.72"	70-100W MET. HAL.
65-094	LED DUAL HEAD SECURITY LIGHT 24W BRONZE WITH MOTION SENSOR	24	120~277	↑75	4000K	2,000	83	9.25"	6.81"	7.72"	70-100W MET. HAL.
65-107	LED DUAL HEAD SECURITY LIGHT 24W WHITE	24	120~277	↑75	4000K	2,000	83	9.25"	4.13"	7.72"	70-100W MET. HAL.
65-108	LED DUAL HEAD SECURITY LIGHT 24W WHITE WITH MOTION SENSOR	24	120~277	↑75	4000K	2,000	83	9.25"	6.81"	7.72"	70-100W MET. HAL.

* Lumens measured at LED source

Pack: 4

14W LED Single Head Security Light
with or without Motion Sensor

Bronze or White Finish / Impact Resistant Lens

The Nuvo 14 Watt, LED single-head security light is compact, yet powerful, delivering 1200 Lumens of clean LED light at 4000K. It's made to stand up to the elements with its die-cast aluminum body and clear impact-resistant lens. They meet all safety standards, are wet location listed and are finished in UV stabilized powder coated bronze or white. These fixtures are perfect for entry ways, walkways and outdoor gathering spots and are available with or without a motion sensor. And they will save energy and maintenance costs for many years .

Item no. **65-092**
Item no. **65-091** (without motion sensor)

Features:

- ENERGY STAR Certified
- ETL listed
- Single die-cast head with clear plastic impact resistant lens
- Wall mounted recessed junction box required
- Meets all product safety standards
- Suitable for wet locations
- Ideal for patio and entrance lighting
- 5 Year warranty

Specifications:

- 14W
- 1,200 Lumens*
- 120~277V
- 4000K
- 75+ CRI
- 50-70W MH Equivalent
- Operating temperature: –25°C to 40°C
- 50,000 Hour life

Item no. **65-105**
Item no. **65-106** (with motion sensor)

Motion Sensor Specifications:

- 1Time setting: Min 5 sec, Max 9 min ± 1min
- Detection angle: 180°
- Detection range: 12m (22~24)°C
- Light-control: 10LUX~2000LUX

Dimensions

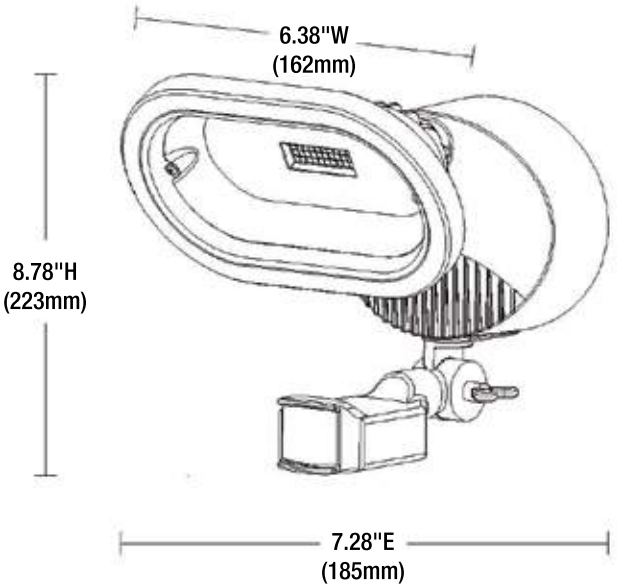

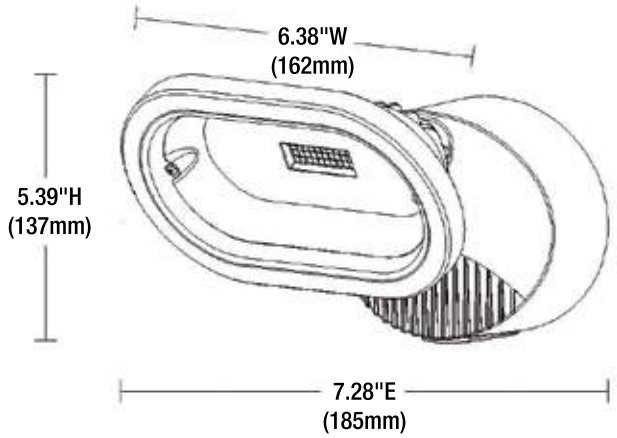

Photometrics

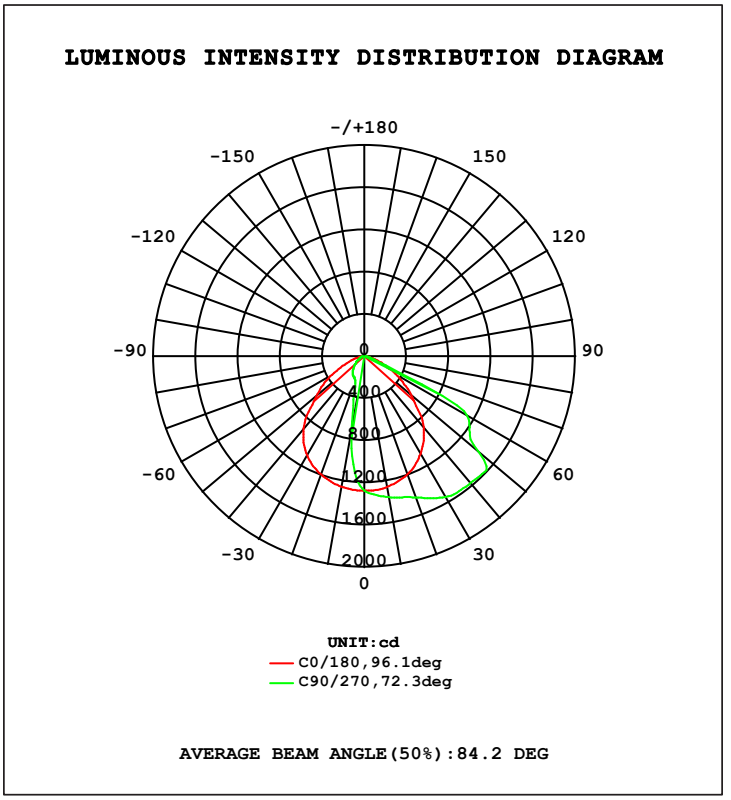

14W LED Single Head Security Light

WET LOCATION

Item#	Description	Watts	Volts	CRI	CCT	Total Lumens*	Lumens / Watt	Width	Height	Ext.	Equivalent
65-091	LED SINGLE HEAD SECURITY LIGHT 14W BRONZE	14	120~277	↑75	4000K	1,200	85	6.38"	5.39"	7.28"	50-70W MET. HAL.
65-092	LED SINGLE HEAD SECURITY LIGHT 14W BRONZE WITH MOTION SENSOR	14	120~277	↑75	4000K	1,200	85	6.38"	8.78"	7.28"	50-70W MET. HAL.
65-105	LED SINGLE HEAD SECURITY LIGHT 14W WHITE	14	120~277	↑75	4000K	1,200	85	6.38"	5.39"	7.28"	50-70W MET. HAL.
65-106	LED SINGLE HEAD SECURITY LIGHT 14W WHITE WITH MOTION SENSOR	14	120~277	↑75	4000K	1,200	85	6.38"	8.78"	7.28"	50-70W MET. HAL.

* Lumens measured at LED source

Pack: 4

11W LED Wall Mount Door / Corridor Fixture
with or without Photo Control

Bronze Finish / Polycarbonate Diffuser

Our 11 LED Watt wall-mount door and corridor LED fixtures combine design simplicity and functionality. The prismatic polycarbonate diffuser ensures brilliant illumination and the quick-mount installation is simple. Long-lasting LED performance saves energy and maintenance costs. They have a rugged, die-cast aluminum body and are IP65 rated, wet location listed making them perfect for most any installation, indoors or out. Finished in UV stabilized powder coated Bronze and available with or without photocell.

Features:

- DLC and UL listed
- IP65 Rated enclosure
- Die-cast aluminum body
- UV stabilized powder coated finish
- Quick mount installation
- Suitable for wet locations
- High impact polycarbonate diffuser
- Photo control option – On at dusk / Off at dawn
- 5 Year warranty

Specifications:

- 11W
- 828 Lumens*
- 120~277V (without photocell)
- 5000K
- 75+ CRI
- 50-70W MH Equivalent
- Operating temperature: –40°C to 40°C
- 50,000 Hour life

Item no. **65-050**
Item no. **65-051** with photocell

Dimensions

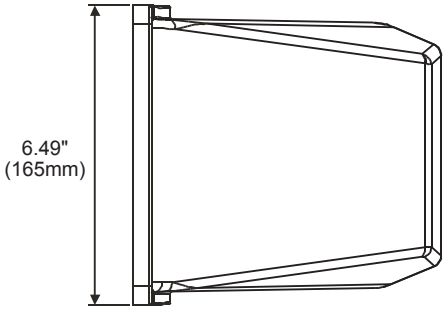

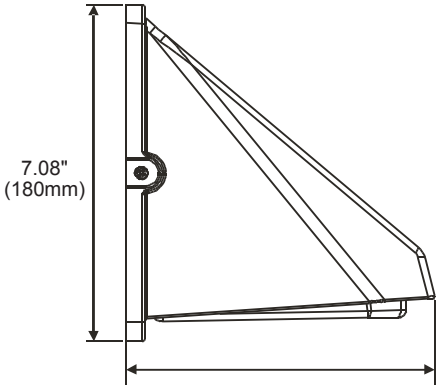

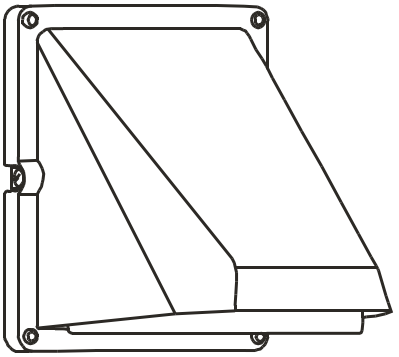

Photometrics

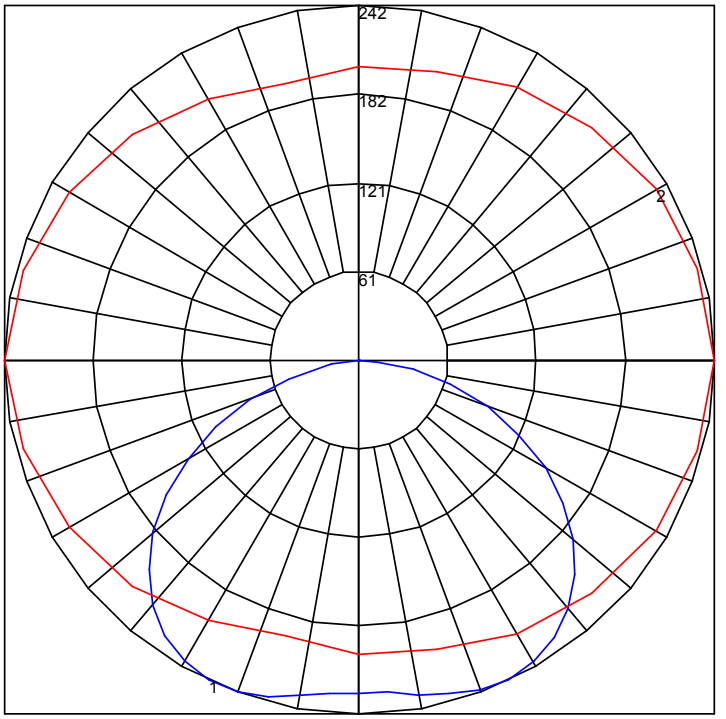

Maximum Candela = 242.35 Located At Horizontal Angle = 180, Vertical Angle = 25
1 - Vertical Plane Through Horizontal Angles (180 - 0) (Through Max. Cd.)
2 - Horizontal Cone Through Vertical Angle (25) (Through Max. Cd.)

11W Wall Mount LED

c UL us LISTED WET LOCATION

Item#	Description	Watts	Volts	CRI	CCT	Total Lumens*	Lumens / Watt	Width	Height	Ext.	Equivalent
65-050	LED WALL PACK 11W BRONZE/ POLYCARBONATE DIFFUSER	11.29	120~277	↑75	5000K	828	73	6.49"	7.08"	6.49"	50-70W MET. HAL.
65-051	LED WALL PACK 11W - PHOTO CELL BRONZE/POLYCARBONATE DIFFUSER	11.29	120	↑75	5000K	828	73	6.49"	7.08"	6.49"	50-70W MET. HAL.

* Lumens measured at LED source

Pack: 6

13W LED Wall Mount Door / Corridor Fixture
with or without Photo Control

Bronze Finish / Polycarbonate Diffuser

Our 13W wall-mount door and corridor LED fixtures are both rugged and efficient. The high impact frosted polycarbonate diffuser ensures brilliant illumination and the quick-mount installation is simple. Long-lasting LED performance saves energy and maintenance costs. They boast a rugged, die-cast aluminum body and are IP65 rated, CUL listed for wet locations making them perfect for any outdoor application. Replace old fashioned "jelly jar" incandescent fixtures with this high efficiency LED fixture. Finished in UV stabilized Bronze and available with or without photocell.

Features:

- UL listed
- IP65 Rated enclosure
- Die-cast aluminum body
- UV stabilized powder coated finish
- Quick mount installation
- Suitable for wet locations
- High impact polycarbonate diffuser
- Photo control option – On at dusk / Off at dawn
- 5 Year warranty

Specifications:

- 14W
- 761 Lumens*
- 120~277V (without photocell)
- 5000K
- 75+ CRI
- 50-70W MH Equivalent
- Operating temperature: –40°C to 40°C
- 35,000 Hour life

Item no. **65-052**
Item no. **65-053** with photocell

Dimensions

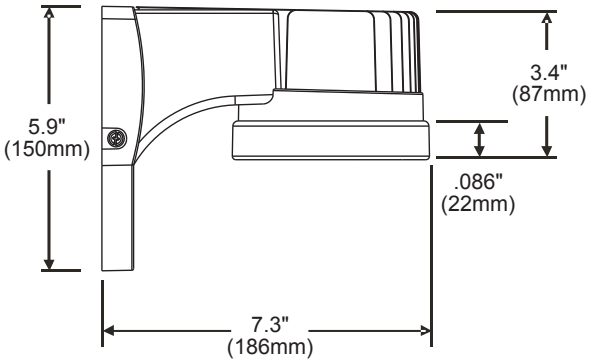

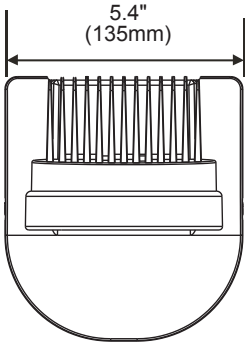

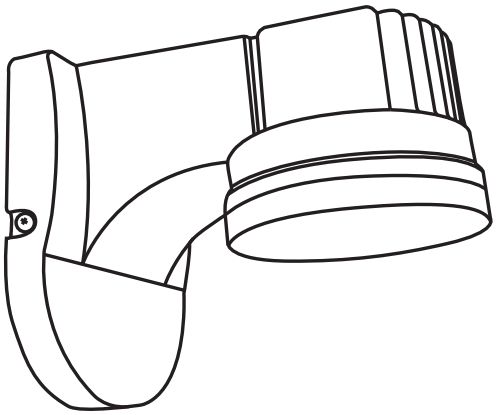

Photometrics

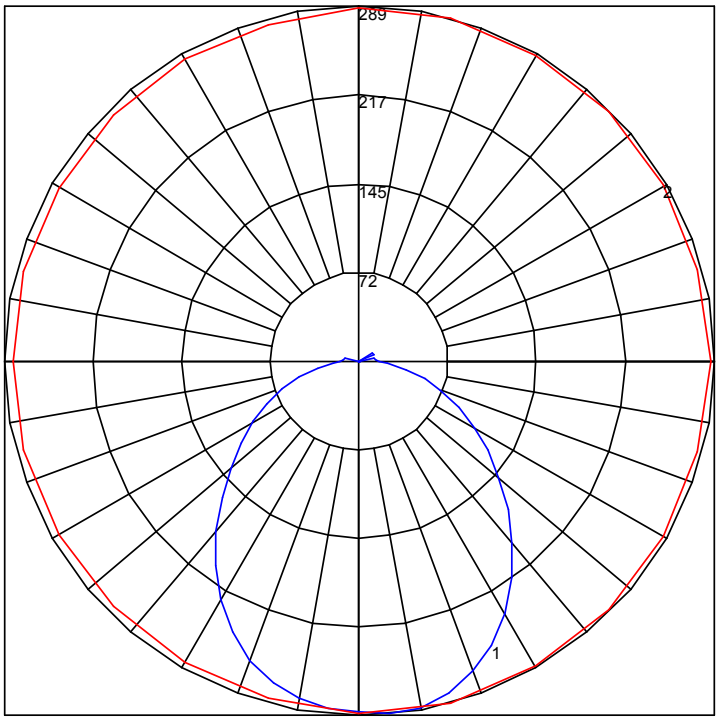

Maximum Candela = 289.16 Located At Horizontal Angle = 75, Vertical Angle = 5
1 - Vertical Plane Through Horizontal Angles (75 - 255) (Through Max. Cd.)
2 - Horizontal Cone Through Vertical Angle (5) (Through Max. Cd.)

13W Wall Mount LED

c UL us LISTED WET LOCATION

RoHS COMPLIANT

Item#	Description	Watts	Volts	CRI	CCT	Total Lumens*	Lumens / Watt	Width	Height	Ext.	Equivalent
65-052	LED WALL PACK 14W BRONZE/ POLYCARBONATE DIFFUSER	13.3	120~277	↑75	5000K	761	57	5.4"	5.9"	7.3"	50-70W MET. HAL.
65-053	LED WALL PACK 14W - PHOTO CELL BRONZE/POLYCARBONATE DIFFUSER	13.3	120	↑75	5000K	761	57	5.4"	5.9"	7.3"	50-70W MET. HAL.

* Lumens measured at LED source

Pack: 6

20W LED ADJUSTABLE WALL PACK

with or without Photo Control

Bronze Finish

Our LED adjustable wall packs offer both versatility and efficiency. They deliver efficient LED light at high Lumen levels to a wider variety of applications due to their adjustable head. And each wattage is available with or without a photocell for enhanced security. The rugged cast aluminum body is finished in UV stabilized powder coated bronze and fitted with an impact resistant lens to stand up to most any weather. They are IP65 rated, suited for wet locations and meet all safety regulations. They are dark sky friendly, and deliver long life, high efficiency and lower maintenance costs.

Features:

- DLC and ETL Listed
- Dark sky friendly
- IP65 Rated enclosure
- Die cast aluminum housing with hinged front frame
- Suitable for wet locations
- Enhanced security photcell option – On at dusk / Off at dawn
- Adjustable fixture head angle (0-90°)
- 5 Year warranty

Specifications:

- 20W
- 1,800 Lumens*
- 120~277V
- 5000K
- 75+ CRI
- 70-100W MH Equivalent
- Operating temperature: –25°C to 40°C
- 50,000 Hour life

Item no. **65-101**

Item no. **65-102** with photocell

Dimensions

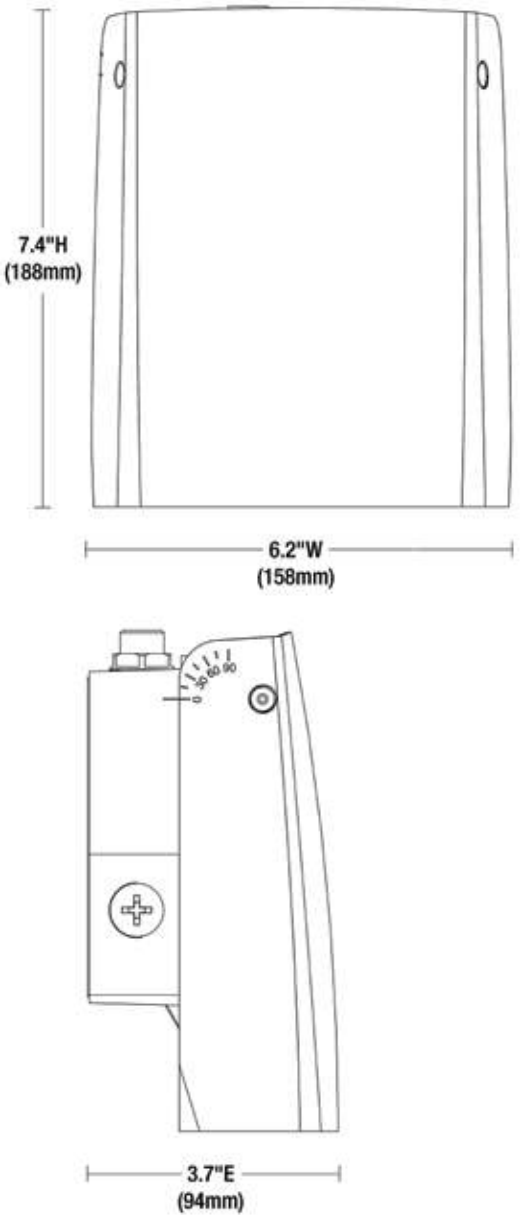

Photometrics

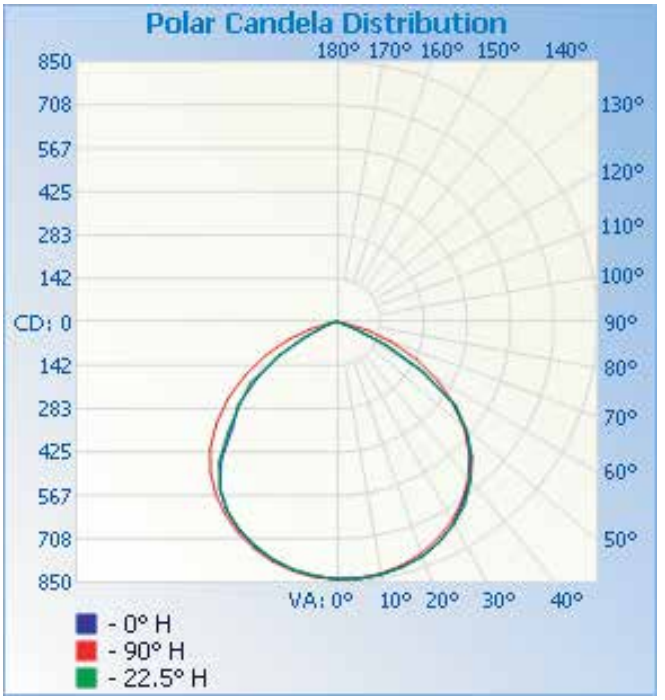

Flood Summary

	Efficiency	Lumens	Horizontal Spread	Vertical Spread
Field (10%):	6.6%	2,147.6	151.9	135.3
Beam (50%):	5.4%	1,752.3	113.5	106.5
Total:	6.8%	2,188.5		

20W Wall Mount LED

WET LOCATION

Item#	Description	Watts	Volts	CRI	CCT	Total Lumens*	Lumens / Watt	Width	Height	Ext.	Equivalent
65-101	LED ADJUSTABLE WALL PACK 20W BRONZE	20	120~277	↑75	5000K	1,800	90	6.2"	7.4"	3.7"	70-100W MET. HAL.
65-102	LED ADJUSTABLE WALL PACK 20W BRONZE WITH PHOTO CELL	20	120	↑75	5000K	1,800	90	6.2"	7.4"	3.7"	70-100W MET. HAL.

* Lumens measured at LED source

Pack: 8

30W LED ADJUSTABLE WALL PACK

with or without Photo Control

Bronze Finish

Our LED adjustable wall packs offer both versatility and efficiency. They deliver efficient LED light at high Lumen levels to a wider variety of applications due to their adjustable head. And each wattage is available with or without a photocell for enhanced security. The rugged cast aluminum body is finished in UV stabilized powder coated bronze and fitted with an impact resistant lens to stand up to most any weather. They are IP65 rated, suited for wet locations and meet all safety regulations. They are dark sky friendly, and deliver long life, high efficiency and lower maintenance costs.

Features:

- ETL Listed
- Dark sky friendly
- IP65 Rated enclosure
- Die cast aluminum housing with hinged front frame
- Suitable for wet locations
- Enhanced security photcell option – On at dusk / Off at dawn
- Adjustable fixture head angle (0-90°)
- 5 Year warranty

Specifications:

- 30W
- 2,700 Lumens*
- 120~277V
- 5000K
- 75+ CRI
- 100-150W MH Equivalent
- Operating temperature: –25°C to 40°C
- 50,000 Hour life

Item no. **65-103**

Item no. **65-104** with photocell

Dimensions

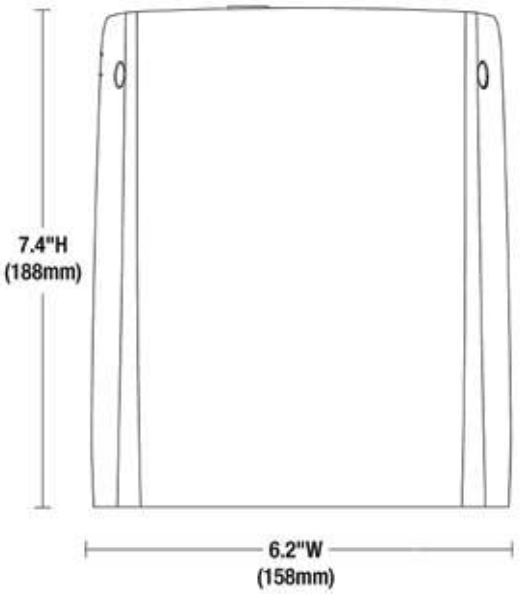

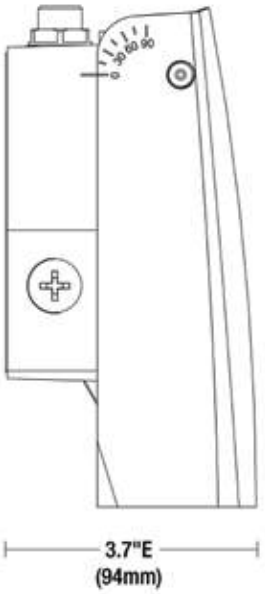

Photometrics

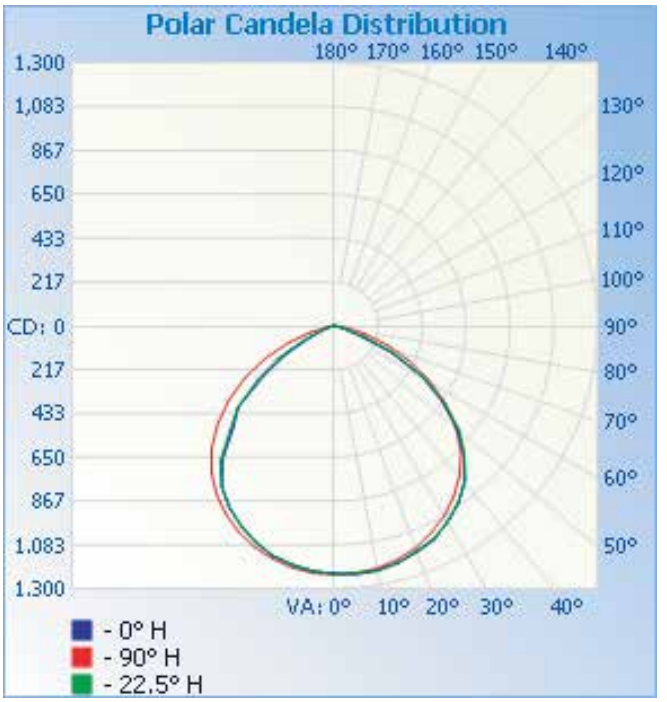

Flood Summary

	Efficiency	Lumens	Horizontal Spread	Vertical Spread
Field (10%):	143.7%	3,147.4	151.8	135.3
Beam (50%):	116.8%	2,557.2	112.9	106.2
Total:	146.6%	3,209.3		

30W Wall Mount LED

WET LOCATION

Item#	Description	Watts	Volts	CRI	CCT	Total Lumens*	Lumens / Watt	Width	Height	Ext.	Equivalent
65-103	LED ADJUSTABLE WALL PACK 30W BRONZE	30	120~277	↑75	5000K	2,700	90	6.2"	7.4"	3.7"	100-150W MET. HAL.
65-104	LED ADJUSTABLE WALL PACK 30W BRONZE WITH PHOTO CELL	30	120	↑75	5000K	2,700	90	6.2"	7.4"	3.7"	100-150W MET. HAL.

* Lumens measured at LED source

Pack: 8

11W LED Slim Wall Pack

Bronze Finish

Our 11 Watt LED slim wall pack combines superior performance in a compact housing. The adjustable head delivers 1,000 Lumens of efficient LED light at 5000K. And it's made to stand up to the outdoors with its die cast aluminum body and IP65 wet location rating. They meet all safety standards and are finished in UV stabilized powder coated bronze with an impact resistant lens. LED efficiency and being dark sky friendly makes this one of our most environmentally friendly fixtures.

Features:

- DLC and ETL listed
- Dark sky friendly
- IP65 Rated enclosure
- Die cast aluminum housing
- Suitable for wet locations
- 5 Year warranty

Specifications:

- 11W
- 1,000 Lumens*
- 120~277V
- 5000K
- 75+ CRI
- 50-70W MH Equivalent
- Operating temperature: –25°C to 40°C
- 50,000 Hour life

Item no. **65-095**

Dimensions

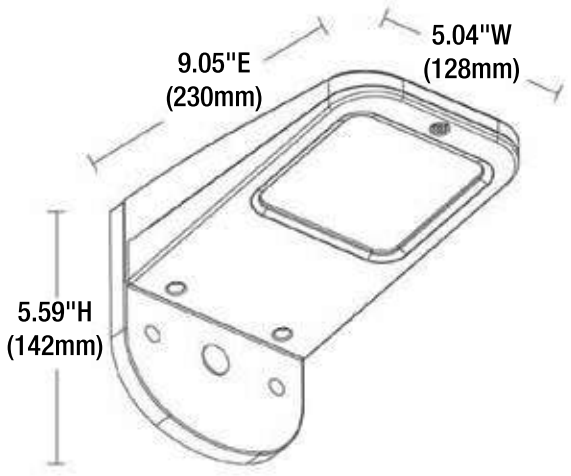

Photometrics

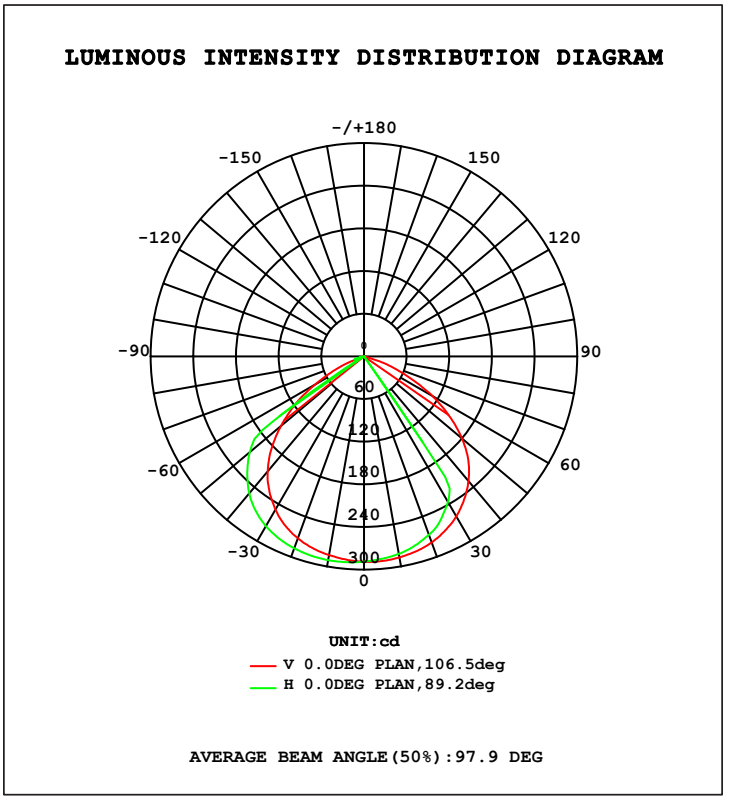

11W LED Slim Wall Pack

WET LOCATION

Item#	Description	Watts	Volts	CRI	CCT	Total Lumens*	Lumens / Watt	Width	Height	Ext.	Equivalent
65-095	LED SLIM WALL PACK 11W BRONZE	11	120~277	↑75	5000K	1,000	91	5.04"	5.59"	9.05"	50-70W MET. HAL.

* Lumens measured at LED source

Pack: 4

20W LED Slim Wall Pack

Bronze Finish

Our 20 Watt LED slim wall pack combines superior performance in a compact housing. The adjustable head delivers 1,800 Lumens of efficient LED light at 5000K. And it's made to stand up to the outdoors with its die cast aluminum body and IP65 wet location rating. They meet all safety standards and are finished in UV stabilized powder coated bronze with an impact resistant lens. LED efficiency and being dark sky friendly makes this one of our most environmentally friendly fixtures.

Features:

- DLC and ETL listed
- Dark sky friendly
- IP65 Rated enclosure
- Die cast aluminum housing
- Suitable for wet locations
- 5 Year warranty

Specifications:

- 20W
- 1,800 Lumens*
- 120~277V
- 5000K
- 75+ CRI
- 70-100W MH Equivalent
- Operating temperature: –25°C to 40°C
- 50,000 Hour life

Item no. **65-096**

Dimensions

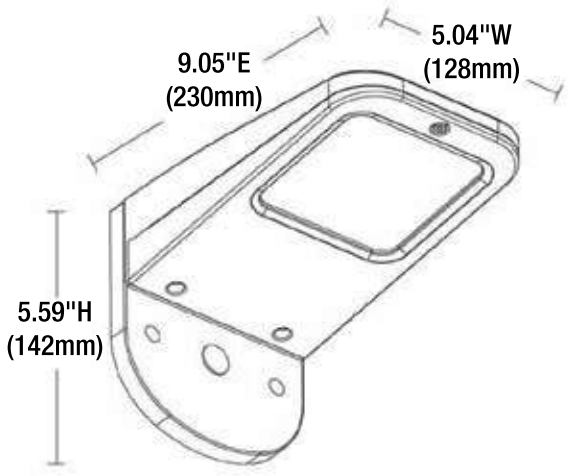

Photometrics

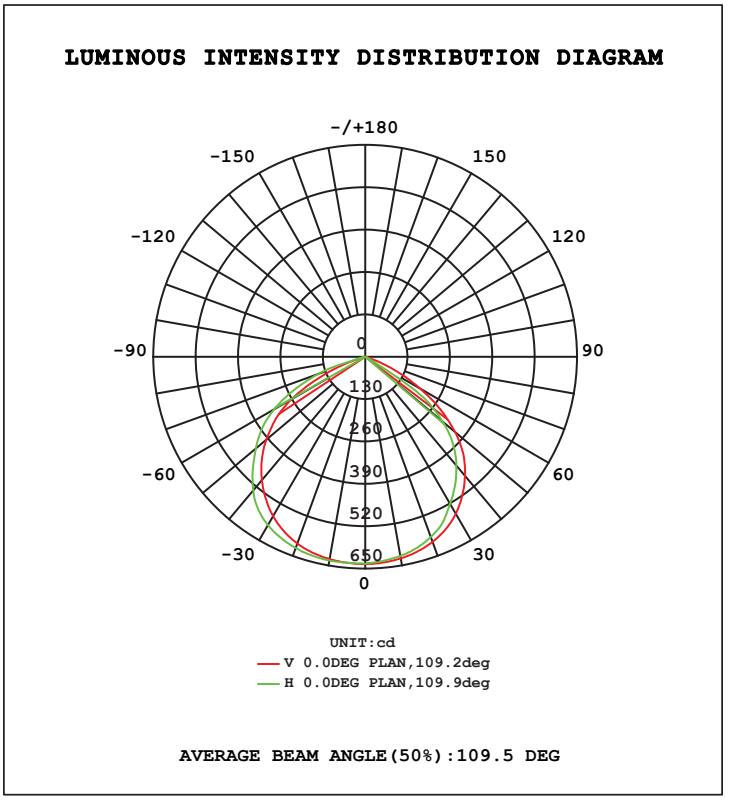

20W LED Slim Wall Pack

WET LOCATION

Item#	Description	Watts	Volts	CRI	CCT	Total Lumens*	Lumens / Watt	Width	Height	Ext.	Equivalent
65-096	LED SLIM WALL PACK 20W BRONZE	20	120~277	↑75	5000K	1,800	90	5.04"	5.59"	9.05"	70-100W MET. HAL.

* Lumens measured at LED source

Pack: 4

20W LED Wall Pack Full Cut-off "Dark Sky" Security Flood Fixture

Bronze Finish / Tempered Glass

These fixtures deliver powerful, efficient LED light yet their design adheres to dark parameters. In addition, they are available from 20W to 80W so varying lighting situations can be addressed using the same fixture design. The design is compact and sleek and will integrate well into most any architecture. The rugged, die cast aluminum body is finished in UV stabilized powder coated Bronze and light is distributed through a heat and impact resistant tempered glass lens. Mounting is easy with the quick mount system and they are cULus wet location listed making them perfect for most any environment. These LED fixtures represent long life, high efficiency and low maintenance.

Features:

- DLC and UL listed
- IP65 Rated enclosure
- Die-cast aluminum body
- UV stabilized powder coated finish
- Dual heat dissipation platform
- Suitable for wet locations
- Heat and impact resistant tempered glass
- 5 Year warranty

Specifications:

- 20W
- 2,169 Lumens*
- 120~277V
- 5000K
- 75+ CRI
- 70-100W MH Equivalent
- Operating temperature: –40°C to 40°C
- 50,000 Hour life

Item no. **65-064**

Dimensions

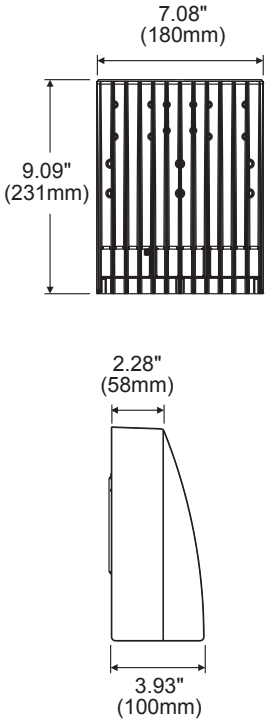

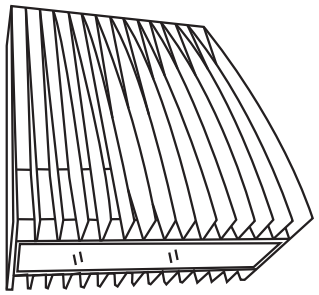

Photometrics

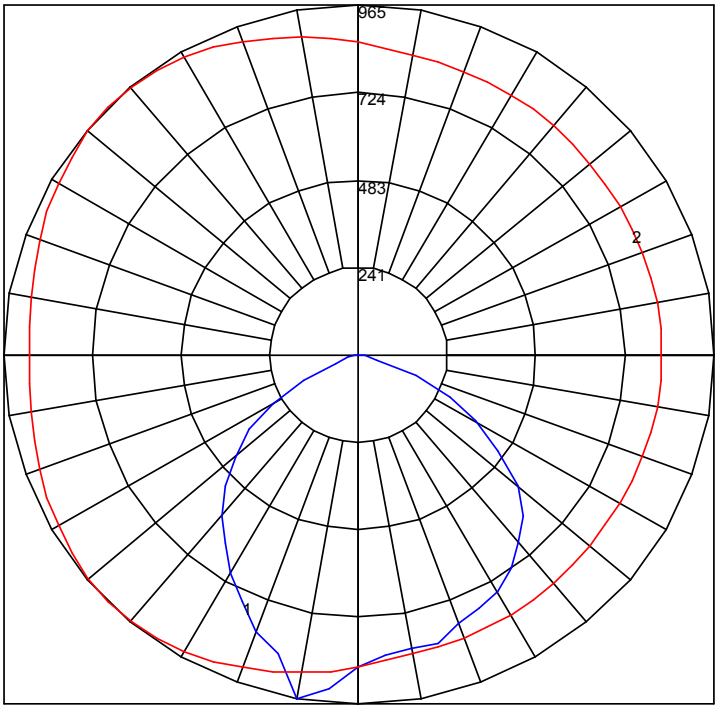

Maximum Candela = 965.29 Located At Horizontal Angle = 135, Vertical Angle = 10
1 - Vertical Plane Through Horizontal Angles (135 - 315) (Through Max. Cd.)
2 - Horizontal Cone Through Vertical Angle (10) (Through Max. Cd.)

20W Wall Mount Dark Sky LED

WET LOCATION

Item#	Description	Watts	Volts	CRI	CCT	Total Lumens*	Lumens / Watt	Width	Height	Ext.	Equivalent
65-064	LED WALL LIGHT 20W BRONZE FINISH	20	120~277	↑75	5000K	2,169	121	7.08"	9.09"	2.28"	70-100W MET. HAL.

* Lumens measured at LED source

Pack: 6

30W LED Wall Pack Full Cut-off "Dark Sky" Security Flood Fixture

Bronze Finish / Tempered Glass

These fixtures deliver powerful, efficient LED light yet their design adheres to dark parameters. In addition, they are available from 20W to 80W so varying lighting situations can be addressed using the same fixture design. The design is compact and sleek and will integrate well into most any architecture. The rugged, die cast aluminum body is finished in UV stabilized powder coated Bronze and light is distributed through a heat and impact resistant tempered glass lens. Mounting is easy with the quick mount system and they are cULus wet location listed making them perfect for most any environment. These LED fixtures represent long life, high efficiency and low maintenance.

Features:

- DLC and UL listed
- IP65 Rated enclosure
- Die-cast aluminum body
- UV stabilized powder coated finish
- Dual heat dissipation platform
- Suitable for wet locations
- Heat and impact resistant tempered glass
- 5 Year warranty

Specifications:

- 30W
- 2,788 Lumens*
- 120~277V
- 5000K
- 75+ CRI
- 100-150W MH Equivalent
- Operating temperature: –40°C to 40°C
- 50,000 Hour life

Item no. **65-065**

Dimensions

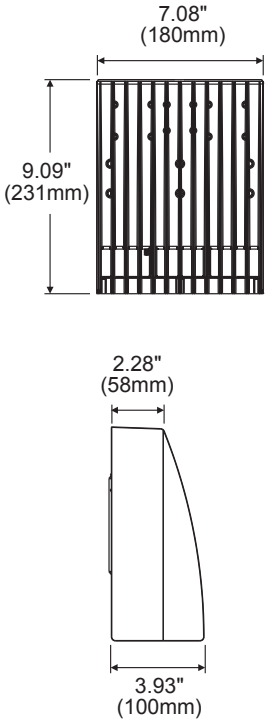

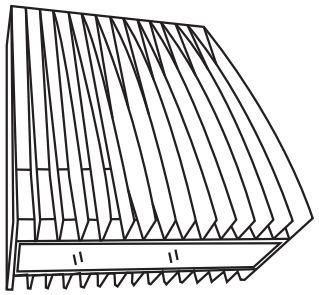

Photometrics

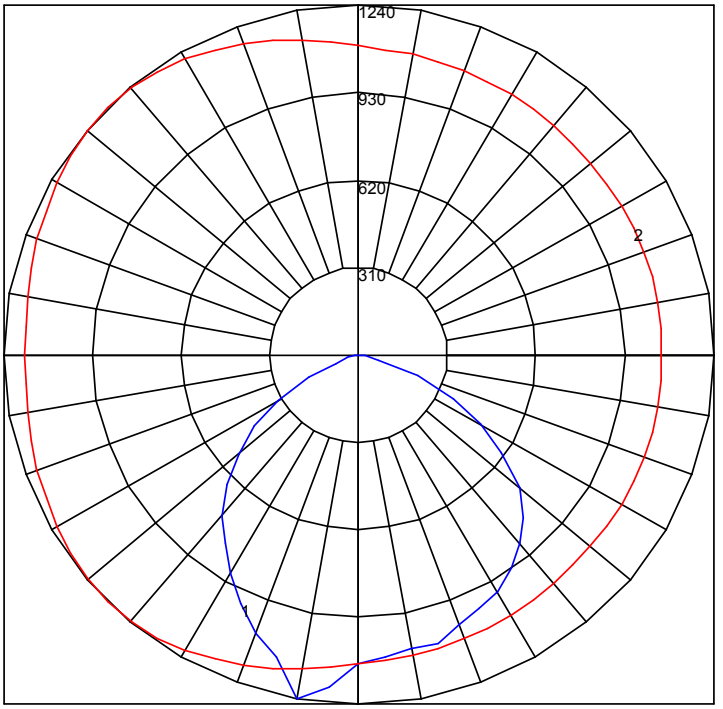

Maximum Candela = 1240.02 Located At Horizontal Angle = 135, Vertical Angle = 10
1 - Vertical Plane Through Horizontal Angles (135 - 315) (Through Max. Cd.)
2 - Horizontal Cone Through Vertical Angle (10) (Through Max. Cd.)

30W Wall Mount Dark Sky LED

WET LOCATION

Item#	Description	Watts	Volts	CRI	CCT	Total Lumens*	Lumens / Watt	Width	Height	Ext.	Equivalent
65-065	LED WALL LIGHT 30W BRONZE FINISH	30	120~277	↑75	5000K	2,788	95	7.08"	9.09"	2.28"	100-150W MET. HAL.

* Lumens measured at LED source

Pack: 6

40W LED Wall Pack Full Cut-off "Dark Sky" Security Flood Fixture

Bronze Finish / Tempered Glass

These fixtures deliver powerful, efficient LED light yet their design adheres to dark parameters. In addition, they are available from 20W to 80W so varying lighting situations can be addressed using the same fixture design. The design is compact and sleek and will integrate well into most any architecture. The rugged, die cast aluminum body is finished in UV stabilized powder coated Bronze and light is distributed through a heat and impact resistant tempered glass lens. Mounting is easy with the quick mount system and they are cULus wet location listed making them perfect for most any environment. These LED fixtures represent long life, high efficiency and low maintenance.

Features:

- DLC and UL listed
- IP65 Rated enclosure
- Die-cast aluminum body
- UV stabilized powder coated finish
- Dual heat dissipation platform
- Suitable for wet locations
- Heat and impact resistant tempered glass
- 5 Year warranty

Specifications:

- 40W
- 3,908 Lumens*
- 120~277V
- 5000K
- 75+ CRI
- 150-200W MH Equivalent
- Operating temperature: –40°C to 40°C
- 50,000 Hour life

Item no. **65-066**

Dimensions

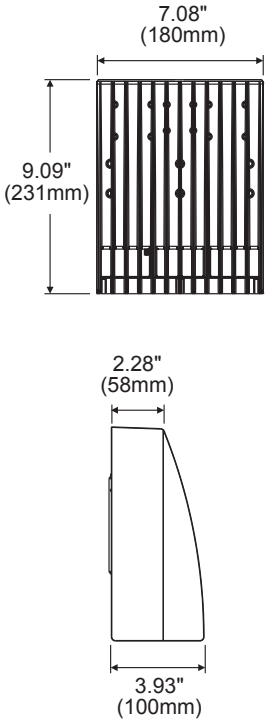

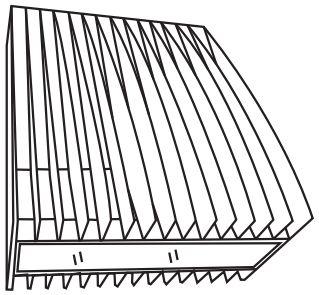

Photometrics

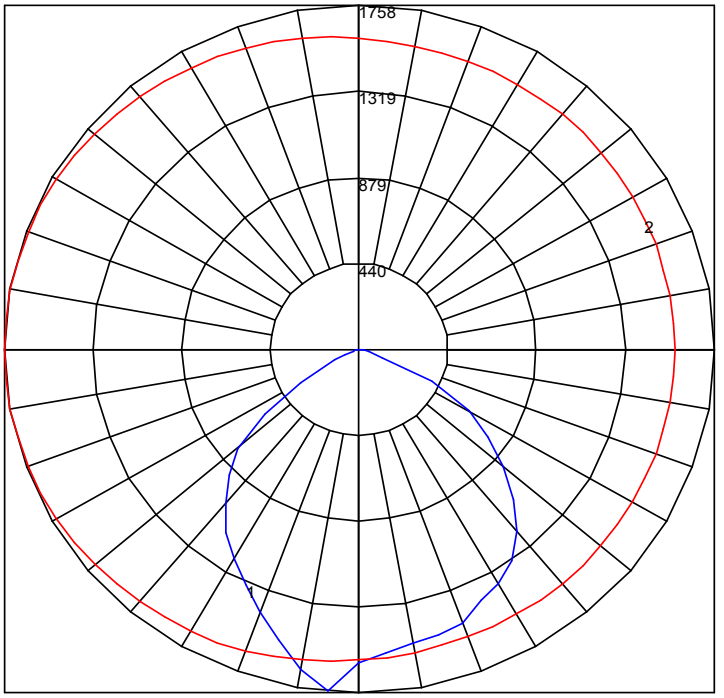

Maximum Candela = 1758 Located At Horizontal Angle = 175, Vertical Angle = 5
1 - Vertical Plane Through Horizontal Angles (175 - 355) (Through Max. Cd.)
2 - Horizontal Cone Through Vertical Angle (5) (Through Max. Cd.)

40W Wall Mount Dark Sky LED

WET LOCATION

Item#	Description	Watts	Volts	CRI	CCT	Total Lumens*	Lumens / Watt	Width	Height	Ext.	Equivalent
65-066	LED WALL LIGHT 40W BRONZE FINISH	40	120~277	↑75	5000K	3,908	105	7.08"	9.09"	2.28"	150-200W MET. HAL.

* Lumens measured at LED source

Pack: 6

60W LED Wall Pack Full Cut-off "Dark Sky" Security Flood Fixture

Bronze Finish / Tempered Glass

These fixtures deliver powerful, efficient LED light yet their design adheres to dark parameters. In addition, they are available from 20W to 80W so varying lighting situations can be addressed using the same fixture design. The design is compact and sleek and will integrate well into most any architecture. The rugged, die cast aluminum body is finished in UV stabilized powder coated Bronze and light is distributed through a heat and impact resistant tempered glass lens. Mounting is easy with the quick mount system and they are cULus wet location listed making them perfect for most any environment. These LED fixtures represent long life, high efficiency and low maintenance.

Features:

- DLC and UL listed
- IP65 Rated enclosure
- Die-cast aluminum body
- UV stabilized powder coated finish
- Dual heat dissipation platform
- Suitable for wet locations
- Heat and impact resistant tempered glass
- 5 Year warranty

Specifications:

- 60W
- 6,743 Lumens*
- 120~277V
- 5000K
- 75+ CRI
- 200-250W MH Equivalent
- Operating temperature: –40°C to 40°C
- 50,000 Hour life

Item no. **65-067**

Dimensions

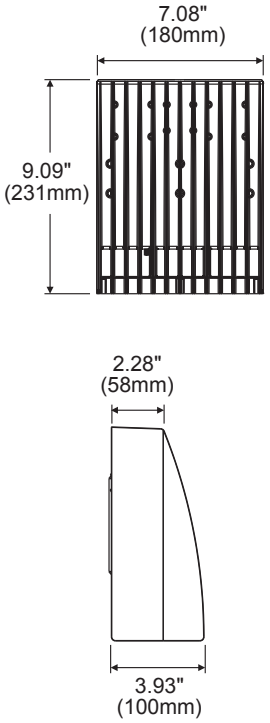

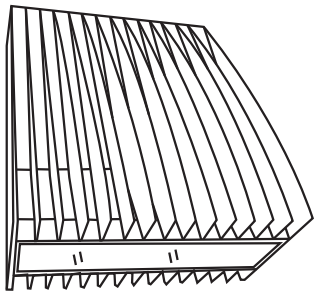

Photometrics

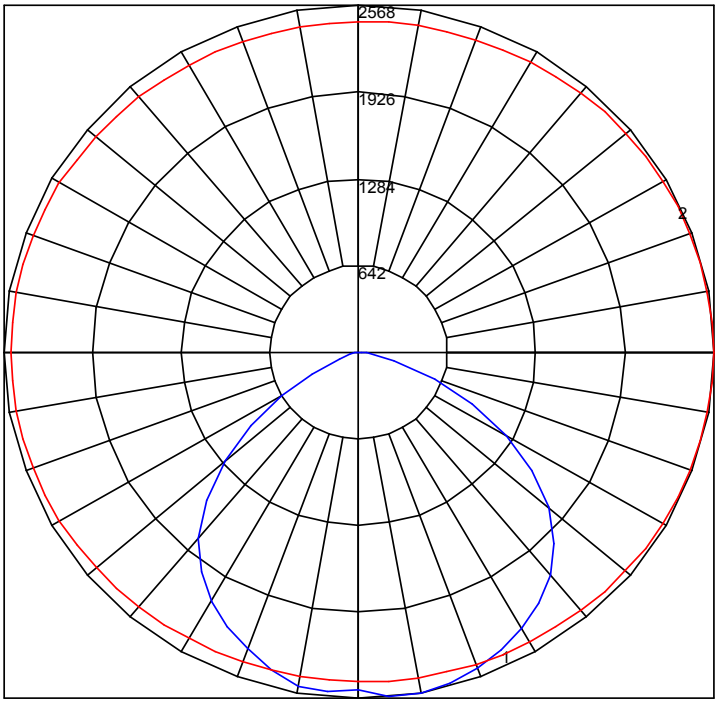

Maximum Candela = 2568 Located At Horizontal Angle = 0, Vertical Angle = 10
1 - Vertical Plane Through Horizontal Angles (0 - 180) (Through Max. Cd.)
2 - Horizontal Cone Through Vertical Angle (10) (Through Max. Cd.)

60W Wall Mount Dark Sky LED

WET LOCATION

Item#	Description	Watts	Volts	CRI	CCT	Total Lumens*	Lumens / Watt	Width	Height	Ext.	Equivalent
65-067	LED WALL LIGHT 60W BRONZE FINISH	60	120~277	↑75	5000K	6,743	111	7.08"	9.09"	2.28"	200-250W MET. HAL.

* Lumens measured at LED source

Pack: 6

80W LED Wall Pack Full Cut-off "Dark Sky" Security Flood Fixture

Bronze Finish / Tempered Glass

These fixtures deliver powerful, efficient LED light yet their design adheres to dark parameters. In addition, they are available from 20W to 80W so varying lighting situations can be addressed using the same fixture design. The design is compact and sleek and will integrate well into most any architecture. The rugged, die cast aluminum body is finished in UV stabilized powder coated Bronze and light is distributed through a heat and impact resistant tempered glass lens. Mounting is easy with the quick mount system and they are cULus wet location listed making them perfect for most any environment. These LED fixtures represent long life, high efficiency and low maintenance.

Features:

- DLC and UL listed
- IP65 Rated enclosure
- Die-cast aluminum body
- UV stabilized powder coated finish
- Dual heat dissipation platform
- Suitable for wet locations
- Heat and impact resistant tempered glass
- 5 Year warranty

Specifications:

- 80W
- 7,970 Lumens*
- 120~277V
- 5000K
- 75+ CRI
- 250W MH Equivalent
- Operating temperature: –40°C to 40°C
- 50,000 Hour life

Item no. **65-068**

Dimensions

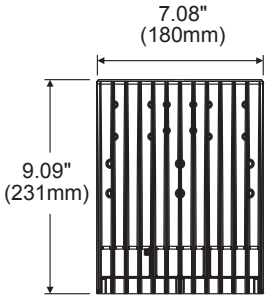

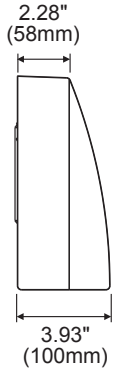

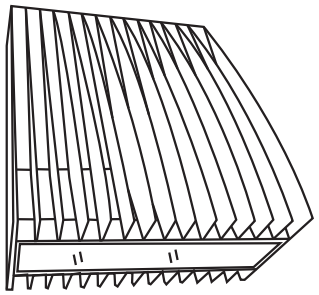

Photometrics

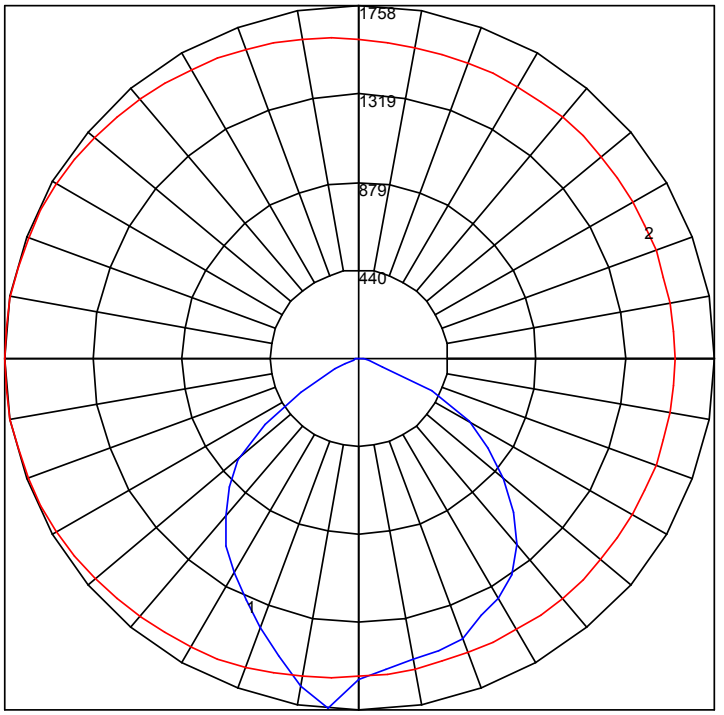

Maximum Candela = 1758 Located At Horizontal Angle = 175, Vertical Angle = 5
1 - Vertical Plane Through Horizontal Angles (175 - 355) (Through Max. Cd.)
2 - Horizontal Cone Through Vertical Angle (5) (Through Max. Cd.)

80W Wall Mount Dark Sky LED

WET LOCATION

Item#	Description	Watts	Volts	CRI	CCT	Total Lumens*	Lumens / Watt	Width	Height	Ext.	Equivalent
65-068	LED WALL LIGHT 80W BRONZE FINISH	80	120~277	↑75	5000K	7,970	102	7.08"	9.09"	2.28"	250W MET. HAL.

* Lumens measured at LED source

Pack: 6

38W LED Arc Wall Pack

Bronze Finish

The 38 Watt LED arc wall pack delivers 3,500 Lumens at 5000K from a slim, compact housing. The rugged aluminum body is finished in UV stabilized powder coated bronze and fitted with an impact resistant lens to stand up to most any weather. It's IP65 rated, suited for wet locations. It meets all safety regulations, is dark sky friendly and delivers long life, high efficiency and lower maintenance costs.

Features:

- DLC and ETL listed
- Dark sky friendly
- IP65 Rated enclosure
- Die cast aluminum housing
- Suitable for wet locations
- 5 Year warranty

Specifications:

- 38W
- 3,500 Lumens*
- 120~277V
- 5000K
- 75+ CRI
- 100-150W MH Equivalent
- Operating temperature: –25°C to 40°C
- 50,000 Hour life

Item no. **65-097**

Dimensions

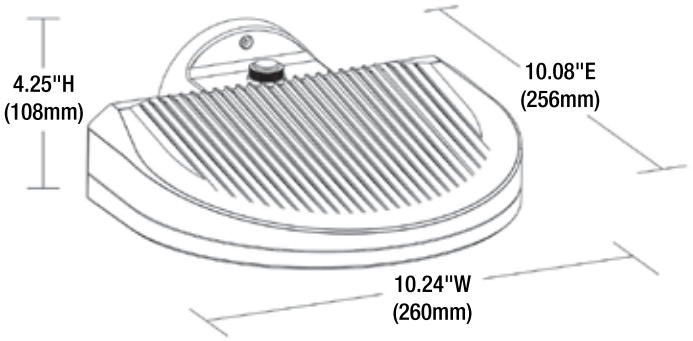

Photometrics

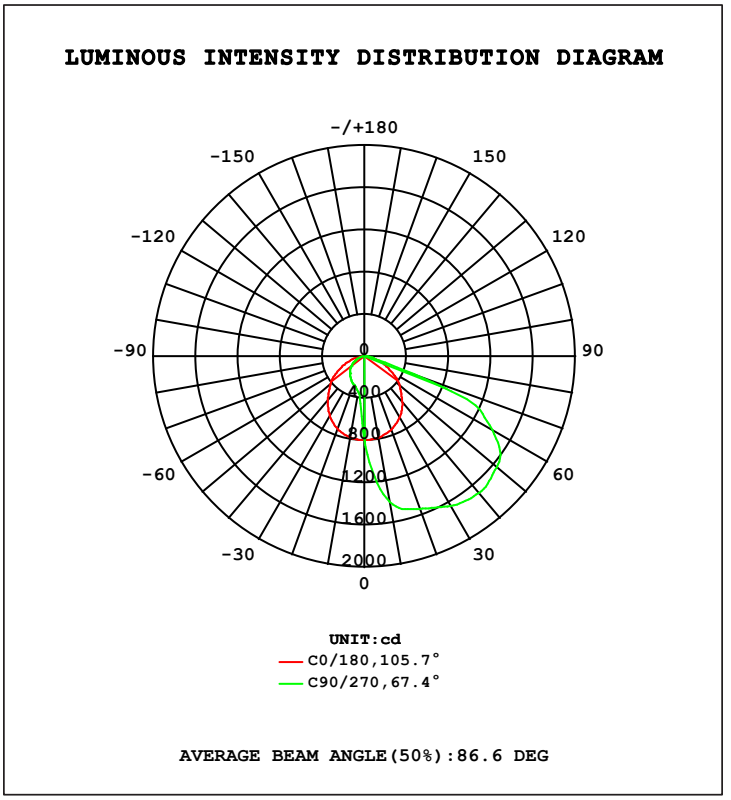

38W LED Arc Wall Pack

WET LOCATION

Item#	Description	Watts	Volts	CRI	CCT	Total Lumens*	Lumens / Watt	Width	Height	Ext.	Equivalent
65-097	LED ARC WALL PACK 38W BRONZE	38	120~277	↑75	5000K	3,500	92	10.24"	4.25"	10.08"	100-150W MET. HAL.

* Lumens measured at LED source

Pack: 4

32W LED Adjustable Arc Wall Pack

Bronze Finish

Nuvo Lighting's LED adjustable arc wall pack offers both versatility and efficiency. From just 32 Watts, this fixture delivers 2,900 Lumens at 5000K through its adjustable head. The rugged cast aluminum body is finished in UV stabilized powder coated bronze and fitted with an impact resistant lens to stand up to most any weather. It's IP65 rated, suited for wet locations. It meets all safety regulations, is dark sky friendly, and delivers long life, high efficiency and lower maintenance costs.

Features:

- DLC and ETL listed
- Dark sky friendly
- IP65 Rated enclosure
- Die cast aluminum housing
- Suitable for wet locations
- 5 Year warranty

Specifications:

- 32W
- 2,900 Lumens*
- 120~277V
- 5000K
- 75+ CRI
- 100-150W MH Equivalent
- Operating temperature: –25°C to 40°C
- 50,000 Hour life

Item no. **65-098**

Dimensions

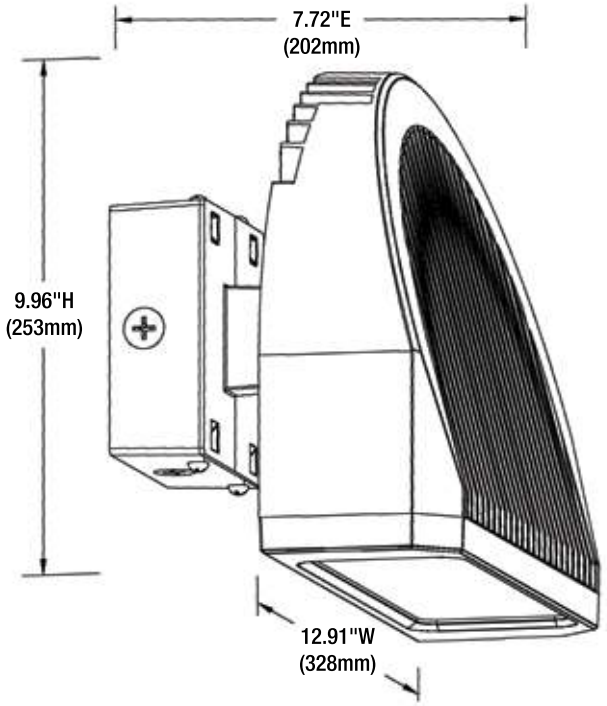

Photometrics

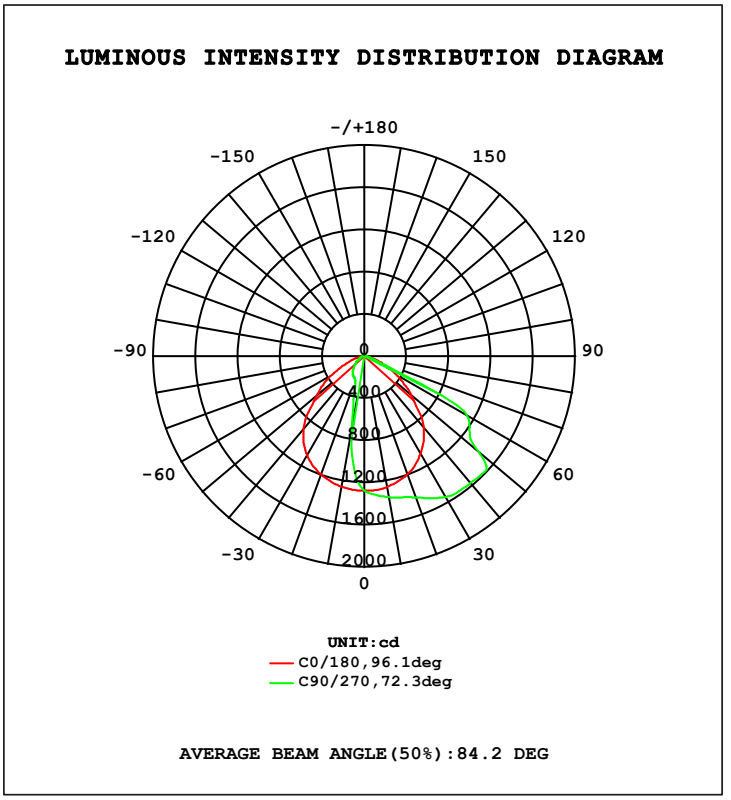

32W LED Arc Wall Pack

WET LOCATION

Item#	Description	Watts	Volts	CRI	CCT	Total Lumens*	Lumens / Watt	Width	Height	Ext.	Equivalent
65-098	LED ADJUSTABLE ARC WALL PACK 32W BRONZE	32	120~277	↑75	5000K	2,900	91	12.91"	9.96"	7.72"	100-150W MET. HAL.

* Lumens measured at LED source

Pack: 2

36W LED Wall Pack Full Cut-off "Dark Sky" Security Flood Fixture

Bronze Finish / Tempered Glass

These fixtures deliver powerful, efficient LED light yet their design adheres to dark parameters. The rugged, die cast aluminum body is finished in UV stabilized powder coated Bronze and light is distributed through a heat and impact resistant tempered glass lens. Mounting is easy with the quick mount system and they are cULus wet location listed making them perfect for most any environment. These LED fixtures represent long life, high efficiency and low maintenance.

Features:

- DLC & UL listed
- Dark sky friendly
- Die-cast aluminum body
- UV stabilized powder coated finish
- Suitable for wet locations
- Heat and impact resistant tempered glass
- 5 Year warranty

Specifications:

- 36W
- 2,998 Lumens*
- 120~277V
- 5000K
- 75+ CRI
- 150W MH Equivalent
- Operating temperature: –40°C to 40°C
- 50,000 Hour life

Item no. **65-060**

Dimensions

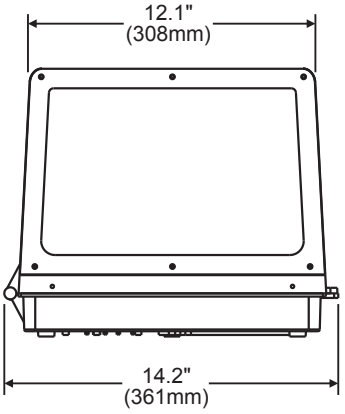

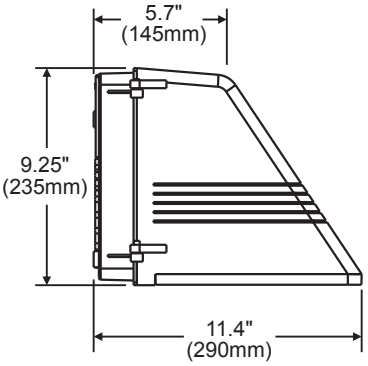

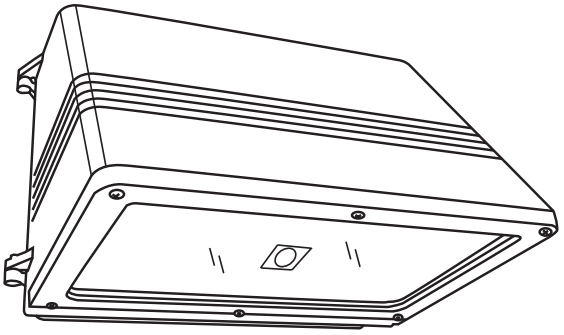

Photometrics

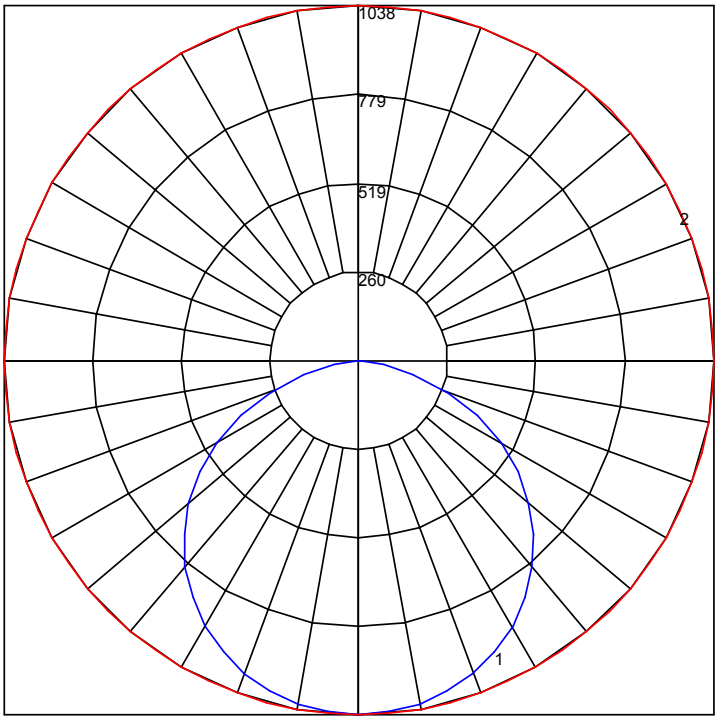

Maximum Candela = 1038 Located At Horizontal Angle = 0, Vertical Angle = 0
1 - Vertical Plane Through Horizontal Angles (0 - 180) (Through Max. Cd.)
2 - Horizontal Cone Through Vertical Angle (0) (Through Max. Cd.)

36W Wall Mount Dark Sky LED

WET LOCATION

Item#	Description	Watts	Volts	CRI	CCT	Total Lumens*	Lumens / Watt	Width	Height	Ext.	Equivalent
65-060	LED DARK SKY WALL PACK 36W BRONZE/TEMPERED GLASS	36.35	120~277	↑75	5000K	2,998	82	14.2"	11.4"	9.25"	150W MET. HAL.

* Lumens measured at LED source

Pack: 6

73W LED Wall Pack Full Cut-off "Dark Sky" Security Flood Fixture

Bronze Finish / Tempered Glass

These fixtures deliver powerful, efficient LED light yet their design adheres to dark parameters. The rugged, die cast aluminum body is finished in UV stabilized powder coated Bronze and light is distributed through a heat and impact resistant tempered glass lens. Mounting is easy with the quick mount system and they are cULus wet location listed making them perfect for most any environment. These LED fixtures represent long life, high efficiency and low maintenance.

Features:

- DLC & UL listed
- Dark sky friendly
- Die-cast aluminum body
- UV stabilized powder coated finish
- Suitable for wet locations
- Heat and impact resistant tempered glass
- 5 Year warranty

Specifications:

- 74W
- 6,499 Lumens*
- 120~277V
- 5000K
- 75+ CRI
- 250W MH Equivalent
- Operating temperature: –40°C to 40°C
- 50,000 Hour life

Item no. **65-061**

Dimensions

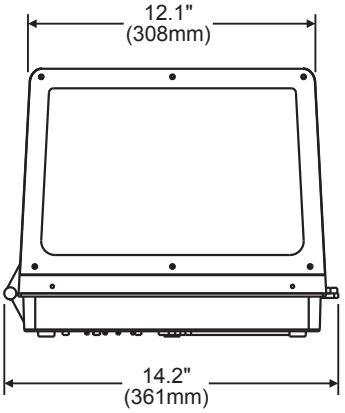

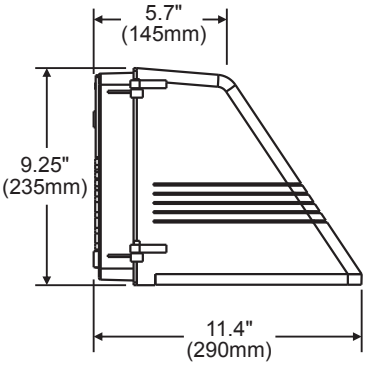

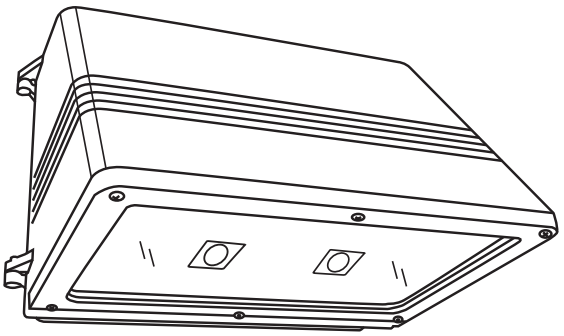

Photometrics

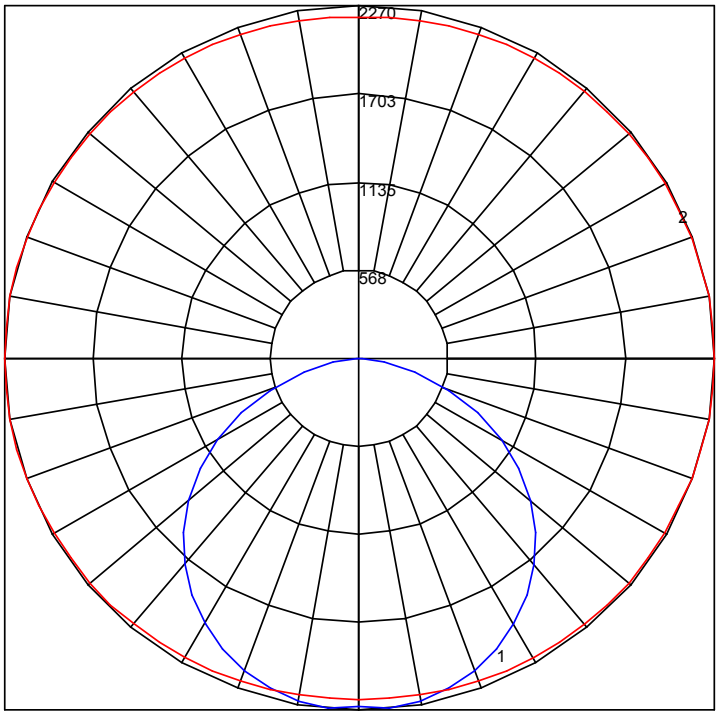

Maximum Candela = 2270 Located At Horizontal Angle = 0, Vertical Angle = 5
1 - Vertical Plane Through Horizontal Angles (0 - 180) (Through Max. Cd.)
2 - Horizontal Cone Through Vertical Angle (5) (Through Max. Cd.)

73W Wall Mount Dark Sky LED

c UL us LISTED WET LOCATION

Item#	Description	Watts	Volts	CRI	CCT	Total Lumens*	Lumens / Watt	Width	Height	Ext.	Equivalent
65-061	LED DARK SKY WALL PACK 74W BRONZE/TEMPERED GLASS	73.93	120~277	↑75	5000K	6,499	88	14.2"	11.4"	9.25"	250W MET. HAL.

* Lumens measured at LED source

Pack: 6

13W LED Wall Pack
with Photo Control

Bronze Finish / Prismatic Lens

A simple design that delivers all the benefits that come with LED lighting – long life, low maintenance and high efficiency. It's rugged, too, with a die cast aluminum body, UV stabilized powder coated Bronze finish and is cULus listed for wet locations. The prismatic lens offers uniform light distribution and installation is easy. This is the perfect upgrade for old single-lamp incandescent fixtures.

Features:

- UL listed
- Die-cast aluminum body
- UV stabilized powder coated finish
- Prismatic lens for uniform light distribution
- Suitable for wet locations
- Photo control – On at dusk / Off at dawn
- 5 Year warranty

Specifications:

- 13W
- 770 Lumens*
- 120V
- 5000K
- 75+ CRI
- 50-70W MH Equivalent
- Operating temperature: –40°C to 40°C
- 50,000 Hour life

Item no. **65-062**

Dimensions

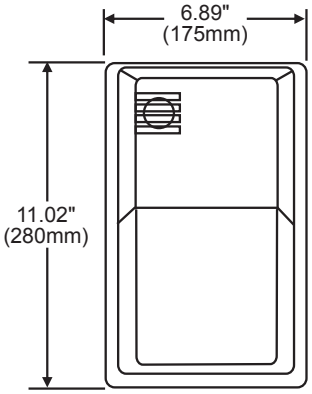

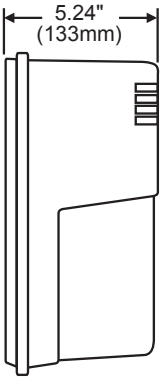

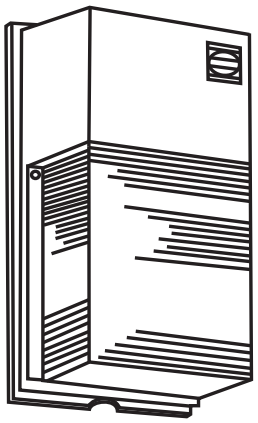

Photometrics

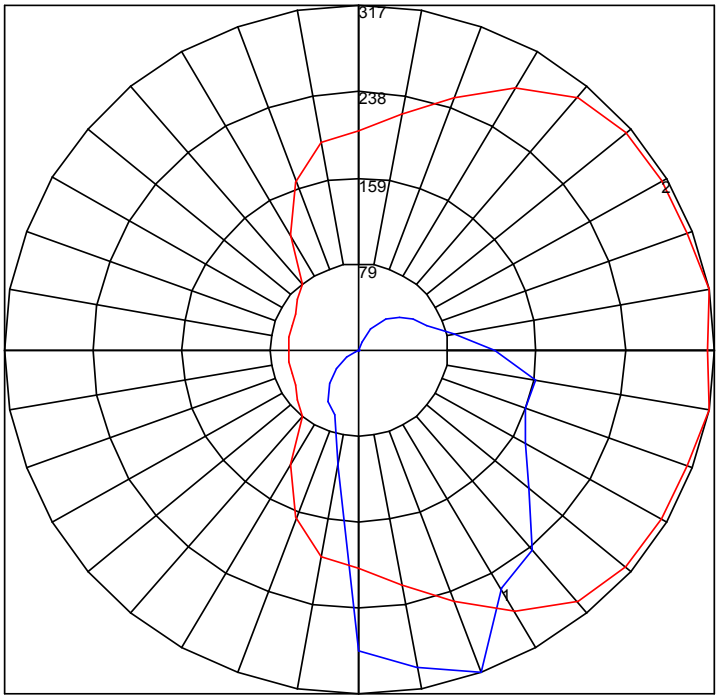

Maximum Candela = 317.3 Located At Horizontal Angle = 10, Vertical Angle = 20
1 - Vertical Plane Through Horizontal Angles (10 - 190) (Through Max. Cd.)
2 - Horizontal Cone Through Vertical Angle (20) (Through Max. Cd.)

13W Wall Mount LED

c UL us LISTED WET LOCATION

RoHS COMPLIANT

Item#	Description	Watts	Volts	CRI	CCT	Total Lumens*	Lumens / Watt	Width	Height	Ext.	Equivalent
65-062	LED ENTRANCE LIGHT 13W - PHOTO CELL BRONZE/PRISMATIC LENS	13.3	120	↑75	5000K	770	58	6.89"	11.02"	5.24"	50-70W MET. HAL.

* Lumens measured at LED source

Pack: 6

26W LED Wall Pack
with Photo Control

Bronze Finish / Prismatic Lens

Similar but more powerful than our 65-062 13W wall pack, another simple design that delivers all the benefits that come with LED lighting—long life, low maintenance and high efficiency. It can withstand the elements too, with a die cast aluminum body, UV stabilized powder coated Bronze finish and is cULus listed for wet locations. The prismatic lens offers uniform light distribution and installation is easy. This is a higher-lumen upgrade for old single-lamp incandescent fixtures.

Features:

- UL listed
- Die-cast aluminum body
- UV stabilized powder coated finish
- Prismatic lens for uniform light distribution
- Suitable for wet locations
- 5 Year warranty

Specifications:

- 26W
- 1,700 Lumens*
- 120~277V
- 5000K
- 75+ CRI
- 70-100W MH Equivalent
- Operating temperature: –40°C to 40°C
- 50,000 Hour life

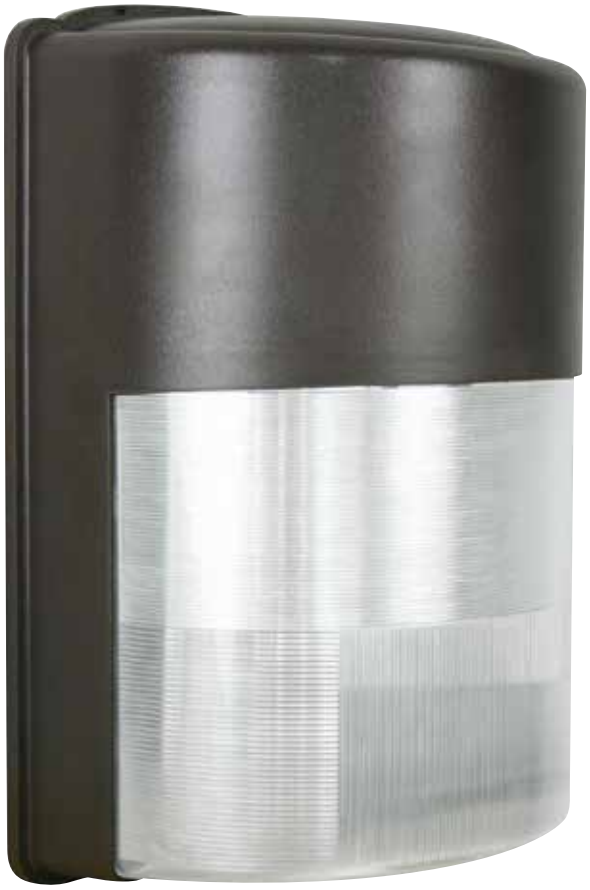

Item no. **65-063**

Dimensions

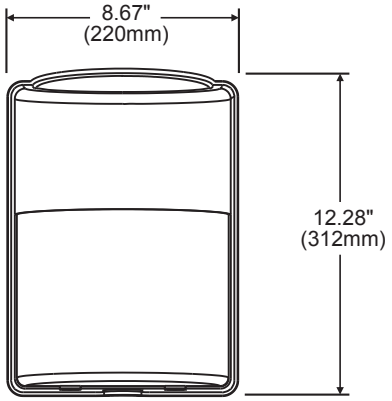

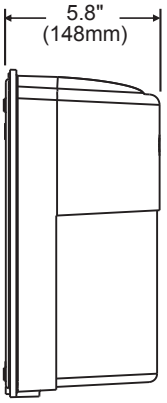

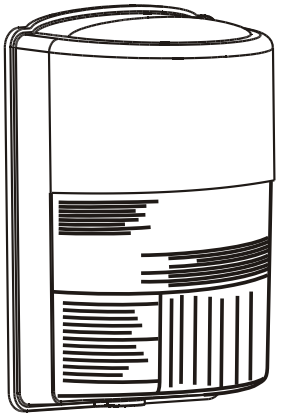

Photometrics

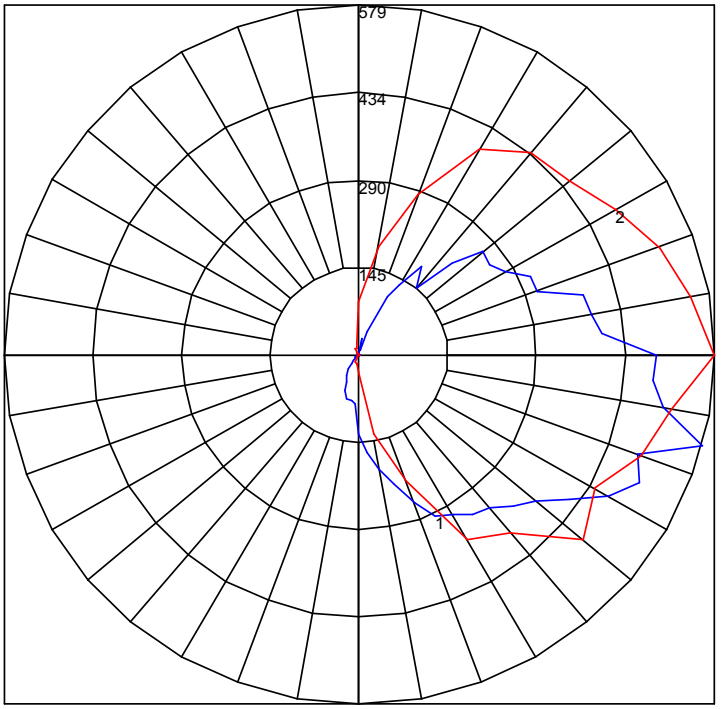

Maximum Candela = 579.31 Located At Horizontal Angle = 0, Vertical Angle = 75
1 - Vertical Plane Through Horizontal Angles (0 - 180) (Through Max. Cd.)
2 - Horizontal Cone Through Vertical Angle (75) (Through Max. Cd.)

26W Wall Mount LED

c UL us LISTED WET LOCATION

RoHS COMPLIANT

Item#	Description	Watts	Volts	CRI	CCT	Total Lumens*	Lumens / Watt	Width	Height	Ext.	Equivalent
65-063	LED ENTRANCE LIGHT 26W BRONZE/ PRISMATIC LENS	26	120~277	↑75	5000K	1,700	65	8.67"	12.28"	5.8"	70-100W MET. HAL.

* Lumens measured at LED source

Pack: 6

37W LED Wall Pack Security Flood Fixture

Bronze Finish / Borosilicate Glass

These LED fixtures represents a step up in both lighting capability and rugged construction. At 37W, they are capable of lighting larger areas, and their heat and impact resistant borosilicate glass lens and UV stabilized Bronze finish make them suitable for harsher environments. They're constructed of die-cast aluminum, use the quick-mount installation system for ease installation, and are cULus listed for wet locations. LED efficiency and long life mean less maintenance and energy costs.

Features:

- UL listed
- Die-cast aluminum body
- UV stabilized powder coated finish
- Suitable for wet locations
- Heat and impact resistant borosilicate glass lens
- 5 Year warranty

Specifications:

- 37W
- 3,442 Lumens*
- 120~277V
- 5000K
- 75+ CRI
- 100-150W MH Equivalent
- Operating temperature: –40°C to 40°C
- 50,000 Hour life

Item no. **65-056**

Dimensions

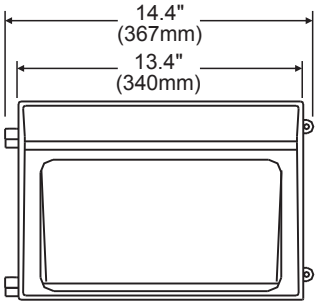

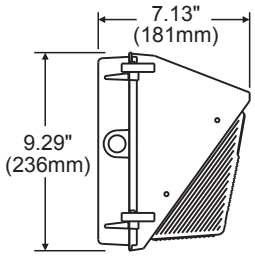

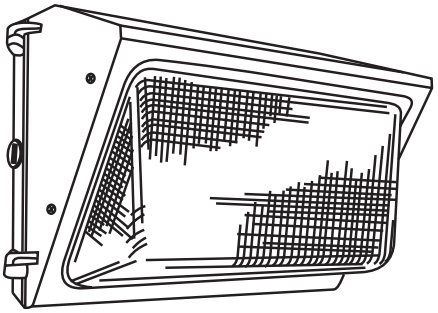

Photometrics

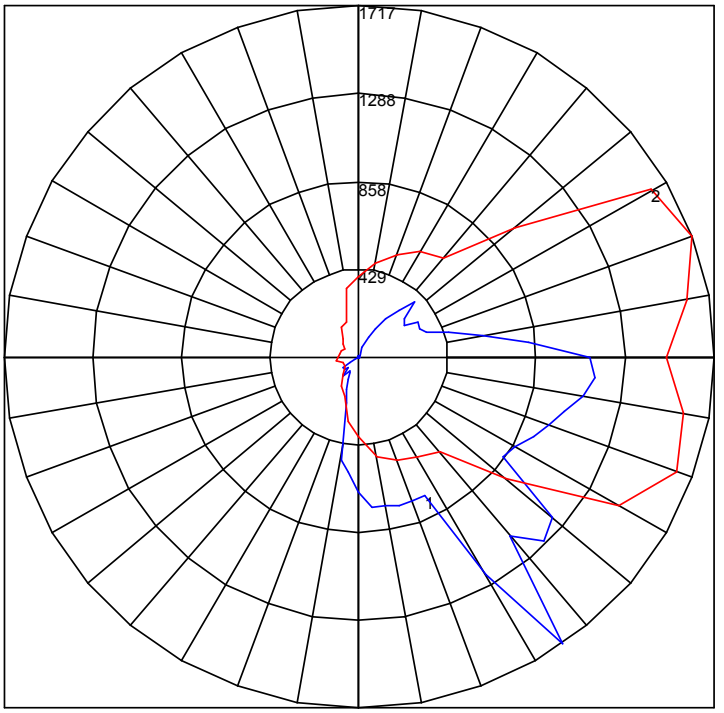

Maximum Candela = 1716.9 Located At Horizontal Angle = 20, Vertical Angle = 35
1 - Vertical Plane Through Horizontal Angles (20 - 200) (Through Max. Cd.)
2 - Horizontal Cone Through Vertical Angle (35) (Through Max. Cd.)

37W Wall Mount LED

c UL us LISTED WET LOCATION

RoHS COMPLIANT

Item#	Description	Watts	Volts	CRI	CCT	Total Lumens*	Lumens / Watt	Width	Height	Ext.	Equivalent
65-056	LED WALL PACK 37W BRONZE/ BOROSILICATE GLASS	37.3	120~277	↑75	5000K	3,442	92	14.4"	9.29"	7.13"	100-150W MET. HAL.

* Lumens measured at LED source

Pack: 6

55W LED Wall Pack Security Flood Fixture

Bronze Finish / Borosilicate Glass

These LED fixtures represents a step up in both lighting capability and rugged construction. At 55W, they are capable of lighting larger areas, and their heat and impact resistant borosilicate glass lens and UV stabilized Bronze finish make them suitable for harsher environments. They're constructed of die-cast aluminum, use the quick-mount installation system for ease installation, and are cULus listed for wet locations. LED efficiency and long life mean less maintenance and energy costs.

Features:

- UL listed
- Die-cast aluminum body
- UV stabilized powder coated finish
- Suitable for wet locations
- Heat and impact resistant borosilicate glass lens
- 5 Year warranty

Specifications:

- 55W
- 5,589 Lumens*
- 120~277V
- 5000K
- 75+ CRI
- 150-200W MH Equivalent
- Operating temperature: –40°C to 40°C
- 50,000 Hour life

Item no. **65-057**

Dimensions

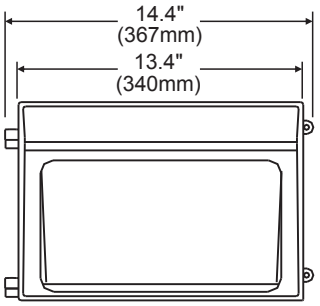

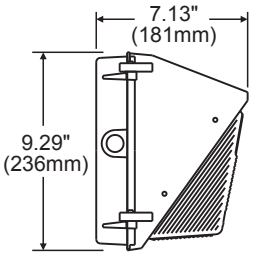

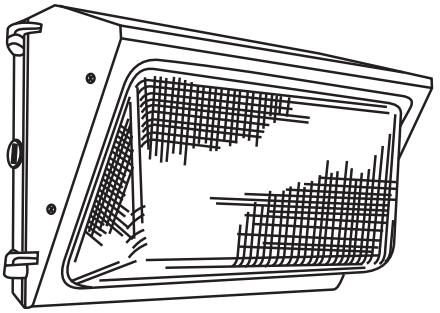

Photometrics

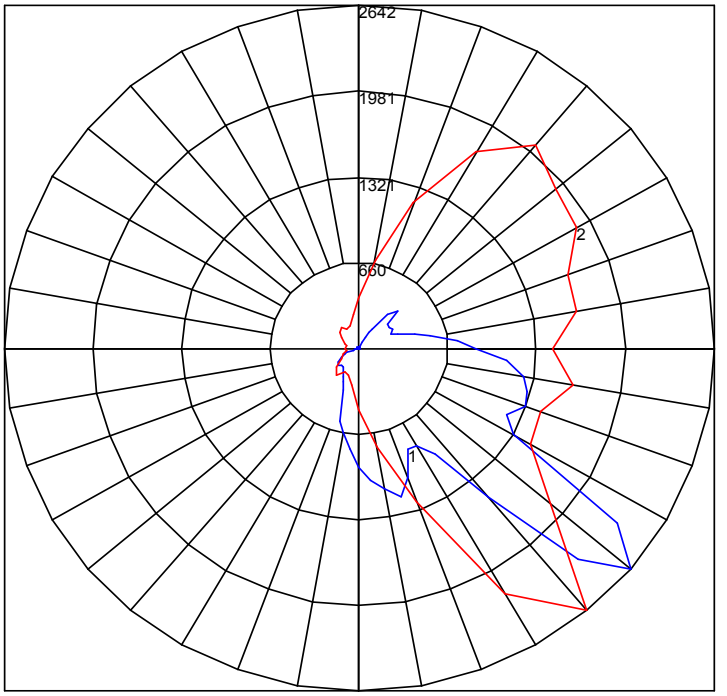

Maximum Candela = 2641.92 Located At Horizontal Angle = 310, Vertical Angle = 50
1 - Vertical Plane Through Horizontal Angles (310 - 130) (Through Max. Cd.)
2 - Horizontal Cone Through Vertical Angle (50) (Through Max. Cd.)

55W Wall Pack LED Security Flood

c UL us LISTED WET LOCATION

RoHS COMPLIANT

Item#	Description	Watts	Volts	CRI	CCT	Total Lumens*	Lumens / Watt	Width	Height	Ext.	Equivalent
65-057	LED WALL PACK 55W BRONZE/ BOROSILICATE GLASS	55.6	120~277	↑75	5000K	5,589	101	14.4"	9.29"	7.13"	150-200W MET. HAL.

* Lumens measured at LED source

Pack: 6

93W LED Wall Pack Security Flood Fixture

Bronze Finish / Borosilicate Glass

Our most powerful LED wall packs, these fixtures represents powerful lighting capability and rugged construction. At 93W, they are capable of lighting large areas, and their heat and impact resistant borosilicate glass lens and UV stabilized Bronze finish make them suitable for harsher environments. They're constructed of die-cast aluminum, use the quick-mount installation system for ease installation, and are cULus listed for wet locations. LED efficiency and long life mean less maintenance and energy costs.

Features:

- UL listed
- Die-cast aluminum body
- UV stabilized powder coated finish
- Suitable for wet locations
- Heat and impact resistant borosilicate glass
- 5 Year warranty

Specifications:

- 93W
- 8,105 Lumens*
- 120~277V
- 5000K
- 75+ CRI
- 250W MH Equivalent
- Operating temperature: –40°C to 40°C
- 50,000 Hour life

Item no. **65-058**

Dimensions

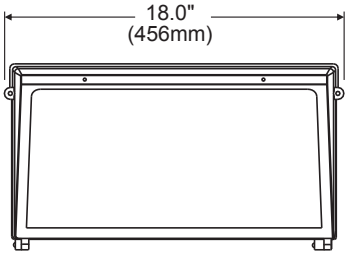

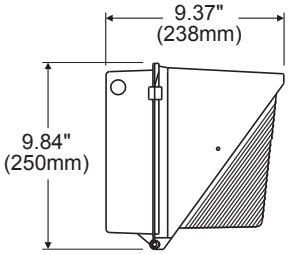

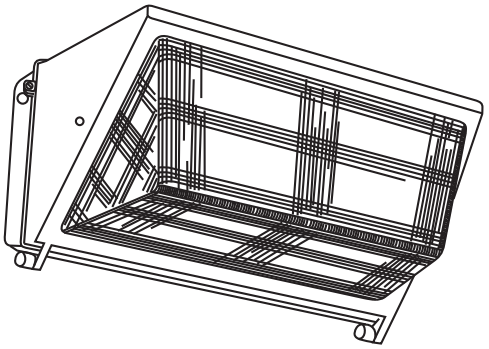

Photometrics

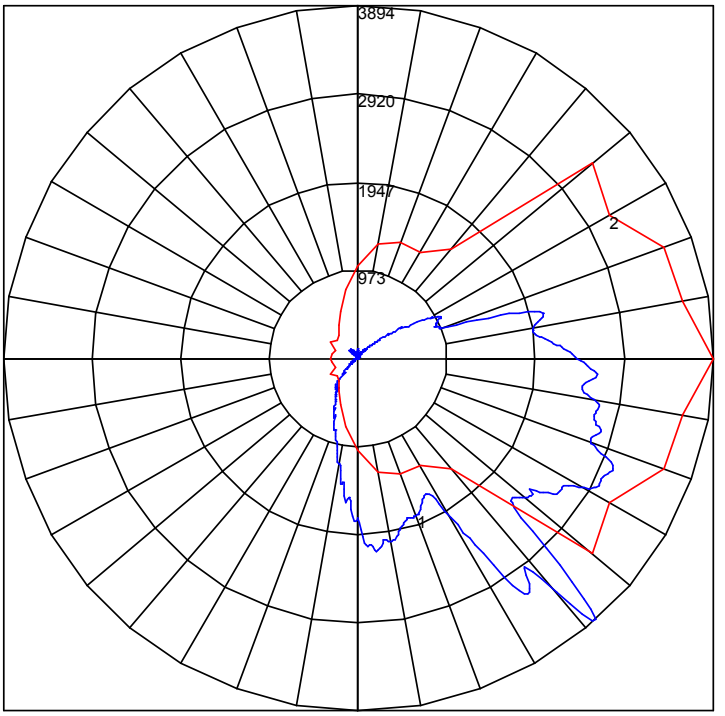

Maximum Candela = 3893.65 Located At Horizontal Angle = 0, Vertical Angle = 42
1 - Vertical Plane Through Horizontal Angles (0 - 180) (Through Max. Cd.)
2 - Horizontal Cone Through Vertical Angle (42) (Through Max. Cd.)

93W Wall Pack LED Security Flood

c UL us LISTED WET LOCATION

RoHS COMPLIANT

Item#	Description	Watts	Volts	CRI	CCT	Total Lumens*	Lumens / Watt	Width	Height	Ext.	Equivalent
65-058	LED WALL PACK 93W BRONZE/ BOROSILICATE GLASS	93	120~277	↑75	5000K	8,105	87	18"	9.84"	9.37"	250W MET. HAL.

* Lumens measured at LED source

Pack: 1

160W LED Wall Pack Security Flood Fixture

Bronze Finish / Borosilicate Glass

Our most powerful LED wall packs, these fixtures represents powerful lighting capability and rugged construction. At 160W, they are capable of lighting large areas, and their heat and impact resistant borosilicate glass lens and UV stabilized Bronze finish make them suitable for harsher environments. They're constructed of die-cast aluminum, use the quick-mount installation system for ease installation, and are cULus listed for wet locations. LED efficiency and long life mean less maintenance and energy costs.

Features:

- UL listed
- Die-cast aluminum body
- UV stabilized powder coated finish
- Suitable for wet locations
- Heat and impact resistant borosilicate glass
- 5 Year warranty

Specifications:

- 160W
- 15,775 Lumens*
- 120~277V
- 5000K
- 75+ CRI
- 400W MH Equivalent
- Operating temperature: –40°C to 40°C
- 50,000 Hour life

Item no. **65-059**

Dimensions

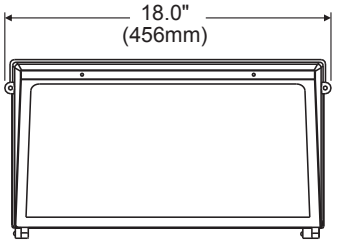

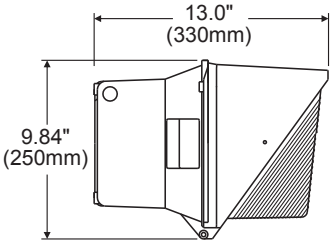

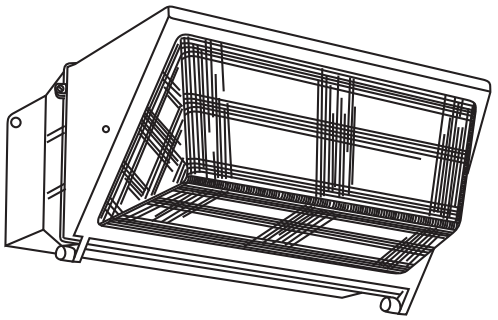

Photometrics

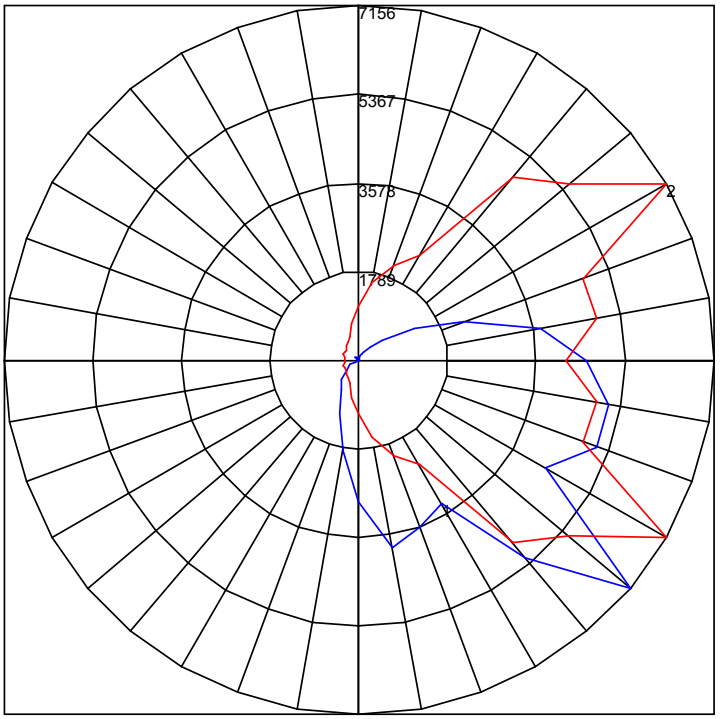

Maximum Candela = 7155.94 Located At Horizontal Angle = 30, Vertical Angle = 50
1 - Vertical Plane Through Horizontal Angles (30 - 210) (Through Max. Cd.)
2 - Horizontal Cone Through Vertical Angle (50) (Through Max. Cd.)

160W Wall Pack LED Security Flood

c UL us LISTED WET LOCATION

RoHS COMPLIANT

Item#	Description	Watts	Volts	CRI	CCT	Total Lumens*	Lumens / Watt	Width	Height	Ext.	Equivalent
65-059	LED WALL PACK 160W BRONZE/ BOROSILICATE GLASS	160	120~277	↑75	5000K	15,775	99	18"	9.84"	13"	400W MET. HAL.

* Lumens measured at LED source

Pack: 1

22W LED Flood Light

Bronze Finish / Tempered Glass

These compact, powerful LED flood lights offer all the lighting of older technologies at a fraction of the operating cost. A combination of practicality and aesthetics, they deliver precise optical control, greater lighting performance and add to the exterior appearance of any property. They are constructed of rugged die cast aluminum with UV stabilized powder coated Bronze finish with heat and impact resistant tempered glass. They are IP65 rated, CUL wet location listed and offer multiple mounting options.

Features:

- DLC & UL listed
- IP65 Rated enclosure
- Die-cast aluminum body
- UV stabilized powder coated finish
- Suitable for wet locations
- Heat and impact resistant tempered glass
- 5 Year warranty

Specifications:

- 22W
- 1,753 Lumens*
- 120~277V
- 5000K
- 75+ CRI
- 70-100W MH Equivalent
- Operating temperature: –40°C to 40°C
- 50,000 Hour life

Item no. **65-070**

Dimensions

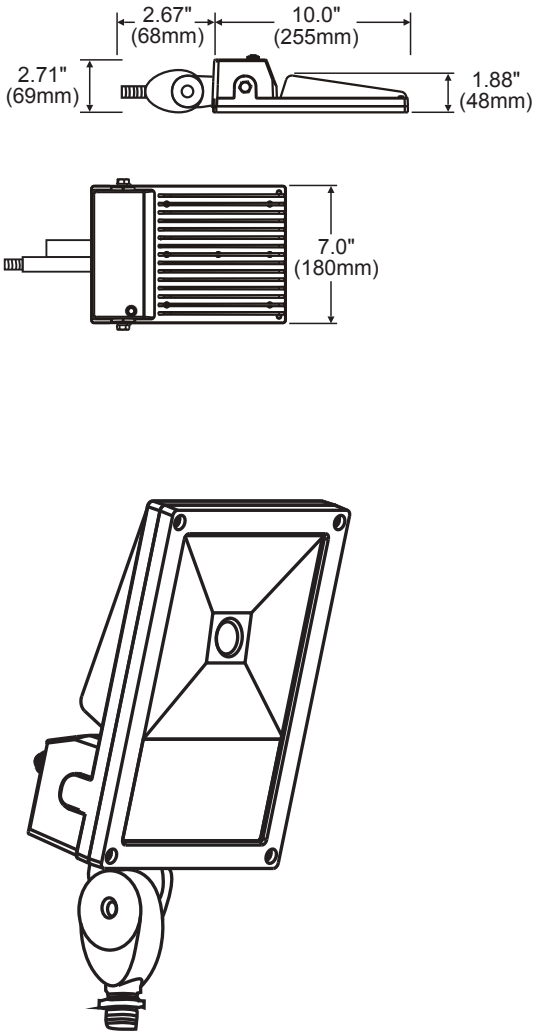

Photometrics

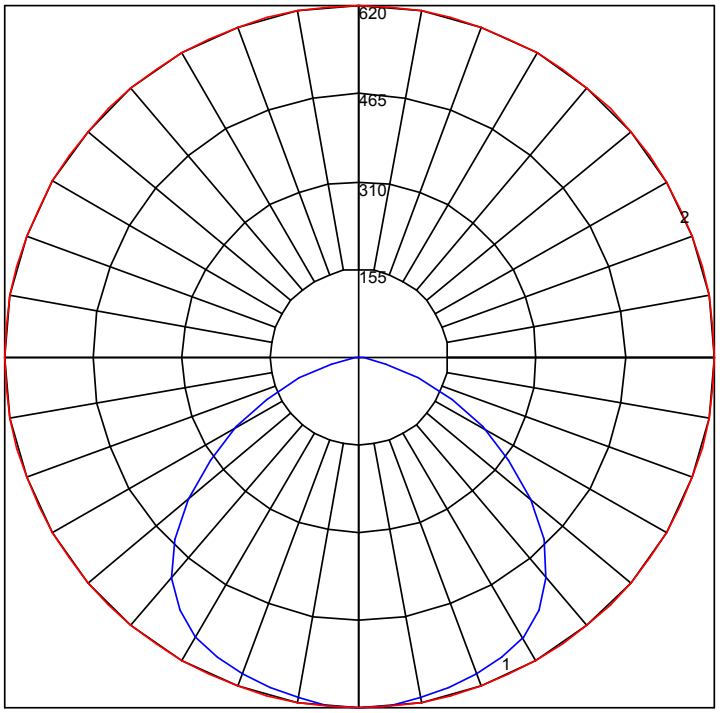

Maximum Candela = 620.12 Located At Horizontal Angle = 0, Vertical Angle = 0
1 - Vertical Plane Through Horizontal Angles (0 - 180) (Through Max. Cd.)
2 - Horizontal Cone Through Vertical Angle (0) (Through Max. Cd.)

22W LED Flood Light

LISTED
WET LOCATION

Item#	Description	Watts	Volts	CRI	CCT	Total Lumens*	Lumens / Watt	Width	Height	Ext.	Equivalent
65-070	LED FLOOD LIGHT 22W BRONZE FINISH	22	120~277	↑75	5000K	1,753	83	7"	2.71"	10"	70-100W MET. HAL.

* Lumens measured at LED source

Pack: 1

52W LED Flood Light

Bronze Finish / Tempered Glass

These compact, powerful LED flood lights offer all the lighting of older technologies at a fraction of the operating cost. A combination of practicality and aesthetics, they deliver precise optical control, greater lighting performance and add to the exterior appearance of any property. They are constructed of rugged die cast aluminum with UV stabilized powder coated Bronze finish with heat and impact resistant tempered glass. They are IP65 rated, CUL wet location listed and offer multiple mounting options.

Features:

- DLC & UL listed
- IP65 Rated enclosure
- Die-cast aluminum body
- UV stabilized powder coated finish
- Suitable for wet locations
- Heat and impact resistant tempered glass
- 5 Year warranty

Specifications:

- 52W
- 5,469 Lumens*
- 120~277V
- 5000K
- 75+ CRI
- 150-200W MH Equivalent
- Operating temperature: –40°C to 40°C
- 50,000 Hour life

Item no. **65-069**

Dimensions

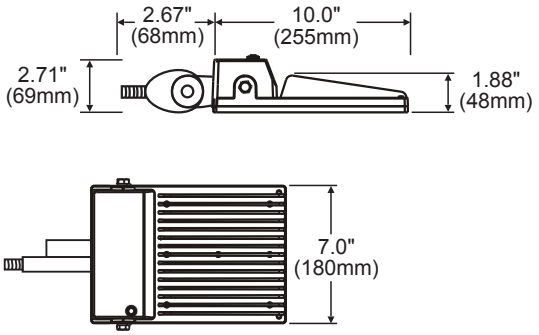

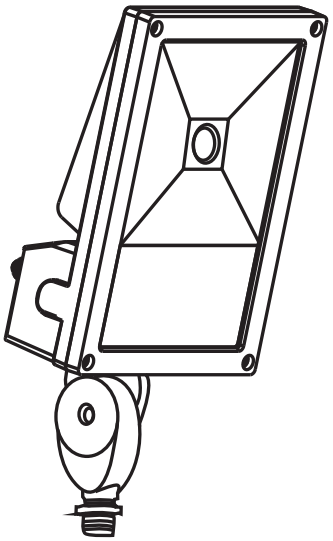

Photometrics

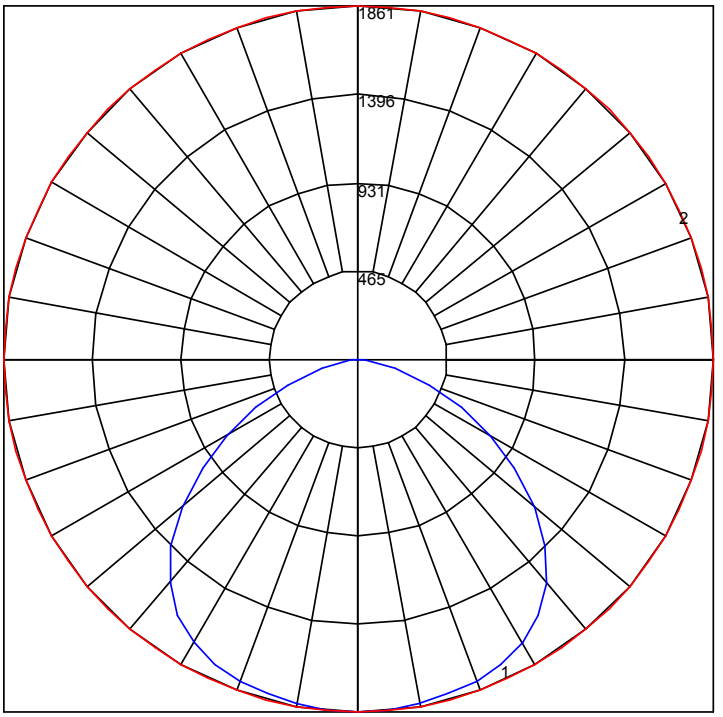

Maximum Candela = 1861 Located At Horizontal Angle = 0, Vertical Angle = 0
1 - Vertical Plane Through Horizontal Angles (0 - 180) (Through Max. Cd.)
2 - Horizontal Cone Through Vertical Angle (0) (Through Max. Cd.)

52W LED Flood Light

LISTED
WET LOCATION

Item#	Description	Watts	Volts	CRI	CCT	Total Lumens*	Lumens / Watt	Width	Height	Ext.	Equivalent
65-069	LED FLOOD LIGHT 52W BRONZE FINISH	52	120~277	↑75	5000K	5,469	106	7"	2.71"	10"	150-200W MET. HAL.

* Lumens measured at LED source

Pack: 1

22W LED Flood Light

Bronze Finish / Tempered Glass

These LED flood lights offer high lumen output from a basic, rugged enclosure. Die cast aluminum with a Bronze UV stabilized powder coated finish and heat and impact resistant tempered glass make this the perfect fixture to stand up to the elements. They are IP65 and CUL wet location listed and deliver all the low maintenance and energy savings LED have to offer.

Features:

- DLC & UL listed
- IP65 Rated enclosure
- Die-cast aluminum body
- UV stabilized powder coated finish
- 1/2" threaded knuckle mount
- Suitable for wet locations
- Heat and impact resistant tempered glass
- 5 Year warranty

Specifications:

- 22W
- 1,555 Lumens*
- 120~277V
- 5000K
- 75+ CRI
- 70-100W MH Equivalent
- Operating temperature: –40°C to 40°C
- 50,000 Hour life

Item no. **65-071**

Dimensions

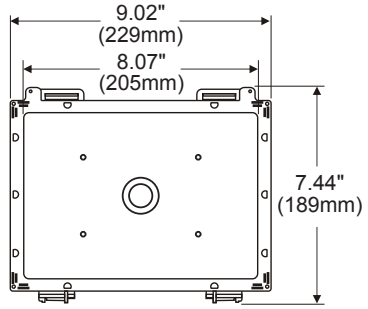

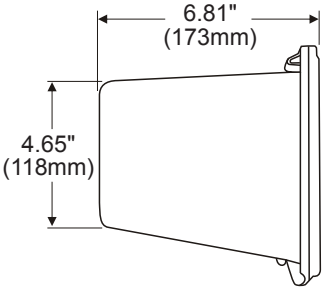

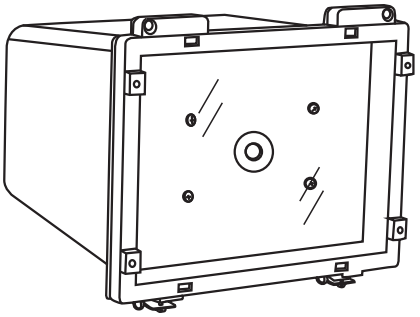

Photometrics

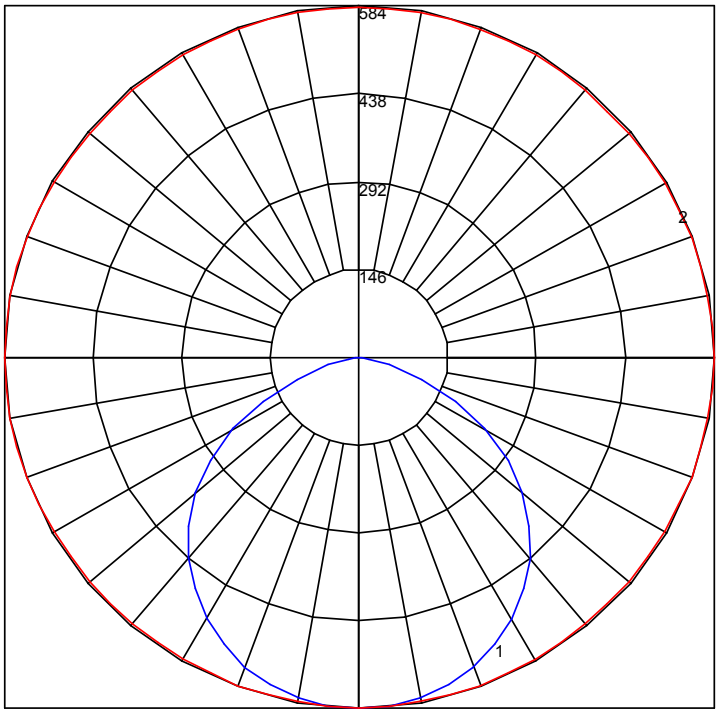

Maximum Candela = 584 Located At Horizontal Angle = 0, Vertical Angle = 5
1 - Vertical Plane Through Horizontal Angles (0 - 180) (Through Max. Cd.)
2 - Horizontal Cone Through Vertical Angle (5) (Through Max. Cd.)

22W LED Flood Light

LISTED
WET LOCATION

Item#	Description	Watts	Volts	CRI	CCT	Total Lumens*	Lumens / Watt	Width	Height	Ext.	Equivalent
65-071	LED SQUARE FLOOD LIGHT 22W BRONZE FINISH	22	120~277	↑75	5000K	1,555	77	9.02"	7.44"	6.81"	70-100W MET. HAL.

* Lumens measured at LED source

Pack: 1

43W LED Flood Light

Bronze Finish / Tempered Glass

These LED flood lights offer high lumen output from a basic, rugged enclosure. Die cast aluminum with a Bronze UV stabilized powder coated finish and heat and impact resistant tempered glass make this the perfect fixture to stand up to the elements. They are IP65 and CUL wet location listed and deliver all the low maintenance and energy savings LED have to offer.

Features:

- DLC & UL listed
- IP65 Rated enclosure
- Die-cast aluminum body
- Trunnion mount
- UV stabilized powder coated finish
- Suitable for wet locations
- Heat and impact resistant tempered glass
- 5 Year warranty

Specifications:

- 43W
- 3,536 Lumens*
- 120~277V
- 5000K
- 75+ CRI
- 100-150W MH Equivalent
- Operating temperature: –40°C to 40°C
- 50,000 Hour life

Item no. **65-072**

Dimensions

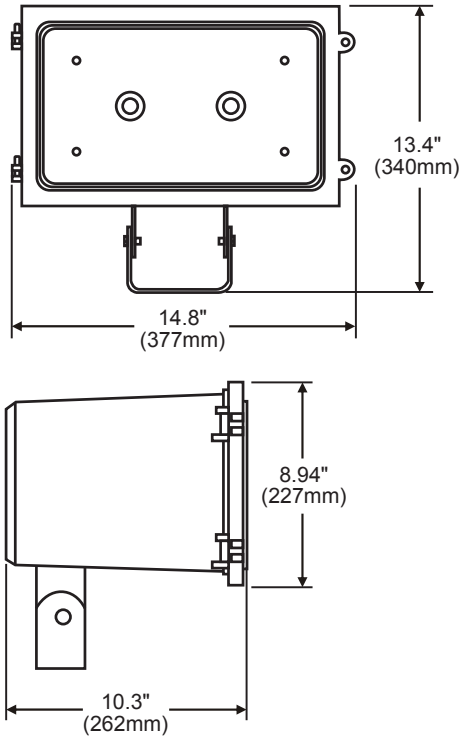

Photometrics

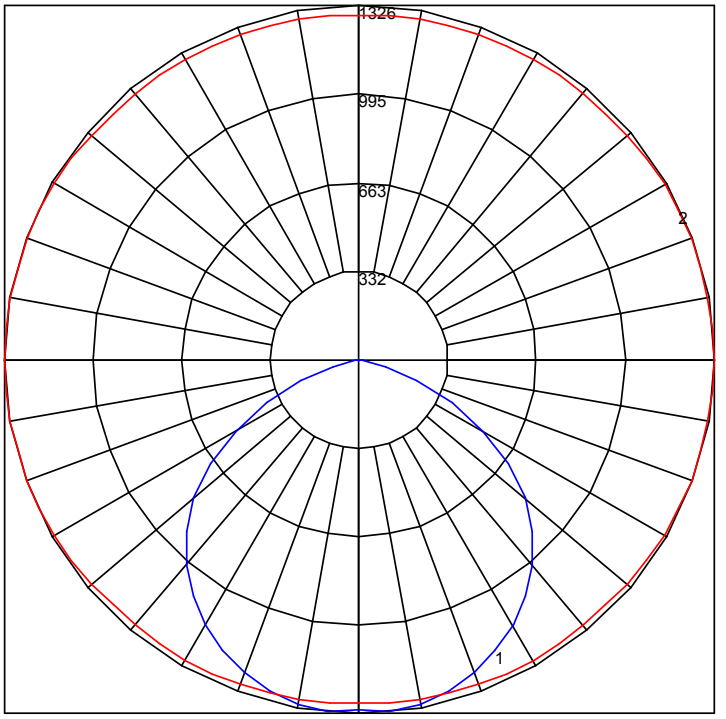

Maximum Candela = 1326 Located At Horizontal Angle = 0, Vertical Angle = 5
1 - Vertical Plane Through Horizontal Angles (0 - 180) (Through Max. Cd.)
2 - Horizontal Cone Through Vertical Angle (5) (Through Max. Cd.)

Trunnion Dimensions

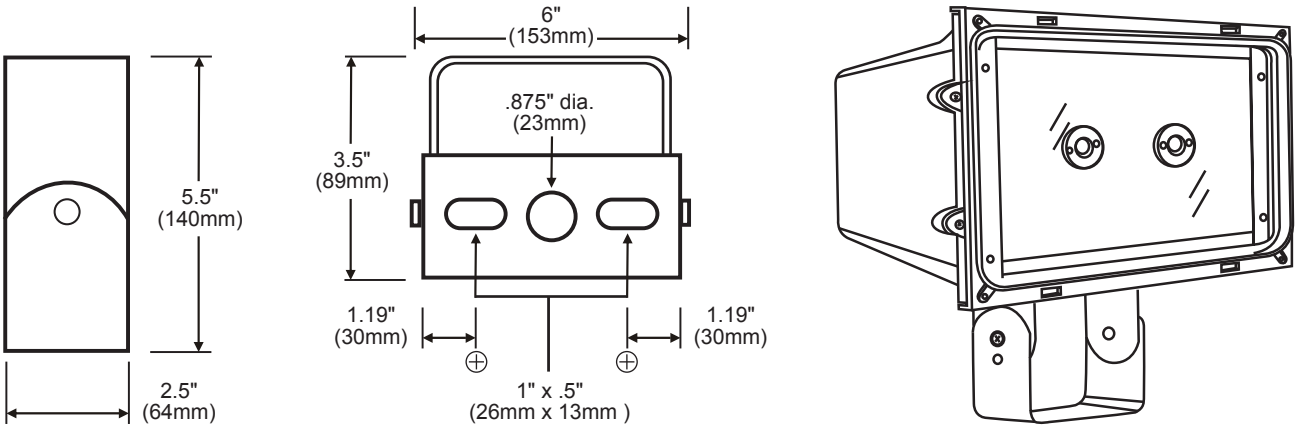

43W LED Flood Light

LISTED
WET LOCATION

Item#	Description	Watts	Volts	CRI	CCT	Total Lumens*	Lumens / Watt	Width	Height	Ext.	Equivalent
65-072	LED SQUARE FLOOD LIGHT 43W BRONZE FINISH	43.5	120~277	↑75	5000K	3,536	79	14.84"	13.4"	10.3"	100-150W MET. HAL.

* Lumens measured at LED source

Pack: 1

33W LED Low Profile Canopy Fixture

Bronze Finish / Glare Free Lens

This slim, low profile LED fixture can be mounted directly to ceilings or as a ¾" pendant-mount. It's constructed of rugged, die cast aluminum and finished in Bronze with UV stabilized powder coating. It comes with a tough, glare free lens and our simple quick-mount system for easy installation. They are CUL wet location listed making them suitable for any environment. It's the perfect high efficiency, low maintenance replacement for metal halide lamps and fixtures.

Features:

- DLC & UL listed
- Die-cast aluminum body
- UV stabilized powder coated finish
- Ceiling or 3/4" pendant mounting
- Suitable for wet locations
- Glare free lens
- 5 Year warranty

Specifications:

- 33W
- 2,976 Lumens*
- 120~277V
- 5000K
- 75+ CRI
- 100-150W MH Equivalent
- Operating temperature: –40°C to 40°C
- 50,000 Hour life

Item no. **65-073**

Dimensions

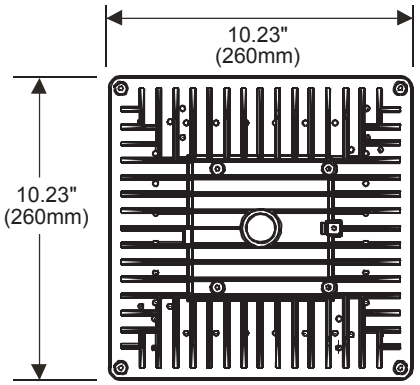

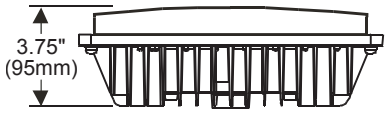

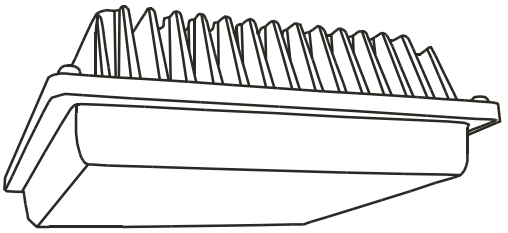

Photometrics

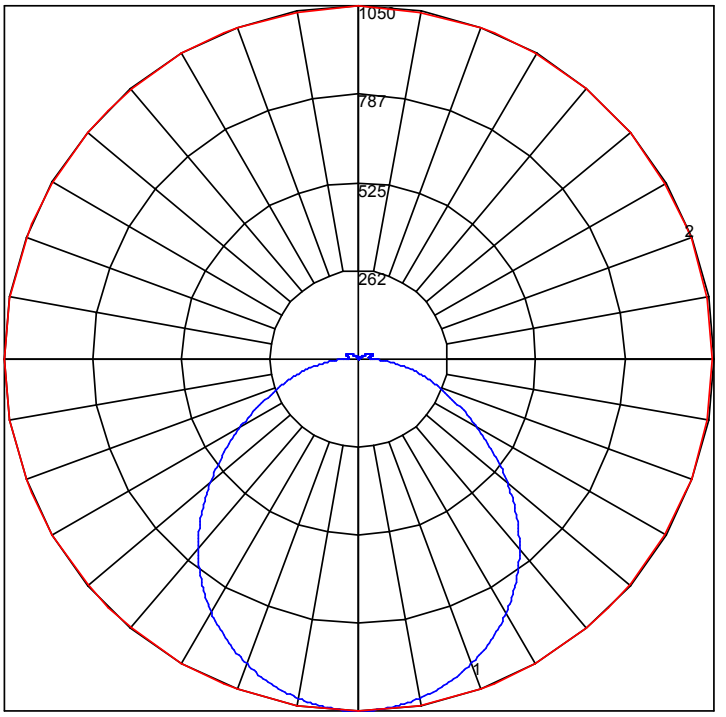

Maximum Candela = 1049.844 Located At Horizontal Angle = 90, Vertical Angle = .5
1 - Vertical Plane Through Horizontal Angles (90 - 270) (Through Max. Cd.)
2 - Horizontal Cone Through Vertical Angle (.5) (Through Max. Cd.)

33W Low Profile LED Canopy Fixture

LISTED
WET LOCATION

Item#	Description	Watts	Volts	CRI	CCT	Total Lumens*	Lumens / Watt	Width	Height	Ext.	Equivalent
65-073	LED CANOPY FIXTURE 33W BRONZE FINISH	33	120~277	↑75	5000K	2,976	90	10.23"	3.75"	N/A	100-150W MET. HAL.

* Lumens measured at LED source

Pack: 6

58W LED Low Profile Canopy Fixture

Bronze Finish / Glare Free Lens

This slim, low profile LED fixture can be mounted directly to ceilings or as a ¾" pendant-mount. It's constructed of rugged, die cast aluminum and finished in Bronze with UV stabilized powder coating. It comes with a tough, glare free lens and our simple quick-mount system for easy installation. They are CUL wet location listed making them suitable for any environment. It's the perfect high efficiency, low maintenance replacement for metal halide lamps and fixtures.

Features:

- DLC & UL listed
- Die-cast aluminum body
- UV stabilized powder coated finish
- Ceiling or 3/4" pendant mounting
- Suitable for wet locations
- Glare free lens
- 5 Year warranty

Specifications:

- 58W
- 5,524 Lumens*
- 120~277V
- 5000K
- 75+ CRI
- 150-200W MH Equivalent
- Operating temperature: –40°C to 40°C
- 50,000 Hour life

Item no. **65-074**

Dimensions

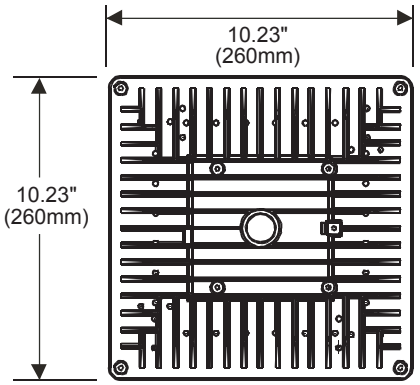

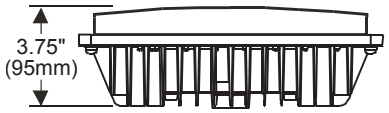

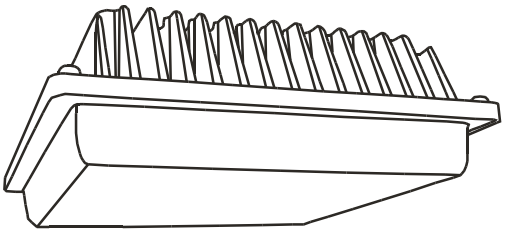

Photometrics

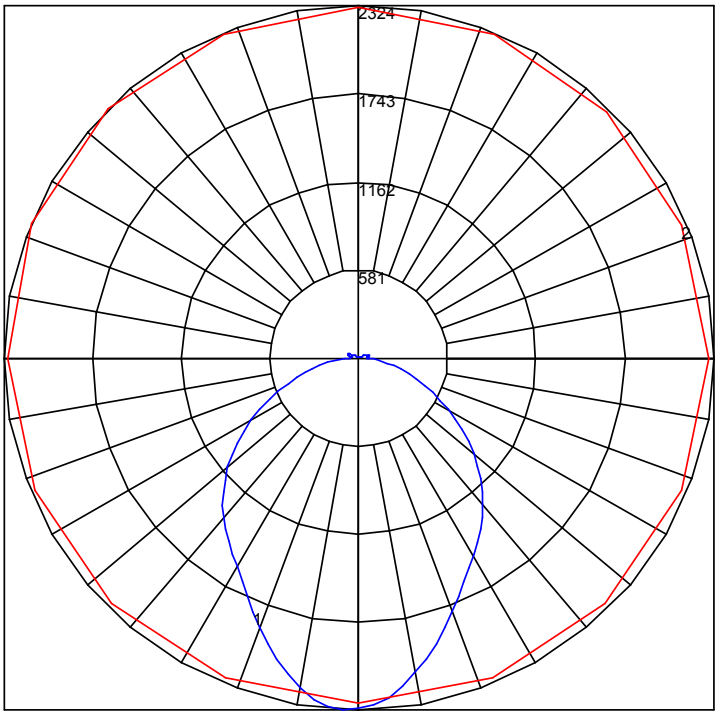

Maximum Candela = 2323.63 Located At Horizontal Angle = 157.5, Vertical Angle = 2.5
1 - Vertical Plane Through Horizontal Angles (157.5 - 337.5) (Through Max. Cd.)
2 - Horizontal Cone Through Vertical Angle (2.5) (Through Max. Cd.)

58W Low Profile LED Canopy Fixture

Item#	Description	Watts	Volts	CRI	CCT	Total Lumens*	Lumens / Watt	Width	Height	Ext.	Equivalent
65-074	LED CANOPY FIXTURE 58W BRONZE FINISH	58	120~277	↑75	5000K	5,524	95	10.23"	3.75"	N/A	150-200W MET. HAL.

* Lumens measured at LED source

Pack: 6

40W LED Standard Profile Canopy Fixture

Bronze Finish / Acrylic Diffuser

The cost-saving answer to older technologies, this LED canopy fixture can step in and get the job done with less energy use and less maintenance. Bronze, UV stabilized powder coated finish, die cast aluminum body and high impact acrylic diffuser make this an especially rugged, long lasting fixture. It's CUL wet location listed and will stand up in any environment.

Features:

- DLC & UL listed
- Die-cast aluminum body
- UV stabilized powder coated finish
- Ceiling or 1/2" pendant mounting
- Suitable for wet locations
- High impact acrylic diffuser
- 5 Year warranty

Specifications:

- 40W
- 3,706 Lumens*
- 120~277V
- 5000K
- 75+ CRI
- 100-150W MH Equivalent
- Operating temperature: –40°C to 40°C
- 40,000 Hour life

Item no. **65-076**

Dimensions

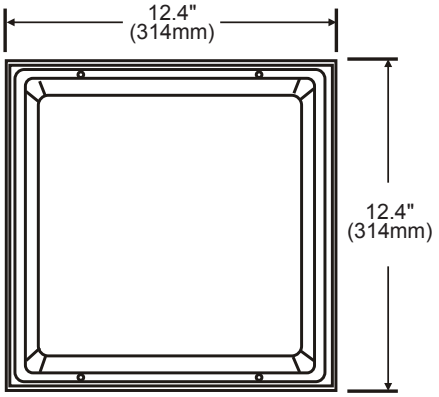

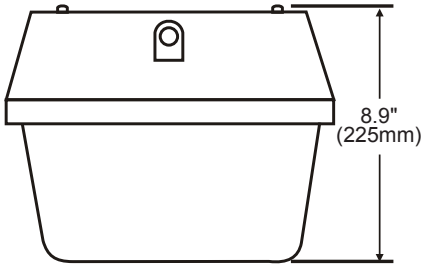

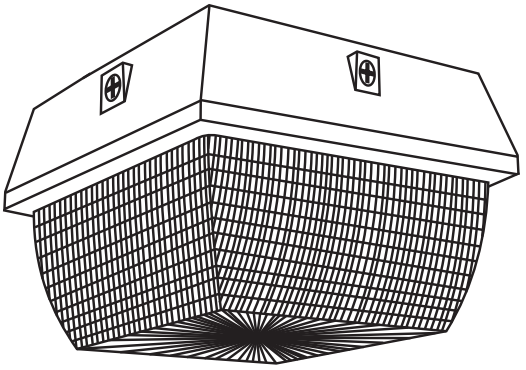

Photometrics

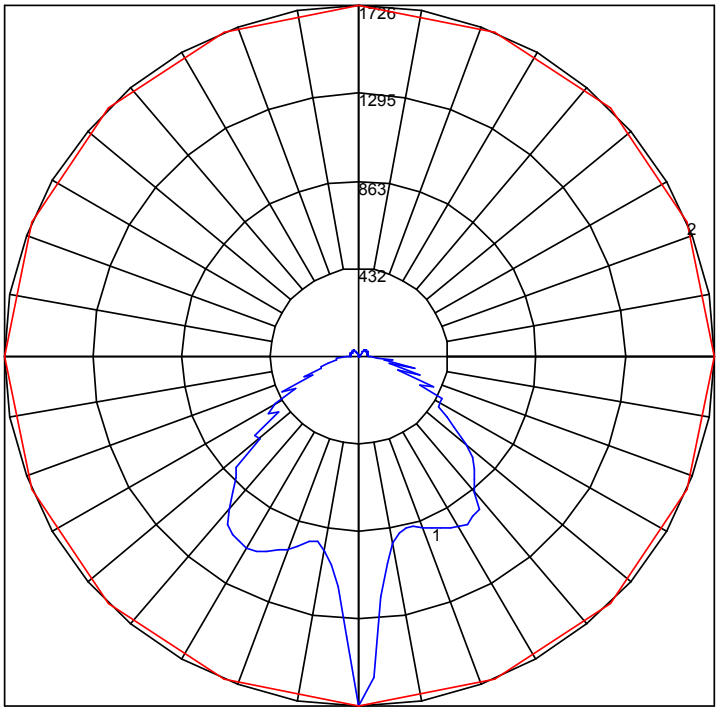

Maximum Candela = 1726.17 Located At Horizontal Angle = 0, Vertical Angle = 0
1 - Vertical Plane Through Horizontal Angles (0 - 180) (Through Max. Cd.)
2 - Horizontal Cone Through Vertical Angle (0) (Through Max. Cd.)

40W Standard Profile LED Canopy Fixture

Item#	Description	Watts	Volts	CRI	CCT	Total Lumens*	Lumens / Watt	Width	Height	Ext.	Equivalent
65-076	LED CEILING/WALL PACK 40W BRONZE FINISH/ACRYLIC DIFFUSER	40	120~277	↑75	5000K	3,706	93	12.4"	8.9"	N/A	100-150W MET. HAL.

* Lumens measured at LED source

Pack: 6

55W LED Standard Profile Canopy Fixture

Bronze Finish / Acrylic Diffuser

The cost-saving answer to older technologies, this LED canopy fixture can step in and get the job done with less energy use and less maintenance. Bronze, UV stabilized powder coated finish, die cast aluminum body and high impact acrylic diffuser make this an especially rugged, long lasting fixture. It's CUL wet location listed and will stand up in any environment.

Features:

- DLC & UL listed
- Die-cast aluminum body
- UV stabilized powder coated finish
- Ceiling or 1/2" pendant mounting
- Suitable for wet locations
- High impact acrylic diffuser
- 5 Year warranty

Specifications:

- 55W
- 4,285 Lumens*
- 120~277V
- 5000K
- 75+ CRI
- 150-200W MH Equivalent
- Operating temperature: –40°C to 40°C
- 40,000 Hour life

Item no. **65-075**

Dimensions

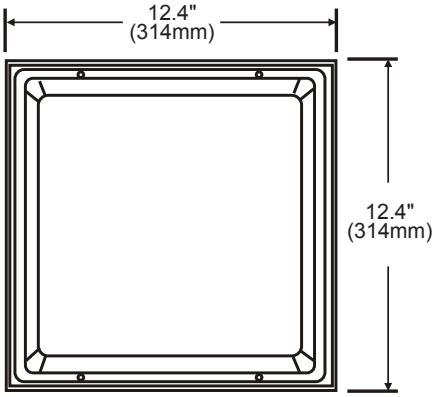

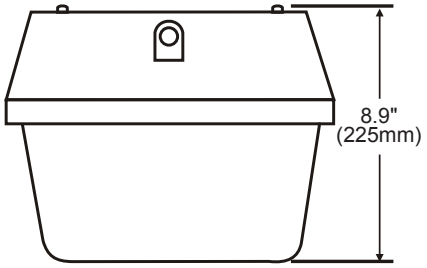

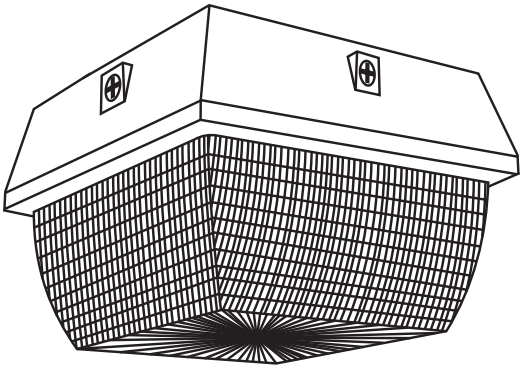

Photometrics

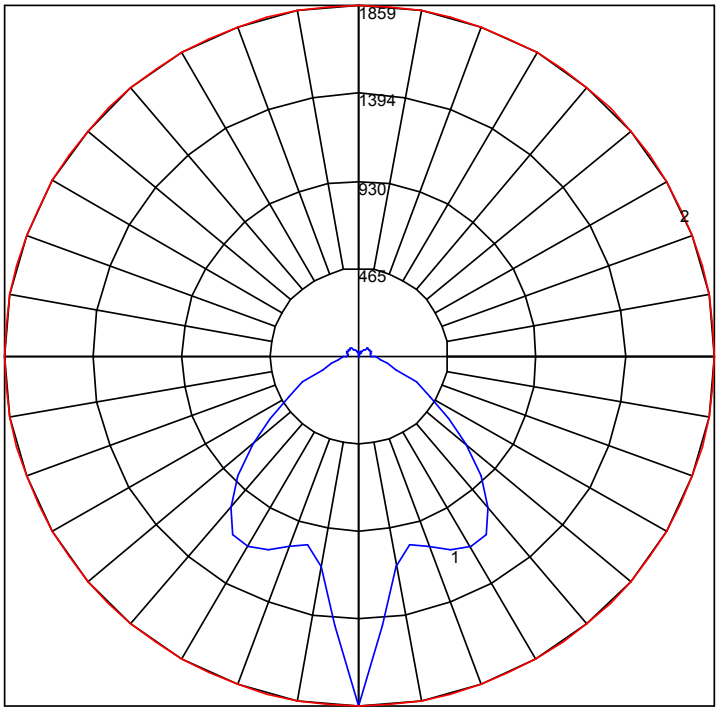

Maximum Candela = 1859 Located At Horizontal Angle = 0, Vertical Angle = 0
1 - Vertical Plane Through Horizontal Angles (0 - 180) (Through Max. Cd.)
2 - Horizontal Cone Through Vertical Angle (0) (Through Max. Cd.)

55W Standard Profile LED Canopy Fixture

LISTED
WET LOCATION

Item#	Description	Watts	Volts	CRI	CCT	Total Lumens*	Lumens / Watt	Width	Height	Ext.	Equivalent
65-075	LED CEILING/WALL PACK 55W BRONZE FINISH/ACRYLIC DIFFUSER	55	120~277	↑75	5000K	4,285	78	12.4"	8.9"	N/A	150-200W MET. HAL.

* Lumens measured at LED source

Pack: 6

55W LED Slim Profile Hi-Bay / Canopy Fixture

Gray Finish

This heavy duty die cast aluminum LED fixture has a slim profile making it perfect for both high ceilings and canopy applications. It has a Gray UV stabilized powder coated finish and is CUL wet location listed giving it the ability to stand up well in any environment. The quick mount system makes installation easy, especially in tight spaces.

Features:

- DLC & UL listed
- Die-cast aluminum body
- UV stabilized powder coated finish
- Quick mount installation
- Suitable for wet locations
- 5 Year warranty

Specifications:

- 55W
- 4,310 Lumens*
- 120~277V
- 5000K
- 75+ CRI
- 100-150W MH Equivalent
- Operating temperature: –40°C to 40°C
- 50,000 Hour life

Item no. **65-077**

Dimensions

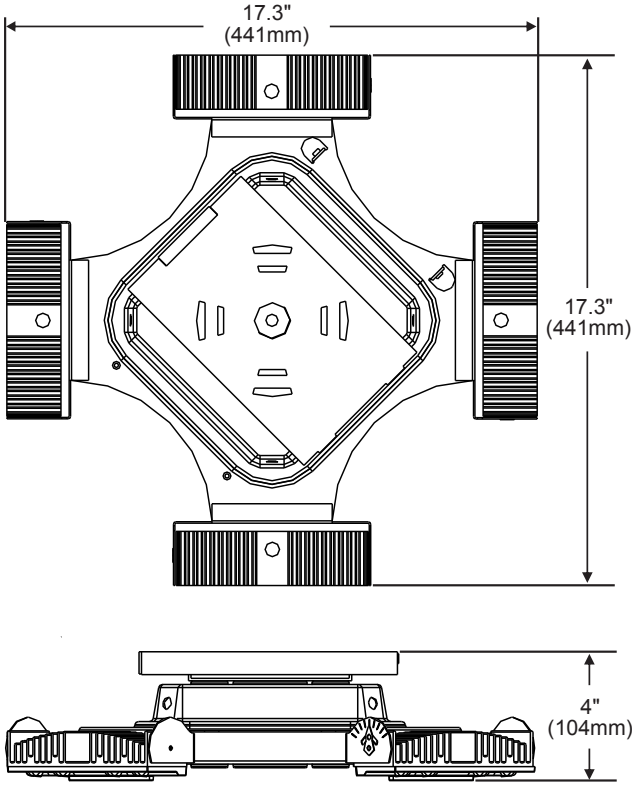

Photometrics

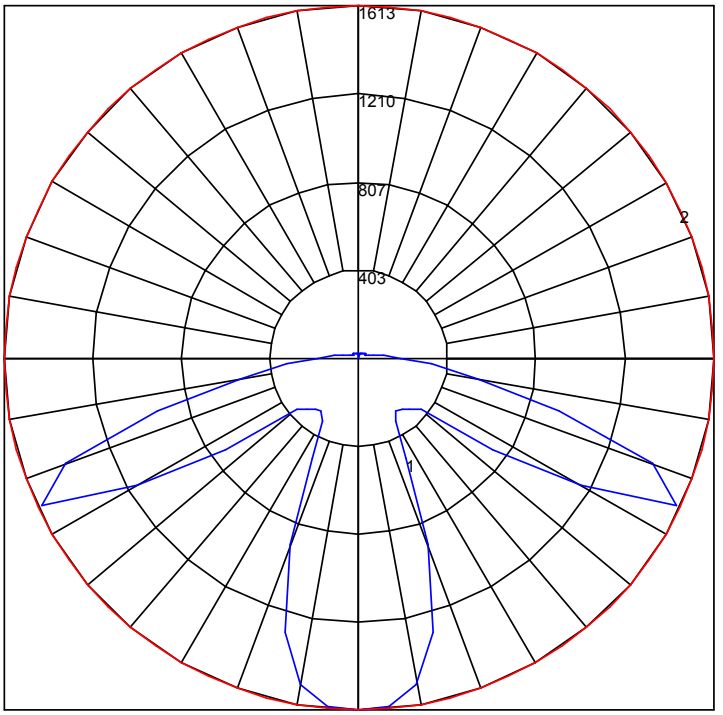

Maximum Candela = 1613 Located At Horizontal Angle = 0, Vertical Angle = 0
1 - Vertical Plane Through Horizontal Angles (0 - 180) (Through Max. Cd.)
2 - Horizontal Cone Through Vertical Angle (0) (Through Max. Cd.)

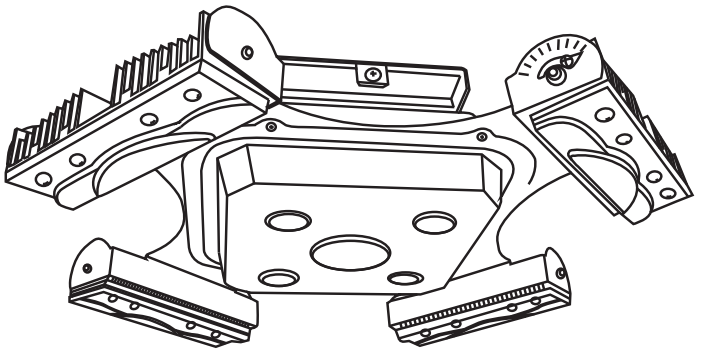

55W Slim Profile Hi-Bay LED Fixture

Item#	Description	Watts	Volts	CRI	CCT	Total Lumens*	Lumens / Watt	Width	Height	Ext.	Equivalent
65-077	LED MODULAR CANOPY MOUNT GRAY FINISH	55	120~277	↑75	5000K	4,310	78	17.3"	4"	N/A	100-150W MET. HAL.

* Lumens measured at LED source

Pack: 1

160W LED Hi-Bay Fixture

White Finish

These high performance LED high-bay fixtures are designed to be places at a 20′ to 35′ height with minimal glare. They are finished in White over a heavy aluminum body and have an anodized aluminum reflector. Light is dispersed through a tempered glass lens. A unique quick connect cable makes for easy maintenance. They come with quick mount design feature and are CUL wet location listed. These are a powerful yet energy efficient and low maintenance replacement for older high-bay technologies.

Features:

- DLC & UL listed
- Heavy duty aluminum body
- Anodized aluminum reflector
- UV stabilized powder coated finish
- Quick mount installation
- Suitable for wet locations
- Optional glass and clamp band
- 5 Year warranty

Specifications:

- 160W
- 17,929 Lumens*
- 120~277V
- 5000K
- 75+ CRI
- 250W MH Equivalent
- Operating temperature: –40°C to 40°C
- 50,000 Hour life

Item no. **65-081**

Dimensions

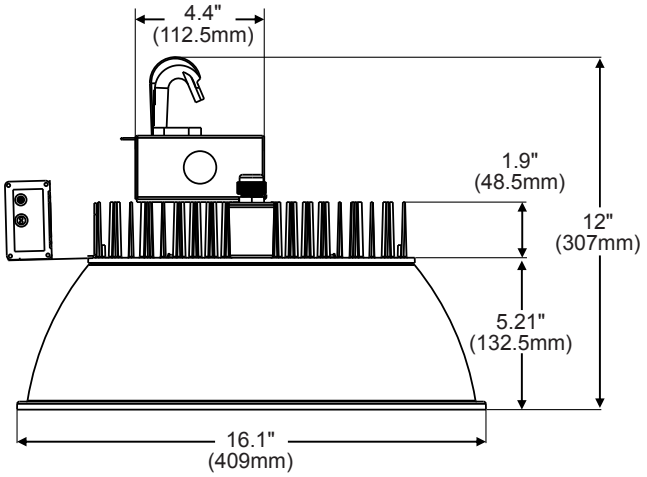

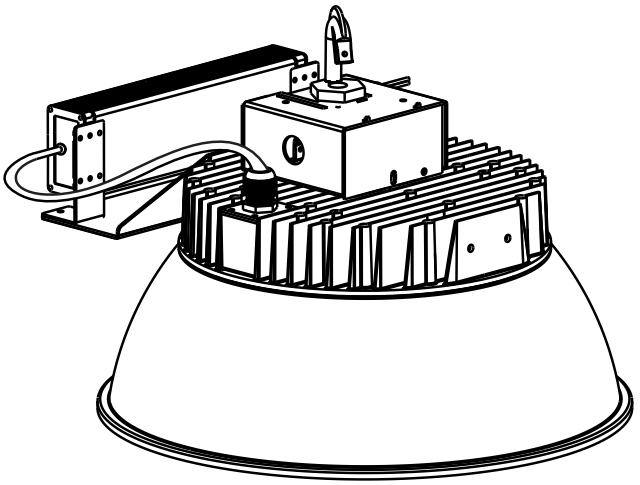

Photometrics

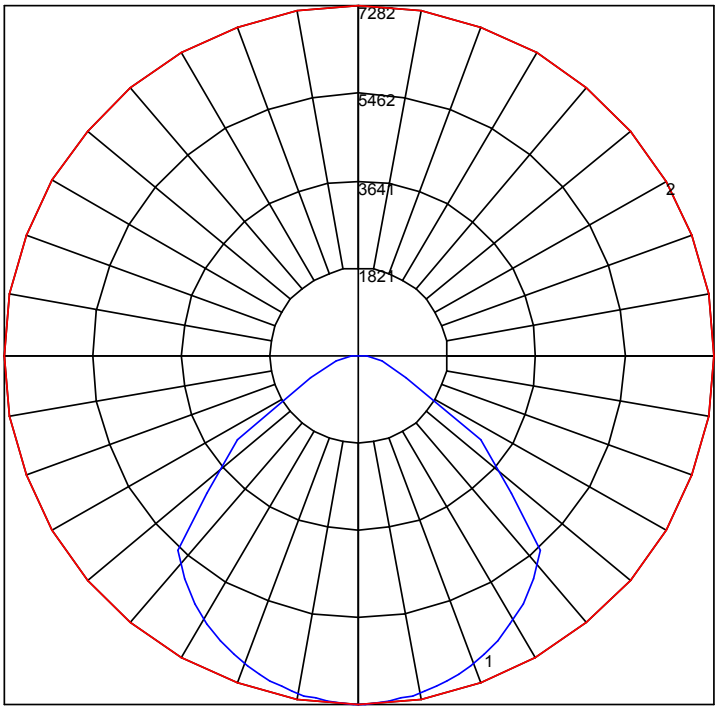

Maximum Candela = 7282 Located At Horizontal Angle = 0, Vertical Angle = 0
1 - Vertical Plane Through Horizontal Angles (0 - 180) (Through Max. Cd.)
2 - Horizontal Cone Through Vertical Angle (0) (Through Max. Cd.)

160W Hi-Bay LED Fixture

LISTED
WET LOCATION

Item#	Description	Watts	Volts	CRI	CCT	Total Lumens*	Lumens / Watt	Width	Height	Ext.	Equivalent
65-081	LED HIGHBAY 160W ANODIZED ALUMINUM REFL/TEMPERED GLASS	160	120~277	↑75	5000K	17,929	100	16.1"	12"	N/A	250W MET. HAL.

* Lumens measured at LED source

Pack: 1

240W LED Hi-Bay Fixture

White Finish

These high performance LED high-bay fixtures are designed to be places at a 20′ to 35′ height with minimal glare. They are finished in White over a heavy aluminum body and have an anodized aluminum reflector. Light is dispersed through a tempered glass lens. A unique quick connect cable makes for easy maintenance. They come with quick mount design feature and are CUL wet location listed. These are a powerful yet energy efficient and low maintenance replacement for older high-bay technologies.

Features:

- DLC & UL listed
- Heavy duty aluminum body
- Anodized aluminum reflector
- UV stabilized powder coated finish
- Quick mount installation
- Suitable for wet locations
- Optional glass and clamp band
- 5 Year warranty

Specifications:

- 240W
- 26,433 Lumens*
- 120~277V
- 5000K
- 75+ CRI
- 400W MH Equivalent
- Operating temperature: –40°C to 40°C
- 50,000 Hour life

Item no. **65-080**

Dimensions

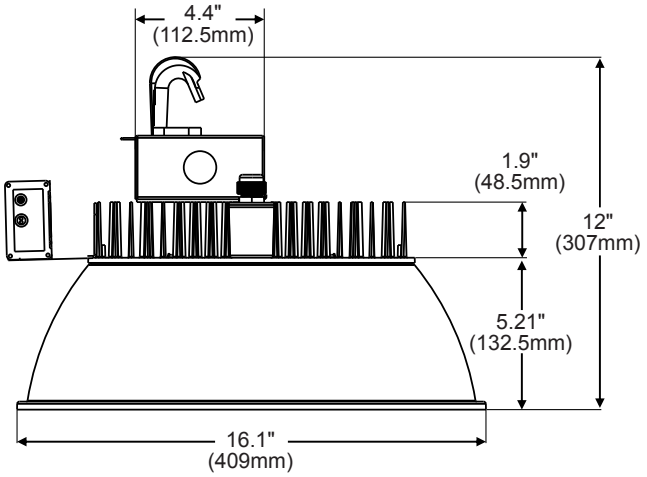

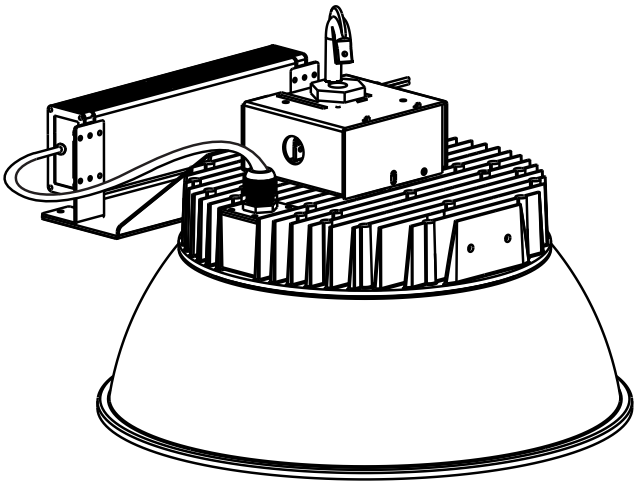

Photometrics

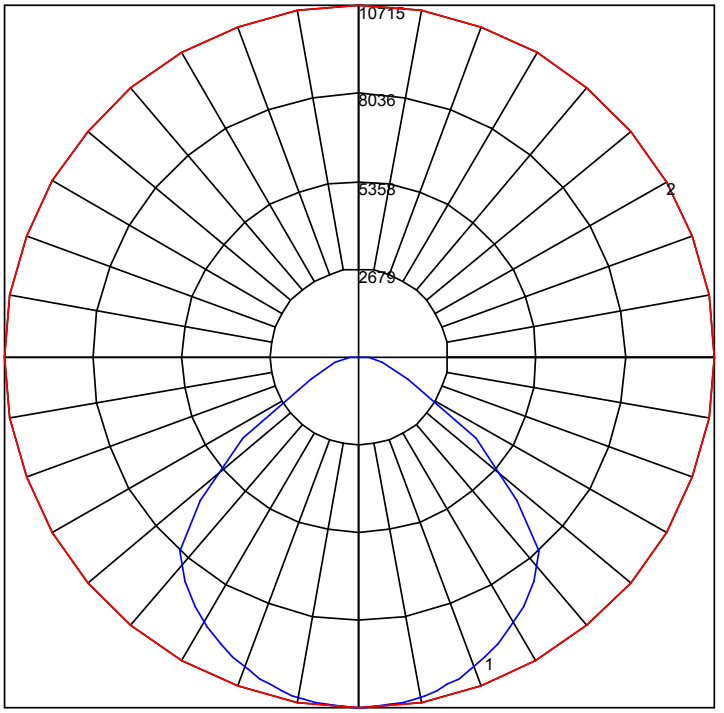

Maximum Candela = 10715 Located At Horizontal Angle = 0, Vertical Angle = 0
1 - Vertical Plane Through Horizontal Angles (0 - 180) (Through Max. Cd.)
2 - Horizontal Cone Through Vertical Angle (0) (Through Max. Cd.)

240W Hi-Bay LED Fixture

LISTED
WET LOCATION

Item#	Description	Watts	Volts	CRI	CCT	Total Lumens*	Lumens / Watt	Width	Height	Ext.	Equivalent
65-080	LED HIGHBAY 240W ANODIZED ALUMINUM REFL/TEMPERED GLASS	240	120~277	↑75	5000K	26,433	100	16.1"	12"	N/A	400W MET. HAL.

* Lumens measured at LED source

Pack: 1

41W LED Wall Mount Carport/Parking Area Fixture

Gray Finish / Polycarbonate Diffuser

These powerful LED fixtures maintain all the traditional features of dusk-to-dawn fixtures but with the efficiency of LEDs for maximum energy savings and reduced maintenance costs. They have a high-impact polycarbonate diffuser for bright, consistent light output, and are finished in UV stabilized powder coated gray. They are IP65 rated and CUL wet location listed making it perfect for any environment.

Features:

- DLC & UL listed
- Die-cast aluminum body
- UV stabilized powder coated finish
- Uniform light distribution
- Suitable for wet locations
- Photo control – On at dusk / Off at dawn
- 5 Year warranty

Specifications:

- 41W
- 3,194 Lumens*
- 120V
- 5000K
- 75+ CRI
- 150-200W MH Equivalent
- Operating temperature: –40°C to 40°C
- 40,000 Hour life

Item no. **65-055**

Dimensions

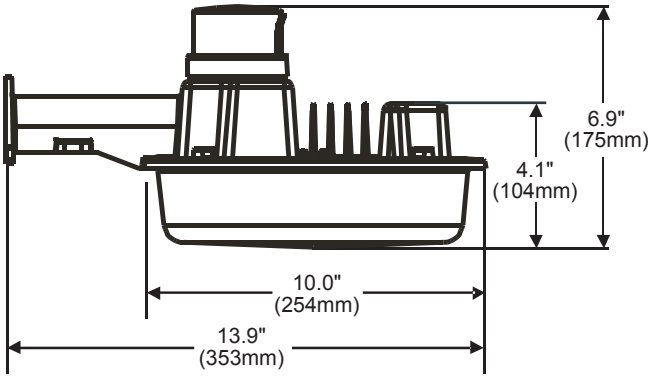

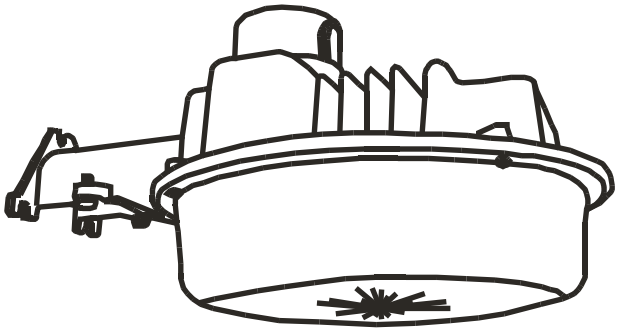

Photometrics

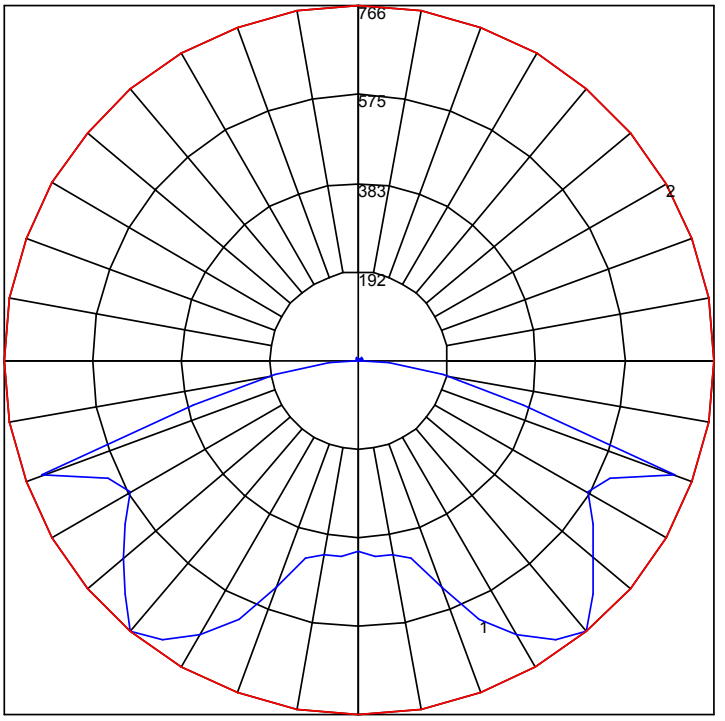

Maximum Candela = 766.28 Located At Horizontal Angle = 0, Vertical Angle = 40
1 - Vertical Plane Through Horizontal Angles (0 - 180) (Through Max. Cd.)
2 - Horizontal Cone Through Vertical Angle (40) (Through Max. Cd.)

41W LED Carport/Parking Area Fixture

Item#	Description	Watts	Volts	CRI	CCT	Total Lumens*	Lumens / Watt	Width	Height	Ext.	Equivalent
65-055	LED AREA LIGHT 41W GRAY FINISH	41.39	120	↑75	5000K	3,194	77	10"	6.9"	13.9"	150-200W MET. HAL.

* Lumens measured at LED source

Pack: 1

60W LED Wall Mount Carport/Parking Area Fixture

Gray Finish / Polycarbonate Diffuser

These powerful LED fixtures maintain all the traditional features of dusk-to-dawn fixtures but with the efficiency of LEDs for maximum energy savings and reduced maintenance costs. They have a high-impact polycarbonate diffuser for bright, consistent light output, and are finished in UV stabilized powder coated gray. They are IP65 rated and CUL wet location listed making it perfect for any environment.

Features:

- DLC & UL listed
- Die-cast aluminum body
- UV stabilized powder coated finish
- Uniform light distribution
- Suitable for wet locations
- Photo control – On at dusk / Off at dawn
- 5 Year warranty

Specifications:

- 60W
- 5,542 Lumens*
- 120V
- 5000K
- 75+ CRI
- 200W MH Equivalent
- Operating temperature: –40°C to 40°C
- 40,000 Hour life

Item no. **65-054**

Dimensions

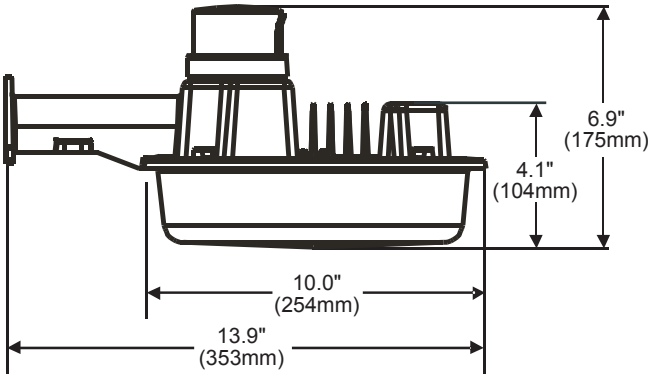

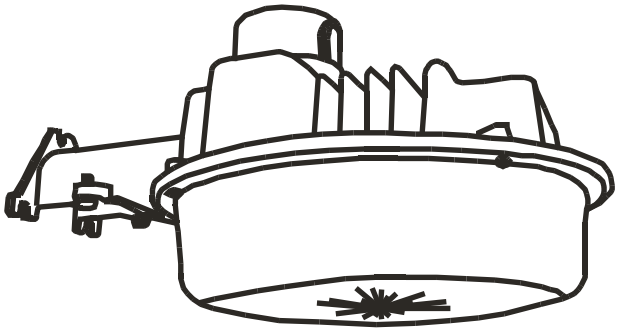

Photometrics

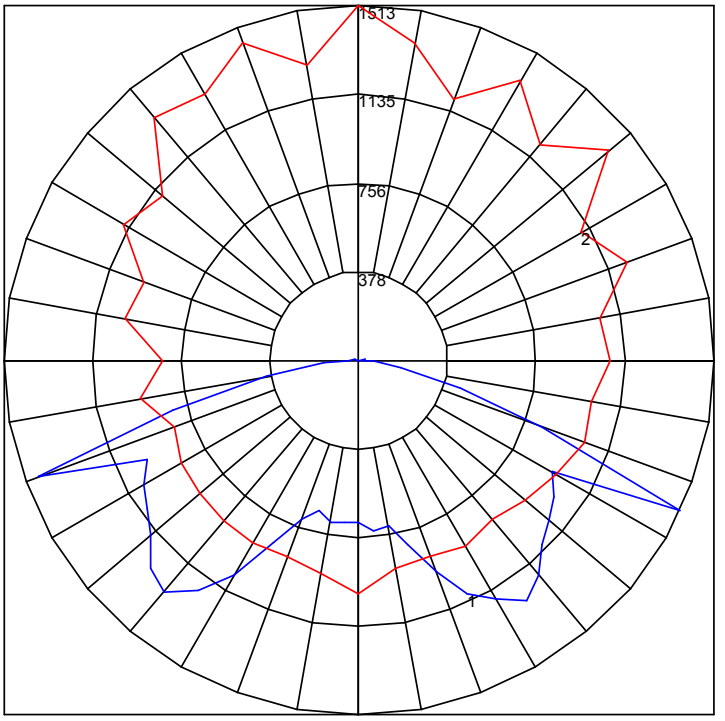

Maximum Candela = 1512.81 Located At Horizontal Angle = 90, Vertical Angle = 65
1 - Vertical Plane Through Horizontal Angles (90 - 270) (Through Max. Cd.)
2 - Horizontal Cone Through Vertical Angle (65) (Through Max. Cd.)

60W LED Carport/Parking Area Fixture

LISTED
WET LOCATION

Item#	Description	Watts	Volts	CRI	CCT	Total Lumens*	Lumens / Watt	Width	Height	Ext.	Equivalent
65-054	LED AREA LIGHT 41W GRAY FINISH	60	120	↑75	5000K	5,542	93	10"	6.9"	13.9"	200W MET. HAL.

* Lumens measured at LED source

Pack: 1

13W Wall LED Vapor Proof Fixture

Silver Finish

A rugged, vapor-proof fixture that's built to last with industrial-grade rubber gaskets and automotive grade aluminum, this LED fixture can stand up to the elements. It provides high performance lighting but uses very little power compared to older lighting technologies and requires less maintenance. The die-cast aluminum cage protects the glass and it's CUL wet location listed making it perfect for most any application, indoors or out. Comes in silver UV stabilized powder coated finish.

Features:

- UL listed
- Die-cast aluminum body
- UV stabilized powder coated finish
- 1/2" Conduit plugs – all four sides
- Suitable for wet locations
- 5 Year warranty

Specifications:

- 13W
- 850 Lumens*
- 120~277V
- 5000K
- 75+ CRI
- 50-70W MH Equivalent
- Operating temperature: –40°C to 40°C
- 35,000 Hour life

Item no. **65-078**

Dimensions

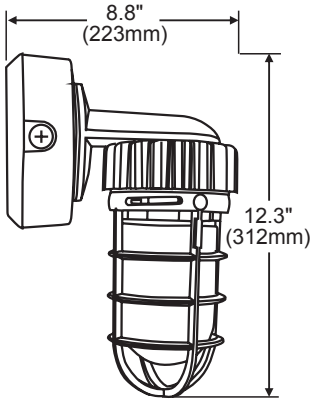

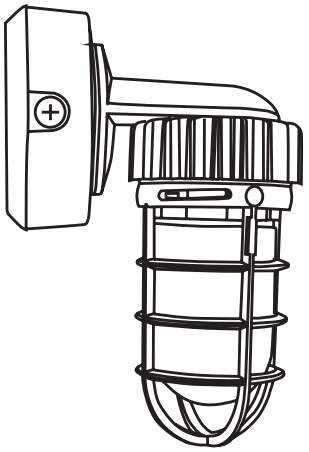

Photometrics

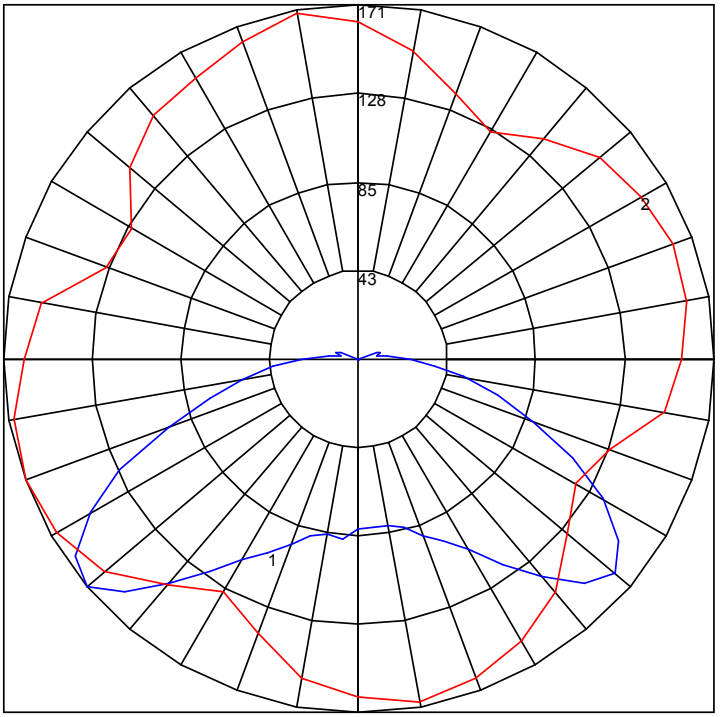

Maximum Candela = 170.65 Located At Horizontal Angle = 200, Vertical Angle = 50
1 - Vertical Plane Through Horizontal Angles (200 - 20) (Through Max. Cd.)
2 - Horizontal Cone Through Vertical Angle (50) (Through Max. Cd.)

13W Wall Vapor Proof LED Fixture

c UL us LISTED WET LOCATION

RoHS COMPLIANT

Item#	Description	Watts	Volts	CRI	CCT	Total Lumens*	Lumens / Watt	Width	Height	Ext.	Equivalent
65-078	LED VAPOR PROOF WALL MOUNT SILVER FINISH	13	120~277	↑75	5000K	850	65	8"	12.3"	8.8"	50-70W MET. HAL.

* Lumens measured at LED source

Pack: 6

13W Ceiling LED Vapor Proof Fixture

Silver Finish

This rugged LED fixture shares all the features, lighting capability and efficiency of its wall mounted cousin. The strong, cast aluminum cage protects the glass making it perfect for low ceiling/high-activity locations where protection is especially important. Long life LEDs reduce both maintenance and energy costs.

Features:

- UL listed
- Die-cast aluminum body
- UV stabilized powder coated finish
- 1/2" Conduit plugs – all four sides
- Suitable for wet locations
- 5 Year warranty

Specifications:

- 13W
- 850 Lumens*
- 120~277V
- 5000K
- 75+ CRI
- 50-70W MH Equivalent
- Operating temperature: –40°C to 40°C
- 35,000 Hour life

Item no. **65-079**

Dimensions

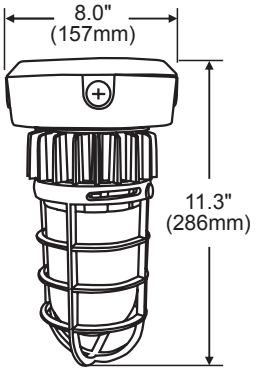

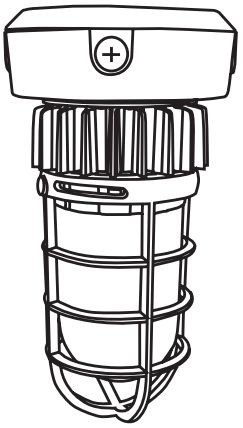

Photometrics

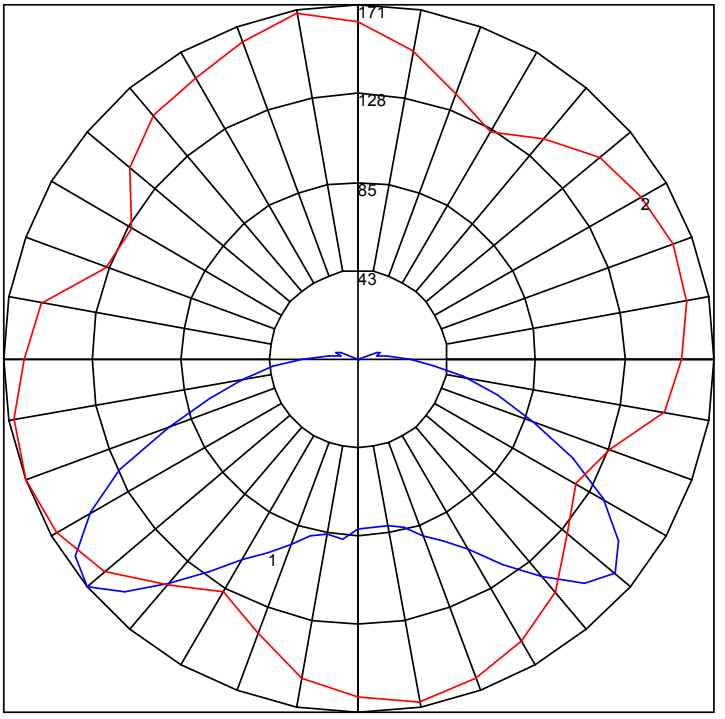

Maximum Candela = 170.65 Located At Horizontal Angle = 200, Vertical Angle = 50
1 - Vertical Plane Through Horizontal Angles (200 - 20) (Through Max. Cd.)
2 - Horizontal Cone Through Vertical Angle (50) (Through Max. Cd.)

13W Ceiling Vapor Proof LED Fixture

c UL us LISTED WET LOCATION

RoHS COMPLIANT

Item#	Description	Watts	Volts	CRI	CCT	Total Lumens*	Lumens / Watt	Width	Height	Ext.	Equivalent
65-079	LED VAPOR PROOF CEILING MOUNT SILVER FINISH	13	120~277	↑75	5000K	850	65	8"	11.3"	N/A	50-70W MET. HAL.

* Lumens measured at LED source

Pack: 6

15W LED Round Landscape Flood Fixture

Bronze Finish / Tempered Glass

With high performance LED packages, optics and long lasting drivers, these floods have changed the landscape lighting industry. They have a tough, die-cast aluminum body finished in Bronze UV stabilized powder coat and integral glare shield tempered glass. They are long lasting and CUL wet location listed. These are low maintenance, high efficiency floods perfect for any environment.

Features:

- UL listed
- Die-cast aluminum body
- UV stabilized powder coated finish
- Integral glare shield and tempered glass
- Suitable for wet locations
- Impact resistant tempered glass
- 5 Year warranty

Specifications:

- 15W
- 1,073 Lumens*
- 120~277V
- 5000K
- 75+ CRI
- 40° Beam angle
- 50-70W MH Equivalent
- Operating temperature: –40°C to 40°C
- 40,000 Hour life

Item no. **65-082**

Dimensions

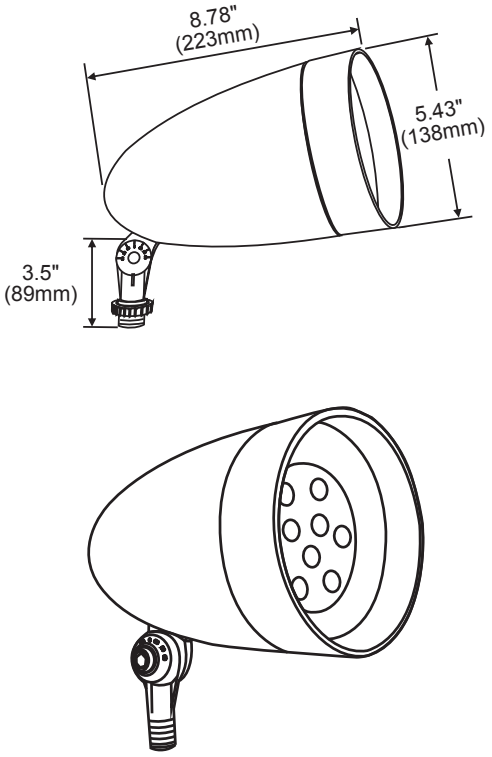

Photometrics

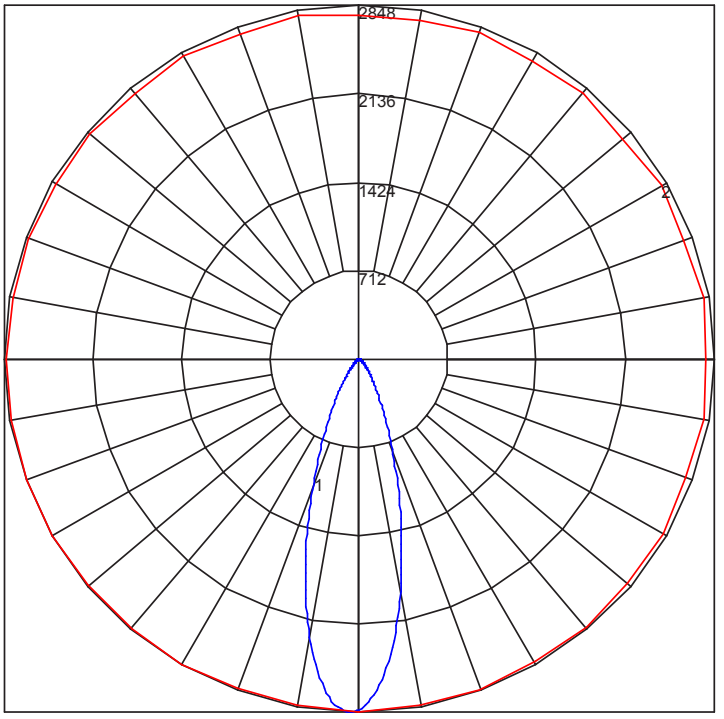

Maximum Candela = 2848.36 Located At Horizontal Angle = 270, Vertical Angle = 1.5
1 - Vertical Plane Through Horizontal Angles (270 - 90) (Through Max. Cd.)
2 - Horizontal Cone Through Vertical Angle (1.5) (Through Max. Cd.)

15W Round LED Landscape Flood

c UL us LISTED WET LOCATION

RoHS COMPLIANT

Item#	Description	Watts	Volts	CRI	CCT	Total Lumens*	Lumens / Watt	Width	Height	Ext.	Equivalent
65-082	LED ROUND LANDSCAPE FLOOD 15W BRONZE FINISH	15	120~277	↑75	5000K	1,073	72	5.43"	8"	8.78"	50-70W MET. HAL.

* Lumens measured at LED source

Pack: 6

11W LED Square Landscape Flood Fixture

Bronze Finish / Tempered Glass

This compact, powerful and rugged landscape LED flood will stand up to any environment. It has a UV stabilized Bronze powder coated finish, die cast aluminum body, integral glare shield and tempered glass. It's CUL wet location listed, and the perfect low-energy, low maintenance replacement for older landscape flood technologies.

Features:

- UL listed
- Die-cast aluminum body
- UV stabilized powder coated finish
- Integral glare shield and tempered glass
- Suitable for wet locations
- Impact resistant tempered glass
- 5 Year warranty

Specifications:

- 11W
- 767 Lumens*
- 120~277V
- 5000K
- 75+ CRI
- 40° Beam angle
- 50-70W MH Equivalent
- Operating temperature: –40°C to 40°C
- 40,000 Hour life

Item no. **65-083**

Dimensions

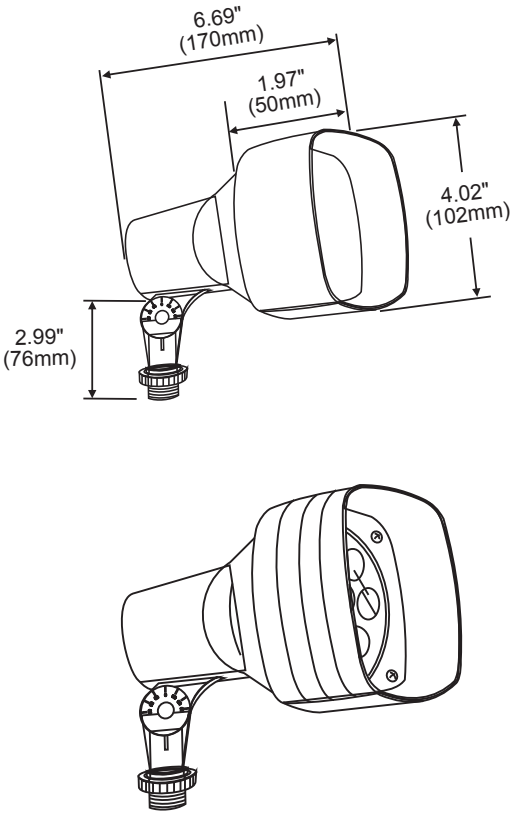

Photometrics

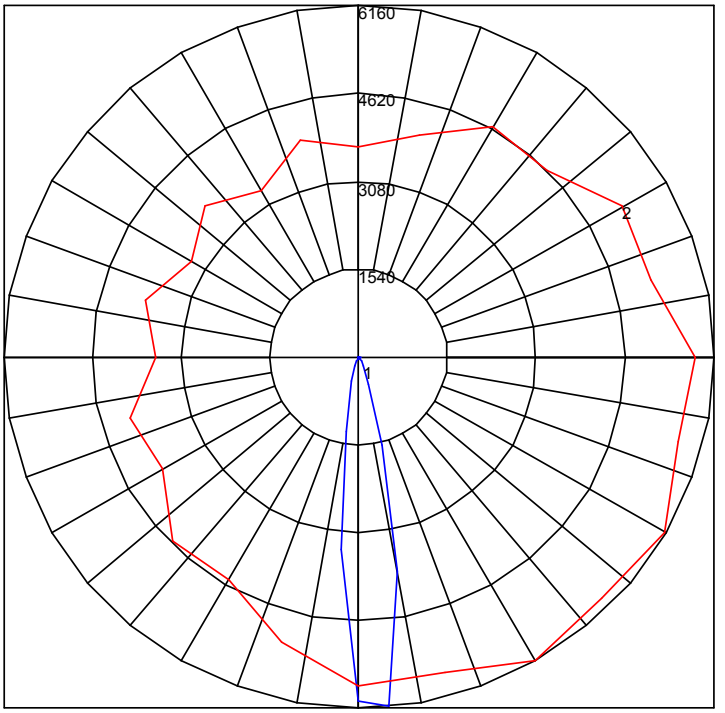

Maximum Candela = 6160.36 Located At Horizontal Angle = 300, Vertical Angle = 5
1 - Vertical Plane Through Horizontal Angles (300 - 120) (Through Max. Cd.)
2 - Horizontal Cone Through Vertical Angle (5) (Through Max. Cd.)

11W Square LED Landscape Flood

c UL us LISTED WET LOCATION

RoHS COMPLIANT

Item#	Description	Watts	Volts	CRI	CCT	Total Lumens*	Lumens / Watt	Width	Height	Ext.	Equivalent
65-083	LED SQUARE LANDSCAPE FLOOD 11W BRONZE FINISH	11	120~277	↑75	5000K	767	70	4.02"	6"	6.69"	50-70W MET. HAL.

* Lumens measured at LED source

Pack: 6

21" Mounting Arm for Carport/Parking Area Fixture

Anodized Aluminum

65-084 Anodized aluminum arm.
For use with items: **65-054** & **65-055**

Item no. **65-084**

Photo Control

65-085 Photo control – On at dusk / Off at dawn.
For use with items: **65-054** & **65-055**

Item no. **65-085**

Glass and Clamp Band for Hi-Bay Fixtures

65-086 For use with items: **65-080** & **65-081**

Item no. **65-086**

Die Cast Mounting Plates

Dark Bronze

76-665 1 Light – for use with landscape floods, items: **65-069, 65-070, 65-082 & 65-083**

76-666 2 Light – for use with landscape floods, items: **65-069, 65-070, 65-082 & 65-083**

Item no. **76-665**

Item no. **76-666**

PVC Mounting Post

Dark Bronze

Dimensions: Height: 18", Diameter: 3"

76-641 For use with landscape floods, items: **65-069, 65-070, 65-082 & 65-083**

Item no. **76-641**

Index / Notes

65-050 12
65-051 12
65-052 14
65-053 14
65-054 78
65-055 76
65-056 46
65-057 48
65-058 50
65-059 52
65-060 38
65-061 40
65-062 42
65-063 44
65-064 24
65-065 26
65-066 28
65-067 30
65-068 32
65-069 56
65-070 54
65-071 58
65-072 60
65-073 62
65-074 64
65-075 68
65-076 66
65-077 70
65-078 80
65-079 82
65-080 74
65-081 72
65-082 84
65-083 86
65-084 88
65-085 88
65-086 88
65-091 10
65-092 10
65-093 8
65-094 8
65-095 20
65-096 22
65-097 34
65-098 36
65-101 16
65-102 16
65-103 18
65-104 18
65-105 10
65-106 10
65-107 8
65-108 8
76-641 89
76-665 89
76-666 89

Notes

www.nuvolighting.com
Catalog NU1048

National Toll-Free: **1.800.43.SATCO** (1.800.437.2826) www.satco.com

Corporate Offices & Distribution Center: **NEW YORK** 110 Heartland Blvd., Brentwood, NY 11717 800.437.2826 631.243.2022 Fax 631.243.2027

Distribution Centers: **FLORIDA** 900 N.W. 159th Drive, Miami, FL 33169 800.437.2826 305.624.2044 FAX 305.623.0286
CALIFORNIA 31288 San Benito St. Hayward, CA 94544 800.437.2826 510.487.4822 FAX 510.487.8955
WASHINGTON 4710 116th St. S.W., Mukilteo, WA 98275 800.437.2826 425.789.3300 FAX 425.789.3310
TEXAS 2000 Valwood Parkway, Farmers Branch, TX 75234 800.437.2826 972.247.2437 FAX 972.247.5408
PUERTO RICO Campeche St. 23, Julio N. Matos Industrial Park, Carolina, PR 00984 787.757.3510 FAX 787.757.3540

Like us!

Follow us!

© Copyright 2016, SATCO Products, Inc

SATCO® | NUVO® LIGHTING

FREEDOM™ ARCHITECTURAL LED DOWNLIGHTS & RETROFITS

Freedom architectural recessed LEDs allow for multiple beam angles and color temperatures in one room using matching trims.

One LED retrofit. Hundreds of options.

Freedom of design, LED efficiency. Great value.

Lighting projects have a way of coming with many variables. Ceiling heights, room size and purpose, and code requirements all make for a challenging lighting plan. Satco Freedom recessed LED fixtures help make the process easier by providing many options—hundreds to be exact—from just one basic retrofit.

Multiple beam angles, fixture sizes, Lumens, color temperatures and trims give you the Freedom to create the look you want and the performance you need. You can create multiple solutions for new installs or renovations using one family of components, custom designed by you, to meet most any project requirement.

LED: Freedom from high energy costs

Freedom LED fixtures deliver energy savings so important to any project, whether it's new construction or old work. Freedom LED retrofits save up to 85% over older technologies, burn cool, and enjoy a long life of up to 50,000 hours. That all translates to lower utility bills and far less maintenance. And all Freedom LED fixtures are dimmable and deliver up to 90 CRI.

Freedom is a great value for everyone

Freedom LED retrofits make it easy to create custom solutions at a very reasonable cost and installation is as simple as installing a light bulb. Dozens of fixture choices, ease of installation and lower energy and maintenance costs make Freedom a great value for both installers and end users alike.

Freedom architectural recessed LEDs allow for multiple beam angles and color temperatures in one room using matching trims.

Freedom sets the mood

In addition to the 4 available color temperatures, Freedom fixtures can also be designed with warm-dimming LEDs. Once the sole realm of the incandescent lamp, warm lighting can be easily recreated with the Freedom warm dimming LED housing. Unlike other LED lighting which dims to a gray light, our Dimension warm dimming modules dim from 2700K to a very warm 2200K just like older incandescent lamps. Homes and venues of all sorts can achieve this inviting atmosphere and not have to give up the energy savings LEDs offer.

- 4 Color temperatures and warm dimming option
- 4 Beam angles
- 4" and 5/6" retrofit sizes
- 4" and 5" universal cans
- Dimmable*
- Up to CRI >90**
- 5 year warranty†
- Long life—50,000 hours

* Consult Satco or visit www.satco.com for an up to date dimmer compatibility list.
** 5000K >80CRI
† See separate warranty for complete terms and conditions.

ENERGY STAR

Intertek
Damp Location

Achieve different lighting effects at retail while maintaining a cohesive, custom look.

Higher lumens, exactly where they're needed.

Freedom 4", high lumen LED housings were specifically designed with higher ceilings in mind. The impressive architecture of higher ceiling does not mean settling for less light or having to add additional fixtures. They deliver more lumens over the chosen beam angle at retail, in hospitality settings, offices and in homes of all types; wherever higher ceilings make adequate lighting a bit more challenging.

Standard round and square trims are available for the high lumen housing, as well as Freedom gimbal trims which aim lighting wherever it's needed most. Create more impact by highlighting specific items or areas and provide additional safety.

High lumen LED housings and gimbal trim can make lighting even the most challenging spaces easy.

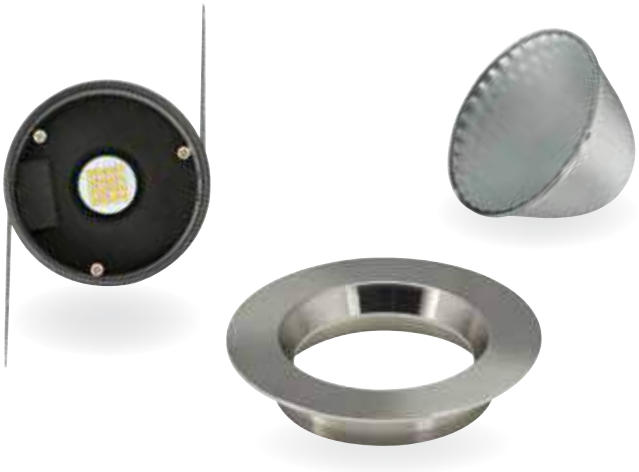

Creating custom LED retrofits is as easy as 1, 2, 3.

It takes just 3 steps to solve dozens of lighting challenges. Start by choosing the housing size. This also contains your color temperature, including warm-dimming. Then choose the beam angle you need for the item or area you're lighting. Finally, choose the trim ring. That's it. You're on the way to creating a consistent, functional lighting plan that covers almost every lighting need.

3 Easy steps to customize your Freedom downlight/retrofit.

1

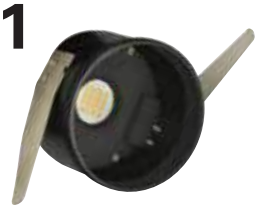

Select color temperature

Start with the housing size and color temperature

- 4"
- 5"/6"

- 2700K
- 3000K
- 4000K
- 5000K
- 2700K-2200K Warm Dimming

2

Select beam angle

Add the beam angle and optics

4"	5/6"
• 30°	• 35°
• 40°	• 45°
• 60°	• 60°
• 95°	• 95°

3

Select trim

Choose your trim finish and shape, round or square

- White
- Brushed Nickel
- Polished Nickel
- Bronze

LED-ready recessed housings mean even more Freedom

Just four recessed can assemblies cover most any installation. These shallow air-tight 4" and 5" universal LED can assemblies are designed for spaces where depth is limited.

- Two designs – perfect for new construction or remodeling work
- Available in 4" and 5" sizes
- LED-ready connector
- Shallow housing – perfect for hard to fit locations
- Push-in wire connectors supplied
- Two bar hangers are included and adjustable to 25". Bar hangers are parallel to junction box, but can be positioned 90° perpendicular to junction box if desired.
- Rugged design and finish
- IC Rated
- Air-tight rated

For 4" remodeling projects, choose model **S9539**

For 5" new construction, choose model **S9541**

For 4" new construction, choose model **S9538**

For 5" new construction, choose model **S9540**

Freedom air-tight new construction or remodeling housings are perfectly designed for Freedom LED architectural downlights and retrofits.

Freedom recessed housings supplied with LED quick connector.

Retrofit installation is easy!

Disconnect the screw-in base from the Freedom housing at the quick connector and screw the base end into the recessed can's socket.

Plug the base back into the quick connector on the Freedom housing.

Rotate to the right and push up into ceiling can.

Recessed housing assemblies

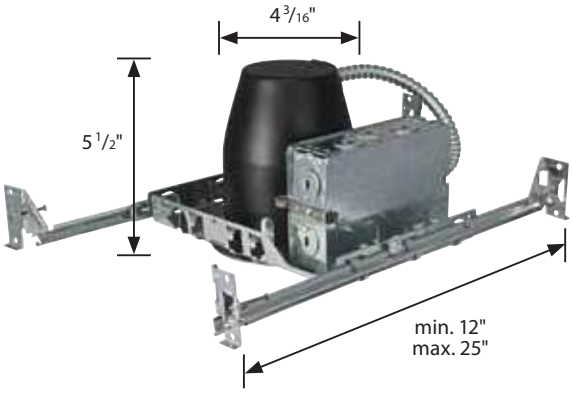

S9538 4" Housing – New Construction
- For 120V, 60Hz, 18W max.
- Suitable for wet and damp locations*
- For use only with UL or cUL classified LED or equivalent

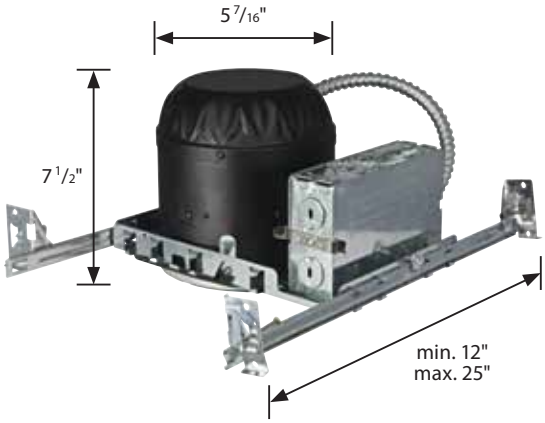

S9540 5/6" Housing – New Construction
- For 120V, 60Hz, 24W max.
- Suitable for wet and damp locations*
- For use only with UL or cUL classified LED or equivalent

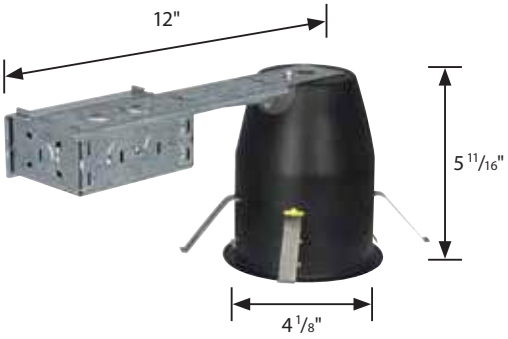

S9539 4" Housing – Remodel
- For 120V, 60Hz, 18W max.
- Suitable for wet and damp locations*
- For use only with UL or cUL classified LED or equivalent

S9541 5/6" Housing – Remodel
- For 120V, 60Hz, 24W max.
- Suitable for wet and damp locations*
- For use only with UL or cUL classified LED or equivalent

*LED retrofit trim must be equally rated.

4" LED housings and reflectors

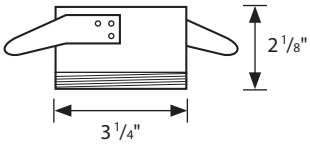

S9500 4" LED Housing – 10W, 2700K, 90CRI

Reflector Numbers	Reflector Angle	ENERGY STAR Numbers	Brightness (lumens)
S9508	30 deg	S9500-30	540
S9509	40 deg	S9500-40	540
S9510	60 deg	S9500-60	540
S9511	95 deg	S9500-95	500

S9501 4" LED Housing – 10W, 3000K, 90CRI

Reflector Numbers	Reflector Angle	ENERGY STAR Numbers	Brightness (lumens)
S9508	30 deg	S9501-30	550
S9509	40 deg	S9501-40	550
S9510	60 deg	S9501-60	550
S9511	95 deg	S9501-95	500

S9502 4" LED Housing – 10W, 4000K, 90CRI

Reflector Numbers	Reflector Angle	ENERGY STAR Numbers	Brightness (lumens)
S9508	30 deg	S9502-30	600
S9509	40 deg	S9502-40	600
S9510	60 deg	S9502-60	600
S9511	95 deg	S9502-95	550

S9503 4" LED Housing – 10W, 5000K, 80CRI

Reflector Numbers	Reflector Angle	ENERGY STAR Numbers	Brightness (lumens)
S9508	30 deg	S9503-30	700
S9509	40 deg	S9503-40	700
S9510	60 deg	S9503-60	700
S9511	95 deg	S9503-95	650

S9524 4" LED Housing – 10W, 2700K-2200K, 83CRI

Reflector Numbers	Reflector Angle	ENERGY STAR Numbers†	Brightness @ 2700K (lumens)†
S9508	30 deg	S9524-30	540
S9509	40 deg	S9524-40	540
S9510	60 deg	S9524-60	540
S9511	95 deg	S9524-95	500

†ENERGY STAR rating relates to 2700K CCT setting only

S9508 4" Reflector – 30° Beam angle

Beam angle

30°

Beam Profile

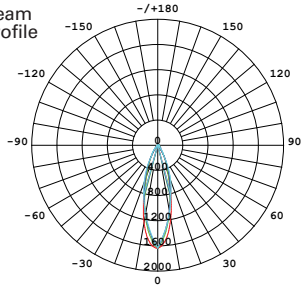

S9509 4" Reflector – 40° Beam angle

Beam angle

40°

Beam Profile

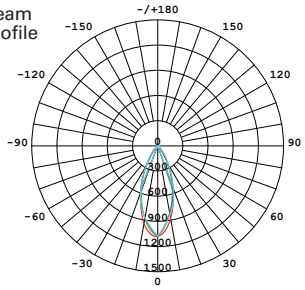

S9510 4" Reflector – 60° Beam angle

Beam angle

60°

Beam Profile

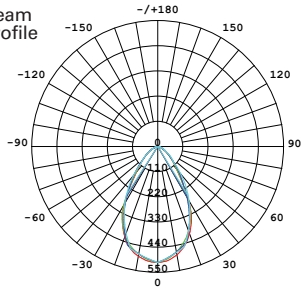

S9511 4" Reflector – 95° Beam angle

Beam angle

95°

Beam Profile

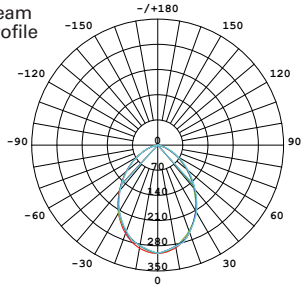

5"/6" LED housings and reflectors

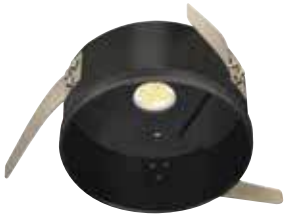

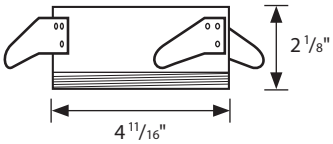

S9504 5/6" LED Housing – 13.5W, 2700K, 90CRI

Reflector Numbers	Reflector Angle	ENERGY STAR Numbers	Brightness (lumens)
S9512	35 deg	S9504-35	830
S9513	45 deg	S9504-45	830
S9514	60 deg	S9504-60	830
S9515	95 deg	S9504-95	760

S9505 5/6" LED Housing – 13.5W, 3000K, 90CRI

Reflector Numbers	Reflector Angle	ENERGY STAR Numbers	Brightness (lumens)
S9512	35 deg	S9505-35	860
S9513	45 deg	S9505-45	860
S9514	60 deg	S9505-60	860
S9515	95 deg	S9505-95	800

S9506 5/6" LED Housing – 13.5W, 4000K, 90CRI

Reflector Numbers	Reflector Angle	ENERGY STAR Numbers	Brightness (lumens)
S9512	35 deg	S9506-35	900
S9513	45 deg	S9506-45	900
S9514	60 deg	S9506-60	900
S9515	95 deg	S9506-95	860

S9507 5/6" LED Housing – 13.5W, 5000K, 80CRI

Reflector Numbers	Reflector Angle	ENERGY STAR Numbers	Brightness (lumens)
S9512	35 deg	S9507-35	1000
S9513	45 deg	S9507-45	1000
S9514	60 deg	S9507-60	1000
S9515	95 deg	S9507-95	960

S9525 5/6" LED Housing – 13.5W, 2200K-2700K, 83CRI

Reflector Numbers	Reflector Angle	ENERGY STAR Numbers†	Brightness @ 2700K (lumens)†
S9512	35 deg	S9525-35	830
S9513	45 deg	S9525-45	830
S9514	60 deg	S9525-60	830
S9515	95 deg	S9525-95	760

†ENERGY STAR rating relates to 2700K CCT setting only

S9512 5"/6" Reflector – 35° Beam angle

Beam angle

35°

Beam Profile

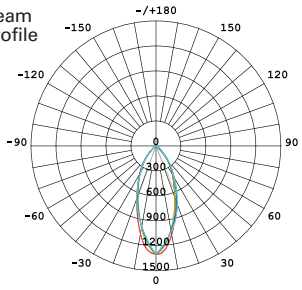

S9513 5"/6" Reflector – 45° Beam angle

Beam angle

45°

Beam Profile

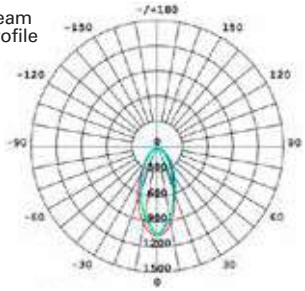

S9514 5"/6" Reflector – 60° Beam angle

Beam angle

60°

Beam Profile

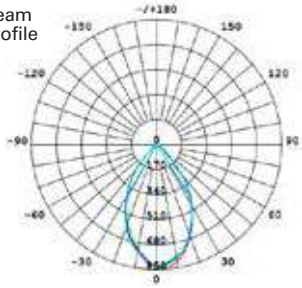

S9515 5"/6" Reflector – 95° Beam angle

Beam angle

95°

Beam Profile

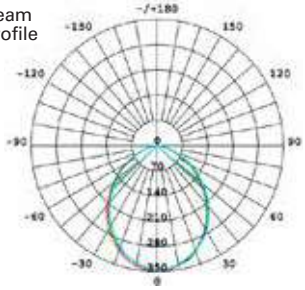

4" Trims

Round

White
S9516 4"

Brushed Nickel
S9517 4"

Bronze
S9518 4"

Polished Nickel
S9519 4"

4" Round

For use in 4" new work and remodel housings.

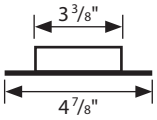

Square

White
S9526 4"

Brushed Nickel
S9527 4"

Bronze
S9528 4"

Polished Nickel
S9529 4"

4" Square

For use in 4" new work and remodel housings.

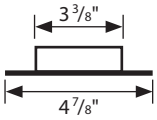

5/6" Trims

Round

White
S9520 5"
S9554 6"

Brushed Nickel
S9521 5"
S9555 6"

Bronze
S9522 5"
S9556 6"

Polished Nickel
S9523 5"
S9557 6"

5" Round

For use in 5" new work and remodel housings or 6" new work housings.

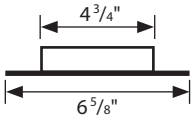

6" Round

For use in 6" new work and remodel housings.

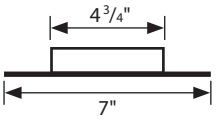

Square

White
S9530 5"
S9534 6"

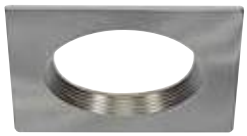

Brushed Nickel
S9531 5"
S9535 6"

Bronze
S9532 5"
S9536 6"

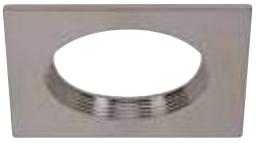

Polished Nickel
S9533 5"
S9537 6"

5" Square

For use in 5" new work and remodel housings or 6" new work housings.

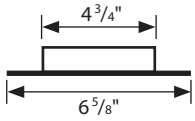

6" Square

For use in 6" new work and remodel housings.

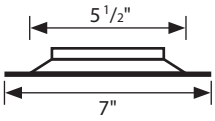

4" High Lumen LED housings and reflectors

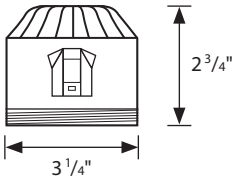

S9785 4" LED Housing – 16W, 2700K, 90CRI

Reflector Numbers	Reflector Angle	ENERGY STAR Numbers	Brightness (lumens)
S9508	30 deg	S9785-30	930
S9509	40 deg	S9785-40	930
S9510	60 deg	S9785-60	930
S9511	95 deg	S9785-95	880

S9786 4" LED Housing – 16W, 3000K, 90CRI

Reflector Numbers	Reflector Angle	ENERGY STAR Numbers	Brightness (lumens)
S9508	30 deg	S9786-30	940
S9509	40 deg	S9786-40	940
S9510	60 deg	S9786-60	940
S9511	95 deg	S9786-95	890

S9787 4" LED Housing – 16W, 4000K, 90CRI

Reflector Numbers	Reflector Angle	ENERGY STAR Numbers	Brightness (lumens)
S9508	30 deg	S9787-30	950
S9509	40 deg	S9787-40	950
S9510	60 deg	S9787-60	950
S9511	95 deg	S9787-95	900

S9788 4" LED Housing – 16W, 5000K, 80CRI

Reflector Numbers	Reflector Angle	ENERGY STAR Numbers	Brightness (lumens)
S9508	30 deg	S9788-30	1050
S9509	40 deg	S9788-40	1050
S9510	60 deg	S9788-60	1050
S9511	95 deg	S9788-95	1000

S9789 4" LED Housing – 16W, 2700K-2200K, 80CRI

Reflector Numbers	Reflector Angle	ENERGY STAR Numbers†	Brightness @ 2700K (lumens)†
S9508	30 deg	S9789-30	940
S9509	40 deg	S9789-40	940
S9510	60 deg	S9789-60	940
S9511	95 deg	S9789-95	890

†ENERGY STAR rating relates to 2700K CCT setting only

S9508 4" Reflector – 30° Beam angle

Beam angle

Beam Profile

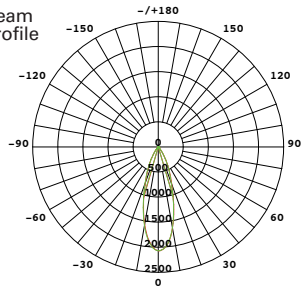

S9509 4" Reflector – 40° Beam angle

Beam angle

Beam Profile

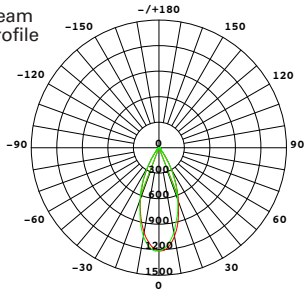

S9510 4" Reflector – 60° Beam angle

Beam angle

Beam Profile

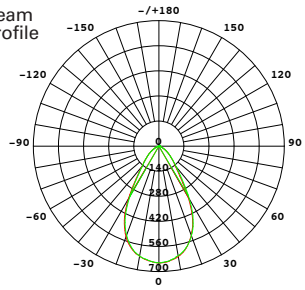

S9511 4" Reflector – 95° Beam angle

Beam angle

Beam Profile

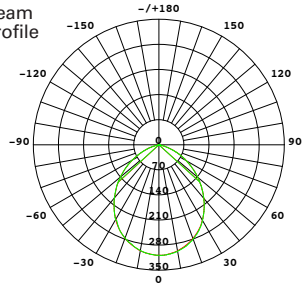

4" High lumen trims

Round

White
S9516 4"

4" Round
For use in 4" new work and remodel housings.

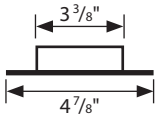

Brushed Nickel
S9517 4"

Bronze
S9518 4"

Polished Nickel
S9519 4"

Square

White
S9526 4"

4" Square
For use in 4" new work and remodel housings.

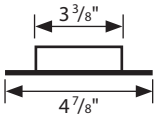

Brushed Nickel
S9527 4"

Bronze
S9528 4"

Polished Nickel
S9529 4"

Round Gimbal

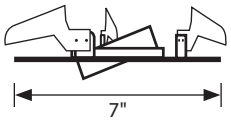

6" Round Gimbal
For use in 6" new work and remodel housings.

White
S9646 6"

Brushed Nickel
S9647 6"

Bronze
S9648 6"

Polished Nickel
S9649 6"

Square Gimbal

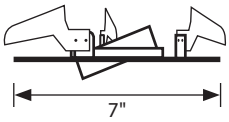

6" Square Gimbal
For use in 6" new work and remodel housings.

White
S9693 6"

Brushed Nickel
S9694 6"

Bronze
S9695 6"

Polished Nickel
S9696 6"

Copyright © 2016
Satco Products, Inc.
All Rights Reserved.
12/16 SA1710

National Toll-Free:
800-43-SATCO
(800-437-2826)
www.satco.com

Distribution Centers:
New York, Florida,
Texas, Washington,
California, Puerto Rico

Satco Products Inc.
110 Heartland Blvd.,
Brentwood, NY 11717
PH 631-243-2022
FX 631-243-2027