legrand®

Wiremold

Evolution™ Series
6" Poke-Thru Devices
INSTALLATION INSTRUCTIONS

Installation Instruction No.: 1 007 154 R2 – Updated May 2010

Wiremold electrical systems conform to and should be properly grounded in compliance with requirements of the current National Electrical Code or codes administered by local authorities.

All electrical products may present a possible shock or fire hazard if improperly installed or used. Wiremold electrical products may bear the mark as UL Listed and/or Classified and should be installed in conformance with current local and/or the National Electrical Code.

IMPORTANT: Please read all instructions before beginning.

Products Covered: 6ATCP, 6ATP, 6ATCPAV, 6ATPAV, 6ATC, 6AT, 6STC, 6CTC, 6CT, 68REC, 68MAAP, 682A, 68B, 6DP, 6DEC, 6S1, 6S2, 6MAAP, 6AAP, 6MAAP2A, 6B, 6TS, 6STCP, 6STCPAV, 575CHA, 5PTHA, 5BLH, 175CHA, 1125CHA, 1PTHA, 1BLH, CE6STCP, CE6STCPAV

CAUTION: DO NOT operate tile stripper, cleaning, or resurfacing equipment over top of covers. This may result in damage to the surface finish of the product.

Suitable for use in air handling spaces in accordance with Sec. 300-22 (C) of the National Electrical Code.

FLOOR PREPARATIONS

Step 1 Layout and locate position of hole(s).

CAUTION: Minimum spacing of 2ft on center and not more than one device per each 65 square feet of floor area in each span.

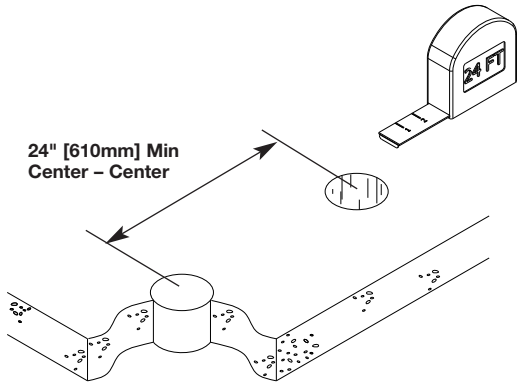

CAUTION: Be certain to locate hole at least 6" [152mm] from any wall or pillar to leave enough room for Poke-Thru cover assembly.

Step 2 Remove 6 1/2" dia. [166mm] section from carpet or tile. Use template provided.

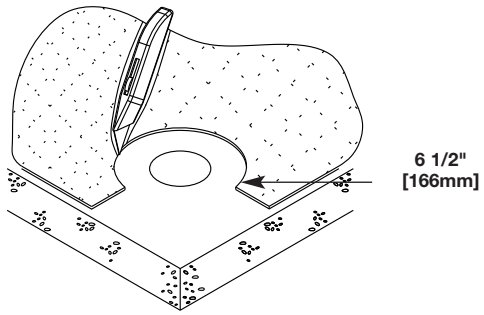

Step 3 Create core hole according to the dimensions provided in the chart.

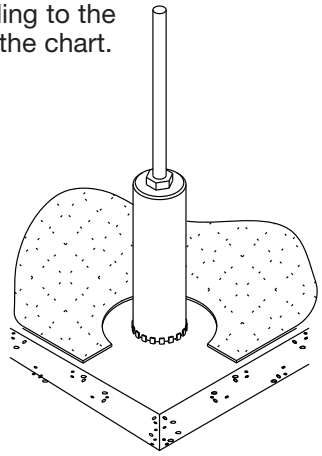

FLOOR TYPE	CORE SIZE (Min.)	CORE SIZE (Max.)
Covered Floors (Carpet, Tile or Wood)	6" [152mm]	6 1/8" [156mm]
Bare Concrete or Terrazzo	6 1/16" [154mm]	6 1/8" [156mm]

INSTALLING COMPLETE ASSEMBLY

Step 1 Attach data and AV plates and wire power and data devices (Can be completed above floor). Refer to wiring schematic below for power wiring options.

Catalog Nos. 6ATCP, 6ATP

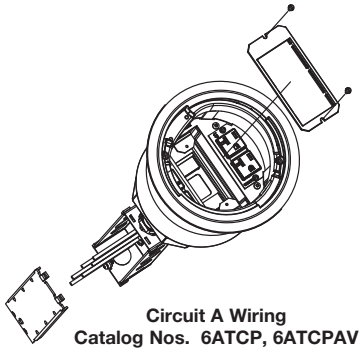

Circuit A Wiring
Catalog Nos. 6ATCP, 6ATCPAV

Catalog Nos. 6ATCPAV, 6ATPAV

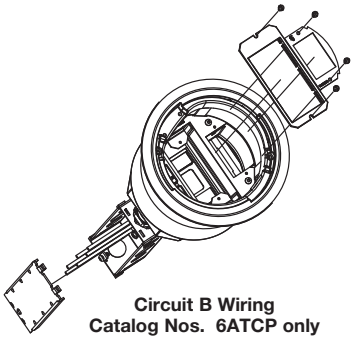

Circuit B Wiring
Catalog Nos. 6ATCP only

CONVENTIONAL WIRING SCHEMATIC		ISOLATED GROUND WIRING SCHEMATIC	
BLACK or HOT From branch circuit	**BLACK** from Poke-Thru receptacle	**BLACK or HOT** From branch circuit	**BLACK** from Poke-Thru receptacle
WHITE or NEUTRAL From branch circuit	**WHITE** from Poke-Thru receptacle	**WHITE or NEUTRAL** From branch circuit	**WHITE** from Poke-Thru receptacle
GREEN or GROUND From branch circuit ***System Ground***	**GREEN** from Poke-Thru receptacle	**ISOLATED GROUND** From branch circuit	**GREEN** from Poke-Thru receptacle
GREEN (jumper wire) from Poke-Thru junction box		**GREEN or GROUND** From branch circuit ***System Ground***	**GREEN** (jumper wire) from Poke-Thru junction box

CONVENTIONAL WIRING SCHEMATIC		ISOLATED GROUND WIRING SCHEMATIC	
BLACK or HOT From branch circuit	**RED** from Poke-Thru receptacle	**BLACK or HOT** From branch circuit	**RED** from Poke-Thru receptacle
WHITE or NEUTRAL From branch circuit	**WHITE W/ BLUE STRIPE** from Poke-Thru receptacle	**WHITE or NEUTRAL** From branch circuit	**WHITE W/ BLUE STRIPE** from Poke-Thru receptacle
GREEN or GROUND From branch circuit ***System Ground***	**GREEN W/ YELLOW STRIPE** from Poke-Thru receptacle	**ISOLATED GROUND** From branch circuit	**GREEN W/ YELLOW STRIPE** from Poke-Thru receptacle
GREEN (jumper wire) from Poke-Thru junction box		**GREEN or GROUND** From branch circuit ***System Ground***	**GREEN** (jumper wire) from Poke-Thru junction box

WARNING: Ground wire from junction box must be connected to system ground.
CAUTION: Receptacle mounting means not grounded. Grounding wire connection required. For isolated ground wiring, connect ground leads to a separate isolated grounding conductor. See NEC 250-146(d).

If necessary remove Feed Plates to pull communications wires through Poke-Thru device. Replace Feed Plates when finished pulling wires.

Catalog Nos. 6ATCP, 6ATP

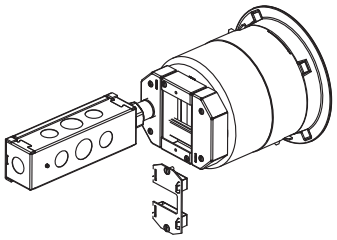

Catalog Nos. 6ATCPAV, 6ATPAV

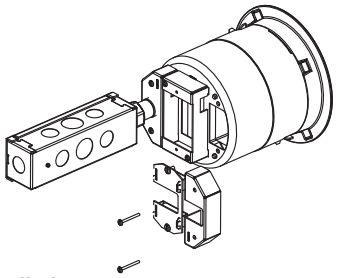

CAUTION: To maintain fire classification, Feed Plates must be installed.

Step 2 If circuit is connected to an isolated ground, apply IG icon on receptacle plate as shown.

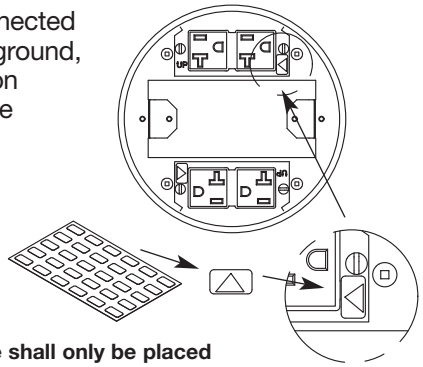

NOTE: The orange triangle shall only be placed on devices that are wired for isolated ground. See NEC 250-146(d).

For Carpet or surface mounted tile

Step 3 Place appropriate gasket around poke thru and slide under flange. Use flat foam gasket for surface tile applications or use round neoprene gasket for carpet applications. For the flush tile applications no gasket is needed.

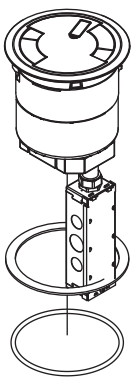

Step 4 Push Poke-Thru into floor.

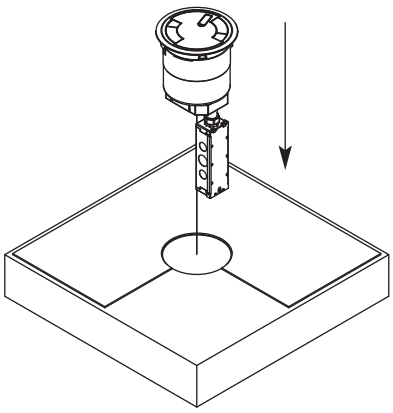

Step 5 Installation complete.

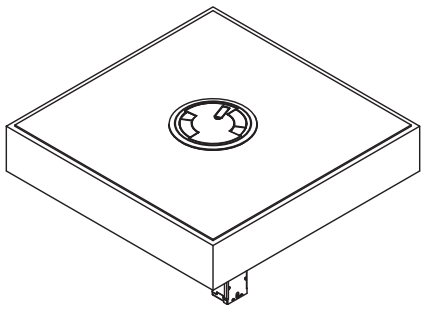

For Flush Tile Installation (Start with Steps 1 & 2 on previous page.)

Step 3 Place shims around bottom of flange to match thickness of tile. Flange is 1/8" thick. (2) 1/8" shims and (2) 1/16" shims are provided. Push Poke-Thru into floor.

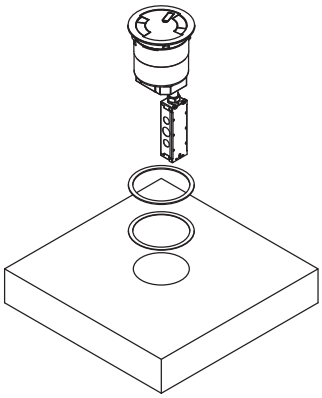

NOTE: If more shims are required, use Cat. No 6TS.

Step 4 Use grout and/or silicone caulk between edges of flange and tile.

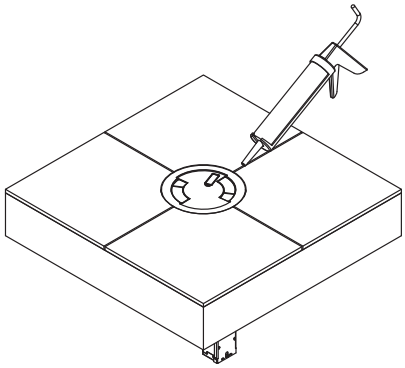

INSTALLING STEM ASSEMBLY AND SEPARATE COVER

Step 1 Insert Stem Assembly into core hole.

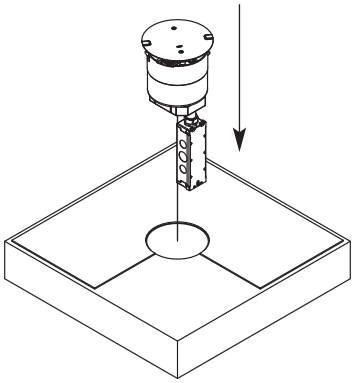

Step 2 Remove disposable plate and (2) plate clips by removing the 8-32 screws. Install Flange using the (2) 8-32 x 1/2" Cap Head screws provided with the cover assembly.

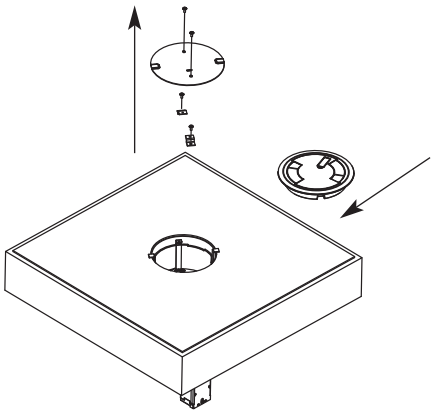

INSTALLING DEVICE PLATES

Half Gang Plates

Step 1 Install plates using (2) 6-32 x 1/2" screws. (provided)

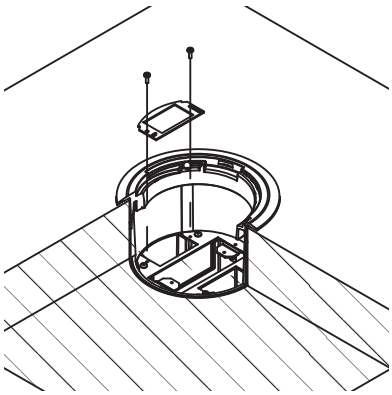

NEMA 1 Gang Device

Step 1 Screw receptacle into tabs using (2) 6-32 screws provided with the receptacle.

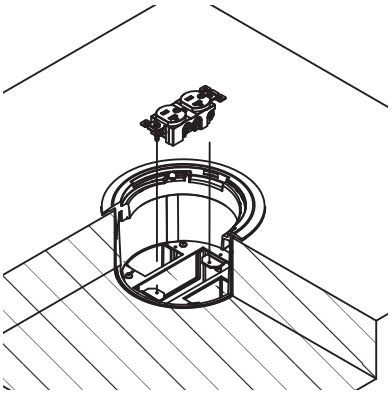

Step 2 Install plates using (2) 6-32 x 1/2" screws. (provided)

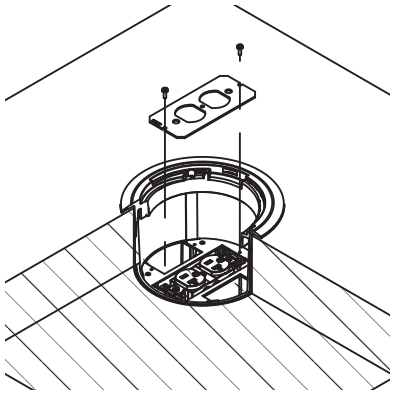

1.5 Gang Data/AV Plates

Step 1 Use pliers to bend device tabs along score lines. Bend in both directions repeatedly until tab breaks off.

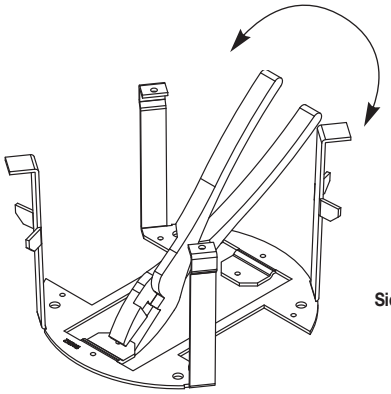

Side walls removed for clarity

Step 2 Install device plate using (2) 6-32 x 1/2" screws. (provided)

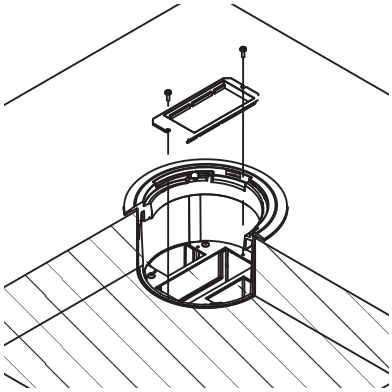

CONFIGURING FEED PLATES

Step 1 Remove cover assembly from Poke Thru by removing (2) 8-32 screws and lifting cover off.

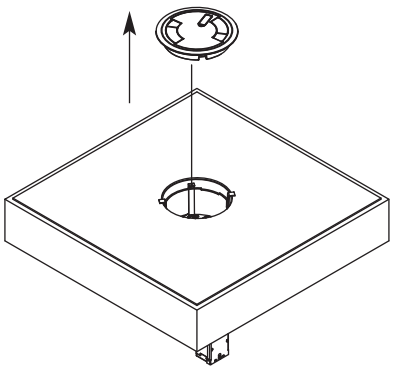

Step 2 Remove Poke Thru from floor by bending tabs inward and pulling unit up.

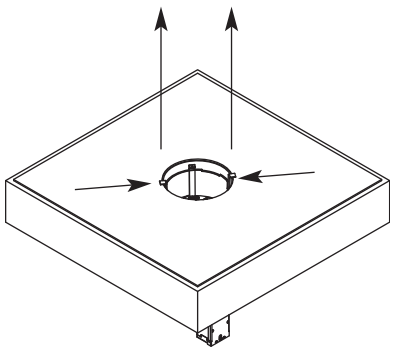

Step 3 Remove (2) 8-32 screws and pull off Feed Plate or housing.

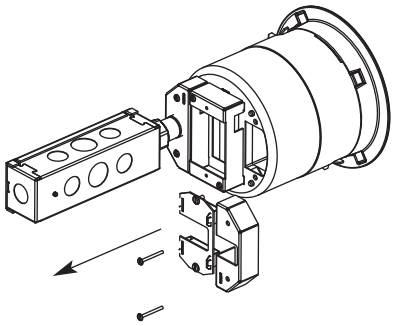

CAUTION: To maintain fire classification, Feed Plates must be installed.

Step 4 Use (2) 8-32 screws to install new Feed Plate or housing

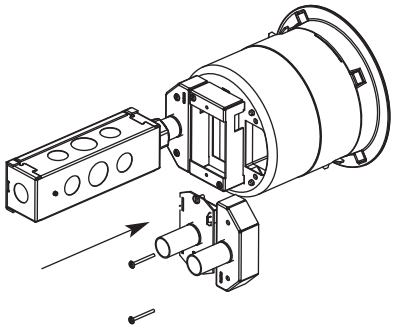

CAUTION: To maintain fire classification, Feed Plates must be installed.

WIRE TUNNEL REMOVAL

Step 1 Remove Feed Housing from center and side without J-box.

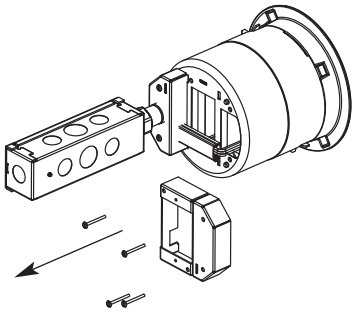

Step 2 Pull wires out of wire tunnel.

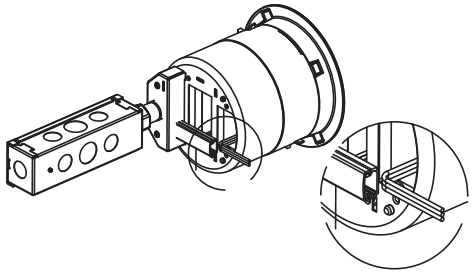

Step 3 Slide wire tunnel out of remaining Feed Housing.

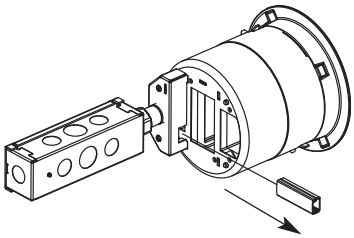

Step 4 Rotate center housing and reattach with (2) 8-32 screws.

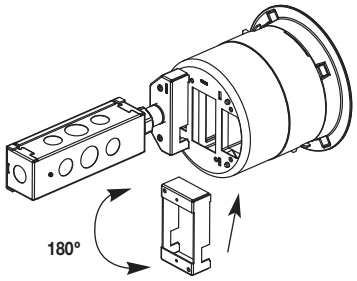

Step 5 Reattach side Feed Housing and feed plate with (4) 8-32 screws.

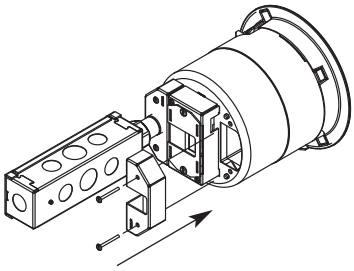

CAUTION: To maintain fire classification, Feed Plates must be installed.

INSTALLING DEVICES IN DEVICE PLATES

6TRAC, 6SER, 6ACT8A
(Devices not included)

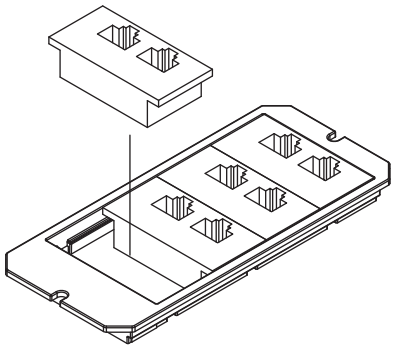

6MAAP, 6AAP, 6MAAP2A, 68MAAP
(Devices not included)

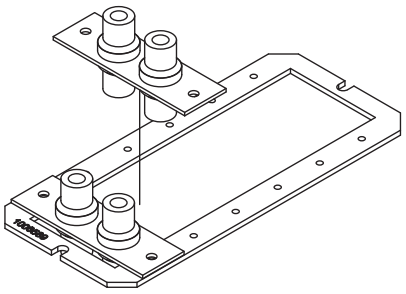

682A, 6MAAP2A
(Includes 2A bezels. Devices not included)

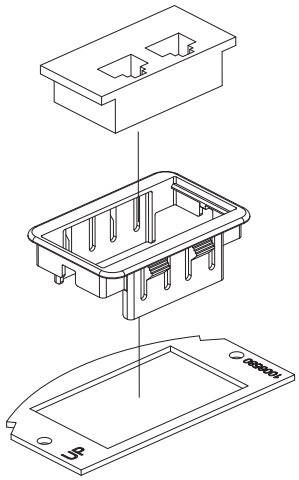

Evolution Series Poke-Thru Devices are UL Listed and Classified to U.S. and Canadian safety standards to the following conditions:

The 6STC Poke-Thru Stem with the 6CTC or 6CT Service Head Fitting, and the 6ATCP, 6ATP, 6ATCPAV 6ATPAV, 6ATC or 6AT factory assembled Poke-Thru devices are for use with 1-, 1 1/2 -, or 2- hour rated unprotected reinforced concrete floors and 1-, 1 1/2 -, or 2- hour rated floors employing unprotected steel floor units and concrete topping (D900 Series Designs), or concrete floors with suspended ceilings. (Fire resistive designs with suspended ceilings should have provisions for accessibility in the ceiling area below the Poke-Thru fittings).

The assembled Poke-Thru stem and service fitting will not reduce the ratings of the floor assembly when the thickness and type of concrete (required for the specific rating) are within the specified limits and the fittings are installed as specified:

1. **Spacing** – Minimum of 2' [610mm] OC and not more than one unit per 65 sq. ft. [6 sq. m] of floor area in each span.
2. **Concrete** – Minimum thickness of structural concrete topping of 2 1/4" [57mm] over metal deck or a minimum 3" [76mm] thick reinforced concrete slab. Unit weight of concrete to be 110 to 155 pcf.
3. **Installation** – Mounted in a 6" [152mm] diameter hole in concrete per installation instructions accompanying the fittings. For use with power circuits, data and/or audio/visual cables as tabulated below:

COPPER CROSS-SECTION

	OUTER CHANNELS	CENTER CHANNEL
Max Copper X-Section	.0154 sq. in. [9.9mm^2]	.0387 sq. in. [24.97mm^2]
Max # Conductors	(3) 12 AWG	(12) 14 AWG

NOTE: When using conductor sizes other than listed above, the aggregate cross-sectional area of the copper conductors shall not exceed the cross-sectional areas listed.

The “TC” suffix letters indicate that the device may be installed on tile or carpet covered concrete floors. The “T” suffix letter indicates that the device is intended to be installed on a concrete floor, embedded into the tile covering.

Copper Cross Sectional Area of Commonly Used Conductors	
Size	**Solid**
#24	.00032 sq. in. [.20645mm^2]
#22	.00050 sq. in. [.32258mm^2]
#14	.00323 sq. in. [2.08386mm^2]
#12	.00512 sq. in. [3.30321mm^2]
#10	.00815 sq. in. [5.25805mm^2]
#8	.01296 sq. in. [8.36127mm^2]

NOTE: Use above values for solid or stranded conductors.

CAUTION: Receptacle supplied with this Poke-Thru is not suitable for direct field wiring. Contact manufacturer for replacement. Field modifications will void UL Listing and Classification. Replacement receptacle is limited to this manufacturers' Catalog No 68REC.

Carpet Cutout Template

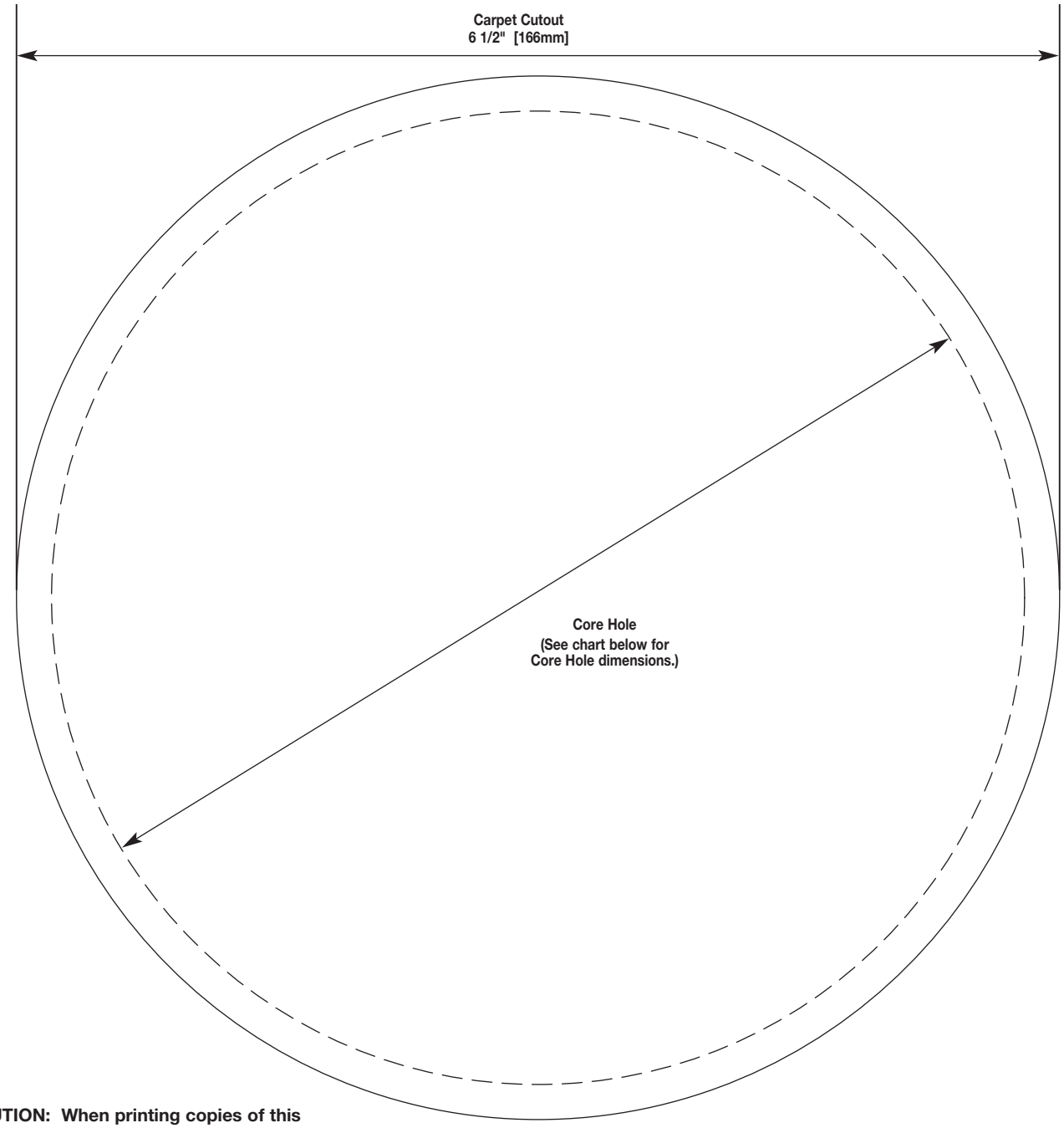

CAUTION: When printing copies of this template please be sure template is scaled correctly and is the correct size once it is printed.

FLOOR TYPE	CORE SIZE (Min.)	CORE SIZE (Max.)
Covered Floors (Carpet, Tile or Wood)	6" [152mm]	6 1/8" [156mm]
Bare Concrete or Terrazzo	6 1/16" [154mm]	6 1/8" [156mm]

WIREMOLD
U.S. and International:
60 Woodlawn Street • West Hartford, CT 06110
1-800-621-0049 • FAX 860-232-2062 • Outside U.S.: 860-233-6251
Canada:
570 Applewood Crescent • Vaughan, Ontario L4K 4B4
1-800-723-5175 • FAX 905-738-9721

© Copyright 2010 Legrand/Wiremold All Rights Reserved

1 007 154 R2 0510