Class 3400 Meter

ADVANCED KWH/DEMAND METER WITH COMMUNICATIONS

INSTALLATION INSTRUCTIONS

E-Mon
850 Town Center Drive
Langhorne, PA 19047
(800) 334-3666
www.emon.com
info@emon.com

62-0391-01

Dear Valued Customer,

We are pleased that you chose to buy one of our products, and want you to be just as pleased with owning it. Before installing your new E-Mon product, please read the information on the following pages carefully.

We believe that you will find the E-Mon D-Mon meters easy to install and to use for monitoring and evaluating your electrical usage.

To be sure that you are 100% satisfied with your products, we provide toll-free technical and sales support Monday through Friday, 8:00 am to 7:30 pm, EST: (800) 334-3666. You may also reach us via email at info@emon.com.

If you have questions, we can handle them quickly and effectively with a telephone call. Please let us try to help you BEFORE you remove your meter. And to help us help you, we ask that you have all relevant information on hand when you call (model or part numbers, nature of difficulty, etc.)

Be sure to forward this manual to the owner after installation is complete, so that they may use it as a reference guide when reading the E-Mon D-Mon meter.

Thank you.

TABLE OF CONTENTS

Section 1.0	Introduction	4
Section 2.0	Internal Electronic Assemblies	5
Section 2.1	Main Power Board	5
Section 2.2	Display Board	6
Section 3.0	Meter Technical Specifications	7
Section 4.0	Safety Label Definitions and Information	10
Section 5.0	Precautionary/Safety Information	11
Section 6.0	Meter Installation	12
Section 6.1	Mounting the Class 3400 Meter	12
Section 6.2	Main Power Board Connections	12
Section 6.3	Phasing of Line Voltage	14
Section 6.4	Current Sensor Installation & Wiring	14
Section 6.5	Main Power & Current Sensor Wiring Diagram	17
Section 6.6	Line Voltage/Current Sensor Diagnostics	17
Section 6.7	RS-485 Wiring	19
Section 6.8	RS-232 Communications	20
Section 6.9	Modem Wiring	23
Section 6.10	Modbus RTU Wiring	26
Section 6.11	BACnet Wiring	27
Section 6.12	Connecting Class 3400 Meters to USB Key using RS485	27
Section 6.13	Ethernet Communications	28
Section 7.0	Multiple-Load Monitoring	30
Section 8.0	Preventative/Scheduled Maintenance	32
Section 9.0	Lithium Battery Replacement	32
Section 10.0	Class 3400 Meter Features	34
Section 11.0	Reading The Class 3400 Meter Display	37
Section 12.0	Class 3400 Meter Expansion Board	38
Section 12.1	Expansion Board Connections	39
Section 12.2	Pulse Type and Valve	39
Section 12.3	Load Control	41
Section 13.0	Frequently Asked Questions	42
Section 14.0	Protocol Descriptions	44
Section 15.0	Meter Limited Warranty	49

1.0 INTRODUCTION

The E-Mon D-Mon® Class 3400 meter is a 3-element meter with communications. The device is used to monitor electric power usage of individual loads after the utility meter and store kW and kVAR data for automatic meter reading. The Class 3400 meter is dual protocol capable and provides both RS485 and Ethernet communications. Installation must only be performed by qualified personnel and in accordance with these instructions and all applicable local and national electrical codes. E-Mon and its representatives assume no responsibility for damages or injury resulting from the improper installation of this meter.

Verify the input voltage rating and configuration on the unit panel label to ensure that it is suitable for the intended electrical service. Class 3400 meters labeled for 120/208V service MUST NOT be installed on service feeds of 277/480 volts or 347/600 and vice versa.

Verify that the Class 3400 meter's current sensors are sized suitably for the load to be monitored. Compare the color of the arrows on the current sensors to the chart below to confirm the correct current sensor is being used.

Sensor Arrow Color Code	Sensor Rating
Brown	100 A
Red	200 A
Yellow	400 A
Black	800 A
Blue	1600 A
White/Black	3200 A

⚠ CAUTION

Internal circuit card components are extremely sensitive to electrostatic discharge. Prior to handling or touching internal circuitry, discharge any static buildup on your person. To discharge yourself, touch a grounded metal object such as conduit or an earth grounded metal enclosure.

⚠ WARNING

Use of this instrument, the E-Mon D-Mon Class 3400, in a manner inconsistent with this manual or not specified by the manufacturer in writing, can cause permanent damage to the unit and/or serious injury to the operator. The protection and safety features provided by this equipment may become impaired or otherwise compromised.

NOTE: **If any trouble arises during installation or functional verification operations, do not immediately remove unit. Before removing the unit, contact E-Mon's technical support department at (800) 334-3666. E-Mon's technical department will assist you in detailed troubleshooting of the Class 3400 installation and assist you in getting the unit operating correctly.**

2.0 INTERNAL ELECTRONIC ASSEMBLIES

The units are comprised of two major subassembly boards, the main power board and the display board. Both circuit boards are mounted inside a NEMA 4X enclosure.

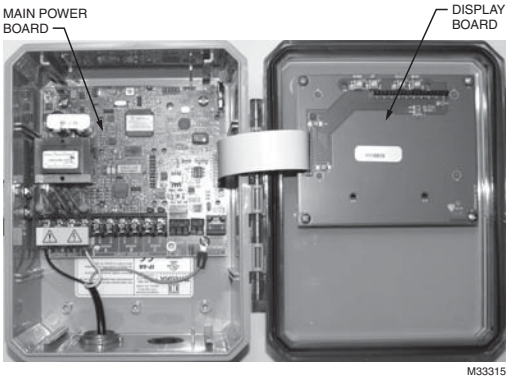

Fig. 1. Internal Electronic Assemblies.

2.1 Main Power Board

Connections to this board include the MAIN Power Input and current sensors.The MAIN Power Input terminals are positions one through four on the four position screw terminal block, TB1. These terminals are covered with a protective shield for safety purposes. The current sensor assemblies interface to the TB1 positions 6 thru 10; care must be exercised to ensure that each current sensor is connected to the correct terminals. One three terminal screw connector (RS485) is for RS-485 communications. One two terminal screw connection (output) is for a pulse output. One RJ-45 jack (J8) is provided for 10/100-baseT Ethernet.

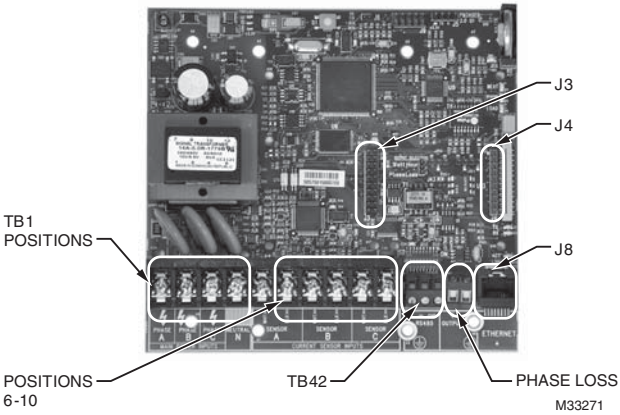

Fig. 2. Main Power Board Connections.

2.1 Main Power Board (continued)

There are also two headers present for adding option cards. Header J3 is 20 positions for use with an I/O board with up to two relays, two pulse inputs and two pulse out puts.

2.2 Display Board

The display board connects to the main power board via a flex ribbon cable and the board mounts on the inside of the housing door.

No additional connections to the display board are required. The display board's LCD readout indicates the metered values as well as errors associated with the Class 3400 meters, such as phase loss or sensor error conditions.

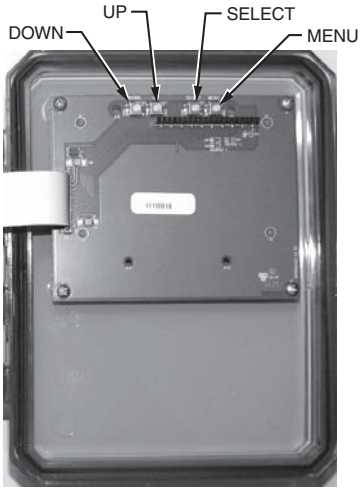

M33320

Fig. 3. Display Board.

3.0 METER TECHNICAL SPECIFICATIONS

Ordering Information: Define brand, class, input voltage, current sensor rating, enclosure, protocols/options, expanded feature package, and sensor type in the format A-BB-CCC-DDDD-E-FF-G-HHH, where:

A = Brand: E for E-Mon, H for Honeywell
BB = designates Class: 3200 (32), 3400 (34), or 5000 (50) meter
CCC = input voltage: (208, 480, 600)
DDDD = current sensor rating: (100, 200, 400, 800, 1600, 3200)
E = enclosure: J = metal (type 1), R = non-metallic (type 4X)
FF= protocol/options:

	RS-485	Ethernet	Option
01	EZ7	EZ7 Ethernet	None
02	Modbus RTU	EZ7 Ethernet	None
03	BACnet MS/TP	EZ7 Ethernet	None
04	EZ7	Modbus TCP/IP Ethernet	None
05	EZ7	BACnet IP Ethernet	None
06	Modbus RTU	Modbus TCP/IP Ethernet	None
07	Lonworks FT-10	EZ7 Ethernet	None
08	Lonworks FT-10	Modbus TCP/IP Ethernet	None
09	EZ7	EZ7 Ethernet	Modem
10	EZ7	Modbus TCP/IP Ethernet	Modem
11	EZ7	BACnet IP Ethernet	Modem

G = Expanded Feature Package: package = X, no package = “blank”
(on Class 3400 only)
HHH= Sensor Type: kit=split-core, scs= solid-core, non-supplied blank”

EXAMPLE:

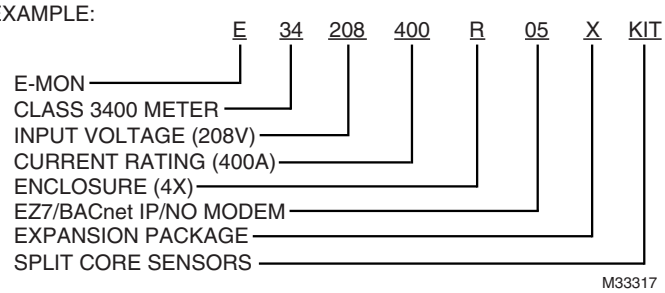

3.0 METER TECHNICAL SPECIFICATIONS (CONTINUED)

Input Voltage Configuration	3-wire (Delta) Or 4-wire (Wye)	
Mains Voltage Input	Up To 600 VAC RMS Available	
Input Power	6 VA Maximum Rating	
Current Sensor Rating	Up To 3200 Amps RMS AC Available	
Power Factor	0.5 Leading Or Lagging	
Line Frequency	50-60 Hz	
Metering Accuracy	ANSI C12.20	
Voltage Operating Range	+/-10% Of Rated Load	
Temperature Range	-20 C To +50 C (Standard indoor enclosure):	
Relative Humidity Range	0-95% Non-condensing	
Altitude	2000 Meters Maximum	
Voltage Overload	+25% Continuously: +100% For 20 Cycles	
Current Sensor Overload	100% For 1 Minute Without Damaging Meter	
Pollution Degree	Degree 2 In Accordance With IEC 664	
Installation (Overvoltage) Category	Category III	
Measurement Category	Category III	
Enclosure Material	UL Type 1 or Type 4X	
Display Readout	4-line LCD	
Standard Ranges	4-Wire Wye 208 VAC: 100, 200, 400, 800,1600 Amp 3-Wire Delta240 VAC: 100, 200,400,800,1600 Amp 4-Wire Wye 480 VAC: 100, 200, 400, 800,1600 Amp 3-Wire Delta480 VAC: 100, 200,400,800,1600 Amp 4-Wire Wye 600 VAC: 100, 200, 400, 800,1600 Amp	
Modem Interface	Cable:	UL-listed/rated telephone cord, 4-conductor, 300 VAC, stranded conductors 22-26 AWG.
	Cable Connector:	RJ-11 IDC termination
	Ckt Input Isolation	5.3K VAC
	Baud Rate:	9600

3.0 METER TECHNICAL SPECIFICATIONS (CONTINUED)

RS-485 Serial Communications	Cable:	UL-listed stranded conductors, 22-26 AWG.
	Input/Output Voltage:	Ground-isolated +/-5.4VDC
	Cable Connector:	Screw terminal termination
	Circuit Input Isolation:	5.3kVAC
	Max Cable Distance:	4000 feet
	Max Network Nodes:	64 cabling nodes (including master)
	Baud Rate:	9600
Ethernet Communications Cable	Cable:	UL-Listed CAT-5e cable, 8-conductor, stranded 24 AWG
	Cable Connector:	RJ-45 termination
	protocol:	10/100 base T
	Cable Distance:	450 feet
Load Control Contacts:	Contact Closure:	Set by user
	Contact Rating:	28Vdc@10A; 240VAC@10A
	Mating Connector:	Weidmuller PN 1526510000
	Isolation Voltage:	1.5K VAC for 1 minute
Recommended In-line Fuse	Manufacturer:	Littlefuse
	Mfg. Part No:	KLDR.100
	Rating:	100mA, time-delay, 600VAC cartridge fuse
Battery Cell	Description:	Non-rechargeable cell used for memory retention
	Manufacturer:	Panasonic
	Mfg Part No:	CR2032
	Working Voltage:	3 Vdc
	Current Capacity:	225 mAHr
	Electrolyte:	Manganese Dioxide Lithium

4.0 SAFETY LABEL DEFINITIONS AND INFORMATION

The Class 3400 meter may contain one or more of the following labels. Operator(s) should familiarize themselves with the meaning of each label to minimize risk.

The presence of this label is a cautionary indicator identifying a danger risk. The manual should be consulted prior to proceeding.

The presence of this label indicates an electrical shock hazard exists in the location or area where the label is placed. Prior to proceeding, the MAINS power must be disconnected and the manual consulted for safety information.

5.0 PRECAUTIONARY AND SAFETY INFORMATION

⚠ CAUTION

Internal circuit card components are extremely sensitive to electrostatic discharge. Be careful not to touch internal circuitry prior to discharging any static buildup on your person. To discharge yourself, touch a grounded metal object such as conduit or an earth-grounded metal enclosure.

⚠ WARNING

High voltages present on main PCB terminal block TB1 screw terminals. Risk of serious injury and/or electrical shock exists. Prior to performing any wiring operations, review all contents of the user manual and de-energize the MAINS power switch. Only qualified personnel should perform installation wiring. Installation wiring must comply with all local and national electrical codes.

⚠ WARNING

Failure to ground the enclosure creates a possible shock hazard. Do not operate the Class 3400 meter without a protective earth wire attached securely to the PE terminal screw. After installing protective earth wiring, secure the screw tightly (7 N-m torque.)

⚠ WARNING

NEVER open front panel of unit while unit has MAINS power applied. Failure to comply can increase the risk of serious injury and/or electrical shock.

6.0 METER INSTALLATION

6.1 Mounting the Class 3400 Meter

Use appropriately sized mounting hardware to fasten the meter enclosure to the selected mounting surface. The four housing mounting holes are centered 8.75” H x 4” W for the CL3400.

NOTE: **Units housed in UL Type 1 enclosures must only be installed in indoor environments, where they will not be affected by the elements.**

6.2 Main Power Board Connections

1. *Installing a temporary ground for ESD protection:*
   With all circuits de-energized, connect a temporary protective earth ground connection for ESD protection. Prior to performing any unit wiring, be sure to discharge any static on your person.

2. *Installing the Class 3400 protective earth ground:*
   Connect an earth ground wire to the Class 3400 protective earth ground lug with a torque of 7 N-m.

WARNING

Failure to attach the protective earth ground wire securely to the meter creates a potential shock hazard. Do not operate the meter without a protective earth ground connection securely installed.

3. *Wire Entry:*

   CL3400 meters are supplied with two 3/4” conduit K.O.s on the bottom of the 4X enclosure for all wiring. The Type1 enclosures are supplied with three 3/4” conduit K.O.s.

   Route the appropriate cabling to and through the respective enclosure opening.

   After installing the conduit fitting and conduit, verify that each conduit slip nut is securely tightened to its respective conduit fitting. Any unused openings must be sealed with a UL rated plugging device suitable for the rating of the enclosure.

4. *Unit MAINS Wiring:*

   The first four positions of terminal block TB1, located at the bottom left corner of the main power board, are clearly labeled Phase A, B, C, N (neutral). Earth Ground MUST be connected to the PCB mounting screw in the lower right corner.

   Connect the NEUTRAL wire to the appropriate terminal block position.

6.2 Main Power Board Connections (continued)

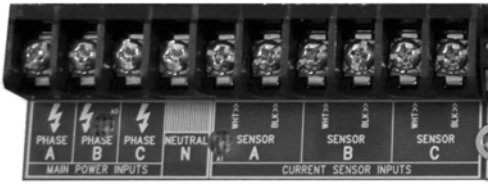

Fig. 4. Terminal Block TB1.

NOTE: For 3-wire delta-type meters, Do NOT connect the NEUTRAL wire. Remove the terminal block screw for this position.

a. Connect the NEUTRAL wire to the appropriate terminal block position.

b. Earth Ground: Connect the Earth Ground to the PCB mounting screw in the lower right corner.

c. External Switch Mechanism/In-Line Fuse Installation

   To ensure a safe installation, the Class 3400 meter requires an external switch mechanism, such as a circuit breaker, be installed on the meter's MAINS input wiring. The switch mechanism must be installed in close proximity to the meter and easily reachable for the operator. This device must also be marked as the disconnecting device for the Class 3400 meter. Install 1/10 Amp Slow Activation in-line fuses with the suitable voltage rating for each conductor phase at the MAINS input to the meter. The fuses must be labeled to indicate voltage and current rating as well as element characteristics.The fuse element must be slow activating type.

d. Connect the three AC main power wires (Phases A, B and C) to their respective positions as labeled on terminal block TB1 and tighten to 7 in-lb. After all conductors are connected to each of their respective terminal block positions and tightened down, verify that each terminal block screw is securely fastened by gently tugging on each conductor.

   Verify that no conductor wires are frayed or shorting to adjacent terminal block positions.

e. Turn ON the AC main power input. The meter display will light up and scroll through 7 displays. Each display is visible for 5 seconds. Display screens are as follows:

   Screen 1 - Total kilowatt-hours (kWh) consumed
   Screen 2 - Peak demand (kW) with date & time stamp
   Screen 3 - Actual load (kW)
   Screen 4 - Average current (amps) per phase
   Screen 5 - Average voltage (volts) per phase
   Screen 6 - Average voltage phase to phase
   Screen 7 - Power factor (PF) per phase

6.2 Main Power Board Connections (continued)

f. Verify the voltage readings on Screen 5 using an AC voltmeter. Typical readings shown below are measured phase to neutral for 4 wire and phase to phase for 3 wire. Readings should be +/- 10% of nominal.

Meter Type	Nominal Voltage	Limits (+/- 10%)
208/240V, 3ø, 4 Wire	120 VAC (L-N)	108 to 132 VAC
480V, 3ø, 4 Wire	277 VAC (L-N)	249 to 305 VAC
600V, 3ø, 4 Wire	347 VAC (L-N)	312 to 380 VAC
208/240V, 3ø, 3 Wire	240 VAC (L-L)	216 to 264 VAC
480V, 3ø, 3 Wire	480 VAC (L-L)	432 to 528 VAC

NOTE: **Meters are powered by phases A and B. The displayed voltages will be the measured AC voltage between phases.**

6.3 Phasing of Line Voltage

The 3-phase AC power input must be in proper phase sequence. If the sequence is incorrect or a phase is missing, there will be a message on the meter's display: "PH Sequence Error" or "PH Missing:. (Refer to the section on Line Voltage Diagnostics if this message is present.) When the line voltage is connected correctly, the meter's display will be blank (no message.)

Wait for the meter display to scroll to the voltage display. Verify that the meter reads correct voltages on all three phases. Repeat Step F.

Once the meter displays the correct line voltages and there are no error messages, you are ready to connect the current sensors to the meter. Before continuing with the installation, verify that the six screens display as follows:

Screen 1 (kWh):	Should read 0.0 kWh; if not, should be reset.
Screen 2 (kW Peak Demand):	kW peak should read 0.0 kW. There will not be a date/time stamp yet. If there is a kW peak recorded, it should be reset later
Screen 3 (kW Load):	Should read 0.0 kW load.
Screen 4 (Amps per Phase):	There should be 0.0 on all three phases.
Screen 5 (Average AC Volts):	See Step F.
Screen 6 (Average AC Volts):	See Step F.
Screen 7 (Power Factor):	There should be 0.0 PF on all three phases.

NOTE: **The meter will be reset later via the software during "startup" procedures.**

6.4 Current Sensor Installation & Wiring

Once the AC voltages have been confirmed to be within acceptable limits, you are ready to install the current sensors. TB1, positions 5 and 6 are the inputs for Phase A, TB1 positions 7 and 8 are the inputs for Phase B and TB1 positions 9 and 10 are the Phase C inputs.

The Class 3400 meter can be used with two types of current sensors:

1. Split-core current sensor. This sensor opens so that it can be attached around the circuit being monitored without interrupting power. Unless otherwise specified, all Class 3400 meters are supplied with this sensor type.
2. Solid-core current sensor. This sensor does not open and requires the monitored conductor to be removed from the circuit to install the current sensor. This type is only supplied when specified at time of order.

6.4.1 Installing the Split-Core Current Sensor Assembly

1. Each phase being monitored will require one two-piece current sensor assembly. Open the two-piece current sensor assembly by releasing the nylon clamp using a flathead screwdriver.

Fig. 5. Split Core Sensor.

2. Reassemble the current sensor assembly around the conductor(s) to be monitored. Ensure the current sensor halves marked “Load” are both facing the load side of the conductor. The colored arrow will be on the source side of the conductor being monitored and MUST be pointed in a clockwise direction around the conductor being monitored. Tighten the nylon clamp to complete the assembly.

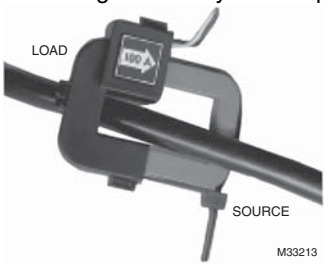

Fig. 6. Split Core Sensor.

IMPORTANT:

When looking from the source side of the conductor(s) being monitored, you should see the arrow on the current sensor assembly. The arrow should be pointing in a clockwise direction around the conductor(s) being monitored. If the arrow is not positioned on the source side, inaccurate readings will result.

6.4.2 Current Sensor Wiring

Once the current sensors are installed onto their appropriate phase conductors, you can begin terminating the current sensors onto the Class 3400 main board. The current sensors can be extended up to 500 feet for remote monitoring applications. To extend the length of the wires, use #22 AWG twisted-pair wire with one white and one black wire.

The easiest way to connect the current sensors is to use the meter's built-in current sensor diagnostics. To do this, there must be at least 1% of the meter's current rating (amps) flowing in each of the conductors being monitored. The Class 3400 meter's diagnostic program will provide data to ensure that the current sensor installation is done properly.

The current sensor connection points are located at the bottom right of the main power board. These are terminals 5 through 10 of terminal block TB1. Each sensor connects to two terminals one labeled "Black" and the other "White." Current sensors should be connected to the meter one at a time and verified using the current sensor diagnostic program.

Connect one of the current sensors to TB1 terminals 5 and 6 (Phase A). Wait 5 seconds and look at the meter display.

If the meter displays an error message (see below), remove the wires from terminals 5 and 6 and install them on terminals 7 and 8 (Phase B). if an error message occurs with the sensor attached to terminals 7 and 8, try again on terminals 9 and 10 (Phase C).

The "CT Error: * "message will disappear when the current sensor is connected to the correct terminals (phase).

Error Messages: CT ERROR: A
CT ERROR: A B
CT ERROR: A C

Refer to the section on Current Sensor Diagnostics for assistance in troubleshooting these errors.

6.4.3 Main Power

After the meter circuit wiring has been examined for correctness, power may be applied to the circuit board. There are three LEDs located in the upper right corner of the Meter Board labeled BEAT, STATUS and LOAD. The BEAT and STATUS LEDs will blink once per second when the meter is operating normally, twice per second if there is a problem.If the monitored circuit is under load the LOAD LED will actively blink. A heavy load will cause the LED to blink faster than a light load. Very light loads will result in an extended blink time.

6.5 Main Power & Current Sensor Wiring Diagram

3-PHASE INSTALLATION DIAGRAM

NOTES:

LINE VOLTAGE CONNECTIONS: #14-22 AWG

SENSOR CONNECTIONS: W = WHITE LEAD B = BLACK LEAD

NEUTRAL NOT USED IN DELTA SYSTEM.

LITTLEFUSE PART NUMBER KLDR 100.

1 1/10A 600 VAC INLINE FUSE PER CONDUCTOR. LITTLEFUSE PART NUMBER KLDR, 100.

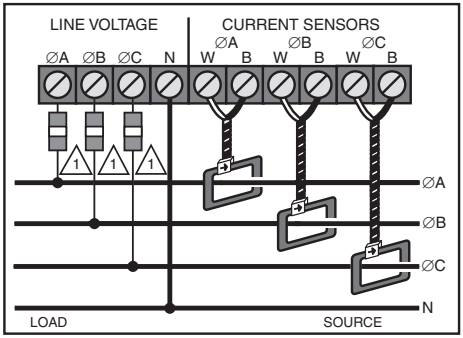

M33194

Fig. 7. Current Sensor Wiring Diagram.

6.6 Line Voltage/Current Sensor Diagnostics

Following is a list of diagnostic messages that may appear on the meter display. DIAGNOSTIC MESSAGES SHOULD NOT BE ON CONTINUOUSLY WHEN THE METER IS INSTALLED PROPERLY AND IS IN WORKING ORDER.

6.6.1 Line Voltage Diagnostics

The diagnostics program detects line voltage faults by displaying one of two messages:

PH Missing: B C or Phase sequence error.

Phase sequence error indicates that the 3-phase line voltage is not hooked up in the proper phase sequence. This message should never be seen continuously on the display during normal operation. The meter will not display correct electrical data in this condition. The phase sequence problem must be remedied in order for the meter to work properly.

PH Missing: B C indicates that the line voltage is missing on Phase B and/or Phase C. This message will appear whenever the power on either Phase B or Phase C is off. Screen 5 (Voltage per Phase) will also indicate a loss of line voltage.

6.6.2 Current Sensor Diagnostics

The load current must be at least 1% of the meter's rated load in order to use the diagnostic function. Current sensor diagnostics can detect:

1. Reversed current sensors
2. Incorrect phase correspondence
3. Unusually low power factor (0.642 or lower)

CT Error: (ABC) is used to detect the swapping of current sensor phases. This message could (in some rare cases) indicate a low (<65%) power factor condition. This message may appear intermittently due to changes in line conditions. It should not be on continuously. (See Section 6.4.1.)

NOTE: **If you have connected the current sensor to all three terminals and the error message is still appearing, reverse the black and white wires and repeat the previous steps until the correct connection is found.**

If the ***CT Error:*** message disappears, you have found the correct sensor connection; however, the current sensor was not installed properly around the conductor, or the sensor wires were extended and not spliced together correctly. Correct the sensor installation, reconnect the black wire to the black terminal and the white wire to the white terminal on the plug and reinstall the plug into the correct phase terminal for that current sensor. The error message should disappear and the current sensor is now installed properly.

If the ***CT Error:*** message does not disappear at any time while trying all 3 inputs both ways, check the AC voltage input from the current sensor between the black and white wires using an AC voltmeter. It will read approximately zero volts indicating that the load current is very small (or zero) or the current sensors are not secured properly (tight connection between core halves or lead splices not secure.)

Once the first current sensor is connected properly and the error message disappears, repeat the previous procedure for the remaining two current sensors. When all error messages have disappeared and all sensors are installed correctly, the meter is operational.

6.7 RS-485 Wiring

RS-485 communication allows a computer or modem to communicate with one or more Class 3400 meters. You can connect as many as 52 meters along a 4000-foot RS-485 cable run.

There are three communication protocols available through the Class 3400 RS-485 connection. They are EZ7, Modbus RTU, BACnet MS/TP, and Lonworks FT-10 (Lonworks FT-10 available only through an optional module). The protocol is chosen when ordering the Class 3400 meter. A second protocol is available through the Ethernet port. The Ethernet protocol is also chosen when the meter is ordered. See ordering information for the available choices.

Daisy-Chain Method

This is the simplest method for connecting meters together.

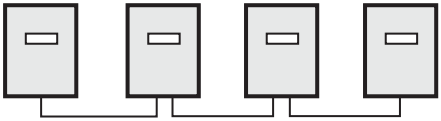

Fig. 8. Daisy-chain Configuration.

1. Connect the +(high) terminal of PORT 1 of each 3400 meter together so that the + terminals on all meters are linked, + to + to +...
2. Connect the -(low) terminal of PORT 1 of each 3400 meter together so that the - terminals on all meters are linked, - to - to -...
3. Connect the GND terminals of PORT 1 to meter 1 ONLY. The GND terminals should not be linked to each meter.

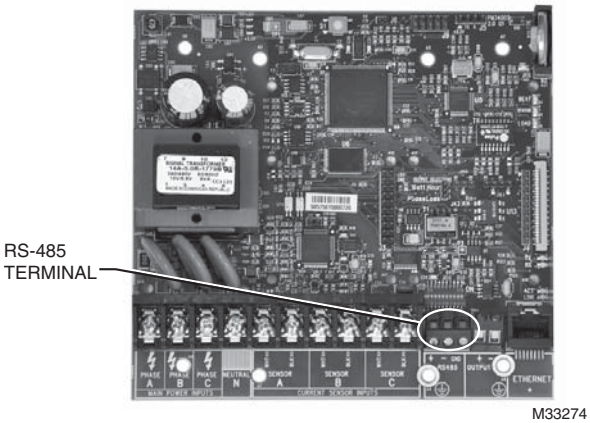

Fig. 9. RS-485 Terminal.

6.7 RS-485 Wiring (continued)

After performing these steps, all of the meters will be connected in a daisy chain configuration. This network of meters can then be connected to the RS-485 network and communication can be established.

Internal Modem

An optional internal modem inside one meter will communicate with the others via the RS-485 network. Simply connect one of the two telephone jacks on the modem to the telephone line to complete the installation.

Local Computer

A local computer installed in the building can communicate with the RS-485 network. The computer must be connected to an RS-232 key. The RS-232 key is then connected to an available RS-485 jack in the meter using an RJ-11 cable.

NOTE: **Don't confuse the modem's telephone jacks with the RS-485 jacks!!!**

NOTE: **When using one meter with an internal modem, only the telephone line is connected. RS-485 is not needed.**

6.8 RS-232 Communications

6.8.1 Hardwired System using the RS-232 Communication Key

The RS-232 communications key allows you to connect Class 3400 meters to a personal computer that has the E-Mon Energy™ software installed. The computer communicates with the meters through the RS-232 key.

The RS-232 key must be located within 15 feet of the host computer.

6.8.1 Hardwired System using the RS-232 Communication Key (continued)

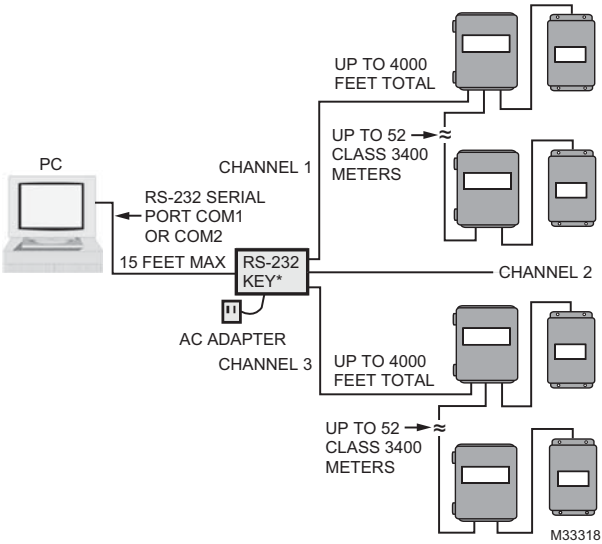

Fig. 10. RS-232 Configuration.

6.8.2 Connecting the RS-232 Key to the Computer

The RS-232 key is supplied with:

a. (1) 8-conductor cable fitted with RJ-45 plugs
b. (1) DB-9 serial COM port adapter
c. (1) AC adapter that converts 120VAC to 9VDC for powering the RS-232 key

Connection Steps:

1. Connect the 8-conductor cable to the left-side jack (labeled “RS232”) on the rear panel of the RS-232 key.
2. Connect the appropriate COM port adapter (DB-9) to the serial port on the back of the computer. Plug the 8-conductor cable from the RS-232 key into the COM port adapter.
3. Connect the provided AC adapter into the rear panel input on the RS- 232 key. Plug the adapter into a 120VAC outlet. On the front panel of the RS-232 key, two LEDs (POWER ON and AC ON) will light up.

NOTE: When the E-Mon Energy™ software is accessed on the computer, a third LED (RS232 READY) will turn on. This indicator will light up as soon as the E-Mon Energy software is booted up and the correct COM port is set up via the settings provided in the software’s Locations menu.

6.8.3 Connecting Class 3400 Meters to the RS-232 Key using RS-485

On the rear panel of the RS-232 key, there are three jacks labeled as channels A, B and C. These are RS-485 serial communications ports used to connect the meters. Each of these channels can be connected to as many as 64 individual meters over a total cable distance of 4,000 feet. The channels are independent and must not be connected to each other.

*Do not use any pre-made telephone cables.

1. Plug the 4-wire RJ-11 cable/plug assembly into Channel A (or B, or C) on the RS-232 key. Connect the other end of this cable to the meter via the RS-485 port, at the bottom right of the Class 3400 meter main power board. “DATA Link” supplied with each RS-232 key should be utilized to connect key to meters. Additional “DATA Link” terminal blocks can be purchased as necessary.

NOTE: The total combined cable length must not be more than 4000 feet.

2. Each meter has one yellow (TX) and one green (RX) LED located on the right side of meter board just below the ribbon cable. If the system is properly wired, these two LEDs will be OFF. These LEDs will flash when the computer and meter are communicating.

Local Computer

A local computer installed in the building can communicate with the RS-485 network utilizing E-Mon’s RS-232 conversion key. The RS-232 key is connected to the RS-485 terminals in the closest meter using a cable with an RJ-11 plug terminating the end that is plugged into the key and is open wiring on the other end for attachment to the meter’s 3-screw RS-485 terminal block.

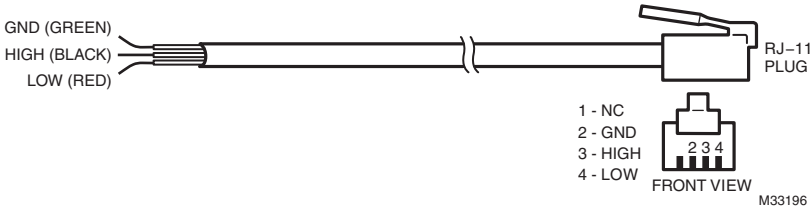

Fig. 11. RS-485 Wiring.

6.9 Modem Wiring

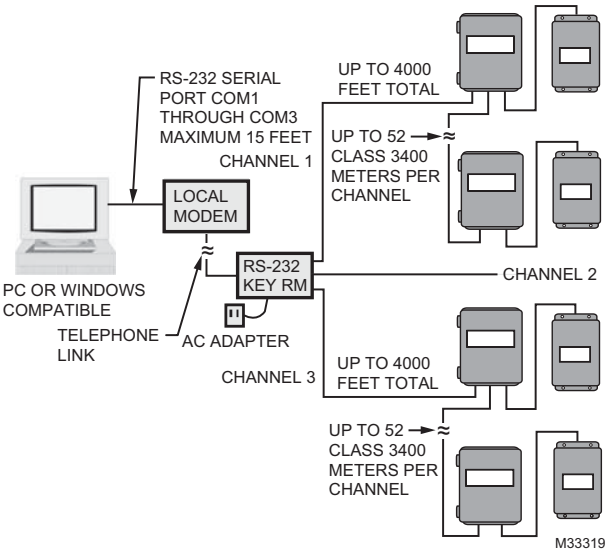

Fig. 12. Modem Configuration.

6.9.1 Built-In Modem (RS-232 KEY RM)

The RS-232 key with built-in modem connects the entire RS-485 network of Class 3400 meters to a telephone line.

** Refer to Section 6.7 for RS-485 network connections.

On the back panel of the RS-232 key/modem, the left jack (RS232) is not used in most cases since there is no local host computer.

The two jacks at the top center of the rear panel on the RS-232 key/modem are for connecting the phone line. Connect either one of these two jacks to the telephone line.

IMPORTANT:

The telephone line should be dedicated exclusively to the automatic meter reading system. Never connect to a telephone line used by other modems or fax machines. If there are telephones connected to this phone line, the proprietor must be aware that all phones must be on "hook" in order for the modem to work. A dedicated phone line is suggested for system reliability.

6.9.2 External Modem

1. All meters should be connected to the RS-232 key as described in 6.8.2.
2. DISCONNECT POWER TO THE RS-232 KEY. Remove the cover by removing the 2 screws from the bottom of the enclosure.
3. On the circuit board, locate the blue jumpers J7 (MODEM) and J8 (ex-MODEM). If these jumpers are set in the DIRECT position, you must move the jumpers so they are set in the MODEM position. Replace the cover and secure the enclosure.
4. Connect the RS-232 key to the external modem using the supplied 8-conductor flat modular cable.
5. Connect the 9VDC adapter to the power input on the back of the RS-232 key and plug it into a 120VAC outlet.

IMPORTANT:

The modem should use a phone line that is dedicated exclusively to the AMR system. Do not use a phone line that is shared by another modem or fax machine.

6.9.3 Baud Rate Selection

The communication baud rate is selected by means of DIP switch S2 positions 3 and 4 on the circuit board. There are four (4) selections: 9600 (factory default), 19200, 38400, and 76800.

1. Select 9600 when using the Class 3400 meter with a modem.
2. The baud rate on the meter must always match the baud rate selected in the E-Mon Energy software; otherwise, communications will not work.
3. After a baud rate change, press CPU Reset to register the change.
4. All meters in the daisy-chain circuit must be set at the same baud rate.
5. The DIP switch is located above the RS-485 terminals.

NOTE: USE ONLY POSITIONS 3 AND 4 - DO NOT CHANGE ANY OTHER POINTS.

The selections are noted below.

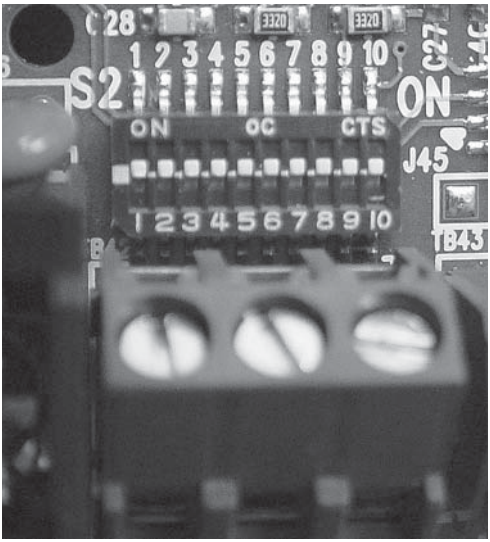

3	4	BAUD RATE
ON	ON	9600
OFF	ON	19200
ON	OFF	38400
OFF	OFF	

M33277

Fig. 13. Baud Rate.

6. Using other than 9600 BAUD will reduce the maximum cable length allowed for communication.

6.10 Modbus RTU Wiring

The Class 3400 Modbus meter communicates with building automation equipment over a 2-wire (3-conductor) RS-485 network using Modbus RTU protocol. The meters are networked in a daisy-chain configuration (Section 6.7) with BELDEN 1120A cable or equivalent. The cable rating of 600V allows the RS-485 network to be connected to 480-volt meters. Up to 52 meters can be installed on a network string. The maximum combined length of all daisy-chained cables must not exceed 4000 feet.

The meter-to-network connection is through the 3-screw terminal which is located on the Main Power Board of the meter.

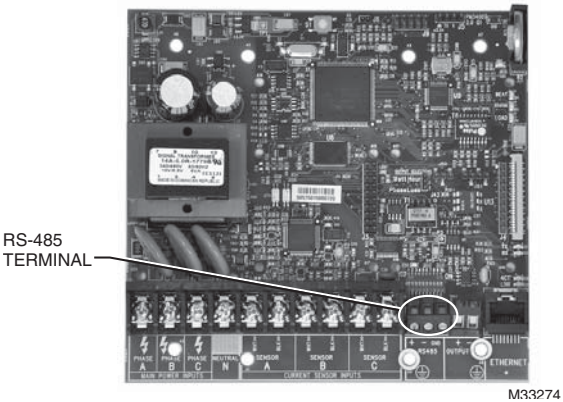

Fig. 14. Modbus RTU Wiring.

The meter is shipped with a Modbus ID number of 01. This must be changed if the network has more than one meter installed. The change must be done before the meter is introduced into the network. The meter can be numbered from 1 to 247. There can be no duplicate numbers on a network, so caution must be taken when assigning a meter ID number prior to its installation on the RS-485 network.

SEE SECTIONS 10 AND 11 FOR INSTRUCTIONS ON CHANGING I.D. AND IP ADDRESSES.

6.11 BACnet MS/TP Wiring

BACnet MS/TP wiring is the same as Modbus and EZ7 wiring. See Sections 10 and 11 for instructions on changing I.D. and IP addresses.

6.12 Connecting Class 3400 Meters to the USB Key using RS485

The USB Key plugs into the PC's USB port and provides a termination point for the RS485 wiring from the meters. Up to 52 meters can be "Daisy chained" with up to 4000 feet total RS485 wiring. The USB Key is labeled for "plus (+)", "minus (-)", and ground and the wiring must match the same positions on the meters. If more than 52 meters are to be monitored, additional USB Keys can be utilized to connect them to the PC.

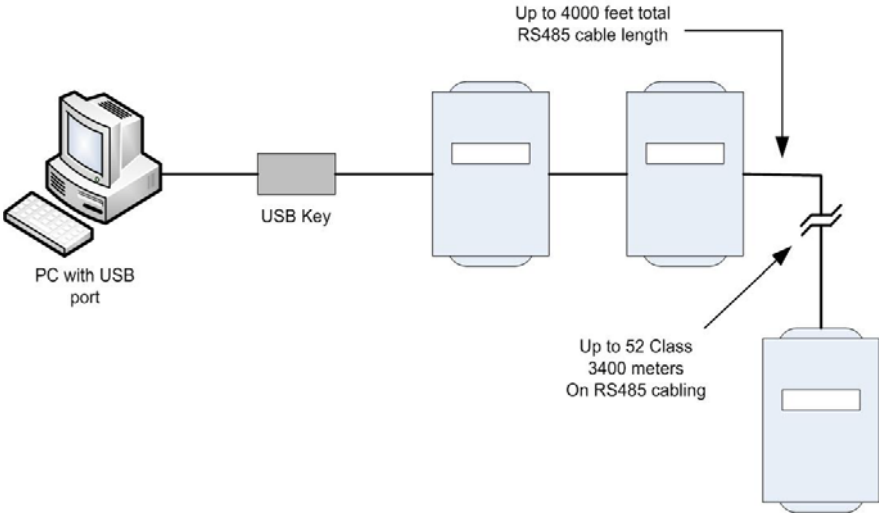

Fig. 15. Connecting Class 3400 Meters to the USB Key using RS485

6.13 Ethernet Communications

Ethernet/IP communications connections are provided through an RJ-45 connector(J8) in the lower right corner of the main power board. This port can be connected directly to a network port of a PC using a Cat. 5e crossover cable.

Two LEDs are provided directly above the connector. The LINK LED is yellow and when lit, indicates ethernet connectivity. The ACT led is green and when lit, indicates communication activity.

The communication protocol for the Ethernet port is selected when ordering the meter. The available choices are EZ7, Modbus TCP/IP and BACnet IP. See the ordering information for the available choices in combination with the RS-485 output.

Class 3400 Ethernet/IP Addressable meters can be tied into a local Ethernet network individually. Multiple RS-485 meters to Ethernet requires optional “EKME” device. Each device that is connected directly to the ethernet network requires a unique IP address.

SEE SECTION 10 FOR INSTRUCTIONS ON CHANGING ID AND IP ADDRESSES.

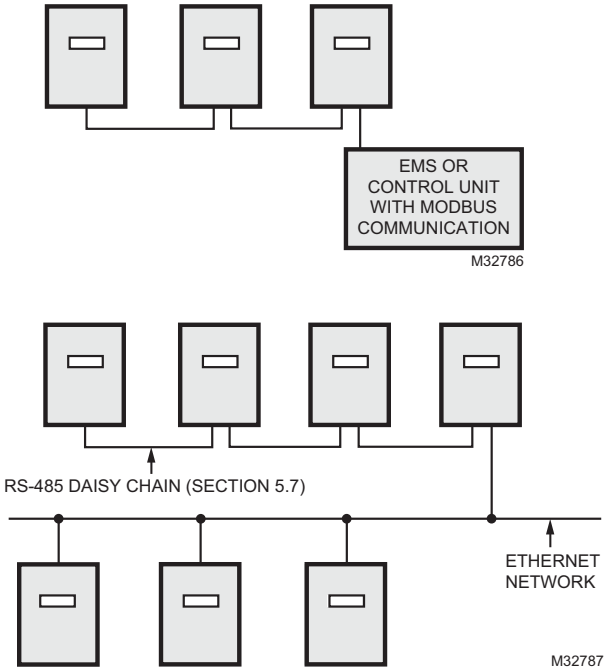

Fig. 16. EMS or Control Unit with Modbus Communication RS-485 Daisy Chain Ethernet Network.

7.0 MULTIPLE-LOAD MONITORING

The E-Mon D-Mon Class 3400 meter provides extreme flexibility by allowing additional sets of current sensors to be used in parallel so multiple load locations can be monitored by one meter. This feature allows a totalized display readout from two or more load circuits.

You may use parallel sensors to monitor specific breakers from one panel, specific breakers from more than one panel, two or more complete panels, etc.

When paralleling current sensors, the following rules must be followed for accurate readings:

1. Current sensors must be installed in complete sets of three, with a maximum of three sensors installed in parallel per phase.
2. All sensors used in parallel must be of the same amperage rating (all 100-amp, all 400-amp, etc.) The rating is determined by the current rating of the meter. For example, a 200-amp meter must use extra sets of 200-amp current sensors.
3. All locations being monitored must have the same power source. A 480-volt meter cannot monitor a 208-volt load, nor can a meter monitor two-480 volt loads if they are from different originating power sources or from different transformers.
4. Multiply the meter display readings by the number of sets of current sensors installed. Example: Meter readings of 5 kWh with 2 sets of current sensors - 10 kWh is the actual usage. (5 x 2=10.)

NOTE: One set of current sensors equates to three sensors, one per phase. The multiplier only applies when extra sets of current sensors are installed on one meter. If you are using only one set of three current sensors, the multiplier is not required.

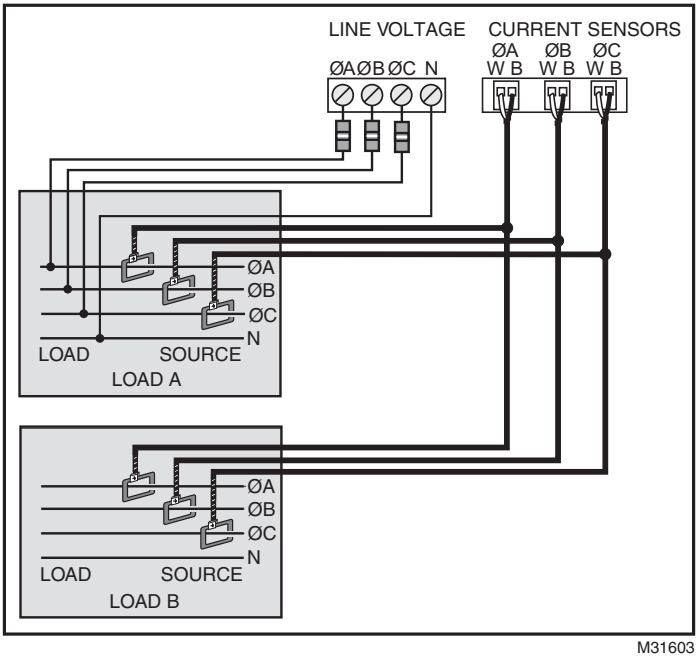

Fig. 17. Multiple-load Wiring Diagram.

8.0 PREVENTATIVE/SCHEDULED MAINTENANCE

The unit is shipped in a calibrated and fully functional tested condition. Since the unit is factory-calibrated using proprietary firmware algorithms, no internal unit adjustments are necessary.

This unit contains no internal adjustments, so no preventative or scheduled maintenance is required.

No cleaning or decontamination procedures are required for this instrument.

9.0 LITHIUM BATTERY REPLACEMENT

The Class 3400 kWh/Demand meter has a Lithium Battery Cell, which is used to retain the contents of SRAM and the RTC during power outages. The battery has a life expectancy of greater than 5 years.

Nominal Working Voltage	3 Vdc Output
Nominal Current Capacity	225 mAHr
Cell Chemical	Manganese Dioxide Lithium
Operating Temperature Range	-30 to +60 Degrees Celsius
Manufacturer	Panasonic
Manufacturer's Part Number	CR2032

Fig. 18. Battery Specifications at 25 Degrees Celsius.

⚠ WARNING

Only replace battery with Panasonic part number CR2032 only. Use of another battery may present a risk or explosion. See owners manual for safety instructions. Internal circuit card components are extremely sensitive to electrostatic discharge. Be careful not to touch internal circuitry prior to discharging any static buildup on your person. To discharge yourself, touch a grounded metal object such as conduit or a metal enclosure exterior.

The battery cell is mounted in a coin cell on the upper right side of the main power board. Replace the battery if the low battery warning is on display.

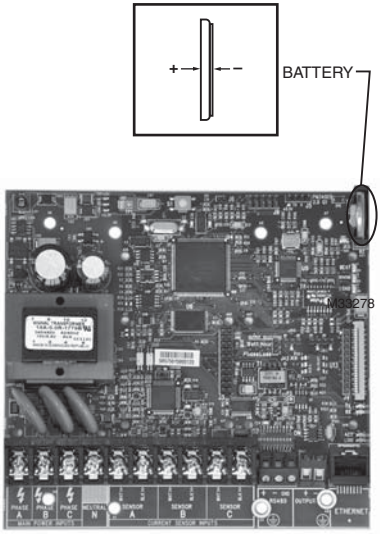

Fig. 19. Lithium Battery Cell.

Use the following procedure to replace the battery cell

1. Disconnect power from the meter at the unit external circuit breaker.
2. Remove the battery from its holder and place on a non-conductive surface.
3. Install new battery into the battery holder.

NOTE: Care should be taken to insure that the replacement battery is installed the same polarity as the battery that was removed. No damage to unit or battery will occur if battery is inadvertently installed in the wrong direction.

4. Dispose of the used battery in accordance with the manufacturers' (Panasonic) instructions.

10.0 CLASS 3400 METER FEATURES DISPLAY BOARD PUSH BUTTONS

Fig. 20. Push Buttons.

Four push button switches (DOWN, UP, SELECT, MENU) can be used to configure the following:

Load Control (with expansion board only)
Date & Time
Device ID
IP Settings
BACnet Settings
Reset KW/KWH Read

10.0 CLASS 3400 METER FEATURES (CONT)

To access any of these items press the MENU button. The list will be displayed and an arrow will appear to the left of LOAD CONTROL. To scroll down the list press the MENU button until the desired item is indicated by the arrow. Then push the SELECT button to enter the configuration screen for that item. The UP and DOWN buttons can then be used to change the configuration field that is flashing. To change to a different field push the SELECT button again. After all changes have been made the display will return to scrolling after approximately 20 seconds.

Load Control

Load control parameters can be entered using the Load Control menu.

Date & Time

Select this field to set month, day, year and time

Device ID

Select Device ID to change the default setting. The default setting is 1A for EZ7 and 1 for ModBus.

IP Settings

The IP Settings menu allows you to select DHCP or static IP address. The static IP address, mask and gateway information can be entered using this menu.

BACnet Settings

The BACnet settings menu allows you to select and change the BACnet setting. To reset, press the MENU button. Press the Up/Down Buttons until the BACnet Settings line is selected.Press the SELECT button to enter the BACnet setting screen. Then, use the up/down keys to change the setting. Then press the Select button to enter the new setting.

Peak Demand Reset

To reset the recorded peak kW demand, press the MENU button until “Reset kW/kWh Read” is indicated by the arrow on the display.

Press the SELECT button.

Reset kW only? N
Reset all? N

Will appear on the display. Press the UP button to change the N to a Y after “Reset kW only?”.

The peak demand will be reset to zero and the meter will return to its normal scrolling display mode.

Reset all will reset kWh as well as kW.

10.0 CLASS 3400 METER FEATURES (CONTINUED)

Display Hold Feature

You can “lock” the scrolling display so that it will stay locked on any one of the 7 screens. On the inside of the door, locate the 4 buttons at the top of the Display Board: Down, Up, Select and Menu.

To stop the display from scrolling, follow these instructions:

The Select button is used to lock the meter’s display so that it stops scrolling and the display remains on one screen.

Use the Up and Down buttons to choose which of the 7 screens you would like to display.

Press the Select button. At the top of the display, you will see the message HOLD1. This will lock the display for 1 HOUR.

Note: The display hold feature has different selectable time periods.

Pressing Select again will show the message HOLD6. This will lock the display for 6 HOURS.

Continuing to press the Select button will provide additional timing choices:

HOLD12: Locks the display for 12 HOURS
HOLD24: Locks the display for 24 HOURS
HOLD: Locks the display indefinitely

To exit the HOLD mode:

Press the Select button as many times as needed until the HOLD message disappears from the display, or simply press the CPU RESET button located near the right center of the CPU board.

** Be sure to exit from the HOLD mode when you are done using this feature.

11.0 READING THE CLASS 3400 METER DISPLAY

The Class 3400 meter features seven different displays showing information in 5 second scrolling intervals. Explanations of these displays are as follows:

Screen 1:	Total Kilowatt-Hours (kWh) Delivered	TOTAL: 123 KWH >
Screen 2:	Peak Demand (kW) with Date & Time Stamp	KW PEAK: 25.5 KW ON DATE: 05/15 AT TIME: 11:45
Screen 3:	Actual Load (kW) with Present Time	LOAD: 24.0 KW DATE: 06/14/11 TIME: 08:46:58
Screen 4:	Average Current (amps) Per Phase	PH-A: 12.3 AMPS PH-B: 10.2 AMPS PH-C: 14.7 AMPS
Screen 5:	Average Voltage (volts) Per Phase	PH-A: 119.8 VOLTS PH-B: 120.2 VOLTS PH-C: 119.5 VOLTS
Screen 6:	Average Voltage (volts) Phase to Phase	P-AB: 0.0 VOLTS P-BC: 0.0 VOLTS P-CA: 0.0 VOLTS
Screen 7:	Power Factor (pf) Per Phase	PH-A: 0.0 % PF PH-B: 0.0 % PF PH-C: 0.0 % PF

Fig. 21. Class 3400 Meter Display Screens.

12.0 CLASS 3400 METER EXPANSION BOARD

The Class 3400 Meter Expansion Board option adds a number of new features to the meter.

Pulse Input

The board contains two pulse inputs for connection to external metering devices which have a dry-contact type of output pulse. The maximum frequency of pulses accepted by the Class 3400 meter is 10Hz.

Pulse Output

The board contains two pulse outputs for use by Building Automation Systems, etc. One pulse is in watt-hours, the second pulse is in VAR-hours. They are not polarity dependant. The maximum current allowed is 400ma and the maximum voltage allowed is 40 VAC or VDC.

Alarm Relay / Load Control

There are two form “C” relays on the expansion board. They are designed to be used for alarming or load control functions on circuits up to 250VAC and 3 amps.

12.1 Expansion Board Connections

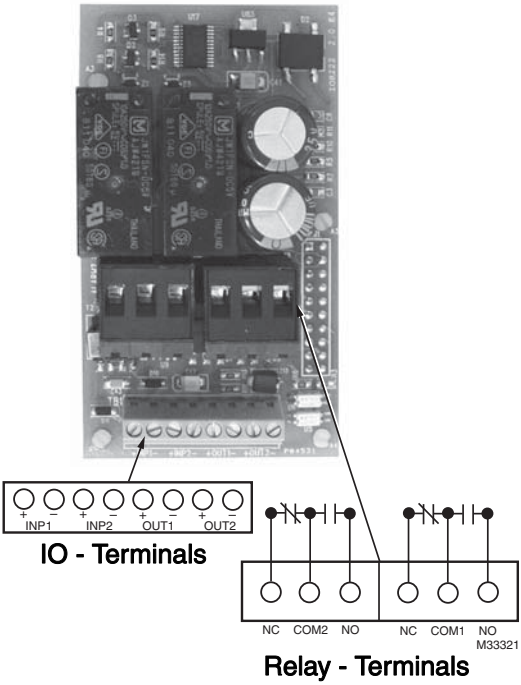

* The input terminals are used with “dry” contacts from third party metering devices. They can be used with mechanical or electronic contacts. If using electronic contacts, be sure to maintain polarity as shown. Maximum pulse frequency is 10Hz. The output terminals are rated for a maximum of 40 volts AC or DC. The maximum load is 400 ma.

** The relay terminals are rated for a maximum of 250 VAC and a load of 3 amps.

Relay #1 is set through the push buttons on the display board. Relay #2 is only accessed through special software commands. See Section 12.3 for details on setting relay #1.

12.2 Pulse Type and Value

The pulse outputs provided by the Class 3400 meter are watt-hours and var-hours. Output 1 is the watt-hour pulse and Output 2 is the var-hour pulse. The pulse value is dependant on the amperage size of the meter. See the chart below for the values.

Meter Amps	Welt-hours / pulse	Var-hours / pulse
100	1.95313	1.95313
200	3.90625	3.90625
400	7.8125	7.8125
800	15.625	15.625
1800	31.25	31.25
3200	62.5	62.5

12.3 Load Control

The Class 3400 Load Control relay is used to activate alarming or load control. The relay contacts are rated for 250 VAC and a maximum of 3 amps load. It can be used for direct control of alarms under 3 amps or as a pilot duty device for high loads.

The relay set points are accessed through push buttons on the meter's display board. The meter's display screen indicates the load settings.

a. LOAD: Present load on the meter
b. LIMIT: Load Control set point
c. VAR: Deactivation variation
d. R/H: Ramp and Hold settings

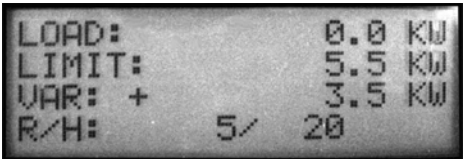

Fig. 22. Load Control.

a. The present load (LOAD) on the meter indicates the actual KW load in real-time.
b. The load control set point (LIMIT) is set to the desired point for the relay to activate. Depending on the alarm/control requirements, this can be used for either high or low load activation.
c. The relay deactivation setting (VAR) is the point where the relay is deactivated. The "+" sign indicates that the deactivation point will occur when the load rises above the set point. This is used when the relay is to be activated on a low load condition. The "-" sign indicates that the deactivation point will occur when the load drops below the set point. This is used when the relay is to be activated on a high load condition. The kw setting indicates the difference from the set point where the relay will deactivate.

In the example above, the relay is set to activate on a low load condition. The relay will deactivate when the load rises (+) above the set point by 3.5 kw. (deactivates at 9 kw).

d. The Ramp (R) setting indicates the time delay for activation when the set-point is reached. This is to prevent relay function on short term load changes, such as a motor start. The example shows a 5 second delay before the relay activates.

The Hold (H) setting indicates the time delay for relay deactivation when the load variation is reduced from the variation that was set. The example shows that there is a 20 second delay before the relay deactivates. This is designed to prevent short cycling of loads when the relay functions.

Section 10.0 describes the pushbuttons and their functions.

13.0 FREQUENTLY ASKED QUESTIONS

Q. When providing line voltage to the meter, can I tap off of the same breaker I am monitoring?
A. Yes, the voltage can be pulled from the same breaker being monitored.

Q. Can the meter's line voltage wires be run in the same conduit as the sensor leads?
A. Yes. There will be no effect if the sensor leads and line voltage wires are run in the same conduit.

Q. Can the meter's communication wires and line voltage be run in the same conduit?
A. It is not recommended to run these wires together due to noise concerns and their effects on the communications signal integrity. Communications wires can be routed separately using the 3/4" conduit port.

Q. How do I find the cost for kWh and kW to bill my tenants?
A. Your local utility bill should list the cost per kWh and kW. If not, simply call your utility and ask them to provide you with the cost per kWh and kW.

Q. What size wire do I use for the line voltage leads?
A. These wires are normally sized at #14 AWG, but be sure to confirm this requirement with your local and national electrical code requirements.

Q. What size wire should I use to extend the current sensor leads?
A. These wires are normally 14-22 AWG, twisted-pair arrangement. Consult your electrical code for proper wiring requirements.

13.0 FREQUENTLY ASKED QUESTIONS (CONTINUED)

Q. The load I need to monitor has parallel feeds. How do I install the current sensors for this application?
A. There are two ways you can monitor parallel feeds. The easiest and preferred method is to clamp the sensors around all feed wires for each phase. The second way to monitor parallel feeds is to clamp the sensor around one of the feed wires for each phase. When you read the meter, the final reading must be multiplied by the number of feed wires for each phase.

Q. I have two subpanels I would like to monitor with one Class 3400 meter. These subpanels are fed by different transformers in the building. Can I parallel sensors and monitor both panels with one meter?
A. No. These panels cannot be monitored with one meter because they are different power sources. When you parallel current sensors, all loads being monitored must be from the same voltage source.

Q. I have 5 breakers in one subpanel I would like to monitor with one class 3400 meter. Can this be done without having to parallel current sensors?
A. Yes. Simply run all the breaker wires through one set of current sensors. Make sure all A-phase circuits are run through the A-phase sensor, and the same for B & C phases. The meter should be sized by the highest amount of current being monitored by one sensor.

Q. I've gone through the troubleshooting guides and I still can't get my class 3400 meter to work. What should I do?
A. Before removing the unit, contact E-Mon's technical services department at (800) 334-3666. E-Mon's technical department will assist you in detailed troubleshooting of the meter installation and assist you in getting the unit running without having to remove and/or return it.

14.0 PROTOCOL DESCRIPTIONS

Modbus Integer Registers:				
Address	Reg	Description	Units	CL 3400
40001*	2	Energy delivered	kWh Pulse	R/W
40003	2	Energy received	kWh Pulse	R/W
40005	2	Reactive energy delivered	kVARh Pulse	R/W
40007	2	Reactive energy received	kVARh Pulse	R/W

* To clear single meter kWh/kVARh, set multiple points at 40001 for 8 points with data set to 0000 0000 0000 0000 0000 0000 0000 0000. Jumper J6 must be closed.

Modbus Float Registers:				
Address	Reg	Description	Units	CL 3400
41001**	2	Energy delivered	kWh	R/W
41003**	2	Energy received	kWh	R/W
41005**	2	Reactive energy delivered	kVARh	R/W
41007**	2	Reactive energy received	kVARh	R/W
41009	2	Real power	kW	R
41011	2	Reactive power	kVARh	R
41013	2	Apparent power	kVARh	R
41015	2	Power factor	% PF	R
41017	2	Current total	Amps	R
41019	2	Current average	Amps	R
41021	2	Voltage line-neutral	Volts-N	R
41023	2	Voltage line-line	Volts-L	R
41025	2	Frequency	Hz	R
41027	2	Phase angle	Degree	R
41029	2	Real power, phase A	kW	R
41031	2	Real power, phase B	kW	R
41033	2	Real power, phase C	kW	R
41035	2	Reactive power, phase A	kVAR	R
41037	2	Reactive power, phase B	kVAR	R
41039	2	Reactive power, phase C	kVAR	R
41041	2	Apparent power, phase A	kVA	R
41043	2	Apparent power, phase B	kVA	R
41045	2	Apparent power, phase C	kVA	R

Modbus Float Registers:				
Address	Reg	Description	Units	CL 3400
41047	2	Power factor, phase A	% PF	R
41049	2	Power factor, phase B	% PF	R
41051	2	Power factor, phase C	% PF	R
41053	2	Current, phase A	Amps	R
41055	2	Current, phase B	Amps	R
41057	2	Current, phase C	Amps	R
41059	2	Voltage, line to neutral, phase A-N	Volts-N	R
41061	2	Voltage, line to neutral, phase B-N	Volts-N	R
41063	2	Voltage, line to neutral, phase C-N	Volts-N	R
41065	2	Voltage, line to line, phase A-B	Volts-L	R
41067	2	Voltage, line to line, phase B-C	Volts-L	R
41069	2	Voltage, line to line, phase C-A	Volts-L	R
41071	2	Phase angle, phase A	Degree	R
41073	2	Phase angle, phase B	Degree	R
41075	2	Phase angle, phase C	Degree	R
41077	2	Reserved		
41079	2	Reserved		
41081	2	Reserved		
41083***	2	External Input 1	Pulse	R/W
41085***	2	External Input 2	Pulse	R/W

** To clear single meter kWh/kVARh, set multiple points at 41001 for 8 points with data set to 0000 0000 0000 0000 0000 0000 0000 0000. Jumper J6 m

*** External inputs are standard on Class 5000 meters and optional on Class 3400 meters (Part of Expanded Feature Package).To clear Auxiliary Inputs, set multiple points at 41083 or 41085 for 2 points with data set to 0000 0000. Jumper J6 must be closed.

BACnet Object Descriptors:					
ID	BACnet Object	Description	Units	BACnet Property	CL 3400
1	Analog Input	Energy delivered	kWh	Present Value	R
2	Analog Input	Energy received	kWh	Present Value	R
3	Analog Input	Reactive energy delivered	kVARh	Present Value	R
4	Analog Input	Reactive energy received	kVARh	Present Value	R
5	Analog Input	Real power	kW	Present Value	R
6	Analog Input	Reactive power	kVARh	Present Value	R
7	Analog Input	Apparent power	kVARh	Present Value	R

BACnet Object Descriptors:					
ID	BACnet Object	Description	Units	BACnet Property	CL 3400
8	Analog Input	Power factor	% PF	Present Value	R
9	Analog Input	Current total	Amps	Present Value	R
10	Analog Input	Current average	Amps	Present Value	R
11	Analog Input	Voltage line-neutral	Volts-N	Present Value	R
12	Analog Input	Voltage line-line	Volts-L	Present Value	R
13	Analog Input	Frequency	Hz	Present Value	R
14	Analog Input	Phase angle	Degree	Present Value	R
15	Analog Input	Real power phase A	kW	Present Value	R
16	Analog Input	Real power phase B	kW	Present Value	R
17	Analog Input	Real power phase C	kW	Present Value	R
18	Analog Input	Reactive power phase A	kVAR	Present Value	R
19	Analog Input	Reactive power phase B	kVAR	Present Value	R
20	Analog Input	Reactive power phase C	kVAR	Present Value	R
21	Analog Input	Apparent power phase A	kVA	Present Value	R
22	Analog Input	Apparent power phase B	kVA	Present Value	R
23	Analog Input	Apparent power phase C	kVA	Present Value	R
24	Analog Input	Power factor phase A	% PF	Present Value	R
25	Analog Input	Power factor phase B	% PF	Present Value	R
26	Analog Input	Power factor phase C	% PF	Present Value	R
27	Analog Input	Current phase A	Amps	Present Value	R
28	Analog Input	Current phase B	Amps	Present Value	R
29	Analog Input	Current phase C	Amps	Present Value	R
30	Analog Input	Voltage line-neutral phase A-N	Volts-N	Present Value	R
31	Analog Input	Voltage line-neutral phase B-N	Volts-N	Present Value	R
32	Analog Input	Voltage line-neutral phase C-N	Volts-N	Present Value	R
33	Analog Input	Voltage line-line phase A-B	Volts-L	Present Value	R
34	Analog Input	Voltage line-line phase B-C	Volts-L	Present Value	R
35	Analog Input	Voltage line-line phase C-A	Volts-L	Present Value	R
36	Analog Input	Phase angle phase A	Degree	Present Value	R
37	Analog Input	Phase angle phase B	Degree	Present Value	R
38	Analog Input	Phase angle phase C	Degree	Present Value	R
39	Analog Input	Reserve A			
40	Analog Input	Reserve B			

BACnet Object Descriptors:					
ID	BACnet Object	Description	Units	BACnet Property	CL 3400
41	Analog Input	Reserve C			
42*	Analog Input	External Input 1	Pulse	Present Value	R
43*	Analog Input	External Input 2	Pulse	Present Value	R
*External inputs are standard on Class 5000 meters and optional on Class 3400 meters (Part of Expanded Feature Package).					

Lonworks SNVT Types Point Map:				
Network Variable Name	SNVT Type	Description	Units	CL3400
nvoKWh_Del	SNVT_count_inc_f	Energy delivered	kWh	R
nvoKWh_Rec	SNVT_count_inc_f	Energy received	kWh	R
nvoKVarh_Del	SNVT_count_inc_f	Reactive energy delivered	kVARh	R
nvoKVarh_Rec	SNVT_count_inc_f	Reactive energy received	kVARh	R
nvoReal_Pwr	SNVT_count_inc_f	Real power	kW	R
nvoReact_Pwr	SNVT_count_inc_f	Reactive power	kVARh	R
nvoAppar_Pwr	SNVT_count_inc_f	Apparent power	kVARh	R
nvoPwr_Fact	SNVT_pwr_fact_f	Power factor	% PF	R
nvoCurrent_Total	SNVT_amp_f	Current total	Amps	R
nvoCurrent_Avg	SNVT_amp_f	Current average	Amps	R
nvoVolt_LN	SNVT_volt_f	Voltage line-neutral	Volts-N	R
nvoVolt_LL	SNVT_volt_f	Voltage line-line	Volts-L	R
nvoFrequency	SNVT_freq_f	Frequency	Hz	R
nvoPhase_Angle	SNVT_angle_f	Phase angle	Degree	R
nvoReal_Pwr_PhA	SNVT_count_inc_f	Real power, phase A	kW	R
nvoReal_Pwr_PhB	SNVT_count_inc_f	Real power, phase B	kW	R
nvoReal_Pwr_PhC	SNVT_count_inc_f	Real power, phase C	kW	R
nvoReact_Pwr_PhA	SNVT_count_inc_f	Reactive power, phase A	kVAR	R
nvoReact_Pwr_PhB	SNVT_count_inc_f	Reactive power, phase B	kVAR	R
nvoReact_Pwr_PhC	SNVT_count_inc_f	Reactive power, phase C	kVAR	R

Lonworks SNVT Types Point Map:				
Network Variable Name	SNVT Type	Description	Units	CL3400
nvoAppar_Pwr_PhA	SNVT_count_inc_f	Apparent power, phase A	kVA	R
nvoAppar_Pwr_PhB	SNVT_count_inc_f	Apparent power, phase B	kVA	R
nvoAppar_Pwr_PhC	SNVT_count_inc_f	Apparent power, phase C	kVA	R
nvoPwr_Fact_PhA	SNVT_pwr_fact_f	Power factor, phase A	% PF	R
nvoPwr_Fact_PhB	SNVT_pwr_fact_f	Power factor, phase B	% PF	R
nvoPwr_Fact_PhC	SNVT_pwr_fact_f	Power factor, phase C	% PF	R
nvoCurrent_PhA	SNVT_amp_f	Current, phase A	Amps	R
nvoCurrent_PhB	SNVT_amp_f	Current, phase B	Amps	R
nvoCurrent_PhC	SNVT_amp_f	Current, phase C	Amps	R
nvoVolt_LN_PhA_N	SNVT_volt_f	Voltage, line to neutral, phase A-N	Volts-N	R
nvoVolt_LN_PhB_N	SNVT_volt_f	Voltage, line to neutral, phase B-N	Volts-N	R
nvoVolt_LN_PhC_N	SNVT_volt_f	Voltage, line to neutral, phase C-N	Volts-N	R
nvoVolt_LL_PhA_B	SNVT_volt_f	Voltage, line to line, phase A-B	Volts-L	R

15.0 METER LIMITED WARRANTY

Subject to the exclusions listed below, E-Mon will either repair or replace (at its option) any product that it manufactures and which contains a defect in material or workmanship.

The following exclusions apply:

1. This Limited Warranty is only effective for a period of (5) five years following the date of manufacture when installed in accordance with manufacturer's instructions by qualified personnel.
2. E-Mon must be notified of the defect within ninety (90) days after the defect becomes apparent or known.
3. Buyer's remedies shall be limited to repair or replacement of the product or component which failed to conform to E-mon's express warranty set forth above.
4. Buyer shall be responsible for all freight costs and shall bear all risk of loss or damage to returned goods while in transit.
5. This Limited Warranty does not cover installation, removal, reinstallation, or labor costs, and excludes normal wear and tear. Buyer shall provide labor for the removal of the defective component or item and installation of its replacement at no charge to E-Mon.
6. This Limited Warranty does not cover any product if: (i) a product is altered or modified from its original manufactured condition, (ii) any repairs, alterations or other work has been performed by Buyer or others on such item, other than work performed with E-Mon's authorization and according to its approved procedures; (iii) the alleged defect is a result of abuse, misuse, improper maintenance, improper installation, accident or the negligence of any party; (iv) damaged as a result of events beyond E-Mon's control or other force majeure events or (v) used in conjunction with equipment, components, accessories, parts or materials not supplied or approved by E-Mon.
7. This Limited Warranty is limited to the obligation to repair or replace the manufactured product. This is the sole and exclusive remedy for any breach of warranty. IN NO EVENT SHALL E-MON BE LIABLE FOR ANY INDIRECT, INCIDENTAL, SPECIAL, CONSEQUENTIAL OR PUNITIVE DAMAGES (INCLUDING ANY DAMAGE FOR LOST PROFITS) ARISING OUT OF OR IN CONNECTION WITH THE FURNISHING OF PRODUCTS, PARTS OR SERVICES, OR THE PERFORMANCE, USE OF, OR INABILITY TO USE ANY PRODUCTS, PARTS OR SERVICES, SALE OF OR OTHERWISE, WHETHER BASED IN CONTRACT, WARRANTY, TORT, INCLUDING WITHOUT LIMITATION, NEGLIGENCE, OR ANY OTHER LEGAL OR EQUITABLE THEORY.
8. EXCEPT AS EXPRESSLY PROVIDED HEREIN, E-MON MAKES NO WARRANTY OF ANY KIND, EXPRESS OR IMPLIED WITH RESPECT TO ANY PRODUCTS, PARTS OR SERVICES PROVIDED BY E-MON INCLUDING, BUT NOT LIMITED TO, THE IMPLIED WARRANTIES OF MERCHANTABILITY AND FITNESS FOR A PARTICULAR PURPOSE. PRODUCTS OR COMPONENTS DISTRIBUTED, BUT NOT MANUFACTURED, BY E-MON ARE NOT WARRANTED BY E-MON AND BUYER MUST INSTEAD RELY ON THE REPRESENTATIONS AND WARRANTIES, IF ANY, PROVIDED DIRECTLY TO THE BUYER BY THE MANUFACTURER OF SUCH PRODUCT OR COMPONENT.

E-Mon
850 Town Center Drive
Langhorne, PA 19047
www.emon.com
info@emon.com

® U.S. Registered Trademark
© 2012 E-Mon
62-0391-01 JPG Rev. 01-12
Printed in United States

E-Mon®
Energy Monitoring Products