Switches, Single Pole
20A, 120-277V AC
Barrel Key Locking Switch

HUBBELL

Features
- Large brass binding head screws with deep slots
- Lock circuits On or Off
- Strip gauge for accurate wiring

Ordering Information

Description	Key Guide Color	UPC	Catalog Number
Chrome operator, back and side wired	Chrome	783585431574	HBL1221RKL

Listings
UL Listed
CSA Certified
Fed. Spec. W-S-896

Specifications

Top Material	Thermoset
Base Material	Thermoset, Red
Key Guide	Chrome
Contacts	Silver Alloy
Terminal Screws	Brass
Ground Screw	Brass (Green)

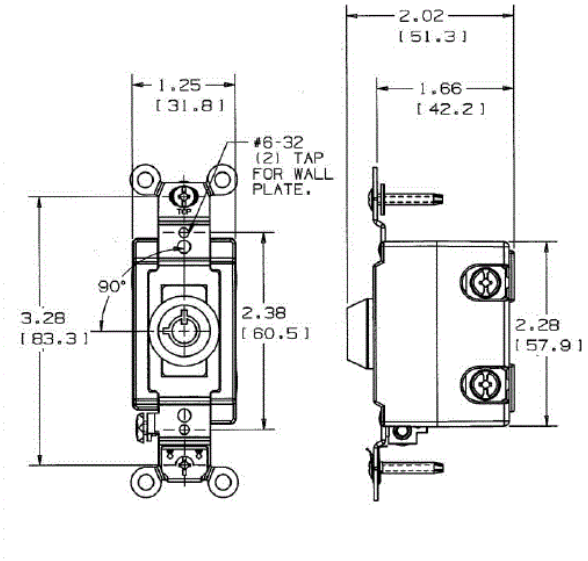

Performance

Electrical

Dielectric Voltage	Withstands 1500V AC minimum for 1 minute
Max. Continuous Current	20A
Max. Working Voltage	277V AC
Overload	Minimum 4.8 times rated current for 100 cycles
Temperature Rise	30°C maximum at rated current

Mechanical

Terminal Accommodations	#14 AWG min. - #10 AWG max. solid and stranded copper wire only

Environmental

Flammability	UL 94V-2
Operating Temperature	Max. continuous: 75°C; Min. continuous: -40°C without impact

Online Resources
Customer Use Drawing
eCatalog
Installation Instructions

Dimensions in Inches (mm)

Hubbell Wiring Device-Kellems • Hubbell Incorporated (Delaware) • 40 Waterview Drive • Shelton, CT 06484
Phone (800) 288-6000 • Fax (800) 255-1031 • Specifications subject to change without notice.

HUBBELL®
Wiring Device-Kellems