Category: ECS
Energy Conservation Series

Prefix:
SRK

Retrofit Series (Name):
Strip Retrofit Kit

RENOVA™
Innovative Lighting Ideas
Energy Efficient Solutions

Strip Retrofit Kit Series

GENERAL DESCRIPTION

The Strip Retrofit Kit (SRK) Series has been developed to retrofit existing strip/industrial fixtures. This series utilizes computer designed reflector technology for optimal fixture efficiency, reduction of energy consumption and improved quality of light. It also provides ease of installation for the installing contractor.

Typical applications for this type of product are interior spaces where appearance and performance are important. Applications include:

- Industrial, Commercial and Manufacturing Areas
- Warehouse Spaces – Isle and Open Areas
- Storage Facilities and Specialized Retail Applications
- Schools, Colleges and Universities

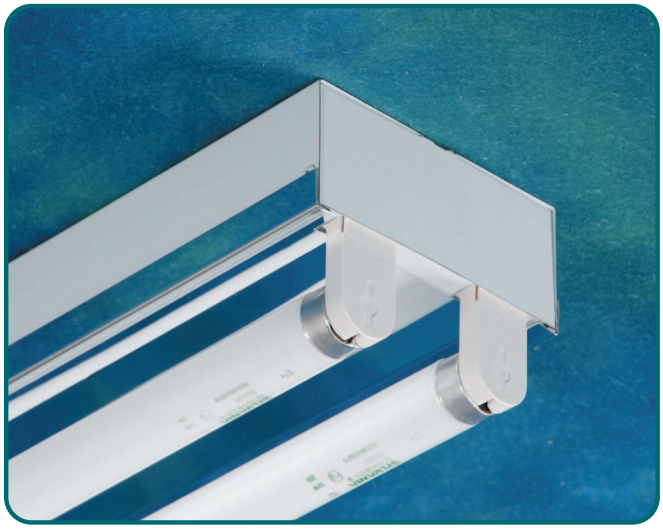

DESIGN FEATURES / SPECIFICATIONS

CONSTRUCTION
- Brackets are precision die formed from 22 ga. cold rolled steel.
- Brackets are designed to fit existing channel widths of 3-7/8" to 5-3/4" ID.
- Brackets can accommodate 1 lamp, 2 lamp, or 3 lamp T8.
- Finish to be pre-painted gloss white polyester powder coat enamel.

REFLECTOR
- Precision die formed optics which has been designed for maximum efficiency and photometric properties using the latest CAD software.
- Choice of optics includes focused, normal and spread beam distribution. Consult factory for custom optics design and spacing criteria options.
- Choice of materials include:
  - Alanod Miro4® Enhanced Specular Aluminum, 95% total reflectance, 25 year warranty.
  - Enhanced Specular Aluminum, 92% total (min.) reflectance, 25 year warranty.
  - High Reflectance White Powder Coated Aluminum, 91% total reflectance, 10 year warranty.
  - Polished Aluminum, 87% total (min.) reflectance, 25 year warranty.
  - Consult factory for availability of all other material choices.

LAMPHOLDERS
- Vossloh-Schwabe® premium type featuring:
  - Anti-vibration internal lamp locking design
  - High temperature resistant ("T" marking).
  - Heat and UV blocking shield to prevent degradation of material.
  - Multi-point contact design for optimum lamp pin contact.
  - Produced in accordance with DIN ISO 9001 and IEC standards.

BALLASTS (by others unless specified)
- All standard ballasts are electronic, energy saving, thermally protected, Class-P, non-PCB, Sound Rated "A", 0 degree (Type 1 Outdoor).
- UL/CSA certified, where applicable. Compliant with Federal Ballast Law (Public Law 100-357, 1988).
- Choice of ballast factors. L=Low, N=Normal, H=High.
- Choice of dedicated, universal or special voltage - Consult factory for available options.
- Warranted by ballast manufacturer. Typical ballast warranty is for 5 years (120-277v) and 3-years (347-480v). Consult factory for latest warranty information.

LAMPS (by others unless specified)
- Lamp type, CRI ratings, temperature colors, lamp life ratings are all viable options which can be supplied - Consult factory for information.

ELECTRICAL
- Retrofit Kit components are UL Listed.
- Product includes luminaire disconnect as specified in NEC 410.73(G), 2005 Edition, and CEC part I, rule 30-308(4), 2006 Edition.

QUALITY CONTROL
- All retrofit kits are designed and fabricated at RENOVA's manufacturing facility.

GUARANTEE
- RENOVA warrants all Retrofit Kits to be free of defects in manufacturing and workmanship for a period of (1) year from date of purchase. This warranty excludes damage of any kind resulting from improper installation, misuse, abuse, accidents, mis-application, or natural disasters. Please refer to the "Terms and Conditions" section of the RENOVA website for additional information.

Note: RENOVA products are constantly being improved; therefore, the information shown is subject to change without notice. Always consult your lighting representative or RENOVA Lighting Systems, Inc. for the latest information.

RENOVA Lighting Systems, Inc. 20 Middlesex Road Mansfield, MA 02048 (800) 635-6682 www.renova.com

Category: ECS
Energy Conservation Series

Prefix:
SRK

Retrofit Series (Name):
Strip Retrofit Kit

RENOVA™
Innovative Lighting Ideas
Energy Efficient Solutions

2-Lamp T8 Strip Retrofit Kit Shown

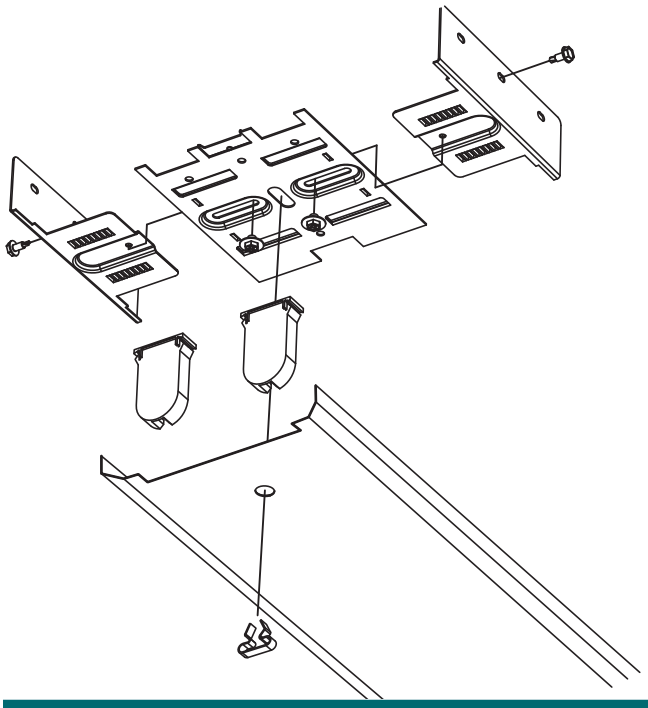

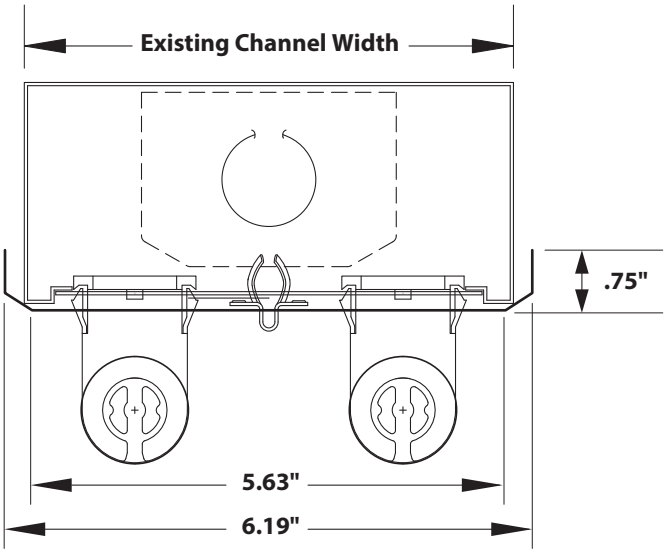

ORDERING GUIDE

SERIES	SIZE	REFLECTOR MATERIAL	NUMBER OF LAMPS	LAMP TYPE	BRACKET TYPE	MAXIMUM BRACKET WIDTH	LAMPHOLDER TYPE	OPTIONS
SRK								

SRK - STRIP RETROFIT KIT

14 - 48"
18 - 96"

M - MIRO4 (95% TR)
W - WHITE (91% TR)

1 - 1L
2 - 2L
3 - 3L
4' KIT

2 - 2L
4 - 4L
6 - 6L
8' KIT

UNV - Universal Fit

B (IS) - Instant Start
B (RS)- Rapid Start

Optional Narrow Ballast Cover Is Available
Add 4.25ADJ to Catalog #

Photometric data, IES files and all other information is available upon request.

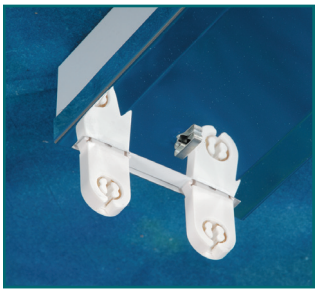

Vossloh Locking Lampholders
(Standard)

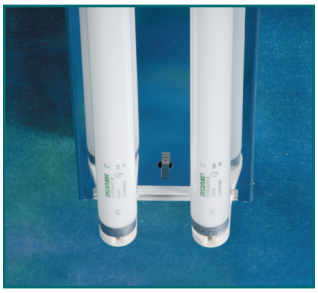

Multi-Faceted Reflector
(Designed for Maximum Efficiency)

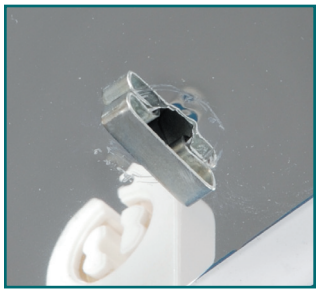

Captive Quarter-Turn Fastener
(Allows Toolless Access to
Ballast Compartment)

Universal Brackets
Designed to Fit Most Channel Widths

Note: RENOVA products are constantly being improved; therefore, the information shown is subject to change without notice. Always consult your lighting representative or RENOVA Lighting Systems, Inc. for the latest information.

RENOVA Lighting Systems, Inc. 20 Middlesex Road Mansfield, MA 02048 (800) 635-6682 www.renova.com