SMOKE ALARM
PHOTOELECTRIC

CAT. **7010B**

OptiPath 360™ Technology

PHOTOELECTRIC
Photoelectric technology is generally more sensitive at detecting large particles, which tend to be produced in greater amounts by smoldering fires.

LATCHING ALARM INDICATOR
Remembers which unit initiated an alarm.

OPTIPATH 360 TECHNOLOGY™
Provides 360 degrees of direct access to the smoke sensing chamber.

SILENCE FEATURE
Silences nuisance alarms.

TWO LOCKING FEATURES
Pins are provided to lock battery drawer and/or alarm to base. Perfect for apartment, dormitory or hotel applications.

LIMITED 10 YEAR WARRANTY

PHOTOELECTRIC

Listed to UL 217 Standard

BRK®
THE PROFESSIONAL STANDARD

120V AC, 60Hz Wire-in with 9V Battery Backup

Description:

The BRK Brands, Inc. model number 7010B is a wire-in, 120V AC 60Hz single and/or multiple station photoelectric smoke alarm specifically designed for residential and institutional applications including sleeping rooms of hospitals, hotels, motels, dormitories and other multi-family dwellings as defined in standard NFPA 101. Model 7010B complies with UL217, CSFM, NFPA 72, HUD, FHA and other agencies that model their codes after the above agencies. It meets building codes where AC/DC with silence photoelectric smoke alarms are required. The alarms are interconnectable with up to 18 devices, of which 12 can be smoke alarms.

The BRK 7010B features a photoelectric smoke sensing chamber, an 85dB horn, a 9V battery back-up and a "silence" feature. Optipath 360 technology provides 360 degrees of direct access to the smoke sensing chamber. Alarm Latch: Easily identifies initiating alarm even after alarm condition has subsided. The "Perfect Mount" system features a gasketless base and a mounting bracket that keeps the alarm secure over a wide rotation range to allow for true alignment. This will allow fine-tuning on the positioning to compensate for out of aligned wall studs and to keep the wording level when wall mounting. Battery installation and removal can occur while the unit is mounted to the ceiling or wall via the side load battery compartment. Other Contractor Preferred features include a dust cover to keep alarm clean during construction, keyhole slots in the mounting bracket eliminate the need to remove the electrical box screws for installation. Two locking features are provided to prevent battery theft and/or theft of the unit. Connection to AC power is made with a "Quick-Connect" wiring harness. Installation is quick, easy and cost effective.

CAT. 7010B

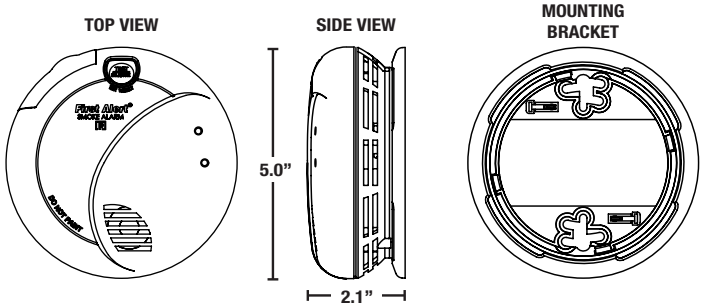

ARCHITECTURAL AND ENGINEERING SPEC

The smoke alarm shall be a BRK Model 7010B and shall provide at a minimum the following features and functions:

1. A photoelectric smoke sensing chamber.
2. The unit shall be capable of self restoring.
3. A fully screened sensing chamber to resist entry of small insects thereby reducing the probability of unwanted alarms.
4. Powered by 120V AC, 60Hz and have a monitored 9V battery backup and a solid state piezo horn rated at 85dB at 10 ft.
5. A visual LED power-on indicator to confirm unit is receiving power or is in alarm.
6. A full function test button. The test button should check all alarm functions by stimulating the chamber to simulate a smoke condition, causing the unit to alarm.
7. Latching & silence features: Alarm Latch to easily identify initiating alarm after alarm condition has subsided. Silence feature - Temporarily silence unwanted nuisance alarms.
8. Two Locking features - tamper resistant locking pins that lock battery drawer and/or alarm to mounting bracket.
9. The unit shall be capable of operating between 40°F (4°C) and 100°F (38°C) and relative humidity between 10% and 95%.
10. The unit shall have a gasketless base for easy installation and be capable of keeping alarm secure over a wide rotation range to allow for true alarm alignment.
11. The unit shall have a plug in connector and be capable of interconnection of up to 18 alarms, 12 of which can be smoke alarms.
12. The unit shall at a minimum meet the requirements of UL217, CSFM, NFPA 72, NFPA 101, ICC.

INSTALLATION OF ALARM

Installation of this smoke alarm must conform to all local electrical codes and Article 760 of the National Electrical Code (NFPA 70) and NFPA 72. Interconnected units must meet the following requirements: Total length of wire interconnecting units should be less than 1000 feet, be #18 gauge or larger and be rated at least 300V. It is recommended that all units be on the same fuse or circuit breaker. If local codes do not permit, be sure the neutral wire is common to both phases.

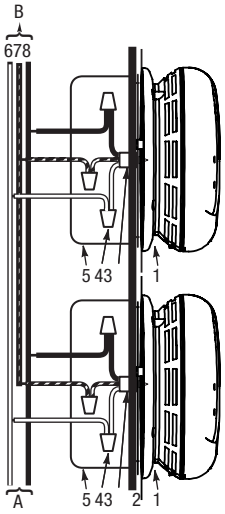

THE PARTS OF THIS ALARM

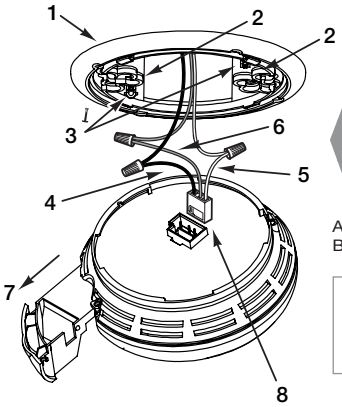

1. Mounting bracket
2. Mounting Slots
3. Locking Pins
4. Hot (Black) AC Wire
5. Nuetral (White) AC Wire
6. Interconnect (Orange) Wire
7. Pull out Battery Drawer
8. Quick-Connect Plug

A. Unswitched 120VAC 60 Hz source
B. To additional units; Maximum = 18 total (Maximum 12 Smoke Alarms)

1. Smoke Alarm
2. Ceiling or Wall
3. Power Connector
4. Wire Nut
5. Junction Box
6. Neutral Wire (White)
7. Interconnect Wire (Orange)
8. Hot Wire (Black)

TECHNICAL SPECS

Alarm Dimensions:	5.0"Dia. x 2.1"H
Weight:	8.4 oz
Operating Voltage:	120V AC 60Hz w/ 9V battery backup
Temperature Range:	40°F (4°C) to 100°F (38°C)
Humidity Range:	10% to 95% relative humidity (RH)
Audio Alarm:	85dB at 10 feet
Test/Silence:	Electronically simulates smoke condition, causing the unit to alarm. Press and hold test/silence button.
Alarm Reset:	Automatic when smoke clears
Interconnections:	Up to 18 units of First Alert or BRK Smoke, CO and Heat Alarms. Maximum of 12 smoke alarms. See user's manual for details.
Smoke Sensor:	Photoelectric
Indicator Lights/Sounds:	
AC Power:	Constant Green LED
DC Power:	Intermittent Red LED
Local Alarm:	Red LED flashes rapidly
Latching Alarm:	Red LED flashes once per second for 3 seconds after local alarm. Pattern repeats approximately every 45 secs.
Remote Alarm:	Audio alarm and Red LED out.
Listing:	Listed to UL217 Standard

SHIPPING SPECS

Individual Carton Dimensions	5.13"L x 2.38"W x 5.13"H
Weight	0.55 lbs.
Cube	0.04 ft3
UPC	0 29054 11201 9
Master Carton Dimensions	10.75"L x 7.88"W x 11.06"H
Master Pack	12
Weight	7.1 lbs.
Cube:	0.54 ft3
I2of5:	100 29054 11201 6
Pallet Information	
Cases per Layer	22
Number of Layers:	4
Cases per Pallet:	88
Units per Pallet:	1,056
Cube:	54.0 ft3
Weight:	678 lbs.

BRK® THE PROFESSIONAL STANDARD
brkelectronics.com

©2015 BRK Brands, Inc. a Jarden Corporation Company (NYSE: JAH)
3901 Liberty Street Road
Aurora, IL 60504-8122
All rights reserved

First Alert is a registered trademark of the First Alert Trust
BRK is a registered trademark of BRK Brands, Inc.
CM3250