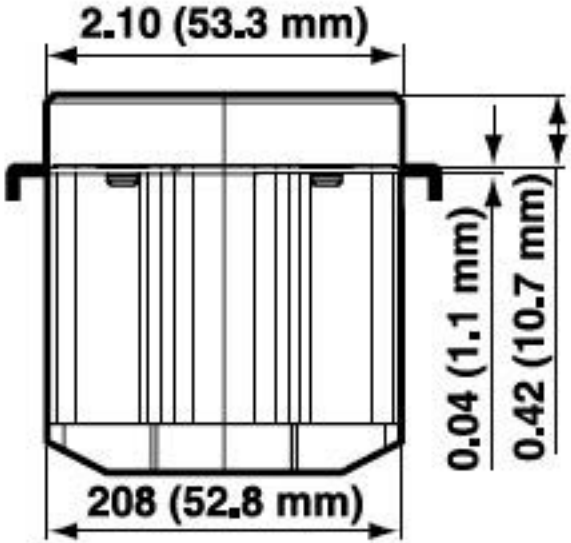
2.10 (53.3 mm)
0.04 (1.1 mm)
0.42 (10.7 mm)
208 (52.8 mm)

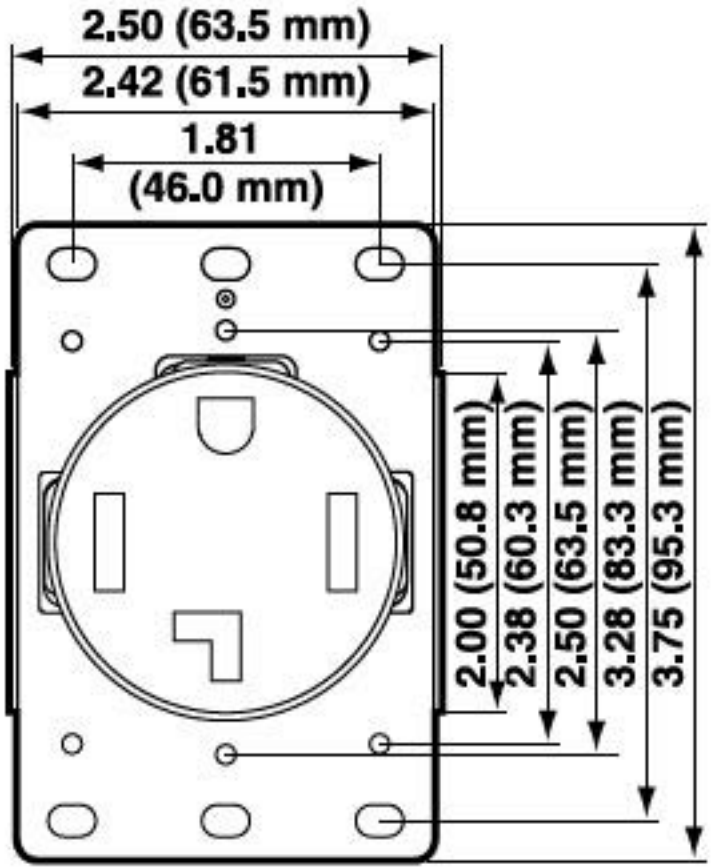
2.50 (63.5 mm)
2.42 (61.5 mm)
1.81
(46.0 mm)
2.00 (50.8 mm)
2.38 (60.3 mm)
2.50 (63.5 mm)
3.28 (83.3 mm)
3.75 (95.3 mm)