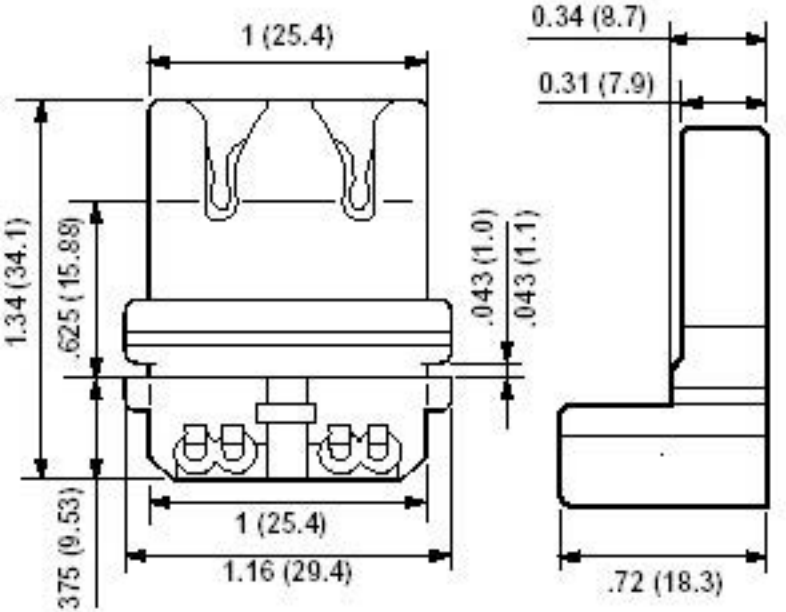
1 (25.4)
0.34 (8.7)
0.31 (7.9)
1.34 (34.1)
.625 (15.88)
.043 (1.0)
.043 (1.1)
1 (25.4)
1.16 (29.4)
.375 (9.53)
.72 (18.3)