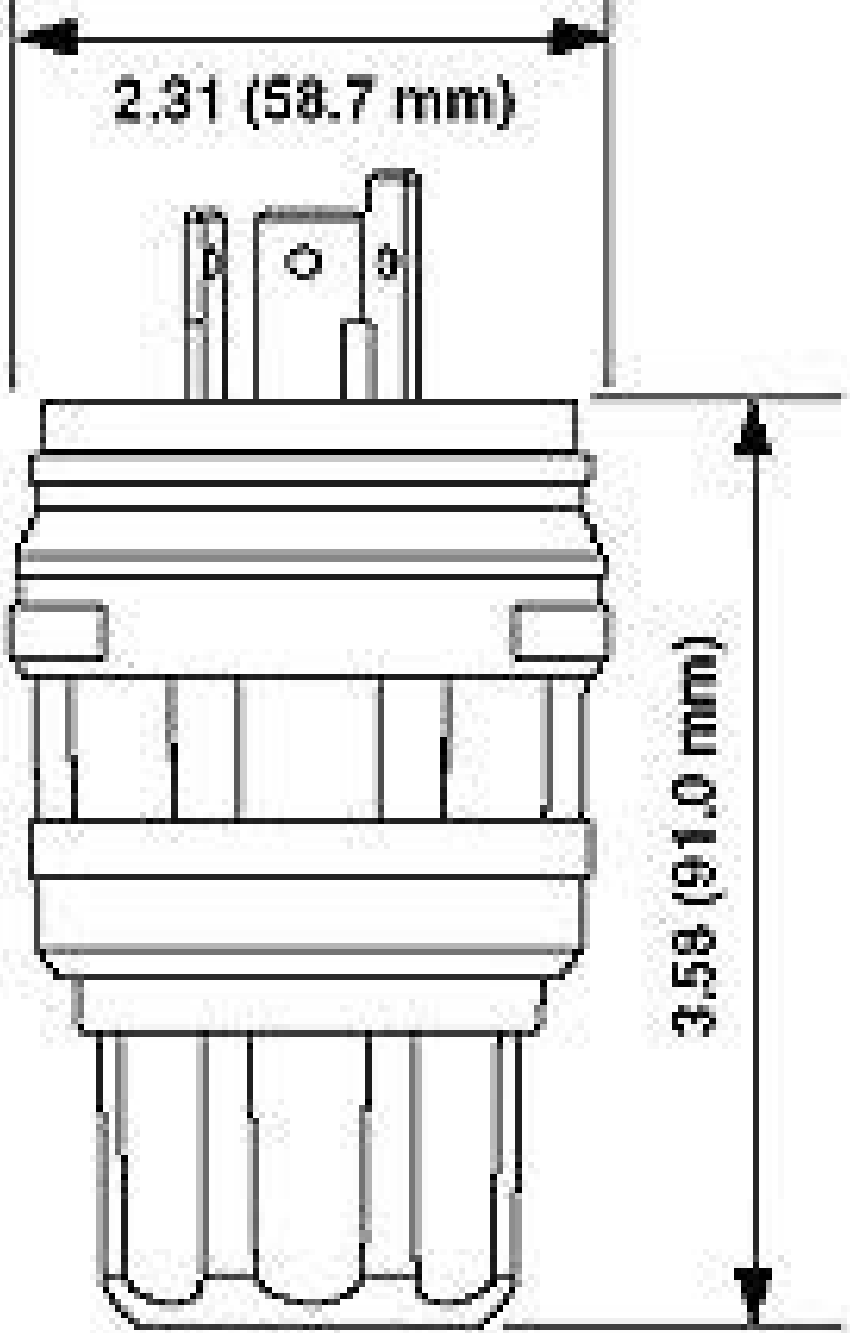Dimensional Diagram