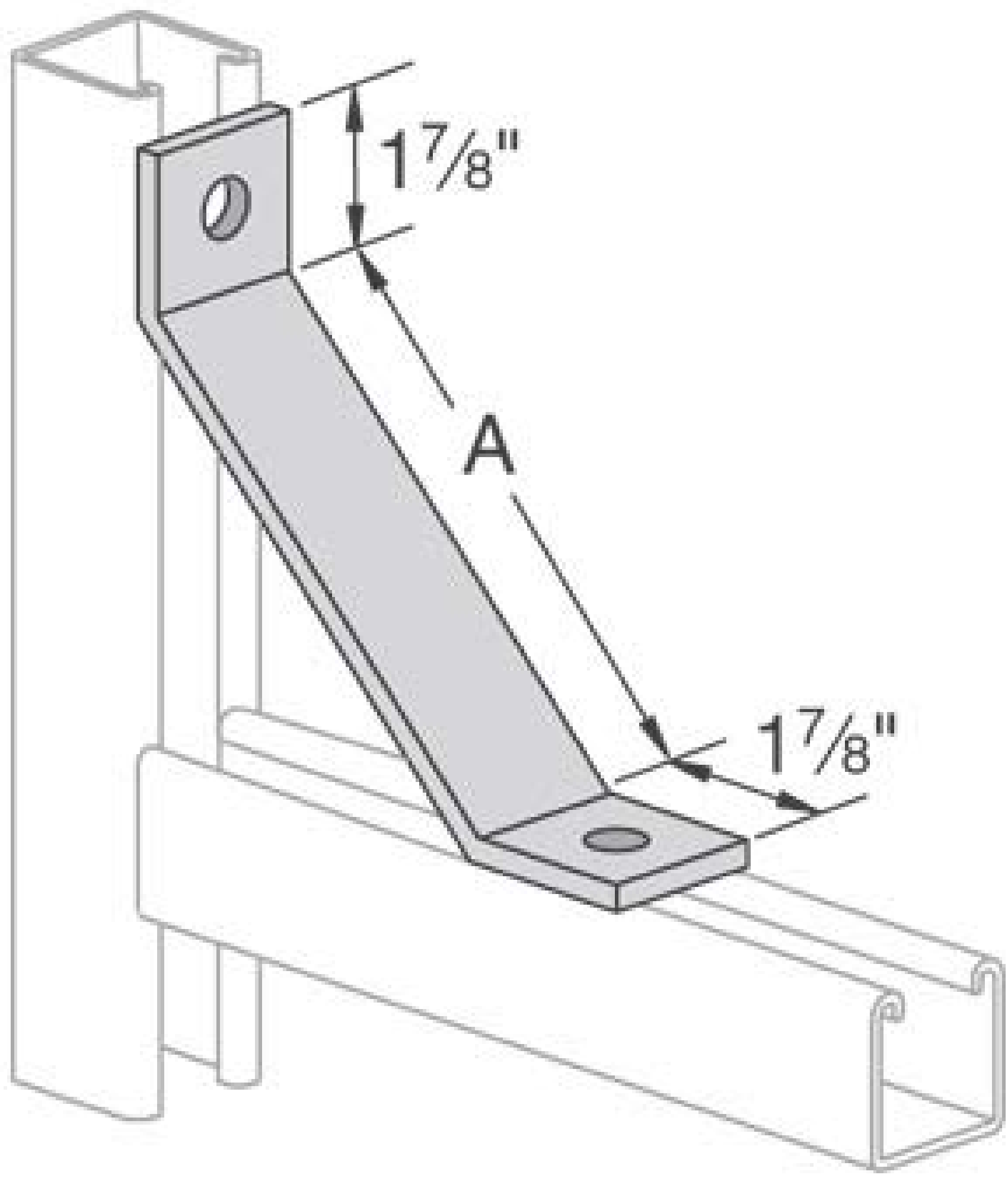
1 7/8"
A
1 7/8"