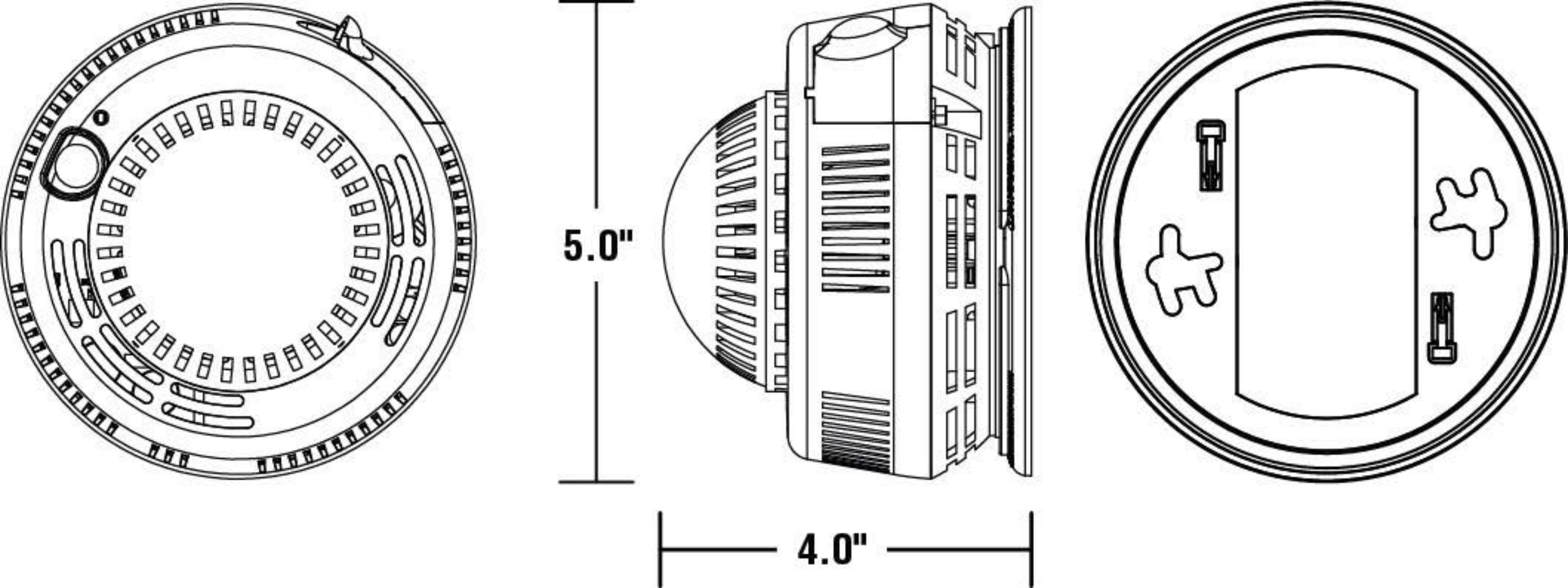
5.0"
4.0"