DRAWING NO. SC091657-01

| REV | DATE | DESCRIPTION | ECO | BY | C'H'K. |
|---|---|---|---|---|---|
| H | 06/23/2016 00:00:00 AM | ADD NOTE 10 | 47461 | SM | MB |

| COPPER CONDUCTOR ACCOMMODATED | | CAT. NO. (5) (7) (9) (10) | H (3) | J DIA. | L | W | T (3) | TORQUE | |
|---|---|---|---|---|---|---|---|---|---|
| AWG | METRIC WIRE SIZE | | | | | | | Lb*in | N*m |
| 8 SOL(.129 DIA.) - 4 STR(.232 DIA.) | [10mm² SOL(3.58)- 16mm² STR(5.13)] | GB4C | 1.49 [38] | 3/8-16 | .88 [22] | 1.06 [27] | 1/4" | 240 | 27.0 |
| 4 SOL(.204 DIA.)- 2/0 STR(.418 DIA.) | [25mm² STR(6.48)- 70mm² STR(10.9)] | GB26 | 1.74 [44] | 3/8-16 | .94 [24] | 1.42 [36] | | | |
| 2/0 SOL(.365 DIA.)- 250 KCMIL(.575 DIA.) | [70mm² STR(10.9)- 120mm² STR(14.4)] | GB29 | 2.32 [59] | 1/2-13 | 1.25 [32] | 1.88 [48] | | 480 | 54.1 |
| 2/0 SOL(.365 DIA.)- 250 KCMIL(.575 DIA.) | [70mm² STR(10.9)- 120mm² STR(14.4)] | GB29TNGSHDWR (6) | 2.32 [59] | 1/2-13 | 1.25 [32] | 1.88 [48] | | | |
| 300 KCMIL(.630 DIA.)- 500 KCMIL(.814 DIA.) | [150mm² STR(16.0)- 240mm² STR(20.3)] | GB34 | 2.57 [65] | 1/2-13 | 1.38 [35] | 2.31 [59] | | | |
| 550 KCMIL(.855 DIA.)- 750 KCMIL(.998 DIA.) | [300mm² STR(22.6)- [300mm² STR(22.6) | GB39 | 3.28 [83] | 5/8-11 | 1.75 [45] | 2.75 [70] | | 660 | 75 |
| 800 KCMIL(1.031 DIA.)- 1000 KCMIL(1.152 DIA.) | [400mm² STR(26.1)- 500mm² STR(28.3)] | GB44 | 3.28 [83] | 5/8-11 | 1.75 [45] | 3.16 [80] | | 660 | 75 |

TABLE A

TABLE B

| SUFFIX (T) | T | H ADJUST |
|---|---|---|
| T2 | .25 | 0.00 |
| T4 | .50 | 0.25 |
| T6 | 0.75 | 0.50 |
| T8 | 1.00 | 0.75 |
| T10 | 1.25 | 1.00 |

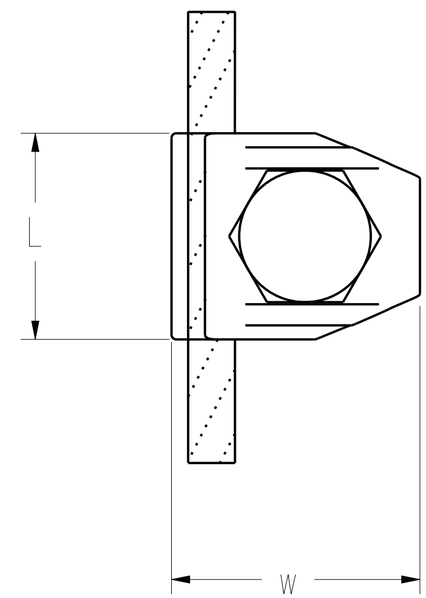


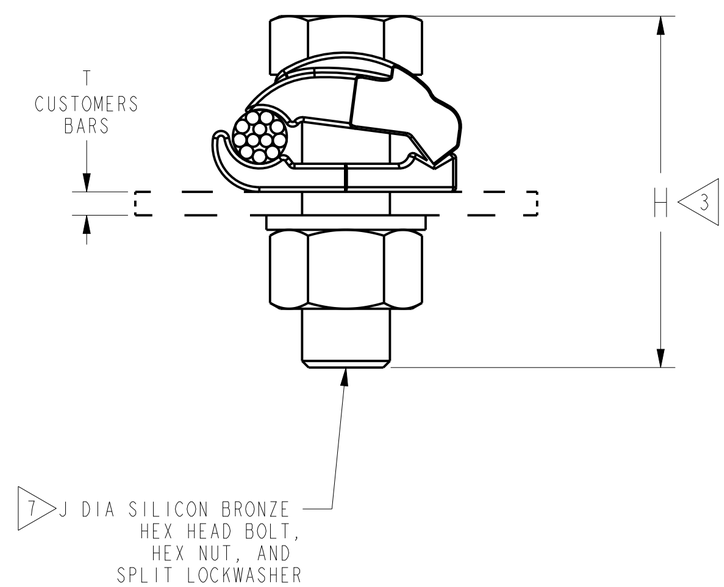


NOTES:

1. MATERIAL: CAST COPPER ALLOY.
2. DIMENSIONS IN BRACKETS [ ] ARE IN MILLIMETERS ROUNDED OFF TO THE NEAREST MILLIMETER, UNLESS OTHERWISE NOTED, AND ARE FOR REFERENCE ONLY.
3. FOR BAR THICKNESS FROM 1/4" TO 1 1/4" ADD THE SUFFIX "T" FROM TABLE B TO THE CATALOG NUMBER.
4. (4) T2 SHOWN IN TABLE FOR REFERENCE ONLY, T2 NOT TO BE INCLUDED IN CATALOG NUMBER.
5. (5) FOR TIN PLATED PRODUCT ADD A "W" TO THE END OF THE CATALOG NUMBER (EXGB34W OR GB34T6W)
6. (6) CAP & BODY FINISH TO BE TIN PLATED HARDWARE FINISH TO BE GALVANIZED STEEL. NOT UL LISTED.
7. (7) CATALOG NUMBERS WITH A "GS" SUFFIX HAVE GALVANIZED HARDWARE.
8. UL 467 LISTED, FILE NO. E9999. ACCEPTABLE FOR DIRECT BURIAL IN EARTH OR CONCRETE, CSA 22.2 NO. 65 LISTED, FILE NO. 42862.
9. (9) FOR TIN PLATED PRODUCT AND HARDWARE ADD A "TN" TO THE END OF THE CATALOG NUMBER
10. (10) SUFFIX CB1 INDICATES BOX QTY 100


TO ORDER BURNDY® PRODUCTS CALL

UNITED STATES:
1-800-346-4175 (LONDONDERRY, NH)

CANADA:
1-800-361-6975 (QUEBEC)
1-800-387-6487 (ALL OTHER PROVINCES)

FOR PRODUCT INFO: http://www.burndy.com


GROUND CONNECTOR

ITEM NO: N/A

CAT. NO: GB--(TABLE)

| | | |
|---|---|---|
| DRAWN BY: | HC | 09/17/85 |
| CHECKER: | CAR | 09/25/85 |
| DSN APPVL: | H GOMES | 09/14/17 |
| MFG APPVL: | P MARTEL | 09/15/17 |
| QA APPVL: | C. LINDQUIST | 09/19/17 |
| MKT APPVL: | K. WOO | 11/11/93 |

BURNDY

SCALE: 2:1

PROD FAM: --

PROJECT #: --

DOCUMENT TYPE: Sales

REL LEVEL: Released

SIZE: C

DRAWING NO: SC091657-01

REV: H

SHEET 1 OF 1

REV: PE0200