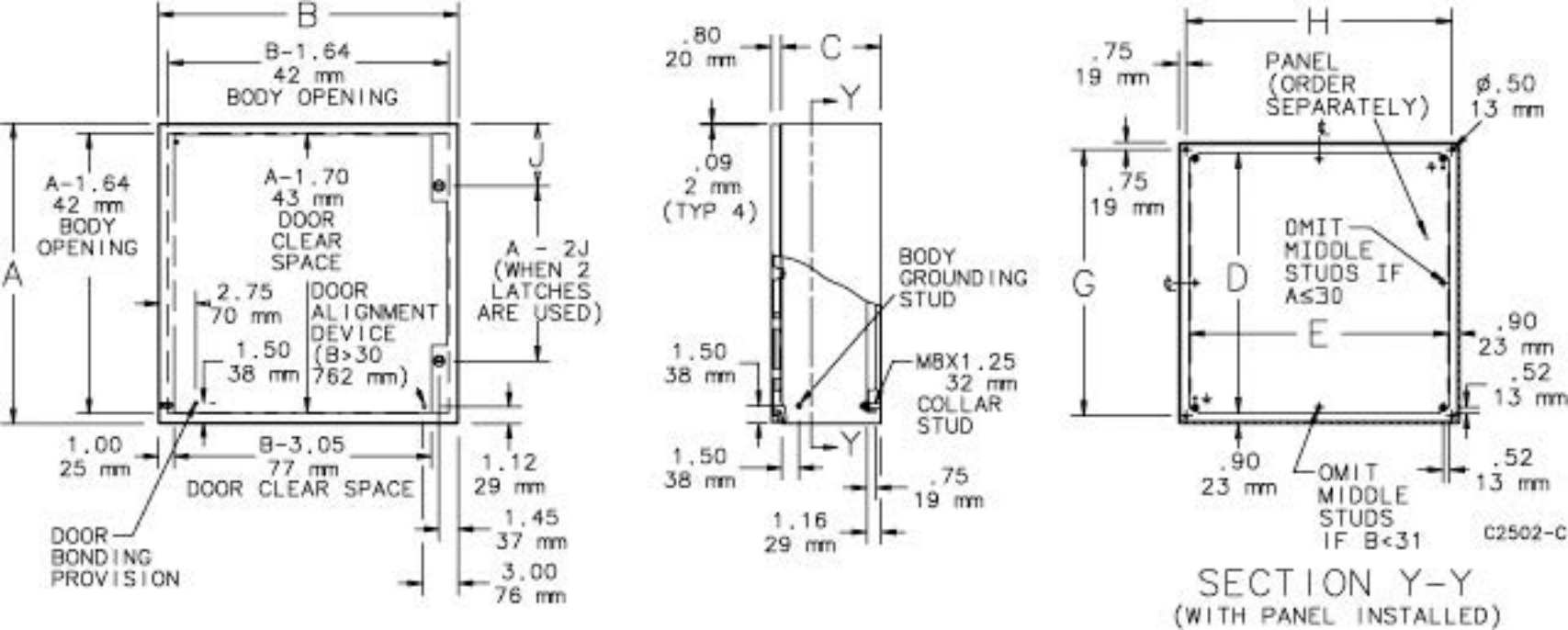
B
B-1.64
42 mm
BODY OPENING
A-1.64
42 mm
BODY
OPENING
A
A-1.70
43 mm
DOOR
CLEAR
SPACE
J
A - 2J
(WHEN 2
LATCHES
ARE USED)
2.75
70 mm
DOOR
ALIGNMENT
DEVICE
(B>30
762 mm)
1.50
38 mm
1.00
25 mm
B-3.05
77 mm
DOOR CLEAR SPACE
1.12
29 mm
1.45
37 mm
3.00
76 mm
DOOR
BONDING
PROVISION
.80
20 mm
C
Y
.09
2 mm
(TYP 4)
BODY
GROUNDING
STUD
1.50
38 mm
M8X1.25
32 mm
COLLAR
STUD
Y
1.50
38 mm
.75
19 mm
1.16
29 mm
H
.75
19 mm
PANEL
(ORDER
SEPARATELY)
ø.50
13 mm
.75
19 mm
OMIT
MIDDLE
STUDS IF
A≤30
G
D
E
.90
23 mm
.52
13 mm
.90
23 mm
OMIT
MIDDLE
STUDS
IF B<31
.52
13 mm
C2502-C
SECTION Y-Y
(WITH PANEL INSTALLED)