PART No. EJ12124SS

for more information visit

www.hammfg.com

Data subject to change without notice

Isometric drawing Not to Scale

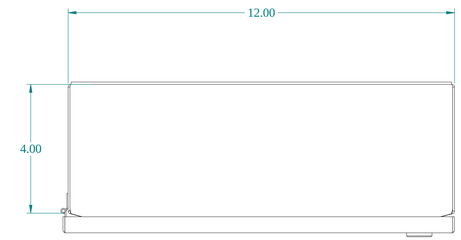

TOP VIEW

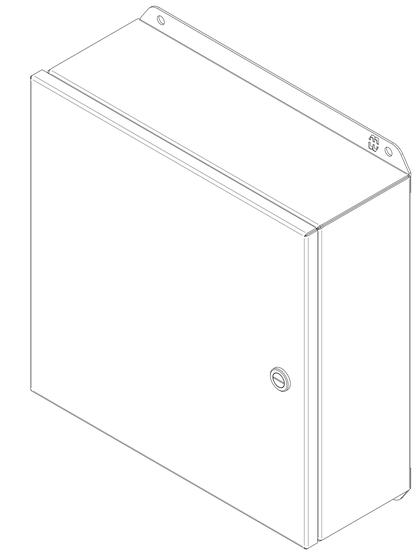

ISOMETRIC VIEW

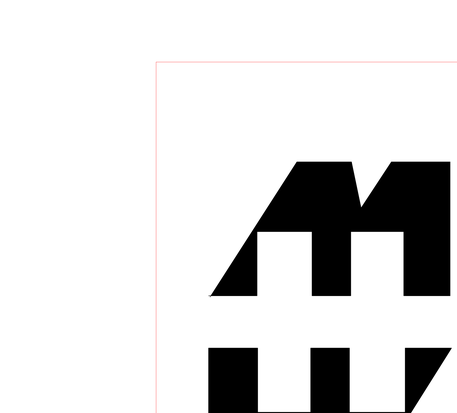

INNER PANEL

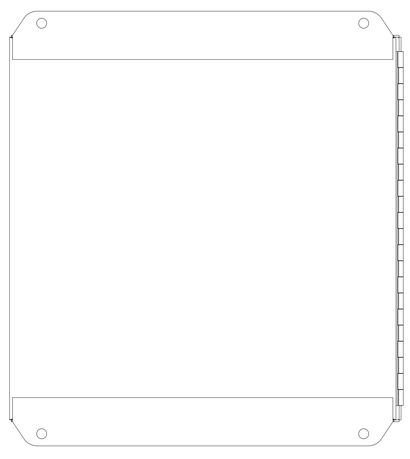

BACK VIEW

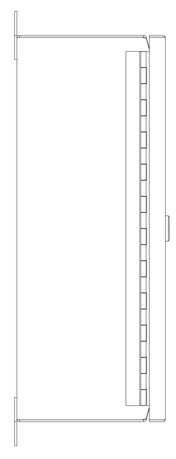

SIDE VIEW

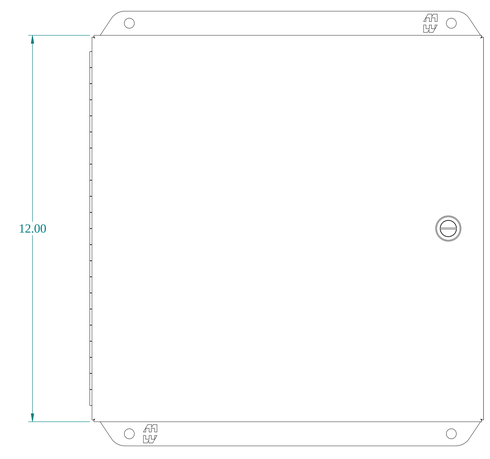

FRONT VIEW

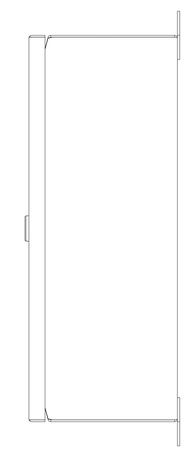

SIDE VIEW

BOTTOM VIEW