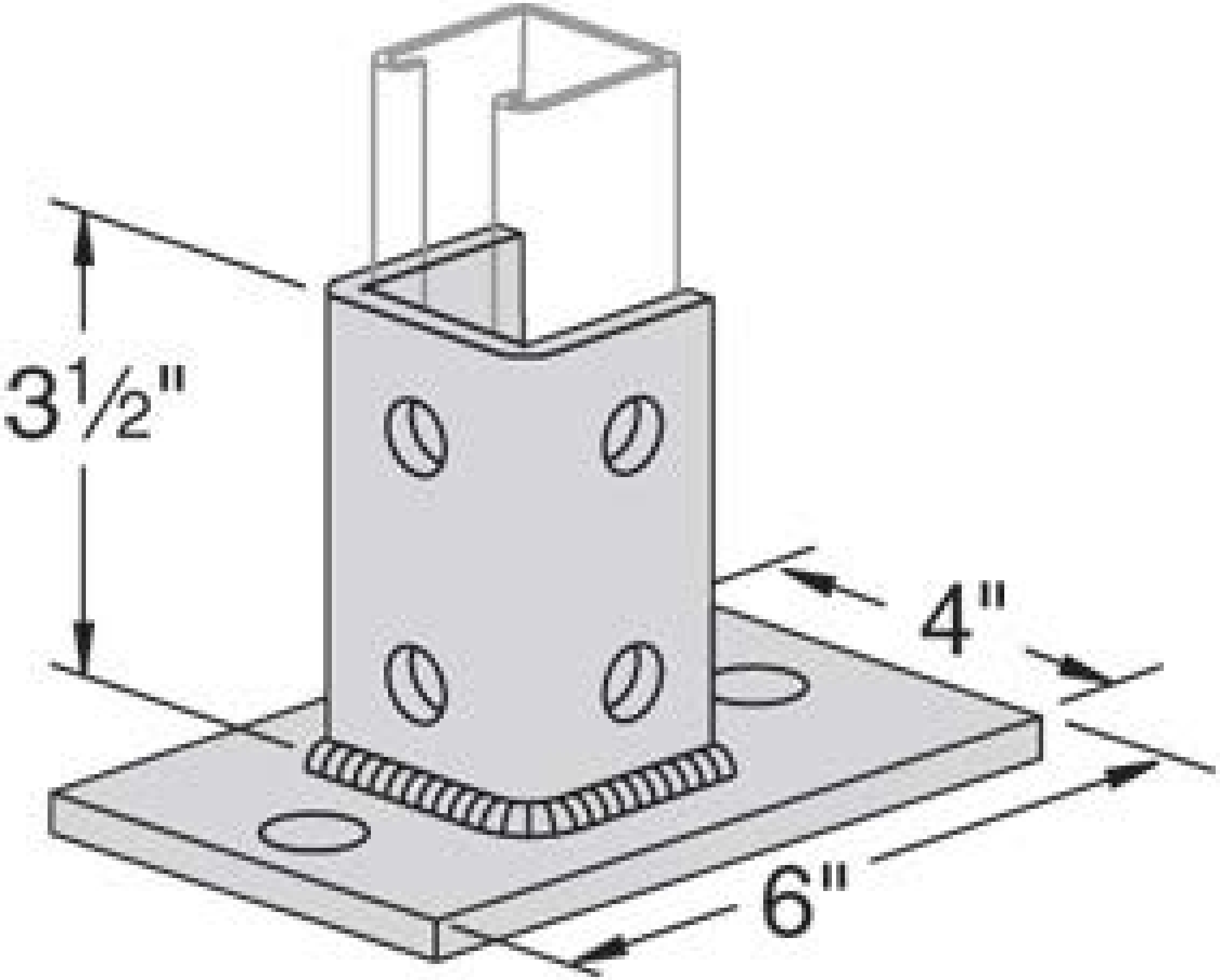
3½"
4"
6"