DRAWING NO.
SD073935

REV	DATE	DESCRIPTION	ECO	BY	C'H'K.
BA	2019-08-13 00:00:00 EDT	UPDATED AS PER MARKUP	51953	YR	SS

CATALOG NUMBER ◁3 ◁6	CONDUCTOR SIZE		CONNECTOR DIMENSIONS-LINEAR MEASURE IN,[mm] ◁5										INFORMATION
	ALUMINUM	COPPER	STUD SIZE	NO.OF. HOLES	B	C	D	Ø K	L	N	O.D	(T)	PLATING
YA8CA1	8 AWG CLASS B CONCENTRIC COMPRESSED COMPACT SIW	8 AWG CLASS B,C CONCENTRIC COMPRESSED COMPACT	10	1	.62 [16]	.53 [13]	.60 [15]	.20 [5]	1.50 [38]	.20 [5]	.30 [8]	.09 [2]	TIN ◁3
YA8CA2													NONE
YA8CA3			1/4		.62 [16]	.53 [13]	.75 [19]	.28 [7]	1.65 [42]	.25 [6]		.09 [2]	TIN ◁3
YA8CA4													NONE

COLOR CODE	DIE INFORMATION		BURNDY® INSTALLATION TOOLING (#CRIMPS)								DIELESS (#CRIMPS)		STRIP LENGTH
			MECHANICAL		HYDRAULIC								
	DIE INDEX	TYPE	OUR840	MD6	◁10 Y34A ◁9 Y34B	◁9 Y35,Y39 Y750 PAT750	◁9 ◁8 Y46	◁9 ◁7 Y45	Y48BH	Y60	MECHANICAL	HYDRAULIC	
BLUE	374	BLUE DIE SET	X8CART (2)	X8CART (2) W374 (1)	--	U8CABT (1)	U8CABT (1)	U8CABT (1)	--	--	MRC840AL (1) MY29-3 (1)	Y81KFT (1) PAT81KFT (1)	3/4"
		NEST INDENTOR	--	--	--	--	--	--	--	--			

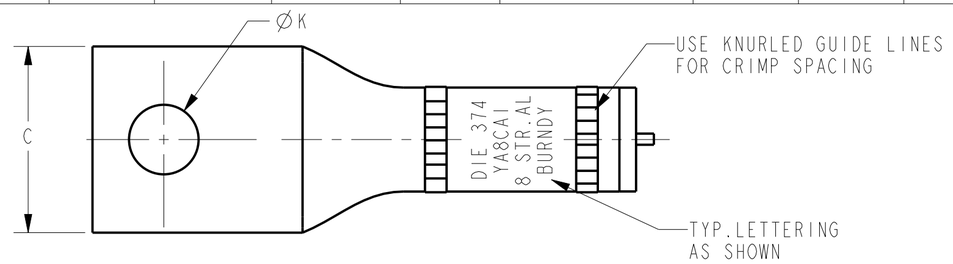

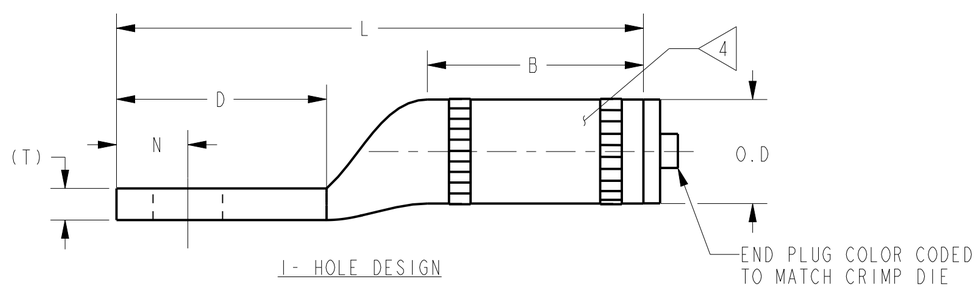

NOTES:

1- HOLE DESIGN

1. ALL HYLUGS™ ACCOMMODATE U.S. STANDARD WASHERS.

2. REMOVE ALL EXCESS PENETROX™ FROM CONNECTOR AND ADJACENT CONDUCTOR PRIOR TO TAPING.

3 ▷ UL LISTED AND CSA CERTIFIED WIRE CONNECTORS. RATED 75 C (AL7CU) FOR USE WITH COPPER OR ALUMINUM CONDUCTOR. APPROVAL APPLY TO TIN PLATED CONNECTORS ONLY.

4 ▷ CONNECTOR BARRELS PREFILLED WITH PENETROX™

5 ▷ DIMENSIONS IN BRACKETS [ ] ARE IN MILLIMETERS ROUNDED OFF TO THE NEAREST MILLIMETER , UNLESS OTHERWISE NOTED,AND ARE FOR REFERENCE ONLY.

6 ▷ ADD SUFFIX "DT" TO ORDER LUGS WITH CRIMP BARREL SEALED AIR TIGHT INSIDE THE TRANSITION.

7 ▷ CATALOG #PT6515 ADAPTOR IS REQUIRED TO USE "U" DIES IN Y45 SERIES TOOLS.

8 ▷ CATALOG #PUADP-1 ADAPTOR IS REQUIRED TO USE "U" DIES IN Y46 SERIES TOOLS.

9 ▷ Y35P3 INDENTOR ADAPTOR REQUIRED FOR "Y34PR" TYPE INDENTORS.

10 ▷ FOR USE BY CUSTOMERS THAT HAVE THIS HYPRESS™ . NO NEW HYPRESSES™ ARE BEING PROCESSED.

11 ADD SUFFIX "U" TO ORDER LUGS WITH UNDRILLED TONGUE.

UNINSULATED COMPRESSION TERMINAL
MATERIAL: ALUMINUM TUBE

TO ORDER BURNDY® PRODUCTS CALL

UNITED STATES:
1-800-346-4175 (LONDONDERRY, NH)

CANADA:
1-800-361-6975 (QUEBEC)
1-800-387-6487 (ALL OTHER PROVINCES)

FOR PRODUCT INFO: http://www.burndy.com

HYLUG™

ITEM NO: NA

CAT. NO: YA8CA-(SEE TABLE)

DRAWN BY:	E.S.K	7/19/72
CHECKER:	S.F.P	8/01/72
DSN APPVL:	R.B	8/02/72
MFG APPVL:	--	--
QA APPVL:	D.VARIO	6/19/95
MKT APPVL:	P.WERTHMAN	6/19/95

BURNDY

SCALE: 2:1

PROD FAM:	CM&R COMPRESSION	DRAWING NO	REV
PROJECT #:	--	SIZE	SD073935	BA
DOCUMENT TYPE:	Sales	C	
REL LEVEL:	Released		SHEET 1 OF 24

REV: PE0200

DRAWING NO.
SD073935

REV	DATE	DESCRIPTION	ECO	BY	C'H'K.
BA	2019-08-13 00:00:00 EDT	UPDATED LETTERING VIEW FOR YA6CA1 & YA6CA3	51953	NG	DD

CATALOG NUMBER 3 6	CONDUCTOR SIZE		CONNECTOR DIMENSIONS-LINEAR MEASURE IN,[mm] 5										INFORMATION	BARREL LETTERING INFORMATION 12
	ALUMINUM	COPPER	STUD SIZE	NO.OF. HOLES	B	C	D	Ø K	L	N	O.D	(T)	PLATING	
YA6CA1	6 AWG CLASS B CONCENTRIC COMPRESSED COMPACT SIW	6 AWG CLASS B,C CONCENTRIC COMPRESSED COMPACT	1/4	1	.75 [19]	.47 [12]	.75 [19]	.28 [7]	1.84 [47]	.33 [8]	.34 [9]	.14 [4]	TIN 3	FIG. 2
YA6CA2													NONE	FIG. 1
YA6CA3			3/8		.75 [19]	.65 [17]	1.19 [30]	.44 [11]	2.28 [58]	.44 [11]		.09 [2]	TIN 3	FIG. 2
YA6CA4													NONE	FIG. 1

COLOR CODE	DIE INFORMATION		BURNDY® INSTALLATION TOOLING (#CRIMPS)								DIELESS (#CRIMPS)		STRIP LENGTH
			MECHANICAL		HYDRAULIC								
	DIE INDEX	TYPE	OUR840	MD6	10 9 Y34A Y34B	9 Y35,Y39 Y750, PAT750	9 8 Y46	9 7 Y45	Y48BH	Y60	MECHANICAL	HYDRAULIC	
GRAY	346 161	GRAY DIE SET	X6CART (2) X161 (2)	X6CART (2) W161 (1)	A6CAB (1)	U6CABT (1) U161 (1)	U6CABT (1) U161 (1)	U6CABT (1) U161 (1)	--	--	MRC840AL (1) MY29-3 (1)	Y81KFT (1) PAT81KFT (1) Y644 (1) PAT644 (1)	7/8"
	346	NEST INDENTOR	--	--	A4CD(1) B1CD(1) Y34PA	--	--	--	--	--			

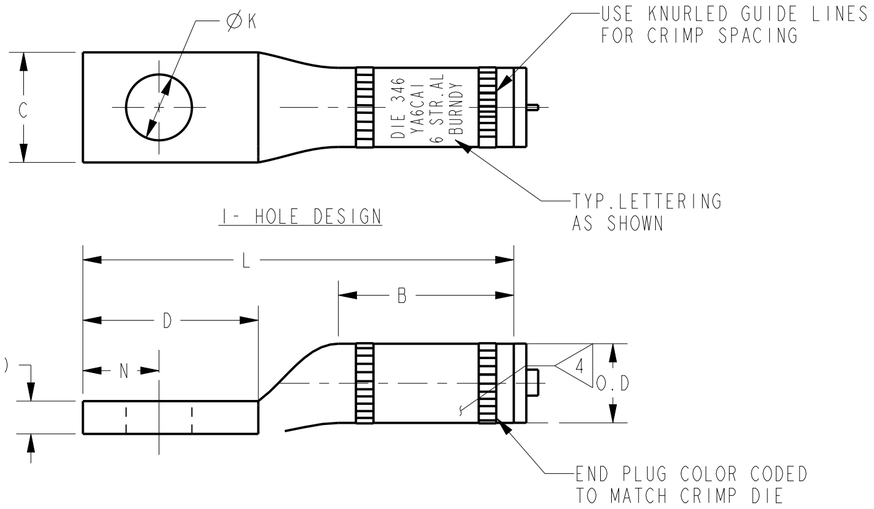

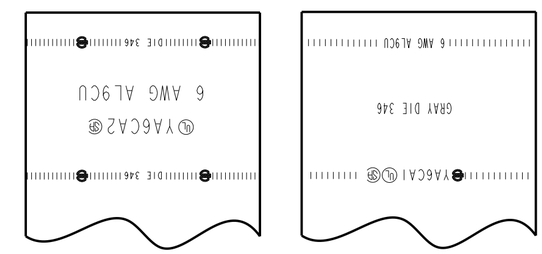

FIG. 1 FIG. 2

BARREL LETTERING VIEW 12

NOTES:

1. ALL HYLUGS™ ACCOMMODATE U.S. STANDARD WASHERS

2. REMOVE ALL EXCESS PENETROX™ FROM CONNECTOR AND ADJACENT CONDUCTOR PRIOR TO TAPING.

3. UL LISTED AND CSA CERTIFIED WIRE CONNECTORS. RATED 90 C (AL9CU) FOR USE WITH COPPER OR ALUMINUM CONDUCTOR. APPROVAL APPLY TO TIN PLATED CONNECTORS ONLY.

4. CONNECTOR BARRELS PREFILLED WITH PENETROX™

5. DIMENSIONS IN BRACKETS [ ] ARE IN MILLIMETERS ROUNDED OFF TO THE NEAREST MILLIMETER , UNLESS OTHERWISE NOTED,AND ARE FOR REFERENCE ONLY.

6. ADD SUFFIX "DT" TO ORDER LUGS WITH CRIMP BARREL SEALED AIR TIGHT INSIDE THE TRANSITION.

7. CATALOG #PT6515 ADAPTOR IS REQUIRED TO USE "U" DIES IN Y45 SERIES TOOLS.

8. CATALOG #PUADP-1 ADAPTOR IS REQUIRED TO USE "U" DIES IN Y46 SERIES TOOLS.

9. Y35P3 INDENTOR ADAPTOR REQUIRED FOR "Y34PR" TYPE INDENTORS.

10. FOR USE BY CUSTOMERS THAT HAVE THIS HYPRESS™ .NO NEW HYPRESSES™ ARE BEING PROCESSED.

11. ADD SUFFIX "U" TO ORDER LUGS WITH UNDRILLED TONGUE.

12. ENLARGED BARREL MARKING VIEW.

UNINSULATED COMPRESSION TERMINAL
MATERIAL: ALUMINUM TUBE

TO ORDER BURNDY® PRODUCTS CALL

UNITED STATES:
1-800-346-4175 (LONDONDERRY, NH)

CANADA:
1-800-361-6975 (QUEBEC)
1-800-387-6487 (ALL OTHER PROVINCES)

FOR PRODUCT INFO: http://www.burndy.com

HYLUG™

ITEM NO: NA

CAT. NO: YA6CA-(SEE TABLE)

DRAWN BY:	E.S.K	7/19/72
CHECKER:	S.F.P	8/01/72
DSN APPVL:	R.B	8/02/72
MFG APPVL:	--	--
QA APPVL:	D.VARIO	6/19/95
MKT APPVL:	P.WERTHMAN	6/19/95
PROD FAM:	CM&R COMPRESSION	
PROJECT #:	--	
DOCUMENT TYPE:	Sales	
REL LEVEL:	Released	

SIZE: C

BURNDY

SCALE: 2:1

DRAWING NO: SD073935

REV: BA

SHEET 2 OF 24

REV: PE0200

DRAWING NO. SD073935

REV	DATE	DESCRIPTION	ECO	BY	C'H'K.
BA	2019-08-13 00:00:00 EDT	UPDATED AS PER MARKUP	51953	YR	SS

CATALOG NUMBER <3> <6>	CONDUCTOR SIZE		CONNECTOR DIMENSIONS-LINEAR MEASURE IN,[mm] <5>											INFORMATION	BARREL LETTERING INFORMATION <12>
	ALUMINUM	COPPER	STUD SIZE	NO.OF. HOLES	B	C	D	E	Ø K	L	N	O.D	(T)	PLATING	
YA4CA1	4 AWG CLASS B CONCENTRIC COMPRESSED COMPACT SIW	4 AWG CLASS B,C CONCENTRIC COMPRESSED COMPACT	1/4	1	.88 [22]	.47 [12]	.75 [19]	--	.28 [7]	2.13 [54]	.33 [8]	.43 [11]	.18 [5]	TIN <3>	FIG. 2
YA4CA2														NONE	FIG. 1
YA4CA3			5/16		.88 [22]	.80 [20]	.87 [22]	--	.38 [10]	2.25 [57]	.41 [10]		.12 [3]	TIN <3>	FIG. 2
YA4CA4														NONE	FIG. 1
YA4CA5			--		.88 [22]	.80 [20]	.75 [19]	--	.25 [6]	2.13 [54]	.33 [8]		.12 [3]	TIN <3>	FIG. 1
YA4CA6			3/8		.88 [22]	.80 [20]	.94 [24]	--	.44 [11]	2.32 [59]	.44 [11]		.12 [3]	TIN <3>	FIG. 2
YA4CA8			1/2	2	.88 [22]	.88 [22]	3.11 [79]	1.75 [44]	.56 [14]	4.50 [114]	.63 [16]		.11 [3]	TIN <3>	FIG. 2

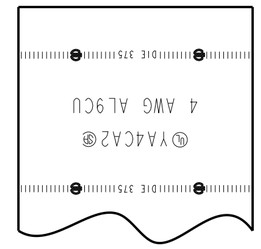

FIG. 1

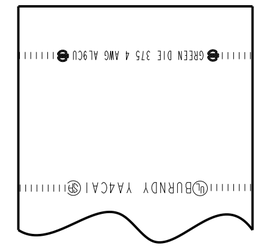

FIG. 2

BARREL LETTERING VIEW <12>

COLOR CODE	DIE INFORMATION		BURNDY® INSTALLATION TOOLING (#CRIMPS)								DIELESS (#CRIMPS)		STRIP LENGTH
			MECHANICAL		HYDRAULIC								
	DIE INDEX	TYPE	OUR840	MD6	<10> Y34A <9> Y34B	<9> Y35,Y39 Y750 PAT750	<9> <8> Y46	<9> <7> Y45	Y48BH	Y60	MECHANICAL	HYDRAULIC	
GREEN	375 I62	GREEN DIE SET	X4CART (3)	X4CART (3) WI62 (3)	A4CAB (1)	U4CABT (1) UI62 (1)	U4CABT (1) UI62 (1)	U4CABT (1) UI62 (1)	--	--	MRC840AL (2) MY29-3 (1)	Y81KFT (1) PAT81KFT (1) Y644 (1) PAT644 (1) Y444 (1) PAT444 (1)	1"
	375	NEST INDENTOR	--	--	AICD(1) BICD(1) Y34PA	--	--	--	--	--			

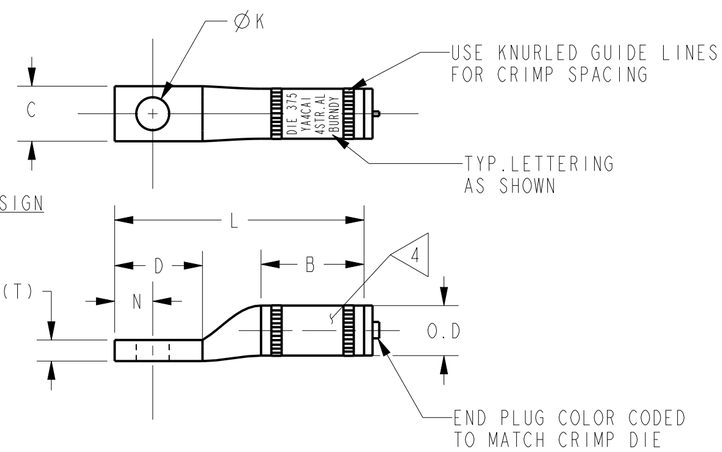

1- HOLE DESIGN

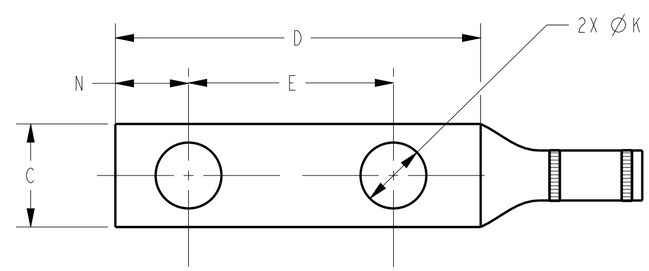

2- HOLE DESIGN

NOTES:

1. ALL HYLUGS™ ACCOMMODATE U.S. STANDARD WASHERS

2. REMOVE ALL EXCESS PENETROX™ FROM CONNECTOR AND ADJACENT CONDUCTOR PRIOR TO TAPING.

<3> UL LISTED AND CSA CERTIFIED WIRE CONNECTORS. RATED 90 C (AL9CU) FOR USE WITH COPPER OR ALUMINUM CONDUCTOR. APPROVAL APPLY TO TIN PLATED CONNECTORS ONLY.

<4> CONNECTOR BARRELS PREFILLED WITH PENETROX™

<5> DIMENSIONS IN BRACKETS [ ] ARE IN MILLIMETERS ROUNDED OFF TO THE NEAREST MILLIMETER , UNLESS OTHERWISE NOTED,AND ARE FOR REFERENCE ONLY.

<6> ADD SUFFIX "DT" TO ORDER LUGS WITH CRIMP BARREL SEALED AIR TIGHT INSIDE THE TRANSITION.

<7> CATALOG #PT6515 ADAPTOR IS REQUIRED TO USE "U" DIES IN Y45 SERIES TOOLS.

<8> CATALOG #PUADP-1 ADAPTOR IS REQUIRED TO USE "U" DIES IN Y46 SERIES TOOLS.

<9> Y35P3 INDENTOR ADAPTOR REQUIRED FOR "Y34PR" TYPE INDENTORS.

<10> FOR USE BY CUSTOMERS THAT HAVE THIS HYPRESS™ .NO NEW HYPRESSES™ ARE BEING PROCESSED.

11 ADD SUFFIX "U" TO ORDER LUGS WITH UNDRILLED TONGUE.

<12> ENLARGED BARREL MARKING VIEW.

UNINSULATED COMPRESSION TERMINAL
MATERIAL: ALUMINUM TUBE

TO ORDER BURNDY® PRODUCTS CALL

UNITED STATES:
1-800-346-4175 (LONDONDERRY, NH)

CANADA:
1-800-361-6975 (QUEBEC)
1-800-387-6487 (ALL OTHER PROVINCES)

FOR PRODUCT INFO: http://www.burndy.com

HYLUG™

ITEM NO: NA

CAT. NO: YA4CA-(SEE TABLE)

DRAWN BY:	E.S.K	7/19/72
CHECKER:	S.F.P	8/01/72
DSN APPVL:	R.B	8/02/72
MFG APPVL:	--	--
QA APPVL:	D.VARIO	6/19/95
MKT APPVL:	P.WERTHMAN	6/19/95
PROD FAM:	CM&R COMPRESSION	
PROJECT #:	--	
DOCUMENT TYPE:	Sales	
REL LEVEL:	Released	

SIZE: C

BURNDY

SCALE: 2:1

DRAWING NO: SD073935

REV: BA

SHEET 3 OF 24

REV: PE0200

DRAWING NO. SD073935

REV	DATE	DESCRIPTION	ECO	BY	C'H'K.
BA	2019-08-13 00:00:00 EDT	UPDATED AS PER MARKUP	51953	YR	SS

CATALOG NUMBER <3> <6>	CONDUCTOR SIZE		CONNECTOR DIMENSIONS-LINEAR MEASURE IN,[mm] <5>											INFORMATION	BARREL LETTERING INFORMATION <12>
	ALUMINUM	COPPER	STUD SIZE	NO.OF. HOLES	B	C	D	E	Ø K	L	N	O.D	(T)	PLATING	
YA2CA1	#2 AWG CLASS B CONCENTRIC COMPRESSED COMPACT SIW	#2 AWG CLASS B,C CONCENTRIC COMPRESSED COMPACT	5/16	1	1.12 [28]	.88 [22]	.88 [22]	--	.38 [10]	2.50 [64]	.41 [10]	.53 [13]	.16 [4]	TIN <3>	FIG. 2
YA2CA2														NONE	FIG. 1
YA2CA3			3/8		1.12 [28]	.88 [22]	.94 [24]	--	.44 [11]	2.56 [65]	.44 [11]		.16 [4]	TIN <3>	FIG. 2
YA2CA4														NONE	FIG. 1
YA2CA5			1/4		1.00 [25]	.50 [13]	.75 [19]	--	.28 [7]	2.25 [57]	.33 [8]		.22 [6]	TIN <3>	FIG. 2
YA2CA9			1/2	2	1.12 [28]	.88 [22]	3.11 [79]	1.75 [44]	.56 [14]	4.73 [120]	.63 [16]		.16 [4]	TIN <3>	FIG. 2

COLOR CODE	DIE INFORMATION		BURNDY® INSTALLATION TOOLING (#CRIMPS)								DIELESS (#CRIMPS)		STRIP LENGTH
			MECHANICAL		HYDRAULIC								
	DIE INDEX	TYPE	OUR840	MD6	<10> Y34A <9> Y34B	<9> Y35,Y39 Y750 PAT750	<9> <8> Y46	<9> <7> Y45	Y48BH	Y60	MECHANICAL	HYDRAULIC	
PINK	348 163 239	PINK DIE SET	X2CART (4) X239 (4)	X2CART (4) W163 (3) W239 (2)	A2CAB (1)	U2CABT (1) U163 (1) U239 (1)	U2CABT (1) U163 (1) U239 (1)	U2CABT (1) U163 (1) U239 (1)	--	--	MRC840AL (2) MY29-3 (2)	Y81KFT (2) PAT81KFT (2) Y644 (1) PAT644 (1) Y444 (1) PAT444 (1)	1 1/4"
	348	NEST INDENTOR	--	--	A26D(1) B26D(1) Y34PA	--	--	--	--	--			

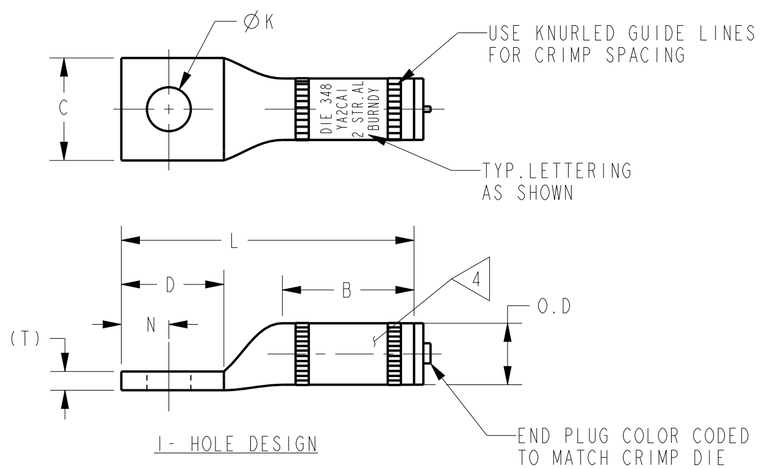

1- HOLE DESIGN

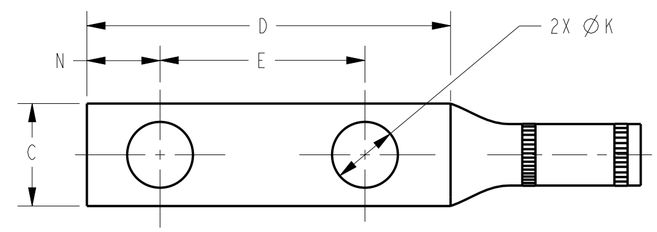

2- HOLE DESIGN

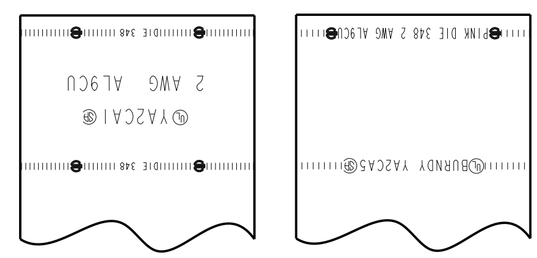

FIG. 1 FIG. 2

BARREL LETTERING VIEW <12>

NOTES:

1. ALL HYLUGS™ ACCOMMODATE U.S. STANDARD WASHERS

2. REMOVE ALL EXCESS PENETROX™ FROM CONNECTOR AND ADJACENT CONDUCTOR PRIOR TO TAPING.

<3> UL LISTED AND CSA CERTIFIED WIRE CONNECTORS. RATED 90 C (AL9CU) FOR USE WITH COPPER OR ALUMINUM CONDUCTOR. APPROVAL APPLY TO TIN PLATED CONNECTORS ONLY.

<4> CONNECTOR BARRELS PREFILLED WITH PENETROX™

<5> DIMENSIONS IN BRACKETS [ ] ARE IN MILLIMETERS ROUNDED OFF TO THE NEAREST MILLIMETER , UNLESS OTHERWISE NOTED,AND ARE FOR REFERENCE ONLY.

<6> ADD SUFFIX "DT" TO ORDER LUGS WITH CRIMP BARREL SEALED AIR TIGHT INSIDE THE TRANSITION.

<7> CATALOG #PT6515 ADAPTOR IS REQUIRED TO USE "U" DIES IN Y45 SERIES TOOLS.

<8> CATALOG #PUADP-1 ADAPTOR IS REQUIRED TO USE "U" DIES IN Y46 SERIES TOOLS.

<9> Y35P3 INDENTOR ADAPTOR REQUIRED FOR "Y34PR" TYPE INDENTORS.

<10> FOR USE BY CUSTOMERS THAT HAVE THIS HYPRESS™ .NO NEW HYPRESSES™ ARE BEING PROCESSED.

11 ADD SUFFIX "U" TO ORDER LUGS WITH UNDRILLED TONGUE.

<12> ENLARGED BARREL MARKING VIEW.

UNINSULATED COMPRESSION TERMINAL
MATERIAL: ALUMINUM TUBE

TO ORDER BURNDY® PRODUCTS CALL

UNITED STATES:
1-800-346-4175 (LONDONDERRY, NH)

CANADA:
1-800-361-6975 (QUEBEC)
1-800-387-6487 (ALL OTHER PROVINCES)

FOR PRODUCT INFO: http://www.burndy.com

HYLUG™

ITEM NO: NA			
CAT. NO: YA2CA-(SEE TABLE)			
DRAWN BY: E.S.K	7/19/72	BURNDY	
CHECKER: S.F.P	8/01/72		
DSN APPVL: R.B	8/02/72		
MFG APPVL: --	--		
QA APPVL: D.VARIO	6/19/95		
MKT APPVL: P.WERTHMAN	6/19/95		SCALE: 1:1
PROD FAM: CM&R COMPRESSION		DRAWING NO	REV
PROJECT #: --	SIZE	SD073935	BA
DOCUMENT TYPE: Sales	C		
REL LEVEL: Released		SHEET 4 OF 24	

REV: PE0200

DRAWING NO. SD073935

REV	DATE	DESCRIPTION	ECO	BY	C'H'K.
BA	2019-08-13 00:00:00 EDT	UPDATED AS PER MARKUP	51953	YR	SS

CATALOG NUMBER <3> <6>	CONDUCTOR SIZE		CONNECTOR DIMENSIONS-LINEAR MEASURE IN,[mm] <5>											INFORMATION	BARREL LETTERING INFORMATION <12>
	ALUMINUM	COPPER	STUD SIZE	NO.OF. HOLES	B	C	D	E	ØK	L	N	O.D	(T)	PLATING	
YAICA1	#1 AWG CLASS B CONCENTRIC COMPRESSED COMPACT SIW	#1 AWG CLASS B,C CONCENTRIC COMPRESSED COMPACT	3/8	1	.91 [23]	.76 [19]	1.19 [30]	-- --	.44 [11]	2.59 [66]	.44 [11]	.54 [14]	.19 [5]	TIN <3>	FIG. 2
YAICA2														NONE	FIG. 1
YAICA3			1/4		.91 [23]	.52 [13]	.75 [19]	-- --	.28 [7]	2.16 [55]	.33 [8]		.19 [5]	TIN <3>	FIG. 2
YAICA4			5/16		.91 [23]	.76 [19]	.81 [21]	-- --	.38 [10]	2.25 [57]	.41 [10]		.19 [5]	TIN <3>	FIG. 2
YAICA9			1/2	2	.91 [23]	.88 [22]	3.11 [79]	1.75 [44]	.56 [14]	4.52 [115]	.63 [16]		.19 [5]	TIN <3>	FIG. 2

COLOR CODE	DIE INFORMATION		BURNDY® INSTALLATION TOOLING (#CRIMPS)								DIELESS (#CRIMPS)		STRIP LENGTH
			MECHANICAL		HYDRAULIC								
	DIE INDEX	TYPE	OUR840	MD6	<10> Y34A <9> Y34B	<9> Y35,Y39 Y750 PAT750	<9> <8> Y46	<9> <7> Y45	Y48BH	Y60	MECHANICAL	HYDRAULIC	
GOLD	471 163	GOLD DIE SET	XICART (3)	XICART (3) WI63 (3)	AICAR (1)	UICART (1) UI63 (1)	UICART (1) UI63 (1)	UICART (1) UI63 (1)	--	--	MRC840AL (2) MY29-3 (2)	Y81KFT (2) PAT81KFT (2) Y644 (1) PAT644 (1) Y444 (1) PAT444 (1)	1 1/16"
	471	NEST INDENTOR	--	--	A26D(1) B26D(1) Y34PR-5	--	P26D(1) P34PR-5	--	--	--			

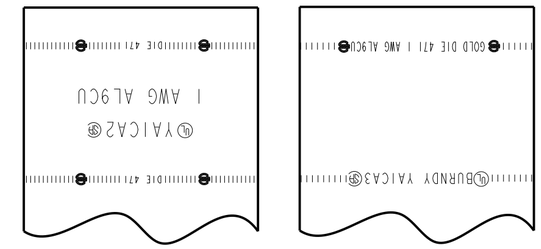

FIG. 1 FIG. 2

BARREL LETTERING VIEW <12>

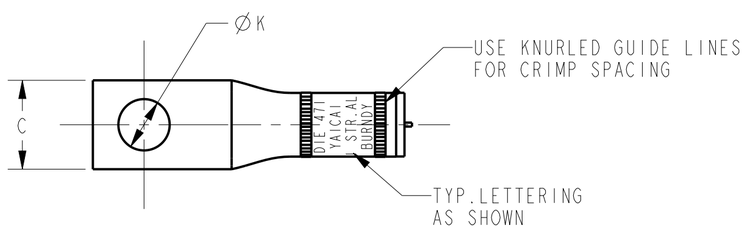

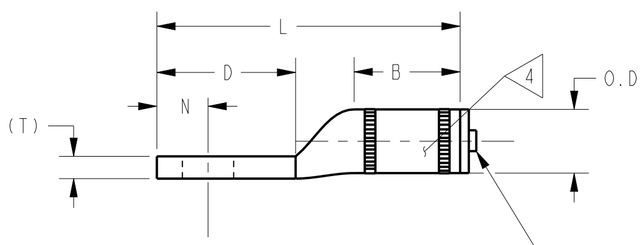

1- HOLE DESIGN

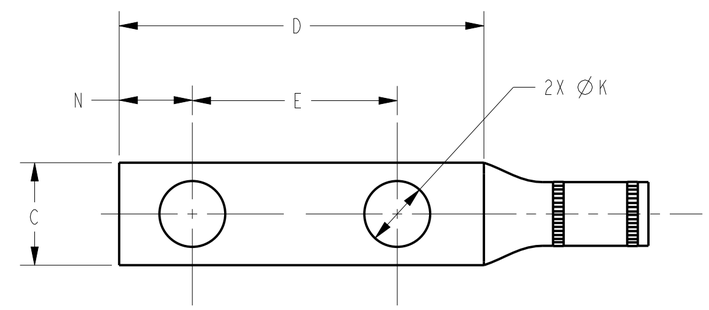

2- HOLE DESIGN

NOTES:

1. ALL HYLUGS TM ACCOMMODATE U.S. STANDARD WASHERS

2. REMOVE ALL EXCESS PENETROX TM FROM CONNECTOR AND ADJACENT CONDUCTOR PRIOR TO TAPING.

3 UL LISTED AND CSA CERTIFIED WIRE CONNECTORS. RATED 90 C (AL9CU) FOR USE WITH COPPER OR ALUMINUM CONDUCTOR. APPROVAL APPLY TO TIN PLATED CONNECTORS ONLY.

4 CONNECTOR BARRELS PREFILLED WITH PENETROX TM

5 DIMENSIONS IN BRACKETS [ ] ARE IN MILLIMETERS ROUNDED OFF TO THE NEAREST MILLIMETER , UNLESS OTHERWISE NOTED,AND ARE FOR REFERENCE ONLY.

6 ADD SUFFIX "DT" TO ORDER LUGS WITH CRIMP BARREL SEALED AIR TIGHT INSIDE THE TRANSITION.

7 CATALOG #PT6515 ADAPTOR IS REQUIRED TO USE "U" DIES IN Y45 SERIES TOOLS.

8 CATALOG #PUADP-1 ADAPTOR IS REQUIRED TO USE "U" DIES IN Y46 SERIES TOOLS.

9 Y35P3 INDENTOR ADAPTOR REQUIRED FOR "Y34PR" TYPE INDENTORS.

10 FOR USE BY CUSTOMERS THAT HAVE THIS HYPRESS TM .NO NEW HYPRESSES TM ARE BEING PROCESSED.

11 ADD SUFFIX "U" TO ORDER LUGS WITH UNDRILLED TONGUE.

12 ENLARGED BARREL MARKING VIEW.

UNINSULATED COMPRESSION TERMINAL
MATERIAL: ALUMINUM TUBE

TO ORDER BURNDY® PRODUCTS CALL

UNITED STATES:
1-800-346-4175 (LONDONDERRY, NH)

CANADA:
1-800-361-6975 (QUEBEC)
1-800-387-6487 (ALL OTHER PROVINCES)

FOR PRODUCT INFO: http://www.burndy.com

HYLUG TM

ITEM NO: NA

CAT. NO: YAICA-(SEE TABLE)

DRAWN BY:	E.S.K	7/19/72
CHECKER:	S.F.P	8/01/72
DSN APPVL:	R.B	8/02/72
MFG APPVL:	--	--
QA APPVL:	D.VARIO	6/19/95
MKT APPVL:	P.WERTHMAN	6/19/95
PROD FAM:	CM&R COMPRESSION	
PROJECT #:	--	
DOCUMENT TYPE:	Sales	
REL LEVEL:	Released	

BURNDY

SCALE: 1:1

SIZE	DRAWING NO	REV
C	SD073935	BA

SHEET 5 OF 24

REV: PE0200

DRAWING NO. SD073935

REV	DATE	DESCRIPTION	ECO	BY	C'H'K.
BA	2019-08-13 00:00:00 EDT	UPDATED AS PER MARKUP	51953	YR	SS

CATALOG NUMBER ◁3 ◁6	CONDUCTOR SIZE		CONNECTOR DIMENSIONS-LINEAR MEASURE IN,[mm] ◁5												INFORMATION		
	ALUMINUM	COPPER	STUD SIZE	NO.OF HOLES	B	C	D	E	H	K DIA.	L	N	O.D	T REF.	PLATING	BARREL LETTERING INFORMATION ◁12	
YA25A1	1/0 AWG CLASS B CONCENTRIC COMPRESSED COMPACT SIW	1/0 AWG CLASS B,C CONCENTRIC COMPRESSED COMPACT	5/16	1	1.00 [25]	.60 [15]	.87 [22]	--	--	.38 [10]	2.31 [59]	.41 [10]	.60 [15]	.21 [5]	TIN	FIG. 2	◁3
YA25A2					1.05 [27]	.82 [21]					2.36 [60]				NONE	FIG. 1	
YA25A3			3/8		1.05 [27]	.82 [21]	1.18 [30]	--	--	.44 [11]	2.67 [68]	.63 [16]		.21 [5]	TIN	FIG. 2	◁3
YA25A3NT69						.69 [18]									NONE	FIG. 2	
YA25A4			3/8		1.05 [27]	.82 [21]	1.18 [30]	--	--	.44 [11]	2.67 [68]	.63 [16]		.21 [5]	TIN	FIG. 1	◁3
YA25A9			1/2		1.05 [27]	1.03 [26]	1.34 [34]	--	--	.56 [14]	2.83 [72]	.63 [16]		.17 [4]	TIN	FIG. 2	◁3
YA25A10			--	--	1.00 [25]	.60 [15]	.87 [22]	--	--	--	2.31 [59]	--		.21 [5]	TIN	FIG. 1	◁3
YA25A5			3/8	2	1.05 [27]	.82 [21]	2.24 [57]	1.06 [27]	--	.44 [11]	3.73 [95]	.63 [16]		.21 [5]	TIN	FIG. 2	◁3
YA25A6									--						NONE	FIG. 1	
YA25A7			1/2		1.05 [27]	1.03 [26]	3.10 [79]	1.75 [44]	--	.56 [14]	4.59 [117]	.63 [16]		.17 [4]	TIN	FIG. 2	◁3
YA25A8									--						NONE	FIG. 1	
YA25A790									1.70 [43]		3.44 [87]				TIN	FIG. 2	◁3

COLOR CODE	DIE INFORMATION		BURNDY® INSTALLATION TOOLING (#CRIMPS)								DIELESS (#CRIMPS)		STRIP LENGTH
			MECHANICAL		HYDRAULIC								
	DIE INDEX	TYPE	OUR840	MD6	◁10 ◁9 Y34A Y34B	◁9 Y35,Y39 Y750, PAT750	◁9 ◁8 Y46	◁9 ◁7 Y45	Y48BH	Y60	MECHANICAL	HYDRAULIC	
TAN	296 241	TAN DIE SET	X25ART (4) X241 (4)	X25ART (4) W241 (2)	A25AR (1)	U25ART(1) U241 (1)	U25ART(1) U241 (1)	U25ART (1) U241 (1)	C25AR (1) U241 (1)	--	MRC840AL (2) MY29-3 (2)	Y81KFT (2) PAT81KFT (2) Y644 (1) PAT644 (1) Y444 (1) PAT444 (1)	1 3/16"
	296	NEST INDENTOR	--	--	A27D(1) B27D(1) Y34PR-5	--	P27D(1) P34PR-5	--	--	--			

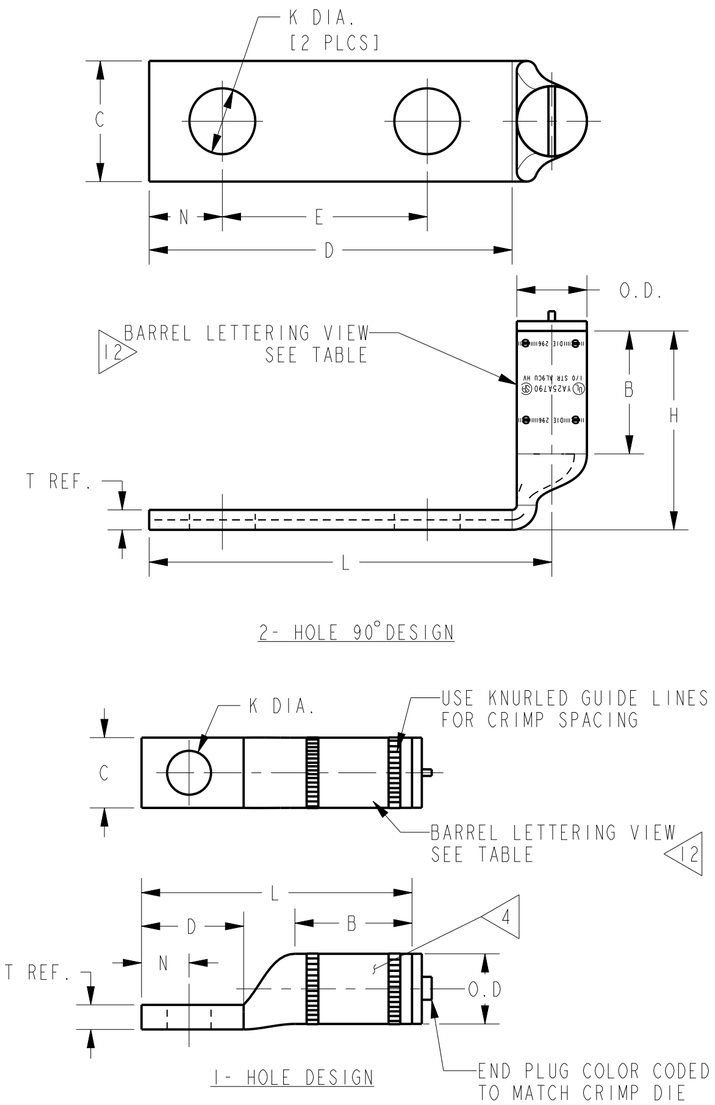

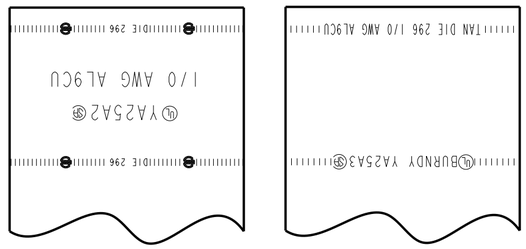

FIG. 1 FIG. 2

BARREL LETTERING VIEW ◁12

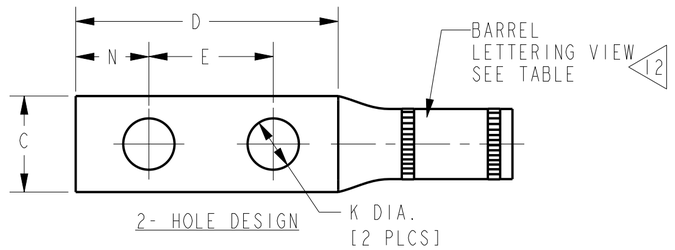

2- HOLE DESIGN

UNINSULATED COMPRESSION TERMINAL
MATERIAL: ALUMINUM TUBE

NOTES:

1. ALL HYLUGS™ ACCOMMODATE U.S. STANDARD WASHERS
2. REMOVE ALL EXCESS PENETROX™ FROM CONNECTOR AND ADJACENT CONDUCTOR PRIOR TO TAPING.
3. ◁3 UL LISTED AND CSA CERTIFIED WIRE CONNECTORS. RATED 90 C (AL9CU) FOR USE WITH COPPER OR ALUMINUM CONDUCTOR. APPROVAL APPLY TO TIN PLATED CONNECTORS ONLY.
4. ◁4 CONNECTOR BARRELS PREFILLED WITH PENETROX™
5. ◁5 DIMENSIONS IN BRACKETS [ ] ARE IN MILLIMETERS ROUNDED OFF TO THE NEAREST MILLIMETER , UNLESS OTHERWISE NOTED,AND ARE FOR REFERENCE ONLY.
6. ◁6 ADD SUFFIX "DT" TO ORDER LUGS WITH CRIMP BARREL SEALED AIR TIGHT INSIDE THE TRANSITION.
7. ◁7 CATALOG #PT6515 ADAPTOR IS REQUIRED TO USE "U" DIES IN Y45 SERIES TOOLS.
8. ◁8 CATALOG #PUADP-1 ADAPTOR IS REQUIRED TO USE "U" DIES IN Y46 SERIES TOOLS.
9. ◁9 Y35P3 INDENTOR ADAPTOR REQUIRED FOR "Y34PR" TYPE INDENTORS.
10. ◁10 FOR USE BY CUSTOMERS THAT HAVE THIS HYPRESS™ .NO NEW HYPRESSES™ ARE BEING PROCESSED.
11. ADD SUFFIX "U" TO ORDER LUGS WITH UNDRILLED TONGUE.
12. ◁12 ENLARGED BARREL MARKING VIEW.

TO ORDER BURNDY® PRODUCTS CALL

UNITED STATES:
1-800-346-4175 (LONDONDERRY, NH)

CANADA:
1-800-361-6975 (QUEBEC)
1-800-387-6487 (ALL OTHER PROVINCES)

FOR PRODUCT INFO: http://www.burndy.com

HYLUG™

ITEM NO: NA

CAT. NO: YA25A-(SEE TABLE)

DRAWN BY:	E.S.K	7/19/72
CHECKER:	S.F.P	8/01/72
DSN APPVL:	R.B	8/02/72
MFG APPVL:	--	--
QA APPVL:	D.VARIO	6/19/95
MKT APPVL:	P.WERTHMAN	6/19/95
PROD FAM:	CM&R COMPRESSION	
PROJECT #:	--	
DOCUMENT TYPE:	Sales	
REL LEVEL:	Released	

SIZE: C

BURNDY

SCALE: 1:1

DRAWING NO: SD073935

REV: BA

SHEET 6 OF 24

REV: PE0200

DRAWING NO. SD073935

REV	DATE	DESCRIPTION	ECO	BY	C'H'K.
BA	2019-08-13 00:00:00 EDT	UPDATED AS PER MARKUP	51953	YR	SS

CATALOG NUMBER <3> <6>	CONDUCTOR SIZE		CONNECTOR DIMENSIONS-LINEAR MEASURE IN,[mm] <5>											INFORMATION	BARREL LETTERING INFORMATION <12>	
	ALUMINUM	COPPER	STUD SIZE	NO. OF. HOLES	B	C	D	E	ØK	L	N	O.D	(T)	PLATING		
YA26A1	2/0 AWG CLASS B CONCENTRIC COMPRESSED COMPACT SIW	2/0 AWG CLASS B,C CONCENTRIC COMPRESSED COMPACT	1/2	1	1.17 [30]	1.03 [26]	1.36 [35]	--	.56 [14]	3.03 [77]	.63 [16]	.67 [17]	.20 [5]	TIN	FIG. 2	<3>
YA26A2														NONE	FIG. 1	
YA26A6			3/8		1.17 [30]	.67 [17]	1.18 [30]	--	.44 [11]	2.79 [71]	.44 [11]		.24 [6]	TIN	FIG. 2	<3>
YA26A7			5/16		1.17 [30]	.67 [17]	.81 [21]	--	.38 [10]	2.52 [64]	.41 [10]		.24 [6]	TIN	FIG. 2	<3>
YA26A8			5/8		1.17 [30]	1.03 [26]	1.36 [35]	--	.69 [18]	3.03 [77]	.63 [16]		.20 [5]	TIN	FIG. 2	<3>
YA26A9			5/16	2	1.17 [30]	1.03 [26]	1.57 [40]	.75 [19]	.38 [10]	3.24 [82]	.41 [10]		.24 [6]	TIN	FIG. 2	<3>
YA26A3			1/2		1.17 [30]	1.03 [26]	3.11 [79]	1.75 [44]	.56 [14]	4.78 [121]	.63 [16]		.20 [5]	TIN	FIG. 2	<3>
YA26A4														NONE	FIG. 1	
YA26A5			3/8		1.17 [30]	.92 [23]	1.89 [48]	1.00 [25]	.44 [11]	3.56 [90]	.44 [11]		.24 [6]	TIN	FIG. 2	<3>

COLOR CODE	DIE INFORMATION		BURNDY® INSTALLATION TOOLING (#CRIMPS)								DIELESS (#CRIMPS)		STRIP LENGTH
			MECHANICAL		HYDRAULIC								
	DIE INDEX	TYPE	OUR840	MD6	<10> <9> Y34A Y34B	<9> Y35,Y39 Y750 PAT750	<9> <8> Y46	<9> <7> Y45	Y48BH	Y60	MECHANICAL	HYDRAULIC	
OLIVE	297 BG 245	OLIVE DIE SET	X26ART (4) XBG (4) X245 (4)	X26ART (4) WBG (2) W245 (3)	A26AR (2)	U26ART (2) UBG (2) U245 (1)	U26ART (2) UBG (2) U245 (1)	U26ART (2) UBG (2) U245 (1)	C28AR (1)	--	MRC840AL (3) MY29-3 (2)	Y81KFT (2) PAT81KFT (2) Y644 (1) PAT644 (1) Y444 (1) PAT444 (1)	1 3/8"
	297	NEST INDENTOR	--	--	A29D(1) B29D(1) Y34PR-5	--	P29D(1) P34PR-5	--	--	--			

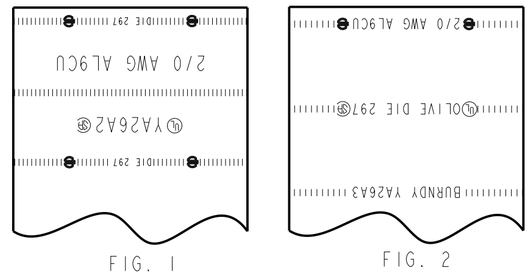

FIG. 1 FIG. 2

BARREL LETTERING VIEW <12>

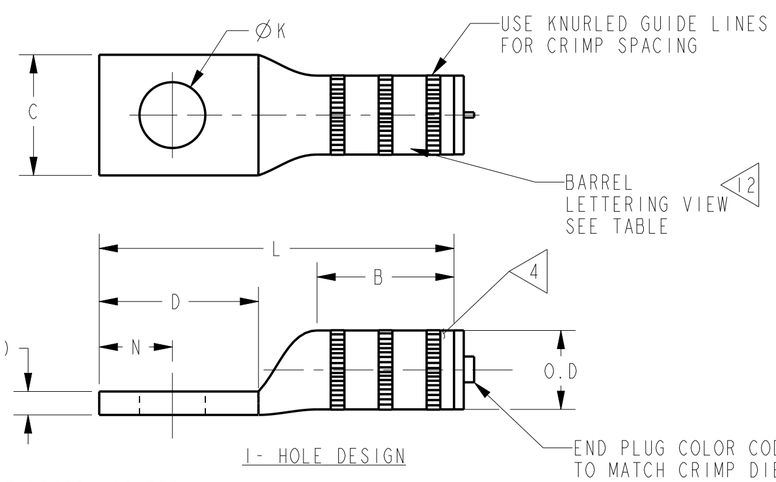

1- HOLE DESIGN

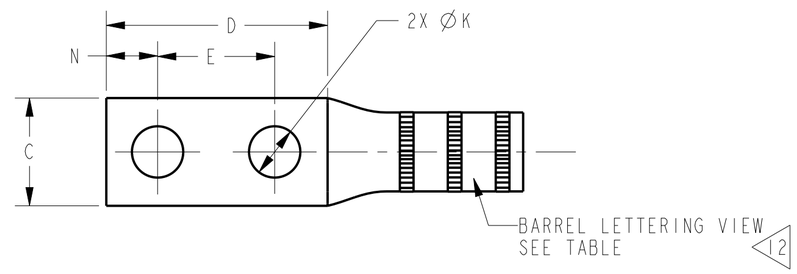

2- HOLE DESIGN

NOTES:

1. ALL HYLUGS™ ACCOMMODATE U.S. STANDARD WASHERS

2. REMOVE ALL EXCESS PENETROX™ FROM CONNECTOR AND ADJACENT CONDUCTOR PRIOR TO TAPING.

<3> UL LISTED AND CSA CERTIFIED WIRE CONNECTORS. RATED 90 C (AL9CU) FOR USE WITH COPPER OR ALUMINUM CONDUCTOR. APPROVAL APPLY TO TIN PLATED CONNECTORS ONLY.

<4> CONNECTOR BARRELS PREFILLED WITH PENETROX™

<5> DIMENSIONS IN BRACKETS [ ] ARE IN MILLIMETERS ROUNDED OFF TO THE NEAREST MILLIMETER , UNLESS OTHERWISE NOTED,AND ARE FOR REFERENCE ONLY.

<6> ADD SUFFIX "DT" TO ORDER LUGS WITH CRIMP BARREL SEALED AIR TIGHT INSIDE THE TRANSITION.

<7> CATALOG #PT6515 ADAPTOR IS REQUIRED TO USE "U" DIES IN Y45 SERIES TOOLS.

<8> CATALOG #PUADP-1 ADAPTOR IS REQUIRED TO USE "U" DIES IN Y46 SERIES TOOLS.

<9> Y35P3 INDENTOR ADAPTOR REQUIRED FOR "Y34PR" TYPE INDENTORS.

<10> FOR USE BY CUSTOMERS THAT HAVE THIS HYPRESS™ .NO NEW HYPRESSES™ ARE BEING PROCESSED.

11 ADD SUFFIX "U" TO ORDER LUGS WITH UNDRILLED TONGUE.

<12> ENLARGED BARREL MARKING VIEW.

UNINSULATED COMPRESSION TERMINAL
MATERIAL: ALUMINUM TUBE

TO ORDER BURNDY® PRODUCTS CALL

UNITED STATES:
1-800-346-4175 (LONDONDERRY, NH)

CANADA:
1-800-361-6975 (QUEBEC)
1-800-387-6487 (ALL OTHER PROVINCES)

FOR PRODUCT INFO: http://www.burndy.com

HYLUG ™

ITEM NO: NA

CAT. NO: YA26A-(SEE TABLE)

DRAWN BY:	E.S.K	7/9/72
CHECKER:	S.F.P	8/01/72
DSN APPVL:	R.B	8/02/72
MFG APPVL:	--	--
QA APPVL:	D.VARIO	6/19/95
MKT APPVL:	P.WERTHMAN	6/19/95
PROD FAM:	CM&R COMPRESSION	
PROJECT #:	--	
DOCUMENT TYPE:	Sales	
REL LEVEL:	Released	

BURNDY

SCALE: 1:1

SIZE: C

DRAWING NO: SD073935

REV: BA

SHEET 7 OF 24

REV: PE0200

DRAWING NO. SD073935

REV	DATE	DESCRIPTION	ECO	BY	C'H'K.
BA	2019-08-13 00:00:00 EDT	UPDATED AS PER MARKUP	51953	YR	SS

CATALOG NUMBER 3 6	CONDUCTOR SIZE		CONNECTOR DIMENSIONS-LINEAR MEASURE IN,[mm] 5											INFORMATION	BARREL LETTERING INFORMATION 12	
	ALUMINUM	COPPER	STUD SIZE	NO.OF. HOLES	B	C	D	E	ØK	L	N	O.D	(T)	PLATING		
YA27A1	3/0 AWG CLASS B CONCENTRIC COMPRESSED COMPACT SIW	3/0 AWG CLASS B,C CONCENTRIC COMPRESSED COMPACT	3/8	1	1.11 [28]	.73 [19]	1.18 [30]	--	.44 [11]	2.88 [73]	.44 [11]	.76 [19]	.26 [7]	TIN	FIG. 2	3
YA27A2										3.08 [78]				NONE	FIG. 1	
YA27A3			1/2		1.31 [33]	1.04 [26]	1.37 [35]	--	.56 [14]	3.27 [83]	.63 [16]		.26 [7]	TIN	FIG. 2	3
YA27A4														NONE	FIG. 1	
YA27A5			1/2	2	1.31 [33]	1.04 [26]	3.12 [79]	1.75 [44]	.56 [14]	5.02 [128]	.63 [16]		.26 [7]	TIN	FIG. 2	3
YA27A6														NONE	FIG. 1	
YA27A7			3/8		1.31 [33]	1.04 [26]	1.89 [48]	1.00 [25]	.44 [11]	3.79 [96]	.44 [11]		.26 [7]	TIN	FIG. 2	3

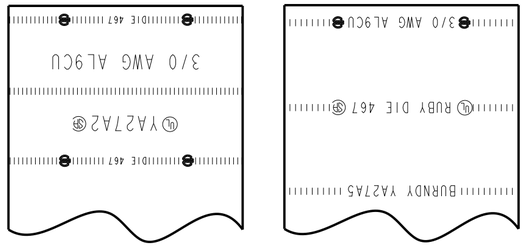

FIG. 1 FIG. 2

BARREL LETTERING VIEW 12

COLOR CODE	DIE INFORMATION		BURNDY® INSTALLATION TOOLING (# CRIMPS)								DIELESS (#CRIMPS)		STRIP LENGTH
			MECHANICAL		HYDRAULIC								
	DIE INDEX	TYPE	OUR840	MD6	10 9 Y34A Y34B	9 Y35,Y39 Y750 PAT750	9 8 Y46	9 7 Y45	Y48BH	Y60	MECHANICAL	HYDRAULIC	
RUBY	467 I66	RUBY DIE SET	X27ART (4)	X27ART (4) W166 (4)	A27AR (2)	U27ART (2) U166 (2)	U27ART (2) U166 (2)	U27ART (2) U166 (2)	U27AR (1)	--	MRC840AL (3) MY29-3 (2)	Y81KFT (2) PAT81KFT (2) Y644 (1) PAT644 (1) Y444 (1) PAT444 (1)	1 1/2"
	467	NEST INDENTOR	--	--	A30D(1) B30D(1) Y34PR-5	--	P30D(1) P34PR-5	--	--	--			

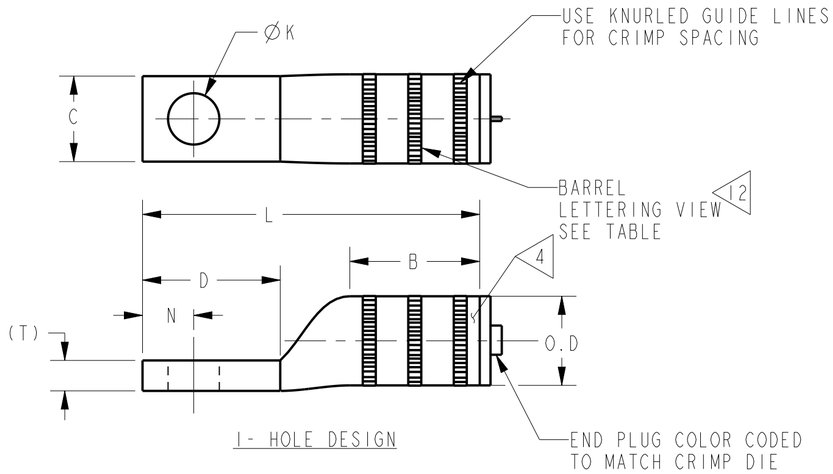

1- HOLE DESIGN

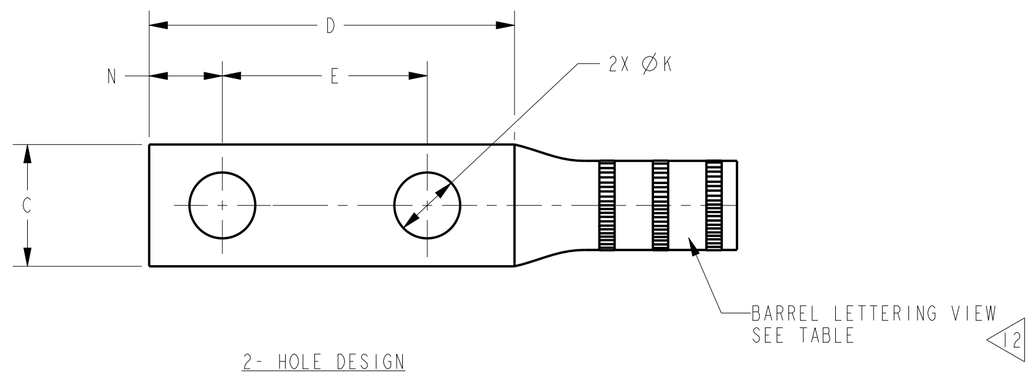

2- HOLE DESIGN

NOTES:

1. ALL HYLUGS™ ACCOMMODATE U.S. STANDARD WASHERS
2. REMOVE ALL EXCESS PENETROX™ FROM CONNECTOR AND ADJACENT CONDUCTOR PRIOR TO TAPING.
3. UL LISTED AND CSA CERTIFIED WIRE CONNECTORS. RATED 90 C (AL9CU) FOR USE WITH COPPER OR ALUMINUM CONDUCTOR. APPROVAL APPLY TO TIN PLATED CONNECTORS ONLY.
4. CONNECTOR BARRELS PREFILLED WITH PENETROX™
5. DIMENSIONS IN BRACKETS [ ] ARE IN MILLIMETERS ROUNDED OFF TO THE NEAREST MILLIMETER , UNLESS OTHERWISE NOTED,AND ARE FOR REFERENCE ONLY.
6. ADD SUFFIX "DT" TO ORDER LUGS WITH CRIMP BARREL SEALED AIR TIGHT INSIDE THE TRANSITION.
7. CATALOG #PT6515 ADAPTOR IS REQUIRED TO USE "U" DIES IN Y45 SERIES TOOLS.
8. CATALOG #PUADP-1 ADAPTOR IS REQUIRED TO USE "U" DIES IN Y46 SERIES TOOLS.
9. Y35P3 INDENTOR ADAPTOR REQUIRED FOR "Y34PR" TYPE INDENTORS.
10. FOR USE BY CUSTOMERS THAT HAVE THIS HYPRESS™ .NO NEW HYPRESSES™ ARE BEING PROCESSED.
11. ADD SUFFIX "U" TO ORDER LUGS WITH UNDRILLED TONGUE.
12. ENLARGED BARREL MARKING VIEW.

UNINSULATED COMPRESSION TERMINAL
MATERIAL: ALUMINUM TUBE

TO ORDER BURNDY® PRODUCTS CALL

UNITED STATES:
1-800-346-4175 (LONDONDERRY, NH)

CANADA:
1-800-361-6975 (QUEBEC)
1-800-387-6487 (ALL OTHER PROVINCES)

FOR PRODUCT INFO: http://www.burndy.com

HYLUG ™

ITEM NO: NA

CAT. NO: YA27A-(SEE TABLE)

DRAWN BY:	E.S.K	7/19/72
CHECKER:	S.F.P	8/01/72
DSN APPVL:	R.B	8/02/72
MFG APPVL:	--	--
QA APPVL:	D.VARIO	6/19/95
MKT APPVL:	P.WERTHMAN	6/19/95

PROD FAM: CM&R COMPRESSION

PROJECT #: --

DOCUMENT TYPE: Sales

REL LEVEL: Released

SIZE: C

BURNDY

SCALE: 1:1

DRAWING NO: SD073935

REV: BA

SHEET 8 OF 24

REV: PE0200

DRAWING NO. SD073935

REV	DATE	DESCRIPTION	ECO	BY	C'H'K.
BA	2019-08-13 00:00:00 EDT	UPDATED AS PER MARKUP	51953	YR	SS

CATALOG NUMBER <3> <7>	CONDUCTOR SIZE		CONNECTOR DIMENSIONS-LINEAR MEASURE IN,[mm] <5>												INFORMATION
	ALUMINUM	COPPER	STUD SIZE	NO.OF. HOLES	B ±.08	C ±.04	D REF.	E ±.02	ØK ±.02	L ±.12	N ±.03	O.D ±.01	T REF.	H REF.	PLATING
YA28A1	4/0 AWG CLASS B CONCENTRIC COMPRESSED COMPACT SIW	4/0 AWG CLASS B,C CONCENTRIC COMPRESSED COMPACT	3/8	1	1.39 [35]	1.17 [30]	1.18 [30]	--	.44 [11]	3.26 [83]	.44 [11]	.85 [22]	.30 [8]	--	TIN <3>
YA28A2															NONE
YA28A3			1/2		1.39 [35]	1.17 [30]	1.36 [35]	--	.56 [14]	3.44 [87]	.63 [16]		.30 [8]		TIN <3>
YA28A4															NONE
YA28A9			5/8	1	1.39 [35]	1.17 [30]	1.52 [39]	--	.69 [18]	3.60 [91]	.75 [19]		.30 [8]		TIN <3>
YA28A5			1/2	2	1.39 [35]	1.17 [30]	3.11 [79]	1.75 [44]	.56 [14]	5.19 [132]	.63 [16]		.30 [8]		TIN <3>
YA28A6															NONE
YA28A7			3/8		1.39 [35]	1.17 [30]	1.89 [48]	1.00 [25]	.44 [11]	3.97 [101]	.44 [11]		.30 [8]		TIN <3>
YA28A8			1/2		1.39 [35]	1.17 [30]	3.11 [79]	1.75 [44]	.56 [14]	5.19 [132]	.63 [16]		.30 [8]		NONE <6>
YA28A345			1/2	1	1.39 [35]	1.17 [30]	1.36 [35]	--	.56 [14]	3.48 [88]	.63 [16]		.30 [8]	2.22 [56]	TIN <3>
YA28A390										1.90 [48]				2.70 [69]	
YA28A590			1/2	2	1.39 [35]	1.17 [30]	3.11 [79]	1.75 [44]	.56 [14]	3.63 [98]	.63 [16]		.30 [8]	2.73 [69]	TIN <3>

COLOR CODE	DIE INFORMATION		BURNDY® INSTALLATION TOOLING (#CRIMPS)								DIELESS (#CRIMPS)		STRIP LENGTH
			MECHANICAL		HYDRAULIC								
	DIE INDEX	TYPE	OUR840	MD6	<11> Y34A Y34B <10>	<10> Y35, Y39 Y750 PAT750	<10> <9> Y46	<10> <8> Y45	Y48BH	Y60	MECHANICAL	HYDRAULIC	
WHITE	298 660	WHITE DIE SET	X28ART (6) X660 (8)	X28ART (6) W660 (3)	A28AR (2)	U28ART (2) U660 (2)	U28ART (2) U660 (2)	U28ART (2) U660 (2)	C28AR (1)	--	MRC840AL (3) MY29-3 (2)	Y81KFT (2) PAT81KFT (2) Y644 (1) PAT644 (1) Y444 (1) PAT444 (1)	1 5/8"
	298	NEST INDENTOR	--	--	A31D(1) B31D(1) Y34PR-5	--	P31D(1) P34PR-5	--	--	--			

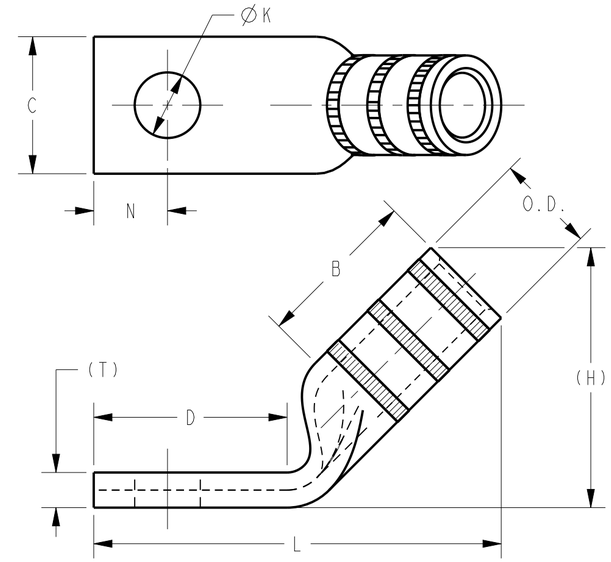

<12> 1- HOLE 45° DESIGN

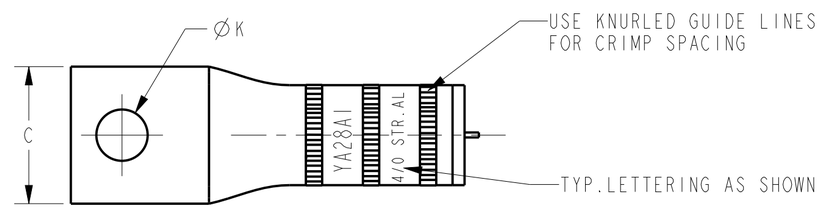

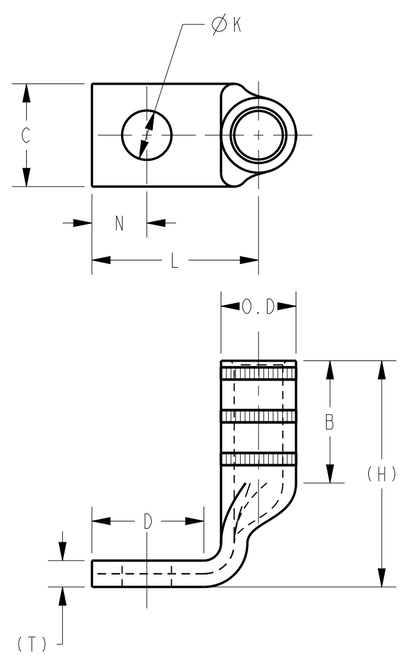

<12> 1- HOLE 90° DESIGN

SCALE 3:4

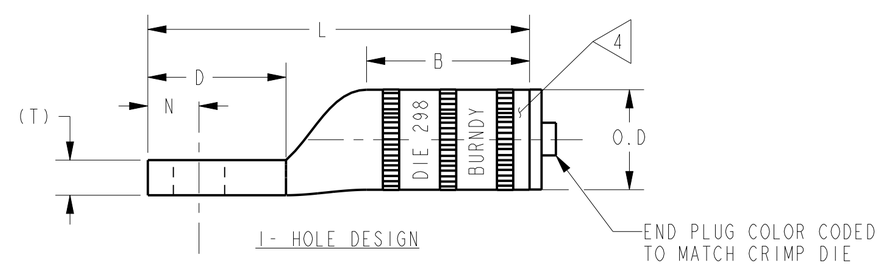

1- HOLE DESIGN

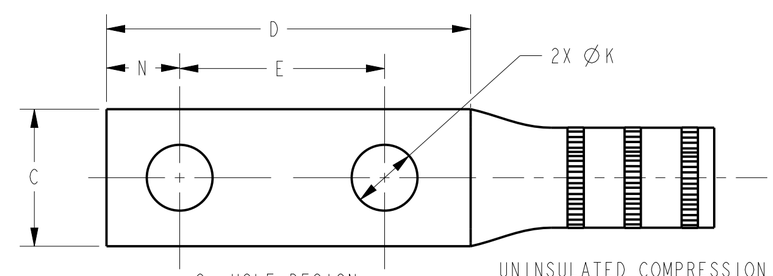

2- HOLE DESIGN

UNINSULATED COMPRESSION TERMINAL
MATERIAL: ALUMINUM TUBE

NOTES:

1. ALL HYLUGS™ ACCOMMODATE U.S. STANDARD WASHERS

2. REMOVE ALL EXCESS PENETROX™ FROM CONNECTOR AND ADJACENT CONDUCTOR PRIOR TO TAPING.

<3> UL LISTED AND CSA CERTIFIED WIRE CONNECTORS. RATED 90 C (AL9CU) FOR USE WITH COPPER OR ALUMINUM CONDUCTOR. APPROVAL APPLY TO TIN PLATED CONNECTORS ONLY.

<4> CONNECTOR BARRELS PREFILLED WITH PENETROX™

<5> DIMENSIONS IN BRACKETS [ ] ARE IN MILLIMETERS ROUNDED OFF TO THE NEAREST MILLIMETER , UNLESS OTHERWISE NOTED,AND ARE FOR REFERENCE ONLY.

<6> NO-OX-ID "A" COATED TO PREVENT FORMATION OF OXIDATION

<7> ADD SUFFIX "DT" TO ORDER LUGS WITH CRIMP BARREL SEALED AIR TIGHT INSIDE THE TRANSITION.

<8> CATALOG #PT65I5 ADAPTOR IS REQUIRED TO USE "U" DIES IN Y45 SERIES TOOLS.

<9> CATALOG #PUADP-1 ADAPTOR IS REQUIRED TO USE "U" DIES IN Y46 SERIES TOOLS.

<10> Y35P3 INDENTOR ADAPTOR REQUIRED FOR "Y34PR" TYPE INDENTORS.

<11> FOR USE BY CUSTOMERS THAT HAVE THIS HYPRESS™ .NO NEW HYPRESSES™ ARE BEING PROCESSED.

<12> CAN ALSO BE ORDERED AS 2 HOLE 45 AND 90 DEGREE.

13 ADD SUFFIX "U" TO ORDER LUGS WITH UNDRILLED TONGUE.

TO ORDER BURNDY® PRODUCTS CALL

UNITED STATES:
1-800-346-4175 (LONDONDERRY, NH)

CANADA:
1-800-361-6975 (QUEBEC)
1-800-387-6487 (ALL OTHER PROVINCES)

FOR PRODUCT INFO: http://www.burndy.com

HYLUG™

ITEM NO: NA

CAT. NO: YA28A-(SEE TABLE)

DRAWN BY:	E.S.K	7/19/72
CHECKER:	S.F.P	8/01/72
DSN APPVL:	R.B	8/02/72
MFG APPVL:	--	--
QA APPVL:	D.VARIO	6/19/95
MKT APPVL:	P.WERTHMAN	6/19/95
PROD FAM:	CM&R COMPRESSION	
PROJECT #:	--	
DOCUMENT TYPE:	Sales	
REL LEVEL:	Released	

BURNDY

SCALE: 1:1

SIZE: C

DRAWING NO: SD073935

REV: BA

SHEET 9 OF 24

REV: PE0200

DRAWING NO. SD073935

REV	DATE	DESCRIPTION	ECO	BY	C'H'K.
BA	2019-08-13 00:00:00 EDT	UPDATED AS PER MARKUP	51953	YR	SS

CATALOG NUMBER <3> <6>	CONDUCTOR SIZE		CONNECTOR DIMENSIONS-LINEAR MEASURE IN,[mm] <5>											INFORMATION	BARREL LETTERING INFORMATION <12>
	ALUMINUM	COPPER	STUD SIZE	NO.OF. HOLES	B	C	D	E	ØK	L	N	O.D	(T)	PLATING	
YA29A1	250 Kcmil CLASS B CONCENTRIC COMPRESSED COMPACT SIW	250 Kcmil CLASS B,C CONCENTRIC COMPRESSED COMPACT	1/2	1	1.45 [37]	1.26 [32]	1.36 [35]	--	.56 [14]	3.53 [90]	.63 [16]	.92 [37]	.33 [8]	TIN <3>	FIG. 2
YA29A2														NONE	FIG. 1
YA29A3			1/2	2	1.45 [37]	1.26 [32]	3.11 [79]	1.75 [44]	.56 [14]	5.28 [134]	.63 [16]		.33 [8]	TIN <3>	FIG. 2
YA29A4														NONE	FIG. 1
YA29A5			3/8		1.45 [37]	1.26 [32]	1.89 [48]	1.00 [25]	.44 [11]	4.06 [103]	.44 [11]		.33 [8]	TIN <3>	FIG. 2
YA29A6			5/8	1	1.45 [37]	1.26 [32]	1.52 [39]	--	.69 [18]	3.69 [94]	.75 [19]		.33 [8]	TIN <3>	FIG. 2

COLOR CODE	DIE INFORMATION		BURNDY® INSTALLATION TOOLING (#CRIMPS)								DIELESS (#CRIMPS)		STRIP LENGTH
			MECHANICAL		HYDRAULIC								
	DIE INDEX	TYPE	OUR840	MD6	<10> <9> Y34A Y34B	<9> Y35,Y39 Y750 PAT750	<9> <8> Y46	<9> <7> Y45	Y48BH	Y60	MECHANICAL	HYDRAULIC	
RED	324	RED DIE SET	--	--	A29AR (2)	U29ART (2)	U29ART (2)	U29ART (2)	C29AR (1)	L29ART (1)	--	Y81KFT (2) PAT81KFT (2) Y644 (1) PAT644 (1) Y444 (1) PAT444 (1)	1 5/8"
		NEST INDENTOR	--	--	A32D(1) B32D(1) Y34PR-5	--	P32D(1) P34PR-5	--	--	--			

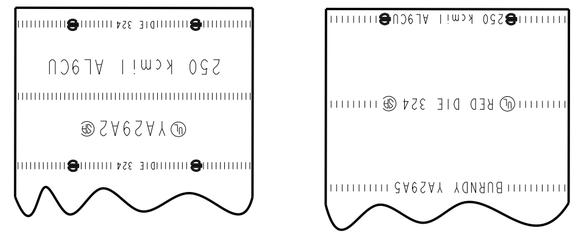

FIG. 1 FIG. 2

BARREL LETTERING VIEW <12>

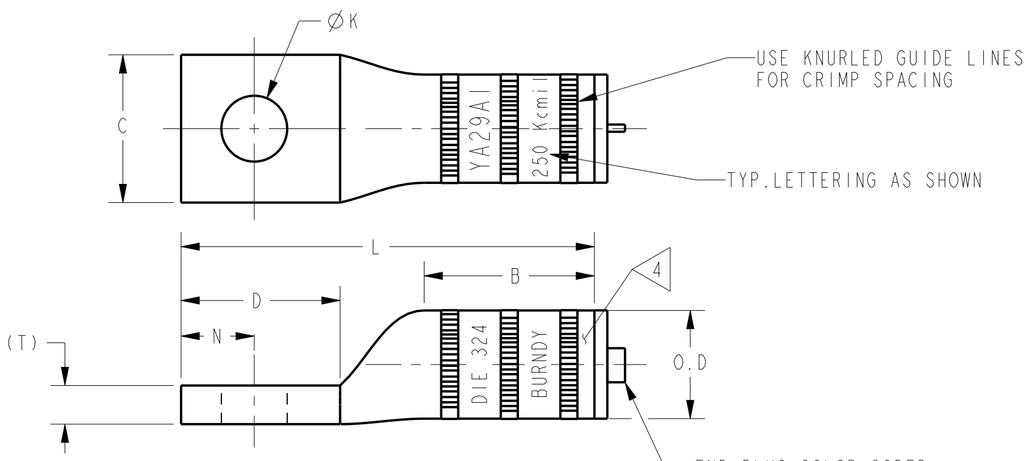

1- HOLE DESIGN

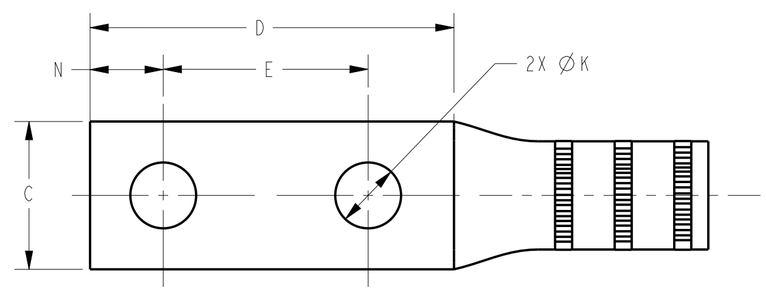

2- HOLE DESIGN

NOTES:

1. ALL HYLUGS™ ACCOMMODATE U.S. STANDARD WASHERS
2. REMOVE ALL EXCESS PENETROX™ FROM CONNECTOR AND ADJACENT CONDUCTOR PRIOR TO TAPING.
3. UL LISTED AND CSA CERTIFIED WIRE CONNECTORS. RATED 90 C (AL9CU) FOR USE WITH COPPER OR ALUMINUM CONDUCTOR. APPROVAL APPLY TO TIN PLATED CONNECTORS ONLY.
4. CONNECTOR BARRELS PREFILLED WITH PENETROX™
5. DIMENSIONS IN BRACKETS [ ] ARE IN MILLIMETERS ROUNDED OFF TO THE NEAREST MILLIMETER , UNLESS OTHERWISE NOTED,AND ARE FOR REFERENCE ONLY.
6. ADD SUFFIX "DT" TO ORDER LUGS WITH CRIMP BARREL SEALED AIR TIGHT INSIDE THE TRANSITION.
7. CATALOG #PT6515 ADAPTOR IS REQUIRED TO USE "U" DIES IN Y45 SERIES TOOLS.
8. CATALOG #PUADP-1 ADAPTOR IS REQUIRED TO USE "U" DIES IN Y46 SERIES TOOLS.
9. Y35P3 INDENTOR ADAPTOR REQUIRED FOR "Y34PR" TYPE INDENTORS.
10. FOR USE BY CUSTOMERS THAT HAVE THIS HYPRESS™ .NO NEW HYPRESSES™ ARE BEING PROCESSED.
11. ADD SUFFIX "U" TO ORDER LUGS WITH UNDRILLED TONGUE.
12. ENLARGED BARREL MARKING VIEW.

UNINSULATED COMPRESSION TERMINAL
MATERIAL: ALUMINUM TUBE

TO ORDER BURNDY® PRODUCTS CALL

UNITED STATES:
1-800-346-4175 (LONDONDERRY, NH)

CANADA:
1-800-361-6975 (QUEBEC)
1-800-387-6487 (ALL OTHER PROVINCES)

FOR PRODUCT INFO: http://www.burndy.com

HYLUG™

ITEM NO: NA

CAT. NO: YA29A-(SEE TABLE)

DRAWN BY:	E.S.K	7/20/72
CHECKER:	S.F.P	8/01/72
DSN APPVL:	R.B	8/02/72
MFG APPVL:	--	--
QA APPVL:	D.VARIO	8/19/95
MKT APPVL:	P.WERTHMAN	6/18/95

PROD FAM: CM&R COMPRESSION

PROJECT #: --

DOCUMENT TYPE: Sales

REL LEVEL: Released

SIZE: C

BURNDY

SCALE: 1:1

DRAWING NO: SD073935

REV: BA

SHEET 10 OF 24

REV: PE0200

DRAWING NO.
SD073935

REV	DATE	DESCRIPTION	ECO	BY	C'H'K.
BA	2019-08-13 00:00:00 EDT	UPDATED AS PER MARKUP	51953	YR	SS

CATALOG NUMBER ◁3◁6	CONDUCTOR SIZE		CONNECTOR DIMENSIONS-LINEAR MEASURE IN,[mm] ◁5											INFORMATION	BARREL LETTERING INFORMATION ◁13
	ALUMINUM	COPPER	STUD SIZE	NO.OF. HOLES	B	C	D	E	ØK	L	N	O.D	(T)	PLATING	
YA30A1	300 Kcmil CLASS B CONCENTRIC COMPRESSED COMPACT SIW 4/0 AWG CCA DLO (329/22)	300 Kcmil CLASS B,C CONCENTRIC COMPRESSED COMPACT	1/2	1	1.53 [39]	1.38 [35]	1.37 [35]	--	.56 [14]	3.90 [99]	.63 [16]	1.01 [26]	.36 [9]	TIN◁3	FIG. 2
YA30A2														NONE	FIG. 1
YA30A6			3/8		1.53 [39]	1.38 [35]	1.37 [35]	--	.44 [11]	3.90 [99]	.63 [16]		.36 [9]	TIN◁3	FIG. 2
YA30A3			1/2	2	1.53 [39]	1.38 [35]	3.11 [79]	1.75 [44]	.56 [14]	5.64 [143]	.63 [16]		.36 [9]	TIN◁3	FIG. 2
YA30A4														NONE	FIG. 1
YA30A5			3/8		1.53 [39]	1.38 [35]	1.89 [48]	1.00 [25]	.44 [11]	4.42 [112]	.44 [11]		.36 [9]	TIN◁3	FIG. 2
YA30A9NT100			5/16	1	1.53 [39]	1.00 [25]	1.37 [35]	--	.38 [10]	3.90 [99]	.63 [16]		.36 [9]	TIN◁3	FIG. 2

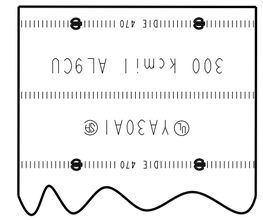

FIG. 1

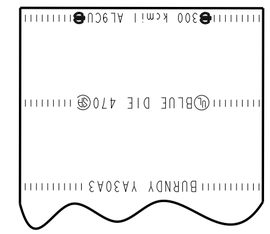

FIG. 2

BARREL LETTERING VIEW◁13

COLOR CODE	DIE INFORMATION		BURNDY® INSTALLATION TOOLING (#CRIMPS)								DIELESS (#CRIMPS)		STRIP LENGTH
			MECHANICAL		HYDRAULIC								
	DIE INDEX	TYPE	OUR840	MD6	◁10◁9 Y34A Y34B	◁9 Y35,Y39 Y750 PAT750	◁9◁8 Y46	◁9◁7 Y45	Y48BH	Y60	MECHANICAL	HYDRAULIC	
BLUE	470	BLUE DIE SET	--	--	A30AR (2)	U30ART (2)	U30ART (2)	U30ART (2)	C30AR (1)	L30ART (1)	--	Y81KFT (2) PAT81KFT (2) Y644 (1) PAT644 (1) Y444 (1) PAT444 (1)	1 3/4"
		NEST INDENTOR	--	--	A34D(1) Y34PR-11	--	P34D(1) P48PR-1	--	C34D(1) Y48PR-1	--			

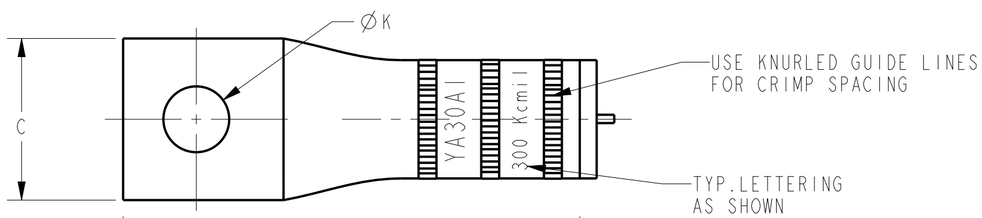

1- HOLE DESIGN

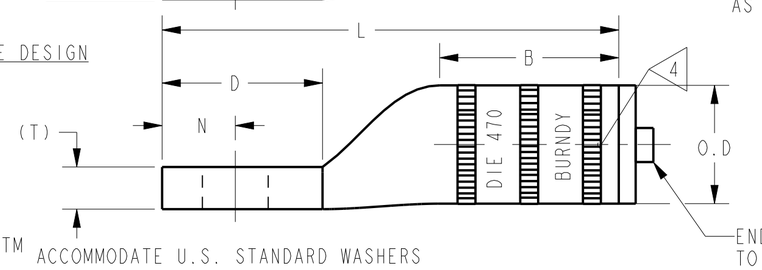

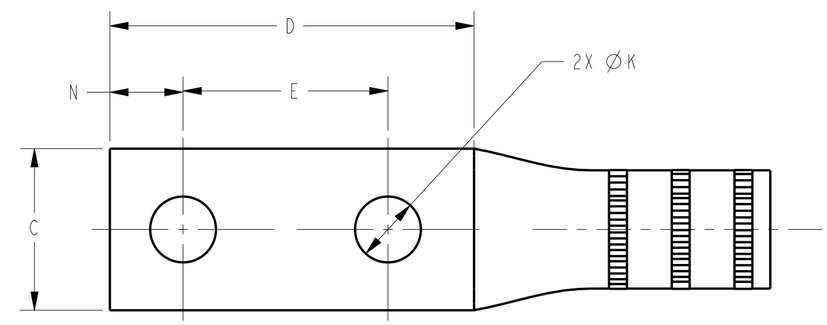

2- HOLE DESIGN

NOTES:

1. ALL HYLUGS™ ACCOMMODATE U.S. STANDARD WASHERS
2. REMOVE ALL EXCESS PENETROX™ FROM CONNECTOR AND ADJACENT CONDUCTOR PRIOR TO TAPING.
3. ◁3 UL LISTED AND CSA CERTIFIED WIRE CONNECTORS. RATED 90 C (AL9CU) FOR USE WITH COPPER OR ALUMINUM CONDUCTOR. APPROVAL APPLY TO TIN PLATED CONNECTORS ONLY.
4. ◁4 CONNECTOR BARRELS PREFILLED WITH PENETROX™
5. ◁5 DIMENSIONS IN BRACKETS [ ] ARE IN MILLIMETERS ROUNDED OFF TO THE NEAREST MILLIMETER , UNLESS OTHERWISE NOTED,AND ARE FOR REFERENCE ONLY.
6. ◁6 ADD SUFFIX "DT" TO ORDER LUGS WITH CRIMP BARREL SEALED AIR TIGHT INSIDE THE TRANSITION.
7. ◁7 CATALOG #PT6515 ADAPTOR IS REQUIRED TO USE "U" DIES IN Y45 SERIES TOOLS.
8. ◁8 CATALOG #PUADP-1 ADAPTOR IS REQUIRED TO USE "U" DIES IN Y46 SERIES TOOLS.
9. ◁9 Y35P3 INDENTOR ADAPTOR REQUIRED FOR "Y34PR" TYPE INDENTORS.
10. ◁10 FOR USE BY CUSTOMERS THAT HAVE THIS HYPRESS™ .NO NEW HYPRESSES™ ARE BEING PROCESSED.
11. UL LISTED WITH DLO COPPER CLAD ALUMINUM CONDUCTOR USING Y644 AND Y444 TOOLS ONLY.
12. ADD SUFFIX "U" TO ORDER LUGS WITH UNDRILLED TONGUE.
13. ◁13 ENLARGED BARREL MARKING VIEW.

UNINSULATED COMPRESSION TERMINAL
MATERIAL: ALUMINUM TUBE

TO ORDER BURNDY® PRODUCTS CALL

UNITED STATES:
1-800-346-4175 (LONDONDERRY, NH)

CANADA:
1-800-361-6975 (QUEBEC)
1-800-387-6487 (ALL OTHER PROVINCES)

FOR PRODUCT INFO: http://www.burndy.com

HYLUG™

ITEM NO: NA

CAT. NO: YA30A-(SEE TABLE)

DRAWN BY:	E.S.K	7/20/72
CHECKER:	S.F.P	8/01/72
DSN APPVL:	R.B	8/02/72
MFG APPVL:	--	--
QA APPVL:	D.VARIO	8/19/95
MKT APPVL:	P.WERTHMAN	6/18/95
PROD FAM:	CM&R COMPRESSION	
PROJECT #:	--	
DOCUMENT TYPE:	Sales	
REL LEVEL:	Released	

SIZE: C

BURNDY

SCALE: 1:1

DRAWING NO: SD073935

REV: BA

SHEET 11 OF 24

REV: PE0200

DRAWING NO. SD073935

REV	DATE	DESCRIPTION	ECO	BY	C'H'K.
BA	2019-08-13 00:00:00 EDT	UPDATED AS PER MARKUP	51953	YR	SS

CATALOG NUMBER 3 / 6	CONDUCTOR SIZE: ALUMINUM	CONDUCTOR SIZE: COPPER	STUD SIZE	NO. OF. HOLES	B	C	D	E	H	∅K	L	N	O.D.	(T)	INFORMATION: PLATING	BARREL LETTERING INFORMATION 13
YA31A1	350 Kcmil CLASS B CONCENTRIC COMPRESSED COMPACT SIW 250 Kcmil CCA DLO (399/22)	350 Kcmil CLASS B,C CONCENTRIC COMPRESSED COMPACT	1/2	1	1.85 [47]	1.52 [39]	1.37 [35]	--	--	.56 [14]	4.33 [110]	.63 [16]	1.11 [28]	.39 [10]	TIN 3	FIG. 1
YA31A2															NONE	FIG. 2
YA31A3			1/2	2	1.85 [47]	1.52 [39]	3.11 [79]	1.75 [44]	--	.56 [14]	6.07 [154]	.63 [16]		.39 [10]	TIN 3	FIG. 1
YA31A4															NONE	FIG. 2
YA31A5			3/8		1.85 [47]	1.52 [39]	1.89 [48]	1.00 [25]	--	.44 [11]	4.85 [123]	.44 [11]		.39 [10]	TIN 3	FIG. 1
YA31A5NT119			3/8		1.85 [47]	1.00 [25]	1.89 [48]	1.00 [25]	--	.44 [11]	4.85 [123]	.44 [11]		.39 [10]	TIN 3	FIG. 2
YA31A5NT100															NONE	FIG. 2
YA31A6			3/8	1	1.85 [47]	1.52 [39]	.89 [23]	--	--	.44 [11]	3.85 [98]	.44 [11]		.39 [10]	TIN 3	FIG. 1
YA31A9NT100			3/8		1.85 [47]	1.00 [25]	1.89 [48]	--	--	.44 [11]	4.85 [123]	.44 [11]		.39 [10]	TIN 3	FIG. 2
YA31A12			5/8		1.85 [47]	1.52 [39]	1.37 [35]	--	--	.65 [17]	4.33 [110]	.63 [16]		.39 [10]	TIN 3	FIG. 1
YA31A190			1/2		1.85 [47]	1.52 [39]	1.37 [35]	--	3.74 [95]	.56 [14]	2.12 [54]	.63 [16]		.39 [10]	TIN 3	FIG. 1
YA31A390			1/2	2	1.85 [47]	1.52 [39]	3.11 [79]	1.75 [44]	3.74 [95]	.56 [14]	3.87 [98]	.63 [16]		.39 [10]	TIN 3	FIG. 2

COLOR CODE	DIE INFORMATION: DIE INDEX	DIE INFORMATION: TYPE	BURNDY® INSTALLATION TOOLING (#CRIMPS): MECHANICAL: OUR840	MECHANICAL: MD6	HYDRAULIC: 10 / 9 Y34A Y34B	HYDRAULIC: 9 Y35, Y39 Y750 PAT750	HYDRAULIC: 9 / 8 Y46	HYDRAULIC: 9 / 7 Y45	HYDRAULIC: Y48BH	HYDRAULIC: Y60	DIELESS (#CRIMPS): MECHANICAL	DIELESS (#CRIMPS): HYDRAULIC	STRIP LENGTH
BROWN	299	BROWN DIE SET	--	W31ART (4)	--	U31ART (2)	U31ART (2)	U31ART (2)	C31ART (1)	--	--	Y81KFT (3) PAT81KFT (3) Y644 (1) PAT644 (1) Y444 (1) PAT444 (1)	2 1/8"
		NEST INDENTOR	--	--	--	--	P35D(1) P48PR-1	--	C35D(1) Y48PR-1	--			

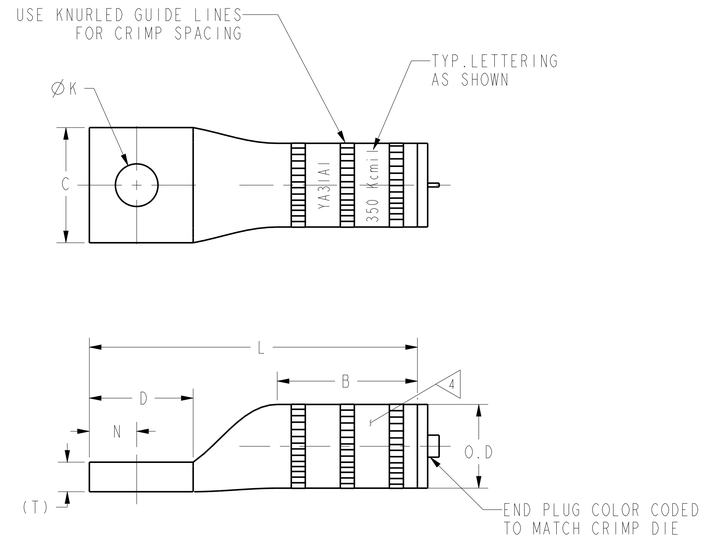

1- HOLE DESIGN

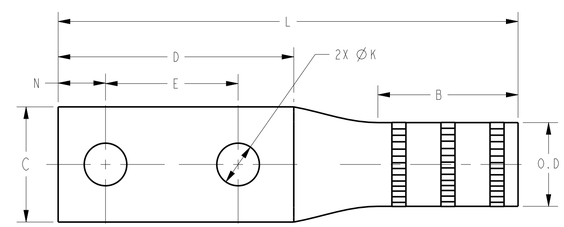

2- HOLE DESIGN

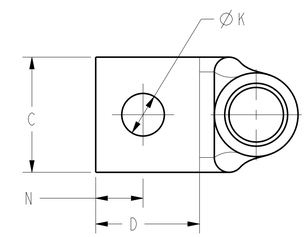

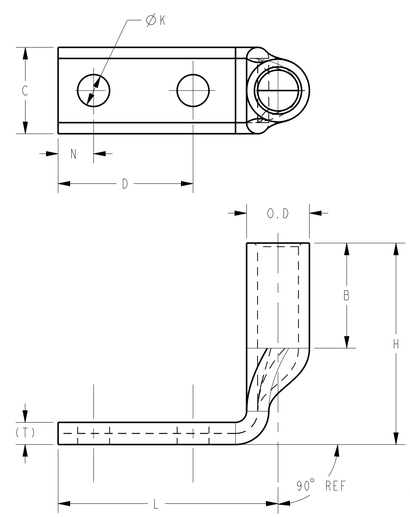

2- HOLE 90° DESIGN

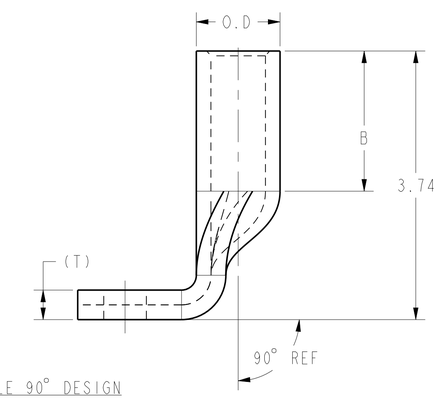

1- HOLE 90° DESIGN

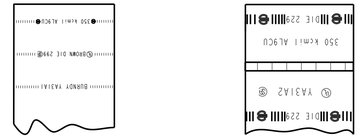

FIG. 1 FIG. 2

DEVELOPED LETTERING VIEWS 13

NOTES:

1. ALL HYLUGS™ ACCOMMODATE U.S. STANDARD WASHERS.
2. REMOVE ALL EXCESS PENETROX™ FROM CONNECTOR AND ADJACENT CONDUCTOR PRIOR TO TAPING.
3. UL LISTED AND CSA CERTIFIED WIRE CONNECTORS. RATED 90 C (AL9CU) FOR USE WITH COPPER OR ALUMINUM CONDUCTOR. APPROVAL APPLY TO TIN PLATED CONNECTORS ONLY.
4. CONNECTOR BARRELS PREFILLED WITH PENETROX™ .
5. DIMENSIONS IN BRACKETS [ ] ARE IN MILLIMETERS ROUNDED OFF TO THE NEAREST MILLIMETER , UNLESS OTHERWISE NOTED, AND ARE FOR REFERENCE ONLY.
6. ADD SUFFIX "DT" TO ORDER LUGS WITH CRIMP BARREL SEALED AIR TIGHT INSIDE THE TRANSITION.
7. CATALOG #PT6515 ADAPTOR IS REQUIRED TO USE "U" DIES IN Y45 SERIES TOOLS.
8. CATALOG #PUADP-1 ADAPTOR IS REQUIRED TO USE "U" DIES IN Y46 SERIES TOOLS.
9. Y35P3 INDENTOR ADAPTOR REQUIRED FOR "Y34PR" TYPE INDENTORS.
10. FOR USE BY CUSTOMERS THAT HAVE THIS HYPRESS™ .NO NEW HYPRESSES™ ARE BEING PROCESSED.
11. UL LISTED WITH DLO COPPER CLAD ALUMINUM CONDUCTOR USING Y644 AND Y444 TOOLS ONLY.
12. ADD SUFFIX "U" TO ORDER LUGS WITH UNDRILLED TONGUE.
13. ENLARGED BARREL MARKING VIEWS.

UNINSULATED COMPRESSION TERMINAL
MATERIAL: ALUMINUM TUBE

TO ORDER BURNDY® PRODUCTS CALL
UNITED STATES
1-800-346-4175 (LONDONDERRY, NH)
CANADA:
1-800-361-6975 (QUEBEC)
1-800-387-6487 (ALL OTHER PROVINCES)
FOR PRODUCT INFO: http://www.burndy.com

HYLUG ™

ITEM NO:	N/A	
CAT. NO:	YA31A-(SEE TABLE)	
DRAWN BY:	E.S.K	7/21/72
CHECKER:	S.F.P	8/01/72
DSN APPVL:	R.B	8/02/72
MFG APPVL:	--	--
QA APPVL:	D.VARIO	6/18/95
MKT APPVL:	P.WERTHMAN	6/18/95
PROD FAM:	CM&R COMPRESSION	
PROJECT #:	--	
DOCUMENT TYPE:	Sales	
REL LEVEL:	Released	

BURNDY

SCALE: 1:1

SIZE	DRAWING NO	REV
D	SD073935	BA
	SHEET 12 OF 24	

REV: PE0200

DRAWING NO.
SD073935

REV	DATE	DESCRIPTION	ECO	BY	C'H'K.
BA	2019-08-13 00:00:00 EDT	UPDATED AS PER MARKUP	51953	YR	SS

CATALOG NUMBER <3> <6>	CONDUCTOR SIZE		CONNECTOR DIMENSIONS-LINEAR MEASURE IN,[mm] <5>											INFORMATION	
	ALUMINUM	COPPER	STUD SIZE	NO.OF. HOLES	B	C	D	E	Ø K	L	N	O.D	(T)	PLATING	
YA32A1	400 kcmil CLASS B CONCENTRIC COMPRESSED COMPACT SIW	400 kcmil CLASS B,C CONCENTRIC COMPRESSED COMPACT	5/8	1	2.26 [57]	1.62 [41]	1.88 [48]	--	.69 [18]	4.92 [125]	.88 [22]	1.19 [30]	.43 [11]	TIN	<3>
YA32A2														NONE	
YA32A6			1/2		2.26 [57]	1.62 [41]	1.88 [48]	--	.56 [14]	4.92 [125]	.88 [22]		.43 [11]	TIN	<3>
YA32A3			1/2	2	2.26 [57]	1.62 [41]	3.11 [79]	1.75 [44]	.56 [14]	6.15 [156]	.63 [16]		.43 [11]	TIN	<3>
YA32A4														NONE	
YA32A5			3/8		2.26 [57]	1.62 [41]	1.89 [48]	1.00 [25]	.44 [11]	4.93 [125]	.44 [11]		.43 [11]	TIN	<3>
YA32A7							2.64 [67]	1.75 [44]		5.68 [144]					

COLOR CODE	DIE INFORMATION		BURNDY® INSTALLATION TOOLING (#CRIMPS)								DIELESS (#CRIMPS)		STRIP LENGTH
			MECHANICAL		HYDRAULIC								
	DIE INDEX	TYPE	OUR840	MD6	<10> <9> Y34A Y34B	<9> Y35,Y39 Y750 PAT750	<9> <8> Y46	<9> <7> Y45	Y48BH	Y60	MECHANICAL	HYDRAULIC	
GREEN	472	GREEN DIE SET	--	--	--	U32ART (4)	U32ART (4)	U32ART (4)	C32AR (2)	L32ART (2)	--	Y81KFT (4) PAT81KFT (4) Y644 (1) PAT644 (1) Y444 (1) PAT444 (1)	2 1/2"
		NEST INDENTOR	--	--	--	--	P35D(1) P48PR-1	--	C35D(1) Y48PR-1	--			

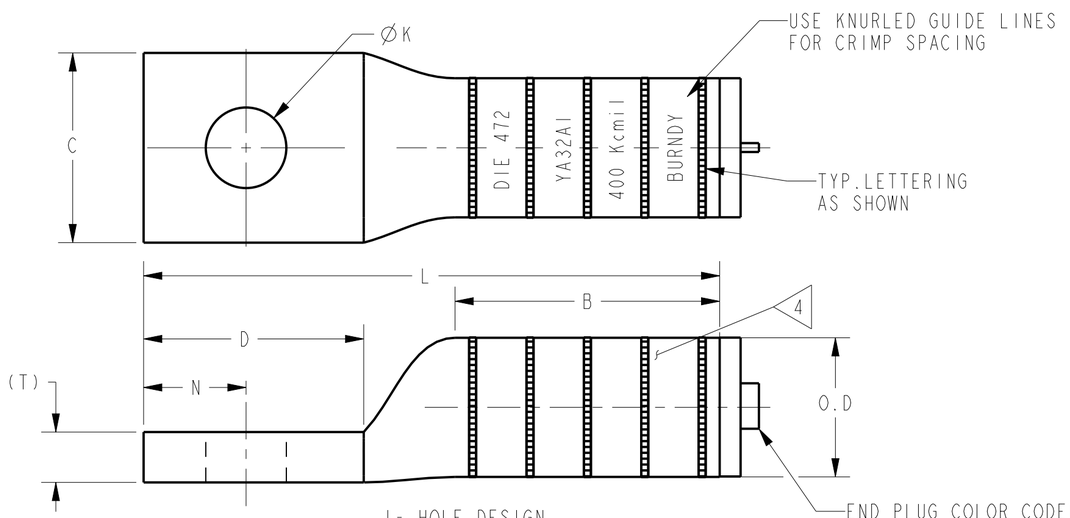

1- HOLE DESIGN

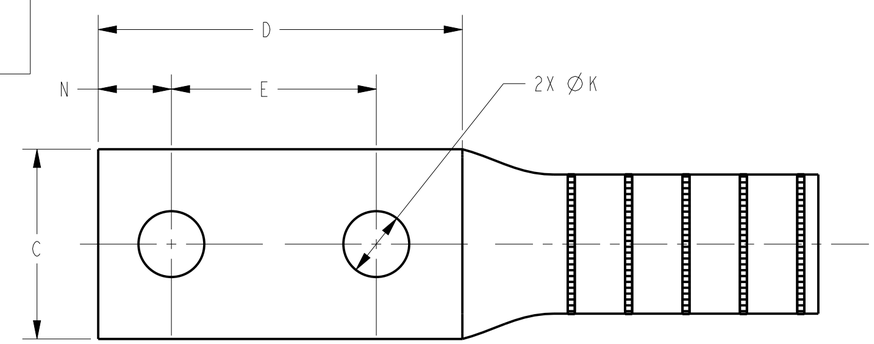

2- HOLE DESIGN

NOTES:

1. ALL HYLUGS™ ACCOMMODATE U.S. STANDARD WASHERS

2. REMOVE ALL EXCESS PENETROX™ FROM CONNECTOR AND ADJACENT CONDUCTOR PRIOR TO TAPING.

<3> UL LISTED AND CSA CERTIFIED WIRE CONNECTORS. RATED 90 C (AL9CU) FOR USE WITH COPPER OR ALUMINUM CONDUCTOR. APPROVAL APPLY TO TIN PLATED CONNECTORS ONLY.

<4> CONNECTOR BARRELS PREFILLED WITH PENETROX™

<5> DIMENSIONS IN BRACKETS [ ] ARE IN MILLIMETERS ROUNDED OFF TO THE NEAREST MILLIMETER , UNLESS OTHERWISE NOTED,AND ARE FOR REFERENCE ONLY.

<6> ADD SUFFIX "DT" TO ORDER LUGS WITH CRIMP BARREL SEALED AIR TIGHT INSIDE THE TRANSITION.

<7> CATALOG #PT6515 ADAPTOR IS REQUIRED TO USE "U" DIES IN Y45 SERIES TOOLS.

<8> CATALOG #PUADP-1 ADAPTOR IS REQUIRED TO USE "U" DIES IN Y46 SERIES TOOLS.

<9> Y35P3 INDENTOR ADAPTOR REQUIRED FOR "Y34PR" TYPE INDENTORS.

<10> FOR USE BY CUSTOMERS THAT HAVE THIS HYPRESS™ .NO NEW HYPRESSES™ ARE BEING PROCESSED.

11 ADD SUFFIX "U" TO ORDER LUGS WITH UNDRILLED TONGUE.

UNINSULATED COMPRESSION TERMINAL
MATERIAL: ALUMINUM TUBE

TO ORDER BURNDY® PRODUCTS CALL

UNITED STATES:
1-800-346-4175 (LONDONDERRY, NH)

CANADA:
1-800-361-6975 (QUEBEC)
1-800-387-6487 (ALL OTHER PROVINCES)

FOR PRODUCT INFO: http://www.burndy.com

HYLUG™

ITEM NO: NA

CAT. NO: YA32A-(SEE TABLE)

DRAWN BY:	E.S.K	7/21/72
CHECKER:	S.F.P	8/01/72
DSN APPVL:	R.B	8/02/72
MFG APPVL:	--	--
QA APPVL:	D.VARIO	6/18/95
MKT APPVL:	P.WERTHMAN	6/18/95
PROD FAM:	CM&R COMPRESSION	
PROJECT #:	--	
DOCUMENT TYPE:	Sales	
REL LEVEL:	Released	

SIZE: C

BURNDY

SCALE: 1:1

DRAWING NO: SD073935

REV: BA

SHEET 13 OF 24

REV: PE0200

DRAWING NO. SD073935

REV	DATE	DESCRIPTION	ECO	BY	C'H'K.
BA	2019-08-13 00:00:00 EDT	UPDATED AS PER MARKUP	51953	YR	SS

CATALOG NUMBER <3 <8	CONDUCTOR SIZE ALUMINUM	CONDUCTOR SIZE COPPER	CONNECTOR DIMENSIONS-LINEAR MEASURE IN,[mm] <5 STUD SIZE	NO.OF. HOLES	B	C	D	E	H	ØK	L	N	O.D	(T)	INFORMATION PLATING
YA34A1	500 kcmil CLASS B CONCENTRIC COMPRESSED COMPACT SIW 350 Kcmil CCA DLO (551/22)	500 kcmil CLASS B,C CONCENTRIC COMPRESSED COMPACT	5/8	1	2.34 [59]	1.80 [46]	1.91 [49]	--	--	.69 [18]	5.56 [141]	.88 [22]	1.32 [34]	.46 [12]	TIN <3
YA34A2															NONE
YA34A7			1/2		2.34 [59]	1.80 [46]	1.37 [35]	--		.56 [14]	5.02 [128]	.63 [16]		.46 [12]	TIN <3
YA34A3 <7			1/2	2	2.34 [59]	1.62 [41]	3.15 [80]	1.75 [44]		.56 [14]	6.80 [173]	.63 [16]		.46 [12]	TIN <3
YA34A4 <7															NONE
YA34A5			3/8		2.34 [59]	1.80 [46]	1.89 [48]	1.00 [25]		.44 [11]	5.54 [141]	.44 [11]		.46 [12]	TIN <3
YA34A11			3/8		2.34 [59]	1.80 [46]	2.27 [58]	1.38 [35]		.44 [11]	5.92 [150]	.44 [11]		.46 [12]	TIN <3
YA34A6			1/2		2.34 [59]	1.80 [46]	3.15 [80]	1.75 [44]		.56 [14]	6.80 [173]	.63 [16]		.46 [12]	NONE <6
YA34A9			3/8	1	2.34 [59]	1.80 [46]	1.18 [48]	--		.44 [11]	4.83 [115]	.44 [11]		.46 [12]	TIN <3
YA34A390			1/2	2	2.34 [59]	1.62 [41]	3.15 [80]	1.75 [44]	4.59 [117]	.56 [14]	4.09 [104]	.63 [16]		.46 [12]	TIN <3
YA34A8			1/2		2.34 [59]	1.80 [46]	3.15 [80]	1.75 [44]	--	.56 [14]	6.77 [172]	.63 [16]		.46 [12]	TIN <3
YA34A10			3/8		2.34 [59]	1.80 [46]	2.64 [67]	1.75 [44]	--	.44 [11]	6.29 [160]	.44 [11]		.46 [12]	NONE

COLOR CODE	DIE INFORMATION: DIE INDEX	DIE INFORMATION: TYPE	BURNDY® INSTALLATION TOOLING (#CRIMPS) MECHANICAL: OUR840	MECHANICAL: MD6	HYDRAULIC: <12 <11 Y34A Y34B	HYDRAULIC: <11 Y35,Y39 Y750 PAT750	HYDRAULIC: <11 <10 Y46	HYDRAULIC: <11 <9 Y45	HYDRAULIC: Y48BH	HYDRAULIC: Y60	DIELESS (#CRIMPS) MECHANICAL	DIELESS (#CRIMPS) HYDRAULIC	STRIP LENGTH
PINK	300	PINK DIE SET	--	--	--	U34ART (4)	U34ART (4)	U34ART (4)	C34AR (2)	L34ART (2)	--	Y81KFT (4) PAT81KFT (4) Y644 (1) PAT644 (1) Y444 (1) PAT444 (1)	2 5/8"
		NEST INDENTOR	--	--	--	--	P39D (1) P48PR-1	--	C39D(1) Y48PR-1	--			

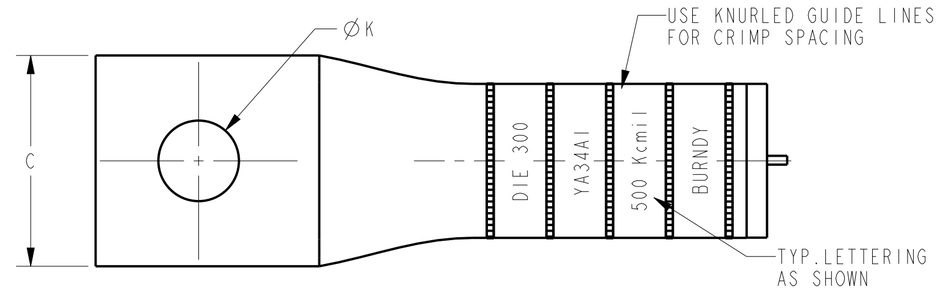

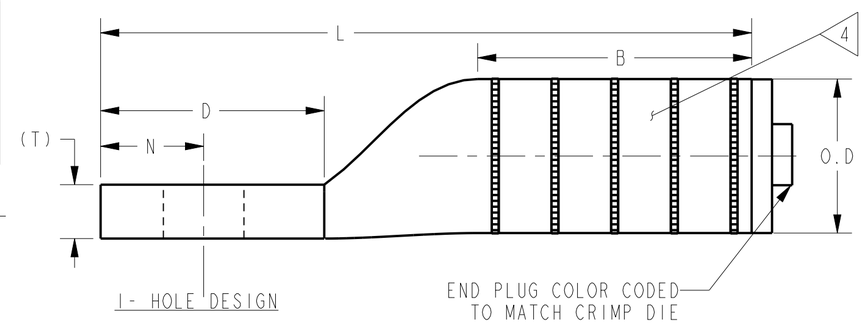

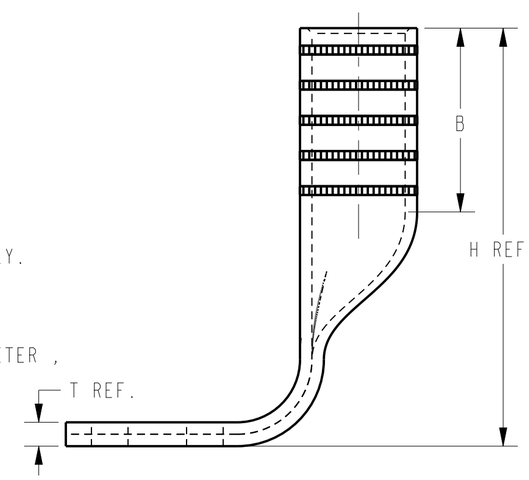

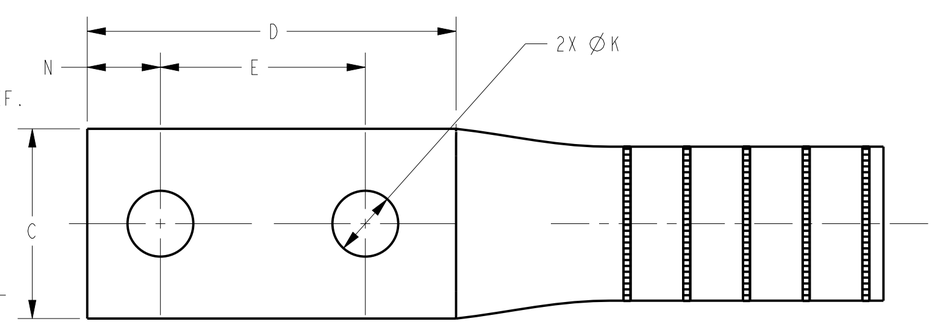

2- HOLE DESIGN

UNINSULATED COMPRESSION TERMINAL
MATERIAL: ALUMINUM TUBE

NOTES:

1. ALL HYLUGS™ ACCOMMODATE U.S. STANDARD WASHERS
2. REMOVE ALL EXCESS PENETROX™ FROM CONNECTOR AND ADJACENT CONDUCTOR PRIOR TO TAPING.
3. >UL LISTED AND CSA CERTIFIED WIRE CONNECTORS. RATED 90 C (AL9CU) FOR USE WITH COPPER OR ALUMINUM CONDUCTOR. APPROVAL APPLY TO TIN PLATED CONNECTORS ONLY.
4. >CONNECTOR BARRELS PREFILLED WITH PENETROX™
5. >DIMENSIONS IN BRACKETS [ ] ARE IN MILLIMETERS ROUNDED OFF TO THE NEAREST MILLIMETER , UNLESS OTHERWISE NOTED,AND ARE FOR REFERENCE ONLY.
6. >NO-OX-ID "A" COATED TO PREVENT FORMATION OF OXIDATION
7. >CAN BE MOUNTED SIDE BY SIDE ON 4 -HOLE NEMA PAD.
8. >ADD SUFFIX "DT" TO ORDER LUGS WITH CRIMP BARREL SEALED AIR TIGHT INSIDE THE TRANSITION.
9. >CATALOG #PT6515 ADAPTOR IS REQUIRED TO USE "U" DIES IN Y45 SERIES TOOLS.
10. >CATALOG #PUADP-1 ADAPTOR IS REQUIRED TO USE "U" DIES IN Y46 SERIES TOOLS.
11. >Y35P3 INDENTOR ADAPTOR REQUIRED FOR "Y34PR" TYPE INDENTORS.
12. >FOR USE BY CUSTOMERS THAT HAVE THIS HYPRESS™ .NO NEW HYPRESSES™ ARE BEING PROCESSED.
13. UL LISTED WITH DLO COPPER CLAD ALUMINUM CONDUCTOR USING Y644 AND Y444 TOOLS ONLY.
14. ADD SUFFIX "U" TO ORDER LUGS WITH UNDRILLED TONGUE.

TO ORDER BURNDY® PRODUCTS CALL

UNITED STATES:
1-800-346-4175 (LONDONDERRY, NH)

CANADA:
1-800-361-6975 (QUEBEC)
1-800-387-6487 (ALL OTHER PROVINCES)

FOR PRODUCT INFO: http://www.burndy.com

HYLUG™

ITEM NO: NA		
CAT. NO: YA34A-(SEE TABLE)		
DRAWN BY: E.S.K	7/21/72	BURNDY
CHECKER: S.F.P	8/01/72	
DSN APPVL: R.B	8/02/72	
MFG APPVL: --	--	
QA APPVL: D.VARIO	6/18/95	
MKT APPVL: P.WERTHMAN	6/18/95	SCALE: 1:1
PROD FAM: CM&R COMPRESSION		DRAWING NO / REV
PROJECT #: --	SIZE	SD073935 / BA
DOCUMENT TYPE: Sales	C	
REL LEVEL: Released		SHEET 14 OF 24

REV: PE0200

DRAWING NO. SD073935

REV	DATE	DESCRIPTION	ECO	BY	C'H'K.
BA	2019-08-13 00:00:00 EDT	UPDATED AS PER MARKUP	51953	YR	SS

CATALOG NUMBER <3> <8>	CONDUCTOR SIZE		CONNECTOR DIMENSIONS-LINEAR MEASURE IN,[mm] <5>											INFORMATION	BARREL LETTERING INFORMATION <15>
	ALUMINUM	COPPER	STUD SIZE	NO.OF. HOLES	B	C	D	E	ØK	L	N	O.D	(T)	PLATING	
YA36A1	600 kcmil CLASS B CONCENTRIC COMPRESSED COMPACT SIW 500 Kcmil CCA DLO (779/22)	600 kcmil CLASS B,C CONCENTRIC COMPRESSED COMPACT	5/8	1	2.47 [63]	1.97 [50]	1.88 [48]	--	.69 [18]	5.82 [148]	.88 [22]	1.44 [37]	.52 [13]	TIN	FIG. 1 <3>
YA36A2														NONE	FIG. 1
YA36A3 <6>			1/2	2	2.47 [63]	1.62 [41]	3.15 [80]	1.75 [44]	.56 [14]	7.09 [180]	.63 [16]		.52 [13]	TIN	FIG. 2 <3>
YA36A4 <6>														NONE	FIG. 1
YA36A3NT131 <6>			1/2	2	2.47 [63]	1.31 [33]	3.15 [80]	1.75 [44]	.56 [14]	7.09 [180]	.63 [16]		.52 [13]	TIN	FIG. 1 <3>
YA36A5			3/8	2	2.47 [63]	1.97 [50]	1.89 [48]	1.00 [25]	.44 [11]	5.64 [143]	.69 [18]		.52 [13]	TIN	FIG. 1 <3>
YA36A8			1/2	1	2.47 [63]	1.97 [50]	1.69 [43]	--	.56 [14]	5.64 [143]	.69 [18]		.52 [13]	TIN	FIG. 1 <3>
YA36A10			5/8	1	2.47 [63]	1.97 [50]	1.88 [48]	--	.65 [17]	5.82 [148]	.88 [22]		.52 [13]	TIN	FIG. 1 <3>
YA36A17			1/2	2	2.47 [63]	1.97 [50]	3.15 [80]	1.75 [44]	.56 [14]	7.06 [179]	.63 [16]		.52 [13]	TIN	FIG. 2 <3>

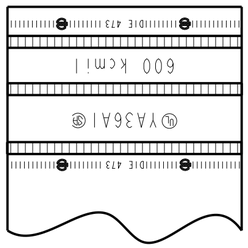

FIG. 1

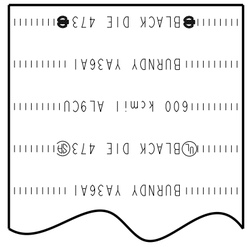

FIG. 2

BARREL LETTERING VIEW <15>

COLOR CODE	DIE INFORMATION		BURNDY® INSTALLATION TOOLING (#CRIMPS)								DIELESS (#CRIMPS)		STRIP LENGTH
			MECHANICAL		HYDRAULIC								
	DIE INDEX	TYPE	OUR840	MD6	<12> Y34A <11> Y34B	<11> Y35, Y39 Y750 PAT750	<11> <10> Y46	<11> <9> Y45	Y48BH	Y60	MECHANICAL	HYDRAULIC	
BLACK	473	BLACK DIE SET	--	--	--	U36ART (4)	U36ART (4)	U36ART (4)	C36AR (2)	L36ART (2)	--	Y81KFT (4) PAT81KFT (4) Y644 (1) PAT644 (1) Y444 (1) PAT444 (1)	2 7/8"
		NEST INDENTOR	--	--	--	--	P44D(2) P48PR-1	--	C44D(2) Y48PR-1	--			

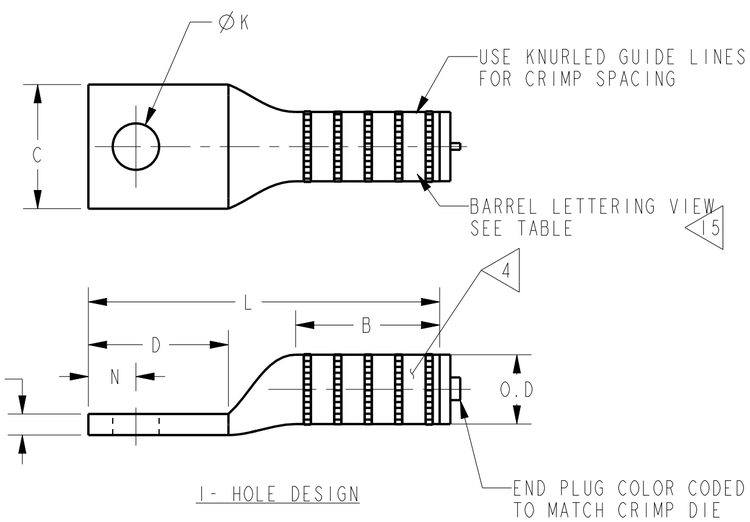

1- HOLE DESIGN

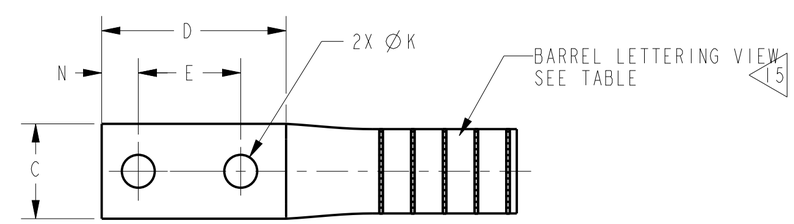

2- HOLE DESIGN

UNINSULATED COMPRESSION TERMINAL
MATERIAL: ALUMINUM TUBE

NOTES:

1. ALL HYLUGS™ ACCOMMODATE U.S. STANDARD WASHERS
2. REMOVE ALL EXCESS PENETROX™ FROM CONNECTOR AND ADJACENT CONDUCTOR PRIOR TO TAPING.
3. <3> UL LISTED AND CSA CERTIFIED WIRE CONNECTORS. RATED 90 C (AL9CU) FOR USE WITH COPPER OR ALUMINUM CONDUCTOR. APPROVAL APPLY TO TIN PLATED CONNECTORS ONLY.
4. <4> CONNECTOR BARRELS PREFILLED WITH PENETROX™
5. <5> DIMENSIONS IN BRACKETS [ ] ARE IN MILLIMETERS ROUNDED OFF TO THE NEAREST MILLIMETER , UNLESS OTHERWISE NOTED,AND ARE FOR REFERENCE ONLY.
6. <6> CAN BE MOUNTED SIDE BY SIDE ON FOUR HOLE NEMA PAD
7. <7> THE YA39A12 IS NOT UL LISTED OR CSA CERTIFIED
8. <8> ADD SUFFIX "DT" TO ORDER LUGS WITH CRIMP BARREL SEALED AIR TIGHT INSIDE THE TRANSITION.
9. <9> CATALOG #PT6515 ADAPTOR IS REQUIRED TO USE "U" DIES IN Y45 SERIES TOOLS.
10. <10> CATALOG #PUADP-1 ADAPTOR IS REQUIRED TO USE "U" DIES IN Y46 SERIES TOOLS.
11. <11> Y35P3 INDENTOR ADAPTOR REQUIRED FOR "Y34PR" TYPE INDENTORS.
12. <12> FOR USE BY CUSTOMERS THAT HAVE THIS HYPRESS™ .NO NEW HYPRESSES™ ARE BEING PROCESSED.
13. UL LISTED WITH DLO COPPER CLAD ALUMINUM CONDUCTOR USING Y644 AND Y444 TOOLS ONLY.
14. ADD SUFFIX "U" TO ORDER LUGS WITH UNDRILLED TONGUE.
15. <15> ENLARGED BARREL MARKING VIEW.

TO ORDER BURNDY® PRODUCTS CALL

UNITED STATES:
1-800-346-4175 (LONDONDERRY, NH)

CANADA:
1-800-361-6975 (QUEBEC)
1-800-387-6487 (ALL OTHER PROVINCES)

FOR PRODUCT INFO: http://www.burndy.com

HYLUG™

ITEM NO: NA

CAT. NO: YA36A-(SEE TABLE)

DRAWN BY:	E.S.K	7/21/72
CHECKER:	S.F.P	8/01/72
DSN APPVL:	R.B	8/02/72
MFG APPVL:	--	--
QA APPVL:	D.VARIO	6/18/95
MKT APPVL:	P.WERTHMAN	6/18/95
PROD FAM:	CM&R COMPRESSION	
PROJECT #:	--	
DOCUMENT TYPE:	Sales	
REL LEVEL:	Released	

SIZE: C

BURNDY

SCALE: 1:1

DRAWING NO: SD073935

REV: BA

SHEET 15 OF 24

REV: PE0200

DRAWING NO. SD073935

REV	DATE	DESCRIPTION	ECO	BY	C'H'K.
BA	2019-08-13 00:00:00 EDT	UPDATED AS PER MARKUP	51953	YR	SS

CATALOG NUMBER <3><8>	CONDUCTOR SIZE		CONNECTOR DIMENSIONS-LINEAR MEASURE IN,[mm] <5>											INFORMATION
	ALUMINUM	COPPER	STUD SIZE	NO.OF. HOLES	B	C	D	E	ØK	L	N	O.D	(T)	PLATING
YA39A1 <15>	700 -750 kcmil CLASS B CONCENTRIC COMPRESSED COMPACT SIW 900 kcmil CLASS B <13> COMPACT ONLY 600 Kcmil CCA DLO (925/22)	700 -750 kcmil CLASS B,C CONCENTRIC COMPRESSED COMPACT	1/2	1	2.46 [62]	2.05 [52]	1.34 [34]	--	.56 [14]	5.26 [134]	.63 [16]	1.46 [37]	.43 [11]	TIN <3>
YA39A2														NONE
YA39A3 <15>			5/8	1	2.46 [62]	2.05 [52]	1.88 [48]	--	.69 [18]	5.80 [147]	.88 [22]		.43 [11]	TIN <3>
YA39A4														NONE
YA39A5 <15><6>			1/2	2	2.46 [62]	1.62 [41]	3.15 [80]	1.75 [44]	.56 [14]	7.07 [180]	.63 [16]	1.46 [37]	.43 [11]	TIN <3>
YA39A6 <6>														NONE
YA39A7 <15>			3/8	2	2.46 [62]	2.05 [52]	1.89 [48]	1.00 [25]	.44 [11]	5.81 [148]	.44 [11]		.43 [11]	TIN <3>
YA39A12 <15><8>			1/2	2	2.46 [62]	1.62 [41]	6.33 [161]	1.75 [44]	.56 [14]	10.25 [260]	.63 [16]	1.46 [37]	.43 [11]	TIN <3>
YA39A13 <15>			1/2	2	2.46 [62]	2.05 [52]	3.15 [80]	1.75 [44]	.56 [14]	7.04 [179]	.63 [16]	1.46 [37]	.43 [11]	TIN <3>
YA39A34 <16>			3/4	1	2.46 [62]	2.05 [52]	2.19 [56]	--	.81 [21]	6.17 [157]	1.00 [25]	1.46 [37]	.43 [11]	TIN <3>

COLOR CODE	DIE INFORMATION		BURNDY INSTALLATION TOOLING (#CRIMPS)								DIELESS (#CRIMPS)		STRIP LENGTH
			MECHANICAL		HYDRAULIC								
	DIE INDEX	TYPE	OUR840	MD6	<12> Y34A <11> Y34B	<11> Y35,Y39 Y750 PAT750	<11> <10> Y46	<11> <9> Y45	Y48BH	Y60	MECHANICAL	HYDRAULIC	
YELLOW	936	YELLOW DIE SET	--	--	-- ®	U39ART-2 (4)	U39ART-2 (4)	U39ART-2 (4)	--	L39ART-2 (2)	--	Y81KFT (4) PAT81KFT (4) Y644 (1) PAT644 (1) Y444 (1) PAT444 (1)	2 7/8"
		NEST INDENTOR	--	--	--	--	--	--	--	--			

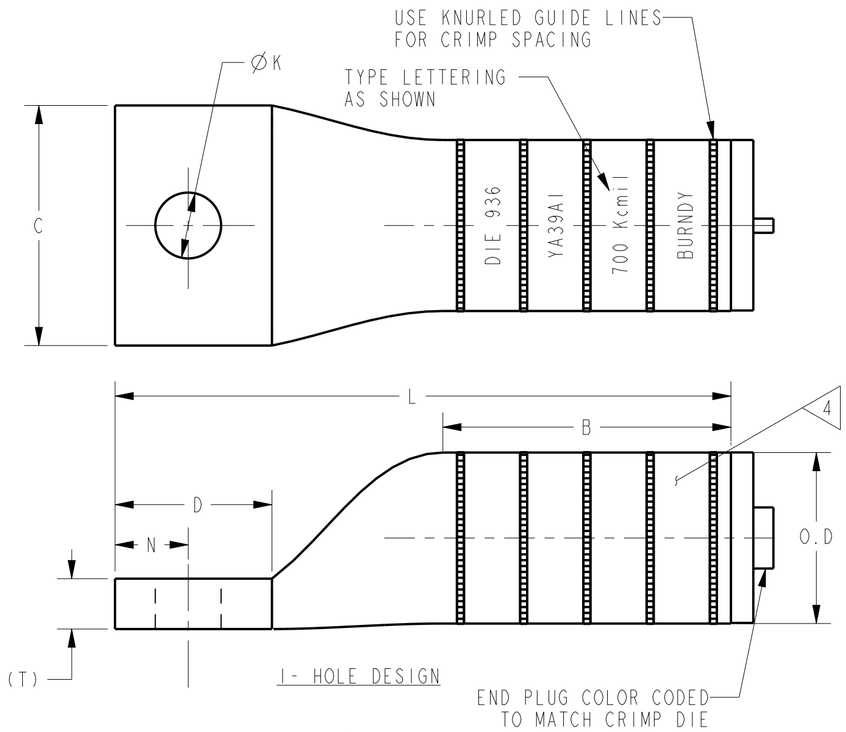

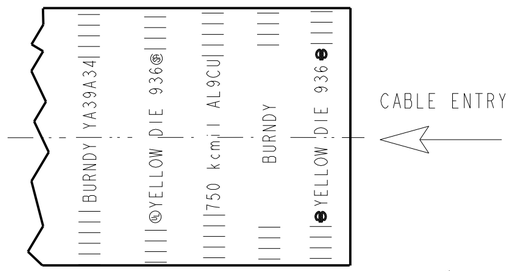

DEVELOPED LETTERING VIEW FOR YA39A34 <16>

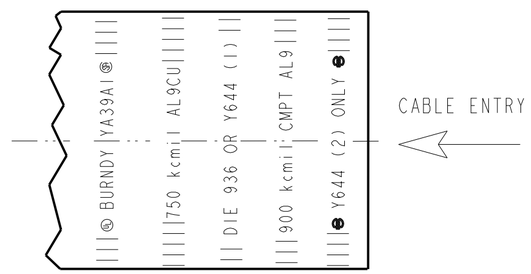

DEVELOPED LETTERING VIEW <15>

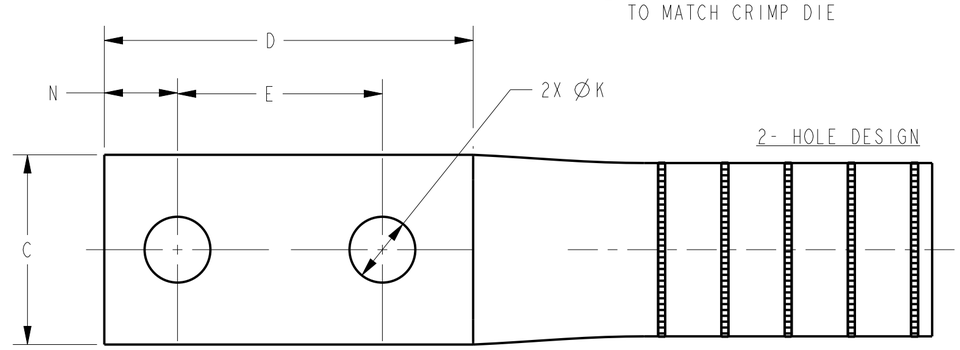

NOTES:

1. ALL HYLUGS™ ACCOMMODATE U.S. STANDARD WASHERS
2. REMOVE ALL EXCESS PENETROX™ FROM CONNECTOR AND ADJACENT CONDUCTOR PRIOR TO TAPING.
3. <3> UL LISTED AND CSA CERTIFIED WIRE CONNECTORS. RATED 90 C (AL9CU) FOR USE WITH COPPER OR ALUMINUM CONDUCTOR. APPROVAL APPLY TO TIN PLATED CONNECTORS ONLY.
4. <4> CONNECTOR BARRELS PREFILLED WITH PENETROX™
5. <5> DIMENSIONS IN BRACKETS [ ] ARE IN MILLIMETERS ROUNDED OFF TO THE NEAREST MILLIMETER , UNLESS OTHERWISE NOTED,AND ARE FOR REFERENCE ONLY.
6. <6> CAN BE MOUNTED SIDE BY SIDE ON FOUR HOLE NEMA PAD
7. <7> THE YA39A12 IS NOT UL LISTED OR CSA CERTIFIED
8. <8> ADD SUFFIX "DT" TO ORDER LUGS WITH CRIMP BARREL SEALED AIR TIGHT INSIDE THE TRANSITION.
9. <9> CATALOG #PT6515 ADAPTOR IS REQUIRED TO USE "U" DIES IN Y45 SERIES TOOLS.
10. <10> CATALOG #PUADP-1 ADAPTOR IS REQUIRED TO USE "U" DIES IN Y46 SERIES TOOLS.
11. <11> Y35P3 INDENTOR ADAPTOR REQUIRED FOR "Y34PR" TYPE INDENTORS.
12. <12> FOR USE BY CUSTOMERS THAT HAVE THIS HYPRESS™ . NO NEW HYPRESSES™ ARE BEING PROCESSED.
13. <13> USE PAT644, Y644, PAT444, OR Y444 TOOLING ONLY WHEN INSTALLING 900 KCMIL COMPACT AL. APPLY 2 CRIMPS.
14. UL LISTED WITH DLO COPPER CLAD ALUMINUM CONDUCTOR USING Y644 TOOLS ONLY.
15. <15> SEE DEVELOPED LETTERING VIEW FOR THESE CATALOGS.
16. <16> SEE DEVELOPED LETTERING VIEW FOR YA39A34.
17. ADD SUFFIX "U" TO ORDER LUGS WITH UNDRILLED TONGUE.

UNINSULATED COMPRESSION TERMINAL
MATERIAL: ALUMINUM TUBE

TO ORDER BURNDY® PRODUCTS CALL

UNITED STATES:
1-800-346-4175 (LONDONDERRY, NH)

CANADA:
1-800-361-6975 (QUEBEC)
1-800-387-6487 (ALL OTHER PROVINCES)

FOR PRODUCT INFO: http://www.burndy.com

HYLUG™

ITEM NO: NA

CAT. NO: YA39A-(SEE TABLE)

DRAWN BY:	E.S.K	7/21/72
CHECKER:	S.F.P	8/01/72
DSN APPVL:	R.B	8/02/72
MFG APPVL:	--	--
QA APPVL:	D.VARIO	6/18/95
MKT APPVL:	P.WERTHMAN	6/18/95
PROD FAM:	CM&R COMPRESSION	
PROJECT #:	--	
DOCUMENT TYPE:	Sales	
REL LEVEL:	Released	

SIZE: C

BURNDY

SCALE: 2:1

DRAWING NO: SD073935

REV: BA

SHEET 16 OF 24

REV: PE0200

DRAWING NO. SD073935

REV	DATE	DESCRIPTION	ECO	BY	C'H'K.
BA	2019-08-13 00:00:00 EDT	UPDATED AS PER MARKUP	51953	YR	SS

CATALOG NUMBER 3 9	CONDUCTOR SIZE ALUMINUM	CONDUCTOR SIZE COPPER	CONNECTOR DIMENSIONS-LINEAR MEASURE IN,[mm] 5 STUD SIZE	NO.OF. HOLES	B	C	D	E	ØK	L	N	O.D	(T)	INFORMATION PLATING
YA39AM1 7	700 -750 kcmil CLASS B CONCENTRIC COMPRESSED COMPACT SIW 14	700 -750 kcmil CLASS B,C CONCENTRIC COMPRESSED COMPACT	5/8	1	2.56 [65]	2.19 [56]	1.85 [47]	--	.69 [18]	6.04 [153]	.88 [22]	1.60 [41]	.57 [14]	TIN 3
YA39AM2 6 7			1/2	2	2.56 [65]	1.69 [43]	3.12 [79]	1.75 [44]	.56 [14]	7.31 [186]	.63 [16]	1.60 [41]	.57 [14]	TIN 3 16
YA39AM3 6 7	900 kcmil CLASS B COMPACT ONLY		1/2	2	2.56 [65]	1.69 [43]	3.88 [99]	1.75 [44]	.56 [14]	8.07 [205]	.63 [16]	1.60 [41]	.57 [14]	TIN 3

COLOR CODE	DIE INFORMATION: DIE INDEX	DIE INFORMATION: TYPE	BURNDY® INSTALLATION TOOLING (#CRIMPS) MECHANICAL: OUR840	MECHANICAL: MD6	HYDRAULIC: 13 12 Y34A Y34B	HYDRAULIC: 12 Y35,Y39 Y750 PAT750	HYDRAULIC: 12 11 Y46	HYDRAULIC: 12 10 Y45	HYDRAULIC: Y48BH	HYDRAULIC: Y60	DIELESS (#CRIMPS) MECHANICAL	DIELESS (#CRIMPS) HYDRAULIC	STRIP LENGTH
RED	301	RED DIESET	--	--	--	--	P39ART (4)	S39ART (4)	C39AR (4)	L39ART (4)	--	Y81KFT (4) PAT81KFT (4) Y644 (1) PAT644 (1) Y444 (1) PAT444 (1)	2 7/8"
		NEST INDENTOR	--	--	--	--	P45D(2) P48PR-1	--	C45D(2) Y48PR-1	--			

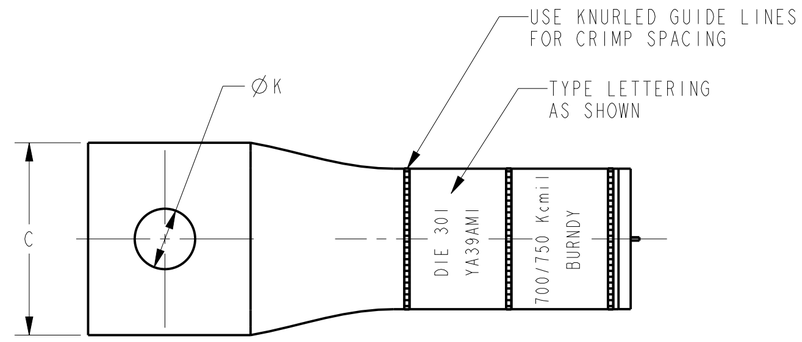

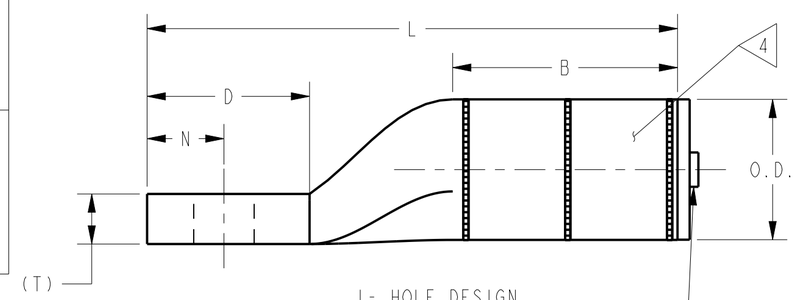

1- HOLE DESIGN

END PLUG COLOR CODED TO MATCH CRIMP DIE

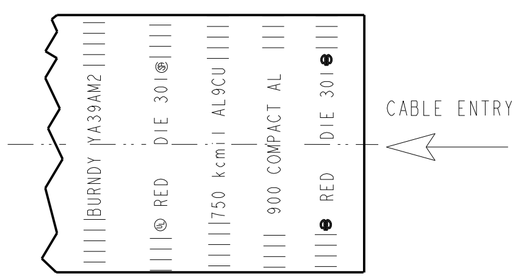

DEVELOPED LETTERING VIEW 16

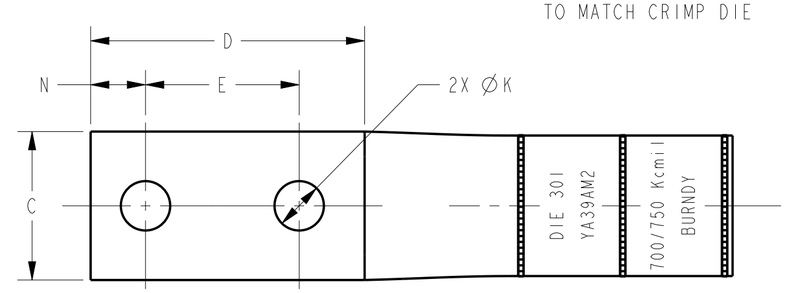

2- HOLE DESIGN

NOTES:

1. ALL HYLUGS™ ACCOMMODATE U.S.STANDARD WASHERS
2. REMOVE ALL EXCESS PENETROX™ FROM CONNECTOR AND ADJACENT CONDUCTOR PRIOR TO TAPING.
3. UL LISTED AND CSA CERTIFIED WIRE CONNECTORS. RATED 90 C (AL9CU) FOR USE WITH COPPER OR ALUMINUM CONDUCTOR. APPROVAL APPLY TO TIN PLATED CONNECTORS ONLY.
4. CONNECTOR BARRELS PREFILLED WITH PENETROX™
5. DIMENSIONS IN BRACKETS [ ] ARE IN MILLIMETERS ROUNDED OFF TO THE NEAREST MILLIMETER , UNLESS OTHERWISE NOTED,AND ARE FOR REFERENCE ONLY.
6. CAN BE MOUNTED SIDE BY SIDE ON FOUR HOLE NEMA PAD
7. USE ONLY WHEN CUSTOMER REQUIRES 1.600 O.D VARIATION FOR COMPATABILITY WITH OLD INSTALATION TOOLING ,FOR ALL OTHER APPLICATION USE C39-1 TUBING(1.460 O.D)
8. THE YA39A12 IS NOT UL LISTED OR CSA CERTIFIED
9. ADD SUFFIX "DT" TO ORDER LUGS WITH CRIMP BARREL SEALED AIR TIGHT INSIDE THE TRANSITION.
10. CATALOG #PT6515 ADAPTOR IS REQUIRED TO USE "U" DIES IN Y45 SERIES TOOLS.
11. CATALOG #PUADP-1 ADAPTOR IS REQUIRED TO USE "U" DIES IN Y46 SERIES TOOLS.
12. Y35P3 INDENTOR ADAPTOR REQUIRED FOR "Y34PR" TYPE INDENTORS.
13. FOR USE BY CUSTOMERS THAT HAVE THIS HYPRESS™ . NO NEW HYPRESSES™ ARE BEING PROCESSED.
14. USE PAT644, Y644, PAT444, OR Y444 TOOLING ONLY WHEN INSTALLING 900 KCMIL COMPACT AL. APPLY 2 CRIMPS.
15. ADD SUFFIX "U" TO ORDER LUGS WITH UNDRILLED TONGUE.
16. SEE DEVELOPED LETTERING VIEW FOR CATALOGUE YA39AM2

TO ORDER BURNDY® PRODUCTS CALL

UNITED STATES:
1-800-346-4175 (LONDONDERRY, NH)

CANADA:
1-800-361-6975 (QUEBEC)
1-800-387-6487 (ALL OTHER PROVINCES)

FOR PRODUCT INFO: http://www.burndy.com

HYLUG™

ITEM NO: NA

CAT. NO: YA39A-(SEE TABLE)

DRAWN BY:	E.S.K	7/21/72
CHECKER:	S.F.P	8/01/72
DSN APPVL:	R.B	8/02/72
MFG APPVL:	--	--
QA APPVL:	D.VARIO	6/18/95
MKT APPVL:	P.WERTHMAN	6/18/95
PROD FAM:	CM&R COMPRESSION	
PROJECT #:	--	
DOCUMENT TYPE:	Sales	
REL LEVEL:	Released	

SIZE: C

BURNDY

SCALE: 1:1

DRAWING NO: SD073935

REV: BA

SHEET 17 OF 24

REV: PE0200

DRAWING NO.
SD073935

REV	DATE	DESCRIPTION	ECO	BY	C'H'K.
BA	2019-08-13 00:00:00 EDT	UPDATED AS PER MARKUP	51953	YR	SS

CATALOG NUMBER (3) (6)	CONDUCTOR SIZE		CONNECTOR DIMENSIONS-LINEAR MEASURE IN,[mm] (5)												INFORMATION
	ALUMINUM	COPPER	STUD SIZE	NO.OF. HOLES	B	C	D	E	F	ØK	L	N	O.D	(T)	PLATING
YA40A1	800 kcmil CLASS B CONCENTRIC COMPRESSED COMPACT SIW	800 kcmil CLASS B,C CONCENTRIC COMPRESSED COMPACT	5/8	1	2.56 [65]	1.65 [42]	1.87 [47]	--	--	.69 [18]	6.12 [155]	.88 [22]	1.65 [42]	.60 [15]	TIN (3)
YA40A2						2.25 [57]									NONE
YA40A3			1/2	2	2.56 [65]	2.25 [57]	3.16 [80]	1.75 [44]	--	.56 [14]	7.41 [188]	.63 [16]		.60 [15]	TIN (3)
YA40A4															NONE

COLOR CODE	DIE INFORMATION		BURNDY® INSTALLATION TOOLING (#CRIMPS)								DIELESS (#CRIMPS)		STRIP LENGTH
			MECHANICAL		HYDRAULIC								
	DIE INDEX	TYPE	OUR840	MD6	(10)(9) Y34A Y34B	(9) Y35,Y39 Y750 PAT750	(9)(8) Y46	(9)(7) Y45	Y48BH	Y60	MECHANICAL	HYDRAULIC	
GRAY	474	GRAY DIE SET	--	--	--	--	P40ART (4)	S40ART (4)	C40AR (2)	L40ART (2)	--	Y644MBH (1) ONLY Y444 (1) PAT444 (1)	3"
		NEST INDENTOR	--	--	--	--	P45D(4) P48PR-1	--	C45D(2) Y48PR-1	--			

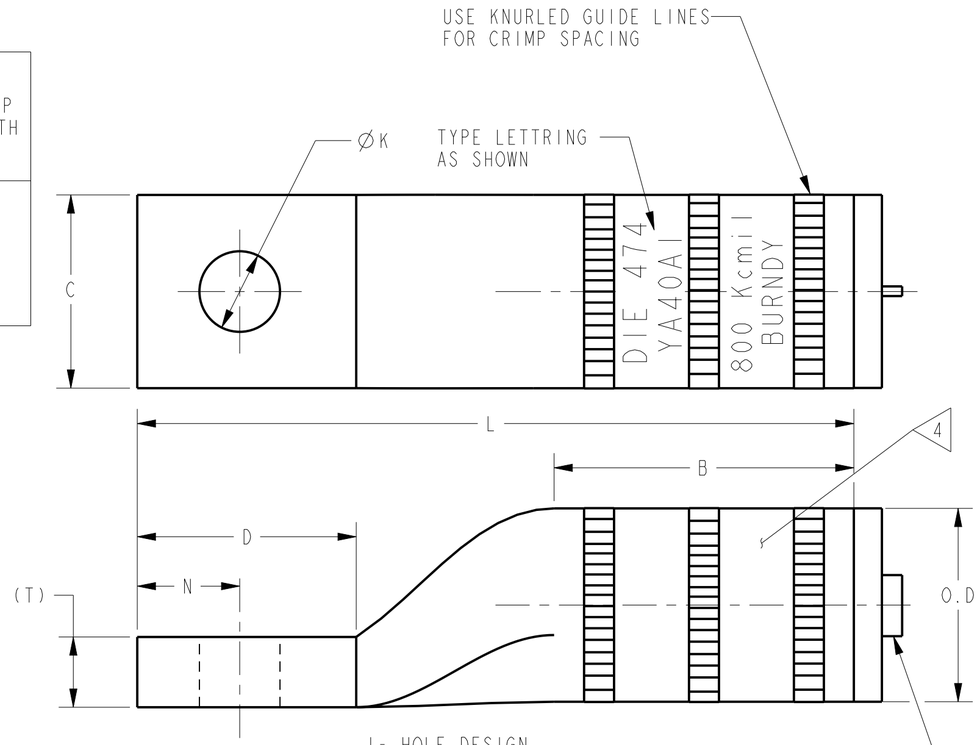

1- HOLE DESIGN

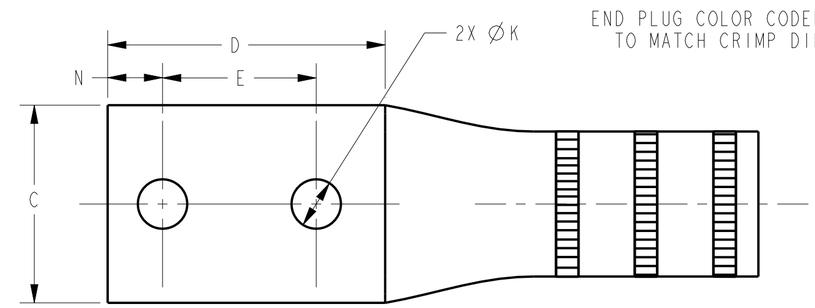

2- HOLE DESIGN

UNINSULATED COMPRESSION TERMINAL
MATERIAL: ALUMINUM TUBE

NOTES:

1. ALL HYLUGS™ ACCOMMODATE U.S. STANDARD WASHERS
2. REMOVE ALL EXCESS PENETROX™ FROM CONNECTOR AND ADJACENT CONDUCTOR PRIOR TO TAPING.
3. UL LISTED AND CSA CERTIFIED WIRE CONNECTORS. RATED 90 C (AL9CU) FOR USE WITH COPPER OR ALUMINUM CONDUCTOR. APPROVAL APPLY TO TIN PLATED CONNECTORS ONLY.
4. CONNECTOR BARRELS PREFILLED WITH PENETROX™
5. DIMENSIONS IN BRACKETS [ ] ARE IN MILLIMETERS ROUNDED OFF TO THE NEAREST MILLIMETER , UNLESS OTHERWISE NOTED,AND ARE FOR REFERENCE ONLY.
6. ADD SUFFIX "DT" TO ORDER LUGS WITH CRIMP BARREL SEALED AIR TIGHT INSIDE THE TRANSITION.
7. CATALOG #PT6515 ADAPTOR IS REQUIRED TO USE "U" DIES IN Y45 SERIES TOOLS.
8. CATALOG #PUADP-1 ADAPTOR IS REQUIRED TO USE "U" DIES IN Y46 SERIES TOOLS.
9. Y35P3 INDENTOR ADAPTOR REQUIRED FOR "Y34PR" TYPE INDENTORS.
10. FOR USE BY CUSTOMERS THAT HAVE THIS HYPRESS™ .NO NEW HYPRESSES™ ARE BEING PROCESSED.
11. ADD SUFFIX "U" TO ORDER LUGS WITH UNDRILLED TONGUE.

TO ORDER BURNDY® PRODUCTS CALL

UNITED STATES:
1-800-346-4175 (LONDONDERRY, NH)

CANADA:
1-800-361-6975 (QUEBEC)
1-800-387-6487 (ALL OTHER PROVINCES)

FOR PRODUCT INFO: http://www.burndy.com

HYLUG™

ITEM NO: NA

CAT. NO: YA40A-&YA44A-(SEE TABLE)

DRAWN BY:	E.S.K	7/21/72
CHECKER:	S.F.P	8/01/72
DSN APPVL:	R.B	8/02/72
MFG APPVL:	--	--
QA APPVL:	D.VARIO	6/18/95
MKT APPVL:	P.WERTHMAN	6/18/95
PROD FAM:	CM&R COMPRESSION	
PROJECT #:	--	
DOCUMENT TYPE:	Sales	
REL LEVEL:	Released	

SIZE: C

BURNDY

SCALE: 1:1

DRAWING NO: SD073935

REV: BA

SHEET 18 OF 24

REV: PE0200

DRAWING NO. SD073935

REV	DATE	DESCRIPTION	ECO	BY	C'H'K.
BA	2019-08-13 00:00:00 EDT	UPDATED AS PER MARKUP	51953	YR	SS

CATALOG NUMBER <3> <7>	CONDUCTOR SIZE		CONNECTOR DIMENSIONS-LINEAR MEASURE IN,[mm] <5>											INFORMATION
	ALUMINUM	COPPER	STUD SIZE	NO.OF. HOLES	B	C	D	E	∅ K	L	N	O.D	(T)	PLATING
YA42A1	<3>	<3>	1/2	1	2.46 [62]	2.14 [54]	1.36 [35]	--	.56 [14]	5.32 [135]	.63 [16]	1.50 [38]	.39 [10]	TIN <3>
YA42A3	900 kcmil CLASS B CONCENTRIC COMPRESSED COMPACT SIW	600 kcmil CLASS B,C CONCENTRIC COMPRESSED COMPACT	5/8	1	2.46 [62]	2.14 [54]	1.86 [47]	--	.69 [18]	5.82 [148]	.88 [22]	1.50 [38]	.39 [10]	TIN <3>
YA42A4			5/8	1	2.46 [62]	1.62 [41]	1.86 [47]	--	.69 [18]	5.82 [148]	.88 [22]	1.50 [38]	.39 [10]	TIN <3>
YA42A5 <6>			1/2	2	2.46 [62]	1.62 [41]	3.13 [79]	1.75 [44]	.56 [14]	7.09 [180]	.63 [16]	1.50 [38]	.39 [10]	TIN <3>
YA42A7			3/8	2	2.46 [62]	2.14 [54]	2.00 [51]	1.00 [25]	.44 [11]	5.96 [151]	.44 [11]	1.50 [38]	.39 [10]	TIN <3>

COLOR CODE	DIE INFORMATION		BURNDY® INSTALLATION TOOLING (#CRIMPS)								DIELESS (#CRIMPS)		STRIP LENGTH
			MECHANICAL		HYDRAULIC								
	DIE INDEX	TYPE	OUR840	MD6	<11> Y34A <10> Y34B	<10> Y35,Y39 Y750 PAT750	<10> <9> Y46	<10> <8> Y45	Y48BH	Y60	MECHANICAL	HYDRAULIC	
GRAY	303	DIE SET	--	--	--	U42ART (4)	U42ART (4)	U42ART (4)	--	--	--	Y644 (2) PAT644 (2) Y444 (2) PAT444 (2)	2 7/8"
		NEST INDENTOR	--	--	--	--	--	--	--	--			

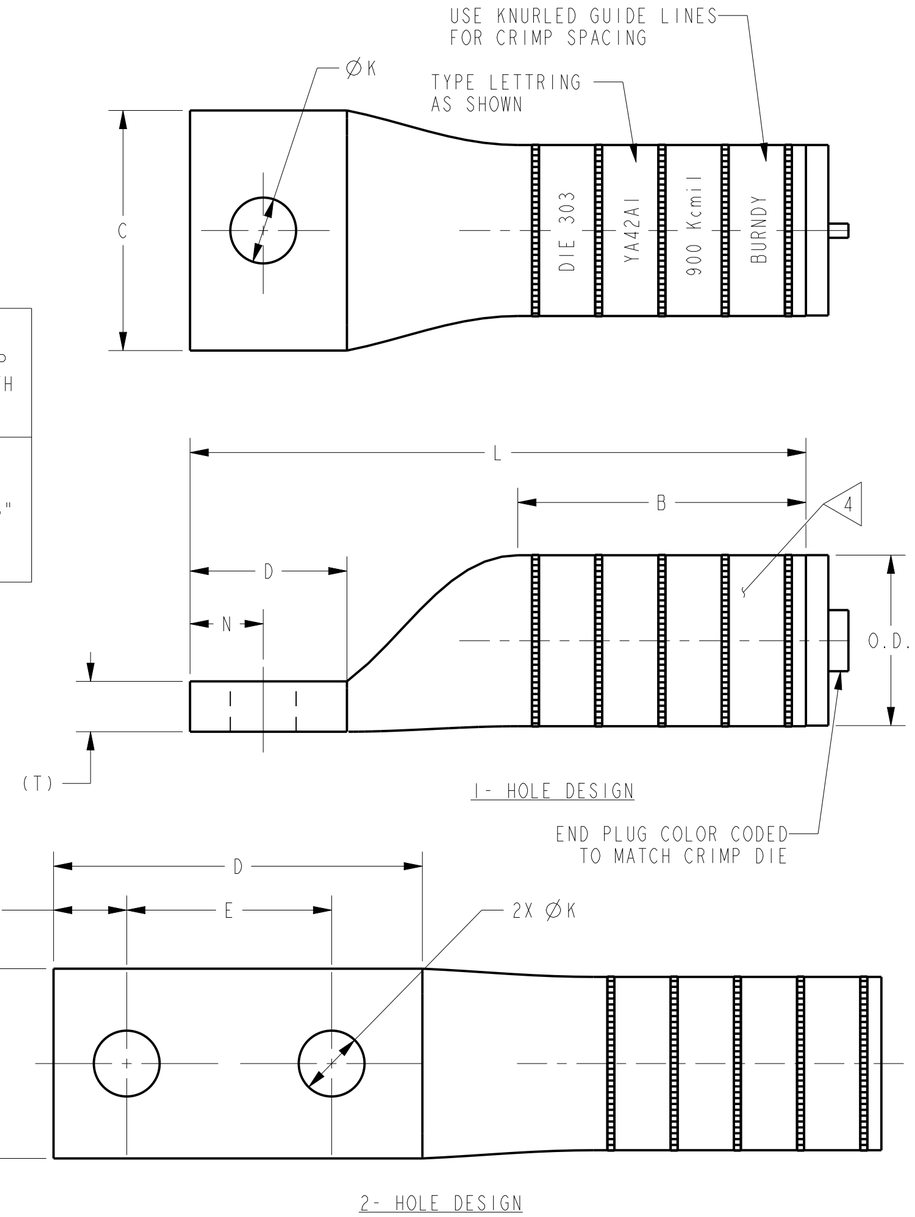

NOTES:

1. ALL HYLUGS™ ACCOMMODATE U.S. STANDARD WASHERS
2. REMOVE ALL EXCESS PENETROX™ FROM CONNECTOR AND ADJACENT CONDUCTOR PRIOR TO TAPING.

<3> UL LISTED AND CSA CERTIFIED WIRE CONNECTORS. RATED 90 C (AL9CU) U42ART DIE IS FOR 900 Kcmil AL ONLY. Y644 TOOL IS FOR 600-900 Kcmil AL OR 600 Kcmil COPPER.

<4> CONNECTOR BARRELS PREFILLED WITH PENETROX™

<5> DIMENSIONS IN BRACKETS [ ] ARE IN MILLIMETERS ROUNDED OFF TO THE NEAREST MILLIMETER , UNLESS OTHERWISE NOTED,AND ARE FOR REFERENCE ONLY.

<6> CAN BE MOUNTED SIDE BY SIDE ON FOUR HOLE NEMA PAD

<7> ADD SUFFIX "DT" TO ORDER LUGS WITH CRIMP BARREL SEALED AIR TIGHT INSIDE THE TRANSITION.

<8> CATALOG #PT6515 ADAPTOR IS REQUIRED TO USE "U" DIES IN Y45 SERIES TOOLS.

<9> CATALOG #PUADP-1 ADAPTOR IS REQUIRED TO USE "U" DIES IN Y46 SERIES TOOLS.

<10> Y35P3 INDENTOR ADAPTOR REQUIRED FOR "Y34PR" TYPE INDENTORS.

<11> FOR USE BY CUSTOMERS THAT HAVE THIS HYPRESS™ . NO NEW HYPRESSES™ ARE BEING PROCESSED.

12 ADD SUFFIX "U" TO ORDER LUGS WITH UNDRILLED TONGUE.

UNINSULATED COMPRESSION TERMINAL
MATERIAL: ALUMINUM TUBE

TO ORDER BURNDY® PRODUCTS CALL

UNITED STATES:
1-800-346-4175 (LONDONDERRY, NH)

CANADA:
1-800-361-6975 (QUEBEC)
1-800-387-6487 (ALL OTHER PROVINCES)

FOR PRODUCT INFO: http://www.burndy.com

HYLUG™

ITEM NO: NA

CAT. NO: YA39A-(SEE TABLE)

DRAWN BY:	E.S.K	7/21/72
CHECKER:	S.F.P	8/01/72
DSN APPVL:	R.B	8/02/72
MFG APPVL:	--	--
QA APPVL:	D.VARIO	6/18/95
MKT APPVL:	P.WERTHMAN	6/18/95
PROD FAM:	CM&R COMPRESSION	
PROJECT #:	--	
DOCUMENT TYPE:	Sales	
REL LEVEL:	Released	

BURNDY

SCALE: 1:1

DRAWING NO	REV
SD073935	BA

SIZE: C

SHEET 19 OF 24

REV: PE0200

DRAWING NO. SD073935

REV	DATE	DESCRIPTION	ECO	BY	C'H'K.
BA	2019-08-13 00:00:00 EDT	UPDATED AS PER MARKUP	51953	YR	SS

CATALOG NUMBER	CONDUCTOR SIZE		CONNECTOR DIMENSIONS-LINEAR MEASURE IN,[mm] <5												INFORMATION
	ALUMINUM	COPPER	STUD SIZE	NO.OF. HOLES	B	C	D	E	F	Ø K	L	N	O.D	(T)	PLATING
YA44A1 <13	1000 kcmil CLASS B CONCENTRIC COMPRESSED COMPACT SIW 750 Kcmil 800 Kcmil CCA DLO (1184/22) (1258/22)	1000 kcmil CLASS B,C CONCENTRIC COMPRESSED COMPACT	5/8	1	2.74 [70]	2.50 [64]	1.89 [48]	--	--	.69 [18]	6.50 [165]	.88 [22]	1.84 [47]	.66 [17]	TIN <3
YA44A2															NONE
YA44A3 <13			1/2	2	2.74 [70]	1.65 [42]	3.15 [80]	1.75 [44]	--	.56 [14]	7.76 [197]	.63 [16]		.55 [14]	TIN <3
YA44A4 <13			1/2			2.50 [64]									NONE
YA44A5 <13			1/2	2	2.74 [70]	1.65 [42]	2.90 [74]	1.50 [38]	--	.56 [14]	7.51 [191]	.63 [16]		.55 [14]	TIN <3
YA44A6 <13			1/2	4	2.74 [70]	3.03 [77]	3.15 [80]	1.75 [44]	1.75 [44]	.56 [14]	7.76 [197]	.63 [16]		.53 [13]	TIN <3
YA44A7 <13			5/8	1	2.74 [70]	1.46 [37]	1.89 [48]	--	--	.69 [18]	6.50 [165]	.88 [22]		.55 [14]	TIN <3
YA44A8 <13			1/2	2	2.74 [70]	2.50 [64]	3.15 [80]	1.75 [44]	--	.56 [14]	7.76 [197]	.63 [16]		.66 [17]	TIN <3
YA44A9 <13			1/2	2(SLOTS)	2.74 [70]	1.65 [42]	3.15 [80]	1.75 [44]	--	(SLOT)	7.76 [197]	.63 [16]		.55 [14]	TIN <3

COLOR CODE	DIE INFORMATION		BURNDY® INSTALLATION TOOLING (#CRIMPS)								DIELESS (#CRIMPS)		STRIP LENGTH
			MECHANICAL		HYDRAULIC								
	DIE INDEX	TYPE	OUR840	MD6	>9 Y34A >10 Y34B	Y35,Y39 Y750 <9 PAT750	>8 >9 Y46	>7 >9 Y45	Y48BH	Y60	MECHANICAL	HYDRAULIC	
BROWN	302	BROWN DIE SET	--	--	--	--	P44ART (4)	S44ART (4)	C44AR (2)	L44ART (2)	--	Y644MBH (1) ONLY Y444 (1) PAT444 (1)	3 1/8"
		NEST INDENTOR	--	--	--	--	NO NEST (2) P48PR-1	--	F46D(2) Y48PR-1	--			

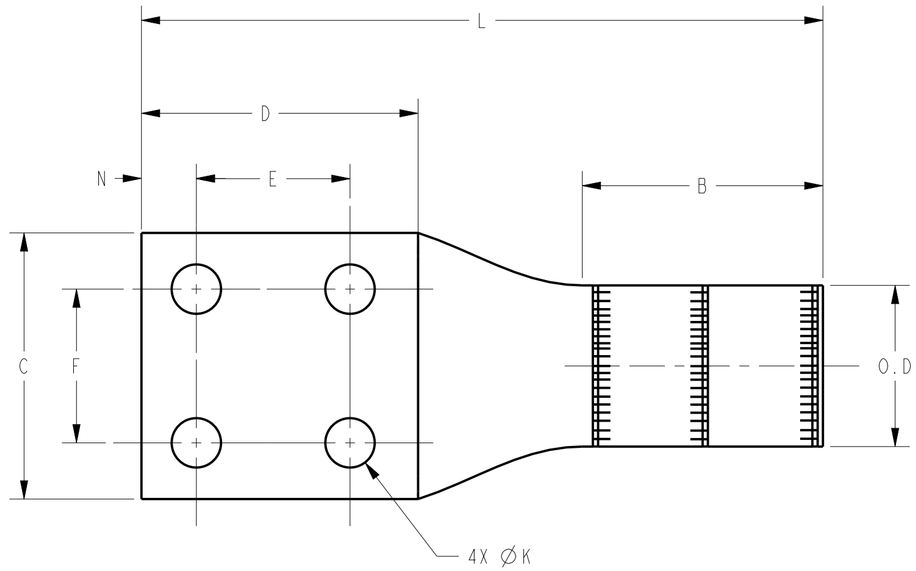

4-HOLE DESIGN

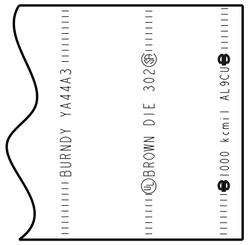

DEVELOPED LETTERING VIEW <13

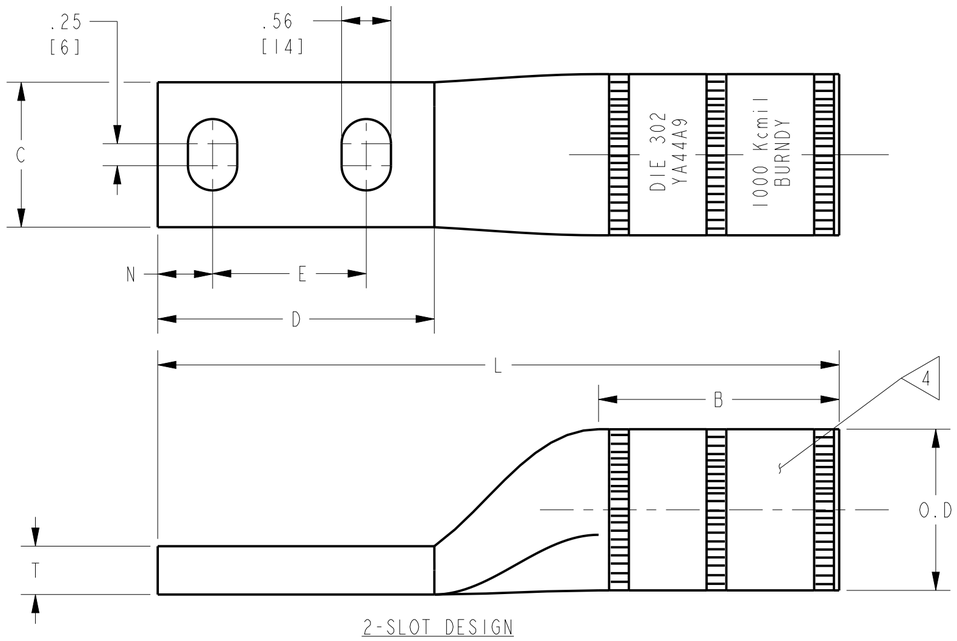

2-SLOT DESIGN

NOTES:

1. ALL HYLUGS™ ACCOMMODATE U.S. STANDARD WASHERS
2. REMOVE ALL EXCESS PENETROX™ FROM CONNECTOR AND ADJACENT CONDUCTOR PRIOR TO TAPING.
3. UL LISTED AND CSA CERTIFIED WIRE CONNECTORS. RATED 90 C (AL9CU) FOR USE WITH COPPER OR ALUMINUM CONDUCTOR. APPROVAL APPLY TO TIN PLATED CONNECTORS ONLY.
4. CONNECTOR BARRELS PREFILLED WITH PENETROX™
5. DIMENSIONS IN BRACKETS [ ] ARE IN MILLIMETERS ROUNDED OFF TO THE NEAREST MILLIMETER , UNLESS OTHERWISE NOTED,AND ARE FOR REFERENCE ONLY.
6. ADD SUFFIX "DT" TO ORDER LUGS WITH CRIMP BARREL SEALED AIR TIGHT INSIDE THE TRANSITION.
7. CATALOG #PT6515 ADAPTOR IS REQUIRED TO USE "U" DIES IN Y45 SERIES TOOLS.
8. CATALOG #PUADP-1 ADAPTOR IS REQUIRED TO USE "U" DIES IN Y46 SERIES TOOLS.
9. Y35P3 INDENTOR ADAPTOR REQUIRED FOR "Y34PR" TYPE INDENTORS.
10. FOR USE BY CUSTOMERS THAT HAVE THIS HYPRESS™ .NO NEW HYPRESSES™ ARE BEING PROCESSED.
11. UL LISTED WITH DLO COPPER CLAD ALUMINUM CONDUCTOR USING Y644MBH AND Y444/PAT444 TOOLS ONLY.
12. ADD SUFFIX "U" TO ORDER LUGS WITH UNDRILLED TONGUE.
13. SEE DEVELOPED LETTERING VIEW FOR THESE CATALOGS.

TO ORDER BURNDY® PRODUCTS CALL

UNITED STATES:
1-800-346-4175 (LONDONDERRY, NH)

CANADA:
1-800-361-6975 (QUEBEC)
1-800-387-6487 (ALL OTHER PROVINCES)

FOR PRODUCT INFO: http://www.burndy.com

HYLUG™

ITEM NO: N/A

CAT. NO: YA44A- (SEE TABLE)

DRAWN BY:	E.S.K	7/21/72
CHECKER:	S.F.P	8/01/72
DSN APPVL:	R.B	8/02/72
MFG APPVL:	--	--
QA APPVL:	D.VARIO	6/18/95
MKT APPVL:	P.WERTHMAN	6/18/95

BURNDY

SCALE: 1:1

PROD FAM: CM&R COMPRESSION

PROJECT #: --

DOCUMENT TYPE: Sales

REL LEVEL: Released

SIZE: C

DRAWING NO: SD073935

REV: BA

SHEET 20 OF 24

REV: PE0200

DRAWING NO.
SD073935

REV	DATE	DESCRIPTION	ECO	BY	C'H'K.
BA	2019-08-13 00:00:00 EDT	UPDATED AS PER MARKUP	51953	YR	SS

CATALOG NUMBER 3 6	CONDUCTOR SIZE ALUMINUM	CONDUCTOR SIZE COPPER	STUD SIZE	NO. OF HOLES	B	C	D	E	F	ØK	L	N	O.D	(T)	INFORMATION PLATING
YA45A1	1250 kcmil CLASS B CONCENTRIC COMPRESSED COMPACT SIW 900 Kcmil 1000 Kcmil CCA DLO (1406/22) (1554/22)	1250 kcmil CLASS B,C CONCENTRIC COMPRESSED COMPACT	1/2	2	3.30 [84]	3.03 [77]	3.12 [79]	1.75 [44]	--	.56 [14]	8.72 [221]	.63 [16]	2.26 [57]	.93 [24]	TIN 3
YA45A2															NONE
YA45A5			1/2		2.74 [70]	2.59 [66]	3.12 [79]	1.75 [44]	--	.56 [14]	7.73 [196]	.63 [16]	1.84 [47]	.51 [13]	TIN 3
YA45A6															NONE
YA45A3			1/2	4	3.30 [84]	3.03 [77]	3.12 [79]	1.75 [44]	1.75 [44]	.56 [14]	8.72 [221]	.63 [16]	2.26 [57]	.93 [24]	TIN 3
YA45A4															NONE
YA45A7			1/2		2.74 [70]	3.03 [77]	3.12 [79]	1.75 [44]	1.75 [44]	.56 [14]	7.73 [196]	.63 [16]	1.84 [47]	.43 [11]	3 TIN
YA45A8															NONE

COLOR CODE	DIE INFORMATION: DIE INDEX	DIE INFORMATION: TYPE	BURNDY® INSTALLATION TOOLING (#CRIMPS) MECHANICAL: OUR840	MECHANICAL: MD6	HYDRAULIC: 10 9 Y34A Y34B	HYDRAULIC: 9 Y35, Y39 Y750 PAT750	HYDRAULIC: 9 8 Y46	HYDRAULIC: 9 7 Y45	HYDRAULIC: Y48BH	HYDRAULIC: Y60	DIELESS (#CRIMPS) MECHANICAL	DIELESS (#CRIMPS) HYDRAULIC	STRIP LENGTH
BROWN	302	BROWN DIE SET	--	--	--	--	P44ART (4)	S44ART (4)	C44AR (2)	L44ART (2)	--	Y644MBH (1) ONLY	3 1/8"
		NEST INDENTOR	--	--	--	--	NO NEST (2) P48PR-1	--	F46D(2) Y48PR-1	--			

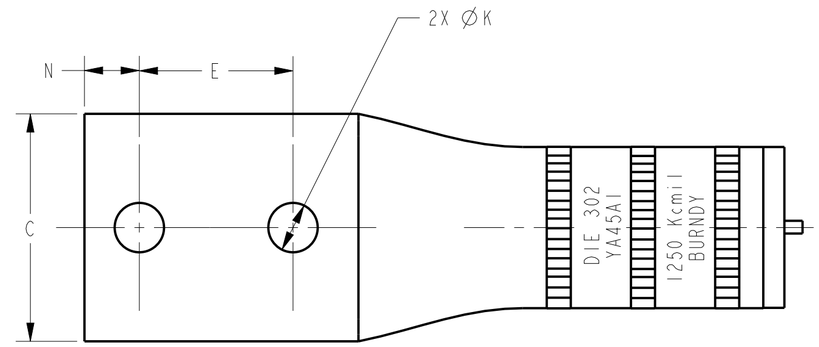

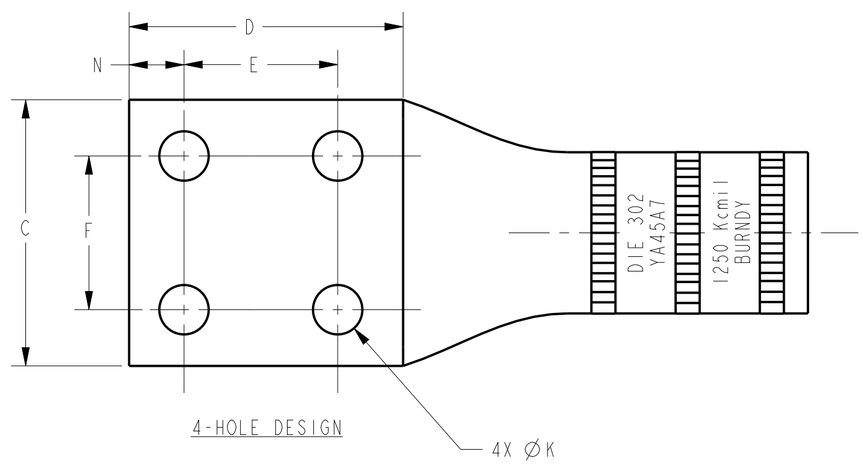

4-HOLE DESIGN

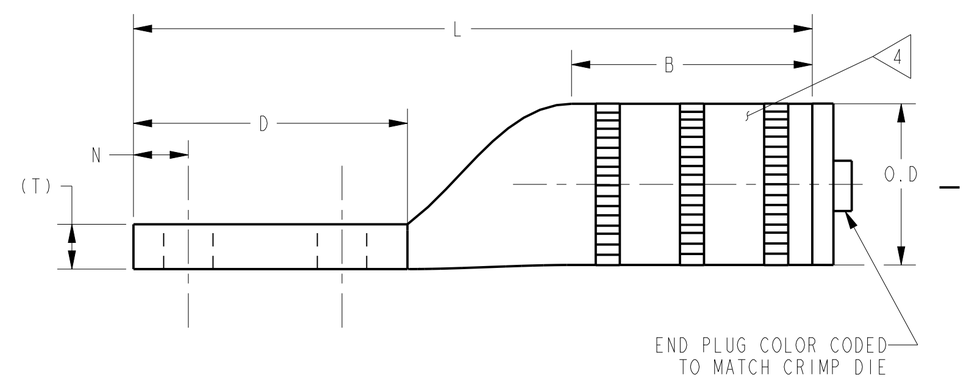

2- HOLE DESIGN

UNINSULATED COMPRESSION TERMINAL
MATERIAL: ALUMINUM TUBE

NOTES:

1. ALL HYLUGS™ ACCOMMODATE U.S. STANDARD WASHERS
2. REMOVE ALL EXCESS PENETROX™ FROM CONNECTOR AND ADJACENT CONDUCTOR PRIOR TO TAPING.
3. UL LISTED AND CSA CERTIFIED WIRE CONNECTORS. RATED 70C (AL7CU) FOR USE WITH COPPER OR ALUMINUM CONDUCTOR. APPROVAL APPLY TO TIN PLATED CONNECTORS ONLY.
4. CONNECTOR BARRELS PREFILLED WITH PENETROX™
5. DIMENSIONS IN BRACKETS [ ] ARE IN MILLIMETERS ROUNDED OFF TO THE NEAREST MILLIMETER , UNLESS OTHERWISE NOTED,AND ARE FOR REFERENCE ONLY.
6. ADD SUFFIX "DT" TO ORDER LUGS WITH CRIMP BARREL SEALED AIR TIGHT INSIDE THE TRANSITION.
7. CATALOG #PT6515 ADAPTOR IS REQUIRED TO USE "U" DIES IN Y45 SERIES TOOLS.
8. CATALOG #PUADP-1 ADAPTOR IS REQUIRED TO USE "U" DIES IN Y46 SERIES TOOLS.
9. Y35P3 INDENTOR ADAPTOR REQUIRED FOR "Y34PR" TYPE INDENTORS.
10. FOR USE BY CUSTOMERS THAT HAVE THIS HYPRESS™ .NO NEW HYPRESSES™ ARE BEING PROCESSED.
11. UL LISTED WITH DLO COPPER CLAD ALUMINUM CONDUCTOR USING Y644MBH AND Y444/PAT44 TOOLS ONLY.
12. ADD SUFFIX "U" TO ORDER LUGS WITH UNDRILLED TONGUE.

TO ORDER BURNDY® PRODUCTS CALL

UNITED STATES:
1-800-346-4175 (LONDONDERRY, NH)

CANADA:
1-800-361-6975 (QUEBEC)
1-800-387-6487 (ALL OTHER PROVINCES)

FOR PRODUCT INFO: http://www.burndy.com

HYLUG™

ITEM NO: NA
CAT. NO: YA45A-(SEE TABLE)

DRAWN BY:	E.S.K	7/21/72
CHECKER:	S.F.P	8/01/72
DSN APPVL:	R.B	8/02/72
MFG APPVL:	--	--
QA APPVL:	D.VARIO	6/18/95
MKT APPVL:	P.WERTHMAN	6/18/95
PROD FAM:	CM&R COMPRESSION	
PROJECT #:	--	
DOCUMENT TYPE:	Sales	
REL LEVEL:	Released	

BURNDY

SCALE: 1:1
SIZE: C
DRAWING NO: SD073935
REV: BA
SHEET 21 OF 24

REV: PE0200

DRAWING NO.
SD073935

REV	DATE	DESCRIPTION	ECO	BY	C'H'K.
BA	2019-08-13 00:00:00 EDT	UPDATED AS PER MARKUP	51953	YR	SS

CATALOG NUMBER ◁3 ◁6	CONDUCTOR SIZE		CONNECTOR DIMENSIONS-LINEAR MEASURE IN,[mm] ◁5												INFORMATION	
	ALUMINUM	COPPER	STUD SIZE	NO.OF. HOLES	B	C	D	E	F	Ø K	L	N	O.D	(T)	PLATING	
YA46A1	1500 Kcmil CLASS B CONCENTRIC COMPRESSED COMPACT SIW	1500 Kcmil CLASS B,C CONCENTRIC COMPRESSED COMPACT	3/4	1	3.30 [84]	3.08 [78]	2.09 [53]	--	--	.81 [21]	7.67 [195]	1.00 [25]	2.26 [57]	.81 [21]	TIN	◁3
YA46A2															NONE	
YA46A3			1/2	2	3.30 [84]	3.08 [78]	3.15 [80]	1.75 [44]	--	.56 [14]	8.73 [222]	.63 [16]		.81 [21]	TIN	◁3
YA46A4															NONE	
YA46A5			1/2	4	3.30 [84]	3.08 [78]	3.15 [80]	1.75 [44]	1.75 [44]	.56 [14]	8.73 [222]	.63 [16]		.81 [21]	TIN	◁3
YA46A6															NONE	

COLOR CODE	DIE INFORMATION		BURNDY® INSTALLATION TOOLING (#CRIMPS)								DIELESS (#CRIMPS)		STRIP LENGTH
			MECHANICAL		HYDRAULIC								
	DIE INDEX	TYPE	OUR840	MD6	◁10 ◁9 Y34A Y34B	◁9 Y35,Y39 Y750 PAT750	◁9 ◁8 Y46	◁9 ◁7 Y45	Y48BH	Y60	MECHANICAL	HYDRAULIC	
BLUE	478	BLUE DIE SET	--	--	--	--	--	--	C46AR (2)	L46ART (2)	--	--	3 3/4"
		NEST INDENTOR	--	--	--	--	--	--	C46AD(2) Y48PR-1	--			

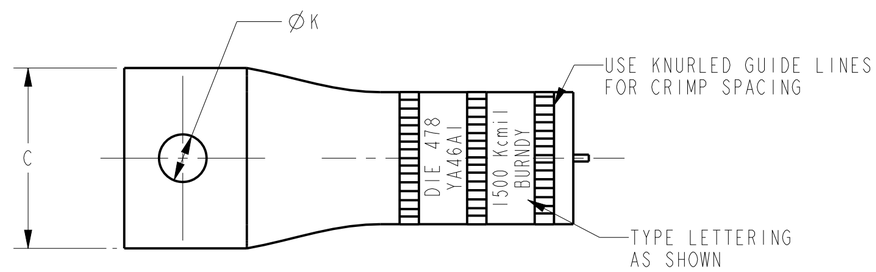

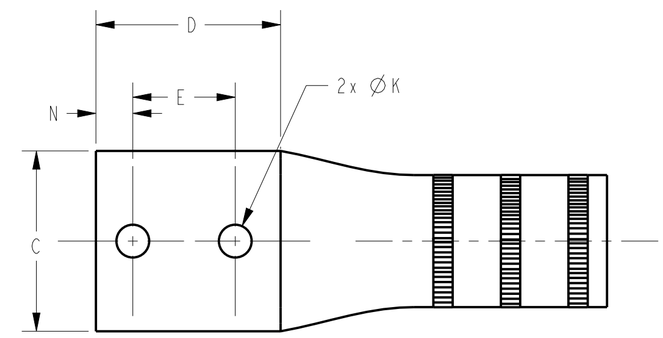

2- HOLE DESIGN

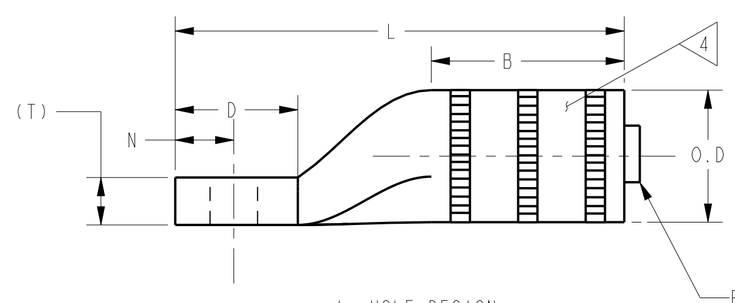

1- HOLE DESIGN

END PLUG COLOR CODED
TO MATCH CRIMP DIE

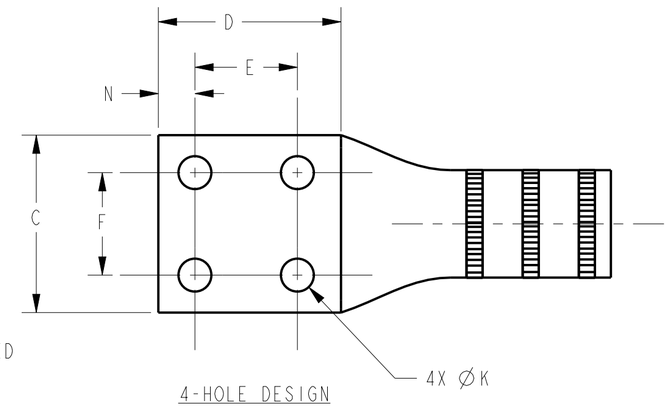

4-HOLE DESIGN

NOTES:

1. ALL HYLUGS™ ACCOMMODATE U.S. STANDARD WASHERS

2. REMOVE ALL EXCESS PENETROX™ FROM CONNECTOR AND ADJACENT CONDUCTOR PRIOR TO TAPING.

3 ▷ UL LISTED AND CSA CERTIFIED WIRE CONNECTORS. RATED 70C (AL7CU) FOR USE WITH COPPER OR ALUMINUM CONDUCTOR. APPROVAL APPLY TO TIN PLATED CONNECTORS ONLY.

4 ▷ CONNECTOR BARRELS PREFILLED WITH PENETROX™

5 ▷ DIMENSIONS IN BRACKETS [ ] ARE IN MILLIMETERS ROUNDED OFF TO THE NEAREST MILLIMETER , UNLESS OTHERWISE NOTED,AND ARE FOR REFERENCE ONLY.

6 ▷ ADD SUFFIX "DT" TO ORDER LUGS WITH CRIMP BARREL SEALED AIR TIGHT INSIDE THE TRANSITION.

7 ▷ CATALOG #PT6515 ADAPTOR IS REQUIRED TO USE "U" DIES IN Y45 SERIES TOOLS.

8 ▷ CATALOG #PUADP-1 ADAPTOR IS REQUIRED TO USE "U" DIES IN Y46 SERIES TOOLS.

9 ▷ Y35P3 INDENTOR ADAPTOR REQUIRED FOR "Y34PR" TYPE INDENTORS.

10 ▷ FOR USE BY CUSTOMERS THAT HAVE THIS HYPRESS™ .NO NEW HYPRESSES™ ARE BEING PROCESSED.

11 ADD SUFFIX "U" TO ORDER LUGS WITH UNDRILLED TONGUE.

UNINSULATED COMPRESSION TERMINAL
MATERIAL: ALUMINUM TUBE

TO ORDER BURNDY® PRODUCTS CALL

UNITED STATES:
1-800-346-4175 (LONDONDERRY, NH)

CANADA:
1-800-361-6975 (QUEBEC)
1-800-387-6487 (ALL OTHER PROVINCES)

FOR PRODUCT INFO: http://www.burndy.com

HYLUG™

ITEM NO: NA

CAT. NO: YA46A-(SEE TABLE)

DRAWN BY:	E.S.K	7/21/72
CHECKER:	S.F.P	8/01/72
DSN APPVL:	R.B	8/02/72
MFG APPVL:	--	--
QA APPVL:	D.VARIO	6/18/95
MKT APPVL:	P.WERTHMAN	6/18/95
PROD FAM:	CM&R COMPRESSION	
PROJECT #:	--	
DOCUMENT TYPE:	Sales	
REL LEVEL:	Released	

BURNDY

SCALE: 1:1

DRAWING NO	REV
SD073935	BA

SIZE: C

SHEET 22 OF 24

REV: PE0200

DRAWING NO. SD073935

REV	DATE	DESCRIPTION	ECO	BY	C'H'K.
BA	2019-08-13 00:00:00 EDT	UPDATED AS PER MARKUP	51953	YR	SS

CATALOG NUMBER <3> <6>	CONDUCTOR SIZE		CONNECTOR DIMENSIONS-LINEAR MEASURE IN,[mm] <5>												INFORMATION	
	ALUMINUM	COPPER	STUD SIZE	NO.OF. HOLES	B	C	D	E	F	ØK	L	N	O.D	(T)	PLATING	
YA47A1	1750 Kcmil CLASS B CONCENTRIC COMPRESSED COMPACT SIW	1750 Kcmil CLASS B,C CONCENTRIC COMPRESSED COMPACT	3/4	1	3.92 [100]	3.32 [84]	2.09 [53]	--	--	.81 [21]	7.51 [191]	1.00 [25]	2.44 [62]	.88 [22]	TIN	<3>
YA47A2															NONE	
YA47A3			1/2	2	3.92 [100]	3.32 [84]	3.14 [80]	1.75 [44]	--	.56 [14]	8.56 [217]	.63 [16]		.88 [22]	TIN	<3>
YA47A4															NONE	
YA47A5			1/2	4	3.92 [100]	3.32 [84]	3.14 [80]	1.75 [44]	1.75 [44]	.56 [14]	8.56 [217]	.63 [16]		.88 [22]	TIN	<3>
YA47A6															NONE	

COLOR CODE	DIE INFORMATION		BURNDY® INSTALLATION TOOLING (#CRIMPS)								DIELESS (#CRIMPS)		STRIP LENGTH
			MECHANICAL		HYDRAULIC								
	DIE INDEX	TYPE	OUR840	MD6	<10> <9> Y34A Y34B	<9> Y35,Y39 Y750 PAT750	<9> <8> Y46	<9> <7> Y45	Y488H	Y60	MECHANICAL	HYDRAULIC	
WHITE	587	WHITE DIE SET	--	--	--	--	--	--	--	L47ART (2)	--	--	4 3/8"
		NEST INDENTOR	--	--	--	--	--	--	--	--			

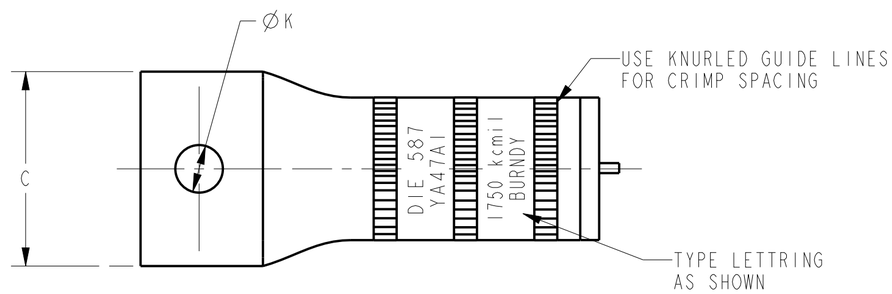

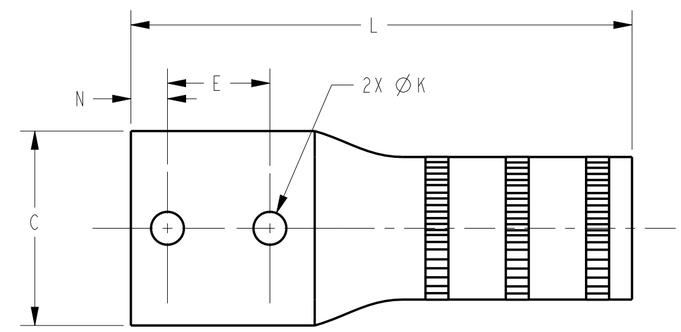

2- HOLE DESIGN

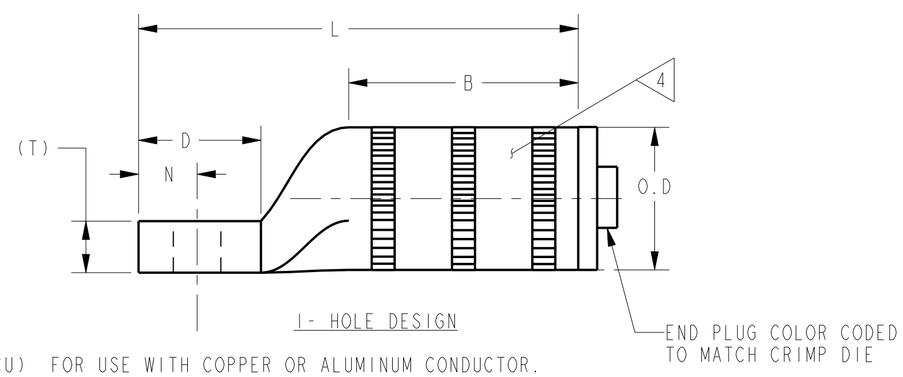

1- HOLE DESIGN

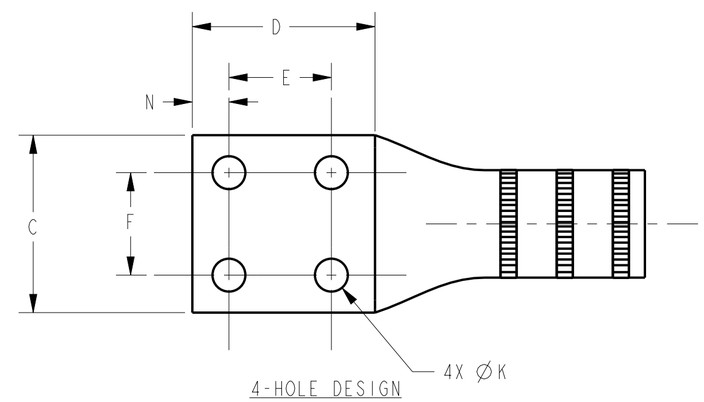

4-HOLE DESIGN

NOTES:

1. ALL HYLUGS™ ACCOMMODATE U.S. STANDARD WASHERS

2. REMOVE ALL EXCESS PENETROX™ FROM CONNECTOR AND ADJACENT CONDUCTOR PRIOR TO TAPING.

<3> UL LISTED AND CSA CERTIFIED WIRE CONNECTORS. RATED 70C (AL7CU) FOR USE WITH COPPER OR ALUMINUM CONDUCTOR. APPROVAL APPLY TO TIN PLATED CONNECTORS ONLY.

<4> CONNECTOR BARRELS PREFILLED WITH PENETROX™

<5> DIMENSIONS IN BRACKETS [ ] ARE IN MILLIMETERS ROUNDED OFF TO THE NEAREST MILLIMETER , UNLESS OTHERWISE NOTED,AND ARE FOR REFERENCE ONLY.

<6> ADD SUFFIX "DT" TO ORDER LUGS WITH CRIMP BARREL SEALED AIR TIGHT INSIDE THE TRANSITION.

<7> CATALOG #PT6515 ADAPTOR IS REQUIRED TO USE "U" DIES IN Y45 SERIES TOOLS.

<8> CATALOG #PUADP-1 ADAPTOR IS REQUIRED TO USE "U" DIES IN Y46 SERIES TOOLS.

<9> Y35P3 INDENTOR ADAPTOR REQUIRED FOR "Y34PR" TYPE INDENTORS.

<10> FOR USE BY CUSTOMERS THAT HAVE THIS HYPRESS™ .NO NEW HYPRESSES™ ARE BEING PROCESSED.

11 ADD SUFFIX "U" TO ORDER LUGS WITH UNDRILLED TONGUE.

UNINSULATED COMPRESSION TERMINAL
MATERIAL: ALUMINUM TUBE

TO ORDER BURNDY® PRODUCTS CALL

UNITED STATES:
1-800-346-4175 (LONDONDERRY, NH)

CANADA:
1-800-361-6975 (QUEBEC)
1-800-387-6487 (ALL OTHER PROVINCES)

FOR PRODUCT INFO: http://www.burndy.com

HYLUG™

ITEM NO: NA

CAT. NO: YA47A-(SEE TABLE)

DRAWN BY:	E.S.K	7/21/72
CHECKER:	S.F.P	8/01/72
DSN APPVL:	R.B	8/02/72
MFG APPVL:	--	--
QA APPVL:	D.VARIO	6/18/95
MKT APPVL:	P.WERTHMAN	6/18/95
PROD FAM:	CM&R COMPRESSION	
PROJECT #:	--	
DOCUMENT TYPE:	Sales	
REL LEVEL:	Released	

BURNDY

SCALE: 1:1

SIZE	DRAWING NO	REV
C	SD073935	BA
	SHEET 23 OF 24	

REV: PE0200

DRAWING NO.
SD073935

REV	DATE	DESCRIPTION	ECO	BY	C'H'K.
BA	2019-08-13 00:00:00 EDT	UPDATED AS PER MARKUP	51953	YR	SS

CATALOG NUMBER <3> <6>	CONDUCTOR SIZE		CONNECTOR DIMENSIONS-LINEAR MEASURE IN,[mm] <5>												INFORMATION	
	ALUMINUM	COPPER	STUD SIZE	NO.OF. HOLES	B	C	D	E	F	ØK	L	N	O.D	(T)	PLATING	
YA48A1	2000 Kcmil CLASS B CONCENTRIC COMPRESSED COMPACT SIW	2000 Kcmil CLASS B,C CONCENTRIC COMPRESSED COMPACT	3/4	1	3.69 [94]	3.57 [91]	2.06 [52]	--	--	.81 [21]	7.44 [189]	1.00 [25]	2.60 [66]	.80 [20]	TIN	<3>
YA48A2															NONE	
YA48A3			1/2	2	3.69 [94]	3.57 [91]	3.11 [79]	1.75 [44]	--	.56 [14]	8.49 [216]	.63 [16]		.90 [23]	TIN	<3>
YA48A4															NONE	
YA48A8			1/2		3.69 [94]	2.60 [66]	3.00 [76]	1.75 [44]	--	.66 [17]	8.40 [213]	.55 [14]		.90 [23]	TIN	<3>
															NONE	
YA48A5			1/2	4	3.69 [94]	3.57 [91]	3.11 [79]	1.75 [44]	1.75 [44]	.56 [14]	8.49 [216]	.63 [16]		.90 [23]	TIN	<3>
YA48A6															NONE	
YA48A10 <7>			--	--	3.69 [94]	3.57 [91]	3.05 [77]	--	--	--	8.49 [216]	--		.90 [23]	NONE	
YA483A1			1/2	2	3.69 [94]	3.63 [92]	3.11 [79]	1.75 [44]	--	.56 [14]	8.49 [216]	.63 [16]		.79 [20]	TIN	<3>
YA483A2															NONE	

COLOR CODE	DIE INFORMATION		BURNDY® INSTALLATION TOOLING (#CRIMPS)								DIELESS (#CRIMPS)		STRIP LENGTH
			MECHANICAL		HYDRAULIC								
	DIE INDEX	TYPE	OUR840	MD6	<11> <10> Y34A Y34B	<10> Y35,Y39 Y750 PAT750	<10> <9> Y46	<10> <8> Y45	Y488H	Y60	MECHANICAL	HYDRAULIC	
RED	479	RED DIE SET	--	--	--	--	--	--	--	L48ART (2)	--	--	4 1/8"
		NEST INDENTOR	--	--	--	--	--	--	--	--			

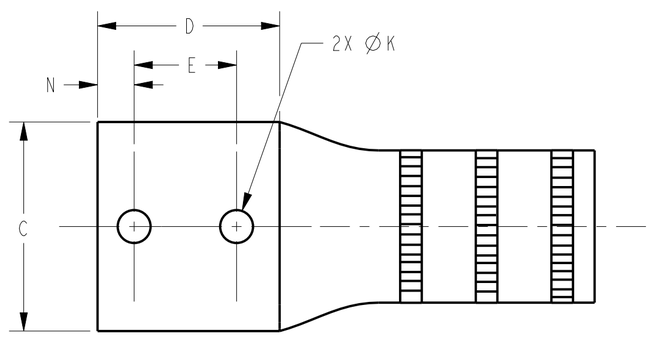

2- HOLE DESIGN

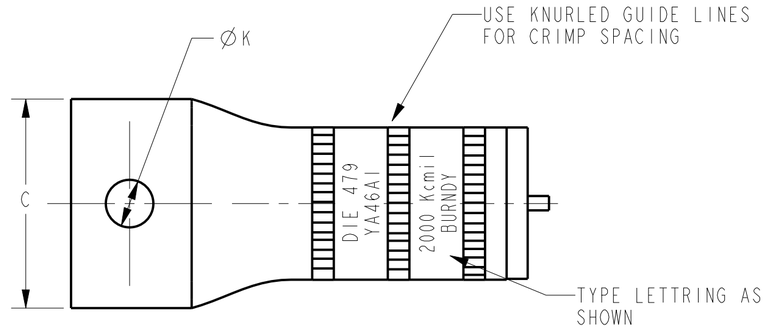

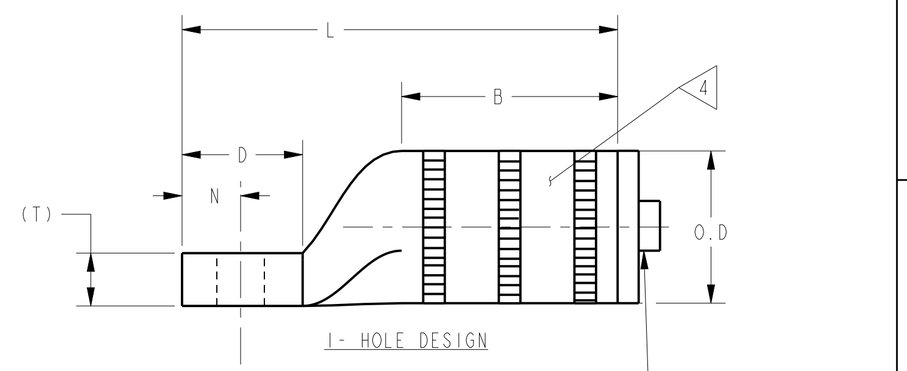

1- HOLE DESIGN

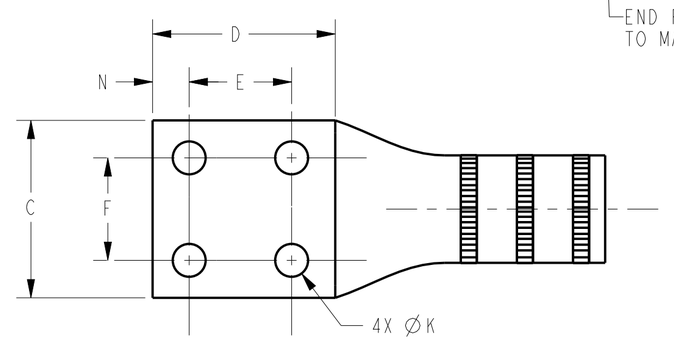

4-HOLE DESIGN

NOTES:

1. ALL HYLUGS™ ACCOMMODATE U.S. STANDARD WASHERS

2. REMOVE ALL EXCESS PENETROX™ FROM CONNECTOR AND ADJACENT CONDUCTOR PRIOR TO TAPING.

<3> UL LISTED AND CSA CERTIFIED WIRE CONNECTORS. RATED 70C (AL7CU) FOR USE WITH COPPER OR ALUMINUM CONDUCTOR. APPROVAL APPLY TO TIN PLATED CONNECTORS ONLY.

<4> CONNECTOR BARRELS PREFILLED WITH PENETROX™

<5> DIMENSIONS IN BRACKETS [ ] ARE IN MILLIMETERS ROUNDED OFF TO THE NEAREST MILLIMETER , UNLESS OTHERWISE NOTED,AND ARE FOR REFERENCE ONLY.

<6> ADD SUFFIX "DT" TO ORDER LUGS WITH CRIMP BARREL SEALED AIR TIGHT INSIDE THE TRANSITION.

<7> THIS CONNECTOR DESIGNED TO BE WELDED TO AN ALUMINIUM BUS AND WILL HAVE A BARE FINISH AND NO PENETROX

<8> CATALOG #PT6515 ADAPTOR IS REQUIRED TO USE "U" DIES IN Y45 SERIES TOOLS.

<9> CATALOG #PUADP-1 ADAPTOR IS REQUIRED TO USE "U" DIES IN Y46 SERIES TOOLS.

<10> Y35P3 INDENTOR ADAPTOR REQUIRED FOR "Y34PR" TYPE INDENTORS.

<11> FOR USE BY CUSTOMERS THAT HAVE THIS HYPRESS™ .NO NEW HYPRESSES™ ARE BEING PROCESSED.

12 ADD SUFFIX "U" TO ORDER LUGS WITH UNDRILLED TONGUE.

UNINSULATED COMPRESSION TERMINAL
MATERIAL: ALUMINUM TUBE

TO ORDER BURNDY® PRODUCTS CALL

UNITED STATES:
1-800-346-4175 (LONDONDERRY, NH)

CANADA:
1-800-361-6975 (QUEBEC)
1-800-387-6487 (ALL OTHER PROVINCES)

FOR PRODUCT INFO: http://www.burndy.com

HYLUG™

ITEM NO: NA

CAT. NO: YA48A-(SEE TABLE)

DRAWN BY:	E.S.K	7/21/72
CHECKER:	S.F.P	8/01/72
DSN APPVL:	R.B	8/02/72
MFG APPVL:	--	--
QA APPVL:	D.VARIO	6/18/95
MKT APPVL:	P.WERTHMAN	6/18/95
PROD FAM:	CM&R COMPRESSION	
PROJECT #:	--	
DOCUMENT TYPE:	Sales	
REL LEVEL:	Released	

BURNDY

SCALE: 1:2

DRAWING NO	REV
SD073935	BA

SIZE: C

SHEET 24 OF 24

REV: PE0200