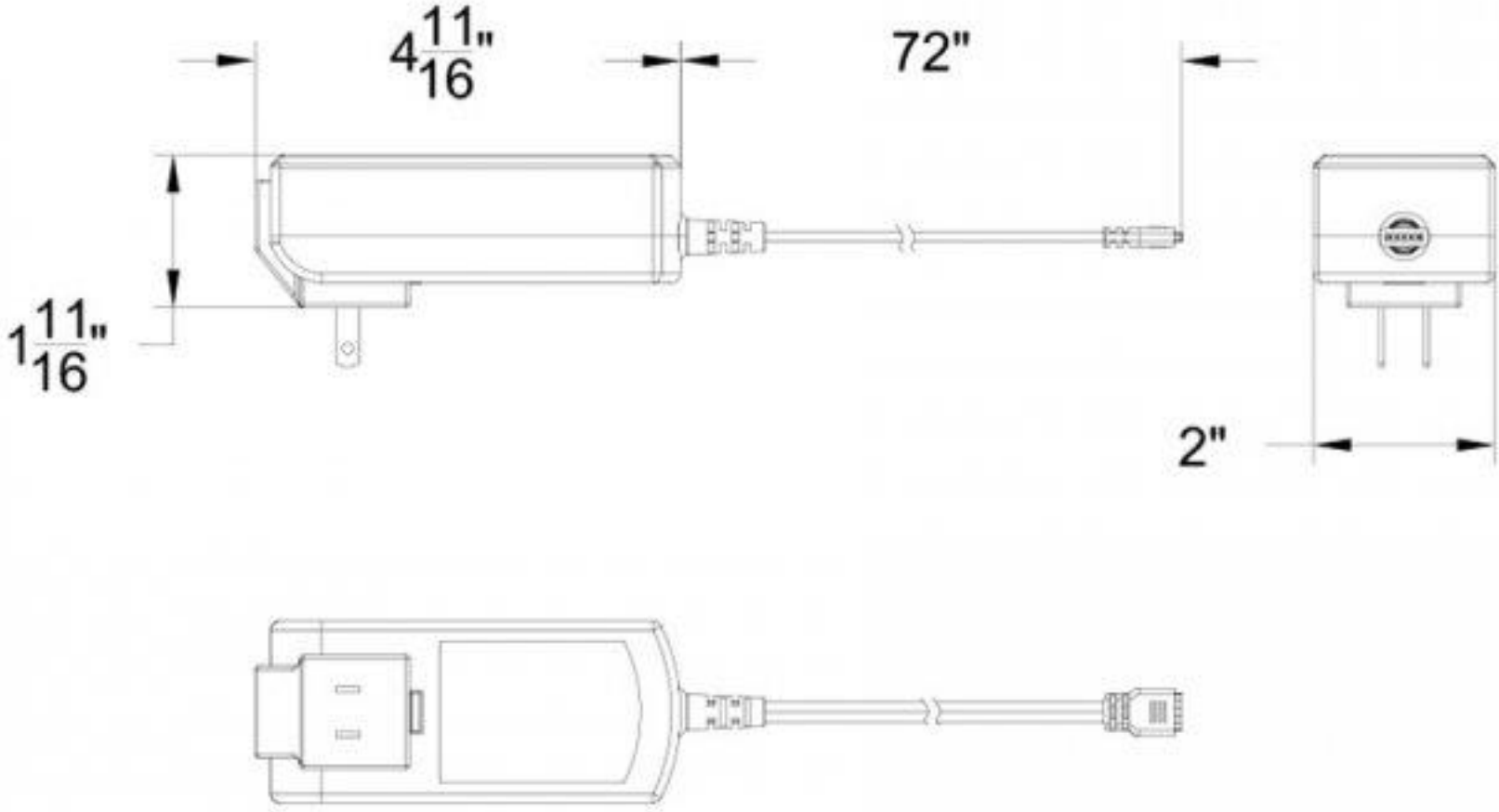

EN-24100-P-AR-T
(without switch)